IMMEDIATE RESPONSE ACTION STATUS REPORT & REMEDIAL MONITORING REPORT

New Bedford High School Substantial Release Migration / Critical Exposure Pathway
230 Hathaway Boulevard
New Bedford, Massachusetts
Release Tracking Number 4-22409

Prepared for:

City of New Bedford
133 William Street
New Bedford, Massachusetts 02740

Prepared by:

TRC Environmental Corporation
Wannalancit Mills
650 Suffolk Street
Lowell, Massachusetts 01854
(978) 970-5600

May 2014

TABLE OF CONTENTS

1.0 INTRODUCTION 1

2.0 BACKGROUND 1

2.1 Release Discovery 1
2.2 Release Reporting 1
2.3 Subsequent Discovery of DNAPL and PCBs 2
2.4 IRA Plan and IRA Plan Modifications 2
2.4.1 Verbally approved IRA activities (January 2010) 2
2.4.2 IRA Plan (March 2010) 3
2.4.3 IRA Plan Modification (January 2011) 3
2.4.4 IRA Plan Modification (February 2012) 4
2.5 Activities Performed Prior to this Reporting Period 4

3.0 IMMEDIATE RESPONSE ACTION STATUS 5

3.1 The Status of Assessment and Remedial Actions 5
3.2 Hydraulic Control and Subslab Venting Systems 5
3.2.1 Routine System Inspections 6
3.2.2 Non-Routine System Maintenance and Scheduled or Unscheduled Downtime 7
3.2.3 Influent & Effluent Monitoring Results 8
3.2.4 Quarterly Discharge Monitoring 9
3.2.5 Emissions Monitoring Results 9
3.2.6 Hydraulic Control and Venting System Operation and Maintenance Summary 10
3.3 Groundwater Sampling 11
3.3.1 Monitoring Well Sampling (Pre-Shutdown - January 2014) 11
3.3.2 Recovery Well Sampling (Pre-Shutdown - February 14, 2014) 11
3.3.3 Groundwater Sampling (Post-Shutdown - February 21, 2014) 12
3.3.4 Evaluation of Pre- and Post-Shutdown Groundwater Results 12
3.4 Supplemental Soil Investigations 13
3.4.1 February 2014 Soil Investigation 13
3.4.2 April 2014 Soil Investigation 14
3.5 Management of Investigation or Remediation Waste 14
3.6 MassDEP-Required Information 15
3.7 LSP Opinion 15

4.0 REFERENCES 17

TABLES

Table 1: Summary of Analytical Results for Aqueous Seep Samples (December 2009 through January 2013)
Table 2: Summary of Analytical Results for Groundwater Samples (2008 through 2014)
Table 3: Summary of Hydraulic Control System Results for Water Samples (2012 through 2014)
Table 4: Summary of Analytical Results for Quarterly Discharge Monitoring Samples (2012 through 2014)
Table 5: Summary of Subslab Vapor Mitigation System Emission Results (2012 through 2014)
Table 6: Summary of Analytical Results for Soil Samples (2012 through 2014)

FIGURES

Figure 1: Site Aerial Photograph
Figure 2: Site Plan with Sampling Locations
Figure 3: Process and Instrumentation Diagram
Figure 4: Mechanical Room Soil PCB Results Summary Map

APPENDICES

Appendix A: Hydraulic Control System Operation, Maintenance & Monitoring Logs
Appendix B: Laboratory Data Reports
Appendix C: Groundwater Sampling Forms and Soil Boring Logs
Appendix D: Copies of Uniform Hazardous Waste Manifests

1.0 INTRODUCTION

TRC Environmental Corporation (TRC) is submitting this Immediate Response Action Status Report (IRA Status Report) to the Massachusetts Department of Environmental Protection (MassDEP) on behalf of the City of New Bedford (City) through the City's Department of Environmental Stewardship and per the Massachusetts Contingency Plan (MCP; 310 CMR 40.0000). This IRA Status Report addresses a Condition of Substantial Release Migration (SRM) at the New Bedford High School (NBHS) campus located at 230 Hathaway Boulevard in New Bedford, Massachusetts (the "Site") as defined under 310 CMR 40.0006 of the MCP. The City reported the condition to MassDEP per 310 CMR 40.0313(5) and 310 CMR 40.0412(2) via telephone with TRC on January 29, 2010 at approximately 11:05 AM. MassDEP verbally approved IRA assessment and mitigation activities at the Site, and assigned Release Tracking Number (RTN) 4-22409. An IRA Plan was submitted by the City to MassDEP on March 22, 2010 (TRC, 2010a). The location of the Site is shown on Figure 1.

On April 17, 2014, the City submitted a Tier Classification to MassDEP for RTN 4-22409. The Tier Classification, which included a summary of compliance history and a Conceptual Phase II Scope of Work, was submitted consistent with the proposed amendments to the MCP (310 CMR 40.0510).[1] RTN 4-22409 was given a Tier I Classification consistent with the criteria provided in 310 CMR 40.0520(2) of the revised MCP.

This IRA Status Report is organized as follows: Section 1 (Background) briefly summarizes information on TRC's involvement with the Site, the circumstances of the release, and the response actions conducted at the Site under MassDEP approval. Section 2 (IRA Status Report) provides the contents of an IRA Status Report as set forth under the MCP, specifically 310 CMR 40.0425. Section 3 (References) lists information sources relied upon in the preparation of this IRA Status Report.

[1] Final amendments were published on April 25, 2014 with an effective date of June 20, 2014. The City received concurrence from MassDEP to submit the Tier Classification consistent with the proposed amendments in advance of the final published and effective dates.

2.0 BACKGROUND

The SRM condition was discovered during investigation of water pooled on the lower floors of the Mechanical Room (B-114) of the NBHS building. Several samples of the water present, which appeared to have seeped through cracks or seams in the floor, were collected and submitted for laboratory analysis. Analytical results for these samples suggested the potential for chlorinated volatile organic compounds (VOCs) to be present in indoor air in the building, which led to the reporting condition and the initiation of IRA assessment activities.

2.1 Release Discovery

A detailed description of the release discovery in the Mechanical Room of the NBHS building is presented in the IRA Plan submitted to MassDEP on March 22, 2010 (TRC, 2010a) and subsequent IRA Status Reports and IRA Plan Modifications associated with RTN 4-22409 as referenced in Section III. A brief summary is provided herein.

On December 2, 2009, aqueous samples were collected from four locations (BRM-S-1 through BRM-S-3 and FIP-S-1) where water was present on the lower floor of the Mechanical Room of the NBHS building (see Figure 2). The water appeared to have seeped through cracks and seams in the lower concrete floor. The detected concentration of vinyl chloride (VC) in seep sample BRM-S-3 (2.1 micrograms per liter; µg/L) was greater than the MCP Method 1 GW-2 groundwater standard of 2 µg/L (see Table 1).

To verify the presence of VC, additional samples of the water were collected for VOC analysis on January 7, 2010. As indicated in Table 1, chlorinated VOCs were not detected in two out of the four samples (BRM-S-1 and BRM-S-2). Chlorinated VOCs were detected in sample BRM-S-3 (chlorobenzene, 1,3-dichlorobenzene [1,3-DCB], 1,4-dichlorobenzene [1,4-DCB], cis-1,2-dichloroethylene [cis-1,2-DCE], trans-1,2-dichloroethylene [trans-1,2-DCE], trichloroethylene [TCE] and VC) and sample FIP-S-1 (cis-1,2-DCE and trans-1,2-DCE).

On January 6 and 7, 2010, groundwater samples were collected from monitoring wells MW-4 through MW-7 at the Site (see Figure 2). Chlorinated VOCs were detected in groundwater samples from two of the monitoring wells (MW-5 located in the Boiler Room adjacent to the Mechanical Room, and MW-7 located in front of NBHS near the flagpole). The concentrations of PCE and VC in the sample from MW-7 were above their respective MCP Method 1 GW-2 groundwater standards (see Table 2).

In parallel with the aforementioned investigation activities, the City evaluated building structural features that might influence fate and transport in the groundwater beneath the NBHS building (as well as the investigative approach), the results of which have been provided in previous status reports.

2.2 Release Reporting

On January 28, 2010 at approximately 3:30 PM, TRC advised the City's Department of

Environmental Stewardship that the seep and impacted water and the underdrain system represented two potential SRM conditions as defined in 310 CMR 40.0006:

- Releases to the groundwater that have migrated or are expected to migrate more than 200 feet per year; or
- Releases to the groundwater or to the vadose zone that have resulted or are within one year likely to result in the discharge of vapors into school buildings or occupied residential dwellings.

Either of these conditions constituted a 72-hour regulatory reporting obligation to the MassDEP in accordance with 310 CMR 40.0313(5).

The SRM conditions described above were reported by the City to the MassDEP via telephone on January 29, 2010 at approximately 11:05 AM. MassDEP verbally approved IRA activities at the Site and assigned RTN 4-22409.

2.3 Subsequent Discovery of DNAPL and PCBs

Initially, this release (RTN 4-22409) was characterized by the presence of chlorinated VOCs in groundwater and potentially indoor air. Subsequent investigations in 2010 and 2011 identified the presence of localized dense non-aqueous phase liquid (DNAPL) beneath the floor of the Mechanical Room and the presence of PCBs within the DNAPL and in nearby soils. Recent actions performed under this IRA have been designed to assess and/or mitigate the DNAPL and PCB contamination in addition to the chlorinated VOCs.

On August 30, 2010, TRC observed small globules of DNAPL during development of newly-installed well MW-27. A sample of the DNAPL was collected for laboratory VOC analysis. The analytical results indicated that TCE was present in the DNAPL.

On August 2, 2011 the City was notified that groundwater shipped for disposal at United Industrial Services of Meriden, Connecticut contained PCBs at a concentration of 160 parts per million (ppm). The City notified MassDEP and the United States Environmental Protection Agency (EPA) Region 1 PCB Coordinator of this information via telephone with TRC on August 2, 2011. PCBs were later found to represent approximately 25-percent of the DNAPL and to be present in soils beneath the Mechanical Room floor.

2.4 IRA Plan and IRA Plan Modifications

The approved IRA Plan is comprised of the initial verbally approved IRA Plan as amended by the written IRA Plan (TRC, 2010a), and the two IRA Plan Modifications (TRC, 2011a and TRC, 2012a).

2.4.1 Verbally approved IRA activities (January 2010)

The initial IRA Plan was authorized by MassDEP at the time the release was reported on January

29, 2010 and consisted of the following:

- Monitoring of indoor air locations, including the Mechanical Room, for VOCs with expedited analysis. Recognizing that indoor air in the Mechanical Room may reflect materials stored in this area, MassDEP suggested taking an inventory of chemicals stored at the NBHS building, relocation of indoor chemical sources, and ventilation of the Mechanical Room prior to re-sampling in this area;
- Re-sampling of aqueous seeps in the Mechanical Room floor; and
- Sealing of the floor seeps.

2.4.2 IRA Plan (March 2010)

The written IRA Plan submitted in March 2010 (TRC, 2010a) identified the following activities:

- Characterization of indoor air;
- Additional characterization of subslab soil vapors;
- Additional characterization of groundwater from new and existing monitoring wells located in and around the NBHS building;
- Additional evaluation of the storm sewer system on the NBHS campus;
- Additional evaluation of the sanitary sewer system on the NBHS campus;
- Additional evaluation of the air handling systems, foundation cracks, floor drains, sink drains and other annular spaces;
- Evaluation of the CEP and implementation of CEP mitigation measures, where warranted;
- Removal of interior sources to evaluate potential contributions to indoor air readings if appropriate; and
- Sealing of drains and cracks.

2.4.3 IRA Plan Modification (January 2011)

The January 2011 IRA Plan Modification (TRC, 2011a) added removal and off-site disposal of chlorinated VOC-impacted groundwater in the vicinity of monitoring well MW-27 to the previously approved IRA activities. Groundwater removal was performed using a vacuum truck during short-term pumping events (Total Fluid Extraction [TFE]) at monitoring well MW-27R, and post-extraction groundwater samples were subsequently collected in accordance with EPA Region 1 low-flow sampling techniques.

On February 23, 2011, MassDEP issued an approval of the IRA Plan Modification. A copy of the approval letter is included in the IRA Status Report submitted to MassDEP on May 31, 2011 (TRC, 2011b).

2.4.4 IRA Plan Modification (February 2012)

The second IRA Plan Modification (TRC, 2012a) described additional activities to further investigate and control migration of chlorinated VOC-impacts in the vicinity of MW-27R. The modifications included installation, operation and maintenance of a hydraulic control system in the Mechanical Room and additional investigation of subsurface impacts in the area using a Membrane Interface Probe System (MIPS). MassDEP provided verbal approval of the IRA Plan Modification on March 15, 2012.

2.5 Activities Performed Prior to this Reporting Period

The results of IRA investigation, impact removal and mitigation activities conducted prior to this IRA Status Report are detailed in the IRA-related plans, modifications and status reports referenced in Section III. Analytical results obtained during previous IRA activities are summarized in the tables included with this report. The prior work has included but is not limited to the following:

- Evaluation of the CEP and implementation of CEP mitigation measures, where warranted;
- Investigation of soil vapors and indoor air;
- Evaluation of aqueous seeps;
- Evaluation of a potential Imminent Hazard condition associated with the seeps;
- Assessment of soils in the vicinity of the Mechanical Room;
- Investigation of subsurface impacts using a MIPS;
- Evaluation of groundwater conditions via new and existing monitoring wells located inside and around the NBHS building;
- Analysis of the DNAPL encountered below the Mechanical Room;
- Assessment of potential leaks into or out of the storm sewer and sanitary sewer systems at the Site;
- Evaluation of the air handling systems, foundation cracks, floor drains, sink drains and other annular spaces in the building;
- Sealing of drains and cracks using Contite® penetrating mortar;
- TFE groundwater removal events at recovery well MW-27R;
- Installation and operation of a groundwater pump and treat system at recovery wells MW-27R and MW-42R to control migration of and remove contaminants from groundwater; and
- Installation and operation of a subslab venting system to prevent vapor migration to the Mechanical Room.

3.0 IMMEDIATE RESPONSE ACTION STATUS

This IRA Status Report provides the information set forth under 310 CMR 40.0425(3)(a) through (e) of the MCP for the reporting period of October 16, 2013 through April 21, 2014.

3.1 The Status of Assessment and Remedial Actions

During the reporting period, the City has continued implementation of activities under the second IRA Plan Modification (TRC, 2012a) and conducted supplemental investigatory sampling. Work performed during the reporting period has included:

- Operation and maintenance of the hydraulic control and subslab venting systems;
- Groundwater sampling and analysis; and
- Soil sampling and analysis.

New information associated with these activities is provided below in Sections 3.2 through 3.5.

Evaluation and implementation of select mitigation measures (e.g., seep mitigation) are ongoing. The previous application of the Contite® penetrating mortar, which was successful in eliminating seepage throughout a large portion of the Mechanical Room, combined with drawdown of the groundwater table associated with the current hydraulic control system have thus far made additional crack sealing activities unnecessary. Although the seepage has significantly attenuated, seepage is observed periodically within the chiller deck and former incinerator pit. The results of previous analyses of continuing seeps do not indicate the presence of compounds of concerns; however, the chiller deck, former incinerator pit and the locations of previous seeps will continue to be observed and noted.

3.2 Hydraulic Control and Subslab Venting Systems

The hydraulic control system utilizes pumping to control migration of impacted groundwater. The extracted groundwater is treated, then discharged to the municipal sewer system. The current process and instrumentation diagram for the hydraulic control system is provided as Figure 3.

Groundwater is discharged to the municipal sewer system under a discharge permit obtained from the City's Department of Public Infrastructure (DPI). The permit was effective on April 1, 2012 and, with a March 2013 extension, is scheduled to expire on April 1, 2015. Copies of the original permit and permit addendum were provided in the IRA Status Reports dated November 28, 2012 (TRC, 2012c) and May 28, 2013 (TRC, 2013), respectively.

Groundwater is pumped from recovery wells MW-27R and MW-42R using individual above-grade centrifugal pumps to two 500-gallon capacity accumulation/settling tanks. These tanks provide separation/removal of particulates and potential non-aqueous phase liquids and allow break-up of oil emulsions. Recovered groundwater is then pumped through two bag filters equipped with oil absorbing 5-micron filter bags to remove oil and provide filtration of

particulate (the second bag filter was increased from 1 micron to 5 microns in May 2013 in an effort to reduce the frequency of bag filter replacement and still maintain a suitable level of system performance). Bag Filter No. 2 discharges to three carbon filtration vessels, each with 300-pounds (lbs.) of granular activated carbon (see Figure 3).

The hydraulic control system equipment is installed in the former incinerator pit inside the Mechanical Room, adjacent to the recovery wells. Recovery wells MW-27R and MW-42R each have maximum yields in the range of approximately 1 to 2 gallons per minute (gpm). The hydraulic control treatment system is designed to accommodate as much as 10 gpm. The design flow rate for the system is based on hydraulic calculations by TRC (see Appendix A of the IRA Plan Modification [TRC, 2012a]).

Sub-slab vapors in the vicinity of the recovery wells are collected to mitigate potential migration of impacted vapors to the dewatered underdrain system. A vacuum blower is used to extract vapor from MW-27R through the exposed (i.e., above the water table) portion of the well screen. The extracted vapors then pass through two 200-lb. vapor-phase carbon vessels installed immediately downstream of the blower to remove organic contaminants from the exhaust stream. The treated vapors are then discharged to an exhaust stack that previously served the former incinerator. The vapor collection and treatment configuration is depicted on the same process and instrumentation diagram as the hydraulic control system (Figure 3).

3.2.1 *Routine System Inspections*

Routine hydraulic control system inspections were performed weekly during the first month of operation, and then decreased to a biweekly basis. Following MassDEP approval in October 2012, the inspection frequency was reduced to monthly. During this reporting period, the monthly system inspections were performed on the following dates:

- Week 86 – November 15, 2013
- Week 91 – December 17, 2013
- Week 95 – January 16, 2014
- Week 99 – February 14, 2014
- Week 104 – March 18, 2014
- Week 110 – April 21, 2014

Inspections by a Grade 2 certified treatment plant operator have been conducted every three months (in December 2013 and March 2014) during this reporting period. Inspections not performed by the certified plant operator have been performed by other qualified TRC personnel in coordination with the certified treatment plant operator.

A routine inspection of the hydraulic control system includes a set of maintenance procedures, system measurements, and collection of aqueous and vapor samples. System operation and maintenance logs from this reporting period are included as Appendix A. Refer to Figure 3 for the locations of sample ports (SP), pressure gauges (PG), valves (V), and vapor sample ports (VSP). Operation and maintenance procedures generally include the following:

- Check holding tanks and measure turbidity and liquid level;
- Check air filter for possible clogging;
- Check fault controls to verify proper operation;
- Check bag filters and change them out if necessary;
- Record total flow since system startup (FM-1);
- Record temperature (Ambient and T-1);
- Record valve positions (PG-1 through PG-5, V-2/V-4, V-5) and adjust if necessary;
- Record pressure at various gauges throughout the system (PG-1 through PG-8);
- Measure turbidity of water at designated sample locations (Influent Tank-1, SP-2, SP-4, SP-5, SP-6 and SP-7);
- Measure vapor concentrations with a PID at designated sample locations (Influent Tank-1, SP-1 [MW-27R], SP-2, SP-4 or SP-5, SP-6, SP-7, and SP-8 [MW-42R]);
- Measure vacuum at designated locations in the vapor system (VG-1, VG-2 and PG-9); and
- Gauge depth to water in selected wells (MW-27D, MW-31, MW-32 and MW-40).

Influent and effluent water samples are collected in conjunction with monthly system inspections, and pre-carbon vessel and intra-carbon vessel aqueous samples have been collected in conjunction with selected system inspections. Vapor inlet and emission samples continue to be collected on a monthly basis.

3.2.2 *Non-Routine System Maintenance and Scheduled or Unscheduled Downtime*

An auto-dialer is utilized to provide remote notification to the system operator of non-routine conditions that might require unscheduled system maintenance and/or might result in system downtime. Non-routine maintenance and repair activities during this reporting period accounted for 111 hours of downtime and included:

- November 10, 2013 – System downtime was registered as a result of a power outage at the NBHS building for a period of approximately 12 hours. The power outage resulted from the connection of a newly installed solar array to the existing electrical infrastructure.
- December 12, 2013 – A system fault was registered resulting in non-routine system maintenance. The system was brought back online following completion of pump replacement activities. A total of approximately 99 hours of downtime was associated with this event.

Downtime resulting from multiple scheduled maintenance events between October 16, 2013 and April 21, 2014 is estimated to be approximately 172 hours. The scheduled maintenance and repair activities during this reporting period include:

- January 16, 2014 – Back-flush and bag filter change out due to high pressure. This was conducted concurrent with the monthly system maintenance activities. There was minor downtime (an estimated one hour) associated with this event.
- February 14, 2014 – The system was shut down for a period of approximately one week between February 14 and 21, 2014 (during school vacation) to assess the potential for VOC concentrations in groundwater to rebound. A total of approximately 170 hours of planned downtime was associated with this event.
- March 18, 2014 – System maintenance included bag filter change out and cleaning of pump floats to improve treatment efficiency and backpressure characteristics. System downtime associated with this event is estimated to be approximately one hour.

The system was fully functional for approximately 177 of the possible 188 days of operation between the October 15, 2013 maintenance event and the April 21, 2014 maintenance event, representing approximately 94% of the reporting period.

3.2.3 Influent & Effluent Monitoring Results

The hydraulic control system monitoring samples have been submitted to Alpha Analytical Laboratories of Westborough, Massachusetts (Alpha) for analysis of VOCs (SW-846 Method 8260B) and PCBs (SW-846 Method 8082). Analytical results for samples collected during the reporting period are discussed below and summarized in Table 3. The laboratory reports are included in Appendix B.

System influent samples collected through April 2014 have exhibited concentrations of VOCs, as shown in Table 3.

Consistent with other recent monitoring events, total PCBs were detected in each of the unfiltered influent samples collected during this reporting period at concentrations ranging from 25.5 to 88.5 µg/L. Influent samples collected during the reporting period also underwent laboratory filtration (0.2 micron filter), with reported concentrations ranging from non-detect (less than 0.250 µg/L) to 1.45 µg/L (see Table 3). The filtered sample results continue to indicate that the detected PCB concentrations are largely related to colloids or particulates in the groundwater rather than dissolved-phase PCBs.

Unfiltered and filtered (0.2 micron filter) influent samples were also analyzed for total petroleum hydrocarbons (TPH). Unfiltered TPH concentrations during the reporting period ranged from 226 to 464 µg/L. Consistent with previous sampling events, TPH was not detected above the laboratory reporting limit (200 µg/L) in the filtered samples. The samples collected during the March 2014 sampling event were not submitted for TPH analysis.

An intra-carbon (sample port SP-6) sample was collected for unfiltered PCB analysis in November 2013. PCBs were not detected above the laboratory reporting limit (0.250 µg/L) in the intra-carbon sample (see Table 3).

During the reporting period, effluent samples exhibited detectable concentrations of cis-1,2-DCE (ranging from 100 to 280 µg/L) and trans-1,2-DCE (ranging from 8.6 to 26 µg/L) as indicated in Table 3. Tetrahydrofuran was detected in February 2014 at a concentration of 8.8 µg/L. VC, which adsorbs weakly to activated carbon, has not been detected above the laboratory reporting limits since the June 2013 sampling event.

3.2.4 Quarterly Discharge Monitoring

Treated groundwater is discharged to the municipal sanitary sewer system via a floor drain located in the former incinerator pit in accordance with the Industrial Discharge Permit (#S-123) obtained by TRC from the City's DPI. The permit is valid through April 1, 2015.

The Industrial Discharge Permit contains reporting and self-monitoring conditions that include the collection of discharge samples on a quarterly basis[2]. Quarterly discharge monitoring sampling events were conducted by TRC on behalf of the City on December 18, 2013 and March 17, 2014 per the permit requirements and the sampling, preservation, handling and analytical methods specified in 40 CFR § 136.

Aqueous discharge samples were collected during each quarterly event to be representative of daily hydraulic control system operations. Individual discrete samples are collected for pH (EPA Method 150.1) and Oil & Grease (EPA Method 1664A) analysis. Time-proportioned Biological Oxygen Demand (BOD; Method SM 5210B), Total Suspended Solids (TSS; Method SM 2540D), and PCB (EPA Method 608) samples are collected and composited in the field. Individually preserved sample aliquots were collected for VOC analysis during each event and submitted to Alpha for time-proportioned compositing per EPA Method 5030. Analytical results are summarized in Table 4 and the laboratory reports are included in Appendix B.

Based on the results of the December 2013 and March 2014 quarterly self-monitoring events and consistent with the IRA-related monitoring activities since system startup, the discharge permit pretreatment standards are being met. No additional operation and maintenance and/or additional pretreatment efforts have been required to date to meet the requirements of the permit.

3.2.5 Emissions Monitoring Results

Venting system emission samples are collected on a monthly basis. During the reporting period, the emission samples were submitted to Alpha for analysis of VOCs (Method TO-15) and Pace Analytical of Schenectady, New York (Pace) or Alpha for analysis of PCBs (Method TO-10A/8082). Analytical results are included in Table 5 and the laboratory reports are included in Appendix B.

For each of the vapor inlet sampling events during this reporting period, the analytical results have indicated concentrations of VOCs (acetone, 2-butanone and/or toluene) and PCB Aroclors.

[2] As previously described in the IRA Status Report submitted to MassDEP in November 2012, the permit conditions were revised on July 2, 2012 (see Appendix B of the IRA Status Report dated November 28, 2012).

Additional VOCs (benzene, cis-1,2-DCE, 1,3-DCB, 1,4-DCB, ethylbenzene, naphthalene, TCE, trans-1,2-DCE, VC and/or xylenes) were also detected in select vapor inlet samples during the reporting period (Table 5).

Several VOCs (chloroform, 1,2-DCA, trans-1,2-DCE, toluene, VC and xylenes) were consistently detected in the vapor discharge samples collected during the reporting period (see Table 5). PCB Aroclors were not detected in the vapor discharge samples collected during the reporting period.

In response to detections of VC and other compounds, air dispersion modeling was conducted for the emissions as detailed in the IRA Status Report dated May 29, 2012 (TRC, 2012b). Different models were employed to evaluate potential exposures to the NBHS air intake vent, exterior playground and parking lot area. The air dispersion modeling results indicated that the concentrations of VC and other compounds at these potential receptor points are significantly below the associated MassDEP Ambient Air Limits. The air dispersion model been updated periodically to include additional parameters and/or to revise the emission concentrations.[3]

3.2.6 Hydraulic Control and Venting System Operation and Maintenance Summary

In addition to effluent and vapor sample results, as summarized above, system inspection logs and quarterly system operator reports (see Appendix A) provided the following information as of the April 21, 2014 inspection:

- The flow meter recorded 235,982 gallons treated and discharged between October 15, 2013 and April 21, 2014. While the system was operating during this period, the average flow rate was 0.93 gpm. The average flow rate since system startup is approximately 0.86 gpm.
- The flow velocity of the venting system was measured on April 17, 2012 to be 5,600 to 5,650 feet per minute, which equates to approximately 110 cubic feet per minute (cfm). That measured flow rate is presumed to be representative of the current flow rate.
- System operating temperature (i.e., the ambient temperature in the vicinity of the hydraulic control system) ranged from 69°F to 80°F during the reporting period. This is a slightly broader range of temperatures than measured during the first eight weeks of system operation (70°F to 77°F).
- Vacuum influence continues to be measured in the monitoring wells located within the Mechanical Room (e.g., MW-28, MW-31, MW-32 and MW-41), some of them located over 30 feet from recovery wells MW-27R and/or MW-42R and showing a demonstrable negative pressure regime indicative of impact from the subslab ventilation system.
- Filtration breakthrough of VOCs has been detected in the aqueous phase treatment system since September 2012, when VC was detected in the effluent. The DPI discharge permit does not have limits for VOC discharges.

[3] See Appendix F of the IRA Status Report dated November 28, 2012.

- The discharge permit limit on PCB concentrations in the effluent is 5 milligrams per liter (mg/L). PCBs have not been detected in the aqueous phase treatment system effluent. Therefore, replacing the aqueous phase carbon is not required at this time.

3.3 Groundwater Sampling

Groundwater sampling has been conducted throughout the NBHS Campus between 2008 and 2014, the results of which are summarized in Table 2 and previous IRA-related documents referenced herein. The following section describes groundwater sampling conducted during the reporting period in association with the operation of the hydraulic control system.

3.3.1 Monitoring Well Sampling (Pre-Shutdown - January 2014)

Groundwater samples were collected in advance of the scheduled system shutdown during February 2014 school vacation week from four monitoring wells (MW-28, MW-32, MW-40 and MW-41) on January 16 and 17, 2014. Monitoring wells were sampled in accordance with EPA Region 1 low-flow sampling techniques. The groundwater sampling forms are included in Appendix C. The groundwater samples, including one duplicate, were submitted to Alpha for analysis of VOCs (SW-846 Method 8260B) and/or PCB Aroclors (SW-846 Method 8082. Filtered aliquots (2.0, 0.45 and/or 0.2 micron filters) from monitoring wells MW-28, MW-40 and MW-41 were also analyzed for PCB Aroclors. The results of these analyses are summarized in Table 2.

Monitoring wells MW-28, MW-32 and MW-41 exhibited detectable concentrations of VOCs, as shown in Table 2. No VOCs were detected above the laboratory reporting limits in the sample collected from monitoring well MW-40.

No PCB Aroclors were detected in the unfiltered or filtered (0.45 micron filter) samples from monitoring well MW-40. Wells MW-28 and MW-41 exhibited total PCB Aroclors (2.0 micron filter) at concentrations of 8.93 µg/L (9.33 µg/L in the duplicate) and 3.25 µg/L, respectively. Filtration with a 0.45 micron filter reduced the PCB Aroclor concentrations in MW-28 and MW-41 to non-detect (less than 0.250 µg/L) and 1.59 µg/L, respectively. The sample from monitoring well MW-41 filtered with a 0.2 micron filter was non-detect (less than 0.250 µg/L) for PCB Aroclors.

3.3.2 Recovery Well Sampling (Pre-Shutdown - February 14, 2014)

On February 14, 2014 groundwater samples were collected from recovery wells MW-27R and MW-42R in advance of the scheduled system shutdown during February school vacation week. Monitoring wells were sampled in general accordance with EPA Region 1 low-flow sampling techniques; however, samples were collected after approximately 30 minutes of well purging since the wells sampled are active recovery wells which had been operational prior to sampling activities on this day. The groundwater sampling forms are included in Appendix C. The groundwater samples were submitted to Alpha for analysis of VOCs (SW-846 Method 8260B) and PCB Aroclors (SW-846 Method 8082). Filtered aliquots (0.45 and 0.2 micron filters) from

the recovery wells were also analyzed for PCB Aroclors. The results of these analyses are summarized in Table 2.

Recovery wells MW-27R and MW-42R exhibited detectable concentrations of VOCs (see Table 2).

The unfiltered samples from recovery wells MW-27R and MW-42R exhibited total PCB Aroclors at concentrations of 6.95 µg/L and 6.66 µg/L, respectively. The filtered samples (0.45 and 0.2 micron filters) from both monitoring wells were non-detect (less than 0.250 µg/L) for PCB Aroclors (see Table 2).

3.3.3 Groundwater Sampling (Post-Shutdown - February 21, 2014)

Following an approximately one week system shutdown period, groundwater samples were collected on February 21, 2014 to assess the potential for VOC concentrations in groundwater to rebound if treatment system operation was discontinued. Groundwater samples were collected from monitoring wells MW-28 and MW-41 and recovery wells MW-27R and MW-42R in accordance with EPA Region 1 low-flow sampling techniques (with the samples from MW-27R and MW-42R again collected after 30 minutes of purging as discussed above). The groundwater sampling forms are included in Appendix C. The groundwater samples, including one duplicate, were submitted to Alpha for analysis of VOCs (SW-846 Method 8260B) and PCB Aroclors (SW-846 Method 8082). Filtered aliquots (0.45 and/or 0.2 micron filtering) from the wells were also analyzed for PCB Aroclors. The results of these analyses are summarized in Table 2.

Monitoring wells MW-28 and MW-41 and recovery wells MW-27R and MW-42R exhibited detectable concentrations of VOCs as shown in Table 2.

PCB results from February 21, 2014 are summarized in Table 2 and discussed below.

3.3.4 Evaluation of Pre- and Post-Shutdown Groundwater Results

For monitoring wells MW-28 and MW-41, the results of the pre- (January 16 and 17, 2014) and post-shutdown (February 21, 2014) groundwater sampling generally indicate consistency in the compounds (individual VOCs and PCB Aroclors) and concentrations detected before and after the scheduled system shutdown. For example, total PCB concentrations in unfiltered samples collected from monitoring well MW-28, located downgradient of the hydraulic control system, were approximately 9 ug/L in the pre- and post-shutdown samples taken approximately one month apart, while PCB levels ranged from 3.25 to 5.27 µg/L at well MW-41 over the same period.

Longer term trends in downgradient monitoring well MW-28 indicate PCB concentrations have decreased from 15 to 19 ug/L between August 2011 and December 2012 to approximately 9 ug/L in January and February 2014. VOC concentrations have also decreased over this period; TCE was detected at 21 to 24 ug/L in January and February 2014, down from 43 to 190 ug/L between August 2011 and December 2012.

In MW-27R, the TCE concentration rose from 1.2 ug/L on February 14, 2014 to 7.6 ug/L on February 21, 2014 while concentrations of the TCE breakdown compounds cis-1,2-DCE and VC were relatively unchanged. This suggests desorption of TCE from the soils in the vicinity of MW-27R may have occurred. In MW-42R, the TCE concentration decreased from 14 ug/L on February 14, 2014 to 4 ug/L on February 21, 2014 while the VC concentration increased from 8.2 ug/L to 110 ug/L, and cis- and trans-1,2-DCE levels also increased by a factor of 10. This suggests the presence of biological activity associated with the breakdown of TCE into daughter products in the vicinity of MW-42R.

Recovery well samples collected from MW-27R and MW-42R after the pumps had been turned off for a few hours on February 14, 2014 contained PCB concentrations of approximately 5 to 7 ug/L in the unfiltered samples. There was no significant change in the samples collected a week later.

3.4 Supplemental Soil Investigations

The initial NBHS Mechanical Room soil investigation was conducted between April 17 and 20, 2012 to evaluate the nature and extent of subsurface impacts in the vicinity of recovery well MW-27R to provide information regarding potential remedial options. Additional soil investigation activities were conducted in June and August 2012. The previous work is documented in the May and November 2012 IRA Status reports (TRC, 2012b and 2012c). Soil investigation activities during the reporting period are summarized below.

3.4.1 February 2014 Soil Investigation

Additional soil investigation activities were conducted via Geoprobe® direct push drilling techniques within the Mechanical Room (B-114) and adjacent Kitchen Storage Room (B-155) on February 18 and 19, 2014. Following a utility survey by PRO-Scanning of Westwood, Massachusetts (PRO-Scanning), a total of 11 supplemental soil borings were attempted. Seven soil borings (BF-1 through BF-7) were successfully advanced by New England Geotech of Jamestown, Rhode Island (New England Geotech) using an AMS 9100-VTR track-mounted drill rig and/or handheld Geoprobe® tools (Figure 4).[4] Soil boring logs are included in Appendix C. Soil boring locations were determined using a 3-meter sampling grid per 40 CFR §761.260 overlaid on the area/borings where PCB concentrations above 1 milligram per kilogram (mg/kg) were detected in soil during previous investigations. Select boring locations were adjusted due to overhead and/or underground utilities (or due to encountering refusal at the targeted location).

The soil borings were advanced to a depth of approximately 8 to 12 feet below grade with continuous geologic logging. Field screening was conducted using a PID per the MassDEP jar headspace procedure. Soil samples were collected at two foot intervals from each soil boring for laboratory analysis. Soil samples obtained during the investigation were submitted to Con-Test Analytical Laboratory in East Longmeadow, Massachusetts (Con-Test) for PCB analysis (Method 8082). Analytical results are summarized in Table 6 and the laboratory reports are

[4] Four proposed soil boring locations were attempted, but abandoned following refusal or identification of subsurface utility obstructions (see Figure 4).

included in Appendix B. The results generally indicate the extent of PCB concentrations above 1 mg/kg have been delineated to the north.

3.4.2 April 2014 Soil Investigation

Based on the results of the February 2014 supplemental investigation, additional Geoprobe® investigation activities were conducted within the Mechanical Room (B-114) and adjacent Kitchen Storage Room (B-155) between April 22 and 24, 2014. The results of this investigation will be discussed in a future IRA report. The following provides a brief summary of the work.

Following additional utility clearance by PRO-Scanning, a total of 13 soil borings (BA-1 through BA-13) were advanced for delineation purposes (see Figure 4). Consistent with previous investigations, boring locations were determined using a 3-meter sampling grid per 40 CFR §761.260 overlaid on the area/borings where PCB concentrations above 1 mg/kg were detected in soil during previous investigations. The borings were installed by New England Geotech using an AMS 9100-VTR track-mounted drill rig and/or handheld Geoprobe® tools. Soil samples obtained during the investigation were submitted to Con-Test for PCB analysis.

3.5 Management of Investigation or Remediation Waste

Groundwater extracted and treated under the IRA Plan Modification dated February 24, 2012 (TRC, 2012a) is discharged from the hydraulic control system to the municipal sanitary sewer system via a floor drain located in the former incinerator pit. Discharge to the sanitary sewer system is conducted in accordance with the Industrial Discharge Permit (#S-123) obtained by TRC from the City's DPI. The remedial wastewater has been managed in a manner consistent with 310 CMR 40.0041, General Provisions for the Management of Remedial Wastewater and/or Remedial Additives; 310 CMR 40.0043: Remedial Wastewater Discharges to Publicly Owned Treatment Works (POTW); and 310 CMR 40.0047, Reporting Requirements for Discharges of Remedial Wastewater and Remedial Additives.

Other waste products generated by the hydraulic control system include spent bag filters, spent carbon, spent organo-clay, and sediments accumulated in the settling tanks. Bag filters have been replaced several times since system startup and spent bag filters have been maintained in a drum. Spent carbon and organo-clay is accumulated on site and ultimately removed for appropriate off-site disposal. Sediment collected in the settling tanks will be removed for off-site disposal at a future date.

During this reporting period, one 55-gallon drum of spent carbon and one 55-gallon drum containing personal protective equipment (PPE) and spent bag filters related to system operation and maintenance were transported off-site for disposal. Following sample collection and analysis for the presence of PCBs and VOCs in December 2013 and January 2014, respectively (see Appendix B), the drums were shipped off-site for disposal on April 14, 2014 as Toxic Substances Control Act (TSCA) regulated waste. The drum containing spent carbon was also determined to comprise Resource Conservation and Recovery Act (RCRA) hazardous waste. The drums were shipped by Clean Harbors Environmental Services, Incorporated (CHES) of

Weymouth, Massachusetts under Uniform Hazardous Waste Manifests. The drum containing spent carbon was designated for incineration at the CHES Deer Park facility in La Porte, Texas (Manifest #007497944). The drum containing PPE and spent bag filters was designated for disposal at the CHES Grassy Mountain Landfill facility in Clive, Utah (Manifest #007497945). Copies of the manifests are included in Appendix D.

No other remediation waste was generated or managed during the reporting period.

3.6 MassDEP-Required Information

Based on the sampling conducted in January, April and August 2010 and April 2011, there is no IH Condition or chronic risk/hazard above MCP risk limits associated with current indoor air exposures.

An IH screening evaluation was performed and submitted with the IRA Plan (TRC, 2010a) and updated versions were included in the IRA Status Reports submitted to MassDEP on May 24, 2010 (TRC, 2010b) and November 29, 2010 (TRC, 2010c). An additional update was provided in the IRA Status Report dated May 31, 2011 (TRC, 2011b).

Sub-slab vapors in the vicinity of the recovery wells are extracted via a vacuum blower and treated with activated carbon prior to discharge via the incinerator stack. In addition, PCB concentrations in indoor air samples collected from the Mechanical Room (Room B-114) and adjacent shipping and receiving area (Room B-113) on February 23, 2011 were below the Acceptable Long-Term Average Exposure Concentration established by the EPA for the Keith Middle School and NBHS PCB air monitoring programs of 0.3 micrograms per cubic meter ($\mu g/m^3$) total PCBs.

No additional information was requested by MassDEP.

3.7 LSP Opinion

The objectives of this IRA have been to characterize soil, groundwater, seep water, soil vapor and indoor air to determine if vapor migration has occurred, to characterize VOCs in subsurface storm sewer lines and sanitary sewer lines to determine if VOC migration from the groundwater to the storm and sanitary sewer infrastructure has occurred, and to implement mitigation measures associated with the SRM condition at the NBHS building.

The IRA Plan Modifications dated January 18, 2011 (TRC, 2011a) and February 24, 2012 (TRC, 2012) added to the previously approved IRA activities the removal of chlorinated VOC-impacted groundwater in the vicinity of MW-27. The additional activities conducted under the second IRA Plan Modification are described in previous IRA Status reports, and include installation, operation and maintenance of a hydraulic control system in the vicinity of recovery wells MW-27R and MW-42R and further investigation of the soil, groundwater and NAPL.

This IRA Status Report has been prepared in accordance with 310 CMR 40.0425 as set forth in the MCP.

David M. Sullivan, LSP
TRC Environmental Corporation
Licensed Site Professional No. 1488

Date May 22, 2014

Stamp

4.0 REFERENCES

EPA, 2004 User's Guide for the AMS/EPA Regulatory Model – AERMOD. EPA-454/B-03-001. U.S. Environmental Protection Agency, Research Triangle Park, NC 27711.

EPA, 2009 Risk Management Program Guidance for Offsite Consequence Analysis, United States Environmental Protection Agency, Office of Solid Waste and Emergency Response, EPA 550-B-99-009, March 2009.

EPA, 2011 *ProUCL version 4.1.01. July 2011.* *http://www.epa.gov/osp/hstl/tsc/software.htm*

EPA, 2012 *Regional Screening Levels (RSLs).* http://www.epa.gov/region9/superfund/prg/. November 2012.

MassDEP, 2010 Risk Management Criteria - MassDEP Indoor Air Threshold Values, Vapor Intrusion Guidance – Interim Draft, December 2010.

TRC, 2010a *Immediate Response Action Plan, New Bedford High School Substantial Release Migration / Critical Exposure Pathway, 230 Hathaway Boulevard, New Bedford, Massachusetts.* Prepared for: City of New Bedford Department of Environmental Stewardship. Prepared by: TRC Environmental Corporation. March 2010.

TRC, 2010b *Immediate Response Action Status Report - New Bedford High School Substantial Release Migration / Critical Exposure Pathway, 230 Hathaway Boulevard, New Bedford, Massachusetts.* Prepared for: City of New Bedford Department of Environmental Stewardship. Prepared by: TRC Environmental Corporation. May, 2010.

TRC, 2010c *Immediate Response Action Status Report - New Bedford High School Substantial Release Migration / Critical Exposure Pathway, 230 Hathaway Boulevard, New Bedford, Massachusetts.* Prepared for: City of New Bedford Department of Environmental Stewardship. Prepared by: TRC Environmental Corporation. November, 2010.

TRC, 2011a *Immediate Response Action Plan Modification - New Bedford High School, 230 Hathaway Boulevard, New Bedford, Massachusetts.* Prepared for: City of New Bedford Department of Environmental Stewardship. Prepared by: TRC Environmental Corporation. January, 2011.

TRC, 2011b *Immediate Response Action Status Report - New Bedford High School Substantial Release Migration / Critical Exposure Pathway, 230 Hathaway Boulevard, New Bedford, Massachusetts.* Prepared for: City of New Bedford Department of Environmental Stewardship. Prepared by: TRC Environmental Corporation. May, 2011.

TRC, 2011c *Immediate Response Action Status Report - New Bedford High School Substantial Release Migration / Critical Exposure Pathway, 230 Hathaway Boulevard, New Bedford, Massachusetts.* Prepared for: City of New Bedford Department of Environmental Stewardship. Prepared by: TRC Environmental Corporation. November, 2011.

TRC, 2012a *Immediate Response Action Plan Modification - New Bedford High School, 230 Hathaway Boulevard, New Bedford, Massachusetts.* Prepared for: City of New Bedford Department of Environmental Stewardship. Prepared by: TRC Environmental Corporation. February, 2012.

TRC, 2012b *Immediate Response Action Status Report - New Bedford High School Substantial Release Migration / Critical Exposure Pathway, 230 Hathaway Boulevard, New Bedford, Massachusetts.* Prepared for: City of New Bedford Department of Environmental Stewardship. Prepared by: TRC Environmental Corporation. May, 2012.

TRC, 2012c *Immediate Response Action Status Report - New Bedford High School Substantial Release Migration / Critical Exposure Pathway, 230 Hathaway Boulevard, New Bedford, Massachusetts.* Prepared for: City of New Bedford Department of Environmental Stewardship. Prepared by: TRC Environmental Corporation. November, 2012.

TRC, 2013a *Immediate Response Action Status Report - New Bedford High School Substantial Release Migration / Critical Exposure Pathway, 230 Hathaway Boulevard, New Bedford, Massachusetts.* Prepared for: City of New Bedford Department of Environmental Stewardship. Prepared by: TRC Environmental Corporation. May, 2013.

TRC, 2013b *Immediate Response Action Status Report - New Bedford High School Substantial Release Migration / Critical Exposure Pathway, 230 Hathaway Boulevard, New Bedford, Massachusetts.* Prepared for: City of New Bedford Department of Environmental Stewardship. Prepared by: TRC Environmental Corporation. December, 2013.

TABLES

Table 1
Summary of Analytical Results for Aqueous Seep Samples
December 2009 through January 2013
New Bedford High School
New Bedford, Massachusetts

Analysis	Analyte	Sample Location:		**NBHSBRM**	**BRM-S-1**			**BRM-S-2**				**BRM-S-3**						**WEST SEEP**	**FIP-S-1**		
		Sample ID:		NBHSBRM	BRM-S-1			BRM-S-2			WEST SEEP	BRM-S-3				EAST SEEP		WEST SEEP	FIP-S-1		
		Sample Date:		2/20/2009	12/2/2009	1/7/2010	1/30/2010	12/2/2009	1/7/2010	1/30/2010	2/27/2012	12/2/2009	1/7/2010	1/30/2010	1/30/2010	2/27/2012	1/15/2013	1/15/2013	12/2/2009	1/7/2010	1/30/2010
		GW-2	GW-3												Field Dup						
VOCs																					
(ug/L)	Methylene Chloride	10,000	50,000	NA	5.0 U	5.0 U	1.0 U	5.0 U	5.0 U	1.0 U	2.0 U	5.0 U	5.0 U	1.0 U	1.0 U	20 U	2.0 U	2.0 U	5.0 U	5.0 U	1.0 U
	1,1-Dichloroethane	1,000	20,000	NA	1.0 U	1.0 U	1.0 U	1.0 U	1.0 U	1.0 U	1.0 U	1.0 U	1.0 U	1.0 U	1.0 U	10 U	1.0 U	1.0 U	1.0 U	1.0 U	1.0 U
	Chloroform	50	20,000	NA	2.0 U	2.0 U	1.0 U	2.0 U	2.0 U	1.0 U	1.0 U	2.0 U	2.0 U	1.0 U	1.0 U	10 U	1.0 U	1.0 U	2.0 U	2.0 U	1.0 U
	Carbon Tetrachloride	2	5,000	NA	1.0 U	1.0 U	1.0 U	1.0 U	1.0 U	1.0 U	1.0 U	1.0 U	1.0 U	1.0 U	1.0 U	10 U	1.0 U	1.0 U	1.0 U	1.0 U	1.0 U
	1,2-Dichloropropane	3	50,000	NA	1.0 U	1.0 U	1.0 U	1.0 U	1.0 U	1.0 U	1.0 U	1.0 U	1.0 U	1.0 U	1.0 U	10 U	1.0 U	1.0 U	1.0 U	1.0 U	1.0 U
	Chlorodibromomethane	20	50,000	NA	0.50 U	10 U	1.0 U	0.50 U	10 U	1.0 U	1.0 U	0.50 U	10 U	1.0 U	1.0 U	10 U	1.0 U	1.0 U	0.50 U	10 U	1.0 U
	1,1,2-Trichloroethane	900	50,000	NA	1.0 U	1.0 U	1.0 U	1.0 U	1.0 U	1.0 U	1.0 U	1.0 U	1.0 U	1.0 U	1.0 U	10 U	1.0 U	1.0 U	1.0 U	1.0 U	1.0 U
	Tetrachloroethylene	50	30,000	NA	1.0 U	1.0 U	1.0 U	1.0 U	1.0 U	1.0 U	1.0 U	1.0 U	1.0 U	1.0 U	1.0 U	10 U	1.0 U	1.0 U	1.0 U	1.0 U	1.0 U
	Chlorobenzene	200	1,000	NA	1.0 U	1.0 U	1.0 U	1.0 U	1.0 U	1.0 U	1.0 U	1.0 U	**9.5**	1.0 U	1.0 U	10 U	1.0 U	1.0 U	1.0 U	1.0 U	1.0 U
	Trichlorofluoromethane (Freon 11)	NS	NS	NA	2.0 U	2.0 U	2.0 U	2.0 U	2.0 U	2.0 U	2.0 U	2.0 U	2.0 U	2.0 U	2.0 U	20 U	2.0 U	2.0 U	2.0 U	2.0 U	2.0 U
	1,2-Dichloroethane	5	20,000	NA	1.0 U	1.0 U	1.0 U	1.0 U	1.0 U	1.0 U	1.0 U	1.0 U	1.0 U	1.0 U	1.0 U	10 U	1.0 U	1.0 U	1.0 U	1.0 U	1.0 U
	1,1,1-Trichloroethane	4,000	20,000	NA	1.0 U	1.0 U	1.0 U	1.0 U	1.0 U	1.0 U	1.0 U	1.0 U	1.0 U	1.0 U	1.0 U	10 U	1.0 U	1.0 U	1.0 U	1.0 U	1.0 U
	Bromodichloromethane	6	50,000	NA	1.0 U	5.0 U	1.0 U	1.0 U	5.0 U	1.0 U	1.0 U	1.0 U	5.0 U	1.0 U	1.0 U	10 U	1.0 U	1.0 U	1.0 U	5.0 U	1.0 U
	trans-1,3-Dichloropropene	10[2]	200[2]	NA	0.50 U	5.0 U	0.50 U	0.50 U	5.0 U	0.50 U	0.50 U	0.50 U	5.0 U	0.50 U	0.50 U	5.0 U	0.50 U	0.50 U	0.50 U	5.0 U	0.50 U
	cis-1,3-Dichloropropene	10[2]	200[2]	NA	0.50 U	5.0 U	0.50 U	0.50 U	5.0 U	0.50 U	0.50 U	0.50 U	5.0 U	0.50 U	0.50 U	5.0 U	0.50 U	0.50 U	0.50 U	5.0 U	0.50 U
	1,1-Dichloropropene	NS	NS	NA	2.0 U	2.0 U	1.0 U	2.0 U	2.0 U	1.0 U	2.0 U	2.0 U	2.0 U	1.0 U	1.0 U	20 U	2.0 U	2.0 U	2.0 U	2.0 U	1.0 U
	Bromoform	700	50,000	NA	5.0 U	10 U	1.0 U	5.0 U	10 U	1.0 U	2.0 U	5.0 U	10 U	1.0 U	1.0 U	20 U	2.0 U	2.0 U	5.0 U	10 U	1.0 U
	1,1,2,2-Tetrachloroethane	9	50,000	NA	0.50 U	0.50 U	2.0 U	0.50 U	0.50 U	2.0 U	1.0 U	0.50 U	0.50 U	2.0 U	2.0 U	10 U	1.0 U	1.0 U	0.50 U	0.50 U	2.0 U
	Benzene	2,000	10,000	NA	1.0 U	1.0 U	1.0 U	1.0 U	1.0 U	1.0 U	0.50 U	1.0 U	1.0 U	1.0 U	1.0 U	5.0 U	0.50 U	0.50 U	1.0 U	1.0 U	1.0 U
	Toluene	50,000	40,000	NA	1.0 U	1.0 U	1.0 U	1.0 U	1.0 U	1.0 U	1.0 U	1.0 U	1.0 U	1.0 U	1.0 U	10 U	1.0 U	1.0 U	1.0 U	1.0 U	1.0 U
	Ethylbenzene	20,000	5,000	NA	1.0 U	1.0 U	1.0 U	1.0 U	1.0 U	1.0 U	1.0 U	1.0 U	1.0 U	1.0 U	1.0 U	10 U	1.0 U	1.0 U	1.0 U	1.0 U	1.0 U
	Chloromethane	NS	NS	NA	2.0 U	2.0 U	1.0 U	2.0 U	2.0 U	1.0 U	2.0 U	2.0 U	2.0 U	1.0 U	1.0 U	20 U	2.0 U	2.0 U	2.0 U	2.0 U	1.0 U
	Bromomethane	7	800	NA	2.0 U	2.0 U	5.0 U	2.0 U	2.0 U	5.0 U	2.0 U	2.0 U	2.0 U	5.0 U	5.0 U	20 U	2.0 U	2.0 U	2.0 U	2.0 U	5.0 U
	Vinyl Chloride	2	50,000	NA	2.0 U	2.0 U	1.0 U	2.0 U	2.0 U	1.0 U	1.0 U	**2.1**	**34**	**1.4**	**1.3**	10 U	1.0 U	1.0 U	2.0 U	2.0 U	**1.3**
	Chloroethane	NS	NS	NA	2.0 U	2.0 U	1.0 U	2.0 U	2.0 U	1.0 U	2.0 U	2.0 U	2.0 U	1.0 U	1.0 U	20 U	2.0 U	2.0 U	2.0 U	2.0 U	1.0 U
	1,1-Dichloroethylene	80	30,000	NA	1.0 U	1.0 U	1.0 U	1.0 U	1.0 U	1.0 U	1.0 U	1.0 U	1.0 U	1.0 U	1.0 U	10 U	1.0 U	1.0 U	1.0 U	1.0 U	1.0 U
	trans-1,2-Dichloroethylene	90	50,000	NA	1.0 U	1.0 U	1.0 U	1.0 U	1.0 U	1.0 U	1.0 U	**14**	**57**	**8.2**	**8.1**	10 U	1.0 U	1.0 U	1.0 U	**1.0**	**1.4**
	Trichloroethylene	30	5,000	NA	1.0 U	1.0 U	1.0 U	1.0 U	1.0 U	1.0 U	1.0 U	1.0 U	**6.0**	**1.2**	**1.3**	10 U	1.0 U	1.0 U	1.0 U	1.0 U	1.0 U
	1,2-Dichlorobenzene	2,000	2,000	NA	1.0 U	1.0 U	1.0 U	1.0 U	1.0 U	1.0 U	1.0 U	1.0 U	1.0 U	1.0 U	1.0 U	10 U	1.0 U	1.0 U	1.0 U	1.0 U	1.0 U
	1,3-Dichlorobenzene	2,000	50,000	NA	1.0 U	1.0 U	1.0 U	1.0 U	1.0 U	1.0 U	1.0 U	1.0 U	**1.6**	1.0 U	1.0 U	10 U	1.0 U	1.0 U	1.0 U	1.0 U	1.0 U
	1,4-Dichlorobenzene	200	8,000	NA	1.0 U	1.0 U	1.0 U	1.0 U	1.0 U	1.0 U	1.0 U	1.0 U	**6.8**	1.0 U	1.0 U	10 U	1.0 U	1.0 U	1.0 U	1.0 U	1.0 U
	Methyl tert-Butyl Ether (MTBE)	50,000	50,000	NA	1.0 U	1.0 U	2.0 U	1.0 U	1.0 U	2.0 U	2.0 U	1.0 U	1.0 U	2.0 U	2.0 U	20 U	2.0 U	2.0 U	1.0 U	1.0 U	2.0 U
	m+p Xylene	9,000	5,000	NA	2.0 U	2.0 U	2.0 U	2.0 U	2.0 U	2.0 U	2.0 U	2.0 U	2.0 U	2.0 U	2.0 U	20 U	2.0 U	2.0 U	2.0 U	2.0 U	2.0 U
	o-Xylene	9,000	5,000	NA	1.0 U	1.0 U	2.0 U	1.0 U	1.0 U	2.0 U	1.0 U	1.0 U	1.0 U	2.0 U	2.0 U	10 U	1.0 U	1.0 U	1.0 U	1.0 U	2.0 U
	cis-1,2-Dichloroethylene	100	50,000	NA	1.0 U	1.0 U	1.0 U	1.0 U	1.0 U	1.0 U	1.0 U	**54**	**180**	**24**	**23**	10 U	1.0 U	1.0 U	1.0 U	**5.6**	**7.2**
	Dibromomethane	NS	NS	NA	1.0 U	1.0 U	1.0 U	1.0 U	1.0 U	1.0 U	2.0 U	1.0 U	1.0 U	1.0 U	1.0 U	20 U	2.0 U	2.0 U	1.0 U	1.0 U	1.0 U
	1,2,3-Trichloropropane	NS	NS	NA	2.0 U	2.0 U	1.0 U	2.0 U	2.0 U	1.0 U	2.0 U	2.0 U	2.0 U	1.0 U	1.0 U	20 U	2.0 U	2.0 U	2.0 U	2.0 U	1.0 U
	Styrene	100	6,000	NA	1.0 U	1.0 U	1.0 U	1.0 U	1.0 U	1.0 U	1.0 U	1.0 U	1.0 U	1.0 U	1.0 U	10 U	1.0 U	1.0 U	1.0 U	1.0 U	1.0 U
	Dichlorodifluoromethane (Freon 12)	NS	NS	NA	2.0 U	2.0 U	1.0 U	2.0 U	2.0 U	1.0 U	2.0 U	2.0 U	2.0 U	1.0 U	1.0 U	20 U	2.0 U	2.0 U	2.0 U	2.0 U	1.0 U
	Acetone	50,000	50,000	NA	50 U	50 U	5.0 U	50 U	50 U	5.0 U	5.0 U	50 U	50 U	5.0 U	5.0 U	50 U	5.0 U	**8.9**	50 U	50 U	5.0 U
	Carbon Disulfide	NS	NS	NA	3.0 U	5.0 U	1.0 U	3.0 U	5.0 U	1.0 U	2.0 U	3.0 U	5.0 U	1.0 U	1.0 U	20 U	2.0 U	2.0 U	3.0 U	5.0 U	1.0 U
	2-Butanone (MEK)	50,000	50,000	NA	20 U	20 U	10 U	20 U	20 U	10 U	5.0 U	20 U	20 U	10 U	10 U	50 U	5.0 U	5.0 U	20 U	20 U	10 U
	4-Methyl-2-pentanone (MIBK)	50,000	50,000	NA	10 U	10 U	5.0 U	10 U	10 U	5.0 U	5.0 U	10 U	10 U	5.0 U	5.0 U	50 U	5.0 U	5.0 U	10 U	10 U	5.0 U
	2-Hexanone (MBK)	NS	NS	NA	10 U	10 U	1.0 U	10 U	10 U	1.0 U	5.0 U	10 U	10 U	1.0 U	1.0 U	50 U	5.0 U	5.0 U	10 U	10 U	1.0 U
	Bromochloromethane	NS	NS	NA	1.0 U	1.0 U	1.0 U	1.0 U	1.0 U	1.0 U	2.0 U	1.0 U	1.0 U	1.0 U	1.0 U	20 U	2.0 U	2.0 U	1.0 U	1.0 U	1.0 U
	Tetrahydrofuran	NS	NS	NA	10 U	10 U	5.0 U	10 U	10 U	5.0 U	5.0 U	10 U	10 U	5.0 U	5.0 U	50 U	5.0 U	5.0 U	10 U	10 U	5.0 U
	2,2-Dichloropropane	NS	NS	NA	1.0 U	1.0 U	1.0 U	1.0 U	1.0 U	1.0 U	2.0 U	1.0 U	1.0 U	1.0 U	1.0 U	20 U	2.0 U	2.0 U	1.0 U	1.0 U	1.0 U
	1,2-Dibromoethane (EDB)	2	50,000	NA	0.50 U	0.50 U	1.0 U	0.50 U	0.50 U	1.0 U	2.0 U	0.50 U	0.50 U	1.0 U	1.0 U	20 U	2.0 U	2.0 U	0.50 U	0.50 U	1.0 U
	1,3-Dichloropropane	NS	NS	NA	0.50 U	0.50 U	1.0 U	0.50 U	0.50 U	1.0 U	2.0 U	0.50 U	0.50 U	1.0 U	1.0 U	20 U	2.0 U	2.0 U	0.50 U	0.50 U	1.0 U
	1,1,1,2-Tetrachloroethane	10	50,000	NA	1.0 U	5.0 U	1.0 U	1.0 U	5.0 U	1.0 U	1.0 U	1.0 U	5.0 U	1.0 U	1.0 U	10 U	1.0 U	1.0 U	1.0 U	5.0 U	1.0 U
	Bromobenzene	NS	NS	NA	1.0 U	1.0 U	1.0 U	1.0 U	1.0 U	1.0 U	2.0 U	1.0 U	1.0 U	1.0 U	1.0 U	20 U	2.0 U	2.0 U	1.0 U	1.0 U	1.0 U
	n-Butylbenzene	7,000[1]	50,000[1]	NA	1.0 U	1.0 U	1.0 U	1.0 U	1.0 U	1.0 U	2.0 U	1.0 U	1.0 U	1.0 U	1.0 U	20 U	2.0 U	2.0 U	1.0 U	1.0 U	1.0 U
	sec-Butylbenzene	7,000[1]	50,000[1]	NA	1.0 U	1.0 U	1.0 U	1.0 U	1.0 U	1.0 U	2.0 U	1.0 U	1.0 U	1.0 U	1.0 U	20 U	2.0 U	2.0 U	1.0 U	1.0 U	1.0 U
	tert-Butylbenzene	7,000[1]	50,000[1]	NA	1.0 U	1.0 U	1.0 U	1.0 U	1.0 U	1.0 U	2.0 U	1.0 U	1.0 U	1.0 U	1.0 U	20 U	2.0 U	2.0 U	1.0 U	1.0 U	1.0 U
	2-Chlorotoluene	NS	NS	NA	1.0 U	1.0 U	1.0 U	1.0 U	1.0 U	1.0 U	2.0 U	1.0 U	1.0 U	1.0 U	1.0 U	20 U	2.0 U	2.0 U	1.0 U	1.0 U	1.0 U

Table 1
Summary of Analytical Results for Aqueous Seep Samples
December 2009 through January 2013
New Bedford High School
New Bedford, Massachusetts

Analysis	Analyte	Sample Location:		**NBHSBRM**	**BRM-S-1**			**BRM-S-2**				**BRM-S-3**						**WEST SEEP**	**FIP-S-1**		
		Sample ID:		NBHSBRM	BRM-S-1			BRM-S-2			WEST SEEP	BRM-S-3				EAST SEEP		WEST SEEP	FIP-S-1		
		Sample Date:		2/20/2009	12/2/2009	1/7/2010	1/30/2010	12/2/2009	1/7/2010	1/30/2010	2/27/2012	12/2/2009	1/7/2010	1/30/2010	1/30/2010	2/27/2012	1/15/2013	1/15/2013	12/2/2009	1/7/2010	1/30/2010
		GW-2	GW-3												Field Dup						
	4-Chlorotoluene	NS	NS	NA	1.0 U	1.0 U	1.0 U	1.0 U	1.0 U	1.0 U	2.0 U	1.0 U	1.0 U	1.0 U	1.0 U	20 U	2.0 U	2.0 U	1.0 U	1.0 U	1.0 U
	1,2-Dibromo-3-chloropropane (DBCP)	NS	NS	NA	5.0 U	10 U	5.0 U	5.0 U	10 U	5.0 U	2.0 U	5.0 U	10 U	5.0 U	5.0 U	20 U	2.0 U	2.0 U	5.0 U	10 U	5.0 U
	Hexachlorobutadiene	1	3,000	NA	1.0 U	1.0 U	0.50 U	1.0 U	1.0 U	0.50 U	0.60 U	1.0 U	1.0 U	0.50 U	0.50 U	6.0 U	0.60 U	0.60 U	1.0 U	1.0 U	0.50 U
	Isopropylbenzene (Cumene)	7,000(1)	50,000(1)	NA	1.0 U	1.0 U	1.0 U	1.0 U	1.0 U	1.0 U	2.0 U	1.0 U	1.0 U	1.0 U	1.0 U	20 U	2.0 U	2.0 U	1.0 U	1.0 U	1.0 U
	p-Isopropyltoluene (p-Cymene)	7,000(1)	50,000(1)	NA	1.0 U	1.0 U	1.0 U	1.0 U	1.0 U	1.0 U	2.0 U	1.0 U	1.0 U	1.0 U	1.0 U	20 U	2.0 U	2.0 U	1.0 U	1.0 U	1.0 U
	Naphthalene	1,000	20,000	NA	5.0 U	2.0 U	5.0 U	5.0 U	2.0 U	5.0 U	2.0 U	5.0 U	2.0 U	5.0 U	5.0 U	20 U	2.0 U	2.0 U	5.0 U	2.0 U	5.0 U
	n-Propylbenzene	7,000(1)	50,000(1)	NA	1.0 U	1.0 U	1.0 U	1.0 U	1.0 U	1.0 U	2.0 U	1.0 U	1.0 U	1.0 U	1.0 U	20 U	2.0 U	2.0 U	1.0 U	1.0 U	1.0 U
	1,2,3-Trichlorobenzene	NS	NS	NA	5.0 U	5.0 U	2.0 U	5.0 U	5.0 U	2.0 U	2.0 U	5.0 U	5.0 U	2.0 U	2.0 U	20 U	2.0 U	2.0 U	5.0 U	5.0 U	2.0 U
	1,2,4-Trichlorobenzene	2,000	50,000	NA	5.0 U	1.0 U	2.0 U	5.0 U	1.0 U	2.0 U	2.0 U	5.0 U	1.0 U	2.0 U	2.0 U	20 U	2.0 U	2.0 U	5.0 U	1.0 U	2.0 U
	1,3,5-Trimethylbenzene	7,000(1)	50,000(1)	NA	1.0 U	1.0 U	1.0 U	1.0 U	1.0 U	1.0 U	2.0 U	1.0 U	1.0 U	1.0 U	1.0 U	20 U	2.0 U	2.0 U	1.0 U	1.0 U	1.0 U
	1,2,4-Trimethylbenzene	7,000(1)	50,000(1)	NA	1.0 U	1.0 U	1.0 U	1.0 U	1.0 U	1.0 U	2.0 U	1.0 U	1.0 U	1.0 U	1.0 U	20 U	2.0 U	2.0 U	1.0 U	1.0 U	1.0 U
	Diethyl Ether	NS	NS	NA	2.0 U	2.0 U	2.0 U	2.0 U	2.0 U	2.0 U	2.0 U	2.0 U	2.0 U	2.0 U	2.0 U	20 U	2.0 U	2.0 U	2.0 U	2.0 U	2.0 U
	Diisopropyl Ether (DIPE)	NS	NS	NA	0.50 U	0.50 U	2.0 U	0.50 U	0.50 U	2.0 U	2.0 U	0.50 U	0.50 U	2.0 U	2.0 U	20 U	2.0 U	2.0 U	0.50 U	0.50 U	2.0 U
	tert-Butyl Ethyl Ether (TBEE)	NS	NS	NA	0.50 U	0.50 U	2.0 U	0.50 U	0.50 U	2.0 U	2.0 U	0.50 U	0.50 U	2.0 U	2.0 U	20 U	2.0 U	2.0 U	0.50 U	0.50 U	2.0 U
	tert-Amyl Methyl Ether (TAME)	NS	NS	NA	0.50 U	0.50 U	2.0 U	0.50 U	0.50 U	2.0 U	2.0 U	0.50 U	0.50 U	2.0 U	2.0 U	20 U	2.0 U	2.0 U	0.50 U	0.50 U	2.0 U
	1,4-Dioxane	6,000	50,000	NA	50 U	50 U	100 U	50 U	50 U	100 U	250 U	50 U	50 U	100 U	100 U	2,500 U	250 U	250 U	50 U	50 U	100 U
EPH																					
(ug/L)	C9-C18 Aliphatics	5,000	50,000	NA	150 U	NA	NA	150 U	NA	NA	NA	150 U	NA	NA	NA	NA	NA	NA	150 U	NA	NA
	C19-C36 Aliphatics	NS	50,000	NA	**190**	NA	NA	150 U	NA	NA	NA	150 U	NA	NA	NA	NA	NA	NA	150 U	NA	NA
	C11-C22 Aromatics	50,000	5,000	NA	100 U	NA	NA	100 U	NA	NA	NA	100 U	NA	NA	NA	NA	NA	NA	100 U	NA	NA
	Acenaphthene	NS	6,000	NA	2.0 U	NA	NA	2.0 U	NA	NA	NA	2.0 U	NA	NA	NA	NA	NA	NA	2.0 U	NA	NA
	Acenaphthylene	10,000	40	NA	2.0 U	NA	NA	2.0 U	NA	NA	NA	2.0 U	NA	NA	NA	NA	NA	NA	2.0 U	NA	NA
	Anthracene	NS	30	NA	2.0 U	NA	NA	2.0 U	NA	NA	NA	2.0 U	NA	NA	NA	NA	NA	NA	2.0 U	NA	NA
	Benzo(a)anthracene	NS	1,000	NA	2.0 U	NA	NA	2.0 U	NA	NA	NA	2.0 U	NA	NA	NA	NA	NA	NA	2.0 U	NA	NA
	Benzo(a)pyrene	NS	500	NA	2.0 U	NA	NA	2.0 U	NA	NA	NA	2.0 U	NA	NA	NA	NA	NA	NA	2.0 U	NA	NA
	Benzo(b)fluoranthene	NS	400	NA	2.0 U	NA	NA	2.0 U	NA	NA	NA	2.0 U	NA	NA	NA	NA	NA	NA	2.0 U	NA	NA
	Benzo(g,h,i)perylene	NS	20	NA	2.0 U	NA	NA	2.0 U	NA	NA	NA	2.0 U	NA	NA	NA	NA	NA	NA	2.0 U	NA	NA
	Benzo(k)fluoranthene	NS	100	NA	2.0 U	NA	NA	2.0 U	NA	NA	NA	2.0 U	NA	NA	NA	NA	NA	NA	2.0 U	NA	NA
	Chrysene	NS	70	NA	2.0 U	NA	NA	2.0 U	NA	NA	NA	2.0 U	NA	NA	NA	NA	NA	NA	2.0 U	NA	NA
	Dibenz(a,h)anthracene	NS	40	NA	2.0 U	NA	NA	2.0 U	NA	NA	NA	2.0 U	NA	NA	NA	NA	NA	NA	2.0 U	NA	NA
	Fluoranthene	NS	200	NA	2.0 U	NA	NA	2.0 U	NA	NA	NA	2.0 U	NA	NA	NA	NA	NA	NA	2.0 U	NA	NA
	Fluorene	NS	40	NA	2.0 U	NA	NA	2.0 U	NA	NA	NA	2.0 U	NA	NA	NA	NA	NA	NA	2.0 U	NA	NA
	Indeno(1,2,3-cd)pyrene	NS	100	NA	2.0 U	NA	NA	2.0 U	NA	NA	NA	2.0 U	NA	NA	NA	NA	NA	NA	2.0 U	NA	NA
	2-Methylnaphthalene	2,000	20,000	NA	2.0 U	NA	NA	2.0 U	NA	NA	NA	2.0 U	NA	NA	NA	NA	NA	NA	2.0 U	NA	NA
	Naphthalene	1,000	20,000	NA	2.0 U	NA	NA	2.0 U	NA	NA	NA	2.0 U	NA	NA	NA	NA	NA	NA	2.0 U	NA	NA
	Phenanthrene	NS	10,000	NA	2.0 U	NA	NA	2.0 U	NA	NA	NA	2.0 U	NA	NA	NA	NA	NA	NA	2.0 U	NA	NA
	Pyrene	NS	20	NA	2.0 U	NA	NA	2.0 U	NA	NA	NA	2.0 U	NA	NA	NA	NA	NA	NA	2.0 U	NA	NA
PAHs																					
(ug/L)	Acenaphthene	NS	6,000	NA	0.30 U	NA	NA	0.30 U	NA	NA	NA	0.30 U	NA	NA	NA	NA	NA	NA	0.30 U	NA	NA
	Acenaphthylene	10,000	40	NA	0.30 U	NA	NA	0.30 U	NA	NA	NA	0.30 U	NA	NA	NA	NA	NA	NA	0.30 U	NA	NA
	Anthracene	NS	30	NA	0.20 U	NA	NA	0.20 U	NA	NA	NA	0.20 U	NA	NA	NA	NA	NA	NA	0.20 U	NA	NA
	Benzo(a)anthracene	NS	1,000	NA	0.050 U	NA	NA	0.050 U	NA	NA	NA	0.050 U	NA	NA	NA	NA	NA	NA	0.050 U	NA	NA
	Benzo(a)pyrene	NS	500	NA	0.10 U	NA	NA	0.10 U	NA	NA	NA	0.10 U	NA	NA	NA	NA	NA	NA	0.10 U	NA	NA
	Benzo(b)fluoranthene	NS	400	NA	0.050 U	NA	NA	0.050 U	NA	NA	NA	0.050 U	NA	NA	NA	NA	NA	NA	0.050 U	NA	NA
	Benzo(g,h,i)perylene	NS	20	NA	0.50 U	NA	NA	0.50 U	NA	NA	NA	0.50 U	NA	NA	NA	NA	NA	NA	0.50 U	NA	NA
	Benzo(k)fluoranthene	NS	100	NA	0.20 U	NA	NA	0.20 U	NA	NA	NA	0.20 U	NA	NA	NA	NA	NA	NA	0.20 U	NA	NA
	Chrysene	NS	70	NA	0.20 U	NA	NA	0.20 U	NA	NA	NA	0.20 U	NA	NA	NA	NA	NA	NA	0.20 U	NA	NA
	Dibenz(a,h)anthracene	NS	40	NA	0.20 U	NA	NA	0.20 U	NA	NA	NA	0.20 U	NA	NA	NA	NA	NA	NA	0.20 U	NA	NA
	Fluoranthene	NS	200	NA	0.50 U	NA	NA	0.50 U	NA	NA	NA	0.50 U	NA	NA	NA	NA	NA	NA	0.50 U	NA	NA
	Fluorene	NS	40	NA	1.0 U	NA	NA	1.0 U	NA	NA	NA	1.0 U	NA	NA	NA	NA	NA	NA	1.0 U	NA	NA
	Indeno(1,2,3-cd)pyrene	NS	100	NA	0.20 U	NA	NA	0.20 U	NA	NA	NA	0.20 U	NA	NA	NA	NA	NA	NA	0.20 U	NA	NA
	2-Methylnaphthalene	2,000	20,000	NA	1.0 U	NA	NA	1.0 U	NA	NA	NA	1.0 U	NA	NA	NA	NA	NA	NA	1.0 U	NA	NA
	Naphthalene	1,000	20,000	NA	1.0 U	NA	NA	1.0 U	NA	NA	NA	1.0 U	NA	NA	NA	NA	NA	NA	1.0 U	NA	NA
	Phenanthrene	NS	10,000	NA	0.050 U	NA	NA	0.050 U	NA	NA	NA	0.050 U	NA	NA	NA	NA	NA	NA	0.050 U	NA	NA
	Pyrene	NS	20	NA	1.0 U	NA	NA	1.0 U	NA	NA	NA	1.0 U	NA	NA	NA	NA	NA	NA	1.0 U	NA	NA

Table 1
Summary of Analytical Results for Aqueous Seep Samples
December 2009 through January 2013
New Bedford High School
New Bedford, Massachusetts

Analysis	Analyte	Sample Location:		**NBHSBRM**	**BRM-S-1**			**BRM-S-2**				**BRM-S-3**						**WEST SEEP**	**FIP-S-1**		
		Sample ID:		NBHSBRM	BRM-S-1			BRM-S-2			WEST SEEP	BRM-S-3				EAST SEEP		WEST SEEP	FIP-S-1		
		Sample Date:		2/20/2009	12/2/2009	1/7/2010	1/30/2010	12/2/2009	1/7/2010	1/30/2010	2/27/2012	12/2/2009	1/7/2010	1/30/2010	1/30/2010 Field Dup	2/27/2012	1/15/2013	1/15/2013	12/2/2009	1/7/2010	1/30/2010
		GW-2	GW-3																		
PCBs																					
(ug/L)	Aroclor 1016	5	10	1.0 U	0.0500 U	NA	NA	0.0500 U	NA	NA	NA	0.0500 U	NA	NA	NA	NA	NA	NA	0.0500 U	NA	NA
	Aroclor 1221	5	10	1.0 U	0.0500 U	NA	NA	0.0500 U	NA	NA	NA	0.0500 U	NA	NA	NA	NA	NA	NA	0.0500 U	NA	NA
	Aroclor 1232	5	10	1.0 U	0.0500 U	NA	NA	0.0500 U	NA	NA	NA	0.0500 U	NA	NA	NA	NA	NA	NA	0.0500 U	NA	NA
	Aroclor 1242	5	10	1.0 U	0.0500 U	NA	NA	0.0500 U	NA	NA	NA	0.0500 U	NA	NA	NA	NA	NA	NA	0.0500 U	NA	NA
	Aroclor 1248	5	10	1.0 U	0.0500 U	NA	NA	0.0500 U	NA	NA	NA	0.0500 U	NA	NA	NA	NA	NA	NA	0.0500 U	NA	NA
	Aroclor 1254	5	10	1.0 U	0.0500 U	NA	NA	0.0500 U	NA	NA	NA	0.0500 U	NA	NA	NA	NA	NA	NA	0.0500 U	NA	NA
	Aroclor 1260	5	10	1.0 U	0.0500 U	NA	NA	0.0500 U	NA	NA	NA	0.0500 U	NA	NA	NA	NA	NA	NA	0.0500 U	NA	NA
	Total PCB Amount	5	10	1.0 U	0.0500 U	NA	NA	0.0500 U	NA	NA	NA	0.0500 U	NA	NA	NA	NA	NA	NA	0.0500 U	NA	NA
Metals, total																					
(ug/L)	Antimony	NS	8,000	40.0 U	40 U	NA	NA	40 U	NA	NA	NA	40 U	NA	NA	NA	NA	NA	NA	40 U	NA	NA
	Arsenic	NS	900	5.0 U	**9.2**	NA	NA	**11**	NA	NA	NA	**10**	NA	NA	NA	NA	NA	NA	**5.8**	NA	NA
	Barium	NS	50,000	**288**	**98**	NA	NA	**76**	NA	NA	NA	**140**	NA	NA	NA	NA	NA	NA	50 U	NA	NA
	Beryllium	NS	200	2.0 U	2.5 U	NA	NA	2.5 U	NA	NA	NA	2.5 U	NA	NA	NA	NA	NA	NA	2.5 U	NA	NA
	Cadmium	NS	4	**3.7**	2.5 U	NA	NA	2.5 U	NA	NA	NA	2.5 U	NA	NA	NA	NA	NA	NA	2.5 U	NA	NA
	Chromium	NS	300	**30.0**	5.0 U	NA	NA	5.0 U	NA	NA	NA	5.0 U	NA	NA	NA	NA	NA	NA	5.0 U	NA	NA
	Lead	NS	10	**50.8**	7.5 U	NA	NA	7.5 U	NA	NA	NA	**220**	NA	NA	NA	NA	NA	NA	7.5 U	NA	NA
	Mercury	NS	20	**0.36**	0.10 U	NA	NA	0.10 U	NA	NA	NA	0.10 U	NA	NA	NA	NA	NA	NA	0.10 U	NA	NA
	Nickel	NS	200	**26.0**	5.0 U	NA	NA	5.0 U	NA	NA	NA	5.0 U	NA	NA	NA	NA	NA	NA	5.0 U	NA	NA
	Selenium	NS	100	30.0 U	25 U	NA	NA	25 U	NA	NA	NA	25 U	NA	NA	NA	NA	NA	NA	25 U	NA	NA
	Silver	NS	7	3.0 U	2.5 U	NA	NA	2.5 U	NA	NA	NA	2.5 U	NA	NA	NA	NA	NA	NA	2.5 U	NA	NA
	Thallium	NS	3,000	30.0 U	30 U	NA	NA	30 U	NA	NA	NA	30 U	NA	NA	NA	NA	NA	NA	30 U	NA	NA
	Vanadium	NS	4,000	25.0 U	25 U	NA	NA	25 U	NA	NA	NA	25 U	NA	NA	NA	NA	NA	NA	25 U	NA	NA
	Zinc	NS	900	**1,870**	**260**	NA	NA	**51**	NA	NA	NA	**150**	NA	NA	NA	NA	NA	NA	**21**	NA	NA
Metals, dissolved																					
(ug/L)	Antimony	NS	8,000	NA	40 U	NA	NA	40 U	NA	NA	NA	40 U	NA	NA	NA	NA	NA	NA	40 U	NA	NA
	Arsenic	NS	900	NA	**6.5**	NA	NA	**8.9**	NA	NA	NA	**8.4**	NA	NA	NA	NA	NA	NA	**6.0**	NA	NA
	Barium	NS	50,000	NA	**79**	NA	NA	**73**	NA	NA	NA	**67**	NA	NA	NA	NA	NA	NA	50 U	NA	NA
	Beryllium	NS	200	NA	2.5 U	NA	NA	2.5 U	NA	NA	NA	2.5 U	NA	NA	NA	NA	NA	NA	2.5 U	NA	NA
	Cadmium	NS	4	NA	2.5 U	NA	NA	2.5 U	NA	NA	NA	2.5 U	NA	NA	NA	NA	NA	NA	2.5 U	NA	NA
	Chromium	NS	300	NA	5.0 U	NA	NA	5.0 U	NA	NA	NA	5.0 U	NA	NA	NA	NA	NA	NA	5.0 U	NA	NA
	Lead	NS	10	NA	7.5 U	NA	NA	7.5 U	NA	NA	NA	7.5 U	NA	NA	NA	NA	NA	NA	7.5 U	NA	NA
	Mercury	NS	20	NA	0.10 U	NA	NA	0.10 U	NA	NA	NA	0.10 U	NA	NA	NA	NA	NA	NA	0.10 U	NA	NA
	Nickel	NS	200	NA	5.0 U	NA	NA	5.0 U	NA	NA	NA	5.0 U	NA	NA	NA	NA	NA	NA	5.0 U	NA	NA
	Selenium	NS	100	NA	25 U	NA	NA	25 U	NA	NA	NA	25 U	NA	NA	NA	NA	NA	NA	25 U	NA	NA
	Silver	NS	7	NA	2.5 U	NA	NA	2.5 U	NA	NA	NA	2.5 U	NA	NA	NA	NA	NA	NA	2.5 U	NA	NA
	Thallium	NS	3,000	NA	30 U	NA	NA	30 U	NA	NA	NA	30 U	NA	NA	NA	NA	NA	NA	30 U	NA	NA
	Vanadium	NS	4,000	NA	25 U	NA	NA	25 U	NA	NA	NA	25 U	NA	NA	NA	NA	NA	NA	25 U	NA	NA
	Zinc	NS	900	NA	**160**	NA	NA	**43**	NA	NA	NA	**48**	NA	NA	NA	NA	NA	NA	**25**	NA	NA

Notes:
ug/L - micrograms per liter.
NA - Sample not analyzed for the listed analyte.
NS - No MassDEP standards exist for this compound.
U - Compound was not detected at specified quantitation limit.
Values in **Bold** indicate the compound was detected.
VOCs - Volatile Organic Compounds.
EPH - Extractable Petroleum Hydrocarbons.
PAHs - Polynuclear Aromatic Hydrocarbons.
PCBs - Polychlorinated Biphenyls.
(1) - MassDEP Method 1 standards for C9-C10 aromatic hydrocarbons used.
(2) - MassDEP Method 1 standards for 1,3-Dichloropropene used.

Table 2
Summary of Analytical Results for Groundwater Samples -- 2008 through 2014
New Bedford High School
New Bedford, Massachusetts

Analysis	Analyte			Sample ID:	CLEAN OUT	MW-4						MW-5													MW-5D						
				Filter Size (micron)^:	N/A	N/A	N/A	N/A	N/A	N/A	N/A	N/A	N/A	N/A	N/A	N/A	N/A	N/A	N/A	N/A	N/A	N/A	N/A	N/A	N/A	N/A	N/A	N/A	N/A	N/A	N/A
				Sample Date:	4/28/2011	8/19/2008	8/19/2008	1/6/2010	2/17/2010	4/9/2010	9/13/2010	8/19/2008	1/6/2010	1/6/2010	2/17/2010	4/8/2010	9/10/2010	3/8/2011	4/11/2011	4/29/2011	8/24/2011	2/27/2012	4/10/2012	12/14/2012	9/10/2010	4/8/2011	4/28/2011	8/24/2011	2/27/2012	4/10/2012	12/14/2012
		GW-2	GW-3				Field Dup							Field Dup																	
VOCs																															
(ug/L)	Methylene Chloride	2,000	50,000		2.0 U	NA	NA	5.0 U	5.0 U	5.0 U	2.0 U	NA	5.0 U	5.0 U	5.0 U	5.0 U	2.0 U	2.0 U	2.0 U	2.0 U	2.0 U	2.0 U	2.0 U	2.0 U	2.0 U	2.0 U	2.0 U	2.0 U	2.0 U	2.0 U	2.0 U
	1,1-Dichloroethane	2,000	20,000		1.0 U	NA	NA	1.0 U	1.0 U	1.0 U	1.0 U	NA	1.0 U	1.0 U	1.0 U	1.0 U	1.0 U	1.0 U	1.0 U	1.0 U	1.0 U	1.0 U	1.0 U	1.0 U	1.0 U	1.0 U	1.0 U	1.0 U	1.0 U	1.0 U	1.0 U
	Chloroform	50	20,000		1.0 U	NA	NA	2.0 U	1.0 U	1.0 U	1.0 U	NA	2.0 U	2.0 U	1.0 U	1.0 U	1.0 U	1.0 U	1.0 U	1.0 U	1.0 U	1.0 U	1.0 U	1.0 U	1.0 U	1.0 U	1.0 U	1.0 U	1.0 U	1.0 U	1.0 U
	Carbon Tetrachloride	2	5,000		1.0 U	NA	NA	1.0 U	1.0 U	1.0 U	1.0 U	NA	1.0 U	1.0 U	1.0 U	1.0 U	1.0 U	1.0 U	1.0 U	1.0 U	1.0 U	1.0 U	1.0 U	1.0 U	1.0 U	1.0 U	1.0 U	1.0 U	1.0 U	1.0 U	1.0 U
	1,2-Dichloropropane	3	50,000		1.0 U	NA	NA	1.0 U	1.0 U	1.0 U	1.0 U	NA	1.0 U	1.0 U	1.0 U	1.0 U	1.0 U	1.0 U	1.0 U	1.0 U	1.0 U	1.0 U	1.0 U	1.0 U	1.0 U	1.0 U	1.0 U	1.0 U	1.0 U	1.0 U	1.0 U
	Chlorodibromomethane	20	50,000		1.0 U	NA	NA	10 U	1.0 U	1.0 U	1.0 U	NA	10 U	10 U	1.0 U	1.0 U	1.0 U	1.0 U	1.0 U	1.0 U	1.0 U	1.0 U	1.0 U	1.0 U	1.0 U	1.0 U	1.0 U	1.0 U	1.0 U	1.0 U	1.0 U
	1,1,2-Trichloroethane	900	50,000		1.0 U	NA	NA	1.0 U	1.0 U	1.0 U	1.0 U	NA	1.0 U	1.0 U	1.0 U	1.0 U	1.0 U	1.0 U	1.0 U	1.0 U	1.0 U	1.0 U	1.0 U	1.0 U	1.0 U	1.0 U	1.0 U	1.0 U	1.0 U	1.0 U	1.0 U
	Tetrachloroethylene	50	30,000		1.0 U	NA	NA	1.0 U	1.0 U	1.0 U	1.0 U	NA	1.0 U	1.0 U	1.0 U	1.0 U	1.0 U	1.0 U	1.0 U	1.0 U	1.0 U	1.0 U	1.0 U	1.0 U	1.0 U	1.0 U	1.0 U	1.0 U	1.0 U	1.0 U	1.0 U
	Chlorobenzene	200	1,000		1.0 U	NA	NA	1.0 U	1.0 U	1.0 U	1.0 U	NA	1.0 U	1.0 U	1.0 U	1.0 U	1.0 U	1.0 U	1.0 U	1.0 U	1.0 U	1.0 U	1.0 U	1.0 U	1.0 U	1.0 U	1.0 U	1.0 U	1.0 U	1.0 U	1.0 U
	Trichlorofluoromethane (Freon 11)	NS	NS		2.0 U	NA	NA	2.0 U	2.0 U	2.0 U	2.0 U	NA	2.0 U	2.0 U	2.0 U	2.0 U	2.0 U	2.0 U	2.0 U	2.0 U	2.0 U	2.0 U	2.0 U	2.0 U	2.0 U	2.0 U	2.0 U	2.0 U	2.0 U	2.0 U	2.0 U
	1,2-Dichloroethane	5	20,000		1.0 U	NA	NA	1.0 U	1.0 U	1.0 U	1.0 U	NA	1.0 U	1.0 U	1.0 U	1.0 U	1.0 U	1.0 U	1.0 U	1.0 U	1.0 U	1.0 U	1.0 U	1.0 U	1.0 U	1.0 U	1.0 U	1.0 U	1.0 U	1.0 U	1.0 U
	1,1,1-Trichloroethane	4,000	20,000		1.0 U	NA	NA	1.0 U	1.0 U	1.0 U	1.0 U	NA	1.0 U	1.0 U	1.0 U	1.0 U	1.0 U	1.0 U	1.0 U	1.0 U	1.0 U	1.0 U	1.0 U	1.0 U	1.0 U	1.0 U	1.0 U	1.0 U	1.0 U	1.0 U	1.0 U
	Bromodichloromethane	6	50,000		1.0 U	NA	NA	5.0 U	1.0 U	1.0 U	1.0 U	NA	5.0 U	5.0 U	1.0 U	1.0 U	1.0 U	1.0 U	1.0 U	1.0 U	1.0 U	1.0 U	1.0 U	1.0 U	1.0 U	1.0 U	1.0 U	1.0 U	1.0 U	1.0 U	1.0 U
	trans-1,3-Dichloropropene	10(2)	200(2)		0.50 U	NA	NA	5.0 U	0.50 U	0.50 U	0.50 U	NA	5.0 U	5.0 U	0.50 U	0.50 U	0.50 U	0.50 U	0.50 U	0.50 U	0.50 U	0.50 U	0.50 U	0.50 U	0.50 U	0.50 U	0.50 U	0.50 U	0.50 U	0.50 U	0.50 U
	cis-1,3-Dichloropropene	10(2)	200(2)		0.50 U	NA	NA	5.0 U	0.50 U	0.50 U	0.50 U	NA	5.0 U	5.0 U	0.50 U	0.50 U	0.50 U	0.50 U	0.50 U	0.50 U	0.50 U	0.50 U	0.50 U	0.50 U	0.50 U	0.50 U	0.50 U	0.50 U	0.50 U	0.50 U	0.50 U
	1,1-Dichloropropene	NS	NS		2.0 U	NA	NA	2.0 U	2.0 U	2.0 U	2.0 U	NA	2.0 U	2.0 U	2.0 U	2.0 U	2.0 U	2.0 U	2.0 U	2.0 U	2.0 U	2.0 U	2.0 U	2.0 U	2.0 U	2.0 U	2.0 U	2.0 U	2.0 U	2.0 U	2.0 U
	Bromoform	700	50,000		2.0 U	NA	NA	10 U	2.0 U	2.0 U	2.0 U	NA	10 U	10 U	2.0 U	2.0 U	2.0 U	2.0 U	2.0 U	2.0 U	2.0 U	2.0 U	2.0 U	2.0 U	2.0 U	2.0 U	2.0 U	2.0 U	2.0 U	2.0 U	2.0 U
	1,1,2,2-Tetrachloroethane	9	50,000		1.0 U	NA	NA	0.50 U	1.0 U	1.0 U	1.0 U	NA	0.50 U	0.50 U	1.0 U	1.0 U	1.0 U	1.0 U	1.0 U	1.0 U	1.0 U	1.0 U	1.0 U	1.0 U	1.0 U	1.0 U	1.0 U	1.0 U	1.0 U	1.0 U	1.0 U
	Benzene	1,000	10,000		1.0 U	NA	NA	1.0 U	1.0 U	1.0 U	1.0 U	NA	1.0 U	1.0 U	1.0 U	1.0 U	1.0 U	1.0 U	1.0 U	1.0 U	0.50 U	0.50 U	0.50 U	0.50 U	1.0 U	1.0 U	1.0 U	0.50 U	0.50 U	0.50 U	0.50 U
	Toluene	50,000	40,000		1.0 U	NA	NA	1.0 U	1.0 U	1.0 U	1.0 U	NA	1.0 U	1.0 U	1.0 U	1.0 U	1.0 U	1.0 U	1.0 U	1.0 U	1.0 U	1.0 U	1.0 U	1.0 U	1.0 U	1.0 U	1.0 U	1.0 U	1.0 U	1.0 U	1.0 U
	Ethylbenzene	20,000	5,000		1.0 U	NA	NA	1.0 U	1.0 U	1.0 U	1.0 U	NA	1.0 U	1.0 U	1.0 U	1.0 U	1.0 U	1.0 U	1.0 U	1.0 U	1.0 U	1.0 U	1.0 U	1.0 U	1.0 U	1.0 U	1.0 U	1.0 U	1.0 U	1.0 U	1.0 U
	Chloromethane	NS	NS		2.0 U	NA	NA	2.0 U	2.0 U	2.0 U	2.0 U	NA	2.0 U	2.0 U	2.0 U	2.0 U	2.0 U	2.0 U	2.0 U	2.0 U	2.0 U	2.0 U	2.0 U	2.0 U	2.0 U	2.0 U	2.0 U	2.0 U	2.0 U	2.0 U	2.0 U
	Bromomethane	7	800		2.0 U	NA	NA	2.0 U	5.0 U	5.0 U	2.0 U	NA	2.0 U	2.0 U	5.0 U	5.0 U	2.0 U	2.0 U	2.0 U	2.0 U	2.0 U	2.0 U	2.0 U	2.0 U	2.0 U	2.0 U	2.0 U	2.0 U	2.0 U	2.0 U	2.0 U
	Vinyl Chloride	2	50,000		1.0 U	NA	NA	2.0 U	1.0 U	1.0 U	1.0 U	NA	2.0 U	2.0 U	1.0 U	1.0 U	1.0 U	1.0 U	1.0 U	1.0 U	1.0 U	1.0 U	1.0 U	1.0 U	1.0 U	1.0 U	1.0 U	1.0 U	1.0 U	1.0 U	1.0 U
	Chloroethane	NS	NS		2.0 U	NA	NA	2.0 U	2.0 U	2.0 U	2.0 U	NA	2.0 U	2.0 U	2.0 U	2.0 U	2.0 U	2.0 U	2.0 U	2.0 U	2.0 U	2.0 U	2.0 U	2.0 U	2.0 U	2.0 U	2.0 U	2.0 U	2.0 U	2.0 U	2.0 U
	1,1-Dichloroethylene	80	30,000		1.0 U	NA	NA	1.0 U	1.0 U	1.0 U	1.0 U	NA	1.0 U	1.0 U	1.0 U	1.0 U	1.0 U	1.0 U	1.0 U	1.0 U	1.0 U	1.0 U	1.0 U	1.0 U	1.0 U	1.0 U	1.0 U	1.0 U	1.0 U	1.0 U	1.0 U
	trans-1,2-Dichloroethylene	80	50,000		1.0 U	NA	NA	1.0 U	1.0 U	1.0 U	1.0 U	NA	1.0 U	1.0 U	1.0 U	1.0 U	1.0 U	1.0 U	1.0 U	1.0 U	1.0 U	1.0 U	1.0 U	1.0 U	1.0 U	1.0 U	1.0 U	1.0 U	1.0 U	1.0 U	1.0 U
	Trichloroethylene	5	5,000		1.0 U	NA	NA	1.0 U	1.0 U	1.0 U	1.0 U	NA	1.0 U	1.0 U	1.0 U	1.0 U	1.0 U	1.0 U	**2.8**	**2.1**	**4.4**	1.0 U	**5.3**	**2.9**	**1.8**	**1.1**	**3.4**	**3.5**	**31**	**7.5**	**5.9**	**1.1**
	1,2-Dichlorobenzene	8,000	2,000		1.0 U	NA	NA	1.0 U	1.0 U	1.0 U	1.0 U	NA	1.0 U	1.0 U	1.0 U	1.0 U	1.0 U	1.0 U	1.0 U	1.0 U	1.0 U	1.0 U	1.0 U	1.0 U	1.0 U	1.0 U	1.0 U	1.0 U	1.0 U	1.0 U	1.0 U	1.0 U
	1,3-Dichlorobenzene	6,000	50,000		1.0 U	NA	NA	1.0 U	1.0 U	1.0 U	1.0 U	NA	1.0 U	1.0 U	1.0 U	1.0 U	1.0 U	1.0 U	1.0 U	1.0 U	1.0 U	1.0 U	1.0 U	1.0 U	1.0 U	1.0 U	1.0 U	1.0 U	1.0 U	1.0 U	1.0 U
	1,4-Dichlorobenzene	60	8,000		1.0 U	NA	NA	1.0 U	1.0 U	1.0 U	1.0 U	NA	1.0 U	1.0 U	1.0 U	1.0 U	1.0 U	1.0 U	1.0 U	1.0 U	1.0 U	1.0 U	1.0 U	1.0 U	1.0 U	1.0 U	1.0 U	1.0 U	1.0 U	1.0 U	1.0 U
	Methyl tert-Butyl Ether (MTBE)	50,000	50,000		2.0 U	NA	NA	1.0 U	2.0 U	2.0 U	2.0 U	NA	1.0 U	1.0 U	2.0 U	2.0 U	2.0 U	2.0 U	2.0 U	2.0 U	2.0 U	2.0 U	2.0 U	2.0 U	2.0 U	2.0 U	2.0 U	2.0 U	2.0 U	2.0 U	2.0 U
	m+p Xylene	2	50,000		2.0 U	NA	NA	2.0 U	2.0 U	2.0 U	2.0 U	NA	2.0 U	2.0 U	2.0 U	2.0 U	2.0 U	2.0 U	2.0 U	2.0 U	2.0 U	2.0 U	2.0 U	2.0 U	2.0 U	2.0 U	2.0 U	2.0 U	2.0 U	2.0 U	2.0 U
	o-Xylene	2	50,000		1.0 U	NA	NA	1.0 U	1.0 U	1.0 U	1.0 U	NA	1.0 U	1.0 U	1.0 U	1.0 U	1.0 U	1.0 U	1.0 U	1.0 U	1.0 U	1.0 U	1.0 U	1.0 U	1.0 U	1.0 U	1.0 U	1.0 U	1.0 U	1.0 U	1.0 U
	cis-1,2-Dichloroethylene	20	50,000		1.0 U	NA	NA	1.0 U	1.0 U	1.0 U	1.0 U	NA	**3.7**	**4.1**	**5.9**	**3.2**	**7.1**	**3.8**	**4.0**	**5.1**	**3.1**	**8.3**	**4.0**	**9.7**	1.0 U	1.0 U	1.0 U	**6.3**	**7.4**	**5.7**	**1.3**
	Dibromomethane	NS	NS		2.0 U	NA	NA	1.0 U	2.0 U	2.0 U	2.0 U	NA	1.0 U	1.0 U	2.0 U	2.0 U	2.0 U	2.0 U	2.0 U	2.0 U	2.0 U	2.0 U	2.0 U	2.0 U	2.0 U	2.0 U	2.0 U	2.0 U	2.0 U	2.0 U	2.0 U
	1,2,3-Trichloropropane	NS	NS		2.0 U	NA	NA	2.0 U	2.0 U	2.0 U	2.0 U	NA	2.0 U	2.0 U	2.0 U	2.0 U	2.0 U	2.0 U	2.0 U	2.0 U	2.0 U	2.0 U	2.0 U	2.0 U	2.0 U	2.0 U	2.0 U	2.0 U	2.0 U	2.0 U	2.0 U
	Styrene	100	6,000		1.0 U	NA	NA	1.0 U	1.0 U	1.0 U	1.0 U	NA	1.0 U	1.0 U	1.0 U	1.0 U	1.0 U	1.0 U	1.0 U	1.0 U	1.0 U	1.0 U	1.0 U	1.0 U	1.0 U	1.0 U	1.0 U	1.0 U	1.0 U	1.0 U	1.0 U
	Dichlorodifluoromethane (Freon 12)	NS	NS		2.0 U	NA	NA	2.0 U	2.0 U	2.0 U	2.0 U	NA	2.0 U	2.0 U	2.0 U	2.0 U	2.0 U	2.0 U	2.0 U	2.0 U	2.0 U	2.0 U	2.0 U	2.0 U	2.0 U	2.0 U	2.0 U	2.0 U	2.0 U	2.0 U	2.0 U
	Acetone	50,000	50,000		5.0 U	NA	NA	50 U	5.0 U	5.0 U	5.0 U	NA	50 U	50 U	5.0 U	5.0 U	5.0 U	5.0 U	5.0 U	5.0 U	5.0 U	5.0 U	5.0 U	5.0 U	5.0 U	5.0 U	5.0 U	5.0 U	5.0 U	5.0 U	5.0 U
	Carbon Disulfide	NS	NS		2.0 U	NA	NA	5.0 U	2.0 U	2.0 U	2.0 U	NA	5.0 U	5.0 U	2.0 U	2.0 U	2.0 U	2.0 U	2.0 U	2.0 U	2.0 U	2.0 U	2.0 U	2.0 U	2.0 U	2.0 U	2.0 U	2.0 U	2.0 U	2.0 U	2.0 U
	2-Butanone (MEK)	50,000	50,000		5.0 U	NA	NA	20 U	5.0 U	5.0 U	5.0 U	NA	20 U	20 U	5.0 U	5.0 U	5.0 U	5.0 U	5.0 U	5.0 U	5.0 U	5.0 U	5.0 U	5.0 U	5.0 U	5.0 U	5.0 U	5.0 U	5.0 U	5.0 U	5.0 U
	4-Methyl-2-pentanone (MIBK)	50,000	50,000		5.0 U	NA	NA	10 U	5.0 U	5.0 U	5.0 U	NA	10 U	10 U	5.0 U	5.0 U	5.0 U	5.0 U	5.0 U	5.0 U	5.0 U	5.0 U	5.0 U	5.0 U	5.0 U	5.0 U	5.0 U	5.0 U	5.0 U	5.0 U	5.0 U
	2-Hexanone (MBK)	NS	NS		5.0 U	NA	NA	10 U	5.0 U	5.0 U	5.0 U	NA	10 U	10 U	5.0 U	5.0 U	5.0 U	5.0 U	5.0 U	5.0 U	5.0 U	5.0 U	5.0 U	5.0 U	5.0 U	5.0 U	5.0 U	5.0 U	5.0 U	5.0 U	5.0 U
	Bromochloromethane	NS	NS		2.0 U	NA	NA	1.0 U	2.0 U	2.0 U	2.0 U	NA	1.0 U	1.0 U	2.0 U	2.0 U	2.0 U	2.0 U	2.0 U	2.0 U	2.0 U	2.0 U	2.0 U	2.0 U	2.0 U	2.0 U	2.0 U	2.0 U	2.0 U	2.0 U	2.0 U
	Tetrahydrofuran	NS	NS		5.0 U	NA	NA	10 U	10 U	10 U	10 U	NA	10 U	10 U	10 U	10 U	10 U	5.0 U	5.0 U	5.0 U	5.0 U	5.0 U	5.0 U	5.0 U	10 U	5.0 U	5.0 U	5.0 U	5.0 U	5.0 U	5.0 U
	2,2-Dichloropropane	NS	NS		2.0 U	NA	NA	1.0 U	2.0 U	2.0 U	2.0 U	NA	1.0 U	1.0 U	2.0 U	2.0 U	2.0 U	2.0 U	2.0 U	2.0 U	2.0 U	2.0 U	2.0 U	2.0 U	2.0 U	2.0 U	2.0 U	2.0 U	2.0 U	2.0 U	2.0 U
	1,2-Dibromoethane (EDB)	2	50,000		2.0 U	NA	NA	0.50 U	2.0 U	2.0 U	2.0 U	NA	0.50 U	0.50 U	2.0 U	2.0 U	2.0 U	2.0 U	2.0 U	2.0 U	2.0 U	2.0 U	2.0 U	2.0 U	2.0 U	2.0 U	2.0 U	2.0 U	2.0 U	2.0 U	2.0 U
	1,3-Dichloropropane	NS	NS		2.0 U	NA	NA	0.50 U	2.0 U	2.0 U	2.0 U	NA	0.50 U	0.50 U	2.0 U	2.0 U	2.0 U	2.0 U	2.0 U	2.0 U	2.0 U	2.0 U	2.0 U	2.0 U	2.0 U	2.0 U	2.0 U	2.0 U	2.0 U	2.0 U	2.0 U
	1,1,1,2-Tetrachloroethane	10	50,000		1.0 U	NA	NA	5.0 U	1.0 U	1.0 U	1.0 U	NA	5.0 U	5.0 U	1.0 U	1.0 U	1.0 U	1.0 U	1.0 U	1.0 U	1.0 U	1.0 U	1.0 U	1.0 U	1.0 U	1.0 U	1.0 U	1.0 U	1.0 U	1.0 U	1.0 U
	Bromobenzene	NS	NS		2.0 U	NA	NA	1.0 U	2.0 U	2.0 U	2.0 U	NA	1.0 U	1.0 U	2.0 U	2.0 U	2.0 U	2.0 U	2.0 U	2.0 U	2.0 U	2.0 U	2.0 U	2.0 U	2.0 U	2.0 U	2.0 U	2.0 U	2.0 U	2.0 U	2.0 U
	n-Butylbenzene	4,000(3)	50,000(3)		2.0 U	NA	NA	1.0 U	2.0 U	2.0 U	2.0 U	NA	1.0 U	1.0 U	2.0 U	2.0 U	2.0 U	2.0 U	2.0 U	2.0 U	2.0 U	2.0 U	2.0 U	2.0 U	2.0 U	2.0 U	2.0 U	2.0 U	2.0 U	2.0 U	2.0 U
	sec-Butylbenzene	4,000(3)	50,000(3)		2.0 U	NA	NA	1.0 U	2.0 U	2.0 U	2.0 U	NA	1.0 U	1.0 U	2.0 U	2.0 U	2.0 U	2.0 U	2.0 U	2.0 U	2.0 U	2.0 U	2.0 U	2.0 U	2.0 U	2.0 U	2.0 U	2.0 U	2.0 U	2.0 U	2.0 U
	tert-Butylbenzene	4,000(3)	50,000(3)		2.0 U	NA	NA	1.0 U	2.0 U	2.0 U	2.0 U	NA	1.0 U	1.0 U	2.0 U	2.0 U	2.0 U	2.0 U	2.0 U	2.0 U	2.0 U	2.0 U	2.0 U	2.0 U	2.0 U	2.0 U	2.0 U	2.0 U	2.0 U	2.0 U	2.0 U
	2-Chlorotoluene	NS	NS		2.0 U	NA	NA	1.0 U	2.0 U	2.0 U	2.0 U	NA	1.0 U	1.0 U	2.0 U	2.0 U	2.0 U	2.0 U	2.0 U	2.0 U	2.0 U	2.0 U	2.0 U	2.0 U	2.0 U	2.0 U	2.0 U	2.0 U	2.0 U	2.0 U	2.0 U
	4-Chlorotoluene	NS	NS		2.0 U	NA	NA	1.0 U	2.0 U	2.0 U	2.0 U	NA	1.0 U	1.0 U	2.0 U	2.0 U	2.0 U	2.0 U	2.0 U	2.0 U	2.0 U	2.0 U	2.0 U	2.0 U	2.0 U	2.0 U	2.0 U	2.0 U	2.0 U	2.0 U	2.0 U
	1,2-Dibromo-3-chloropropane (DBCP)	NS	NS		2.0 U	NA	NA	10 U	5.0 U	5.0 U	2.0 U	NA	10 U	10 U	5.0 U	5.0 U	2.0 U	2.0 U	2.0 U	2.0 U	2.0 U	2.0 U	2.0 U	2.0 U	2.0 U	2.0 U	2.0 U	2.0 U	2.0 U	2.0 U	2.0 U
	Hexachlorobutadiene	50	3,000		0.60 U	NA	NA	1.0 U	0.60 U	0.60 U	0.60 U	NA	1.0 U	1.0 U	0.60 U	0.60 U	0.60 U	0.60 U	0.60 U	0.60 U	0.60 U	0.60 U	0.60 U	0.60 U	0.60 U	0.60 U	0.60 U	0.60 U	0.60 U	0.60 U	0.60 U
	Isopropylbenzene (Cumene)	4,000(3)	50,000(3)		2.0 U	NA	NA	1.0 U	2.0 U	2.0 U	2.0 U	NA	1.0 U	1.0 U	2.0 U	2.0 U	2.0 U	2.0 U	2.0 U	2.0 U	2.0 U	2.0 U	2.0 U	2.0 U	2.0 U	2.0 U	2.0 U	2.0 U	2.0 U	2.0 U	2.0 U
	p-Isopropyltoluene (p-Cymene)	4,000(3)	50,000(3)		2.0 U	NA	NA	1.0 U	2.0 U	2.0 U	2.0 U	NA	1.0 U	1.0 U	2.0 U	2.0 U	2.0 U	2.0 U	2.0 U	2.0 U	2.0 U	2.0 U	2.0 U	2.0 U	2.0 U	2.0 U	2.0 U	2.0 U	2.0 U	2.0 U	2.0 U
	Naphthalene	700	20,000		2.0 U	NA	NA	2.0 U	5.0 U	5.0 U	2.0 U	NA	2.0 U	2.0 U	5.0 U	5.0 U	5.0 U	2.0 U	2.0 U	2.0 U	2.0 U	2.0 U	2.0 U	2.0 U	5.0 U	2.0 U	2.0 U	2.0 U	2.0 U	2.0 U	2.0 U
	n-Propylbenzene	4,000(3)	50,000(3)		2.0 U	NA	NA	1.0 U	2.0 U	2.0 U	2.0 U	NA	1.0 U	1.0 U	2.0 U	2.0 U	2.0 U	2.0 U	2.0 U	2.0 U	2.0 U	2.0 U	2.0 U	2.0 U	2.0 U	2.0 U	2.0 U	2.0 U	2.0 U	2.0 U	2.0 U
	1,2,3-Trichlorobenzene	NS	NS		2.0 U	NA	NA	5.0 U	2.0 U	2.0 U	2.0 U	NA	5.0 U	5.0 U	2.0 U	2.0 U	2.0 U	2.0 U	2.0 U	2.0 U	2.0 U	2.0 U	2.0 U	2.0 U	2.0 U	2.0 U	2.0 U	2.0 U	2.0 U	2.0 U	2.0 U
	1,2,4-Trichlorobenzene	200	50,000		2.0 U	NA	NA	1.0 U	2.0 U	2.0 U	2.0 U	NA	1.0 U	1.0 U	2.0 U	2.0 U	2.0 U	2.0 U	2.0 U	2.0 U	2.0 U	2.0 U	2.0 U	2.0 U	2.0 U	2.0 U	2.0 U	2.0 U	2.0 U	2.0 U	2.0 U
	1,3,5-Trimethylbenzene	4,000(3)	50,000(3)		2.0 U	NA	NA	1.0 U	2.0 U	2.0 U	2.0 U	NA	1.0 U	1.0 U	2.0 U	2.0 U	2.0 U	2.0 U	2.0 U	2.0 U	2.0 U	2.0 U	2.0 U	2.0 U	2.0 U	2.0 U	2.0 U	2.0 U	2.0 U	2.0 U	2.0 U
	1,2,4-Trimethylbenzene	4,000(3)	50,000(3)		2.0 U	NA	NA	1.0 U	2.0 U	2.0 U	2.0 U	NA	1.0 U	1.0 U	2.0 U	2.0 U	2.0 U	2.0 U	2.0 U	2.0 U	2.0 U	2.0 U	2.0 U	2.0 U	2.0 U	2.0 U	2.0 U	2.0 U	2.0 U	2.0 U	2.0 U
	Diethyl Ether	NS	NS		2.0 U	NA	NA	2.0 U	2.0 U	2.0 U	2.0 U	NA	2.0 U	2.0 U	2.0 U	2.0 U	2.0 U	2.0 U	2.0 U	2.0 U	2.0 U	2.0 U	2.0 U	2.0 U	2.0 U	2.0 U	2.0 U	2.0 U	2.0 U	2.0 U	2.0 U
	Diisopropyl Ether (DIPE)	NS	NS		2.0 U	NA	NA	0.50 U	2.0 U	2.0 U	2.0 U	NA	0.50 U	0.50 U	2.0 U	2.0 U	2.0 U	2.0 U	2.0 U	2.0 U	2.0 U	2.0 U	2.0 U	2.0 U	2.0 U	2.0 U	2.0 U	2.0 U	2.0 U	2.0 U	2.0 U
	tert-Butyl Ethyl Ether (TBEE)	NS	NS		2.0 U	NA	NA	0.50 U	2.0 U	2.0 U	2.0 U	NA	0.50 U	0.50 U	2.0 U	2.0 U	2.0 U	2.0 U	2.0 U	2.0 U	2.0 U	2.0 U	2.0 U	2.0 U	2.0 U	2.0 U	2.0 U	2.0 U	2.0 U	2.0 U	2.0 U
	tert-Amyl Methyl Ether (TAME)	NS	NS		2.0 U	NA	NA	0.50 U	2.0 U	2.0 U	2.0 U	NA	0.50 U	0.50 U	2.0 U	2.0 U	2.0 U	2.0 U	2.0 U	2.0 U	2.0 U	2.0 U	2.0 U	2.0 U	2.0 U	2.0 U	2.0 U	2.0 U	2.0 U	2.0 U	2.0 U
	1,4-Dioxane	6,000	50,000		250 U	NA	NA	50 U	250 U	250 U	250 U	NA	50 U	50 U	250 U	250 U	250 U	250 U	250 U	250 U	250 U	250 U	250 U	250 U	250 U	250 U	250 U	250 U	250 U	250 U	250 U

Table 2
Summary of Analytical Results for Groundwater Samples -- 2008 through 2014
New Bedford High School
New Bedford, Massachusetts

Analysis	Analyte		Sample ID:	CLEAN OUT	MW-4						MW-5													MW-5D						
		Filter Size (micron)^:		N/A	N/A	N/A	N/A	N/A	N/A	N/A	N/A	N/A	N/A	N/A	N/A	N/A	N/A	N/A	N/A	N/A	N/A	N/A	N/A	N/A	N/A	N/A	N/A	N/A	N/A	N/A
		Sample Date:		4/28/2011	8/19/2008	8/19/2008	1/6/2010	2/17/2010	4/9/2010	9/13/2010	8/19/2008	1/6/2010	1/6/2010	2/17/2010	4/8/2010	9/10/2010	3/8/2011	4/11/2011	4/29/2011	8/24/2011	2/27/2012	4/10/2012	12/14/2012	9/10/2010	4/8/2011	4/28/2011	8/24/2011	2/27/2012	4/10/2012	12/14/2012
		GW-2	GW-3			Field Dup							Field Dup																	
PAHs																														
(ug/L)	Acenaphthene	NS	10,000	NA	0.30 U	0.30 U	NA	NA	NA	NA	0.30 U	NA	NA	NA	NA	NA	NA	NA	NA	NA	NA	NA	NA	NA	NA	NA	NA	NA	NA	NA
	Acenaphthylene	10,000	40	NA	0.30 U	0.30 U	NA	NA	NA	NA	0.30 U	NA	NA	NA	NA	NA	NA	NA	NA	NA	NA	NA	NA	NA	NA	NA	NA	NA	NA	NA
	Anthracene	NS	30	NA	0.20 U	0.20 U	NA	NA	NA	NA	0.20 U	NA	NA	NA	NA	NA	NA	NA	NA	NA	NA	NA	NA	NA	NA	NA	NA	NA	NA	NA
	Benzo(a)anthracene	NS	1,000	NA	0.05 U	0.05 U	NA	NA	NA	NA	0.05 U	NA	NA	NA	NA	NA	NA	NA	NA	NA	NA	NA	NA	NA	NA	NA	NA	NA	NA	NA
	Benzo(a)pyrene	NS	500	NA	0.10 U	0.10 U	NA	NA	NA	NA	0.10 U	NA	NA	NA	NA	NA	NA	NA	NA	NA	NA	NA	NA	NA	NA	NA	NA	NA	NA	NA
	Benzo(b)fluoranthene	NS	400	NA	0.05 U	0.05 U	NA	NA	NA	NA	0.05 U	NA	NA	NA	NA	NA	NA	NA	NA	NA	NA	NA	NA	NA	NA	NA	NA	NA	NA	NA
	Benzo(g,h,i)perylene	NS	20	NA	0.50 U	0.50 U	NA	NA	NA	NA	0.50 U	NA	NA	NA	NA	NA	NA	NA	NA	NA	NA	NA	NA	NA	NA	NA	NA	NA	NA	NA
	Benzo(k)fluoranthene	NS	100	NA	0.20 U	0.20 U	NA	NA	NA	NA	0.20 U	NA	NA	NA	NA	NA	NA	NA	NA	NA	NA	NA	NA	NA	NA	NA	NA	NA	NA	NA
	Chrysene	NS	70	NA	0.20 U	0.20 U	NA	NA	NA	NA	0.20 U	NA	NA	NA	NA	NA	NA	NA	NA	NA	NA	NA	NA	NA	NA	NA	NA	NA	NA	NA
	Dibenz(a,h)anthracene	NS	40	NA	0.50 U	0.50 U	NA	NA	NA	NA	0.50 U	NA	NA	NA	NA	NA	NA	NA	NA	NA	NA	NA	NA	NA	NA	NA	NA	NA	NA	NA
	Fluoranthene	NS	200	NA	0.50 U	0.50 U	NA	NA	NA	NA	0.50 U	NA	NA	NA	NA	NA	NA	NA	NA	NA	NA	NA	NA	NA	NA	NA	NA	NA	NA	NA
	Fluorene	NS	40	NA	1.0 U	1.0 U	NA	NA	NA	NA	1.0 U	NA	NA	NA	NA	NA	NA	NA	NA	NA	NA	NA	NA	NA	NA	NA	NA	NA	NA	NA
	Indeno(1,2,3-cd)pyrene	NS	100	NA	0.50 U	0.50 U	NA	NA	NA	NA	0.50 U	NA	NA	NA	NA	NA	NA	NA	NA	NA	NA	NA	NA	NA	NA	NA	NA	NA	NA	NA
	2-Methylnaphthalene	2,000	20,000	NA	1.0 U	1.0 U	NA	NA	NA	NA	1.0 U	NA	NA	NA	NA	NA	NA	NA	NA	NA	NA	NA	NA	NA	NA	NA	NA	NA	NA	NA
	Naphthalene	700	20,000	NA	1.0 U	1.0 U	NA	NA	NA	NA	1.0 U	NA	NA	NA	NA	NA	NA	NA	NA	NA	NA	NA	NA	NA	NA	NA	NA	NA	NA	NA
	Phenanthrene	NS	10,000	NA	0.05 U	0.05 U	NA	NA	NA	NA	**0.18**	NA	NA	NA	NA	NA	NA	NA	NA	NA	NA	NA	NA	NA	NA	NA	NA	NA	NA	NA
	Pyrene	NS	20	NA	1.0 U	1.0 U	NA	NA	NA	NA	1.0 U	NA	NA	NA	NA	NA	NA	NA	NA	NA	NA	NA	NA	NA	NA	NA	NA	NA	NA	NA
PCBs																														
(ug/L)	Aroclor 1016	5	10	NA	0.0500 U	0.0500 U	NA	NA	NA	NA	0.0500 U	NA	NA	NA	NA	NA	NA	NA	NA	0.0521 U	0.050 U	0.0500 U	0.25 U	NA	NA	NA	0.0500 U	0.050 U	0.0500 U	0.25 U
	Aroclor 1221	5	10	NA	0.0500 U	0.0500 U	NA	NA	NA	NA	0.0500 U	NA	NA	NA	NA	NA	NA	NA	NA	0.0521 U	0.050 U	**0.0202 J**	0.25 U	NA	NA	NA	0.0500 U	0.050 U	0.0500 U	0.25 U
	Aroclor 1232	5	10	NA	0.0500 U	0.0500 U	NA	NA	NA	NA	0.0500 U	NA	NA	NA	NA	NA	NA	NA	NA	0.0521 U	0.050 U	0.0500 U	0.25 U	NA	NA	NA	0.0500 U	0.050 U	0.0500 U	0.25 U
	Aroclor 1242	5	10	NA	0.0500 U	0.0500 U	NA	NA	NA	NA	0.0500 U	NA	NA	NA	NA	NA	NA	NA	NA	0.0521 U	0.050 U	0.0500 U	0.25 U	NA	NA	NA	0.0500 U	0.050 U	0.0500 U	0.25 U
	Aroclor 1248	5	10	NA	0.0500 U	0.0500 U	NA	NA	NA	NA	0.0500 U	NA	NA	NA	NA	NA	NA	NA	NA	**0.129**	**0.0595**	**0.0727 J**	0.25 U	NA	NA	NA	0.0500 U	0.050 U	0.0500 U	0.25 U
	Aroclor 1254	5	10	NA	0.0500 U	0.0500 U	NA	NA	NA	NA	**0.0731 J**	NA	NA	NA	NA	NA	NA	NA	NA	0.0521 U	**0.0319 J**	**0.0373 J**	0.25 U	NA	NA	NA	0.0500 U	**0.0283 J**	0.0500 U	0.25 U
	Aroclor 1260	5	10	NA	0.0500 U	0.0500 U	NA	NA	NA	NA	0.0500 U	NA	NA	NA	NA	NA	NA	NA	NA	0.0521 U	0.050 U	0.0500 U	0.25 U	NA	NA	NA	0.0500 U	0.050 U	0.0500 U	0.25 U
	Aroclor 1262	5	10	NA	NA	NA	NA	NA	NA	NA	NA	NA	NA	NA	NA	NA	NA	NA	NA	NA	NA	NA	0.25 U	NA	NA	NA	NA	NA	NA	0.25 U
	Aroclor 1268	5	10	NA	NA	NA	NA	NA	NA	NA	NA	NA	NA	NA	NA	NA	NA	NA	NA	NA	NA	NA	0.25 U	NA	NA	NA	NA	NA	NA	0.25 U
	Total PCBs	5	10	NA	0.0500 U	0.0500 U	NA	NA	NA	NA	**0.0731 J**	NA	NA	NA	NA	NA	NA	NA	NA	**0.129**	**0.0914 J**	**0.1302 J**	0.25 U	NA	NA	NA	0.0500 U	**0.0283 J**	0.0500 U	0.25 U
Total Petroleum Hydrocarbons																														
(ug/L)	Total Petroleum Hydrocarbons (C9-C44	5,000	5,000	NA	NA	NA	NA	NA	NA	NA	NA	NA	NA	NA	NA	NA	NA	NA	NA	NA	NA	NA	NA	NA	NA	NA	NA	NA	NA	NA
Metals, total																														
(ug/L)	Antimony	NS	8,000	NA	3.0 U	3.0 U	NA	NA	NA	NA	3.0 U	NA	NA	NA	NA	NA	NA	NA	NA	NA	NA	NA	NA	NA	NA	NA	NA	NA	NA	NA
	Arsenic	NS	900	NA	**7.0**	5.0 U	NA	NA	NA	NA	**15.0**	NA	NA	NA	NA	NA	NA	NA	NA	NA	NA	NA	NA	NA	NA	NA	NA	NA	NA	NA
	Barium	NS	50,000	NA	50 U	50 U	NA	NA	NA	NA	**122**	NA	NA	NA	NA	NA	NA	NA	NA	NA	NA	NA	NA	NA	NA	NA	NA	NA	NA	NA
	Beryllium	NS	200	NA	2.0 U	2.0 U	NA	NA	NA	NA	2.0 U	NA	NA	NA	NA	NA	NA	NA	NA	NA	NA	NA	NA	NA	NA	NA	NA	NA	NA	NA
	Cadmium	NS	4	NA	2.5 U	2.5 U	NA	NA	NA	NA	2.5 U	NA	NA	NA	NA	NA	NA	NA	NA	NA	NA	NA	NA	NA	NA	NA	NA	NA	NA	NA
	Chromium	NS	300	NA	5.0 U	5.0 U	NA	NA	NA	NA	**52.0**	NA	NA	NA	NA	NA	NA	NA	NA	NA	NA	NA	NA	NA	NA	NA	NA	NA	NA	NA
	Lead	NS	10	NA	7.5 U	7.5 U	NA	NA	NA	NA	**19.2**	NA	NA	NA	NA	NA	NA	NA	NA	NA	NA	NA	NA	NA	NA	NA	NA	NA	NA	NA
	Mercury	NS	20	NA	0.10 U	0.10 U	NA	NA	NA	NA	0.10 U	NA	NA	NA	NA	NA	NA	NA	NA	NA	NA	NA	NA	NA	NA	NA	NA	NA	NA	NA
	Nickel	NS	200	NA	5.0 U	5.0 U	NA	NA	NA	NA	**20.0**	NA	NA	NA	NA	NA	NA	NA	NA	NA	NA	NA	NA	NA	NA	NA	NA	NA	NA	NA
	Selenium	NS	100	NA	30 U	30 U	NA	NA	NA	NA	30 U	NA	NA	NA	NA	NA	NA	NA	NA	NA	NA	NA	NA	NA	NA	NA	NA	NA	NA	NA
	Silver	NS	7	NA	3.0 U	3.0 U	NA	NA	NA	NA	**5.0**	NA	NA	NA	NA	NA	NA	NA	NA	NA	NA	NA	NA	NA	NA	NA	NA	NA	NA	NA
	Thallium	NS	3,000	NA	1.0 U	1.0 U	NA	NA	NA	NA	1.0 U	NA	NA	NA	NA	NA	NA	NA	NA	NA	NA	NA	NA	NA	NA	NA	NA	NA	NA	NA
	Vanadium	NS	4,000	NA	25 U	25 U	NA	NA	NA	NA	25 U	NA	NA	NA	NA	NA	NA	NA	NA	NA	NA	NA	NA	NA	NA	NA	NA	NA	NA	NA
	Zinc	NS	900	NA	**12.0**	**16.0**	NA	NA	NA	NA	**68.0**	NA	NA	NA	NA	NA	NA	NA	NA	NA	NA	NA	NA	NA	NA	NA	NA	NA	NA	NA
Metals, dissolved																														
(ug/L)	Antimony	NS	8,000	NA	3.0 U	3.0 U	NA	NA	NA	NA	3.0 U	NA	NA	NA	NA	NA	NA	NA	NA	NA	NA	NA	NA	NA	NA	NA	NA	NA	NA	NA
	Arsenic	NS	900	NA	10 U	10 U	NA	NA	NA	NA	**10**	NA	NA	NA	NA	NA	NA	NA	NA	NA	NA	NA	NA	NA	NA	NA	NA	NA	NA	NA
	Barium	NS	50,000	NA	50 U	50 U	NA	NA	NA	NA	**64.9**	NA	NA	NA	NA	NA	NA	NA	NA	NA	NA	NA	NA	NA	NA	NA	NA	NA	NA	NA
	Beryllium	NS	200	NA	2.0 U	2.0 U	NA	NA	NA	NA	2.0 U	NA	NA	NA	NA	NA	NA	NA	NA	NA	NA	NA	NA	NA	NA	NA	NA	NA	NA	NA
	Cadmium	NS	4	NA	2.5 U	2.5 U	NA	NA	NA	NA	2.5 U	NA	NA	NA	NA	NA	NA	NA	NA	NA	NA	NA	NA	NA	NA	NA	NA	NA	NA	NA
	Chromium	NS	300	NA	5.0 U	5.0 U	NA	NA	NA	NA	5.0 U	NA	NA	NA	NA	NA	NA	NA	NA	NA	NA	NA	NA	NA	NA	NA	NA	NA	NA	NA
	Lead	NS	10	NA	8.0 U	8.0 U	NA	NA	NA	NA	8.0 U	NA	NA	NA	NA	NA	NA	NA	NA	NA	NA	NA	NA	NA	NA	NA	NA	NA	NA	NA
	Mercury	NS	20	NA	0.10 U	0.10 U	NA	NA	NA	NA	0.10 U	NA	NA	NA	NA	NA	NA	NA	NA	NA	NA	NA	NA	NA	NA	NA	NA	NA	NA	NA
	Nickel	NS	200	NA	5.0 U	5.0 U	NA	NA	NA	NA	5.0 U	NA	NA	NA	NA	NA	NA	NA	NA	NA	NA	NA	NA	NA	NA	NA	NA	NA	NA	NA
	Selenium	NS	100	NA	30 U	30 U	NA	NA	NA	NA	30 U	NA	NA	NA	NA	NA	NA	NA	NA	NA	NA	NA	NA	NA	NA	NA	NA	NA	NA	NA
	Silver	NS	7	NA	2.5 U	2.5 U	NA	NA	NA	NA	2.5 U	NA	NA	NA	NA	NA	NA	NA	NA	NA	NA	NA	NA	NA	NA	NA	NA	NA	NA	NA
	Thallium	NS	3,000	NA	1.0 U	1.0 U	NA	NA	NA	NA	1.0 U	NA	NA	NA	NA	NA	NA	NA	NA	NA	NA	NA	NA	NA	NA	NA	NA	NA	NA	NA
	Vanadium	NS	4,000	NA	50 U	50 U	NA	NA	NA	NA	50 U	NA	NA	NA	NA	NA	NA	NA	NA	NA	NA	NA	NA	NA	NA	NA	NA	NA	NA	NA
	Zinc	NS	900	NA	**11**	**119**	NA	NA	NA	NA	**10**	NA	NA	NA	NA	NA	NA	NA	NA	NA	NA	NA	NA	NA	NA	NA	NA	NA	NA	NA
General Chemistry																														
(ug/L)	Nitrogen, Nitrate	NS	NS	NA	NA	NA	NA	NA	NA	NA	NA	NA	NA	NA	NA	100 U	NA	NA	NA	NA	NA	NA	NA	**280**	NA	NA	NA	NA	NA	NA
	Sulfate	NS	NS	NA	NA	NA	NA	NA	NA	NA	NA	NA	NA	NA	NA	10,000 U	NA	NA	NA	NA	NA	NA	NA	**10,000**	NA	NA	NA	NA	NA	NA
	Total Organic Carbon	NS	NS	NA	NA	NA	NA	NA	NA	NA	NA	NA	NA	NA	NA	**6,800**	NA	NA	NA	NA	NA	NA	NA	**2,900**	NA	NA	NA	NA	NA	NA

Notes:
ug/L - micrograms per liter.
B - Compound detected in associated method blank
J - Estimated value.
NA - Sample not analyzed for the listed analyte.
N/A - Not applicable.
NS - No MassDEP standards exist for this compound.
U - Compound was not detected at specified quantitation limit.
Values in **Bold** indicate the compound was detected.
VOCs - Volatile Organic Compounds.
PAHs - Polynuclear Aromatic Hydrocarbons.
PCBs - Polychlorinated Biphenyls.
(1) - MassDEP Method 1 standards for C9-C10 aromatic hydrocarbons used.
(2) - MassDEP Method 1 standards for 1,3-Dichloropropene used.
^ - 0.45 micron filtration done in field; 0.20 and 2.0 micron filtration performed in lab.
* - Sample collected on 4/10/2012 for PCB analysis was broken and was recollected on 4/18/2012.
** - Lab filtered sample using a 2.0 micron filter and then filtered a second time using a 0.20 micron filter.

Table 2
Summary of Analytical Results for Groundwater Samples -- 2008 through 2014
New Bedford High School
New Bedford, Massachusetts

Analysis	Analyte	Sample ID:		MW-6			MW-7							MW-7D		MW-8A	MW-8B	MW-11			MW-12	MW-13	MW-14	MW-15	MW-16		MW-17
		Filter Size (micron)^:		N/A	N/A	N/A	N/A	N/A	N/A	N/A	N/A	N/A	N/A	N/A	N/A	N/A	N/A	N/A	N/A	N/A	N/A	N/A	N/A	N/A	N/A	N/A	N/A
		Sample Date:		8/19/2008	1/7/2010	2/18/2010	9/16/2008	1/7/2010	2/17/2010	2/17/2010	4/7/2010	9/9/2010	10/22/2010	9/9/2010	9/9/2010	2/18/2010	9/16/2008	2/19/2010	4/7/2010	9/13/2010	2/18/2010	2/19/2010	2/19/2010	2/18/2010	2/19/2010	4/28/2011	2/18/2010
		GW-2	GW-3							Field Dup					Field Dup												
VOCs																											
(ug/L)	Methylene Chloride	2,000	50,000	NA	5.0 U	5.0 U	NA	5.0 U	5.0 U	5.0 U	5.0 U	2.0 U	2.0 U	2.0 U	2.0 U	5.0 U	NA	5.0 U	5.0 U	2.0 U	5.0 U	5.0 U	5.0 U	5.0 U	5.0 U	2.0 U	5.0 U
	1,1-Dichloroethane	2,000	20,000	NA	1.0 U	1.0 U	NA	1.0 U	1.0 U	1.0 U	1.0 U	1.0 U	1.0 U	**3.9**	**2.9**	1.0 U	NA	1.0 U	1.0 U	1.0 U	1.0 U	1.0 U	1.0 U	1.0 U	1.0 U	1.0 U	1.0 U
	Chloroform	50	20,000	NA	2.0 U	1.0 U	NA	2.0 U	1.0 U	1.0 U	1.0 U	1.0 U	1.0 U	1.0 U	1.0 U	1.0 U	NA	1.0 U	1.0 U	1.0 U	1.0 U	1.0 U	1.0 U	1.0 U	1.0 U	1.0 U	1.0 U
	Carbon Tetrachloride	2	5,000	NA	1.0 U	1.0 U	NA	1.0 U	1.0 U	1.0 U	1.0 U	1.0 U	1.0 U	1.0 U	1.0 U	1.0 U	NA	1.0 U	1.0 U	1.0 U	1.0 U	1.0 U	1.0 U	1.0 U	1.0 U	1.0 U	1.0 U
	1,2-Dichloropropane	3	50,000	NA	1.0 U	1.0 U	NA	1.0 U	1.0 U	1.0 U	1.0 U	1.0 U	1.0 U	1.0 U	1.0 U	1.0 U	NA	1.0 U	1.0 U	1.0 U	1.0 U	1.0 U	1.0 U	1.0 U	1.0 U	1.0 U	1.0 U
	Chlorodibromomethane	20	50,000	NA	10 U	1.0 U	NA	10 U	1.0 U	1.0 U	1.0 U	1.0 U	1.0 U	1.0 U	1.0 U	1.0 U	NA	1.0 U	1.0 U	1.0 U	1.0 U	1.0 U	1.0 U	1.0 U	1.0 U	1.0 U	1.0 U
	1,1,2-Trichloroethane	900	50,000	NA	1.0 U	1.0 U	NA	1.0 U	1.0 U	1.0 U	1.0 U	1.0 U	1.0 U	1.0 U	1.0 U	1.0 U	NA	1.0 U	1.0 U	1.0 U	1.0 U	1.0 U	1.0 U	1.0 U	1.0 U	1.0 U	1.0 U
	Tetrachloroethylene	50	30,000	NA	1.0 U	1.0 U	NA	**63**	**60**	**64**	**64**	**25**	**26**	**1.3**	1.0 U	1.0 U	NA	1.0 U	1.0 U	1.0 U	1.0 U	1.0 U	1.0 U	1.0 U	1.0 U	1.0 U	1.0 U
	Chlorobenzene	200	1,000	NA	1.0 U	1.0 U	NA	1.0 U	1.0 U	1.0 U	1.0 U	1.0 U	1.0 U	1.0 U	1.0 U	1.0 U	NA	1.0 U	1.0 U	1.0 U	1.0 U	1.0 U	1.0 U	1.0 U	1.0 U	1.0 U	1.0 U
	Trichlorofluoromethane (Freon 11)	NS	NS	NA	2.0 U	2.0 U	NA	2.0 U	2.0 U	2.0 U	2.0 U	2.0 U	2.0 U	2.0 U	2.0 U	2.0 U	NA	2.0 U	2.0 U	2.0 U	2.0 U	2.0 U	2.0 U	2.0 U	2.0 U	2.0 U	2.0 U
	1,2-Dichloroethane	5	20,000	NA	1.0 U	1.0 U	NA	1.0 U	1.0 U	1.0 U	1.0 U	1.0 U	1.0 U	1.0 U	1.0 U	1.0 U	NA	1.0 U	1.0 U	1.0 U	1.0 U	1.0 U	1.0 U	1.0 U	1.0 U	1.0 U	1.0 U
	1,1,1-Trichloroethane	4,000	20,000	NA	1.0 U	1.0 U	NA	1.0 U	1.0 U	1.0 U	1.0 U	1.0 U	1.0 U	**3.9**	**2.7**	1.0 U	NA	1.0 U	1.0 U	1.0 U	1.0 U	1.0 U	1.0 U	1.0 U	1.0 U	1.0 U	1.0 U
	Bromodichloromethane	6	50,000	NA	5.0 U	1.0 U	NA	5.0 U	1.0 U	1.0 U	1.0 U	1.0 U	1.0 U	1.0 U	1.0 U	1.0 U	NA	1.0 U	1.0 U	1.0 U	1.0 U	1.0 U	1.0 U	1.0 U	1.0 U	1.0 U	1.0 U
	trans-1,3-Dichloropropene	10[2]	200[2]	NA	5.0 U	0.50 U	NA	5.0 U	0.50 U	0.50 U	0.50 U	0.50 U	0.50 U	0.50 U	0.50 U	0.50 U	NA	0.50 U	0.50 U	0.50 U	0.50 U	0.50 U	0.50 U	0.50 U	0.50 U	0.50 U	0.50 U
	cis-1,3-Dichloropropene	10[2]	200[2]	NA	5.0 U	0.50 U	NA	5.0 U	0.50 U	0.50 U	0.50 U	0.50 U	0.50 U	0.50 U	0.50 U	0.50 U	NA	0.50 U	0.50 U	0.50 U	0.50 U	0.50 U	0.50 U	0.50 U	0.50 U	0.50 U	0.50 U
	1,1-Dichloropropene	NS	NS	NA	2.0 U	2.0 U	NA	2.0 U	2.0 U	2.0 U	2.0 U	2.0 U	2.0 U	2.0 U	2.0 U	2.0 U	NA	2.0 U	2.0 U	2.0 U	2.0 U	2.0 U	2.0 U	2.0 U	2.0 U	2.0 U	2.0 U
	Bromoform	700	50,000	NA	10 U	2.0 U	NA	10 U	2.0 U	2.0 U	2.0 U	2.0 U	2.0 U	2.0 U	2.0 U	2.0 U	NA	2.0 U	2.0 U	2.0 U	2.0 U	2.0 U	2.0 U	2.0 U	2.0 U	2.0 U	2.0 U
	1,1,2,2-Tetrachloroethane	9	50,000	NA	0.50 U	1.0 U	NA	0.50 U	1.0 U	1.0 U	1.0 U	1.0 U	1.0 U	1.0 U	1.0 U	1.0 U	NA	1.0 U	1.0 U	1.0 U	1.0 U	1.0 U	1.0 U	1.0 U	1.0 U	1.0 U	1.0 U
	Benzene	1,000	10,000	NA	1.0 U	1.0 U	NA	1.0 U	1.0 U	1.0 U	1.0 U	1.0 U	1.0 U	1.0 U	1.0 U	1.0 U	NA	1.0 U	1.0 U	1.0 U	1.0 U	1.0 U	1.0 U	1.0 U	1.0 U	1.0 U	1.0 U
	Toluene	50,000	40,000	NA	1.0 U	1.0 U	NA	1.0 U	1.0 U	1.0 U	1.0 U	1.0 U	1.0 U	1.0 U	1.0 U	1.0 U	NA	1.0 U	1.0 U	1.0 U	1.0 U	1.0 U	1.0 U	1.0 U	1.0 U	1.0 U	1.0 U
	Ethylbenzene	20,000	5,000	NA	1.0 U	1.0 U	NA	1.0 U	1.0 U	1.0 U	1.0 U	1.0 U	1.0 U	1.0 U	1.0 U	1.0 U	NA	1.0 U	1.0 U	1.0 U	1.0 U	1.0 U	1.0 U	1.0 U	1.0 U	1.0 U	1.0 U
	Chloromethane	NS	NS	NA	2.0 U	2.0 U	NA	2.0 U	2.0 U	2.0 U	2.0 U	2.0 U	2.0 U	2.0 U	2.0 U	2.0 U	NA	2.0 U	2.0 U	2.0 U	2.0 U	2.0 U	2.0 U	2.0 U	2.0 U	2.0 U	2.0 U
	Bromomethane	7	800	NA	2.0 U	5.0 U	NA	2.0 U	5.0 U	5.0 U	5.0 U	2.0 U	2.0 U	2.0 U	2.0 U	5.0 U	NA	5.0 U	5.0 U	2.0 U	5.0 U	5.0 U	5.0 U	5.0 U	5.0 U	2.0 U	5.0 U
	Vinyl Chloride	2	50,000	NA	2.0 U	1.0 U	NA	**3.4**	**9.2**	**9.9**	**1.6**	**1.4**	**3.7**	1.0 U	1.0 U	1.0 U	NA	1.0 U	1.0 U	1.0 U	1.0 U	1.0 U	1.0 U	1.0 U	1.0 U	1.0 U	1.0 U
	Chloroethane	NS	NS	NA	2.0 U	2.0 U	NA	2.0 U	2.0 U	2.0 U	2.0 U	2.0 U	2.0 U	2.0 U	2.0 U	2.0 U	NA	2.0 U	2.0 U	2.0 U	2.0 U	2.0 U	2.0 U	2.0 U	2.0 U	2.0 U	2.0 U
	1,1-Dichloroethylene	80	30,000	NA	1.0 U	1.0 U	NA	1.0 U	1.0 U	1.0 U	1.0 U	1.0 U	1.0 U	1.0 U	1.0 U	1.0 U	NA	1.0 U	1.0 U	1.0 U	1.0 U	1.0 U	1.0 U	1.0 U	1.0 U	1.0 U	1.0 U
	trans-1,2-Dichloroethylene	80	50,000	NA	1.0 U	1.0 U	NA	1.0 U	1.0 U	1.0 U	1.0 U	1.0 U	1.0 U	1.0 U	1.0 U	1.0 U	NA	1.0 U	1.0 U	1.0 U	1.0 U	1.0 U	1.0 U	1.0 U	1.0 U	1.0 U	1.0 U
	Trichloroethylene	5	5,000	NA	1.0 U	1.0 U	NA	**6.8**	**5.8**	**6.5**	**4.5**	**14**	1.0 U	**13**	**10**	1.0 U	NA	1.0 U	1.0 U	1.0 U	1.0 U	1.0 U	1.0 U	1.0 U	1.0 U	1.0 U	1.0 U
	1,2-Dichlorobenzene	8,000	2,000	NA	1.0 U	1.0 U	NA	1.0 U	1.0 U	1.0 U	1.0 U	1.0 U	1.0 U	1.0 U	1.0 U	1.0 U	NA	1.0 U	1.0 U	1.0 U	1.0 U	1.0 U	1.0 U	1.0 U	1.0 U	1.0 U	1.0 U
	1,3-Dichlorobenzene	6,000	50,000	NA	1.0 U	1.0 U	NA	1.0 U	1.0 U	1.0 U	1.0 U	1.0 U	1.0 U	1.0 U	1.0 U	1.0 U	NA	1.0 U	1.0 U	1.0 U	1.0 U	1.0 U	1.0 U	1.0 U	1.0 U	1.0 U	1.0 U
	1,4-Dichlorobenzene	60	8,000	NA	1.0 U	1.0 U	NA	1.0 U	1.0 U	1.0 U	1.0 U	1.0 U	1.0 U	1.0 U	1.0 U	1.0 U	NA	1.0 U	1.0 U	1.0 U	1.0 U	1.0 U	1.0 U	1.0 U	1.0 U	1.0 U	1.0 U
	Methyl tert-Butyl Ether (MTBE)	50,000	50,000	NA	1.0 U	2.0 U	NA	1.0 U	2.0 U	2.0 U	2.0 U	2.0 U	2.0 U	2.0 U	2.0 U	2.0 U	NA	2.0 U	2.0 U	2.0 U	2.0 U	2.0 U	2.0 U	2.0 U	2.0 U	2.0 U	2.0 U
	m+p Xylene	2	50,000	NA	2.0 U	2.0 U	NA	2.0 U	2.0 U	2.0 U	2.0 U	2.0 U	2.0 U	2.0 U	2.0 U	2.0 U	NA	2.0 U	2.0 U	2.0 U	2.0 U	2.0 U	2.0 U	2.0 U	2.0 U	2.0 U	2.0 U
	o-Xylene	2	50,000	NA	1.0 U	1.0 U	NA	1.0 U	1.0 U	1.0 U	1.0 U	1.0 U	1.0 U	1.0 U	1.0 U	1.0 U	NA	1.0 U	1.0 U	1.0 U	1.0 U	1.0 U	1.0 U	1.0 U	1.0 U	1.0 U	1.0 U
	cis-1,2-Dichloroethylene	20	50,000	NA	1.0 U	1.0 U	NA	**20**	**30**	**30**	**9.6**	**47**	**49**	**2.2**	**1.8**	1.0 U	NA	1.0 U	1.0 U	1.0 U	1.0 U	1.0 U	1.0 U	1.0 U	1.0 U	1.0 U	1.0 U
	Dibromomethane	NS	NS	NA	1.0 U	2.0 U	NA	1.0 U	2.0 U	2.0 U	2.0 U	2.0 U	2.0 U	2.0 U	2.0 U	2.0 U	NA	2.0 U	2.0 U	2.0 U	2.0 U	2.0 U	2.0 U	2.0 U	2.0 U	2.0 U	2.0 U
	1,2,3-Trichloropropane	NS	NS	NA	2.0 U	2.0 U	NA	2.0 U	2.0 U	2.0 U	2.0 U	2.0 U	2.0 U	2.0 U	2.0 U	2.0 U	NA	2.0 U	2.0 U	2.0 U	2.0 U	2.0 U	2.0 U	2.0 U	2.0 U	2.0 U	2.0 U
	Styrene	100	6,000	NA	1.0 U	1.0 U	NA	1.0 U	1.0 U	1.0 U	1.0 U	1.0 U	1.0 U	1.0 U	1.0 U	1.0 U	NA	1.0 U	1.0 U	1.0 U	1.0 U	1.0 U	1.0 U	1.0 U	1.0 U	1.0 U	1.0 U
	Dichlorodifluoromethane (Freon 12)	NS	NS	NA	2.0 U	2.0 U	NA	2.0 U	2.0 U	2.0 U	2.0 U	2.0 U	2.0 U	2.0 U	2.0 U	2.0 U	NA	2.0 U	2.0 U	2.0 U	2.0 U	2.0 U	2.0 U	2.0 U	2.0 U	2.0 U	2.0 U
	Acetone	50,000	50,000	NA	50 U	5.0 U	NA	50 U	5.0 U	5.0 U	5.0 U	5.0 U	5.0 U	5.0 U	5.0 U	5.0 U	NA	5.0 U	5.0 U	5.0 U	5.0 U	5.0 U	5.0 U	5.0 U	5.0 U	5.0 U	5.0 U
	Carbon Disulfide	NS	NS	NA	5.0 U	2.0 U	NA	5.0 U	2.0 U	2.0 U	2.0 U	2.0 U	2.0 U	2.0 U	2.0 U	2.0 U	NA	2.0 U	2.0 U	2.0 U	2.0 U	2.0 U	2.0 U	2.0 U	2.0 U	2.0 U	2.0 U
	2-Butanone (MEK)	50,000	50,000	NA	20 U	5.0 U	NA	20 U	5.0 U	5.0 U	5.0 U	5.0 U	5.0 U	5.0 U	5.0 U	5.0 U	NA	5.0 U	5.0 U	5.0 U	5.0 U	5.0 U	5.0 U	5.0 U	5.0 U	5.0 U	5.0 U
	4-Methyl-2-pentanone (MIBK)	50,000	50,000	NA	10 U	5.0 U	NA	10 U	5.0 U	5.0 U	5.0 U	5.0 U	5.0 U	5.0 U	5.0 U	5.0 U	NA	5.0 U	5.0 U	5.0 U	5.0 U	5.0 U	5.0 U	5.0 U	5.0 U	5.0 U	5.0 U
	2-Hexanone (MBK)	NS	NS	NA	10 U	5.0 U	NA	10 U	5.0 U	5.0 U	5.0 U	5.0 U	5.0 U	5.0 U	5.0 U	5.0 U	NA	5.0 U	5.0 U	5.0 U	5.0 U	5.0 U	5.0 U	5.0 U	5.0 U	5.0 U	5.0 U
	Bromochloromethane	NS	NS	NA	1.0 U	2.0 U	NA	1.0 U	2.0 U	2.0 U	2.0 U	2.0 U	2.0 U	2.0 U	2.0 U	2.0 U	NA	2.0 U	2.0 U	2.0 U	2.0 U	2.0 U	2.0 U	2.0 U	2.0 U	2.0 U	2.0 U
	Tetrahydrofuran	NS	NS	NA	10 U	10 U	NA	10 U	10 U	10 U	10 U	10 U	10 U	10 U	10 U	10 U	NA	10 U	10 U	10 U	10 U	10 U	10 U	10 U	10 U	5.0 U	10 U
	2,2-Dichloropropane	NS	NS	NA	1.0 U	2.0 U	NA	1.0 U	2.0 U	2.0 U	2.0 U	2.0 U	2.0 U	2.0 U	2.0 U	2.0 U	NA	2.0 U	2.0 U	2.0 U	2.0 U	2.0 U	2.0 U	2.0 U	2.0 U	2.0 U	2.0 U
	1,2-Dibromoethane (EDB)	2	50,000	NA	0.50 U	2.0 U	NA	0.50 U	2.0 U	2.0 U	2.0 U	2.0 U	2.0 U	2.0 U	2.0 U	2.0 U	NA	2.0 U	2.0 U	2.0 U	2.0 U	2.0 U	2.0 U	2.0 U	2.0 U	2.0 U	2.0 U
	1,3-Dichloropropane	NS	NS	NA	0.50 U	2.0 U	NA	0.50 U	2.0 U	2.0 U	2.0 U	2.0 U	2.0 U	2.0 U	2.0 U	2.0 U	NA	2.0 U	2.0 U	2.0 U	2.0 U	2.0 U	2.0 U	2.0 U	2.0 U	2.0 U	2.0 U
	1,1,1,2-Tetrachloroethane	10	50,000	NA	5.0 U	1.0 U	NA	5.0 U	1.0 U	1.0 U	1.0 U	1.0 U	1.0 U	1.0 U	1.0 U	1.0 U	NA	1.0 U	1.0 U	1.0 U	1.0 U	1.0 U	1.0 U	1.0 U	1.0 U	1.0 U	1.0 U
	Bromobenzene	NS	NS	NA	1.0 U	2.0 U	NA	1.0 U	2.0 U	2.0 U	2.0 U	2.0 U	2.0 U	2.0 U	2.0 U	2.0 U	NA	2.0 U	2.0 U	2.0 U	2.0 U	2.0 U	2.0 U	2.0 U	2.0 U	2.0 U	2.0 U
	n-Butylbenzene	4,000[1]	50,000[1]	NA	1.0 U	2.0 U	NA	1.0 U	2.0 U	2.0 U	2.0 U	2.0 U	2.0 U	2.0 U	2.0 U	2.0 U	NA	2.0 U	2.0 U	2.0 U	2.0 U	2.0 U	2.0 U	2.0 U	2.0 U	2.0 U	2.0 U
	sec-Butylbenzene	4,000[1]	50,000[1]	NA	1.0 U	2.0 U	NA	1.0 U	2.0 U	2.0 U	2.0 U	2.0 U	2.0 U	2.0 U	2.0 U	2.0 U	NA	2.0 U	2.0 U	2.0 U	2.0 U	2.0 U	2.0 U	2.0 U	2.0 U	2.0 U	2.0 U
	tert-Butylbenzene	4,000[1]	50,000[1]	NA	1.0 U	2.0 U	NA	1.0 U	2.0 U	2.0 U	2.0 U	2.0 U	2.0 U	2.0 U	2.0 U	2.0 U	NA	2.0 U	2.0 U	2.0 U	2.0 U	2.0 U	2.0 U	2.0 U	2.0 U	2.0 U	2.0 U
	2-Chlorotoluene	NS	NS	NA	1.0 U	2.0 U	NA	1.0 U	2.0 U	2.0 U	2.0 U	2.0 U	2.0 U	2.0 U	2.0 U	2.0 U	NA	2.0 U	2.0 U	2.0 U	2.0 U	2.0 U	2.0 U	2.0 U	2.0 U	2.0 U	2.0 U
	4-Chlorotoluene	NS	NS	NA	1.0 U	2.0 U	NA	1.0 U	2.0 U	2.0 U	2.0 U	2.0 U	2.0 U	2.0 U	2.0 U	2.0 U	NA	2.0 U	2.0 U	2.0 U	2.0 U	2.0 U	2.0 U	2.0 U	2.0 U	2.0 U	2.0 U
	1,2-Dibromo-3-chloropropane (DBCP)	NS	NS	NA	10 U	5.0 U	NA	10 U	5.0 U	5.0 U	5.0 U	2.0 U	2.0 U	2.0 U	2.0 U	5.0 U	NA	5.0 U	5.0 U	2.0 U	5.0 U	5.0 U	5.0 U	5.0 U	5.0 U	2.0 U	5.0 U
	Hexachlorobutadiene	50	3,000	NA	1.0 U	0.60 U	NA	1.0 U	0.60 U	0.60 U	0.60 U	0.60 U	0.60 U	0.60 U	0.60 U	0.60 U	NA	0.60 U	0.60 U	0.60 U	0.60 U	0.60 U	0.60 U	0.60 U	0.60 U	0.60 U	0.60 U
	Isopropylbenzene (Cumene)	4,000[1]	50,000[1]	NA	1.0 U	2.0 U	NA	1.0 U	2.0 U	2.0 U	2.0 U	2.0 U	2.0 U	2.0 U	2.0 U	2.0 U	NA	2.0 U	2.0 U	2.0 U	2.0 U	2.0 U	2.0 U	2.0 U	2.0 U	2.0 U	2.0 U
	p-Isopropyltoluene (p-Cymene)	4,000[1]	50,000[1]	NA	1.0 U	2.0 U	NA	1.0 U	2.0 U	2.0 U	2.0 U	2.0 U	2.0 U	2.0 U	2.0 U	2.0 U	NA	2.0 U	2.0 U	2.0 U	2.0 U	2.0 U	2.0 U	2.0 U	2.0 U	2.0 U	2.0 U
	Naphthalene	700	20,000	NA	2.0 U	5.0 U	NA	2.0 U	5.0 U	5.0 U	5.0 U	5.0 U	2.0 U	5.0 U	5.0 U	5.0 U	NA	5.0 U	5.0 U	2.0 U	5.0 U	5.0 U	5.0 U	5.0 U	5.0 U	2.0 U	5.0 U
	n-Propylbenzene	4,000[1]	50,000[1]	NA	1.0 U	2.0 U	NA	1.0 U	2.0 U	2.0 U	2.0 U	2.0 U	2.0 U	2.0 U	2.0 U	2.0 U	NA	2.0 U	2.0 U	2.0 U	2.0 U	2.0 U	2.0 U	2.0 U	2.0 U	2.0 U	2.0 U
	1,2,3-Trichlorobenzene	NS	NS	NA	5.0 U	2.0 U	NA	5.0 U	2.0 U	2.0 U	2.0 U	2.0 U	2.0 U	2.0 U	2.0 U	2.0 U	NA	2.0 U	2.0 U	2.0 U	2.0 U	2.0 U	2.0 U	2.0 U	2.0 U	2.0 U	2.0 U
	1,2,4-Trichlorobenzene	200	50,000	NA	1.0 U	2.0 U	NA	1.0 U	2.0 U	2.0 U	2.0 U	2.0 U	2.0 U	2.0 U	2.0 U	2.0 U	NA	2.0 U	2.0 U	2.0 U	2.0 U	2.0 U	2.0 U	2.0 U	2.0 U	2.0 U	2.0 U
	1,3,5-Trimethylbenzene	4,000[1]	50,000[1]	NA	1.0 U	2.0 U	NA	1.0 U	2.0 U	2.0 U	2.0 U	2.0 U	2.0 U	2.0 U	2.0 U	2.0 U	NA	2.0 U	2.0 U	2.0 U	2.0 U	2.0 U	2.0 U	2.0 U	2.0 U	2.0 U	2.0 U
	1,2,4-Trimethylbenzene	4,000[1]	50,000[1]	NA	1.0 U	2.0 U	NA	1.0 U	2.0 U	2.0 U	2.0 U	2.0 U	2.0 U	2.0 U	2.0 U	2.0 U	NA	2.0 U	2.0 U	2.0 U	2.0 U	2.0 U	2.0 U	2.0 U	2.0 U	2.0 U	2.0 U
	Diethyl Ether	NS	NS	NA	2.0 U	2.0 U	NA	2.0 U	2.0 U	2.0 U	2.0 U	2.0 U	2.0 U	2.0 U	2.0 U	2.0 U	NA	2.0 U	2.0 U	2.0 U	2.0 U	2.0 U	2.0 U	2.0 U	2.0 U	2.0 U	2.0 U
	Diisopropyl Ether (DIPE)	NS	NS	NA	0.50 U	2.0 U	NA	0.50 U	2.0 U	2.0 U	2.0 U	2.0 U	2.0 U	2.0 U	2.0 U	2.0 U	NA	2.0 U	2.0 U	2.0 U	2.0 U	2.0 U	2.0 U	2.0 U	2.0 U	2.0 U	2.0 U
	tert-Butyl Ethyl Ether (TBEE)	NS	NS	NA	0.50 U	2.0 U	NA	0.50 U	2.0 U	2.0 U	2.0 U	2.0 U	2.0 U	2.0 U	2.0 U	2.0 U	NA	2.0 U	2.0 U	2.0 U	2.0 U	2.0 U	2.0 U	2.0 U	2.0 U	2.0 U	2.0 U
	tert-Amyl Methyl Ether (TAME)	NS	NS	NA	0.50 U	2.0 U	NA	0.50 U	2.0 U	2.0 U	2.0 U	2.0 U	2.0 U	2.0 U	2.0 U	2.0 U	NA	2.0 U	2.0 U	2.0 U	2.0 U	2.0 U	2.0 U	2.0 U	2.0 U	2.0 U	2.0 U
	1,4-Dioxane	6,000	50,000	NA	50 U	250 U	NA	50 U	250 U	250 U	250 U	250 U	250 U	250 U	250 U	250 U	NA	250 U	250 U	250 U	250 U	250 U	250 U	250 U	250 U	250 U	250 U

Table 2
Summary of Analytical Results for Groundwater Samples -- 2008 through 2014
New Bedford High School
New Bedford, Massachusetts

Analysis	Analyte	Sample ID:		MW-6			MW-7							MW-7D		MW-8A	MW-8B	MW-11			MW-12	MW-13	MW-14	MW-15	MW-16		MW-17
		Filter Size (micron)^:		N/A	N/A	N/A	N/A	N/A	N/A	N/A	N/A	N/A	N/A	N/A	N/A	N/A	N/A	N/A	N/A	N/A	N/A	N/A	N/A	N/A	N/A	N/A	N/A
		Sample Date:		8/19/2008	1/7/2010	2/18/2010	9/16/2008	1/7/2010	2/17/2010	2/17/2010	4/7/2010	9/9/2010	10/22/2010	9/9/2010	9/9/2010	2/18/2010	9/16/2008	2/19/2010	4/7/2010	9/13/2010	2/18/2010	2/19/2010	2/19/2010	2/18/2010	2/19/2010	4/28/2011	2/18/2010
		GW-2	GW-3							Field Dup					Field Dup												
PAHs																											
(ug/L)	Acenaphthene	NS	10,000	0.30 U	NA	NA	5.0 U	NA	NA	NA	NA	NA	NA	NA	NA	NA	5.0 U	NA	NA	NA	NA	NA	NA	NA	NA	NA	NA
	Acenaphthylene	10,000	40	0.30 U	NA	NA	5.0 U	NA	NA	NA	NA	NA	NA	NA	NA	NA	5.0 U	NA	NA	NA	NA	NA	NA	NA	NA	NA	NA
	Anthracene	NS	30	0.20 U	NA	NA	5.0 U	NA	NA	NA	NA	NA	NA	NA	NA	NA	5.0 U	NA	NA	NA	NA	NA	NA	NA	NA	NA	NA
	Benzo(a)anthracene	NS	1,000	0.05 U	NA	NA	5.0 U	NA	NA	NA	NA	NA	NA	NA	NA	NA	5.0 U	NA	NA	NA	NA	NA	NA	NA	NA	NA	NA
	Benzo(a)pyrene	NS	500	0.10 U	NA	NA	5.0 U	NA	NA	NA	NA	NA	NA	NA	NA	NA	5.0 U	NA	NA	NA	NA	NA	NA	NA	NA	NA	NA
	Benzo(b)fluoranthene	NS	400	0.05 U	NA	NA	5.0 U	NA	NA	NA	NA	NA	NA	NA	NA	NA	5.0 U	NA	NA	NA	NA	NA	NA	NA	NA	NA	NA
	Benzo(g,h,i)perylene	NS	20	0.50 U	NA	NA	5.0 U	NA	NA	NA	NA	NA	NA	NA	NA	NA	5.0 U	NA	NA	NA	NA	NA	NA	NA	NA	NA	NA
	Benzo(k)fluoranthene	NS	100	0.20 U	NA	NA	5.0 U	NA	NA	NA	NA	NA	NA	NA	NA	NA	5.0 U	NA	NA	NA	NA	NA	NA	NA	NA	NA	NA
	Chrysene	NS	70	0.20 U	NA	NA	5.0 U	NA	NA	NA	NA	NA	NA	NA	NA	NA	5.0 U	NA	NA	NA	NA	NA	NA	NA	NA	NA	NA
	Dibenz(a,h)anthracene	NS	40	0.50 U	NA	NA	5.0 U	NA	NA	NA	NA	NA	NA	NA	NA	NA	5.0 U	NA	NA	NA	NA	NA	NA	NA	NA	NA	NA
	Fluoranthene	NS	200	0.50 U	NA	NA	5.0 U	NA	NA	NA	NA	NA	NA	NA	NA	NA	5.0 U	NA	NA	NA	NA	NA	NA	NA	NA	NA	NA
	Fluorene	NS	40	1.0 U	NA	NA	5.0 U	NA	NA	NA	NA	NA	NA	NA	NA	NA	5.0 U	NA	NA	NA	NA	NA	NA	NA	NA	NA	NA
	Indeno(1,2,3-cd)pyrene	NS	100	0.50 U	NA	NA	5.0 U	NA	NA	NA	NA	NA	NA	NA	NA	NA	5.0 U	NA	NA	NA	NA	NA	NA	NA	NA	NA	NA
	2-Methylnaphthalene	2,000	20,000	1.0 U	NA	NA	5.0 U	NA	NA	NA	NA	NA	NA	NA	NA	NA	5.0 U	NA	NA	NA	NA	NA	NA	NA	NA	NA	NA
	Naphthalene	700	20,000	1.0 U	NA	NA	5.0 U	NA	NA	NA	NA	NA	NA	NA	NA	NA	5.0 U	NA	NA	NA	NA	NA	NA	NA	NA	NA	NA
	Phenanthrene	NS	10,000	**0.09**	NA	NA	5.0 U	NA	NA	NA	NA	NA	NA	NA	NA	NA	5.0 U	NA	NA	NA	NA	NA	NA	NA	NA	NA	NA
	Pyrene	NS	20	1.0 U	NA	NA	5.0 U	NA	NA	NA	NA	NA	NA	NA	NA	NA	5.0 U	NA	NA	NA	NA	NA	NA	NA	NA	NA	NA
PCBs																											
(ug/L)	Aroclor 1016	5	10	0.0500 U	NA	NA	0.0500 U	NA	NA	NA	NA	NA	NA	NA	NA	NA	0.0500 U	NA	NA	NA	NA	NA	NA	NA	NA	NA	NA
	Aroclor 1221	5	10	0.0500 U	NA	NA	0.0500 U	NA	NA	NA	NA	NA	NA	NA	NA	NA	0.0500 U	NA	NA	NA	NA	NA	NA	NA	NA	NA	NA
	Aroclor 1232	5	10	0.0500 U	NA	NA	0.0500 U	NA	NA	NA	NA	NA	NA	NA	NA	NA	0.0500 U	NA	NA	NA	NA	NA	NA	NA	NA	NA	NA
	Aroclor 1242	5	10	0.0500 U	NA	NA	0.0500 U	NA	NA	NA	NA	NA	NA	NA	NA	NA	0.0500 U	NA	NA	NA	NA	NA	NA	NA	NA	NA	NA
	Aroclor 1248	5	10	0.0500 U	NA	NA	0.0500 U	NA	NA	NA	NA	NA	NA	NA	NA	NA	0.0500 U	NA	NA	NA	NA	NA	NA	NA	NA	NA	NA
	Aroclor 1254	5	10	0.0500 U	NA	NA	0.0500 U	NA	NA	NA	NA	NA	NA	NA	NA	NA	0.0500 U	NA	NA	NA	NA	NA	NA	NA	NA	NA	NA
	Aroclor 1260	5	10	0.0500 U	NA	NA	0.0500 U	NA	NA	NA	NA	NA	NA	NA	NA	NA	0.0500 U	NA	NA	NA	NA	NA	NA	NA	NA	NA	NA
	Aroclor 1262	5	10	NA	NA	NA	NA	NA	NA	NA	NA	NA	NA	NA	NA	NA	NA	NA	NA	NA	NA	NA	NA	NA	NA	NA	NA
	Aroclor 1268	5	10	NA	NA	NA	NA	NA	NA	NA	NA	NA	NA	NA	NA	NA	NA	NA	NA	NA	NA	NA	NA	NA	NA	NA	NA
	Total PCBs	5	10	0.0500 U	NA	NA	0.0500 U	NA	NA	NA	NA	NA	NA	NA	NA	NA	0.0500 U	NA	NA	NA	NA	NA	NA	NA	NA	NA	NA
Total Petroleum Hydrocarbons																											
(ug/L)	Total Petroleum Hydrocarbons (C9-C44	5,000	5,000	NA	NA	NA	NA	NA	NA	NA	NA	NA	NA	NA	NA	NA	NA	NA	NA	NA	NA	NA	NA	NA	NA	NA	NA
Metals, total																											
(ug/L)	Antimony	NS	8,000	3.0 U	NA	NA	5.0 U	NA	NA	NA	NA	NA	NA	NA	NA	NA	5.0 U	NA	NA	NA	NA	NA	NA	NA	NA	NA	NA
	Arsenic	NS	900	**13.0**	NA	NA	2.0 U	NA	NA	NA	NA	NA	NA	NA	NA	NA	2.0 U	NA	NA	NA	NA	NA	NA	NA	NA	NA	NA
	Barium	NS	50,000	50 U	NA	NA	**254**	NA	NA	NA	NA	NA	NA	NA	NA	NA	250 U	NA	NA	NA	NA	NA	NA	NA	NA	NA	NA
	Beryllium	NS	200	2.0 U	NA	NA	2.0 U	NA	NA	NA	NA	NA	NA	NA	NA	NA	2.0 U	NA	NA	NA	NA	NA	NA	NA	NA	NA	NA
	Cadmium	NS	4	2.5 U	NA	NA	2.5 U	NA	NA	NA	NA	NA	NA	NA	NA	NA	2.5 U	NA	NA	NA	NA	NA	NA	NA	NA	NA	NA
	Chromium	NS	300	5.0 U	NA	NA	50 U	NA	NA	NA	NA	NA	NA	NA	NA	NA	50 U	NA	NA	NA	NA	NA	NA	NA	NA	NA	NA
	Lead	NS	10	7.5 U	NA	NA	5.0 U	NA	NA	NA	NA	NA	NA	NA	NA	NA	5.0 U	NA	NA	NA	NA	NA	NA	NA	NA	NA	NA
	Mercury	NS	20	0.10 U	NA	NA	0.10 U	NA	NA	NA	NA	NA	NA	NA	NA	NA	0.10 U	NA	NA	NA	NA	NA	NA	NA	NA	NA	NA
	Nickel	NS	200	5.0 U	NA	NA	**29.4**	NA	NA	NA	NA	NA	NA	NA	NA	NA	25 U	NA	NA	NA	NA	NA	NA	NA	NA	NA	NA
	Selenium	NS	100	30 U	NA	NA	25 U	NA	NA	NA	NA	NA	NA	NA	NA	NA	25 U	NA	NA	NA	NA	NA	NA	NA	NA	NA	NA
	Silver	NS	7	**3.0**	NA	NA	2.5 U	NA	NA	NA	NA	NA	NA	NA	NA	NA	2.5 U	NA	NA	NA	NA	NA	NA	NA	NA	NA	NA
	Thallium	NS	3,000	1.0 U	NA	NA	1.0 U	NA	NA	NA	NA	NA	NA	NA	NA	NA	**1.29**	NA	NA	NA	NA	NA	NA	NA	NA	NA	NA
	Vanadium	NS	4,000	25 U	NA	NA	25 U	NA	NA	NA	NA	NA	NA	NA	NA	NA	25 U	NA	NA	NA	NA	NA	NA	NA	NA	NA	NA
	Zinc	NS	900	**110**	NA	NA	**894**	NA	NA	NA	NA	NA	NA	NA	NA	NA	100 U	NA	NA	NA	NA	NA	NA	NA	NA	NA	NA
Metals, dissolved																											
(ug/L)	Antimony	NS	8,000	3.0 U	NA	NA	5.0 U	NA	NA	NA	NA	NA	NA	NA	NA	NA	5.0 U	NA	NA	NA	NA	NA	NA	NA	NA	NA	NA
	Arsenic	NS	900	**10**	NA	NA	**2.41**	NA	NA	NA	NA	NA	NA	NA	NA	NA	2.0 U	NA	NA	NA	NA	NA	NA	NA	NA	NA	NA
	Barium	NS	50,000	50 U	NA	NA	250 U	NA	NA	NA	NA	NA	NA	NA	NA	NA	250 U	NA	NA	NA	NA	NA	NA	NA	NA	NA	NA
	Beryllium	NS	200	2.0 U	NA	NA	2.0 U	NA	NA	NA	NA	NA	NA	NA	NA	NA	2.0 U	NA	NA	NA	NA	NA	NA	NA	NA	NA	NA
	Cadmium	NS	4	2.5 U	NA	NA	2.5 U	NA	NA	NA	NA	NA	NA	NA	NA	NA	2.5 U	NA	NA	NA	NA	NA	NA	NA	NA	NA	NA
	Chromium	NS	300	5.0 U	NA	NA	50 U	NA	NA	NA	NA	NA	NA	NA	NA	NA	50 U	NA	NA	NA	NA	NA	NA	NA	NA	NA	NA
	Lead	NS	10	8.0 U	NA	NA	5.0 U	NA	NA	NA	NA	NA	NA	NA	NA	NA	5.0 U	NA	NA	NA	NA	NA	NA	NA	NA	NA	NA
	Mercury	NS	20	0.10 U	NA	NA	0.10 U	NA	NA	NA	NA	NA	NA	NA	NA	NA	0.10 U	NA	NA	NA	NA	NA	NA	NA	NA	NA	NA
	Nickel	NS	200	5.0 U	NA	NA	**27.7**	NA	NA	NA	NA	NA	NA	NA	NA	NA	25 U	NA	NA	NA	NA	NA	NA	NA	NA	NA	NA
	Selenium	NS	100	30 U	NA	NA	25 U	NA	NA	NA	NA	NA	NA	NA	NA	NA	25 U	NA	NA	NA	NA	NA	NA	NA	NA	NA	NA
	Silver	NS	7	**2.6**	NA	NA	2.5 U	NA	NA	NA	NA	NA	NA	NA	NA	NA	2.5 U	NA	NA	NA	NA	NA	NA	NA	NA	NA	NA
	Thallium	NS	3,000	1.0 U	NA	NA	1.0 U	NA	NA	NA	NA	NA	NA	NA	NA	NA	1.0 U	NA	NA	NA	NA	NA	NA	NA	NA	NA	NA
	Vanadium	NS	4,000	50 U	NA	NA	25 U	NA	NA	NA	NA	NA	NA	NA	NA	NA	25 U	NA	NA	NA	NA	NA	NA	NA	NA	NA	NA
	Zinc	NS	900	10 U	NA	NA	**870**	NA	NA	NA	NA	NA	NA	NA	NA	NA	100 U	NA	NA	NA	NA	NA	NA	NA	NA	NA	NA
General Chemistry																											
(ug/L)	Nitrogen, Nitrate	NS	NS	NA	NA	NA	NA	NA	NA	NA	NA	100 U	NA	100 U	100 U	NA	NA	NA	NA	NA	NA	NA	NA	NA	NA	NA	NA
	Sulfate	NS	NS	NA	NA	NA	NA	NA	NA	NA	NA	**25,000**	NA	**20,000**	**20,000**	NA	NA	NA	NA	NA	NA	NA	NA	NA	NA	NA	NA
	Total Organic Carbon	NS	NS	NA	NA	NA	NA	NA	NA	NA	NA	**7,400**	NA	**6,100**	**6,100**	NA	NA	NA	NA	NA	NA	NA	NA	NA	NA	NA	NA

Notes:
ug/L - micrograms per liter.
B - Compound detected in associated method blank
J - Estimated value.
NA - Sample not analyzed for the listed analyte.
N/A - Not applicable.
NS - No MassDEP standards exist for this compound.
U - Compound was not detected at specified quantitation limit.
Values in **Bold** indicate the compound was detected.
VOCs - Volatile Organic Compounds.
PAHs - Polynuclear Aromatic Hydrocarbons.
PCBs - Polychlorinated Biphenyls.
(1) - MassDEP Method 1 standards for C9-C10 aromatic hydrocarbons used.
(2) - MassDEP Method 1 standards for 1,3-Dichloropropene used.
^ - 0.45 micron filtration done in field; 0.20 and 2.0 micron filtration performed in lab.
* - Sample collected on 4/10/2012 for PCB analysis was broken and was recollected on 4/18/2012
** - Lab filtered sample using a 2.0 micron filter and then filtered a second time using a 0.20 micr

Table 2
Summary of Analytical Results for Groundwater Samples -- 2008 through 2014
New Bedford High School
New Bedford, Massachusetts

Analysis	Analyte		Sample ID:	MW-18					MW-19	MW-20		MW-21		MW-22			MW-23		MW-24				MW-25	MW-26	MW-27	
		Filter Size (micron)^3		N/A	N/A	N/A	N/A	N/A	N/A	N/A	N/A	N/A	N/A	N/A	N/A	N/A	N/A	N/A	N/A	N/A	N/A	N/A	N/A	N/A	N/A	N/A
		Sample Date:		2/18/2010	4/9/2010	9/13/2010	4/28/2011	4/10/2012	2/18/2010	4/8/2010	9/10/2010	4/8/2010	9/13/2010	4/8/2010	4/8/2010 Field Dup	9/13/2010	4/8/2010	9/13/2010	4/8/2010	9/10/2010	10/21/2010	10/21/2010 Field Dup	9/8/2010	9/8/2010	9/9/2010	10/21/2010
		GW-2	GW-3																							
VOCs																										
(ug/L)	Methylene Chloride	2,000	50,000	5.0 U	5.0 U	2.0 U	2.0 U	2.0 U	5.0 U	5.0 U	2.0 U	5.0 U	2.0 U	5.0 U	5.0 U	2.0 U	5.0 U	2.0 U	5.0 U	2.0 U	2.0 U	2.0 U	2.0 U	2.0 U	800 U	200 U
	1,1-Dichloroethane	2,000	20,000	1.0 U	1.0 U	1.0 U	1.0 U	1.0 U	1.0 U	1.0 U	1.0 U	1.0 U	1.0 U	1.0 U	1.0 U	1.0 U	1.0 U	1.0 U	1.0 U	1.0 U	1.0 U	1.0 U	1.0 U	1.0 U	400 U	100 U
	Chloroform	50	20,000	1.0 U	1.0 U	1.0 U	1.0 U	1.0 U	1.0 U	1.0 U	1.0 U	1.0 U	1.0 U	1.0 U	1.0 U	1.0 U	1.0 U	1.0 U	1.0 U	1.0 U	1.0 U	1.0 U	1.0 U	1.0 U	400 U	100 U
	Carbon Tetrachloride	2	5,000	1.0 U	1.0 U	1.0 U	1.0 U	1.0 U	1.0 U	1.0 U	1.0 U	1.0 U	1.0 U	1.0 U	1.0 U	1.0 U	1.0 U	1.0 U	1.0 U	1.0 U	1.0 U	1.0 U	1.0 U	1.0 U	400 U	100 U
	1,2-Dichloropropane	3	50,000	1.0 U	1.0 U	1.0 U	1.0 U	1.0 U	1.0 U	1.0 U	1.0 U	1.0 U	1.0 U	1.0 U	1.0 U	1.0 U	1.0 U	1.0 U	1.0 U	1.0 U	1.0 U	1.0 U	1.0 U	1.0 U	400 U	100 U
	Chlorodibromomethane	20	50,000	1.0 U	1.0 U	1.0 U	1.0 U	1.0 U	1.0 U	1.0 U	1.0 U	1.0 U	1.0 U	1.0 U	1.0 U	1.0 U	1.0 U	1.0 U	1.0 U	1.0 U	1.0 U	1.0 U	1.0 U	1.0 U	400 U	100 U
	1,1,2-Trichloroethane	900	50,000	1.0 U	1.0 U	1.0 U	1.0 U	1.0 U	1.0 U	1.0 U	1.0 U	1.0 U	1.0 U	1.0 U	1.0 U	1.0 U	1.0 U	1.0 U	1.0 U	1.0 U	1.0 U	1.0 U	1.0 U	1.0 U	400 U	100 U
	Tetrachloroethylene	50	30,000	1.0 U	1.0 U	1.0 U	1.0 U	1.0 U	1.0 U	1.0 U	1.0 U	1.0 U	1.0 U	1.0 U	1.0 U	1.0 U	1.0 U	1.0 U	1.0 U	1.0 U	1.0 U	1.0 U	1.0 U	1.0 U	400 U	100 U
	Chlorobenzene	200	1,000	1.0 U	1.0 U	1.0 U	1.0 U	1.0 U	1.0 U	1.0 U	1.0 U	1.0 U	1.0 U	1.0 U	1.0 U	1.0 U	1.0 U	1.0 U	1.0 U	1.0 U	1.0 U	1.0 U	1.0 U	1.0 U	400 U	100 U
	Trichlorofluoromethane (Freon 11)	NS	NS	2.0 U	2.0 U	2.0 U	2.0 U	2.0 U	2.0 U	2.0 U	2.0 U	2.0 U	2.0 U	2.0 U	2.0 U	2.0 U	2.0 U	2.0 U	2.0 U	2.0 U	2.0 U	2.0 U	2.0 U	2.0 U	800 U	200 U
	1,2-Dichloroethane	5	20,000	1.0 U	1.0 U	1.0 U	1.0 U	1.0 U	1.0 U	1.0 U	1.0 U	1.0 U	1.0 U	1.0 U	1.0 U	1.0 U	1.0 U	1.0 U	1.0 U	1.0 U	1.0 U	1.0 U	1.0 U	1.0 U	400 U	100 U
	1,1,1-Trichloroethane	4,000	20,000	1.0 U	1.0 U	1.0 U	1.0 U	1.0 U	1.0 U	1.0 U	1.0 U	1.0 U	1.0 U	1.0 U	1.0 U	1.0 U	1.0 U	1.0 U	1.0 U	1.0 U	1.0 U	1.0 U	1.0 U	1.0 U	400 U	100 U
	Bromodichloromethane	6	50,000	1.0 U	1.0 U	1.0 U	1.0 U	1.0 U	1.0 U	1.0 U	1.0 U	1.0 U	1.0 U	1.0 U	1.0 U	1.0 U	1.0 U	1.0 U	1.0 U	1.0 U	1.0 U	1.0 U	1.0 U	1.0 U	400 U	100 U
	trans-1,3-Dichloropropene	10[2]	200[2]	0.50 U	0.50 U	0.50 U	0.50 U	0.50 U	0.50 U	0.50 U	0.50 U	0.50 U	0.50 U	0.50 U	0.50 U	0.50 U	0.50 U	0.50 U	0.50 U	0.50 U	0.50 U	0.50 U	0.50 U	0.50 U	200 U	50 U
	cis-1,3-Dichloropropene	10[2]	200[2]	0.50 U	0.50 U	0.50 U	0.50 U	0.50 U	0.50 U	0.50 U	0.50 U	0.50 U	0.50 U	0.50 U	0.50 U	0.50 U	0.50 U	0.50 U	0.50 U	0.50 U	0.50 U	0.50 U	0.50 U	0.50 U	200 U	50 U
	1,1-Dichloropropene	NS	NS	2.0 U	2.0 U	2.0 U	2.0 U	2.0 U	2.0 U	2.0 U	2.0 U	2.0 U	2.0 U	2.0 U	2.0 U	2.0 U	2.0 U	2.0 U	2.0 U	2.0 U	2.0 U	2.0 U	2.0 U	2.0 U	800 U	200 U
	Bromoform	700	50,000	2.0 U	2.0 U	2.0 U	2.0 U	2.0 U	2.0 U	2.0 U	2.0 U	2.0 U	2.0 U	2.0 U	2.0 U	2.0 U	2.0 U	2.0 U	2.0 U	2.0 U	2.0 U	2.0 U	2.0 U	2.0 U	800 U	200 U
	1,1,2,2-Tetrachloroethane	9	50,000	1.0 U	1.0 U	1.0 U	1.0 U	1.0 U	1.0 U	1.0 U	1.0 U	1.0 U	1.0 U	1.0 U	1.0 U	1.0 U	1.0 U	1.0 U	1.0 U	1.0 U	1.0 U	1.0 U	1.0 U	1.0 U	400 U	100 U
	Benzene	1,000	10,000	1.0 U	1.0 U	1.0 U	1.0 U	0.50 U	1.0 U	1.0 U	1.0 U	1.0 U	1.0 U	1.0 U	1.0 U	1.0 U	1.0 U	1.0 U	1.0 U	1.0 U	1.0 U	1.0 U	1.0 U	1.0 U	400 U	100 U
	Toluene	50,000	40,000	1.0 U	1.0 U	1.0 U	1.0 U	1.0 U	1.0 U	1.0 U	1.0 U	1.0 U	1.0 U	1.0 U	1.0 U	1.0 U	1.0 U	1.0 U	1.0 U	1.0 U	1.0 U	1.0 U	1.0 U	1.0 U	400 U	100 U
	Ethylbenzene	20,000	5,000	1.0 U	1.0 U	1.0 U	1.0 U	1.0 U	1.0 U	1.0 U	1.0 U	1.0 U	1.0 U	1.0 U	1.0 U	1.0 U	1.0 U	1.0 U	1.0 U	1.0 U	1.0 U	1.0 U	1.0 U	1.0 U	400 U	100 U
	Chloromethane	NS	NS	2.0 U	2.0 U	2.0 U	2.0 U	2.0 U	2.0 U	2.0 U	2.0 U	2.0 U	2.0 U	2.0 U	2.0 U	2.0 U	2.0 U	2.0 U	2.0 U	2.0 U	2.0 U	2.0 U	2.0 U	2.0 U	800 U	200 U
	Bromomethane	7	800	5.0 U	5.0 U	2.0 U	2.0 U	2.0 U	5.0 U	5.0 U	2.0 U	5.0 U	2.0 U	5.0 U	5.0 U	2.0 U	5.0 U	2.0 U	5.0 U	2.0 U	2.0 U	2.0 U	2.0 U	2.0 U	800 U	200 U
	Vinyl Chloride	2	50,000	1.0 U	1.0 U	1.0 U	1.0 U	1.0 U	1.0 U	1.0 U	1.0 U	1.0 U	1.0 U	1.0 U	1.0 U	1.0 U	1.0 U	1.0 U	**4.8**	**1.5**	**1.2**	**1.2**	1.0 U	1.0 U	**550.0**	**10.3 J**
	Chloroethane	NS	NS	2.0 U	2.0 U	2.0 U	2.0 U	2.0 U	2.0 U	2.0 U	2.0 U	2.0 U	2.0 U	2.0 U	2.0 U	2.0 U	2.0 U	2.0 U	2.0 U	2.0 U	2.0 U	2.0 U	2.0 U	2.0 U	800 U	200 U
	1,1-Dichloroethylene	80	30,000	1.0 U	1.0 U	1.0 U	1.0 U	1.0 U	1.0 U	1.0 U	1.0 U	1.0 U	1.0 U	1.0 U	1.0 U	1.0 U	1.0 U	1.0 U	1.0 U	1.0 U	1.0 U	1.0 U	1.0 U	1.0 U	400 U	100 U
	trans-1,2-Dichloroethylene	80	50,000	1.0 U	1.0 U	1.0 U	1.0 U	1.0 U	1.0 U	1.0 U	1.0 U	1.0 U	1.0 U	1.0 U	1.0 U	1.0 U	1.0 U	1.0 U	1.0 U	1.0 U	1.0 U	1.0 U	1.0 U	1.0 U	**700**	**26.5 J**
	Trichloroethylene	5	5,000	1.0 U	1.0 U	1.0 U	1.0 U	1.0 U	1.0 U	**1.5**	1.0 U	1.0 U	1.0 U	1.0 U	1.0 U	1.0 U	1.0 U	1.0 U	1.0 U	1.0 U	1.0 U	1.0 U	1.0 U	1.0 U	**31,000**	**4,500**
	1,2-Dichlorobenzene	8,000	2,000	1.0 U	1.0 U	1.0 U	1.0 U	1.0 U	1.0 U	1.0 U	1.0 U	1.0 U	1.0 U	1.0 U	1.0 U	1.0 U	1.0 U	1.0 U	1.0 U	1.0 U	1.0 U	1.0 U	1.0 U	1.0 U	400 U	100 U
	1,3-Dichlorobenzene	6,000	50,000	1.0 U	1.0 U	1.0 U	1.0 U	1.0 U	1.0 U	1.0 U	1.0 U	1.0 U	1.0 U	1.0 U	1.0 U	1.0 U	1.0 U	1.0 U	1.0 U	1.0 U	1.0 U	1.0 U	1.0 U	1.0 U	400 U	100 U
	1,4-Dichlorobenzene	60	8,000	1.0 U	1.0 U	1.0 U	1.0 U	1.0 U	1.0 U	1.0 U	1.0 U	1.0 U	1.0 U	1.0 U	1.0 U	1.0 U	1.0 U	1.0 U	1.0 U	1.0 U	1.0 U	1.0 U	1.0 U	1.0 U	400 U	100 U
	Methyl tert-Butyl Ether (MTBE)	50,000	50,000	2.0 U	2.0 U	2.0 U	2.0 U	2.0 U	2.0 U	2.0 U	2.0 U	2.0 U	2.0 U	2.0 U	2.0 U	2.0 U	2.0 U	2.0 U	2.0 U	2.0 U	2.0 U	2.0 U	2.0 U	2.0 U	800 U	200 U
	m+p Xylene	2	50,000	2.0 U	2.0 U	2.0 U	2.0 U	2.0 U	2.0 U	2.0 U	2.0 U	2.0 U	2.0 U	2.0 U	2.0 U	2.0 U	2.0 U	2.0 U	2.0 U	2.0 U	2.0 U	2.0 U	2.0 U	2.0 U	800 U	200 U
	o-Xylene	2	50,000	1.0 U	1.0 U	1.0 U	1.0 U	1.0 U	1.0 U	1.0 U	1.0 U	1.0 U	1.0 U	1.0 U	1.0 U	1.0 U	1.0 U	1.0 U	1.0 U	1.0 U	1.0 U	1.0 U	1.0 U	1.0 U	400 U	100 U
	cis-1,2-Dichloroethylene	20	50,000	1.0 U	1.0 U	1.0 U	1.0 U	1.0 U	1.0 U	**1.5**	**1.8**	1.0 U	1.0 U	1.0 U	1.0 U	1.0 U	1.0 U	1.0 U	**1.8**	1.0 U	1.0 U	1.0 U	1.0 U	1.0 U	**4,100**	**290**
	Dibromomethane	NS	NS	2.0 U	2.0 U	2.0 U	2.0 U	2.0 U	2.0 U	2.0 U	2.0 U	2.0 U	2.0 U	2.0 U	2.0 U	2.0 U	2.0 U	2.0 U	2.0 U	2.0 U	2.0 U	2.0 U	2.0 U	2.0 U	800 U	200 U
	1,2,3-Trichloropropane	NS	NS	2.0 U	2.0 U	2.0 U	2.0 U	2.0 U	2.0 U	2.0 U	2.0 U	2.0 U	2.0 U	2.0 U	2.0 U	2.0 U	2.0 U	2.0 U	2.0 U	2.0 U	2.0 U	2.0 U	2.0 U	2.0 U	800 U	200 U
	Styrene	100	6,000	1.0 U	1.0 U	1.0 U	1.0 U	1.0 U	1.0 U	1.0 U	1.0 U	1.0 U	1.0 U	1.0 U	1.0 U	1.0 U	1.0 U	1.0 U	1.0 U	1.0 U	1.0 U	1.0 U	1.0 U	1.0 U	400 U	100 U
	Dichlorodifluoromethane (Freon 12)	NS	NS	2.0 U	2.0 U	2.0 U	2.0 U	2.0 U	2.0 U	2.0 U	2.0 U	2.0 U	2.0 U	2.0 U	2.0 U	2.0 U	2.0 U	2.0 U	2.0 U	2.0 U	2.0 U	2.0 U	2.0 U	2.0 U	800 U	200 U
	Acetone	50,000	50,000	5.0 U	5.0 U	5.0 U	5.0 U	5.0 U	5.0 U	5.0 U	5.0 U	5.0 U	5.0 U	5.0 U	5.0 U	5.0 U	5.0 U	5.0 U	5.0 U	5.0 U	5.0 U	5.0 U	5.0 U	5.0 U	2,000 U	500 U
	Carbon Disulfide	NS	NS	2.0 U	2.0 U	2.0 U	2.0 U	**2.3**	2.0 U	2.0 U	2.0 U	2.0 U	2.0 U	2.0 U	2.0 U	2.0 U	2.0 U	2.0 U	2.0 U	2.0 U	2.0 U	2.0 U	2.0 U	2.0 U	800 U	200 U
	2-Butanone (MEK)	50,000	50,000	5.0 U	5.0 U	5.0 U	5.0 U	5.0 U	5.0 U	5.0 U	5.0 U	5.0 U	5.0 U	5.0 U	5.0 U	5.0 U	5.0 U	5.0 U	5.0 U	5.0 U	5.0 U	5.0 U	5.0 U	5.0 U	2,000 U	500 U
	4-Methyl-2-pentanone (MIBK)	50,000	50,000	5.0 U	5.0 U	5.0 U	5.0 U	5.0 U	5.0 U	5.0 U	5.0 U	5.0 U	5.0 U	5.0 U	5.0 U	5.0 U	5.0 U	5.0 U	5.0 U	5.0 U	5.0 U	5.0 U	5.0 U	5.0 U	2,000 U	500 U
	2-Hexanone (MBK)	NS	NS	5.0 U	5.0 U	5.0 U	5.0 U	5.0 U	5.0 U	5.0 U	5.0 U	5.0 U	5.0 U	5.0 U	5.0 U	5.0 U	5.0 U	5.0 U	5.0 U	5.0 U	5.0 U	5.0 U	5.0 U	5.0 U	2,000 U	500 U
	Bromochloromethane	NS	NS	2.0 U	2.0 U	2.0 U	2.0 U	2.0 U	2.0 U	2.0 U	2.0 U	2.0 U	2.0 U	2.0 U	2.0 U	2.0 U	2.0 U	2.0 U	2.0 U	2.0 U	2.0 U	2.0 U	2.0 U	2.0 U	800 U	200 U
	Tetrahydrofuran	NS	NS	10 U	10 U	10 U	5.0 U	5.0 U	10 U	10 U	10 U	10 U	10 U	10 U	10 U	10 U	10 U	10 U	10 U	10 U	10 U	10 U	10 U	10 U	4,000 U	1,000 U
	2,2-Dichloropropane	NS	NS	2.0 U	2.0 U	2.0 U	2.0 U	2.0 U	2.0 U	2.0 U	2.0 U	2.0 U	2.0 U	2.0 U	2.0 U	2.0 U	2.0 U	2.0 U	2.0 U	2.0 U	2.0 U	2.0 U	2.0 U	2.0 U	800 U	200 U
	1,2-Dibromoethane (EDB)	2	50,000	2.0 U	2.0 U	2.0 U	2.0 U	2.0 U	2.0 U	2.0 U	2.0 U	2.0 U	2.0 U	2.0 U	2.0 U	2.0 U	2.0 U	2.0 U	2.0 U	2.0 U	2.0 U	2.0 U	2.0 U	2.0 U	800 U	200 U
	1,3-Dichloropropane	NS	NS	2.0 U	2.0 U	2.0 U	2.0 U	2.0 U	2.0 U	2.0 U	2.0 U	2.0 U	2.0 U	2.0 U	2.0 U	2.0 U	2.0 U	2.0 U	2.0 U	2.0 U	2.0 U	2.0 U	2.0 U	2.0 U	800 U	200 U
	1,1,1,2-Tetrachloroethane	10	50,000	1.0 U	1.0 U	1.0 U	1.0 U	1.0 U	1.0 U	1.0 U	1.0 U	1.0 U	1.0 U	1.0 U	1.0 U	1.0 U	1.0 U	1.0 U	1.0 U	1.0 U	1.0 U	1.0 U	1.0 U	1.0 U	400 U	100 U
	Bromobenzene	NS	NS	2.0 U	2.0 U	2.0 U	2.0 U	2.0 U	2.0 U	2.0 U	2.0 U	2.0 U	2.0 U	2.0 U	2.0 U	2.0 U	2.0 U	2.0 U	2.0 U	2.0 U	2.0 U	2.0 U	2.0 U	2.0 U	800 U	200 U
	n-Butylbenzene	4,000[1]	50,000[1]	2.0 U	2.0 U	2.0 U	2.0 U	2.0 U	2.0 U	2.0 U	2.0 U	2.0 U	2.0 U	2.0 U	2.0 U	2.0 U	2.0 U	2.0 U	2.0 U	2.0 U	2.0 U	2.0 U	2.0 U	2.0 U	800 U	200 U
	sec-Butylbenzene	4,000[1]	50,000[1]	2.0 U	2.0 U	2.0 U	2.0 U	2.0 U	2.0 U	2.0 U	2.0 U	2.0 U	2.0 U	2.0 U	2.0 U	2.0 U	2.0 U	2.0 U	2.0 U	2.0 U	2.0 U	2.0 U	2.0 U	2.0 U	800 U	200 U
	tert-Butylbenzene	4,000[1]	50,000[1]	2.0 U	2.0 U	2.0 U	2.0 U	2.0 U	2.0 U	2.0 U	2.0 U	2.0 U	2.0 U	2.0 U	2.0 U	2.0 U	2.0 U	2.0 U	2.0 U	2.0 U	2.0 U	2.0 U	2.0 U	2.0 U	800 U	200 U
	2-Chlorotoluene	NS	NS	2.0 U	2.0 U	2.0 U	2.0 U	2.0 U	2.0 U	2.0 U	2.0 U	2.0 U	2.0 U	2.0 U	2.0 U	2.0 U	2.0 U	2.0 U	2.0 U	2.0 U	2.0 U	2.0 U	2.0 U	2.0 U	800 U	200 U
	4-Chlorotoluene	NS	NS	2.0 U	2.0 U	2.0 U	2.0 U	2.0 U	2.0 U	2.0 U	2.0 U	2.0 U	2.0 U	2.0 U	2.0 U	2.0 U	2.0 U	2.0 U	2.0 U	2.0 U	2.0 U	2.0 U	2.0 U	2.0 U	800 U	200 U
	1,2-Dibromo-3-chloropropane (DBCP)	NS	NS	5.0 U	5.0 U	2.0 U	2.0 U	2.0 U	5.0 U	5.0 U	2.0 U	5.0 U	2.0 U	5.0 U	5.0 U	2.0 U	5.0 U	2.0 U	5.0 U	2.0 U	2.0 U	2.0 U	2.0 U	2.0 U	800 U	200 U
	Hexachlorobutadiene	50	3,000	0.60 U	0.60 U	0.60 U	0.60 U	0.60 U	0.60 U	0.60 U	0.60 U	0.60 U	0.60 U	0.60 U	0.60 U	0.60 U	0.60 U	0.60 U	0.60 U	0.60 U	0.60 U	0.60 U	0.60 U	0.60 U	240 U	60 U
	Isopropylbenzene (Cumene)	4,000[1]	50,000[1]	2.0 U	2.0 U	2.0 U	2.0 U	2.0 U	2.0 U	2.0 U	2.0 U	2.0 U	2.0 U	2.0 U	2.0 U	2.0 U	2.0 U	2.0 U	2.0 U	2.0 U	2.0 U	2.0 U	2.0 U	2.0 U	800 U	200 U
	p-Isopropyltoluene (p-Cymene)	4,000[1]	50,000[1]	2.0 U	2.0 U	2.0 U	2.0 U	2.0 U	2.0 U	2.0 U	2.0 U	2.0 U	2.0 U	2.0 U	**6.2**	**6.2**	2.0 U	2.0 U	2.0 U	2.0 U	2.0 U	2.0 U	2.0 U	2.0 U	800 U	200 U
	Naphthalene	700	20,000	5.0 U	5.0 U	2.0 U	2.0 U	2.0 U	5.0 U	5.0 U	5.0 U	5.0 U	2.0 U	5.0 U	5.0 U	2.0 U	5.0 U	2.0 U	5.0 U	5.0 U	2.0 U	2.0 U	5.0 U	5.0 U	2,000 U	200 U
	n-Propylbenzene	4,000[1]	50,000[1]	2.0 U	2.0 U	2.0 U	2.0 U	2.0 U	2.0 U	2.0 U	2.0 U	2.0 U	2.0 U	2.0 U	2.0 U	2.0 U	2.0 U	2.0 U	2.0 U	2.0 U	2.0 U	2.0 U	2.0 U	2.0 U	800 U	200 U
	1,2,3-Trichlorobenzene	NS	NS	2.0 U	2.0 U	2.0 U	2.0 U	2.0 U	2.0 U	2.0 U	2.0 U	2.0 U	2.0 U	2.0 U	2.0 U	2.0 U	2.0 U	2.0 U	2.0 U	2.0 U	2.0 U	2.0 U	2.0 U	2.0 U	800 U	200 U
	1,2,4-Trichlorobenzene	200	50,000	2.0 U	2.0 U	2.0 U	2.0 U	2.0 U	2.0 U	2.0 U	2.0 U	2.0 U	2.0 U	2.0 U	2.0 U	2.0 U	2.0 U	2.0 U	2.0 U	2.0 U	2.0 U	2.0 U	2.0 U	2.0 U	800 U	200 U
	1,3,5-Trimethylbenzene	4,000[1]	50,000[1]	2.0 U	2.0 U	2.0 U	2.0 U	2.0 U	2.0 U	2.0 U	2.0 U	2.0 U	2.0 U	2.0 U	2.0 U	2.0 U	2.0 U	2.0 U	2.0 U	2.0 U	2.0 U	2.0 U	2.0 U	2.0 U	800 U	200 U
	1,2,4-Trimethylbenzene	4,000[1]	50,000[1]	2.0 U	2.0 U	2.0 U	2.0 U	2.0 U	2.0 U	2.0 U	2.0 U	2.0 U	2.0 U	2.0 U	2.0 U	2.0 U	2.0 U	2.0 U	2.0 U	2.0 U	2.0 U	2.0 U	2.0 U	2.0 U	800 U	200 U
	Diethyl Ether	NS	NS	2.0 U	2.0 U	2.0 U	2.0 U	2.0 U	2.0 U	2.0 U	2.0 U	2.0 U	2.0 U	2.0 U	2.0 U	2.0 U	2.0 U	2.0 U	2.0 U	2.0 U	2.0 U	2.0 U	2.0 U	2.0 U	800 U	200 U
	Diisopropyl Ether (DIPE)	NS	NS	2.0 U	2.0 U	2.0 U	2.0 U	2.0 U	2.0 U	2.0 U	2.0 U	2.0 U	2.0 U	2.0 U	2.0 U	2.0 U	2.0 U	2.0 U	2.0 U	2.0 U	2.0 U	2.0 U	2.0 U	2.0 U	800 U	200 U
	tert-Butyl Ethyl Ether (TBEE)	NS	NS	2.0 U	2.0 U	2.0 U	2.0 U	2.0 U	2.0 U	2.0 U	2.0 U	2.0 U	2.0 U	2.0 U	2.0 U	2.0 U	2.0 U	2.0 U	2.0 U	2.0 U	2.0 U	2.0 U	2.0 U	2.0 U	800 U	200 U
	tert-Amyl Methyl Ether (TAME)	NS	NS	2.0 U	2.0 U	2.0 U	2.0 U	2.0 U	2.0 U	2.0 U	2.0 U	2.0 U	2.0 U	2.0 U	2.0 U	2.0 U	2.0 U	2.0 U	2.0 U	2.0 U	2.0 U	2.0 U	2.0 U	2.0 U	800 U	200 U
	1,4-Dioxane	6,000	50,000	250 U	250 U	250 U	250 U	250 U	250 U	250 U	250 U	250 U	250 U	250 U	250 U	250 U	250 U	250 U	250 U	250 U	250 U	250 U	250 U	250 U	100,000 U	25,000 U

Table 2
Summary of Analytical Results for Groundwater Samples -- 2008 through 2014
New Bedford High School
New Bedford, Massachusetts

Analysis	Analyte	Sample ID:		MW-18					MW-19	MW-20		MW-21		MW-22			MW-23		MW-24				MW-25	MW-26	MW-27	
		Filter Size (micron)^:		N/A	N/A	N/A	N/A	N/A	N/A	N/A	N/A	N/A	N/A	N/A	N/A	N/A	N/A	N/A	N/A	N/A	N/A	N/A	N/A	N/A	N/A	N/A
		Sample Date:		2/18/2010	4/9/2010	9/13/2010	4/28/2011	4/10/2012	2/18/2010	4/8/2010	9/10/2010	4/8/2010	9/13/2010	4/8/2010	4/8/2010 Field Dup	9/13/2010	4/8/2010	9/13/2010	4/8/2010	9/10/2010	10/21/2010	10/21/2010 Field Dup	9/8/2010	9/8/2010	9/9/2010	10/21/2010
		GW-2	GW-3																							
PAHs																										
(ug/L)	Acenaphthene	NS	10,000	NA	NA	NA	NA	NA	NA	NA	NA	NA	NA	NA	NA	NA	NA	NA	NA	NA	NA	NA	NA	NA	NA	NA
	Acenaphthylene	10,000	40	NA	NA	NA	NA	NA	NA	NA	NA	NA	NA	NA	NA	NA	NA	NA	NA	NA	NA	NA	NA	NA	NA	NA
	Anthracene	NS	30	NA	NA	NA	NA	NA	NA	NA	NA	NA	NA	NA	NA	NA	NA	NA	NA	NA	NA	NA	NA	NA	NA	NA
	Benzo(a)anthracene	NS	1,000	NA	NA	NA	NA	NA	NA	NA	NA	NA	NA	NA	NA	NA	NA	NA	NA	NA	NA	NA	NA	NA	NA	NA
	Benzo(a)pyrene	NS	500	NA	NA	NA	NA	NA	NA	NA	NA	NA	NA	NA	NA	NA	NA	NA	NA	NA	NA	NA	NA	NA	NA	NA
	Benzo(b)fluoranthene	NS	400	NA	NA	NA	NA	NA	NA	NA	NA	NA	NA	NA	NA	NA	NA	NA	NA	NA	NA	NA	NA	NA	NA	NA
	Benzo(g,h,i)perylene	NS	20	NA	NA	NA	NA	NA	NA	NA	NA	NA	NA	NA	NA	NA	NA	NA	NA	NA	NA	NA	NA	NA	NA	NA
	Benzo(k)fluoranthene	NS	100	NA	NA	NA	NA	NA	NA	NA	NA	NA	NA	NA	NA	NA	NA	NA	NA	NA	NA	NA	NA	NA	NA	NA
	Chrysene	NS	70	NA	NA	NA	NA	NA	NA	NA	NA	NA	NA	NA	NA	NA	NA	NA	NA	NA	NA	NA	NA	NA	NA	NA
	Dibenz(a,h)anthracene	NS	40	NA	NA	NA	NA	NA	NA	NA	NA	NA	NA	NA	NA	NA	NA	NA	NA	NA	NA	NA	NA	NA	NA	NA
	Fluoranthene	NS	200	NA	NA	NA	NA	NA	NA	NA	NA	NA	NA	NA	NA	NA	NA	NA	NA	NA	NA	NA	NA	NA	NA	NA
	Fluorene	NS	40	NA	NA	NA	NA	NA	NA	NA	NA	NA	NA	NA	NA	NA	NA	NA	NA	NA	NA	NA	NA	NA	NA	NA
	Indeno(1,2,3-cd)pyrene	NS	100	NA	NA	NA	NA	NA	NA	NA	NA	NA	NA	NA	NA	NA	NA	NA	NA	NA	NA	NA	NA	NA	NA	NA
	2-Methylnaphthalene	2,000	20,000	NA	NA	NA	NA	NA	NA	NA	NA	NA	NA	NA	NA	NA	NA	NA	NA	NA	NA	NA	NA	NA	NA	NA
	Naphthalene	700	20,000	NA	NA	NA	NA	NA	NA	NA	NA	NA	NA	NA	NA	NA	NA	NA	NA	NA	NA	NA	NA	NA	NA	NA
	Phenanthrene	NS	10,000	NA	NA	NA	NA	NA	NA	NA	NA	NA	NA	NA	NA	NA	NA	NA	NA	NA	NA	NA	NA	NA	NA	NA
	Pyrene	NS	20	NA	NA	NA	NA	NA	NA	NA	NA	NA	NA	NA	NA	NA	NA	NA	NA	NA	NA	NA	NA	NA	NA	NA
PCBs																										
(ug/L)	Aroclor 1016	5	10	NA	NA	NA	NA	0.0500 U	NA	NA	NA	NA	NA	NA	NA	NA	NA	NA	NA	NA	NA	NA	NA	NA	NA	NA
	Aroclor 1221	5	10	NA	NA	NA	NA	0.0500 U	NA	NA	NA	NA	NA	NA	NA	NA	NA	NA	NA	NA	NA	NA	NA	NA	NA	NA
	Aroclor 1232	5	10	NA	NA	NA	NA	0.0500 U	NA	NA	NA	NA	NA	NA	NA	NA	NA	NA	NA	NA	NA	NA	NA	NA	NA	NA
	Aroclor 1242	5	10	NA	NA	NA	NA	0.0500 U	NA	NA	NA	NA	NA	NA	NA	NA	NA	NA	NA	NA	NA	NA	NA	NA	NA	NA
	Aroclor 1248	5	10	NA	NA	NA	NA	0.0500 U	NA	NA	NA	NA	NA	NA	NA	NA	NA	NA	NA	NA	NA	NA	NA	NA	NA	NA
	Aroclor 1254	5	10	NA	NA	NA	NA	0.0500 U	NA	NA	NA	NA	NA	NA	NA	NA	NA	NA	NA	NA	NA	NA	NA	NA	NA	NA
	Aroclor 1260	5	10	NA	NA	NA	NA	0.0500 U	NA	NA	NA	NA	NA	NA	NA	NA	NA	NA	NA	NA	NA	NA	NA	NA	NA	NA
	Aroclor 1262	5	10	NA	NA	NA	NA	NA	NA	NA	NA	NA	NA	NA	NA	NA	NA	NA	NA	NA	NA	NA	NA	NA	NA	NA
	Aroclor 1268	5	10	NA	NA	NA	NA	NA	NA	NA	NA	NA	NA	NA	NA	NA	NA	NA	NA	NA	NA	NA	NA	NA	NA	NA
	Total PCBs	5	10	NA	NA	NA	NA	0.0500 U	NA	NA	NA	NA	NA	NA	NA	NA	NA	NA	NA	NA	NA	NA	NA	NA	NA	NA
Total Petroleum Hydrocarbons																										
(ug/L)	Total Petroleum Hydrocarbons (C9-C44	5,000	5,000	NA	NA	NA	NA	NA	NA	NA	NA	NA	NA	NA	NA	NA	NA	NA	NA	NA	NA	NA	NA	NA	NA	NA
Metals, total																										
(ug/L)	Antimony	NS	8,000	NA	NA	NA	NA	NA	NA	NA	NA	NA	NA	NA	NA	NA	NA	NA	NA	NA	NA	NA	NA	NA	NA	NA
	Arsenic	NS	900	NA	NA	NA	NA	NA	NA	NA	NA	NA	NA	NA	NA	NA	NA	NA	NA	NA	NA	NA	NA	NA	NA	NA
	Barium	NS	50,000	NA	NA	NA	NA	NA	NA	NA	NA	NA	NA	NA	NA	NA	NA	NA	NA	NA	NA	NA	NA	NA	NA	NA
	Beryllium	NS	200	NA	NA	NA	NA	NA	NA	NA	NA	NA	NA	NA	NA	NA	NA	NA	NA	NA	NA	NA	NA	NA	NA	NA
	Cadmium	NS	4	NA	NA	NA	NA	NA	NA	NA	NA	NA	NA	NA	NA	NA	NA	NA	NA	NA	NA	NA	NA	NA	NA	NA
	Chromium	NS	300	NA	NA	NA	NA	NA	NA	NA	NA	NA	NA	NA	NA	NA	NA	NA	NA	NA	NA	NA	NA	NA	NA	NA
	Lead	NS	10	NA	NA	NA	NA	NA	NA	NA	NA	NA	NA	NA	NA	NA	NA	NA	NA	NA	NA	NA	NA	NA	NA	NA
	Mercury	NS	20	NA	NA	NA	NA	NA	NA	NA	NA	NA	NA	NA	NA	NA	NA	NA	NA	NA	NA	NA	NA	NA	NA	NA
	Nickel	NS	200	NA	NA	NA	NA	NA	NA	NA	NA	NA	NA	NA	NA	NA	NA	NA	NA	NA	NA	NA	NA	NA	NA	NA
	Selenium	NS	100	NA	NA	NA	NA	NA	NA	NA	NA	NA	NA	NA	NA	NA	NA	NA	NA	NA	NA	NA	NA	NA	NA	NA
	Silver	NS	7	NA	NA	NA	NA	NA	NA	NA	NA	NA	NA	NA	NA	NA	NA	NA	NA	NA	NA	NA	NA	NA	NA	NA
	Thallium	NS	3,000	NA	NA	NA	NA	NA	NA	NA	NA	NA	NA	NA	NA	NA	NA	NA	NA	NA	NA	NA	NA	NA	NA	NA
	Vanadium	NS	4,000	NA	NA	NA	NA	NA	NA	NA	NA	NA	NA	NA	NA	NA	NA	NA	NA	NA	NA	NA	NA	NA	NA	NA
	Zinc	NS	900	NA	NA	NA	NA	NA	NA	NA	NA	NA	NA	NA	NA	NA	NA	NA	NA	NA	NA	NA	NA	NA	NA	NA
Metals, dissolved																										
(ug/L)	Antimony	NS	8,000	NA	NA	NA	NA	NA	NA	NA	NA	NA	NA	NA	NA	NA	NA	NA	NA	NA	NA	NA	NA	NA	NA	NA
	Arsenic	NS	900	NA	NA	NA	NA	NA	NA	NA	NA	NA	NA	NA	NA	NA	NA	NA	NA	NA	NA	NA	NA	NA	NA	NA
	Barium	NS	50,000	NA	NA	NA	NA	NA	NA	NA	NA	NA	NA	NA	NA	NA	NA	NA	NA	NA	NA	NA	NA	NA	NA	NA
	Beryllium	NS	200	NA	NA	NA	NA	NA	NA	NA	NA	NA	NA	NA	NA	NA	NA	NA	NA	NA	NA	NA	NA	NA	NA	NA
	Cadmium	NS	4	NA	NA	NA	NA	NA	NA	NA	NA	NA	NA	NA	NA	NA	NA	NA	NA	NA	NA	NA	NA	NA	NA	NA
	Chromium	NS	300	NA	NA	NA	NA	NA	NA	NA	NA	NA	NA	NA	NA	NA	NA	NA	NA	NA	NA	NA	NA	NA	NA	NA
	Lead	NS	10	NA	NA	NA	NA	NA	NA	NA	NA	NA	NA	NA	NA	NA	NA	NA	NA	NA	NA	NA	NA	NA	NA	NA
	Mercury	NS	20	NA	NA	NA	NA	NA	NA	NA	NA	NA	NA	NA	NA	NA	NA	NA	NA	NA	NA	NA	NA	NA	NA	NA
	Nickel	NS	200	NA	NA	NA	NA	NA	NA	NA	NA	NA	NA	NA	NA	NA	NA	NA	NA	NA	NA	NA	NA	NA	NA	NA
	Selenium	NS	100	NA	NA	NA	NA	NA	NA	NA	NA	NA	NA	NA	NA	NA	NA	NA	NA	NA	NA	NA	NA	NA	NA	NA
	Silver	NS	7	NA	NA	NA	NA	NA	NA	NA	NA	NA	NA	NA	NA	NA	NA	NA	NA	NA	NA	NA	NA	NA	NA	NA
	Thallium	NS	3,000	NA	NA	NA	NA	NA	NA	NA	NA	NA	NA	NA	NA	NA	NA	NA	NA	NA	NA	NA	NA	NA	NA	NA
	Vanadium	NS	4,000	NA	NA	NA	NA	NA	NA	NA	NA	NA	NA	NA	NA	NA	NA	NA	NA	NA	NA	NA	NA	NA	NA	NA
	Zinc	NS	900	NA	NA	NA	NA	NA	NA	NA	NA	NA	NA	NA	NA	NA	NA	NA	NA	NA	NA	NA	NA	NA	NA	NA
General Chemistry																										
(ug/L)	Nitrogen, Nitrate	NS	NS	NA	NA	NA	NA	NA	NA	NA	NA	NA	NA	NA	NA	NA	NA	NA	NA	NA	NA	NA	NA	NA	**1,000**	NA
	Sulfate	NS	NS	NA	NA	NA	NA	NA	NA	NA	NA	NA	NA	NA	NA	NA	NA	NA	NA	NA	NA	NA	NA	NA	**21,000**	NA
	Total Organic Carbon	NS	NS	NA	NA	NA	NA	NA	NA	NA	NA	NA	NA	NA	NA	NA	NA	NA	NA	NA	NA	NA	NA	NA	**8,700**	NA

Notes:
ug/L - micrograms per liter.
B - Compound detected in associated method blank
J - Estimated value.
NA - Sample not analyzed for the listed analyte.
N/A - Not applicable.
NS - No MassDEP standards exist for this compound.
U - Compound was not detected at specified quantitation limit.
Values in **Bold** indicate the compound was detected.
VOCs - Volatile Organic Compounds.
PAHs - Polynuclear Aromatic Hydrocarbons.
PCBs - Polychlorinated Biphenyls.
(1) - MassDEP Method 1 standards for C9-C10 aromatic hydrocarbons used.
(2) - MassDEP Method 1 standards for 1,3-Dichloropropene used.
^ - 0.45 micron filtration done in field; 0.20 and 2.0 micron filtration performed in lab.
* - Sample collected on 4/10/2012 for PCB analysis was broken and was recollected on 4/18/2012
** - Lab filtered sample using a 2.0 micron filter and then filtered a second time using a 0.20 micr

Table 2
Summary of Analytical Results for Groundwater Samples -- 2008 through 2014
New Bedford High School
New Bedford, Massachusetts

Analysis	Analyte	Sample ID:		MW-27D												
		Filter Size (micron)^\		N/A	N/A	N/A	N/A	N/A	N/A	N/A	N/A	N/A	N/A	N/A	N/A	N/A
		Sample Date:		11/18/2010	3/8/2011	3/25/2011	4/8/2011	4/29/2011	4/29/2011	7/27/2011	8/25/2011	2/27/2012	2/27/2012	4/11/2012	4/11/2012	12/13/2012
		GW-2	GW-3						Field Dup				Field Dup		Field Dup	
VOCs																
(ug/L)	Methylene Chloride	2,000	50,000	2.0 U	2.0 U	2.0 U	2.0 U	2.0 U	2.0 U	2.0 U	2.0 U	4.0 U	4.0 U	2.0 U	2.0 U	2.0 U
	1,1-Dichloroethane	2,000	20,000	1.0 U	1.0 U	1.0 U	1.0 U	1.0 U	1.0 U	1.0 U	1.0 U	2.0 U	2.0 U	1.0 U	1.0 U	1.0 U
	Chloroform	50	20,000	1.0 U	1.0 U	1.0 U	1.0 U	1.0 U	1.0 U	1.0 U	1.0 U	2.0 U	2.0 U	1.0 U	1.0 U	1.0 U
	Carbon Tetrachloride	2	5,000	1.0 U	1.0 U	1.0 U	1.0 U	1.0 U	1.0 U	1.0 U	1.0 U	2.0 U	2.0 U	1.0 U	1.0 U	1.0 U
	1,2-Dichloropropane	3	50,000	1.0 U	1.0 U	1.0 U	1.0 U	1.0 U	1.0 U	1.0 U	1.0 U	2.0 U	2.0 U	1.0 U	1.0 U	1.0 U
	Chlorodibromomethane	20	50,000	1.0 U	1.0 U	1.0 U	1.0 U	1.0 U	1.0 U	1.0 U	1.0 U	2.0 U	2.0 U	1.0 U	1.0 U	1.0 U
	1,1,2-Trichloroethane	900	50,000	1.0 U	1.0 U	1.0 U	1.0 U	1.0 U	1.0 U	1.0 U	1.0 U	2.0 U	2.0 U	1.0 U	1.0 U	1.0 U
	Tetrachloroethylene	50	30,000	1.0 U	1.0 U	1.0 U	1.0 U	1.0 U	1.0 U	1.0 U	1.0 U	2.0 U	2.0 U	1.0 U	1.0 U	1.0 U
	Chlorobenzene	200	1,000	1.0 U	1.0 U	1.0 U	1.0 U	1.0 U	1.0 U	1.0 U	1.0 U	2.0 U	2.0 U	1.0 U	1.0 U	1.0 U
	Trichlorofluoromethane (Freon 11)	NS	NS	2.0 U	2.0 U	2.0 U	2.0 U	2.0 U	2.0 U	2.0 U	2.0 U	4.0 U	4.0 U	2.0 U	2.0 U	2.0 U
	1,2-Dichloroethane	5	20,000	1.0 U	1.0 U	1.0 U	1.0 U	1.0 U	1.0 U	1.0 U	1.0 U	2.0 U	2.0 U	1.0 U	1.0 U	1.0 U
	1,1,1-Trichloroethane	4,000	20,000	1.0 U	1.0 U	1.0 U	1.0 U	1.0 U	1.0 U	1.0 U	1.0 U	2.0 U	2.0 U	1.0 U	1.0 U	1.0 U
	Bromodichloromethane	6	50,000	1.0 U	1.0 U	1.0 U	1.0 U	1.0 U	1.0 U	1.0 U	1.0 U	2.0 U	2.0 U	1.0 U	1.0 U	1.0 U
	trans-1,3-Dichloropropene	10(2)	200(2)	0.50 U	0.50 U	0.50 U	0.50 U	0.50 U	0.50 U	0.50 U	0.50 U	1.0 U	1.0 U	0.50 U	0.50 U	0.50 U
	cis-1,3-Dichloropropene	10(2)	200(2)	0.50 U	0.50 U	0.50 U	0.50 U	0.50 U	0.50 U	0.50 U	0.50 U	1.0 U	1.0 U	0.50 U	0.50 U	0.50 U
	1,1-Dichloropropene	NS	NS	2.0 U	2.0 U	2.0 U	2.0 U	2.0 U	2.0 U	2.0 U	2.0 U	4.0 U	4.0 U	2.0 U	2.0 U	2.0 U
	Bromoform	700	50,000	2.0 U	2.0 U	2.0 U	2.0 U	2.0 U	2.0 U	2.0 U	2.0 U	4.0 U	4.0 U	2.0 U	2.0 U	2.0 U
	1,1,2,2-Tetrachloroethane	9	50,000	1.0 U	1.0 U	1.0 U	1.0 U	1.0 U	1.0 U	1.0 U	1.0 U	2.0 U	2.0 U	1.0 U	1.0 U	1.0 U
	Benzene	1,000	10,000	1.0 U	1.0 U	1.0 U	1.0 U	1.0 U	1.0 U	0.50 U	0.50 U	1.0 U	1.0 U	0.50 U	0.50 U	0.50 U
	Toluene	50,000	40,000	1.0 U	1.0 U	1.0 U	1.0 U	1.0 U	1.0 U	1.0 U	1.0 U	2.0 U	2.0 U	1.0 U	1.0 U	1.0 U
	Ethylbenzene	20,000	5,000	1.0 U	1.0 U	1.0 U	1.0 U	1.0 U	1.0 U	1.0 U	1.0 U	2.0 U	2.0 U	1.0 U	1.0 U	1.0 U
	Chloromethane	NS	NS	2.0 U	2.0 U	2.0 U	2.0 U	2.0 U	2.0 U	2.0 U	2.0 U	4.0 U	4.0 U	2.0 U	2.0 U	2.0 U
	Bromomethane	7	800	2.0 U	2.0 U	2.0 U	2.0 U	2.0 U	2.0 U	2.0 U	2.0 U	4.0 U	4.0 U	2.0 U	2.0 U	2.0 U
	Vinyl Chloride	2	50,000	1.0 U	1.0 U	1.0 U	1.0 U	1.0 U	1.0 U	**35**	**9.8**	**26**	**28**	1.0 U	1.0 U	1.0 U
	Chloroethane	NS	NS	2.0 U	2.0 U	2.0 U	2.0 U	2.0 U	2.0 U	2.0 U	2.0 U	4.0 U	4.0 U	2.0 U	2.0 U	2.0 U
	1,1-Dichloroethylene	80	30,000	1.0 U	1.0 U	1.0 U	1.0 U	1.0 U	1.0 U	1.0 U	1.0 U	2.0 U	2.0 U	1.0 U	1.0 U	1.0 U
	trans-1,2-Dichloroethylene	80	50,000	1.0 U	1.0 U	1.0 U	1.0 U	1.0 U	1.0 U	**7.5**	**2.2**	**22**	**23**	1.0 U	1.0 U	1.0 U
	Trichloroethylene	5	5,000	1.0 U	**1.4**	**0.71 J**	**1.7**	**3.8**	**3.8**	**15**	**4.8**	**2.9**	**3.9**	1.0 U	1.0 U	1.0 U
	1,2-Dichlorobenzene	8,000	2,000	1.0 U	1.0 U	1.0 U	1.0 U	1.0 U	1.0 U	1.0 U	1.0 U	2.0 U	2.0 U	1.0 U	1.0 U	1.0 U
	1,3-Dichlorobenzene	6,000	50,000	1.0 U	1.0 U	1.0 U	1.0 U	1.0 U	1.0 U	1.0 U	1.0 U	2.0 U	2.0 U	1.0 U	1.0 U	1.0 U
	1,4-Dichlorobenzene	60	8,000	1.0 U	1.0 U	1.0 U	1.0 U	1.0 U	1.0 U	**3.0**	**1.3**	2.0 U	2.0 U	1.0 U	1.0 U	1.0 U
	Methyl tert-Butyl Ether (MTBE)	50,000	50,000	2.0 U	2.0 U	2.0 U	2.0 U	2.0 U	2.0 U	2.0 U	2.0 U	4.0 U	4.0 U	2.0 U	2.0 U	2.0 U
	m+p Xylene	2	50,000	2.0 U	2.0 U	2.0 U	2.0 U	2.0 U	2.0 U	2.0 U	2.0 U	4.0 U	4.0 U	2.0 U	2.0 U	2.0 U
	o-Xylene	2	50,000	1.0 U	1.0 U	1.0 U	1.0 U	1.0 U	1.0 U	1.0 U	1.0 U	2.0 U	2.0 U	1.0 U	1.0 U	1.0 U
	cis-1,2-Dichloroethylene	20	50,000	1.0 U	1.0 U	1.0 U	1.0 U	1.0 U	1.0 U	**45**	**12**	**110**	**120**	1.0 U	1.0 U	1.0 U
	Dibromomethane	NS	NS	2.0 U	2.0 U	2.0 U	2.0 U	2.0 U	2.0 U	2.0 U	2.0 U	4.0 U	4.0 U	2.0 U	2.0 U	2.0 U
	1,2,3-Trichloropropane	NS	NS	2.0 U	2.0 U	2.0 U	2.0 U	2.0 U	2.0 U	2.0 U	2.0 U	4.0 U	4.0 U	2.0 U	2.0 U	2.0 U
	Styrene	100	6,000	1.0 U	1.0 U	1.0 U	1.0 U	1.0 U	1.0 U	1.0 U	1.0 U	2.0 U	2.0 U	1.0 U	1.0 U	1.0 U
	Dichlorodifluoromethane (Freon 12)	NS	NS	2.0 U	2.0 U	2.0 U	2.0 U	2.0 U	2.0 U	2.0 U	2.0 U	4.0 U	4.0 U	2.0 U	2.0 U	2.0 U
	Acetone	50,000	50,000	5.0 U	5.0 U	5.0 U	5.0 U	5.0 U	5.0 U	5.0 U	5.0 U	10.0 U	10.0 U	5.0 U	5.0 U	5.0 U
	Carbon Disulfide	NS	NS	2.0 U	2.0 U	2.0 U	2.0 U	2.0 U	2.0 U	2.0 U	2.0 U	4.0 U	4.0 U	2.0 U	2.0 U	2.0 U
	2-Butanone (MEK)	50,000	50,000	5.0 U	5.0 U	5.0 U	5.0 U	5.0 U	5.0 U	5.0 U	5.0 U	10.0 U	10.0 U	5.0 U	5.0 U	5.0 U
	4-Methyl-2-pentanone (MIBK)	50,000	50,000	5.0 U	5.0 U	5.0 U	5.0 U	5.0 U	5.0 U	5.0 U	5.0 U	10.0 U	10.0 U	5.0 U	5.0 U	5.0 U
	2-Hexanone (MBK)	NS	NS	5.0 U	5.0 U	5.0 U	5.0 U	5.0 U	5.0 U	5.0 U	5.0 U	10.0 U	10.0 U	5.0 U	5.0 U	5.0 U
	Bromochloromethane	NS	NS	2.0 U	2.0 U	2.0 U	2.0 U	2.0 U	2.0 U	2.0 U	2.0 U	4.0 U	4.0 U	2.0 U	2.0 U	2.0 U
	Tetrahydrofuran	NS	NS	10 U	5.0 U	5.0 U	5.0 U	5.0 U	5.0 U	5.0 U	5.0 U	10.0 U	10.0 U	5.0 U	5.0 U	5.0 U
	2,2-Dichloropropane	NS	NS	2.0 U	2.0 U	2.0 U	2.0 U	2.0 U	2.0 U	2.0 U	2.0 U	4.0 U	4.0 U	2.0 U	2.0 U	2.0 U
	1,2-Dibromoethane (EDB)	2	50,000	2.0 U	2.0 U	2.0 U	2.0 U	2.0 U	2.0 U	2.0 U	2.0 U	4.0 U	4.0 U	2.0 U	2.0 U	2.0 U
	1,3-Dichloropropane	NS	NS	2.0 U	2.0 U	2.0 U	2.0 U	2.0 U	2.0 U	2.0 U	2.0 U	4.0 U	4.0 U	2.0 U	2.0 U	2.0 U
	1,1,1,2-Tetrachloroethane	10	50,000	1.0 U	1.0 U	1.0 U	1.0 U	1.0 U	1.0 U	1.0 U	1.0 U	2.0 U	2.0 U	1.0 U	1.0 U	1.0 U
	Bromobenzene	NS	NS	2.0 U	2.0 U	2.0 U	2.0 U	2.0 U	2.0 U	2.0 U	2.0 U	4.0 U	4.0 U	2.0 U	2.0 U	2.0 U
	n-Butylbenzene	4,000(1)	50,000(1)	2.0 U	2.0 U	2.0 U	2.0 U	2.0 U	2.0 U	2.0 U	2.0 U	4.0 U	4.0 U	2.0 U	2.0 U	2.0 U
	sec-Butylbenzene	4,000(1)	50,000(1)	2.0 U	2.0 U	2.0 U	2.0 U	2.0 U	2.0 U	2.0 U	2.0 U	4.0 U	4.0 U	2.0 U	2.0 U	2.0 U
	tert-Butylbenzene	4,000(1)	50,000(1)	2.0 U	2.0 U	2.0 U	2.0 U	2.0 U	2.0 U	2.0 U	2.0 U	4.0 U	4.0 U	2.0 U	2.0 U	2.0 U
	2-Chlorotoluene	NS	NS	2.0 U	2.0 U	2.0 U	2.0 U	2.0 U	2.0 U	2.0 U	2.0 U	4.0 U	4.0 U	2.0 U	2.0 U	2.0 U
	4-Chlorotoluene	NS	NS	2.0 U	2.0 U	2.0 U	2.0 U	2.0 U	2.0 U	2.0 U	2.0 U	4.0 U	4.0 U	2.0 U	2.0 U	2.0 U
	1,2-Dibromo-3-chloropropane (DBCP)	NS	NS	2.0 U	2.0 U	2.0 U	2.0 U	2.0 U	2.0 U	2.0 U	2.0 U	4.0 U	4.0 U	2.0 U	2.0 U	2.0 U
	Hexachlorobutadiene	50	3,000	0.60 U	0.60 U	0.60 U	0.60 U	0.60 U	0.60 U	0.60 U	0.60 U	1.2 U	1.2 U	0.60 U	0.60 U	0.60 U
	Isopropylbenzene (Cumene)	4,000(1)	50,000(1)	2.0 U	2.0 U	2.0 U	2.0 U	2.0 U	2.0 U	2.0 U	2.0 U	4.0 U	4.0 U	2.0 U	2.0 U	2.0 U
	p-Isopropyltoluene (p-Cymene)	4,000(1)	50,000(1)	2.0 U	2.0 U	2.0 U	2.0 U	2.0 U	2.0 U	2.0 U	2.0 U	4.0 U	4.0 U	2.0 U	2.0 U	2.0 U
	Naphthalene	700	20,000	2.0 U	2.0 U	2.0 U	2.0 U	2.0 U	2.0 U	2.0 U	2.0 U	4.0 U	4.0 U	2.0 U	2.0 U	2.0 U
	n-Propylbenzene	4,000(1)	50,000(1)	2.0 U	2.0 U	2.0 U	2.0 U	2.0 U	2.0 U	2.0 U	2.0 U	4.0 U	4.0 U	2.0 U	2.0 U	2.0 U
	1,2,3-Trichlorobenzene	NS	NS	2.0 U	2.0 U	2.0 U	2.0 U	2.0 U	2.0 U	2.0 U	2.0 U	4.0 U	4.0 U	2.0 U	2.0 U	2.0 U
	1,2,4-Trichlorobenzene	200	50,000	2.0 U	2.0 U	2.0 U	2.0 U	2.0 U	2.0 U	2.0 U	2.0 U	4.0 U	4.0 U	2.0 U	2.0 U	2.0 U
	1,3,5-Trimethylbenzene	4,000(1)	50,000(1)	2.0 U	2.0 U	2.0 U	2.0 U	2.0 U	2.0 U	2.0 U	2.0 U	4.0 U	4.0 U	2.0 U	2.0 U	2.0 U
	1,2,4-Trimethylbenzene	4,000(1)	50,000(1)	2.0 U	2.0 U	2.0 U	2.0 U	2.0 U	2.0 U	2.0 U	2.0 U	4.0 U	4.0 U	2.0 U	2.0 U	2.0 U
	Diethyl Ether	NS	NS	2.0 U	2.0 U	2.0 U	2.0 U	2.0 U	2.0 U	2.0 U	2.0 U	4.0 U	4.0 U	2.0 U	2.0 U	2.0 U
	Diisopropyl Ether (DIPE)	NS	NS	2.0 U	2.0 U	2.0 U	2.0 U	2.0 U	2.0 U	2.0 U	2.0 U	4.0 U	4.0 U	2.0 U	2.0 U	2.0 U
	tert-Butyl Ethyl Ether (TBEE)	NS	NS	2.0 U	2.0 U	2.0 U	2.0 U	2.0 U	2.0 U	2.0 U	2.0 U	4.0 U	4.0 U	2.0 U	2.0 U	2.0 U
	tert-Amyl Methyl Ether (TAME)	NS	NS	2.0 U	2.0 U	2.0 U	2.0 U	2.0 U	2.0 U	2.0 U	2.0 U	4.0 U	4.0 U	2.0 U	2.0 U	2.0 U
	1,4-Dioxane	6,000	50,000	250 U	250 U	250 U	250 U	250 U	250 U	250 U	250 U	500 U	500 U	250 U	250 U	250 U

Table 2
Summary of Analytical Results for Groundwater Samples -- 2008 through 2014
New Bedford High School
New Bedford, Massachusetts

Analysis	Analyte	Sample ID:		MW-27D												
		Filter Size (micron)^:		N/A	N/A	N/A	N/A	N/A	N/A	N/A	N/A	N/A	N/A	N/A	N/A	N/A
		Sample Date:		11/18/2010	3/8/2011	3/25/2011	4/8/2011	4/29/2011	4/29/2011 Field Dup	7/27/2011	8/25/2011	2/27/2012	2/27/2012 Field Dup	4/11/2012	4/11/2012 Field Dup	12/13/2012
		GW-2	GW-3													
PAHs																
(ug/L)	Acenaphthene	NS	10,000	NA	NA	NA	NA	NA	NA	NA	NA	NA	NA	NA	NA	NA
	Acenaphthylene	10,000	40	NA	NA	NA	NA	NA	NA	NA	NA	NA	NA	NA	NA	NA
	Anthracene	NS	30	NA	NA	NA	NA	NA	NA	NA	NA	NA	NA	NA	NA	NA
	Benzo(a)anthracene	NS	1,000	NA	NA	NA	NA	NA	NA	NA	NA	NA	NA	NA	NA	NA
	Benzo(a)pyrene	NS	500	NA	NA	NA	NA	NA	NA	NA	NA	NA	NA	NA	NA	NA
	Benzo(b)fluoranthene	NS	400	NA	NA	NA	NA	NA	NA	NA	NA	NA	NA	NA	NA	NA
	Benzo(g,h,i)perylene	NS	20	NA	NA	NA	NA	NA	NA	NA	NA	NA	NA	NA	NA	NA
	Benzo(k)fluoranthene	NS	100	NA	NA	NA	NA	NA	NA	NA	NA	NA	NA	NA	NA	NA
	Chrysene	NS	70	NA	NA	NA	NA	NA	NA	NA	NA	NA	NA	NA	NA	NA
	Dibenz(a,h)anthracene	NS	40	NA	NA	NA	NA	NA	NA	NA	NA	NA	NA	NA	NA	NA
	Fluoranthene	NS	200	NA	NA	NA	NA	NA	NA	NA	NA	NA	NA	NA	NA	NA
	Fluorene	NS	40	NA	NA	NA	NA	NA	NA	NA	NA	NA	NA	NA	NA	NA
	Indeno(1,2,3-cd)pyrene	NS	100	NA	NA	NA	NA	NA	NA	NA	NA	NA	NA	NA	NA	NA
	2-Methylnaphthalene	2,000	20,000	NA	NA	NA	NA	NA	NA	NA	NA	NA	NA	NA	NA	NA
	Naphthalene	700	20,000	NA	NA	NA	NA	NA	NA	NA	NA	NA	NA	NA	NA	NA
	Phenanthrene	NS	10,000	NA	NA	NA	NA	NA	NA	NA	NA	NA	NA	NA	NA	NA
	Pyrene	NS	20	NA	NA	NA	NA	NA	NA	NA	NA	NA	NA	NA	NA	NA
PCBs																
(ug/L)	Aroclor 1016	5	10	NA	NA	NA	NA	NA	NA	NA	0.150 U	0.10 U	NA	0.0500 U	0.0500 U	0.25 U
	Aroclor 1221	5	10	NA	NA	NA	NA	NA	NA	NA	0.150 U	0.10 U	NA	0.0500 U	0.0500 U	0.25 U
	Aroclor 1232	5	10	NA	NA	NA	NA	NA	NA	NA	0.150 U	0.10 U	NA	0.0500 U	0.0500 U	0.25 U
	Aroclor 1242	5	10	NA	NA	NA	NA	NA	NA	NA	0.150 U	0.10 U	NA	0.0500 U	0.0500 U	0.25 U
	Aroclor 1248	5	10	NA	NA	NA	NA	NA	NA	NA	**0.358**	**0.206**	NA	0.0500 U	0.0500 U	0.25 U
	Aroclor 1254	5	10	NA	NA	NA	NA	NA	NA	NA	**1.20**	**0.605**	NA	**0.0973 J**	**0.102 J**	0.25 U
	Aroclor 1260	5	10	NA	NA	NA	NA	NA	NA	NA	0.150 U	0.10 U	NA	0.0500 U	0.0500 U	0.25 U
	Aroclor 1262	5	10	NA	NA	NA	NA	NA	NA	NA	NA	NA	NA	NA	NA	0.25 U
	Aroclor 1268	5	10	NA	NA	NA	NA	NA	NA	NA	NA	NA	NA	NA	NA	0.25 U
	Total PCBs	5	10	NA	NA	NA	NA	NA	NA	NA	**1.558**	**0.811**	NA	**0.0973 J**	**0.102 J**	0.25 U
Total Petroleum Hydrocarbons																
(ug/L)	Total Petroleum Hydrocarbons (C9-C44	5,000	5,000	NA	NA	NA	NA	NA	NA	NA	NA	NA	NA	NA	NA	NA
Metals, total																
(ug/L)	Antimony	NS	8,000	NA	NA	NA	NA	NA	NA	NA	NA	NA	NA	NA	NA	NA
	Arsenic	NS	900	NA	NA	NA	NA	NA	NA	NA	NA	NA	NA	NA	NA	NA
	Barium	NS	50,000	NA	NA	NA	NA	NA	NA	NA	NA	NA	NA	NA	NA	NA
	Beryllium	NS	200	NA	NA	NA	NA	NA	NA	NA	NA	NA	NA	NA	NA	NA
	Cadmium	NS	4	NA	NA	NA	NA	NA	NA	NA	NA	NA	NA	NA	NA	NA
	Chromium	NS	300	NA	NA	NA	NA	NA	NA	NA	NA	NA	NA	NA	NA	NA
	Lead	NS	10	NA	NA	NA	NA	NA	NA	NA	NA	NA	NA	NA	NA	NA
	Mercury	NS	20	NA	NA	NA	NA	NA	NA	NA	NA	NA	NA	NA	NA	NA
	Nickel	NS	200	NA	NA	NA	NA	NA	NA	NA	NA	NA	NA	NA	NA	NA
	Selenium	NS	100	NA	NA	NA	NA	NA	NA	NA	NA	NA	NA	NA	NA	NA
	Silver	NS	7	NA	NA	NA	NA	NA	NA	NA	NA	NA	NA	NA	NA	NA
	Thallium	NS	3,000	NA	NA	NA	NA	NA	NA	NA	NA	NA	NA	NA	NA	NA
	Vanadium	NS	4,000	NA	NA	NA	NA	NA	NA	NA	NA	NA	NA	NA	NA	NA
	Zinc	NS	900	NA	NA	NA	NA	NA	NA	NA	NA	NA	NA	NA	NA	NA
Metals, dissolved																
(ug/L)	Antimony	NS	8,000	NA	NA	NA	NA	NA	NA	NA	NA	NA	NA	NA	NA	NA
	Arsenic	NS	900	NA	NA	NA	NA	NA	NA	NA	NA	NA	NA	NA	NA	NA
	Barium	NS	50,000	NA	NA	NA	NA	NA	NA	NA	NA	NA	NA	NA	NA	NA
	Beryllium	NS	200	NA	NA	NA	NA	NA	NA	NA	NA	NA	NA	NA	NA	NA
	Cadmium	NS	4	NA	NA	NA	NA	NA	NA	NA	NA	NA	NA	NA	NA	NA
	Chromium	NS	300	NA	NA	NA	NA	NA	NA	NA	NA	NA	NA	NA	NA	NA
	Lead	NS	10	NA	NA	NA	NA	NA	NA	NA	NA	NA	NA	NA	NA	NA
	Mercury	NS	20	NA	NA	NA	NA	NA	NA	NA	NA	NA	NA	NA	NA	NA
	Nickel	NS	200	NA	NA	NA	NA	NA	NA	NA	NA	NA	NA	NA	NA	NA
	Selenium	NS	100	NA	NA	NA	NA	NA	NA	NA	NA	NA	NA	NA	NA	NA
	Silver	NS	7	NA	NA	NA	NA	NA	NA	NA	NA	NA	NA	NA	NA	NA
	Thallium	NS	3,000	NA	NA	NA	NA	NA	NA	NA	NA	NA	NA	NA	NA	NA
	Vanadium	NS	4,000	NA	NA	NA	NA	NA	NA	NA	NA	NA	NA	NA	NA	NA
	Zinc	NS	900	NA	NA	NA	NA	NA	NA	NA	NA	NA	NA	NA	NA	NA
General Chemistry																
(ug/L)	Nitrogen, Nitrate	NS	NS	NA	NA	NA	NA	NA	NA	NA	NA	NA	NA	NA	NA	NA
	Sulfate	NS	NS	NA	NA	NA	NA	NA	NA	NA	NA	NA	NA	NA	NA	NA
	Total Organic Carbor	NS	NS	NA	NA	NA	NA	NA	NA	NA	NA	NA	NA	NA	NA	NA

Notes:
ug/L - micrograms per liter.
B - Compound detected in associated method blank
J - Estimated value.
NA - Sample not analyzed for the listed analyte.
N/A - Not applicable.
NS - No MassDEP standards exist for this compound.
U - Compound was not detected at specified quantitation limit.
Values in **Bold** indicate the compound was detected.
VOCs - Volatile Organic Compounds.
PAHs - Polynuclear Aromatic Hydrocarbons.
PCBs - Polychlorinated Biphenyls.
(1) - MassDEP Method 1 standards for C9-C10 aromatic hydrocarbons used.
(2) - MassDEP Method 1 standards for 1,3-Dichloropropene used.
^ - 0.45 micron filtration done in field; 0.20 and 2.0 micron filtration performed in lab.
* - Sample collected on 4/10/2012 for PCB analysis was broken and was recollected on 4/18/2012
** - Lab filtered sample using a 2.0 micron filter and then filtered a second time using a 0.20 micr

Table 2
Summary of Analytical Results for Groundwater Samples -- 2008 through 2014
New Bedford High School
New Bedford, Massachusetts

Analysis	Analyte	Sample ID:		MW-27R																				
		Filter Size (micron)^\:		N/A	N/A	N/A	N/A	N/A	N/A	N/A	N/A	N/A	N/A	N/A	N/A	N/A	N/A	N/A	N/A	0.45	0.20	N/A	0.45	0.20
		Sample Date:		3/8/2011	3/8/2011	3/25/2011	4/8/2011	4/29/2011	7/27/2011	7/27/2011	8/2/2011	8/25/2011	8/25/2011	2/27/2012	2/27/2012	9/18/2012	10/18/2012	12/14/2012	2/14/2014	2/14/2014	2/14/2014	2/21/2014	2/21/2014	2/21/2014
		GW-2	GW-3		Field Dup					Field Dup			Field Dup		Field Dup									
VOCs																								
(ug/L)	Methylene Chloride	2,000	50,000	4,000 U	4,000 U	4,000 U	2,000 U	1,000 U	400 U	200 U	500 U	400 U	400 U	200 U	NA	4.0 U	2.0 U	2.0 U	2.0 U	NA	NA	2.0 U	NA	NA
	1,1-Dichloroethane	2,000	20,000	2,000 U	2,000 U	2,000 U	1,000 U	500 U	200 U	100 U	250 U	200 U	200 U	100 U	NA	2.0 U	1.0 U	1.0 U	1.0 U	NA	NA	1.0 U	NA	NA
	Chloroform	50	20,000	2,000 U	2,000 U	2,000 U	1,000 U	500 U	200 U	100 U	250 U	200 U	200 U	100 U	NA	2.0 U	1.0 U	1.0 U	1.0 U	NA	NA	1.0 U	NA	NA
	Carbon Tetrachloride	2	5,000	2,000 U	2,000 U	2,000 U	1,000 U	500 U	200 U	100 U	250 U	200 U	200 U	100 U	NA	2.0 U	1.0 U	1.0 U	1.0 U	NA	NA	1.0 U	NA	NA
	1,2-Dichloropropane	3	50,000	2,000 U	2,000 U	2,000 U	1,000 U	500 U	200 U	100 U	250 U	200 U	200 U	100 U	NA	2.0 U	1.0 U	1.0 U	1.0 U	NA	NA	1.0 U	NA	NA
	Chlorodibromomethane	20	50,000	2,000 U	2,000 U	2,000 U	1,000 U	500 U	200 U	100 U	250 U	200 U	200 U	100 U	NA	2.0 U	1.0 U	1.0 U	1.0 U	NA	NA	1.0 U	NA	NA
	1,1,2-Trichloroethane	900	50,000	2,000 U	2,000 U	2,000 U	1,000 U	500 U	200 U	100 U	250 U	200 U	200 U	100 U	NA	2.0 U	1.0 U	1.0 U	1.0 U	NA	NA	1.0 U	NA	NA
	Tetrachloroethylene	50	30,000	2,000 U	2,000 U	2,000 U	1,000 U	500 U	200 U	100 U	250 U	200 U	200 U	100 U	NA	2.0 U	1.0 U	1.0 U	1.0 U	NA	NA	1.0 U	NA	NA
	Chlorobenzene	200	1,000	2,000 U	2,000 U	2,000 U	1,000 U	500 U	200 U	100 U	250 U	200 U	200 U	100 U	NA	**2.7**	**1.2**	**1.5**	1.0 U	NA	NA	1.0 U	NA	NA
	Trichlorofluoromethane (Freon 11)	NS	NS	4,000 U	4,000 U	4,000 U	2,000 U	1,000 U	400 U	200 U	500 U	400 U	400 U	200 U	NA	4.0 U	2.0 U	2.0 U	2.0 U	NA	NA	2.0 U	NA	NA
	1,2-Dichloroethane	5	20,000	2,000 U	2,000 U	2,000 U	1,000 U	500 U	200 U	100 U	250 U	200 U	200 U	100 U	NA	2.0 U	1.0 U	1.0 U	1.0 U	NA	NA	1.0 U	NA	NA
	1,1,1-Trichloroethane	4,000	20,000	2,000 U	2,000 U	2,000 U	1,000 U	500 U	200 U	100 U	250 U	200 U	200 U	100 U	NA	2.0 U	1.0 U	1.0 U	1.0 U	NA	NA	1.0 U	NA	NA
	Bromodichloromethane	6	50,000	2,000 U	2,000 U	2,000 U	1,000 U	500 U	200 U	100 U	250 U	200 U	200 U	100 U	NA	2.0 U	1.0 U	1.0 U	1.0 U	NA	NA	1.0 U	NA	NA
	trans-1,3-Dichloropropene	10(2)	200(2)	1,000 U	1,000 U	1,000 U	500 U	250 U	100 U	50 U	120 U	100 U	100 U	50 U	NA	1.0 U	0.50 U	0.50 U	0.50 U	NA	NA	0.50 U	NA	NA
	cis-1,3-Dichloropropene	10(2)	200(2)	1,000 U	1,000 U	1,000 U	500 U	250 U	100 U	50 U	120 U	100 U	100 U	50 U	NA	1.0 U	0.50 U	0.50 U	0.50 U	NA	NA	0.50 U	NA	NA
	1,1-Dichloropropene	NS	NS	4,000 U	4,000 U	4,000 U	2,000 U	1,000 U	400 U	200 U	500 U	400 U	400 U	200 U	NA	4.0 U	2.0 U	2.0 U	2.0 U	NA	NA	2.0 U	NA	NA
	Bromoform	700	50,000	4,000 U	4,000 U	4,000 U	2,000 U	1,000 U	400 U	200 U	500 U	400 U	400 U	200 U	NA	4.0 U	2.0 U	2.0 U	2.0 U	NA	NA	2.0 U	NA	NA
	1,1,2,2-Tetrachloroethane	9	50,000	2,000 U	2,000 U	2,000 U	1,000 U	500 U	200 U	100 U	250 U	200 U	200 U	100 U	NA	2.0 U	1.0 U	1.0 U	1.0 U	NA	NA	1.0 U	NA	NA
	Benzene	1,000	10,000	2,000 U	2,000 U	2,000 U	1,000 U	500 U	100 U	50 U	120 U	100 U	100 U	50 U	NA	1.0 U	0.50 U	0.50 U	0.50 U	NA	NA	0.50 U	NA	NA
	Toluene	50,000	40,000	2,000 U	2,000 U	2,000 U	1,000 U	500 U	200 U	100 U	250 U	200 U	200 U	100 U	NA	2.0 U	1.0 U	1.0 U	**2.9**	NA	NA	1.0 U	NA	NA
	Ethylbenzene	20,000	5,000	2,000 U	2,000 U	2,000 U	1,000 U	500 U	200 U	100 U	250 U	200 U	200 U	100 U	NA	**7.7**	**3.1**	**5.8**	1.0 U	NA	NA	1.0 U	NA	NA
	Chloromethane	NS	NS	4,000 U	4,000 U	4,000 U	2,000 U	1,000 U	400 U	200 U	500 U	400 U	400 U	200 U	NA	4.0 U	2.0 U	2.0 U	2.0 U	NA	NA	2.0 U	NA	NA
	Bromomethane	7	800	4,000 U	4,000 U	4,000 U	2,000 U	1,000 U	400 U	200 U	500 U	400 U	400 U	200 U	NA	4.0 U	2.0 U	2.0 U	2.0 U	NA	NA	2.0 U	NA	NA
	Vinyl Chloride	2	50,000	2,000 U	2,000 U	2,000 U	1,000 U	500 U	**1,900**	**1,300**	**510**	**1,000**	**990**	**1,800**	NA	**24**	**4.1**	**16**	1.0 U	NA	NA	1.0 U	NA	NA
	Chloroethane	NS	NS	4,000 U	4,000 U	4,000 U	2,000 U	1,000 U	400 U	200 U	500 U	400 U	400 U	200 U	NA	4.0 U	2.0 U	2.0 U	2.0 U	NA	NA	2.0 U	NA	NA
	1,1-Dichloroethylene	80	30,000	2,000 U	2,000 U	2,000 U	1,000 U	500 U	200 U	100 U	250 U	200 U	200 U	100 U	NA	2.0 U	1.0 U	1.0 U	1.0 U	NA	NA	1.0 U	NA	NA
	trans-1,2-Dichloroethylene	80	50,000	**2,500**	**2,500**	**2,600**	**1,900**	**1,400**	**2,200**	**1,700**	**940**	**1,700**	**1,700**	**1,700**	NA	**23**	**6.0**	**9.2**	1.0 U	NA	NA	1.0 U	NA	NA
	Trichloroethylene	5	5,000	**210,000**	**180,000**	**410,000**	**130,000**	**38,000**	**16,000**	**13,000**	**23,000**	**27,000**	**28,000**	**4,300**	NA	**31**	**6.9**	**5.8**	**1.2**	NA	NA	**7.6**	NA	NA
	1,2-Dichlorobenzene	8,000	2,000	2,000 U	2,000 U	2,000 U	1,000 U	500 U	200 U	100 U	250 U	200 U	200 U	100 U	NA	**4.9**	**3.0**	**2.7**	1.0 U	NA	NA	1.0 U	NA	NA
	1,3-Dichlorobenzene	6,000	50,000	2,000 U	2,000 U	2,000 U	1,000 U	500 U	200 U	100 U	250 U	200 U	200 U	100 U	NA	**14**	**6.8**	**7.8**	**1.2**	NA	NA	**1.0**	NA	NA
	1,4-Dichlorobenzene	60	8,000	2,000 U	2,000 U	2,000 U	1,000 U	500 U	200 U	100 U	250 U	200 U	200 U	100 U	NA	**67**	**38**	**40**	**4.8**	NA	NA	**4.4**	NA	NA
	Methyl tert-Butyl Ether (MTBE)	50,000	50,000	4,000 U	4,000 U	4,000 U	2,000 U	1,000 U	400 U	200 U	500 U	400 U	400 U	200 U	NA	4.0 U	2.0 U	2.0 U	2.0 U	NA	NA	2.0 U	NA	NA
	m+p Xylene	2	50,000	4,000 U	4,000 U	4,000 U	2,000 U	1,000 U	400 U	200 U	500 U	400 U	400 U	200 U	NA	4.0 U	2.0 U	2.0 U	2.0 U	NA	NA	2.0 U	NA	NA
	o-Xylene	2	50,000	2,000 U	2,000 U	2,000 U	1,000 U	500 U	200 U	100 U	250 U	200 U	200 U	100 U	NA	2.0 U	1.0 U	1.0 U	1.0 U	NA	NA	1.0 U	NA	NA
	cis-1,2-Dichloroethylene	20	50,000	**11,000**	**12,000**	**9,500**	**7,400**	**4,600**	**14,000**	**11,000**	**5,400**	**22,000**	**22,000**	**8,500**	NA	**120**	**35**	**30**	**1.8**	NA	NA	1.0 U	NA	NA
	Dibromomethane	NS	NS	4,000 U	4,000 U	4,000 U	2,000 U	1,000 U	400 U	200 U	500 U	400 U	400 U	200 U	NA	4.0 U	2.0 U	2.0 U	2.0 U	NA	NA	2.0 U	NA	NA
	1,2,3-Trichloropropane	NS	NS	4,000 U	4,000 U	4,000 U	2,000 U	1,000 U	400 U	200 U	500 U	400 U	400 U	200 U	NA	4.0 U	2.0 U	2.0 U	2.0 U	NA	NA	2.0 U	NA	NA
	Styrene	100	6,000	2,000 U	2,000 U	2,000 U	1,000 U	500 U	200 U	100 U	250 U	200 U	200 U	100 U	NA	2.0 U	1.0 U	1.0 U	1.0 U	NA	NA	1.0 U	NA	NA
	Dichlorodifluoromethane (Freon 12)	NS	NS	4,000 U	4,000 U	4,000 U	2,000 U	1,000 U	400 U	200 U	500 U	400 U	400 U	200 U	NA	4.0 U	2.0 U	2.0 U	2.0 U	NA	NA	2.0 U	NA	NA
	Acetone	50,000	50,000	10,000 U	10,000 U	10,000 U	5,000 U	2,500 U	1,000 U	500 U	1,200 U	1,000 U	1,000 U	500 U	NA	10 U	**77**	**24**	5.0 U	NA	NA	5.0 U	NA	NA
	Carbon Disulfide	NS	NS	4,000 U	4,000 U	4,000 U	2,000 U	1,000 U	400 U	200 U	500 U	400 U	400 U	200 U	NA	4.0 U	2.0 U	2.0 U	2.0 U	NA	NA	2.0 U	NA	NA
	2-Butanone (MEK)	50,000	50,000	10,000 U	10,000 U	10,000 U	5,000 U	2,500 U	1,000 U	500 U	1,200 U	1,000 U	1,000 U	500 U	NA	10 U	5.0 U	5.0 U	5.0 U	NA	NA	5.0 U	NA	NA
	4-Methyl-2-pentanone (MIBK)	50,000	50,000	10,000 U	10,000 U	10,000 U	5,000 U	2,500 U	1,000 U	500 U	1,200 U	1,000 U	1,000 U	500 U	NA	10 U	5.0 U	5.0 U	5.0 U	NA	NA	5.0 U	NA	NA
	2-Hexanone (MBK)	NS	NS	10,000 U	10,000 U	10,000 U	5,000 U	2,500 U	1,000 U	500 U	1,200 U	1,000 U	1,000 U	500 U	NA	10 U	5.0 U	5.0 U	5.0 U	NA	NA	5.0 U	NA	NA
	Bromochloromethane	NS	NS	4,000 U	4,000 U	4,000 U	2,000 U	1,000 U	400 U	200 U	500 U	400 U	400 U	200 U	NA	4.0 U	2.0 U	2.0 U	2.0 U	NA	NA	2.0 U	NA	NA
	Tetrahydrofuran	NS	NS	10,000 U	10,000 U	10,000 U	5,000 U	2,500 U	1,000 U	500 U	1,200 U	1,000 U	1,000 U	500 U	NA	10 U	5.0 U	5.0 U	2.0 U	NA	NA	2.0 U	NA	NA
	2,2-Dichloropropane	NS	NS	4,000 U	4,000 U	4,000 U	2,000 U	1,000 U	400 U	200 U	500 U	400 U	400 U	200 U	NA	4.0 U	2.0 U	2.0 U	2.0 U	NA	NA	2.0 U	NA	NA
	1,2-Dibromoethane (EDB)	2	50,000	4,000 U	4,000 U	4,000 U	2,000 U	1,000 U	400 U	200 U	500 U	400 U	400 U	200 U	NA	4.0 U	2.0 U	2.0 U	2.0 U	NA	NA	2.0 U	NA	NA
	1,3-Dichloropropane	NS	NS	4,000 U	4,000 U	4,000 U	2,000 U	1,000 U	400 U	200 U	500 U	400 U	400 U	200 U	NA	4.0 U	2.0 U	2.0 U	2.0 U	NA	NA	2.0 U	NA	NA
	1,1,1,2-Tetrachloroethane	10	50,000	2,000 U	2,000 U	2,000 U	1,000 U	500 U	200 U	100 U	250 U	200 U	200 U	100 U	NA	2.0 U	1.0 U	1.0 U	1.0 U	NA	NA	1.0 U	NA	NA
	Bromobenzene	NS	NS	4,000 U	4,000 U	4,000 U	2,000 U	1,000 U	400 U	200 U	500 U	400 U	400 U	200 U	NA	4.0 U	2.0 U	2.0 U	2.0 U	NA	NA	2.0 U	NA	NA
	n-Butylbenzene	4,000(1)	50,000(1)	4,000 U	4,000 U	4,000 U	2,000 U	1,000 U	400 U	200 U	500 U	400 U	400 U	200 U	NA	4.0 U	2.0 U	2.0 U	2.0 U	NA	NA	2.0 U	NA	NA
	sec-Butylbenzene	4,000(1)	50,000(1)	4,000 U	4,000 U	4,000 U	2,000 U	1,000 U	400 U	200 U	500 U	400 U	400 U	200 U	NA	4.0 U	2.0 U	2.0 U	2.0 U	NA	NA	2.0 U	NA	NA
	tert-Butylbenzene	4,000(1)	50,000(1)	4,000 U	4,000 U	4,000 U	2,000 U	1,000 U	400 U	200 U	500 U	400 U	400 U	200 U	NA	4.0 U	2.0 U	2.0 U	2.0 U	NA	NA	2.0 U	NA	NA
	2-Chlorotoluene	NS	NS	4,000 U	4,000 U	4,000 U	2,000 U	1,000 U	400 U	200 U	500 U	400 U	400 U	200 U	NA	4.0 U	2.0 U	2.0 U	2.0 U	NA	NA	2.0 U	NA	NA
	4-Chlorotoluene	NS	NS	4,000 U	4,000 U	4,000 U	2,000 U	1,000 U	400 U	200 U	500 U	400 U	400 U	200 U	NA	4.0 U	2.0 U	2.0 U	2.0 U	NA	NA	2.0 U	NA	NA
	1,2-Dibromo-3-chloropropane (DBCP)	NS	NS	4,000 U	4,000 U	4,000 U	2,000 U	1,000 U	400 U	200 U	500 U	400 U	400 U	200 U	NA	4.0 U	2.0 U	2.0 U	2.0 U	NA	NA	2.0 U	NA	NA
	Hexachlorobutadiene	50	3,000	1,200 U	1,200 U	1,200 U	600 U	300 U	120 U	60 U	150 U	120 U	120 U	60 U	NA	1.2 U	0.60 U	0.60 U	0.60 U	NA	NA	0.60 U	NA	NA
	Isopropylbenzene (Cumene)	4,000(1)	50,000(1)	4,000 U	4,000 U	4,000 U	2,000 U	1,000 U	400 U	200 U	500 U	400 U	400 U	200 U	NA	4.0 U	2.0 U	2.0 U	2.0 U	NA	NA	2.0 U	NA	NA
	p-Isopropyltoluene (p-Cymene)	4,000(1)	50,000(1)	4,000 U	4,000 U	4,000 U	2,000 U	1,000 U	400 U	200 U	500 U	400 U	400 U	200 U	NA	4.0 U	2.0 U	2.0 U	2.0 U	NA	NA	2.0 U	NA	NA
	Naphthalene	700	20,000	4,000 U	4,000 U	4,000 U	2,000 U	1,000 U	400 U	200 U	500 U	400 U	400 U	200 U	NA	4.0 U	2.0 U	2.0 U	2.0 U	NA	NA	2.0 U	NA	NA
	n-Propylbenzene	4,000(1)	50,000(1)	4,000 U	4,000 U	4,000 U	2,000 U	1,000 U	400 U	200 U	500 U	400 U	400 U	200 U	NA	4.0 U	2.0 U	2.0 U	2.0 U	NA	NA	2.0 U	NA	NA
	1,2,3-Trichlorobenzene	NS	NS	4,000 U	4,000 U	4,000 U	2,000 U	1,000 U	400 U	200 U	500 U	400 U	400 U	200 U	NA	4.0 U	**3.3**	**2.4**	2.0 U	NA	NA	2.0 U	NA	NA
	1,2,4-Trichlorobenzene	200	50,000	4,000 U	4,000 U	4,000 U	2,000 U	1,000 U	400 U	200 U	500 U	400 U	400 U	200 U	NA	**23**	**14**	**18**	**2.9**	NA	NA	**2.7**	NA	NA
	1,3,5-Trimethylbenzene	4,000(1)	50,000(1)	4,000 U	4,000 U	4,000 U	2,000 U	1,000 U	400 U	200 U	500 U	400 U	400 U	200 U	NA	4.0 U	2.0 U	2.0 U	2.0 U	NA	NA	2.0 U	NA	NA
	1,2,4-Trimethylbenzene	4,000(1)	50,000(1)	4,000 U	4,000 U	4,000 U	2,000 U	1,000 U	400 U	200 U	500 U	400 U	400 U	200 U	NA	4.0 U	2.0 U	2.0 U	2.0 U	NA	NA	2.0 U	NA	NA
	Diethyl Ether	NS	NS	4,000 U	4,000 U	4,000 U	2,000 U	1,000 U	400 U	200 U	500 U	400 U	400 U	200 U	NA	4.0 U	2.0 U	2.0 U	2.0 U	NA	NA	2.0 U	NA	NA
	Diisopropyl Ether (DIPE)	NS	NS	4,000 U	4,000 U	4,000 U	2,000 U	1,000 U	400 U	200 U	500 U	400 U	400 U	200 U	NA	4.0 U	2.0 U	2.0 U	2.0 U	NA	NA	2.0 U	NA	NA
	tert-Butyl Ethyl Ether (TBEE)	NS	NS	4,000 U	4,000 U	4,000 U	2,000 U	1,000 U	400 U	200 U	500 U	400 U	400 U	200 U	NA	4.0 U	2.0 U	2.0 U	2.0 U	NA	NA	2.0 U	NA	NA
	tert-Amyl Methyl Ether (TAME)	NS	NS	4,000 U	4,000 U	4,000 U	2,000 U	1,000 U	400 U	200 U	500 U	400 U	400 U	200 U	NA	4.0 U	2.0 U	2.0 U	2.0 U	NA	NA	2.0 U	NA	NA
	1,4-Dioxane	6,000	50,000	500,000 U	500,000 U	500,000 U	250,000 U	120,000 U	50,000 U	25,000 U	62,000 U	50,000 U	50,000 U	25,000 U	NA	500 U	250 U	250 U	250 U	NA	NA	250 U	NA	NA

Table 2
Summary of Analytical Results for Groundwater Samples -- 2008 through 2014
New Bedford High School
New Bedford, Massachusetts

Analysis	Analyte		Sample ID:	MW-27R																				
		Filter Size (micron)^:		N/A	N/A	N/A	N/A	N/A	N/A	N/A	N/A	N/A	N/A	N/A	N/A	N/A	N/A	N/A	N/A	0.45	0.20	N/A	0.45	0.20
		Sample Date:		3/8/2011	3/8/2011	3/25/2011	4/8/2011	4/29/2011	7/27/2011	7/27/2011	8/2/2011	8/25/2011	8/25/2011	2/27/2012	2/27/2012	9/18/2012	10/18/2012	12/14/2012	2/14/2014	2/14/2014	2/14/2014	2/21/2014	2/21/2014	2/21/2014
		GW-2	GW-3		Field Dup					Field Dup			Field Dup		Field Dup									
PAHs																								
(ug/L)	Acenaphthene	NS	10,000	NA	NA	NA	NA	NA	NA	NA	NA	NA	NA	NA	NA	NA	NA	NA	NA	NA	NA	NA	NA	NA
	Acenaphthylene	10,000	40	NA	NA	NA	NA	NA	NA	NA	NA	NA	NA	NA	NA	NA	NA	NA	NA	NA	NA	NA	NA	NA
	Anthracene	NS	30	NA	NA	NA	NA	NA	NA	NA	NA	NA	NA	NA	NA	NA	NA	NA	NA	NA	NA	NA	NA	NA
	Benzo(a)anthracene	NS	1,000	NA	NA	NA	NA	NA	NA	NA	NA	NA	NA	NA	NA	NA	NA	NA	NA	NA	NA	NA	NA	NA
	Benzo(a)pyrene	NS	500	NA	NA	NA	NA	NA	NA	NA	NA	NA	NA	NA	NA	NA	NA	NA	NA	NA	NA	NA	NA	NA
	Benzo(b)fluoranthene	NS	400	NA	NA	NA	NA	NA	NA	NA	NA	NA	NA	NA	NA	NA	NA	NA	NA	NA	NA	NA	NA	NA
	Benzo(g,h,i)perylene	NS	20	NA	NA	NA	NA	NA	NA	NA	NA	NA	NA	NA	NA	NA	NA	NA	NA	NA	NA	NA	NA	NA
	Benzo(k)fluoranthene	NS	100	NA	NA	NA	NA	NA	NA	NA	NA	NA	NA	NA	NA	NA	NA	NA	NA	NA	NA	NA	NA	NA
	Chrysene	NS	70	NA	NA	NA	NA	NA	NA	NA	NA	NA	NA	NA	NA	NA	NA	NA	NA	NA	NA	NA	NA	NA
	Dibenz(a,h)anthracene	NS	40	NA	NA	NA	NA	NA	NA	NA	NA	NA	NA	NA	NA	NA	NA	NA	NA	NA	NA	NA	NA	NA
	Fluoranthene	NS	200	NA	NA	NA	NA	NA	NA	NA	NA	NA	NA	NA	NA	NA	NA	NA	NA	NA	NA	NA	NA	NA
	Fluorene	NS	40	NA	NA	NA	NA	NA	NA	NA	NA	NA	NA	NA	NA	NA	NA	NA	NA	NA	NA	NA	NA	NA
	Indeno(1,2,3-cd)pyrene	NS	100	NA	NA	NA	NA	NA	NA	NA	NA	NA	NA	NA	NA	NA	NA	NA	NA	NA	NA	NA	NA	NA
	2-Methylnaphthalene	2,000	20,000	NA	NA	NA	NA	NA	NA	NA	NA	NA	NA	NA	NA	NA	NA	NA	NA	NA	NA	NA	NA	NA
	Naphthalene	700	20,000	NA	NA	NA	NA	NA	NA	NA	NA	NA	NA	NA	NA	NA	NA	NA	NA	NA	NA	NA	NA	NA
	Phenanthrene	NS	10,000	NA	NA	NA	NA	NA	NA	NA	NA	NA	NA	NA	NA	NA	NA	NA	NA	NA	NA	NA	NA	NA
	Pyrene	NS	20	NA	NA	NA	NA	NA	NA	NA	NA	NA	NA	NA	NA	NA	NA	NA	NA	NA	NA	NA	NA	NA
PCBs																								
(ug/L)	Aroclor 1016	5	10	NA	NA	NA	NA	NA	NA	NA	NA	2.50 U	3.00 U	3.5 U	3.54 U	5.0 U	5.0 U	50 U	0.500 U	0.250 U	0.250 U	0.250 U	0.250 U	0.250 U
	Aroclor 1221	5	10	NA	NA	NA	NA	NA	NA	NA	NA	2.50 U	3.00 U	3.5 U	3.54 U	5.0 U	5.0 U	50 U	0.500 U	0.250 U	0.250 U	0.250 U	0.250 U	0.250 U
	Aroclor 1232	5	10	NA	NA	NA	NA	NA	NA	NA	NA	2.50 U	3.00 U	3.5 U	3.54 U	5.0 U	5.0 U	50 U	0.500 U	0.250 U	0.250 U	0.250 U	0.250 U	0.250 U
	Aroclor 1242	5	10	NA	NA	NA	NA	NA	NA	NA	NA	**7.62**	**7.52**	3.5 U	3.54 U	5.0 U	5.0 U	50 U	0.500 U	0.250 U	0.250 U	0.250 U	0.250 U	0.250 U
	Aroclor 1248	5	10	NA	NA	NA	NA	NA	NA	NA	NA	2.50 U	3.00 U	**11.5**	**9.99**	5.0 U	5.0 U	50 U	0.500 U	0.250 U	0.250 U	0.250 U	0.250 U	0.250 U
	Aroclor 1254	5	10	NA	NA	NA	NA	NA	NA	NA	NA	**30.0**	**33.80**	**13.0**	**10.6**	**105**	**69.7**	**1,060**	**6.95**	0.250 U	0.250 U	**5.26**	0.250 U	0.250 U
	Aroclor 1260	5	10	NA	NA	NA	NA	NA	NA	NA	NA	2.50 U	3.00 U	3.5 U	3.54 U	5.0 U	5.0 U	50 U	0.500 U	0.250 U	0.250 U	0.250 U	0.250 U	0.250 U
	Aroclor 1262	5	10	NA	NA	NA	NA	NA	NA	NA	NA	NA	NA	NA	NA	5.0 U	5.0 U	50 U	0.500 U	0.250 U	0.250 U	0.250 U	0.250 U	0.250 U
	Aroclor 1268	5	10	NA	NA	NA	NA	NA	NA	NA	NA	NA	NA	NA	NA	5.0 U	5.0 U	50 U	0.500 U	0.250 U	0.250 U	0.250 U	0.250 U	0.250 U
	Total PCBs	5	10	NA	NA	NA	NA	NA	NA	NA	NA	**37.62**	**41.32**	**24.5**	**20.59**	**105**	**69.7**	**1,060**	**6.95**	0.250 U	0.250 U	**5.26**	0.250 U	0.250 U
Total Petroleum Hydrocarbons																								
(ug/L)	Total Petroleum Hydrocarbons (C9-C44	5,000	5,000	NA	NA	NA	NA	NA	NA	NA	NA	NA	NA	NA	NA	NA	NA	NA	NA	NA	NA	NA	NA	NA
Metals, total																								
(ug/L)	Antimony	NS	8,000	NA	NA	NA	NA	NA	NA	NA	NA	NA	NA	NA	NA	NA	NA	NA	NA	NA	NA	NA	NA	NA
	Arsenic	NS	900	NA	NA	NA	NA	NA	NA	NA	NA	NA	NA	NA	NA	NA	NA	NA	NA	NA	NA	NA	NA	NA
	Barium	NS	50,000	NA	NA	NA	NA	NA	NA	NA	NA	NA	NA	NA	NA	NA	NA	NA	NA	NA	NA	NA	NA	NA
	Beryllium	NS	200	NA	NA	NA	NA	NA	NA	NA	NA	NA	NA	NA	NA	NA	NA	NA	NA	NA	NA	NA	NA	NA
	Cadmium	NS	4	NA	NA	NA	NA	NA	NA	NA	NA	NA	NA	NA	NA	NA	NA	NA	NA	NA	NA	NA	NA	NA
	Chromium	NS	300	NA	NA	NA	NA	NA	NA	NA	NA	NA	NA	NA	NA	NA	NA	NA	NA	NA	NA	NA	NA	NA
	Lead	NS	10	NA	NA	NA	NA	NA	NA	NA	NA	NA	NA	NA	NA	NA	NA	NA	NA	NA	NA	NA	NA	NA
	Mercury	NS	20	NA	NA	NA	NA	NA	NA	NA	NA	NA	NA	NA	NA	NA	NA	NA	NA	NA	NA	NA	NA	NA
	Nickel	NS	200	NA	NA	NA	NA	NA	NA	NA	NA	NA	NA	NA	NA	NA	NA	NA	NA	NA	NA	NA	NA	NA
	Selenium	NS	100	NA	NA	NA	NA	NA	NA	NA	NA	NA	NA	NA	NA	NA	NA	NA	NA	NA	NA	NA	NA	NA
	Silver	NS	7	NA	NA	NA	NA	NA	NA	NA	NA	NA	NA	NA	NA	NA	NA	NA	NA	NA	NA	NA	NA	NA
	Thallium	NS	3,000	NA	NA	NA	NA	NA	NA	NA	NA	NA	NA	NA	NA	NA	NA	NA	NA	NA	NA	NA	NA	NA
	Vanadium	NS	4,000	NA	NA	NA	NA	NA	NA	NA	NA	NA	NA	NA	NA	NA	NA	NA	NA	NA	NA	NA	NA	NA
	Zinc	NS	900	NA	NA	NA	NA	NA	NA	NA	NA	NA	NA	NA	NA	NA	NA	NA	NA	NA	NA	NA	NA	NA
Metals, dissolved																								
(ug/L)	Antimony	NS	8,000	NA	NA	NA	NA	NA	NA	NA	NA	NA	NA	NA	NA	NA	NA	NA	NA	NA	NA	NA	NA	NA
	Arsenic	NS	900	NA	NA	NA	NA	NA	NA	NA	NA	NA	NA	NA	NA	NA	NA	NA	NA	NA	NA	NA	NA	NA
	Barium	NS	50,000	NA	NA	NA	NA	NA	NA	NA	NA	NA	NA	NA	NA	NA	NA	NA	NA	NA	NA	NA	NA	NA
	Beryllium	NS	200	NA	NA	NA	NA	NA	NA	NA	NA	NA	NA	NA	NA	NA	NA	NA	NA	NA	NA	NA	NA	NA
	Cadmium	NS	4	NA	NA	NA	NA	NA	NA	NA	NA	NA	NA	NA	NA	NA	NA	NA	NA	NA	NA	NA	NA	NA
	Chromium	NS	300	NA	NA	NA	NA	NA	NA	NA	NA	NA	NA	NA	NA	NA	NA	NA	NA	NA	NA	NA	NA	NA
	Lead	NS	10	NA	NA	NA	NA	NA	NA	NA	NA	NA	NA	NA	NA	NA	NA	NA	NA	NA	NA	NA	NA	NA
	Mercury	NS	20	NA	NA	NA	NA	NA	NA	NA	NA	NA	NA	NA	NA	NA	NA	NA	NA	NA	NA	NA	NA	NA
	Nickel	NS	200	NA	NA	NA	NA	NA	NA	NA	NA	NA	NA	NA	NA	NA	NA	NA	NA	NA	NA	NA	NA	NA
	Selenium	NS	100	NA	NA	NA	NA	NA	NA	NA	NA	NA	NA	NA	NA	NA	NA	NA	NA	NA	NA	NA	NA	NA
	Silver	NS	7	NA	NA	NA	NA	NA	NA	NA	NA	NA	NA	NA	NA	NA	NA	NA	NA	NA	NA	NA	NA	NA
	Thallium	NS	3,000	NA	NA	NA	NA	NA	NA	NA	NA	NA	NA	NA	NA	NA	NA	NA	NA	NA	NA	NA	NA	NA
	Vanadium	NS	4,000	NA	NA	NA	NA	NA	NA	NA	NA	NA	NA	NA	NA	NA	NA	NA	NA	NA	NA	NA	NA	NA
	Zinc	NS	900	NA	NA	NA	NA	NA	NA	NA	NA	NA	NA	NA	NA	NA	NA	NA	NA	NA	NA	NA	NA	NA
General Chemistry																								
(ug/L)	Nitrogen, Nitrate	NS	NS	NA	NA	NA	NA	NA	NA	NA	NA	NA	NA	NA	NA	NA	NA	NA	NA	NA	NA	NA	NA	NA
	Sulfate	NS	NS	NA	NA	NA	NA	NA	NA	NA	NA	NA	NA	NA	NA	NA	NA	NA	NA	NA	NA	NA	NA	NA
	Total Organic Carbon	NS	NS	NA	NA	NA	NA	NA	NA	NA	NA	NA	NA	NA	NA	NA	NA	NA	NA	NA	NA	NA	NA	NA

Notes:
ug/L - micrograms per liter.
B - Compound detected in associated method blank
J - Estimated value.
NA - Sample not analyzed for the listed analyte.
N/A - Not applicable.
NS - No MassDEP standards exist for this compound.
U - Compound was not detected at specified quantitation limit.
Values in **Bold** indicate the compound was detected.
VOCs - Volatile Organic Compounds.
PAHs - Polynuclear Aromatic Hydrocarbons.
PCBs - Polychlorinated Biphenyls.
(1) - MassDEP Method 1 standards for C9-C10 aromatic hydrocarbons used.
(2) - MassDEP Method 1 standards for 1,3-Dichloropropene used.
^ - 0.45 micron filtration done in field; 0.20 and 2.0 micron filtration performed in lab.
* - Sample collected on 4/10/2012 for PCB analysis was broken and was recollected on 4/18/2012
** - Lab filtered sample using a 2.0 micron filter and then filtered a second time using a 0.20 micr

Table 2
Summary of Analytical Results for Groundwater Samples -- 2008 through 2014
New Bedford High School
New Bedford, Massachusetts

Analysis	Analyte		Sample ID:	MW-28																					MW-29		MW-30
			Filter Size (micron)^:	N/A	N/A	N/A	N/A	N/A	N/A	N/A	N/A	N/A	N/A	N/A	N/A	N/A	N/A	2.0	2.0	0.45	0.45	0.20	N/A	0.45	N/A	N/A	N/A
			Sample Date:	9/9/2010	10/21/2010	3/8/2011	3/25/2011	4/11/2011	4/28/2011	7/27/2011	8/2/2011	8/25/2011	2/27/2012	4/11/2012	12/13/2012	1/16/2014	1/16/2014	1/16/2014	1/16/2014	1/16/2014	1/16/2014	1/16/2014	2/21/2014	2/21/2014	9/10/2010	4/10/2012	10/22/2010
		GW-2	GW-3													Field Dup		Field Dup		Field Dup	**						
VOCs																											
(ug/L)	Methylene Chloride	2,000	50,000	2.0 U	2.0 U	2.0 U	5.0 U	2.0 U	10 U	2.0 U	5.0 U	2.0 U	2.0 U	10 U	2.0 U	2.0 U	2.0 U	NA	NA	NA	NA	NA	2.0 U	NA	2.0 U	2.0 U	2.0 U
	1,1-Dichloroethane	2,000	20,000	1.0 U	1.0 U	1.0 U	2.5 U	1.0 U	5.0 U	1.0 U	2.5 U	1.0 U	1.0 U	5.0 U	1.0 U	1.0 U	1.0 U	NA	NA	NA	NA	NA	1.0 U	NA	1.0 U	1.0 U	1.0 U
	Chloroform	50	20,000	1.0 U	1.0 U	1.0 U	2.5 U	1.0 U	5.0 U	1.0 U	2.5 U	1.0 U	1.0 U	5.0 U	1.0 U	1.0 U	1.0 U	NA	NA	NA	NA	NA	1.0 U	NA	1.0 U	1.0 U	1.0 U
	Carbon Tetrachloride	2	5,000	1.0 U	1.0 U	1.0 U	2.5 U	1.0 U	5.0 U	1.0 U	2.5 U	1.0 U	1.0 U	5.0 U	1.0 U	1.0 U	1.0 U	NA	NA	NA	NA	NA	1.0 U	NA	1.0 U	1.0 U	1.0 U
	1,2-Dichloropropane	3	50,000	1.0 U	1.0 U	1.0 U	2.5 U	1.0 U	5.0 U	1.0 U	2.5 U	1.0 U	1.0 U	5.0 U	1.0 U	1.0 U	1.0 U	NA	NA	NA	NA	NA	1.0 U	NA	1.0 U	1.0 U	1.0 U
	Chlorodibromomethane	20	50,000	1.0 U	1.0 U	1.0 U	2.5 U	1.0 U	5.0 U	1.0 U	2.5 U	1.0 U	1.0 U	5.0 U	1.0 U	1.0 U	1.0 U	NA	NA	NA	NA	NA	1.0 U	NA	1.0 U	1.0 U	1.0 U
	1,1,2-Trichloroethane	900	50,000	1.0 U	1.0 U	1.0 U	2.5 U	1.0 U	5.0 U	1.0 U	2.5 U	1.0 U	1.0 U	5.0 U	1.0 U	1.0 U	1.0 U	NA	NA	NA	NA	NA	1.0 U	NA	1.0 U	1.0 U	1.0 U
	Tetrachloroethylene	50	30,000	1.0 U	1.0 U	1.0 U	2.5 U	1.0 U	5.0 U	1.0 U	2.5 U	1.0 U	1.0 U	5.0 U	1.0 U	1.0 U	1.0 U	NA	NA	NA	NA	NA	1.0 U	NA	1.0 U	1.0 U	1.0 U
	Chlorobenzene	200	1,000	**38**	**8.5**	1.0 U	2.5 U	1.0 U	5.0 U	**28**	**39**	**35**	**4.2**	**11**	1.0 U	1.0 U	1.0 U	NA	NA	NA	NA	NA	1.0 U	NA	1.0 U	1.0 U	1.0 U
	Trichlorofluoromethane (Freon 11)	NS	NS	2.0 U	2.0 U	2.0 U	5.0 U	2.0 U	10 U	2.0 U	5.0 U	2.0 U	2.0 U	10 U	2.0 U	2.0 U	2.0 U	NA	NA	NA	NA	NA	2.0 U	NA	2.0 U	2.0 U	2.0 U
	1,2-Dichloroethane	5	20,000	1.0 U	1.0 U	1.0 U	2.5 U	1.0 U	5.0 U	1.0 U	2.5 U	1.0 U	1.0 U	5.0 U	1.0 U	1.0 U	1.0 U	NA	NA	NA	NA	NA	1.0 U	NA	1.0 U	1.0 U	1.0 U
	1,1,1-Trichloroethane	4,000	20,000	1.0 U	1.0 U	1.0 U	2.5 U	1.0 U	5.0 U	1.0 U	2.5 U	1.0 U	1.0 U	5.0 U	1.0 U	1.0 U	1.0 U	NA	NA	NA	NA	NA	1.0 U	NA	1.0 U	1.0 U	1.0 U
	Bromodichloromethane	6	50,000	1.0 U	1.0 U	1.0 U	2.5 U	1.0 U	5.0 U	1.0 U	2.5 U	1.0 U	1.0 U	5.0 U	1.0 U	1.0 U	1.0 U	NA	NA	NA	NA	NA	1.0 U	NA	1.0 U	1.0 U	1.0 U
	trans-1,3-Dichloropropene	10(2)	200(2)	0.50 U	0.50 U	0.50 U	1.2 U	0.50 U	2.5 U	0.50 U	1.2 U	0.50 U	0.50 U	2.5 U	0.50 U	0.50 U	0.50 U	NA	NA	NA	NA	NA	0.50 U	NA	0.50 U	0.50 U	0.50 U
	cis-1,3-Dichloropropene	10(2)	200(2)	0.50 U	0.50 U	0.50 U	1.2 U	0.50 U	2.5 U	0.50 U	1.2 U	0.50 U	0.50 U	2.5 U	0.50 U	0.50 U	0.50 U	NA	NA	NA	NA	NA	0.50 U	NA	0.50 U	0.50 U	0.50 U
	1,1-Dichloropropene	NS	NS	2.0 U	2.0 U	2.0 U	5.0 U	2.0 U	10 U	2.0 U	5.0 U	2.0 U	2.0 U	10 U	2.0 U	2.0 U	2.0 U	NA	NA	NA	NA	NA	2.0 U	NA	2.0 U	2.0 U	2.0 U
	Bromoform	700	50,000	2.0 U	2.0 U	2.0 U	5.0 U	2.0 U	10 U	2.0 U	5.0 U	2.0 U	2.0 U	10 U	2.0 U	2.0 U	2.0 U	NA	NA	NA	NA	NA	2.0 U	NA	2.0 U	2.0 U	2.0 U
	1,1,2,2-Tetrachloroethane	9	50,000	1.0 U	1.0 U	1.0 U	2.5 U	1.0 U	5.0 U	1.0 U	2.5 U	1.0 U	1.0 U	5.0 U	1.0 U	1.0 U	1.0 U	NA	NA	NA	NA	NA	1.0 U	NA	1.0 U	1.0 U	1.0 U
	Benzene	1,000	10,000	1.0 U	1.0 U	1.0 U	2.5 U	1.0 U	5.0 U	**0.56**	1.2 U	**0.65**	0.5 U	2.5 U	0.50 U	0.50 U	0.50 U	NA	NA	NA	NA	NA	0.50 U	NA	1.0 U	0.50 U	1.0 U
	Toluene	50,000	40,000	1.0 U	1.0 U	1.0 U	2.5 U	1.0 U	5.0 U	1.0 U	2.5 U	1.0 U	1.0 U	5.0 U	1.0 U	1.0 U	1.0 U	NA	NA	NA	NA	NA	1.0 U	NA	1.0 U	1.0 U	1.0 U
	Ethylbenzene	20,000	5,000	1.0 U	1.0 U	1.0 U	2.5 U	1.0 U	5.0 U	1.0 U	2.5 U	1.0 U	1.0 U	5.0 U	1.0 U	1.0 U	1.0 U	NA	NA	NA	NA	NA	1.0 U	NA	1.0 U	1.0 U	1.0 U
	Chloromethane	NS	NS	2.0 U	2.0 U	2.0 U	5.0 U	2.0 U	10 U	2.0 U	5.0 U	2.0 U	2.0 U	10 U	2.0 U	2.0 U	2.0 U	NA	NA	NA	NA	NA	2.0 U	NA	2.0 U	2.0 U	2.0 U
	Bromomethane	7	800	2.0 U	2.0 U	2.0 U	5.0 U	2.0 U	10 U	2.0 U	5.0 U	2.0 U	2.0 U	10 U	2.0 U	2.0 U	2.0 U	NA	NA	NA	NA	NA	2.0 U	NA	2.0 U	2.0 U	2.0 U
	Vinyl Chloride	2	50,000	**9.7**	**3.8**	**10**	**22**	**23**	**7.4**	**36**	**42**	**55**	**90**	**130**	**6.5**	1.0 U	1.0 U	NA	NA	NA	NA	NA	1.0 U	NA	1.0 U	1.0 U	1.0 U
	Chloroethane	NS	NS	2.0 U	2.0 U	2.0 U	5.0 U	2.0 U	10 U	2.0 U	5.0 U	2.0 U	2.0 U	10 U	2.0 U	2.0 U	2.0 U	NA	NA	NA	NA	NA	2.0 U	NA	2.0 U	2.0 U	2.0 U
	1,1-Dichloroethylene	80	30,000	1.0 U	1.0 U	1.0 U	2.5 U	1.0 U	5.0 U	1.0 U	2.5 U	1.0 U	**2.7**	5.0 U	1.0 U	1.0 U	1.0 U	NA	NA	NA	NA	NA	1.0 U	NA	1.0 U	1.0 U	1.0 U
	trans-1,2-Dichloroethylene	80	50,000	**9.2**	**2.9**	**15**	**40**	**36**	**12**	**51**	**42**	**51**	**100**	**95**	**7.2**	1.0 U	1.0 U	NA	NA	NA	NA	NA	1.0 U	NA	1.0 U	1.0 U	1.0 U
	Trichloroethylene	5	5,000	**11**	**5.0**	**110**	**220**	**200**	**150**	**87**	**52**	**78**	**190**	**180**	**43**	**24**	**24**	NA	NA	NA	NA	NA	**21**	NA	**1.2**	1.0 U	1.0 U
	1,2-Dichlorobenzene	8,000	2,000	**2.0**	1.0 U	1.0 U	2.5 U	1.0 U	5.0 U	1.0 U	2.5 U	**1.2**	1.0 U	5.0 U	1.0 U	1.0 U	1.0 U	NA	NA	NA	NA	NA	1.0 U	NA	1.0 U	1.0 U	1.0 U
	1,3-Dichlorobenzene	6,000	50,000	**9.9**	**2.5**	1.0 U	**0.84 J**	1.0 U	5.0 U	**3.8**	**6.0**	**6.2**	**1.0**	5.0 U	**1.3**	1.0 U	1.0 U	NA	NA	NA	NA	NA	1.0 U	NA	1.0 U	1.0 U	1.0 U
	1,4-Dichlorobenzene	60	8,000	**48**	**11**	**2.7**	**3.4**	**3.8**	5.0 U	**12**	**23**	**25**	**3.5**	**9.3**	**5.5**	**3.0**	**3.0**	NA	NA	NA	NA	NA	**2.8**	NA	1.0 U	1.0 U	1.0 U
	Methyl tert-Butyl Ether (MTBE)	50,000	50,000	2.0 U	2.0 U	2.0 U	5.0 U	2.0 U	10 U	2.0 U	5.0 U	2.0 U	2.0 U	10 U	2.0 U	2.0 U	2.0 U	NA	NA	NA	NA	NA	2.0 U	NA	2.0 U	2.0 U	2.0 U
	m+p Xylene	2	50,000	2.0 U	2.0 U	2.0 U	5.0 U	2.0 U	10 U	2.0 U	5.0 U	2.0 U	2.0 U	10 U	2.0 U	2.0 U	2.0 U	NA	NA	NA	NA	NA	2.0 U	NA	2.0 U	2.0 U	2.0 U
	o-Xylene	2	50,000	1.0 U	1.0 U	1.0 U	2.5 U	1.0 U	5.0 U	1.0 U	2.5 U	1.0 U	1.0 U	5.0 U	1.0 U	1.0 U	1.0 U	NA	NA	NA	NA	NA	1.0 U	NA	1.0 U	1.0 U	1.0 U
	cis-1,2-Dichloroethylene	20	50,000	**25**	**11**	**70**	**180**	**170**	**56**	**170**	**140**	**200**	**680**	**660**	**52**	**3.2**	**3.1**	NA	NA	NA	NA	NA	**2.6**	NA	1.0 U	1.0 U	1.0 U
	Dibromomethane	NS	NS	2.0 U	2.0 U	2.0 U	5.0 U	2.0 U	10 U	2.0 U	5.0 U	2.0 U	2.0 U	10 U	2.0 U	2.0 U	2.0 U	NA	NA	NA	NA	NA	2.0 U	NA	2.0 U	2.0 U	2.0 U
	1,2,3-Trichloropropane	NS	NS	2.0 U	2.0 U	2.0 U	5.0 U	2.0 U	10 U	2.0 U	5.0 U	2.0 U	2.0 U	10 U	2.0 U	2.0 U	2.0 U	NA	NA	NA	NA	NA	2.0 U	NA	2.0 U	2.0 U	2.0 U
	Styrene	100	6,000	1.0 U	1.0 U	1.0 U	2.5 U	1.0 U	5.0 U	1.0 U	2.5 U	1.0 U	1.0 U	5.0 U	1.0 U	1.0 U	1.0 U	NA	NA	NA	NA	NA	1.0 U	NA	1.0 U	1.0 U	1.0 U
	Dichlorodifluoromethane (Freon 12)	NS	NS	2.0 U	2.0 U	2.0 U	5.0 U	2.0 U	10 U	2.0 U	5.0 U	2.0 U	2.0 U	10 U	2.0 U	2.0 U	2.0 U	NA	NA	NA	NA	NA	2.0 U	NA	2.0 U	2.0 U	2.0 U
	Acetone	50,000	50,000	5.0 U	5.0 U	5.0 U	12 U	5.0 U	25 U	5.0 U	12 U	5.0 U	5.0 U	25 U	5.0 U	5.0 U	5.0 U	NA	NA	NA	NA	NA	5.0 U	NA	5.0 U	5.0 U	5.0 U
	Carbon Disulfide	NS	NS	2.0 U	2.0 U	2.0 U	5.0 U	2.0 U	10 U	2.0 U	5.0 U	2.0 U	2.0 U	10 U	2.0 U	2.0 U	2.0 U	NA	NA	NA	NA	NA	2.0 U	NA	2.0 U	2.0 U	2.0 U
	2-Butanone (MEK)	50,000	50,000	5.0 U	5.0 U	5.0 U	12 U	5.0 U	25 U	5.0 U	12 U	5.0 U	5.0 U	25 U	5.0 U	5.0 U	5.0 U	NA	NA	NA	NA	NA	5.0 U	NA	5.0 U	5.0 U	5.0 U
	4-Methyl-2-pentanone (MIBK)	50,000	50,000	5.0 U	5.0 U	5.0 U	12 U	5.0 U	25 U	5.0 U	12 U	5.0 U	5.0 U	25 U	5.0 U	5.0 U	5.0 U	NA	NA	NA	NA	NA	5.0 U	NA	5.0 U	5.0 U	5.0 U
	2-Hexanone (MBK)	NS	NS	5.0 U	5.0 U	5.0 U	12 U	5.0 U	25 U	5.0 U	12 U	5.0 U	5.0 U	25 U	5.0 U	5.0 U	5.0 U	NA	NA	NA	NA	NA	5.0 U	NA	5.0 U	5.0 U	5.0 U
	Bromochloromethane	NS	NS	2.0 U	2.0 U	2.0 U	5.0 U	2.0 U	10 U	2.0 U	5.0 U	2.0 U	2.0 U	10 U	2.0 U	2.0 U	2.0 U	NA	NA	NA	NA	NA	2.0 U	NA	2.0 U	2.0 U	2.0 U
	Tetrahydrofuran	NS	NS	10 U	10 U	5.0 U	12 U	5.0 U	25 U	5.0 U	12 U	5.0 U	5.0 U	25 U	5.0 U	2.0 U	2.0 U	NA	NA	NA	NA	NA	2.0 U	NA	10 U	5.0 U	10 U
	2,2-Dichloropropane	NS	NS	2.0 U	2.0 U	2.0 U	5.0 U	2.0 U	10 U	2.0 U	5.0 U	2.0 U	2.0 U	10 U	2.0 U	2.0 U	2.0 U	NA	NA	NA	NA	NA	2.0 U	NA	2.0 U	2.0 U	2.0 U
	1,2-Dibromoethane (EDB)	2	50,000	2.0 U	2.0 U	2.0 U	5.0 U	2.0 U	10 U	2.0 U	5.0 U	2.0 U	2.0 U	10 U	2.0 U	2.0 U	2.0 U	NA	NA	NA	NA	NA	2.0 U	NA	2.0 U	2.0 U	2.0 U
	1,3-Dichloropropane	NS	NS	2.0 U	2.0 U	2.0 U	5.0 U	2.0 U	10 U	2.0 U	5.0 U	2.0 U	2.0 U	10 U	2.0 U	2.0 U	2.0 U	NA	NA	NA	NA	NA	2.0 U	NA	2.0 U	2.0 U	2.0 U
	1,1,1,2-Tetrachloroethane	10	50,000	1.0 U	1.0 U	1.0 U	2.5 U	1.0 U	5.0 U	1.0 U	2.5 U	1.0 U	1.0 U	5.0 U	1.0 U	1.0 U	1.0 U	NA	NA	NA	NA	NA	1.0 U	NA	1.0 U	1.0 U	1.0 U
	Bromobenzene	NS	NS	2.0 U	2.0 U	2.0 U	5.0 U	2.0 U	10 U	2.0 U	5.0 U	2.0 U	2.0 U	10 U	2.0 U	2.0 U	2.0 U	NA	NA	NA	NA	NA	2.0 U	NA	2.0 U	2.0 U	2.0 U
	n-Butylbenzene	4,000(3)	50,000(3)	2.0 U	2.0 U	2.0 U	5.0 U	2.0 U	10 U	2.0 U	5.0 U	2.0 U	2.0 U	10 U	2.0 U	2.0 U	2.0 U	NA	NA	NA	NA	NA	2.0 U	NA	2.0 U	2.0 U	2.0 U
	sec-Butylbenzene	4,000(3)	50,000(3)	2.0 U	2.0 U	2.0 U	5.0 U	2.0 U	10 U	2.0 U	5.0 U	2.0 U	2.0 U	10 U	2.0 U	2.0 U	2.0 U	NA	NA	NA	NA	NA	2.0 U	NA	2.0 U	2.0 U	2.0 U
	tert-Butylbenzene	4,000(3)	50,000(3)	2.0 U	2.0 U	2.0 U	5.0 U	2.0 U	10 U	2.0 U	5.0 U	2.0 U	2.0 U	10 U	2.0 U	2.0 U	2.0 U	NA	NA	NA	NA	NA	2.0 U	NA	2.0 U	2.0 U	2.0 U
	2-Chlorotoluene	NS	NS	2.0 U	2.0 U	2.0 U	5.0 U	2.0 U	10 U	2.0 U	5.0 U	2.0 U	2.0 U	10 U	2.0 U	2.0 U	2.0 U	NA	NA	NA	NA	NA	2.0 U	NA	2.0 U	2.0 U	2.0 U
	4-Chlorotoluene	NS	NS	2.0 U	2.0 U	2.0 U	5.0 U	2.0 U	10 U	2.0 U	5.0 U	2.0 U	2.0 U	10 U	2.0 U	2.0 U	2.0 U	NA	NA	NA	NA	NA	2.0 U	NA	2.0 U	2.0 U	2.0 U
	1,2-Dibromo-3-chloropropane (DBCP)	NS	NS	2.0 U	2.0 U	2.0 U	5.0 U	2.0 U	10 U	2.0 U	5.0 U	2.0 U	2.0 U	10 U	2.0 U	2.0 U	2.0 U	NA	NA	NA	NA	NA	2.0 U	NA	2.0 U	2.0 U	2.0 U
	Hexachlorobutadiene	50	3,000	0.60 U	0.60 U	0.60 U	1.5 U	0.60 U	3.0 U	0.60 U	1.5 U	0.60 U	0.60 U	3.0 U	0.60 U	0.60 U	0.60 U	NA	NA	NA	NA	NA	0.60 U	NA	0.60 U	0.60 U	0.60 U
	Isopropylbenzene (Cumene)	4,000(3)	50,000(3)	2.0 U	2.0 U	2.0 U	5.0 U	2.0 U	10 U	2.0 U	5.0 U	2.0 U	2.0 U	10 U	2.0 U	2.0 U	2.0 U	NA	NA	NA	NA	NA	2.0 U	NA	2.0 U	2.0 U	2.0 U
	p-Isopropyltoluene (p-Cymene)	4,000(3)	50,000(3)	2.0 U	2.0 U	2.0 U	5.0 U	2.0 U	10 U	2.0 U	5.0 U	2.0 U	2.0 U	10 U	2.0 U	2.0 U	2.0 U	NA	NA	NA	NA	NA	2.0 U	NA	2.0 U	2.0 U	2.0 U
	Naphthalene	700	20,000	5.0 U	2.0 U	2.0 U	5.0 U	2.0 U	10 U	2.0 U	5.0 U	2.0 U	2.0 U	10 U	2.0 U	2.0 U	2.0 U	NA	NA	NA	NA	NA	2.0 U	NA	5.0 U	2.0 U	2.0 U
	n-Propylbenzene	4,000(3)	50,000(3)	2.0 U	2.0 U	2.0 U	5.0 U	2.0 U	10 U	2.0 U	5.0 U	2.0 U	2.0 U	10 U	2.0 U	2.0 U	2.0 U	NA	NA	NA	NA	NA	2.0 U	NA	2.0 U	2.0 U	2.0 U
	1,2,3-Trichlorobenzene	NS	NS	2.0 U	2.0 U	2.0 U	5.0 U	2.0 U	10 U	2.0 U	5.0 U	2.0 U	2.0 U	10 U	2.0 U	2.0 U	2.0 U	NA	NA	NA	NA	NA	2.0 U	NA	2.0 U	2.0 U	2.0 U
	1,2,4-Trichlorobenzene	200	50,000	2.0 U	2.0 U	2.0 U	**1.3 J**	2.0 U	10 U	2.0 U	5.0 U	2.0 U	2.0 U	10 U	**2.4**	2.0 U	2.0 U	NA	NA	NA	NA	NA	2.0 U	NA	2.0 U	2.0 U	2.0 U
	1,3,5-Trimethylbenzene	4,000(3)	50,000(3)	2.0 U	2.0 U	2.0 U	5.0 U	2.0 U	10 U	2.0 U	5.0 U	2.0 U	2.0 U	10 U	2.0 U	2.0 U	2.0 U	NA	NA	NA	NA	NA	2.0 U	NA	2.0 U	2.0 U	2.0 U
	1,2,4-Trimethylbenzene	4,000(3)	50,000(3)	2.0 U	2.0 U	2.0 U	5.0 U	2.0 U	10 U	2.0 U	5.0 U	2.0 U	2.0 U	10 U	2.0 U	2.0 U	2.0 U	NA	NA	NA	NA	NA	2.0 U	NA	2.0 U	2.0 U	2.0 U
	Diethyl Ether	NS	NS	2.0 U	2.0 U	2.0 U	5.0 U	2.0 U	10 U	2.0 U	5.0 U	2.0 U	2.0 U	10 U	2.0 U	2.0 U	2.0 U	NA	NA	NA	NA	NA	2.0 U	NA	2.0 U	2.0 U	2.0 U
	Diisopropyl Ether (DIPE)	NS	NS	2.0 U	2.0 U	2.0 U	5.0 U	2.0 U	10 U	2.0 U	5.0 U	2.0 U	2.0 U	10 U	2.0 U	2.0 U	2.0 U	NA	NA	NA	NA	NA	2.0 U	NA	2.0 U	2.0 U	2.0 U
	tert-Butyl Ethyl Ether (TBEE)	NS	NS	2.0 U	2.0 U	2.0 U	5.0 U	2.0 U	10 U	2.0 U	5.0 U	2.0 U	2.0 U	10 U	2.0 U	2.0 U	2.0 U	NA	NA	NA	NA	NA	2.0 U	NA	2.0 U	2.0 U	2.0 U
	tert-Amyl Methyl Ether (TAME)	NS	NS	2.0 U	2.0 U	2.0 U	5.0 U	2.0 U	10 U	2.0 U	5.0 U	2.0 U	2.0 U	10 U	2.0 U	2.0 U	2.0 U	NA	NA	NA	NA	NA	2.0 U	NA	2.0 U	2.0 U	2.0 U
	1,4-Dioxane	6,000	50,000	250 U	250 U	250 U	620 U	250 U	1,200 U	250 U	620 U	250 U	250 U	1,200 U	250 U	250 U	250 U	NA	NA	NA	NA	NA	250 U	NA	250 U	250 U	250 U

Table 2
Summary of Analytical Results for Groundwater Samples -- 2008 through 2014
New Bedford High School
New Bedford, Massachusetts

Analysis	Analyte	Sample ID:		MW-28																					MW-29		MW-30
		Filter Size (micron)^:		N/A	N/A	N/A	N/A	N/A	N/A	N/A	N/A	N/A	N/A	N/A	N/A	N/A	N/A	2.0	2.0	0.45	0.45	0.20	N/A	0.45	N/A	N/A	N/A
		Sample Date:		9/9/2010	10/21/2010	3/8/2011	3/25/2011	4/11/2011	4/28/2011	7/27/2011	8/2/2011	8/25/2011	2/27/2012	4/11/2012	12/13/2012	1/16/2014	1/16/2014	1/16/2014	1/16/2014	1/16/2014	1/16/2014	**	2/21/2014	2/21/2014	9/10/2010	4/10/2012	10/22/2010
		GW-2	GW-3														Field Dup		Field Dup		Field Dup						
PAHs																											
(ug/L)	Acenaphthene	NS	10,000	NA	NA	NA	NA	NA	NA	NA	NA	NA	NA	NA	NA	NA	NA	NA	NA	NA	NA	NA	NA	NA	NA	NA	NA
	Acenaphthylene	10,000	40	NA	NA	NA	NA	NA	NA	NA	NA	NA	NA	NA	NA	NA	NA	NA	NA	NA	NA	NA	NA	NA	NA	NA	NA
	Anthracene	NS	30	NA	NA	NA	NA	NA	NA	NA	NA	NA	NA	NA	NA	NA	NA	NA	NA	NA	NA	NA	NA	NA	NA	NA	NA
	Benzo(a)anthracene	NS	1,000	NA	NA	NA	NA	NA	NA	NA	NA	NA	NA	NA	NA	NA	NA	NA	NA	NA	NA	NA	NA	NA	NA	NA	NA
	Benzo(a)pyrene	NS	500	NA	NA	NA	NA	NA	NA	NA	NA	NA	NA	NA	NA	NA	NA	NA	NA	NA	NA	NA	NA	NA	NA	NA	NA
	Benzo(b)fluoranthene	NS	400	NA	NA	NA	NA	NA	NA	NA	NA	NA	NA	NA	NA	NA	NA	NA	NA	NA	NA	NA	NA	NA	NA	NA	NA
	Benzo(g,h,i)perylene	NS	20	NA	NA	NA	NA	NA	NA	NA	NA	NA	NA	NA	NA	NA	NA	NA	NA	NA	NA	NA	NA	NA	NA	NA	NA
	Benzo(k)fluoranthene	NS	100	NA	NA	NA	NA	NA	NA	NA	NA	NA	NA	NA	NA	NA	NA	NA	NA	NA	NA	NA	NA	NA	NA	NA	NA
	Chrysene	NS	70	NA	NA	NA	NA	NA	NA	NA	NA	NA	NA	NA	NA	NA	NA	NA	NA	NA	NA	NA	NA	NA	NA	NA	NA
	Dibenz(a,h)anthracene	NS	40	NA	NA	NA	NA	NA	NA	NA	NA	NA	NA	NA	NA	NA	NA	NA	NA	NA	NA	NA	NA	NA	NA	NA	NA
	Fluoranthene	NS	200	NA	NA	NA	NA	NA	NA	NA	NA	NA	NA	NA	NA	NA	NA	NA	NA	NA	NA	NA	NA	NA	NA	NA	NA
	Fluorene	NS	40	NA	NA	NA	NA	NA	NA	NA	NA	NA	NA	NA	NA	NA	NA	NA	NA	NA	NA	NA	NA	NA	NA	NA	NA
	Indeno(1,2,3-cd)pyrene	NS	100	NA	NA	NA	NA	NA	NA	NA	NA	NA	NA	NA	NA	NA	NA	NA	NA	NA	NA	NA	NA	NA	NA	NA	NA
	2-Methylnaphthalene	2,000	20,000	NA	NA	NA	NA	NA	NA	NA	NA	NA	NA	NA	NA	NA	NA	NA	NA	NA	NA	NA	NA	NA	NA	NA	NA
	Naphthalene	700	20,000	NA	NA	NA	NA	NA	NA	NA	NA	NA	NA	NA	NA	NA	NA	NA	NA	NA	NA	NA	NA	NA	NA	NA	NA
	Phenanthrene	NS	10,000	NA	NA	NA	NA	NA	NA	NA	NA	NA	NA	NA	NA	NA	NA	NA	NA	NA	NA	NA	NA	NA	NA	NA	NA
	Pyrene	NS	20	NA	NA	NA	NA	NA	NA	NA	NA	NA	NA	NA	NA	NA	NA	NA	NA	NA	NA	NA	NA	NA	NA	NA	NA
PCBs																											
(ug/L)	Aroclor 1016	5	10	NA	NA	NA	NA	NA	NA	NA	NA	1.10 U	2.0 U	0.500 U	1.0 U	NA	NA	1.25 U	1.25 U	0.250 U	0.250 U	0.258 U	1.25 U	0.250 U	NA	0.0500 U	NA
	Aroclor 1221	5	10	NA	NA	NA	NA	NA	NA	NA	NA	1.10 U	2.0 U	**3.31 J**	1.0 U	NA	NA	1.25 U	1.25 U	0.250 U	0.250 U	0.258 U	1.25 U	0.250 U	NA	0.0500 U	NA
	Aroclor 1232	5	10	NA	NA	NA	NA	NA	NA	NA	NA	1.10 U	2.0 U	0.500 U	1.0 U	NA	NA	1.25 U	1.25 U	0.250 U	0.250 U	0.258 U	1.25 U	0.250 U	NA	0.0500 U	NA
	Aroclor 1242	5	10	NA	NA	NA	NA	NA	NA	NA	NA	**3.98**	2.0 U	0.500 U	**8.13**	NA	NA	1.25 U	1.25 U	0.250 U	0.250 U	0.258 U	1.25 U	0.250 U	NA	0.0500 U	NA
	Aroclor 1248	5	10	NA	NA	NA	NA	NA	NA	NA	NA	1.10 U	**7.85**	**6.12 J**	1.0 U	NA	NA	1.25 U	1.25 U	0.250 U	0.250 U	0.258 U	1.25 U	0.250 U	NA	**0.0329 J**	NA
	Aroclor 1254	5	10	NA	NA	NA	NA	NA	NA	NA	NA	**10.9**	**9.53**	**5.59 J**	**11.0**	NA	NA	**8.93**	**9.33**	0.250 U	0.250 U	0.258 U	**8.96**	0.250 U	NA	**0.0371 J**	NA
	Aroclor 1260	5	10	NA	NA	NA	NA	NA	NA	NA	NA	1.10 U	2.0 U	0.500 U	1.0 U	NA	NA	1.25 U	1.25 U	0.250 U	0.250 U	0.258 U	1.25 U	0.250 U	NA	0.0500 U	NA
	Aroclor 1262	5	10	NA	NA	NA	NA	NA	NA	NA	NA	NA	NA	NA	1.0 U	NA	NA	1.25 U	1.25 U	0.250 U	0.250 U	0.258 U	1.25 U	0.250 U	NA	NA	NA
	Aroclor 1268	5	10	NA	NA	NA	NA	NA	NA	NA	NA	NA	NA	NA	1.0 U	NA	NA	1.25 U	1.25 U	0.250 U	0.250 U	0.258 U	1.25 U	0.250 U	NA	NA	NA
	Total PCBs	5	10	NA	NA	NA	NA	NA	NA	NA	NA	**14.88**	**17.38**	**15.02 J**	**19.13**	NA	NA	**8.93**	**9.33**	0.250 U	0.250 U	0.258 U	**8.96**	0.250 U	NA	**0.0700 J**	NA
Total Petroleum Hydrocarbons																											
(ug/L)	Total Petroleum Hydrocarbons (C9-C44	5,000	5,000	NA	NA	NA	NA	NA	NA	NA	NA	NA	NA	NA	NA	NA	NA	NA	NA	NA	NA	NA	NA	NA	NA	NA	NA
Metals, total																											
(ug/L)	Antimony	NS	8,000	NA	NA	NA	NA	NA	NA	NA	NA	NA	NA	NA	NA	NA	NA	NA	NA	NA	NA	NA	NA	NA	NA	NA	NA
	Arsenic	NS	900	NA	NA	NA	NA	NA	NA	NA	NA	NA	NA	NA	NA	NA	NA	NA	NA	NA	NA	NA	NA	NA	NA	NA	NA
	Barium	NS	50,000	NA	NA	NA	NA	NA	NA	NA	NA	NA	NA	NA	NA	NA	NA	NA	NA	NA	NA	NA	NA	NA	NA	NA	NA
	Beryllium	NS	200	NA	NA	NA	NA	NA	NA	NA	NA	NA	NA	NA	NA	NA	NA	NA	NA	NA	NA	NA	NA	NA	NA	NA	NA
	Cadmium	NS	4	NA	NA	NA	NA	NA	NA	NA	NA	NA	NA	NA	NA	NA	NA	NA	NA	NA	NA	NA	NA	NA	NA	NA	NA
	Chromium	NS	300	NA	NA	NA	NA	NA	NA	NA	NA	NA	NA	NA	NA	NA	NA	NA	NA	NA	NA	NA	NA	NA	NA	NA	NA
	Lead	NS	10	NA	NA	NA	NA	NA	NA	NA	NA	NA	NA	NA	NA	NA	NA	NA	NA	NA	NA	NA	NA	NA	NA	NA	NA
	Mercury	NS	20	NA	NA	NA	NA	NA	NA	NA	NA	NA	NA	NA	NA	NA	NA	NA	NA	NA	NA	NA	NA	NA	NA	NA	NA
	Nickel	NS	200	NA	NA	NA	NA	NA	NA	NA	NA	NA	NA	NA	NA	NA	NA	NA	NA	NA	NA	NA	NA	NA	NA	NA	NA
	Selenium	NS	100	NA	NA	NA	NA	NA	NA	NA	NA	NA	NA	NA	NA	NA	NA	NA	NA	NA	NA	NA	NA	NA	NA	NA	NA
	Silver	NS	7	NA	NA	NA	NA	NA	NA	NA	NA	NA	NA	NA	NA	NA	NA	NA	NA	NA	NA	NA	NA	NA	NA	NA	NA
	Thallium	NS	3,000	NA	NA	NA	NA	NA	NA	NA	NA	NA	NA	NA	NA	NA	NA	NA	NA	NA	NA	NA	NA	NA	NA	NA	NA
	Vanadium	NS	4,000	NA	NA	NA	NA	NA	NA	NA	NA	NA	NA	NA	NA	NA	NA	NA	NA	NA	NA	NA	NA	NA	NA	NA	NA
	Zinc	NS	900	NA	NA	NA	NA	NA	NA	NA	NA	NA	NA	NA	NA	NA	NA	NA	NA	NA	NA	NA	NA	NA	NA	NA	NA
Metals, dissolved																											
(ug/L)	Antimony	NS	8,000	NA	NA	NA	NA	NA	NA	NA	NA	NA	NA	NA	NA	NA	NA	NA	NA	NA	NA	NA	NA	NA	NA	NA	NA
	Arsenic	NS	900	NA	NA	NA	NA	NA	NA	NA	NA	NA	NA	NA	NA	NA	NA	NA	NA	NA	NA	NA	NA	NA	NA	NA	NA
	Barium	NS	50,000	NA	NA	NA	NA	NA	NA	NA	NA	NA	NA	NA	NA	NA	NA	NA	NA	NA	NA	NA	NA	NA	NA	NA	NA
	Beryllium	NS	200	NA	NA	NA	NA	NA	NA	NA	NA	NA	NA	NA	NA	NA	NA	NA	NA	NA	NA	NA	NA	NA	NA	NA	NA
	Cadmium	NS	4	NA	NA	NA	NA	NA	NA	NA	NA	NA	NA	NA	NA	NA	NA	NA	NA	NA	NA	NA	NA	NA	NA	NA	NA
	Chromium	NS	300	NA	NA	NA	NA	NA	NA	NA	NA	NA	NA	NA	NA	NA	NA	NA	NA	NA	NA	NA	NA	NA	NA	NA	NA
	Lead	NS	10	NA	NA	NA	NA	NA	NA	NA	NA	NA	NA	NA	NA	NA	NA	NA	NA	NA	NA	NA	NA	NA	NA	NA	NA
	Mercury	NS	20	NA	NA	NA	NA	NA	NA	NA	NA	NA	NA	NA	NA	NA	NA	NA	NA	NA	NA	NA	NA	NA	NA	NA	NA
	Nickel	NS	200	NA	NA	NA	NA	NA	NA	NA	NA	NA	NA	NA	NA	NA	NA	NA	NA	NA	NA	NA	NA	NA	NA	NA	NA
	Selenium	NS	100	NA	NA	NA	NA	NA	NA	NA	NA	NA	NA	NA	NA	NA	NA	NA	NA	NA	NA	NA	NA	NA	NA	NA	NA
	Silver	NS	7	NA	NA	NA	NA	NA	NA	NA	NA	NA	NA	NA	NA	NA	NA	NA	NA	NA	NA	NA	NA	NA	NA	NA	NA
	Thallium	NS	3,000	NA	NA	NA	NA	NA	NA	NA	NA	NA	NA	NA	NA	NA	NA	NA	NA	NA	NA	NA	NA	NA	NA	NA	NA
	Vanadium	NS	4,000	NA	NA	NA	NA	NA	NA	NA	NA	NA	NA	NA	NA	NA	NA	NA	NA	NA	NA	NA	NA	NA	NA	NA	NA
	Zinc	NS	900	NA	NA	NA	NA	NA	NA	NA	NA	NA	NA	NA	NA	NA	NA	NA	NA	NA	NA	NA	NA	NA	NA	NA	NA
General Chemistry																											
(ug/L)	Nitrogen, Nitrate	NS	NS	100 U	NA	NA	NA	NA	NA	NA	NA	NA	NA	NA	NA	NA	NA	NA	NA	NA	NA	NA	NA	NA	**110**	**110**	NA
	Sulfate	NS	NS	**13,000**	NA	NA	NA	NA	NA	NA	NA	NA	NA	NA	NA	NA	NA	NA	NA	NA	NA	NA	NA	NA	10,000 U	10,000 U	NA
	Total Organic Carbon	NS	NS	**5,200**	NA	NA	NA	NA	NA	NA	NA	NA	NA	NA	NA	NA	NA	NA	NA	NA	NA	NA	NA	NA	**4,700**	**4,700**	NA

Notes:
ug/L - micrograms per liter.
B - Compound detected in associated method blank
J - Estimated value.
NA - Sample not analyzed for the listed analyte.
N/A - Not applicable.
NS - No MassDEP standards exist for this compound.
U - Compound was not detected at specified quantitation limit.
Values in **Bold** indicate the compound was detected.
VOCs - Volatile Organic Compounds.
PAHs - Polynuclear Aromatic Hydrocarbons.
PCBs - Polychlorinated Biphenyls.
(1) - MassDEP Method 1 standards for C9-C10 aromatic hydrocarbons used.
(2) - MassDEP Method 1 standards for 1,3-Dichloropropene used.
^ - 0.45 micron filtration done in field; 0.20 and 2.0 micron filtration performed in lab.
* - Sample collected on 4/10/2012 for PCB analysis was broken and was recollected on 4/18/2012
** - Lab filtered sample using a 2.0 micron filter and then filtered a second time using a 0.20 micr

Table 2
Summary of Analytical Results for Groundwater Samples -- 2008 through 2014
New Bedford High School
New Bedford, Massachusetts

Analysis	Analyte		Sample ID:	MW-31					MW-32															MW-33				
		Filter Size (micron)^:		N/A	N/A	N/A	N/A	N/A	N/A	N/A	N/A	N/A	N/A	N/A	N/A	N/A	N/A	N/A	N/A	N/A	N/A	N/A	N/A	N/A	N/A	N/A	N/A	N/A
		Sample Date:		10/21/2010	3/8/2011	4/11/2011	8/24/2011	4/10/2012 *	10/21/2010	3/8/2011	3/25/2011	3/25/2011 Field Dup	4/8/2011	4/8/2011 Field Dup	4/28/2011	7/27/2011	8/2/2011	8/2/2011 Field Dup	8/25/2011	2/27/2012	4/11/2012	12/13/2012	1/17/2014	10/21/2010	3/8/2011	4/12/2011	8/24/2011	4/11/2012
		GW-2	GW-3																									
VOCs																												
(ug/L)	Methylene Chloride	2,000	50,000	2.0 U	2.0 U	2.0 U	2.0 U	2.0 U	2.0 U	1,000 U	200 U	200 U	400 U	400 U	400 U	100 U	50 U	100 U	50 U	2.0 U	4.0 U	2.0 U	2.0 U	2.0 U	2.0 U	2.0 U	2.0 U	2.0 U	2.0 U
	1,1-Dichloroethane	2,000	20,000	1.0 U	1.0 U	1.0 U	1.0 U	1.0 U	1.0 U	500 U	100 U	100 U	200 U	200 U	200 U	50 U	25 U	50 U	25 U	1.0 U	2.0 U	1.0 U	1.0 U	1.0 U	1.0 U	1.0 U	1.0 U	1.0 U	1.0 U
	Chloroform	50	20,000	1.0 U	1.0 U	1.0 U	1.0 U	1.0 U	1.0 U	500 U	100 U	100 U	200 U	200 U	200 U	50 U	25 U	50 U	25 U	1.0 U	2.0 U	1.0 U	1.0 U	1.0 U	1.0 U	1.0 U	1.0 U	1.0 U	1.0 U
	Carbon Tetrachloride	2	5,000	1.0 U	1.0 U	1.0 U	1.0 U	1.0 U	1.0 U	500 U	100 U	100 U	200 U	200 U	200 U	50 U	25 U	50 U	25 U	1.0 U	2.0 U	1.0 U	1.0 U	1.0 U	1.0 U	1.0 U	1.0 U	1.0 U	1.0 U
	1,2-Dichloropropane	3	50,000	1.0 U	1.0 U	1.0 U	1.0 U	1.0 U	1.0 U	500 U	100 U	100 U	200 U	200 U	200 U	50 U	25 U	50 U	25 U	1.0 U	2.0 U	1.0 U	1.0 U	1.0 U	1.0 U	1.0 U	1.0 U	1.0 U	1.0 U
	Chlorodibromomethane	20	50,000	1.0 U	1.0 U	1.0 U	1.0 U	1.0 U	1.0 U	500 U	100 U	100 U	200 U	200 U	200 U	50 U	25 U	50 U	25 U	1.0 U	2.0 U	1.0 U	1.0 U	1.0 U	1.0 U	1.0 U	1.0 U	1.0 U	1.0 U
	1,1,2-Trichloroethane	900	50,000	1.0 U	1.0 U	1.0 U	1.0 U	1.0 U	1.0 U	500 U	100 U	100 U	200 U	200 U	200 U	50 U	25 U	50 U	25 U	1.0 U	2.0 U	1.0 U	1.0 U	1.0 U	1.0 U	1.0 U	1.0 U	1.0 U	1.0 U
	Tetrachloroethylene	50	30,000	1.0 U	1.0 U	1.0 U	1.0 U	1.0 U	1.0 U	500 U	100 U	100 U	200 U	200 U	200 U	50 U	25 U	50 U	25 U	1.0 U	2.0 U	1.0 U	1.0 U	1.0 U	1.0 U	1.0 U	1.0 U	1.0 U	1.0 U
	Chlorobenzene	200	1,000	1.0 U	1.0 U	1.0 U	1.0 U	1.0 U	1.0 U	500 U	100 U	100 U	200 U	200 U	200 U	50 U	25 U	50 U	25 U	1.0 U	2.0 U	1.0 U	1.0 U	1.0 U	1.0 U	1.0 U	1.0 U	1.0 U	1.0 U
	Trichlorofluoromethane (Freon 11)	NS	NS	2.0 U	2.0 U	2.0 U	2.0 U	2.0 U	2.0 U	1,000 U	200 U	200 U	400 U	400 U	400 U	100 U	50 U	100 U	50 U	2.0 U	4.0 U	2.0 U	2.0 U	2.0 U	2.0 U	2.0 U	2.0 U	2.0 U	2.0 U
	1,2-Dichloroethane	5	20,000	1.0 U	1.0 U	1.0 U	1.0 U	1.0 U	1.0 U	500 U	100 U	100 U	200 U	200 U	200 U	50 U	25 U	50 U	25 U	1.0 U	2.0 U	1.0 U	1.0 U	1.0 U	1.0 U	1.0 U	1.0 U	1.0 U	1.0 U
	1,1,1-Trichloroethane	4,000	20,000	1.0 U	1.0 U	1.0 U	1.0 U	1.0 U	1.0 U	500 U	100 U	100 U	200 U	200 U	200 U	50 U	25 U	50 U	25 U	1.0 U	2.0 U	1.0 U	1.0 U	1.0 U	1.0 U	1.0 U	1.0 U	1.0 U	1.0 U
	Bromodichloromethane	6	50,000	1.0 U	1.0 U	1.0 U	1.0 U	1.0 U	1.0 U	500 U	100 U	100 U	200 U	200 U	200 U	50 U	25 U	50 U	25 U	1.0 U	2.0 U	1.0 U	1.0 U	1.0 U	1.0 U	1.0 U	1.0 U	1.0 U	1.0 U
	trans-1,3-Dichloropropene	10(2)	200(2)	0.50 U	0.50 U	0.50 U	0.50 U	0.50 U	0.50 U	250 U	50 U	50 U	100 U	100 U	100 U	25 U	12 U	25 U	12 U	0.5 U	1.0 U	0.50 U	0.50 U	0.50 U	0.50 U	0.50 U	0.50 U	0.50 U	0.50 U
	cis-1,3-Dichloropropene	10(2)	200(2)	0.50 U	0.50 U	0.50 U	0.50 U	0.50 U	0.50 U	250 U	50 U	50 U	100 U	100 U	100 U	25 U	12 U	25 U	12 U	0.5 U	1.0 U	0.50 U	0.50 U	0.50 U	0.50 U	0.50 U	0.50 U	0.50 U	0.50 U
	1,1-Dichloropropene	NS	NS	2.0 U	2.0 U	2.0 U	2.0 U	2.0 U	2.0 U	1,000 U	200 U	200 U	400 U	400 U	400 U	100 U	50 U	100 U	50 U	2.0 U	4.0 U	2.0 U	2.0 U	2.0 U	2.0 U	2.0 U	2.0 U	2.0 U	2.0 U
	Bromoform	700	50,000	2.0 U	2.0 U	2.0 U	2.0 U	2.0 U	2.0 U	1,000 U	200 U	200 U	400 U	400 U	400 U	100 U	50 U	100 U	50 U	2.0 U	4.0 U	2.0 U	2.0 U	2.0 U	2.0 U	2.0 U	2.0 U	2.0 U	2.0 U
	1,1,2,2-Tetrachloroethane	9	50,000	1.0 U	1.0 U	1.0 U	1.0 U	1.0 U	1.0 U	500 U	100 U	100 U	200 U	200 U	200 U	50 U	25 U	50 U	25 U	1.0 U	2.0 U	1.0 U	1.0 U	1.0 U	1.0 U	1.0 U	1.0 U	1.0 U	1.0 U
	Benzene	1,000	10,000	1.0 U	1.0 U	1.0 U	0.50 U	0.50 U	1.0 U	500 U	100 U	100 U	200 U	200 U	200 U	25 U	12 U	25 U	12 U	0.5 U	1.0 U	0.50 U	0.50 U	1.0 U	1.0 U	1.0 U	0.50 U	0.50 U
	Toluene	50,000	40,000	1.0 U	1.0 U	1.0 U	1.0 U	1.0 U	1.0 U	500 U	100 U	100 U	200 U	200 U	200 U	50 U	25 U	50 U	25 U	1.0 U	2.0 U	1.0 U	1.0 U	1.0 U	1.0 U	1.0 U	1.0 U	1.0 U	1.0 U
	Ethylbenzene	20,000	5,000	1.0 U	1.0 U	1.0 U	1.0 U	1.0 U	1.0 U	500 U	100 U	100 U	200 U	200 U	200 U	50 U	25 U	50 U	25 U	1.0 U	2.0 U	1.0 U	1.0 U	1.0 U	1.0 U	1.0 U	1.0 U	1.0 U	1.0 U
	Chloromethane	NS	NS	2.0 U	2.0 U	2.0 U	2.0 U	2.0 U	2.0 U	1,000 U	200 U	200 U	400 U	400 U	400 U	100 U	50 U	100 U	50 U	2.0 U	4.0 U	2.0 U	2.0 U	2.0 U	2.0 U	2.0 U	2.0 U	2.0 U	2.0 U
	Bromomethane	7	800	2.0 U	2.0 U	2.0 U	2.0 U	2.0 U	2.0 U	1,000 U	200 U	200 U	400 U	400 U	400 U	100 U	50 U	100 U	50 U	2.0 U	4.0 U	2.0 U	2.0 U	2.0 U	2.0 U	2.0 U	2.0 U	2.0 U	2.0 U
	Vinyl Chloride	2	50,000	1.0 U	1.0 U	1.0 U	1.0 U	1.0 U	1.0 U	500 U	100 U	100 U	200 U	200 U	200 U	50 U	25 U	50 U	25 U	1.0 U	**2.0**	**15**	**11**	1.0 U	1.0 U	1.0 U	1.0 U	1.0 U
	Chloroethane	NS	NS	2.0 U	2.0 U	2.0 U	2.0 U	2.0 U	2.0 U	1,000 U	200 U	200 U	400 U	400 U	400 U	100 U	50 U	100 U	50 U	2.0 U	4.0 U	2.0 U	2.0 U	2.0 U	2.0 U	2.0 U	2.0 U	2.0 U	2.0 U
	1,1-Dichloroethylene	80	30,000	1.0 U	1.0 U	1.0 U	1.0 U	1.0 U	1.0 U	500 U	100 U	100 U	200 U	200 U	200 U	50 U	25 U	50 U	25 U	1.0 U	2.0 U	1.0 U	1.0 U	1.0 U	1.0 U	1.0 U	1.0 U	1.0 U	1.0 U
	trans-1,2-Dichloroethylene	80	50,000	1.0 U	1.0 U	1.0 U	1.0 U	1.0 U	1.0 U	500 U	**230**	**220**	200 U	200 U	200 U	50 U	**27**	50 U	**29**	**3.5**	**6.5**	**1.5**	1.0 U	1.0 U	1.0 U	1.0 U	1.0 U	1.0 U
	Trichloroethylene	5	5,000	1.0 U	1.0 U	1.0 U	1.0 U	1.0 U	**1.1**	**17,000**	**26,000**	**26,000**	**21,000**	**21,000**	**4,700**	**2,600**	**2,500**	**2,000**	**2,800**	**110**	**170**	**2.2**	**1.1**	1.0 U	1.0 U	1.0 U	**1.1**	1.0 U
	1,2-Dichlorobenzene	8,000	2,000	1.0 U	1.0 U	1.0 U	1.0 U	1.0 U	1.0 U	500 U	100 U	100 U	200 U	200 U	200 U	50 U	25 U	50 U	25 U	1.0 U	2.0 U	1.0 U	1.0 U	1.0 U	1.0 U	1.0 U	1.0 U	1.0 U	1.0 U
	1,3-Dichlorobenzene	6,000	50,000	1.0 U	1.0 U	1.0 U	1.0 U	1.0 U	1.0 U	500 U	100 U	100 U	200 U	200 U	200 U	50 U	25 U	50 U	25 U	1.0 U	2.0 U	1.0 U	1.0 U	1.0 U	1.0 U	1.0 U	1.0 U	1.0 U	1.0 U
	1,4-Dichlorobenzene	60	8,000	1.0 U	1.0 U	1.0 U	1.0 U	1.0 U	1.0 U	500 U	100 U	100 U	200 U	200 U	200 U	50 U	25 U	50 U	25 U	1.0 U	2.0 U	1.0 U	1.0 U	1.0 U	1.0 U	1.0 U	1.0 U	1.0 U	1.0 U
	Methyl tert-Butyl Ether (MTBE)	50,000	50,000	2.0 U	2.0 U	2.0 U	2.0 U	2.0 U	2.0 U	1,000 U	200 U	200 U	400 U	400 U	400 U	100 U	50 U	100 U	50 U	2.0 U	4.0 U	2.0 U	2.0 U	2.0 U	2.0 U	2.0 U	2.0 U	2.0 U	2.0 U
	m+p Xylene	2	50,000	2.0 U	2.0 U	2.0 U	2.0 U	2.0 U	2.0 U	1,000 U	200 U	200 U	400 U	400 U	400 U	100 U	50 U	100 U	50 U	2.0 U	4.0 U	2.0 U	2.0 U	2.0 U	2.0 U	2.0 U	2.0 U	2.0 U	2.0 U
	o-Xylene	2	50,000	1.0 U	1.0 U	1.0 U	1.0 U	1.0 U	1.0 U	500 U	100 U	100 U	200 U	200 U	200 U	50 U	25 U	50 U	25 U	1.0 U	2.0 U	1.0 U	1.0 U	1.0 U	1.0 U	1.0 U	1.0 U	1.0 U	1.0 U
	cis-1,2-Dichloroethylene	20	50,000	1.0 U	1.0 U	1.0 U	1.0 U	1.0 U	**4.5**	**910**	**980**	**1,000**	**480**	**470**	**250**	**200**	**220**	**180**	**250**	**50**	**190**	**71**	**8.1**	1.0 U	1.0 U	1.0 U	1.0 U	1.0 U
	Dibromomethane	NS	NS	2.0 U	2.0 U	2.0 U	2.0 U	2.0 U	2.0 U	1,000 U	200 U	200 U	400 U	400 U	400 U	100 U	50 U	100 U	50 U	2.0 U	4.0 U	2.0 U	2.0 U	2.0 U	2.0 U	2.0 U	2.0 U	2.0 U	2.0 U
	1,2,3-Trichloropropane	NS	NS	2.0 U	2.0 U	2.0 U	2.0 U	2.0 U	2.0 U	1,000 U	200 U	200 U	400 U	400 U	400 U	100 U	50 U	100 U	50 U	2.0 U	4.0 U	2.0 U	2.0 U	2.0 U	2.0 U	2.0 U	2.0 U	2.0 U	2.0 U
	Styrene	100	6,000	1.0 U	1.0 U	1.0 U	1.0 U	1.0 U	1.0 U	500 U	100 U	100 U	200 U	200 U	200 U	50 U	25 U	50 U	25 U	1.0 U	2.0 U	1.0 U	1.0 U	1.0 U	1.0 U	1.0 U	1.0 U	1.0 U	1.0 U
	Dichlorodifluoromethane (Freon 12)	NS	NS	2.0 U	2.0 U	2.0 U	2.0 U	2.0 U	2.0 U	1,000 U	200 U	200 U	400 U	400 U	400 U	100 U	50 U	100 U	50 U	2.0 U	4.0 U	2.0 U	2.0 U	2.0 U	2.0 U	2.0 U	2.0 U	2.0 U	2.0 U
	Acetone	50,000	50,000	5.0 U	5.0 U	5.0 U	5.0 U	5.0 U	5.0 U	2,500 U	500 U	500 U	1,000 U	1,000 U	1,000 U	250 U	120 U	250 U	120 U	5.0 U	10 U	5.0 U	5.0 U	5.0 U	5.0 U	5.0 U	5.0 U	5.0 U	5.0 U
	Carbon Disulfide	NS	NS	2.0 U	2.0 U	2.0 U	2.0 U	2.0 U	2.0 U	1,000 U	200 U	200 U	400 U	400 U	400 U	100 U	50 U	100 U	50 U	2.0 U	4.0 U	2.0 U	2.0 U	2.0 U	2.0 U	2.0 U	2.0 U	2.0 U	2.0 U
	2-Butanone (MEK)	50,000	50,000	5.0 U	5.0 U	5.0 U	5.0 U	5.0 U	5.0 U	2,500 U	500 U	500 U	1,000 U	1,000 U	1,000 U	250 U	120 U	250 U	120 U	5.0 U	10 U	5.0 U	5.0 U	5.0 U	5.0 U	5.0 U	5.0 U	5.0 U	5.0 U
	4-Methyl-2-pentanone (MIBK)	50,000	50,000	5.0 U	5.0 U	5.0 U	5.0 U	5.0 U	5.0 U	2,500 U	500 U	500 U	1,000 U	1,000 U	1,000 U	250 U	120 U	250 U	120 U	5.0 U	10 U	5.0 U	5.0 U	5.0 U	5.0 U	5.0 U	5.0 U	5.0 U	5.0 U
	2-Hexanone (MBK)	NS	NS	5.0 U	5.0 U	5.0 U	5.0 U	5.0 U	5.0 U	2,500 U	500 U	500 U	1,000 U	1,000 U	1,000 U	250 U	120 U	250 U	120 U	5.0 U	10 U	5.0 U	5.0 U	5.0 U	5.0 U	5.0 U	5.0 U	5.0 U	5.0 U
	Bromochloromethane	NS	NS	2.0 U	2.0 U	2.0 U	2.0 U	2.0 U	2.0 U	1,000 U	200 U	200 U	400 U	400 U	400 U	100 U	50 U	100 U	50 U	2.0 U	4.0 U	2.0 U	2.0 U	2.0 U	2.0 U	2.0 U	2.0 U	2.0 U	2.0 U
	Tetrahydrofuran	NS	NS	10 U	5.0 U	5.0 U	5.0 U	5.0 U	10 U	2,500 U	500 U	500 U	1,000 U	1,000 U	1,000 U	250 U	120 U	250 U	120 U	5.0 U	10 U	5.0 U	2.0 U	10 U	5.0 U	5.0 U	5.0 U	5.0 U
	2,2-Dichloropropane	NS	NS	2.0 U	2.0 U	2.0 U	2.0 U	2.0 U	2.0 U	1,000 U	200 U	200 U	400 U	400 U	400 U	100 U	50 U	100 U	50 U	2.0 U	4.0 U	2.0 U	2.0 U	2.0 U	2.0 U	2.0 U	2.0 U	2.0 U	2.0 U
	1,2-Dibromoethane (EDB)	2	50,000	2.0 U	2.0 U	2.0 U	2.0 U	2.0 U	2.0 U	1,000 U	200 U	200 U	400 U	400 U	400 U	100 U	50 U	100 U	50 U	2.0 U	4.0 U	2.0 U	2.0 U	2.0 U	2.0 U	2.0 U	2.0 U	2.0 U	2.0 U
	1,3-Dichloropropane	NS	NS	2.0 U	2.0 U	2.0 U	2.0 U	2.0 U	2.0 U	1,000 U	200 U	200 U	400 U	400 U	400 U	100 U	50 U	100 U	50 U	2.0 U	4.0 U	2.0 U	2.0 U	2.0 U	2.0 U	2.0 U	2.0 U	2.0 U	2.0 U
	1,1,1,2-Tetrachloroethane	10	50,000	1.0 U	1.0 U	1.0 U	1.0 U	1.0 U	1.0 U	500 U	100 U	100 U	200 U	200 U	200 U	50 U	25 U	50 U	25 U	1.0 U	2.0 U	1.0 U	1.0 U	1.0 U	1.0 U	1.0 U	1.0 U	1.0 U	1.0 U
	Bromobenzene	NS	NS	2.0 U	2.0 U	2.0 U	2.0 U	2.0 U	2.0 U	1,000 U	200 U	200 U	400 U	400 U	400 U	100 U	50 U	100 U	50 U	2.0 U	4.0 U	2.0 U	2.0 U	2.0 U	2.0 U	2.0 U	2.0 U	2.0 U	2.0 U
	n-Butylbenzene	4,000(1)	50,000(1)	2.0 U	2.0 U	2.0 U	2.0 U	2.0 U	2.0 U	1,000 U	200 U	200 U	400 U	400 U	400 U	100 U	50 U	100 U	50 U	2.0 U	4.0 U	2.0 U	2.0 U	2.0 U	2.0 U	2.0 U	2.0 U	2.0 U	2.0 U
	sec-Butylbenzene	4,000(1)	50,000(1)	2.0 U	2.0 U	2.0 U	2.0 U	2.0 U	2.0 U	1,000 U	200 U	200 U	400 U	400 U	400 U	100 U	50 U	100 U	50 U	2.0 U	4.0 U	2.0 U	2.0 U	2.0 U	2.0 U	2.0 U	2.0 U	2.0 U	2.0 U
	tert-Butylbenzene	4,000(1)	50,000(1)	2.0 U	2.0 U	2.0 U	2.0 U	2.0 U	2.0 U	1,000 U	200 U	200 U	400 U	400 U	400 U	100 U	50 U	100 U	50 U	2.0 U	4.0 U	2.0 U	2.0 U	2.0 U	2.0 U	2.0 U	2.0 U	2.0 U	2.0 U
	2-Chlorotoluene	NS	NS	2.0 U	2.0 U	2.0 U	2.0 U	2.0 U	2.0 U	1,000 U	200 U	200 U	400 U	400 U	400 U	100 U	50 U	100 U	50 U	2.0 U	4.0 U	2.0 U	2.0 U	2.0 U	2.0 U	2.0 U	2.0 U	2.0 U	2.0 U
	4-Chlorotoluene	NS	NS	2.0 U	2.0 U	2.0 U	2.0 U	2.0 U	2.0 U	1,000 U	200 U	200 U	400 U	400 U	400 U	100 U	50 U	100 U	50 U	2.0 U	4.0 U	2.0 U	2.0 U	2.0 U	2.0 U	2.0 U	2.0 U	2.0 U	2.0 U
	1,2-Dibromo-3-chloropropane (DBCP)	NS	NS	2.0 U	2.0 U	2.0 U	2.0 U	2.0 U	2.0 U	1,000 U	200 U	200 U	400 U	400 U	400 U	100 U	50 U	100 U	50 U	2.0 U	4.0 U	2.0 U	2.0 U	2.0 U	2.0 U	2.0 U	2.0 U	2.0 U	2.0 U
	Hexachlorobutadiene	50	3,000	0.60 U	0.60 U	0.60 U	0.60 U	0.60 U	0.60 U	300 U	60 U	60 U	120 U	120 U	120 U	30 U	15 U	30 U	15 U	0.6 U	1.2 U	0.60 U	0.60 U	0.60 U	0.60 U	0.60 U	0.60 U	0.60 U	0.60 U
	Isopropylbenzene (Cumene)	4,000(1)	50,000(1)	2.0 U	2.0 U	2.0 U	2.0 U	2.0 U	2.0 U	1,000 U	200 U	200 U	400 U	400 U	400 U	100 U	50 U	100 U	50 U	2.0 U	4.0 U	2.0 U	2.0 U	2.0 U	2.0 U	2.0 U	2.0 U	2.0 U	2.0 U
	p-Isopropyltoluene (p-Cymene)	4,000(1)	50,000(1)	2.0 U	2.0 U	2.0 U	2.0 U	2.0 U	2.0 U	1,000 U	200 U	200 U	400 U	400 U	400 U	100 U	50 U	100 U	50 U	2.0 U	4.0 U	2.0 U	2.0 U	2.0 U	2.0 U	2.0 U	2.0 U	2.0 U	2.0 U
	Naphthalene	700	20,000	2.0 U	2.0 U	2.0 U	2.0 U	2.0 U	2.0 U	1,000 U	200 U	200 U	400 U	400 U	400 U	100 U	50 U	100 U	50 U	2.0 U	4.0 U	2.0 U	2.0 U	2.0 U	2.0 U	2.0 U	2.0 U	2.0 U	2.0 U
	n-Propylbenzene	4,000(1)	50,000(1)	2.0 U	2.0 U	2.0 U	2.0 U	2.0 U	2.0 U	1,000 U	200 U	200 U	400 U	400 U	400 U	100 U	50 U	100 U	50 U	2.0 U	4.0 U	2.0 U	2.0 U	2.0 U	2.0 U	2.0 U	2.0 U	2.0 U	2.0 U
	1,2,3-Trichlorobenzene	NS	NS	2.0 U	2.0 U	2.0 U	2.0 U	2.0 U	2.0 U	1,000 U	200 U	200 U	400 U	400 U	400 U	100 U	50 U	100 U	50 U	2.0 U	4.0 U	2.0 U	2.0 U	2.0 U	2.0 U	2.0 U	2.0 U	2.0 U	2.0 U
	1,2,4-Trichlorobenzene	200	50,000	2.0 U	2.0 U	2.0 U	2.0 U	2.0 U	2.0 U	1,000 U	200 U	200 U	400 U	400 U	400 U	100 U	50 U	100 U	50 U	2.0 U	4.0 U	2.0 U	2.0 U	2.0 U	2.0 U	2.0 U	2.0 U	2.0 U	2.0 U
	1,3,5-Trimethylbenzene	4,000(1)	50,000(1)	2.0 U	2.0 U	2.0 U	2.0 U	2.0 U	2.0 U	1,000 U	200 U	200 U	400 U	400 U	400 U	100 U	50 U	100 U	50 U	2.0 U	4.0 U	2.0 U	2.0 U	2.0 U	2.0 U	2.0 U	2.0 U	2.0 U	2.0 U
	1,2,4-Trimethylbenzene	4,000(1)	50,000(1)	2.0 U	2.0 U	2.0 U	2.0 U	2.0 U	2.0 U	1,000 U	200 U	200 U	400 U	400 U	400 U	100 U	50 U	100 U	50 U	2.0 U	4.0 U	2.0 U	2.0 U	2.0 U	2.0 U	2.0 U	2.0 U	2.0 U	2.0 U
	Diethyl Ether	NS	NS	2.0 U	2.0 U	2.0 U	2.0 U	2.0 U	2.0 U	1,000 U	200 U	200 U	400 U	400 U	400 U	100 U	50 U	100 U	50 U	2.0 U	4.0 U	2.0 U	2.0 U	2.0 U	2.0 U	2.0 U	2.0 U	2.0 U	2.0 U
	Diisopropyl Ether (DIPE)	NS	NS	2.0 U	2.0 U	2.0 U	2.0 U	2.0 U	2.0 U	1,000 U	200 U	200 U	400 U	400 U	400 U	100 U	50 U	100 U	50 U	2.0 U	4.0 U	2.0 U	2.0 U	2.0 U	2.0 U	2.0 U	2.0 U	2.0 U	2.0 U
	tert-Butyl Ethyl Ether (TBEE)	NS	NS	2.0 U	2.0 U	2.0 U	2.0 U	2.0 U	2.0 U	1,000 U	200 U	200 U	400 U	400 U	400 U	100 U	50 U	100 U	50 U	2.0 U	4.0 U	2.0 U	2.0 U	2.0 U	2.0 U	2.0 U	2.0 U	2.0 U	2.0 U
	tert-Amyl Methyl Ether (TAME)	NS	NS	2.0 U	2.0 U	2.0 U	2.0 U	2.0 U	2.0 U	1,000 U	200 U	200 U	400 U	400 U	400 U	100 U	50 U	100 U	50 U	2.0 U	4.0 U	2.0 U	2.0 U	2.0 U	2.0 U	2.0 U	2.0 U	2.0 U	2.0 U
	1,4-Dioxane	6,000	50,000	250 U	250 U	250 U	250 U	250 U	250 U	120,000 U	25,000 U	25,000 U	50,000 U	50,000 U	50,000 U	12,000 U	6,200 U	12,000 U	6,200 U	250 U	500 U	250 U	250 U	250 U	250 U	250 U	250 U	250 U	250 U

Table 2
Summary of Analytical Results for Groundwater Samples -- 2008 through 2014
New Bedford High School
New Bedford, Massachusetts

Analysis	Analyte	Sample ID:		MW-31					MW-32															MW-33				
		Filter Size (micron)^:		N/A	N/A	N/A	N/A	N/A	N/A	N/A	N/A	N/A	N/A	N/A	N/A	N/A	N/A	N/A	N/A	N/A	N/A	N/A	N/A	N/A	N/A	N/A	N/A	N/A
		Sample Date:		10/21/2010	3/8/2011	4/11/2011	8/24/2011	4/10/2012 *	10/21/2010	3/8/2011	3/25/2011	3/25/2011 Field Dup	4/8/2011	4/8/2011 Field Dup	4/28/2011	7/27/2011	8/2/2011	8/2/2011 Field Dup	8/25/2011	2/27/2012	4/11/2012	12/13/2012	1/17/2014	10/21/2010	3/8/2011	4/12/2011	8/24/2011	4/11/2012
		GW-2	GW-3																									
PAHs																												
(ug/L)	Acenaphthene	NS	10,000	NA	NA	NA	NA	NA	NA	NA	NA	NA	NA	NA	NA	NA	NA	NA	NA	NA	NA	NA	NA	NA	NA	NA	NA	NA
	Acenaphthylene	10,000	40	NA	NA	NA	NA	NA	NA	NA	NA	NA	NA	NA	NA	NA	NA	NA	NA	NA	NA	NA	NA	NA	NA	NA	NA	NA
	Anthracene	NS	30	NA	NA	NA	NA	NA	NA	NA	NA	NA	NA	NA	NA	NA	NA	NA	NA	NA	NA	NA	NA	NA	NA	NA	NA	NA
	Benzo(a)anthracene	NS	1,000	NA	NA	NA	NA	NA	NA	NA	NA	NA	NA	NA	NA	NA	NA	NA	NA	NA	NA	NA	NA	NA	NA	NA	NA	NA
	Benzo(a)pyrene	NS	500	NA	NA	NA	NA	NA	NA	NA	NA	NA	NA	NA	NA	NA	NA	NA	NA	NA	NA	NA	NA	NA	NA	NA	NA	NA
	Benzo(b)fluoranthene	NS	400	NA	NA	NA	NA	NA	NA	NA	NA	NA	NA	NA	NA	NA	NA	NA	NA	NA	NA	NA	NA	NA	NA	NA	NA	NA
	Benzo(g,h,i)perylene	NS	20	NA	NA	NA	NA	NA	NA	NA	NA	NA	NA	NA	NA	NA	NA	NA	NA	NA	NA	NA	NA	NA	NA	NA	NA	NA
	Benzo(k)fluoranthene	NS	100	NA	NA	NA	NA	NA	NA	NA	NA	NA	NA	NA	NA	NA	NA	NA	NA	NA	NA	NA	NA	NA	NA	NA	NA	NA
	Chrysene	NS	70	NA	NA	NA	NA	NA	NA	NA	NA	NA	NA	NA	NA	NA	NA	NA	NA	NA	NA	NA	NA	NA	NA	NA	NA	NA
	Dibenz(a,h)anthracene	NS	40	NA	NA	NA	NA	NA	NA	NA	NA	NA	NA	NA	NA	NA	NA	NA	NA	NA	NA	NA	NA	NA	NA	NA	NA	NA
	Fluoranthene	NS	200	NA	NA	NA	NA	NA	NA	NA	NA	NA	NA	NA	NA	NA	NA	NA	NA	NA	NA	NA	NA	NA	NA	NA	NA	NA
	Fluorene	NS	40	NA	NA	NA	NA	NA	NA	NA	NA	NA	NA	NA	NA	NA	NA	NA	NA	NA	NA	NA	NA	NA	NA	NA	NA	NA
	Indeno(1,2,3-cd)pyrene	NS	100	NA	NA	NA	NA	NA	NA	NA	NA	NA	NA	NA	NA	NA	NA	NA	NA	NA	NA	NA	NA	NA	NA	NA	NA	NA
	2-Methylnaphthalene	2,000	20,000	NA	NA	NA	NA	NA	NA	NA	NA	NA	NA	NA	NA	NA	NA	NA	NA	NA	NA	NA	NA	NA	NA	NA	NA	NA
	Naphthalene	700	20,000	NA	NA	NA	NA	NA	NA	NA	NA	NA	NA	NA	NA	NA	NA	NA	NA	NA	NA	NA	NA	NA	NA	NA	NA	NA
	Phenanthrene	NS	10,000	NA	NA	NA	NA	NA	NA	NA	NA	NA	NA	NA	NA	NA	NA	NA	NA	NA	NA	NA	NA	NA	NA	NA	NA	NA
	Pyrene	NS	20	NA	NA	NA	NA	NA	NA	NA	NA	NA	NA	NA	NA	NA	NA	NA	NA	NA	NA	NA	NA	NA	NA	NA	NA	NA
PCBs																												
(ug/L)	Aroclor 1016	5	10	NA	NA	NA	0.0500 U	0.0532 U	NA	NA	NA	NA	NA	NA	NA	NA	NA	NA	0.0500 U	0.0500 U	0.0500 U	0.25 U	NA	NA	NA	NA	0.0500 U	0.0500 U
	Aroclor 1221	5	10	NA	NA	NA	0.0500 U	0.0532 U	NA	NA	NA	NA	NA	NA	NA	NA	NA	NA	0.0500 U	0.0500 U	0.0500 U	0.25 U	NA	NA	NA	NA	0.0500 U	0.0500 U
	Aroclor 1232	5	10	NA	NA	NA	0.0500 U	0.0532 U	NA	NA	NA	NA	NA	NA	NA	NA	NA	NA	0.0500 U	0.0500 U	0.0500 U	0.25 U	NA	NA	NA	NA	0.0500 U	0.0500 U
	Aroclor 1242	5	10	NA	NA	NA	0.0500 U	0.0532 U	NA	NA	NA	NA	NA	NA	NA	NA	NA	NA	0.0500 U	0.0500 U	0.0500 U	0.25 U	NA	NA	NA	NA	0.0500 U	0.0500 U
	Aroclor 1248	5	10	NA	NA	NA	0.0500 U	0.0532 U	NA	NA	NA	NA	NA	NA	NA	NA	NA	NA	0.0500 U	**0.0889**	**0.0858 J**	0.25 U	NA	NA	NA	NA	0.0500 U	**0.0242 J**
	Aroclor 1254	5	10	NA	NA	NA	**0.0685**	**0.0547 J**	NA	NA	NA	NA	NA	NA	NA	NA	NA	NA	**0.121**	**0.2420**	**0.147 J**	0.25 U	NA	NA	NA	NA	**0.0630**	**0.0228 J**
	Aroclor 1260	5	10	NA	NA	NA	0.0500 U	0.0532 U	NA	NA	NA	NA	NA	NA	NA	NA	NA	NA	0.0500 U	0.0500 U	0.0500 U	0.25 U	NA	NA	NA	NA	0.0500 U	0.0500 U
	Aroclor 1262	5	10	NA	NA	NA	NA	NA	NA	NA	NA	NA	NA	NA	NA	NA	NA	NA	NA	NA	NA	0.25 U	NA	NA	NA	NA	NA	NA
	Aroclor 1268	5	10	NA	NA	NA	NA	NA	NA	NA	NA	NA	NA	NA	NA	NA	NA	NA	NA	NA	NA	0.25 U	NA	NA	NA	NA	NA	NA
	Total PCBs	5	10	NA	NA	NA	**0.0685**	**0.0547 J**	NA	NA	NA	NA	NA	NA	NA	NA	NA	NA	**0.121**	**0.3309**	**0.2328 J**	0.25 U	NA	NA	NA	NA	**0.0630**	**0.0470 J**
Total Petroleum Hydrocarbons																												
(ug/L)	Total Petroleum Hydrocarbons (C9-C44	5,000	5,000	NA	NA	NA	NA	NA	NA	NA	NA	NA	NA	NA	NA	NA	NA	NA	NA	NA	NA	NA	NA	NA	NA	NA	NA	NA
Metals, total																												
(ug/L)	Antimony	NS	8,000	NA	NA	NA	NA	NA	NA	NA	NA	NA	NA	NA	NA	NA	NA	NA	NA	NA	NA	NA	NA	NA	NA	NA	NA	NA
	Arsenic	NS	900	NA	NA	NA	NA	NA	NA	NA	NA	NA	NA	NA	NA	NA	NA	NA	NA	NA	NA	NA	NA	NA	NA	NA	NA	NA
	Barium	NS	50,000	NA	NA	NA	NA	NA	NA	NA	NA	NA	NA	NA	NA	NA	NA	NA	NA	NA	NA	NA	NA	NA	NA	NA	NA	NA
	Beryllium	NS	200	NA	NA	NA	NA	NA	NA	NA	NA	NA	NA	NA	NA	NA	NA	NA	NA	NA	NA	NA	NA	NA	NA	NA	NA	NA
	Cadmium	NS	4	NA	NA	NA	NA	NA	NA	NA	NA	NA	NA	NA	NA	NA	NA	NA	NA	NA	NA	NA	NA	NA	NA	NA	NA	NA
	Chromium	NS	300	NA	NA	NA	NA	NA	NA	NA	NA	NA	NA	NA	NA	NA	NA	NA	NA	NA	NA	NA	NA	NA	NA	NA	NA	NA
	Lead	NS	10	NA	NA	NA	NA	NA	NA	NA	NA	NA	NA	NA	NA	NA	NA	NA	NA	NA	NA	NA	NA	NA	NA	NA	NA	NA
	Mercury	NS	20	NA	NA	NA	NA	NA	NA	NA	NA	NA	NA	NA	NA	NA	NA	NA	NA	NA	NA	NA	NA	NA	NA	NA	NA	NA
	Nickel	NS	200	NA	NA	NA	NA	NA	NA	NA	NA	NA	NA	NA	NA	NA	NA	NA	NA	NA	NA	NA	NA	NA	NA	NA	NA	NA
	Selenium	NS	100	NA	NA	NA	NA	NA	NA	NA	NA	NA	NA	NA	NA	NA	NA	NA	NA	NA	NA	NA	NA	NA	NA	NA	NA	NA
	Silver	NS	7	NA	NA	NA	NA	NA	NA	NA	NA	NA	NA	NA	NA	NA	NA	NA	NA	NA	NA	NA	NA	NA	NA	NA	NA	NA
	Thallium	NS	3,000	NA	NA	NA	NA	NA	NA	NA	NA	NA	NA	NA	NA	NA	NA	NA	NA	NA	NA	NA	NA	NA	NA	NA	NA	NA
	Vanadium	NS	4,000	NA	NA	NA	NA	NA	NA	NA	NA	NA	NA	NA	NA	NA	NA	NA	NA	NA	NA	NA	NA	NA	NA	NA	NA	NA
	Zinc	NS	900	NA	NA	NA	NA	NA	NA	NA	NA	NA	NA	NA	NA	NA	NA	NA	NA	NA	NA	NA	NA	NA	NA	NA	NA	NA
Metals, dissolved																												
(ug/L)	Antimony	NS	8,000	NA	NA	NA	NA	NA	NA	NA	NA	NA	NA	NA	NA	NA	NA	NA	NA	NA	NA	NA	NA	NA	NA	NA	NA	NA
	Arsenic	NS	900	NA	NA	NA	NA	NA	NA	NA	NA	NA	NA	NA	NA	NA	NA	NA	NA	NA	NA	NA	NA	NA	NA	NA	NA	NA
	Barium	NS	50,000	NA	NA	NA	NA	NA	NA	NA	NA	NA	NA	NA	NA	NA	NA	NA	NA	NA	NA	NA	NA	NA	NA	NA	NA	NA
	Beryllium	NS	200	NA	NA	NA	NA	NA	NA	NA	NA	NA	NA	NA	NA	NA	NA	NA	NA	NA	NA	NA	NA	NA	NA	NA	NA	NA
	Cadmium	NS	4	NA	NA	NA	NA	NA	NA	NA	NA	NA	NA	NA	NA	NA	NA	NA	NA	NA	NA	NA	NA	NA	NA	NA	NA	NA
	Chromium	NS	300	NA	NA	NA	NA	NA	NA	NA	NA	NA	NA	NA	NA	NA	NA	NA	NA	NA	NA	NA	NA	NA	NA	NA	NA	NA
	Lead	NS	10	NA	NA	NA	NA	NA	NA	NA	NA	NA	NA	NA	NA	NA	NA	NA	NA	NA	NA	NA	NA	NA	NA	NA	NA	NA
	Mercury	NS	20	NA	NA	NA	NA	NA	NA	NA	NA	NA	NA	NA	NA	NA	NA	NA	NA	NA	NA	NA	NA	NA	NA	NA	NA	NA
	Nickel	NS	200	NA	NA	NA	NA	NA	NA	NA	NA	NA	NA	NA	NA	NA	NA	NA	NA	NA	NA	NA	NA	NA	NA	NA	NA	NA
	Selenium	NS	100	NA	NA	NA	NA	NA	NA	NA	NA	NA	NA	NA	NA	NA	NA	NA	NA	NA	NA	NA	NA	NA	NA	NA	NA	NA
	Silver	NS	7	NA	NA	NA	NA	NA	NA	NA	NA	NA	NA	NA	NA	NA	NA	NA	NA	NA	NA	NA	NA	NA	NA	NA	NA	NA
	Thallium	NS	3,000	NA	NA	NA	NA	NA	NA	NA	NA	NA	NA	NA	NA	NA	NA	NA	NA	NA	NA	NA	NA	NA	NA	NA	NA	NA
	Vanadium	NS	4,000	NA	NA	NA	NA	NA	NA	NA	NA	NA	NA	NA	NA	NA	NA	NA	NA	NA	NA	NA	NA	NA	NA	NA	NA	NA
	Zinc	NS	900	NA	NA	NA	NA	NA	NA	NA	NA	NA	NA	NA	NA	NA	NA	NA	NA	NA	NA	NA	NA	NA	NA	NA	NA	NA
General Chemistry																												
(ug/L)	Nitrogen, Nitrate	NS	NS	NA	NA	NA	NA	NA	NA	NA	NA	NA	NA	NA	NA	NA	NA	NA	NA	NA	NA	NA	NA	NA	NA	NA	NA	NA
	Sulfate	NS	NS	NA	NA	NA	NA	NA	NA	NA	NA	NA	NA	NA	NA	NA	NA	NA	NA	NA	NA	NA	NA	NA	NA	NA	NA	NA
	Total Organic Carbon	NS	NS	NA	NA	NA	NA	NA	NA	NA	NA	NA	NA	NA	NA	NA	NA	NA	NA	NA	NA	NA	NA	NA	NA	NA	NA	NA

Notes:
ug/L - micrograms per liter.
B - Compound detected in associated method blank
J - Estimated value.
NA - Sample not analyzed for the listed analyte.
N/A - Not applicable.
NS - No MassDEP standards exist for this compound.
U - Compound was not detected at specified quantitation limit.
Values in **Bold** indicate the compound was detected.
VOCs - Volatile Organic Compounds.
PAHs - Polynuclear Aromatic Hydrocarbons.
PCBs - Polychlorinated Biphenyls.
(1) - MassDEP Method 1 standards for C9-C10 aromatic hydrocarbons used.
(2) - MassDEP Method 1 standards for 1,3-Dichloropropene used.
^ - 0.45 micron filtration done in field; 0.20 and 2.0 micron filtration performed in lab.
* - Sample collected on 4/10/2012 for PCB analysis was broken and was recollected on 4/18/2012
** - Lab filtered sample using a 2.0 micron filter and then filtered a second time using a 0.20 micr

Table 2
Summary of Analytical Results for Groundwater Samples -- 2008 through 2014
New Bedford High School
New Bedford, Massachusetts

Analysis	Analyte		Sample ID:	MW-40			MW-41										MW-42R											
		Filter Size (micron)^3		N/A	N/A	0.45	N/A	N/A	N/A	N/A	2.0	0.45	0.20	N/A	0.45	0.20	N/A	N/A	N/A	N/A	0.45	0.20	N/A	N/A	0.45	0.45	0.20	0.20
		Sample Date:		7/3/2012	1/17/2014	1/17/2014	7/3/2012	7/3/2012	12/13/2012	1/17/2014	1/17/2014	1/17/2014	1/17/2014	2/21/2014	2/21/2014	2/21/2014	9/18/2012	10/18/2012	12/14/2012	2/14/2014	2/14/2014	2/14/2014	2/21/2014	2/21/2014	2/21/2014	2/21/2014	2/21/2014	2/21/2014
		GW-2	GW-3					Field Dup					**											Field Dup		Field Dup		Field Dup
VOCs (ug/L)	Methylene Chloride	2,000	50,000	2.0 U	2.0 U	NA	2.0 U	2.0 U	2.0 U	2.0 U	NA	NA	NA	2.0 U	NA	NA	40 U	20 U	20 U	2.0 U	NA	NA	2.0 U	2.0 U	NA	NA	NA	NA
	1,1-Dichloroethane	2,000	20,000	1.0 U	1.0 U	NA	1.0 U	1.0 U	1.0 U	1.0 U	NA	NA	NA	1.0 U	NA	NA	20 U	10 U	10 U	1.0 U	NA	NA	1.0 U	1.0 U	NA	NA	NA	NA
	Chloroform	50	20,000	1.0 U	1.0 U	NA	1.0 U	1.0 U	1.0 U	1.0 U	NA	NA	NA	1.0 U	NA	NA	20 U	10 U	10 U	1.0 U	NA	NA	1.0 U	1.0 U	NA	NA	NA	NA
	Carbon Tetrachloride	2	5,000	1.0 U	1.0 U	NA	1.0 U	1.0 U	1.0 U	1.0 U	NA	NA	NA	1.0 U	NA	NA	20 U	10 U	10 U	1.0 U	NA	NA	1.0 U	1.0 U	NA	NA	NA	NA
	1,2-Dichloropropane	3	50,000	1.0 U	1.0 U	NA	1.0 U	1.0 U	1.0 U	1.0 U	NA	NA	NA	1.0 U	NA	NA	20 U	10 U	10 U	1.0 U	NA	NA	1.0 U	1.0 U	NA	NA	NA	NA
	Chlorodibromomethane	20	50,000	1.0 U	1.0 U	NA	1.0 U	1.0 U	1.0 U	1.0 U	NA	NA	NA	1.0 U	NA	NA	20 U	10 U	10 U	1.0 U	NA	NA	1.0 U	1.0 U	NA	NA	NA	NA
	1,1,2-Trichloroethane	900	50,000	1.0 U	1.0 U	NA	1.0 U	1.0 U	1.0 U	1.0 U	NA	NA	NA	1.0 U	NA	NA	20 U	10 U	10 U	1.0 U	NA	NA	1.0 U	1.0 U	NA	NA	NA	NA
	Tetrachloroethylene	50	30,000	1.0 U	1.0 U	NA	1.0 U	1.0 U	1.0 U	1.0 U	NA	NA	NA	1.0 U	NA	NA	20 U	10 U	10 U	1.0 U	NA	NA	1.0 U	1.0 U	NA	NA	NA	NA
	Chlorobenzene	200	1,000	1.0 U	1.0 U	NA	1.0 U	1.0 U	1.0 U	1.0 U	NA	NA	NA	1.0 U	NA	NA	20 U	10 U	10 U	1.0 U	NA	NA	1.0 U	1.0 U	NA	NA	NA	NA
	Trichlorofluoromethane (Freon 11)	NS	NS	2.0 U	2.0 U	NA	2.0 U	2.0 U	2.0 U	2.0 U	NA	NA	NA	2.0 U	NA	NA	40 U	20 U	20 U	2.0 U	NA	NA	2.0 U	2.0 U	NA	NA	NA	NA
	1,2-Dichloroethane	5	20,000	1.0 U	1.0 U	NA	1.0 U	1.0 U	1.0 U	1.0 U	NA	NA	NA	1.0 U	NA	NA	20 U	10 U	10 U	1.0 U	NA	NA	1.0 U	1.0 U	NA	NA	NA	NA
	1,1,1-Trichloroethane	4,000	20,000	1.0 U	1.0 U	NA	1.0 U	1.0 U	1.0 U	1.0 U	NA	NA	NA	1.0 U	NA	NA	20 U	10 U	10 U	1.0 U	NA	NA	1.0 U	1.0 U	NA	NA	NA	NA
	Bromodichloromethane	6	50,000	1.0 U	1.0 U	NA	1.0 U	1.0 U	1.0 U	1.0 U	NA	NA	NA	1.0 U	NA	NA	20 U	10 U	10 U	1.0 U	NA	NA	1.0 U	1.0 U	NA	NA	NA	NA
	trans-1,3-Dichloropropene	10(2)	200(2)	0.50 U	0.50 U	NA	0.50 U	0.50 U	0.50 U	0.50 U	NA	NA	NA	0.50 U	NA	NA	10 U	5.0 U	5.0 U	0.50 U	NA	NA	0.50 U	0.50 U	NA	NA	NA	NA
	cis-1,3-Dichloropropene	10(2)	200(2)	0.50 U	0.50 U	NA	0.50 U	0.50 U	0.50 U	0.50 U	NA	NA	NA	0.50 U	NA	NA	10 U	5.0 U	5.0 U	0.50 U	NA	NA	0.50 U	0.50 U	NA	NA	NA	NA
	1,1-Dichloropropene	NS	NS	2.0 U	2.0 U	NA	2.0 U	2.0 U	2.0 U	2.0 U	NA	NA	NA	2.0 U	NA	NA	40 U	20 U	20 U	2.0 U	NA	NA	2.0 U	2.0 U	NA	NA	NA	NA
	Bromoform	700	50,000	2.0 U	2.0 U	NA	2.0 U	2.0 U	2.0 U	2.0 U	NA	NA	NA	2.0 U	NA	NA	40 U	20 U	20 U	2.0 U	NA	NA	2.0 U	2.0 U	NA	NA	NA	NA
	1,1,2,2-Tetrachloroethane	9	50,000	1.0 U	1.0 U	NA	1.0 U	1.0 U	1.0 U	1.0 U	NA	NA	NA	1.0 U	NA	NA	20 U	10 U	10 U	1.0 U	NA	NA	1.0 U	1.0 U	NA	NA	NA	NA
	Benzene	1,000	10,000	0.50 U	0.50 U	NA	0.50 U	0.50 U	0.50 U	0.50 U	NA	NA	NA	0.50 U	NA	NA	10 U	5.0 U	5.0 U	0.50 U	NA	NA	0.50 U	0.50 U	NA	NA	NA	NA
	Toluene	50,000	40,000	1.0 U	1.0 U	NA	1.0 U	1.0 U	1.0 U	1.0 U	NA	NA	NA	1.0 U	NA	NA	20 U	10 U	10 U	1.0 U	NA	NA	1.0 U	1.0 U	NA	NA	NA	NA
	Ethylbenzene	20,000	5,000	1.0 U	1.0 U	NA	1.0 U	1.0 U	1.0 U	1.0 U	NA	NA	NA	1.0 U	NA	NA	20 U	10 U	10 U	1.0 U	NA	NA	1.0 U	1.0 U	NA	NA	NA	NA
	Chloromethane	NS	NS	2.0 U	2.0 U	NA	2.0 U	2.0 U	2.0 U	2.0 U	NA	NA	NA	2.0 U	NA	NA	40 U	20 U	20 U	2.0 U	NA	NA	2.0 U	2.0 U	NA	NA	NA	NA
	Bromomethane	7	800	2.0 U	2.0 U	NA	2.0 U	2.0 U	2.0 U	2.0 U	NA	NA	NA	2.0 U	NA	NA	40 U	20 U	20 U	2.0 U	NA	NA	2.0 U	2.0 U	NA	NA	NA	NA
	Vinyl Chloride	2	50,000	**7.6**	1.0 U	NA	**1,200**	**1,200**	**84**	**5.0**	NA	NA	NA	**4.5**	NA	NA	**58**	**29**	**34**	**8.2**	NA	NA	**110**	**97**	NA	NA	NA	NA
	Chloroethane	NS	NS	2.0 U	2.0 U	NA	2.0 U	2.0 U	2.0 U	2.0 U	NA	NA	NA	2.0 U	NA	NA	40 U	20 U	20 U	2.0 U	NA	NA	2.0 U	2.0 U	NA	NA	NA	NA
	1,1-Dichloroethylene	80	30,000	1.0 U	1.0 U	NA	1.0 U	1.0 U	1.0 U	1.0 U	NA	NA	NA	1.0 U	NA	NA	20 U	10 U	10 U	1.0 U	NA	NA	1.0 U	1.0 U	NA	NA	NA	NA
	trans-1,2-Dichloroethylene	80	50,000	**12**	1.0 U	NA	**2,300**	**2,400**	**31**	**3.7**	NA	NA	NA	**3.2**	NA	NA	**250**	**180**	**160**	**2.9**	NA	NA	**30**	**32**	NA	NA	NA	NA
	Trichloroethylene	5	5,000	**13**	1.0 U	NA	**280**	**280**	**5.5**	**11**	NA	NA	NA	**6.6**	NA	NA	**150**	**80**	**59**	**14**	NA	NA	**4.0**	**4.0**	NA	NA	NA	NA
	1,2-Dichlorobenzene	8,000	2,000	1.0 U	1.0 U	NA	**5.6**	1.0 U	1.0 U	1.0 U	NA	NA	NA	1.0 U	NA	NA	20 U	10 U	10 U	1.0 U	NA	NA	1.0 U	1.0 U	NA	NA	NA	NA
	1,3-Dichlorobenzene	6,000	50,000	1.0 U	1.0 U	NA	**4.2**	**4.0**	**3.6**	1.0 U	NA	NA	NA	**1.2**	NA	NA	20 U	10 U	10 U	1.0 U	NA	NA	1.0 U	1.0 U	NA	NA	NA	NA
	1,4-Dichlorobenzene	60	8,000	1.0 U	1.0 U	NA	**4.9**	**4.8**	**2.4**	**1.1**	NA	NA	NA	**1.2**	NA	NA	**26**	**16**	**13**	1.0 U	NA	NA	**3.4**	**3.6**	NA	NA	NA	NA
	Methyl tert-Butyl Ether (MTBE)	50,000	50,000	2.0 U	2.0 U	NA	2.0 U	2.0 U	2.0 U	2.0 U	NA	NA	NA	2.0 U	NA	NA	40 U	20 U	20 U	2.0 U	NA	NA	2.0 U	2.0 U	NA	NA	NA	NA
	m+p Xylene	2	50,000	2.0 U	2.0 U	NA	2.0 U	2.0 U	2.0 U	2.0 U	NA	NA	NA	2.0 U	NA	NA	40 U	20 U	20 U	2.0 U	NA	NA	2.0 U	2.0 U	NA	NA	NA	NA
	o-Xylene	2	50,000	1.0 U	1.0 U	NA	1.0 U	1.0 U	1.0 U	1.0 U	NA	NA	NA	1.0 U	NA	NA	20 U	10 U	10 U	1.0 U	NA	NA	1.0 U	1.0 U	NA	NA	NA	NA
	cis-1,2-Dichloroethylene	20	50,000	**32**	1.0 U	NA	**6,600**	**6,800**	**82**	**13**	NA	NA	NA	**13**	NA	NA	**1,100**	**710**	**530**	**5.6**	NA	NA	**48**	**49**	NA	NA	NA	NA
	Dibromomethane	NS	NS	2.0 U	2.0 U	NA	2.0 U	2.0 U	2.0 U	2.0 U	NA	NA	NA	2.0 U	NA	NA	40 U	20 U	20 U	2.0 U	NA	NA	2.0 U	2.0 U	NA	NA	NA	NA
	1,2,3-Trichloropropane	NS	NS	2.0 U	2.0 U	NA	2.0 U	2.0 U	2.0 U	2.0 U	NA	NA	NA	2.0 U	NA	NA	40 U	20 U	20 U	2.0 U	NA	NA	2.0 U	2.0 U	NA	NA	NA	NA
	Styrene	100	6,000	1.0 U	1.0 U	NA	1.0 U	1.0 U	1.0 U	1.0 U	NA	NA	NA	1.0 U	NA	NA	20 U	10 U	10 U	1.0 U	NA	NA	1.0 U	1.0 U	NA	NA	NA	NA
	Dichlorodifluoromethane (Freon 12)	NS	NS	2.0 U	2.0 U	NA	2.0 U	2.0 U	2.0 U	2.0 U	NA	NA	NA	2.0 U	NA	NA	40 U	20 U	20 U	2.0 U	NA	NA	2.0 U	2.0 U	NA	NA	NA	NA
	Acetone	50,000	50,000	5.0 U	5.0 U	NA	5.0 U	5.0 U	5.0 U	5.0 U	NA	NA	NA	5.0 U	NA	NA	100 U	50 U	50 U	5.0 U	NA	NA	5.0 U	5.0 U	NA	NA	NA	NA
	Carbon Disulfide	NS	NS	2.0 U	2.0 U	NA	2.0 U	2.0 U	2.0 U	2.0 U	NA	NA	NA	2.0 U	NA	NA	40 U	20 U	20 U	2.0 U	NA	NA	2.0 U	2.0 U	NA	NA	NA	NA
	2-Butanone (MEK)	50,000	50,000	5.0 U	5.0 U	NA	5.0 U	5.0 U	5.0 U	5.0 U	NA	NA	NA	5.0 U	NA	NA	100 U	50 U	50 U	5.0 U	NA	NA	5.0 U	5.0 U	NA	NA	NA	NA
	4-Methyl-2-pentanone (MIBK)	50,000	50,000	5.0 U	5.0 U	NA	5.0 U	5.0 U	5.0 U	5.0 U	NA	NA	NA	5.0 U	NA	NA	100 U	50 U	50 U	5.0 U	NA	NA	5.0 U	5.0 U	NA	NA	NA	NA
	2-Hexanone (MBK)	NS	NS	5.0 U	5.0 U	NA	5.0 U	5.0 U	5.0 U	5.0 U	NA	NA	NA	5.0 U	NA	NA	100 U	50 U	50 U	5.0 U	NA	NA	5.0 U	5.0 U	NA	NA	NA	NA
	Bromochloromethane	NS	NS	2.0 U	2.0 U	NA	2.0 U	2.0 U	2.0 U	2.0 U	NA	NA	NA	2.0 U	NA	NA	40 U	20 U	20 U	2.0 U	NA	NA	2.0 U	2.0 U	NA	NA	NA	NA
	Tetrahydrofuran	NS	NS	5.0 U	2.0 U	NA	5.0 U	5.0 U	5.0 U	2.0 U	NA	NA	NA	2.0 U	NA	NA	100 U	50 U	50 U	2.0 U	NA	NA	2.0 U	2.0 U	NA	NA	NA	NA
	2,2-Dichloropropane	NS	NS	2.0 U	2.0 U	NA	2.0 U	2.0 U	2.0 U	2.0 U	NA	NA	NA	2.0 U	NA	NA	40 U	20 U	20 U	2.0 U	NA	NA	2.0 U	2.0 U	NA	NA	NA	NA
	1,2-Dibromoethane (EDB)	2	50,000	2.0 U	2.0 U	NA	2.0 U	2.0 U	2.0 U	2.0 U	NA	NA	NA	2.0 U	NA	NA	40 U	20 U	20 U	2.0 U	NA	NA	2.0 U	2.0 U	NA	NA	NA	NA
	1,3-Dichloropropane	NS	NS	2.0 U	2.0 U	NA	2.0 U	2.0 U	2.0 U	2.0 U	NA	NA	NA	2.0 U	NA	NA	40 U	20 U	20 U	2.0 U	NA	NA	2.0 U	2.0 U	NA	NA	NA	NA
	1,1,1,2-Tetrachloroethane	10	50,000	1.0 U	1.0 U	NA	1.0 U	1.0 U	1.0 U	1.0 U	NA	NA	NA	1.0 U	NA	NA	20 U	10 U	10 U	1.0 U	NA	NA	1.0 U	1.0 U	NA	NA	NA	NA
	Bromobenzene	NS	NS	2.0 U	2.0 U	NA	2.0 U	2.0 U	2.0 U	2.0 U	NA	NA	NA	2.0 U	NA	NA	40 U	20 U	20 U	2.0 U	NA	NA	2.0 U	2.0 U	NA	NA	NA	NA
	n-Butylbenzene	4,000(1)	50,000(1)	2.0 U	2.0 U	NA	2.0 U	2.0 U	2.0 U	2.0 U	NA	NA	NA	2.0 U	NA	NA	40 U	20 U	20 U	2.0 U	NA	NA	2.0 U	2.0 U	NA	NA	NA	NA
	sec-Butylbenzene	4,000(1)	50,000(1)	2.0 U	2.0 U	NA	2.0 U	2.0 U	2.0 U	2.0 U	NA	NA	NA	2.0 U	NA	NA	40 U	20 U	20 U	2.0 U	NA	NA	2.0 U	2.0 U	NA	NA	NA	NA
	tert-Butylbenzene	4,000(1)	50,000(1)	2.0 U	2.0 U	NA	2.0 U	2.0 U	2.0 U	2.0 U	NA	NA	NA	2.0 U	NA	NA	40 U	20 U	20 U	2.0 U	NA	NA	2.0 U	2.0 U	NA	NA	NA	NA
	2-Chlorotoluene	NS	NS	2.0 U	2.0 U	NA	2.0 U	2.0 U	2.0 U	2.0 U	NA	NA	NA	2.0 U	NA	NA	40 U	20 U	20 U	2.0 U	NA	NA	2.0 U	2.0 U	NA	NA	NA	NA
	4-Chlorotoluene	NS	NS	2.0 U	2.0 U	NA	2.0 U	2.0 U	2.0 U	2.0 U	NA	NA	NA	2.0 U	NA	NA	40 U	20 U	20 U	2.0 U	NA	NA	2.0 U	2.0 U	NA	NA	NA	NA
	1,2-Dibromo-3-chloropropane (DBCP)	NS	NS	2.0 U	2.0 U	NA	2.0 U	2.0 U	2.0 U	2.0 U	NA	NA	NA	2.0 U	NA	NA	40 U	20 U	20 U	2.0 U	NA	NA	2.0 U	2.0 U	NA	NA	NA	NA
	Hexachlorobutadiene	50	3,000	0.60 U	0.60 U	NA	0.60 U	0.60 U	0.60 U	0.60 U	NA	NA	NA	0.60 U	NA	NA	12 U	6.0 U	6.0 U	0.60 U	NA	NA	0.60 U	0.60 U	NA	NA	NA	NA
	Isopropylbenzene (Cumene)	4,000(1)	50,000(1)	2.0 U	2.0 U	NA	2.0 U	2.0 U	2.0 U	2.0 U	NA	NA	NA	2.0 U	NA	NA	40 U	20 U	20 U	2.0 U	NA	NA	2.0 U	2.0 U	NA	NA	NA	NA
	p-Isopropyltoluene (p-Cymene)	4,000(1)	50,000(1)	2.0 U	2.0 U	NA	2.0 U	2.0 U	2.0 U	2.0 U	NA	NA	NA	2.0 U	NA	NA	40 U	20 U	20 U	2.0 U	NA	NA	2.0 U	2.0 U	NA	NA	NA	NA
	Naphthalene	700	20,000	2.0 U	2.0 U	NA	2.0 U	2.0 U	2.0 U	2.0 U	NA	NA	NA	2.0 U	NA	NA	40 U	20 U	20 U	2.0 U	NA	NA	2.0 U	2.0 U	NA	NA	NA	NA
	n-Propylbenzene	4,000(1)	50,000(1)	2.0 U	2.0 U	NA	2.0 U	2.0 U	2.0 U	2.0 U	NA	NA	NA	2.0 U	NA	NA	40 U	20 U	20 U	2.0 U	NA	NA	2.0 U	2.0 U	NA	NA	NA	NA
	1,2,3-Trichlorobenzene	NS	NS	2.0 U	2.0 U	NA	2.0 U	2.0 U	2.0 U	2.0 U	NA	NA	NA	2.0 U	NA	NA	40 U	20 U	20 U	2.0 U	NA	NA	2.0 U	2.0 U	NA	NA	NA	NA
	1,2,4-Trichlorobenzene	200	50,000	2.0 U	2.0 U	NA	**4.7**	**4.4**	**12**	**3.4**	NA	NA	NA	**5.0**	NA	NA	40 U	20 U	20 U	2.0 U	NA	NA	2.0 U	2.0 U	NA	NA	NA	NA
	1,3,5-Trimethylbenzene	4,000(1)	50,000(1)	2.0 U	2.0 U	NA	2.0 U	2.0 U	2.0 U	2.0 U	NA	NA	NA	2.0 U	NA	NA	40 U	20 U	20 U	2.0 U	NA	NA	2.0 U	2.0 U	NA	NA	NA	NA
	1,2,4-Trimethylbenzene	4,000(1)	50,000(1)	2.0 U	2.0 U	NA	2.0 U	2.0 U	2.0 U	2.0 U	NA	NA	NA	2.0 U	NA	NA	40 U	20 U	20 U	2.0 U	NA	NA	2.0 U	2.0 U	NA	NA	NA	NA
	Diethyl Ether	NS	NS	2.0 U	2.0 U	NA	2.0 U	2.0 U	2.0 U	2.0 U	NA	NA	NA	2.0 U	NA	NA	40 U	20 U	20 U	2.0 U	NA	NA	2.0 U	2.0 U	NA	NA	NA	NA
	Diisopropyl Ether (DIPE)	NS	NS	2.0 U	2.0 U	NA	2.0 U	2.0 U	2.0 U	2.0 U	NA	NA	NA	2.0 U	NA	NA	40 U	20 U	20 U	2.0 U	NA	NA	2.0 U	2.0 U	NA	NA	NA	NA
	tert-Butyl Ethyl Ether (TBEE)	NS	NS	2.0 U	2.0 U	NA	2.0 U	2.0 U	2.0 U	2.0 U	NA	NA	NA	2.0 U	NA	NA	40 U	20 U	20 U	2.0 U	NA	NA	2.0 U	2.0 U	NA	NA	NA	NA
	tert-Amyl Methyl Ether (TAME)	NS	NS	2.0 U	2.0 U	NA	2.0 U	2.0 U	2.0 U	2.0 U	NA	NA	NA	2.0 U	NA	NA	40 U	20 U	20 U	2.0 U	NA	NA	2.0 U	2.0 U	NA	NA	NA	NA
	1,4-Dioxane	6,000	50,000	250 U	250 U	NA	250 U	250 U	250 U	250 U	NA	NA	NA	250 U	NA	NA	5,000 U	2,500 U	2,500 U	250 U	NA	NA	250 U	250 U	NA	NA	NA	NA

Table 2
Summary of Analytical Results for Groundwater Samples -- 2008 through 2014
New Bedford High School
New Bedford, Massachusetts

Analysis	Analyte		Sample ID:	MW-40			MW-41										MW-42R											
			Filter Size (micron)^	N/A	N/A	0.45	N/A	N/A	N/A	N/A	2.0	0.45	0.20	N/A	0.45	0.20	N/A	N/A	N/A	N/A	0.45	0.20	N/A	N/A	0.45	0.45	0.20	0.20
			Sample Date:	7/3/2012	1/17/2014	1/17/2014	7/3/2012	7/3/2012	12/13/2012	1/17/2014	1/17/2014	1/17/2014	1/17/2014	2/21/2014	2/21/2014	2/21/2014	9/18/2012	10/18/2012	12/14/2012	2/14/2014	2/14/2014	2/14/2014	2/21/2014	2/21/2014	2/21/2014	2/21/2014	2/21/2014	2/21/2014
		GW-2	GW-3					Field Dup					**											Field Dup		Field Dup		Field Dup
PAHs																												
(ug/L)	Acenaphthene	NS	10,000	NA	NA	NA	NA	NA	NA	NA	NA	NA	NA	NA	NA	NA	NA	NA	NA	NA	NA	NA	NA	NA	NA	NA	NA	NA
	Acenaphthylene	10,000	40	NA	NA	NA	NA	NA	NA	NA	NA	NA	NA	NA	NA	NA	NA	NA	NA	NA	NA	NA	NA	NA	NA	NA	NA	NA
	Anthracene	NS	30	NA	NA	NA	NA	NA	NA	NA	NA	NA	NA	NA	NA	NA	NA	NA	NA	NA	NA	NA	NA	NA	NA	NA	NA	NA
	Benzo(a)anthracene	NS	1,000	NA	NA	NA	NA	NA	NA	NA	NA	NA	NA	NA	NA	NA	NA	NA	NA	NA	NA	NA	NA	NA	NA	NA	NA	NA
	Benzo(a)pyrene	NS	500	NA	NA	NA	NA	NA	NA	NA	NA	NA	NA	NA	NA	NA	NA	NA	NA	NA	NA	NA	NA	NA	NA	NA	NA	NA
	Benzo(b)fluoranthene	NS	400	NA	NA	NA	NA	NA	NA	NA	NA	NA	NA	NA	NA	NA	NA	NA	NA	NA	NA	NA	NA	NA	NA	NA	NA	NA
	Benzo(g,h,i)perylene	NS	20	NA	NA	NA	NA	NA	NA	NA	NA	NA	NA	NA	NA	NA	NA	NA	NA	NA	NA	NA	NA	NA	NA	NA	NA	NA
	Benzo(k)fluoranthene	NS	100	NA	NA	NA	NA	NA	NA	NA	NA	NA	NA	NA	NA	NA	NA	NA	NA	NA	NA	NA	NA	NA	NA	NA	NA	NA
	Chrysene	NS	70	NA	NA	NA	NA	NA	NA	NA	NA	NA	NA	NA	NA	NA	NA	NA	NA	NA	NA	NA	NA	NA	NA	NA	NA	NA
	Dibenz(a,h)anthracene	NS	40	NA	NA	NA	NA	NA	NA	NA	NA	NA	NA	NA	NA	NA	NA	NA	NA	NA	NA	NA	NA	NA	NA	NA	NA	NA
	Fluoranthene	NS	200	NA	NA	NA	NA	NA	NA	NA	NA	NA	NA	NA	NA	NA	NA	NA	NA	NA	NA	NA	NA	NA	NA	NA	NA	NA
	Fluorene	NS	40	NA	NA	NA	NA	NA	NA	NA	NA	NA	NA	NA	NA	NA	NA	NA	NA	NA	NA	NA	NA	NA	NA	NA	NA	NA
	Indeno(1,2,3-cd)pyrene	NS	100	NA	NA	NA	NA	NA	NA	NA	NA	NA	NA	NA	NA	NA	NA	NA	NA	NA	NA	NA	NA	NA	NA	NA	NA	NA
	2-Methylnaphthalene	2,000	20,000	NA	NA	NA	NA	NA	NA	NA	NA	NA	NA	NA	NA	NA	NA	NA	NA	NA	NA	NA	NA	NA	NA	NA	NA	NA
	Naphthalene	700	20,000	NA	NA	NA	NA	NA	NA	NA	NA	NA	NA	NA	NA	NA	NA	NA	NA	NA	NA	NA	NA	NA	NA	NA	NA	NA
	Phenanthrene	NS	10,000	NA	NA	NA	NA	NA	NA	NA	NA	NA	NA	NA	NA	NA	NA	NA	NA	NA	NA	NA	NA	NA	NA	NA	NA	NA
	Pyrene	NS	20	NA	NA	NA	NA	NA	NA	NA	NA	NA	NA	NA	NA	NA	NA	NA	NA	NA	NA	NA	NA	NA	NA	NA	NA	NA
PCBs																												
(ug/L)	Aroclor 1016	5	10	0.25 U	0.250 U	0.250 U	0.25 U	0.50 U	1.0 U	NA	0.250 U	0.250 U	0.250 U	0.500 U	0.250 U	0.250 U	1.25 U	1.25 U	1.0 U	0.500 U	0.250 U	0.250 U	0.250 U	0.500 U	0.250 U	0.250 U	0.250 U	0.250 U
	Aroclor 1221	5	10	0.25 U	0.250 U	0.250 U	0.25 U	0.50 U	1.0 U	NA	0.250 U	0.250 U	0.250 U	0.500 U	0.250 U	0.250 U	1.25 U	1.25 U	1.0 U	0.500 U	0.250 U	0.250 U	0.250 U	0.500 U	0.250 U	0.250 U	0.250 U	0.250 U
	Aroclor 1232	5	10	0.25 U	0.250 U	0.250 U	0.25 U	0.50 U	1.0 U	NA	0.250 U	0.250 U	0.250 U	0.500 U	0.250 U	0.250 U	1.25 U	1.25 U	1.0 U	0.500 U	0.250 U	0.250 U	0.250 U	0.500 U	0.250 U	0.250 U	0.250 U	0.250 U
	Aroclor 1242	5	10	0.25 U	0.250 U	0.250 U	0.25 U	0.50 U	**6.06**	NA	0.250 U	0.250 U	0.250 U	0.500 U	0.250 U	0.250 U	1.25 U	1.25 U	**9.06**	0.500 U	0.250 U	0.250 U	0.250 U	0.500 U	0.250 U	0.250 U	0.250 U	0.250 U
	Aroclor 1248	5	10	0.25 U	0.250 U	0.250 U	0.25 U	0.50 U	1.0 U	NA	0.250 U	0.250 U	0.250 U	0.500 U	0.250 U	0.250 U	1.25 U	1.25 U	1.0 U	0.500 U	0.250 U	0.250 U	0.250 U	0.500 U	0.250 U	0.250 U	0.250 U	0.250 U
	Aroclor 1254	5	10	0.25 U	0.250 U	0.250 U	**5.51**	**6.41**	**9.69**	NA	**3.25**	**1.59**	0.250 U	**5.27**	0.250 U	0.250 U	**15.7**	**12.8**	**16.6**	**6.66**	0.250 U	0.250 U	**5.29**	**6.34**	0.250 U	0.250 U	0.250 U	0.250 U
	Aroclor 1260	5	10	0.25 U	0.250 U	0.250 U	0.25 U	0.50 U	1.0 U	NA	0.250 U	0.250 U	0.250 U	0.500 U	0.250 U	0.250 U	1.25 U	1.25 U	1.0 U	0.500 U	0.250 U	0.250 U	0.250 U	0.500 U	0.250 U	0.250 U	0.250 U	0.250 U
	Aroclor 1262	5	10	0.25 U	0.250 U	0.250 U	0.25 U	0.50 U	1.0 U	NA	0.250 U	0.250 U	0.250 U	0.500 U	0.250 U	0.250 U	1.25 U	1.25 U	1.0 U	0.500 U	0.250 U	0.250 U	0.250 U	0.500 U	0.250 U	0.250 U	0.250 U	0.250 U
	Aroclor 1268	5	10	0.25 U	0.250 U	0.250 U	0.25 U	0.50 U	1.0 U	NA	0.250 U	0.250 U	0.250 U	0.500 U	0.250 U	0.250 U	1.25 U	1.25 U	1.0 U	0.500 U	0.250 U	0.250 U	0.250 U	0.500 U	0.250 U	0.250 U	0.250 U	0.250 U
	Total PCBs	5	10	0.25 U	0.250 U	0.250 U	**5.51**	**6.41**	**15.75**	NA	**3.25**	**1.59**	0.250 U	**5.27**	0.250 U	0.250 U	**15.7**	**12.8**	**25.66**	**6.66**	0.250 U	0.250 U	**5.29**	**6.34**	0.250 U	0.250 U	0.250 U	0.250 U
Total Petroleum Hydrocarbons																												
(ug/L)	Total Petroleum Hydrocarbons (C9-C44	5,000	5,000	NA	NA	NA	NA	NA	NA	NA	NA	NA	NA	NA	NA	NA	NA	NA	NA	NA	NA	NA	NA	NA	NA	NA	NA	NA
Metals, total																												
(ug/L)	Antimony	NS	8,000	NA	NA	NA	NA	NA	NA	NA	NA	NA	NA	NA	NA	NA	NA	NA	NA	NA	NA	NA	NA	NA	NA	NA	NA	NA
	Arsenic	NS	900	NA	NA	NA	NA	NA	NA	NA	NA	NA	NA	NA	NA	NA	NA	NA	NA	NA	NA	NA	NA	NA	NA	NA	NA	NA
	Barium	NS	50,000	NA	NA	NA	NA	NA	NA	NA	NA	NA	NA	NA	NA	NA	NA	NA	NA	NA	NA	NA	NA	NA	NA	NA	NA	NA
	Beryllium	NS	200	NA	NA	NA	NA	NA	NA	NA	NA	NA	NA	NA	NA	NA	NA	NA	NA	NA	NA	NA	NA	NA	NA	NA	NA	NA
	Cadmium	NS	4	NA	NA	NA	NA	NA	NA	NA	NA	NA	NA	NA	NA	NA	NA	NA	NA	NA	NA	NA	NA	NA	NA	NA	NA	NA
	Chromium	NS	300	NA	NA	NA	NA	NA	NA	NA	NA	NA	NA	NA	NA	NA	NA	NA	NA	NA	NA	NA	NA	NA	NA	NA	NA	NA
	Lead	NS	10	NA	NA	NA	NA	NA	NA	NA	NA	NA	NA	NA	NA	NA	NA	NA	NA	NA	NA	NA	NA	NA	NA	NA	NA	NA
	Mercury	NS	20	NA	NA	NA	NA	NA	NA	NA	NA	NA	NA	NA	NA	NA	NA	NA	NA	NA	NA	NA	NA	NA	NA	NA	NA	NA
	Nickel	NS	200	NA	NA	NA	NA	NA	NA	NA	NA	NA	NA	NA	NA	NA	NA	NA	NA	NA	NA	NA	NA	NA	NA	NA	NA	NA
	Selenium	NS	100	NA	NA	NA	NA	NA	NA	NA	NA	NA	NA	NA	NA	NA	NA	NA	NA	NA	NA	NA	NA	NA	NA	NA	NA	NA
	Silver	NS	7	NA	NA	NA	NA	NA	NA	NA	NA	NA	NA	NA	NA	NA	NA	NA	NA	NA	NA	NA	NA	NA	NA	NA	NA	NA
	Thallium	NS	3,000	NA	NA	NA	NA	NA	NA	NA	NA	NA	NA	NA	NA	NA	NA	NA	NA	NA	NA	NA	NA	NA	NA	NA	NA	NA
	Vanadium	NS	4,000	NA	NA	NA	NA	NA	NA	NA	NA	NA	NA	NA	NA	NA	NA	NA	NA	NA	NA	NA	NA	NA	NA	NA	NA	NA
	Zinc	NS	900	NA	NA	NA	NA	NA	NA	NA	NA	NA	NA	NA	NA	NA	NA	NA	NA	NA	NA	NA	NA	NA	NA	NA	NA	NA
Metals, dissolved																												
(ug/L)	Antimony	NS	8,000	NA	NA	NA	NA	NA	NA	NA	NA	NA	NA	NA	NA	NA	NA	NA	NA	NA	NA	NA	NA	NA	NA	NA	NA	NA
	Arsenic	NS	900	NA	NA	NA	NA	NA	NA	NA	NA	NA	NA	NA	NA	NA	NA	NA	NA	NA	NA	NA	NA	NA	NA	NA	NA	NA
	Barium	NS	50,000	NA	NA	NA	NA	NA	NA	NA	NA	NA	NA	NA	NA	NA	NA	NA	NA	NA	NA	NA	NA	NA	NA	NA	NA	NA
	Beryllium	NS	200	NA	NA	NA	NA	NA	NA	NA	NA	NA	NA	NA	NA	NA	NA	NA	NA	NA	NA	NA	NA	NA	NA	NA	NA	NA
	Cadmium	NS	4	NA	NA	NA	NA	NA	NA	NA	NA	NA	NA	NA	NA	NA	NA	NA	NA	NA	NA	NA	NA	NA	NA	NA	NA	NA
	Chromium	NS	300	NA	NA	NA	NA	NA	NA	NA	NA	NA	NA	NA	NA	NA	NA	NA	NA	NA	NA	NA	NA	NA	NA	NA	NA	NA
	Lead	NS	10	NA	NA	NA	NA	NA	NA	NA	NA	NA	NA	NA	NA	NA	NA	NA	NA	NA	NA	NA	NA	NA	NA	NA	NA	NA
	Mercury	NS	20	NA	NA	NA	NA	NA	NA	NA	NA	NA	NA	NA	NA	NA	NA	NA	NA	NA	NA	NA	NA	NA	NA	NA	NA	NA
	Nickel	NS	200	NA	NA	NA	NA	NA	NA	NA	NA	NA	NA	NA	NA	NA	NA	NA	NA	NA	NA	NA	NA	NA	NA	NA	NA	NA
	Selenium	NS	100	NA	NA	NA	NA	NA	NA	NA	NA	NA	NA	NA	NA	NA	NA	NA	NA	NA	NA	NA	NA	NA	NA	NA	NA	NA
	Silver	NS	7	NA	NA	NA	NA	NA	NA	NA	NA	NA	NA	NA	NA	NA	NA	NA	NA	NA	NA	NA	NA	NA	NA	NA	NA	NA
	Thallium	NS	3,000	NA	NA	NA	NA	NA	NA	NA	NA	NA	NA	NA	NA	NA	NA	NA	NA	NA	NA	NA	NA	NA	NA	NA	NA	NA
	Vanadium	NS	4,000	NA	NA	NA	NA	NA	NA	NA	NA	NA	NA	NA	NA	NA	NA	NA	NA	NA	NA	NA	NA	NA	NA	NA	NA	NA
	Zinc	NS	900	NA	NA	NA	NA	NA	NA	NA	NA	NA	NA	NA	NA	NA	NA	NA	NA	NA	NA	NA	NA	NA	NA	NA	NA	NA
General Chemistry																												
(ug/L)	Nitrogen, Nitrate	NS	NS	NA	NA	NA	NA	NA	NA	NA	NA	NA	NA	NA	NA	NA	NA	NA	NA	NA	NA	NA	NA	NA	NA	NA	NA	NA
	Sulfate	NS	NS	NA	NA	NA	NA	NA	NA	NA	NA	NA	NA	NA	NA	NA	NA	NA	NA	NA	NA	NA	NA	NA	NA	NA	NA	NA
	Total Organic Carbon	NS	NS	NA	NA	NA	NA	NA	NA	NA	NA	NA	NA	NA	NA	NA	NA	NA	NA	NA	NA	NA	NA	NA	NA	NA	NA	NA

Notes:
ug/L - micrograms per liter.
B - Compound detected in associated method blank
J - Estimated value.
NA - Sample not analyzed for the listed analyte.
N/A - Not applicable.
NS - No MassDEP standards exist for this compound.
U - Compound was not detected at specified quantitation limit.
Values in **Bold** indicate the compound was detected.
VOCs - Volatile Organic Compounds.
PAHs - Polynuclear Aromatic Hydrocarbons.
PCBs - Polychlorinated Biphenyls.
(1) - MassDEP Method 1 standards for C9-C10 aromatic hydrocarbons used.
(2) - MassDEP Method 1 standards for 1,3-Dichloropropene used.
^ - 0.45 micron filtration done in field; 0.20 and 2.0 micron filtration performed in lab.
* - Sample collected on 4/10/2012 for PCB analysis was broken and was recollected on 4/18/2012
** - Lab filtered sample using a 2.0 micron filter and then filtered a second time using a 0.20 micr

Table 2
Summary of Analytical Results for Groundwater Samples -- 2008 through 2014
New Bedford High School
New Bedford, Massachusetts

Analysis	Analyte	Sample ID:		MW-HH-13			MW-HRC-33		
		Filter Size (micron)^2		N/A	N/A	N/A	N/A	N/A	N/A
		Sample Date:		4/23/2009	4/23/2009	2/18/2010	4/23/2009	4/23/2009	2/17/2010
		GW-2	GW-3		Field Dup			Field Dup	
VOCs									
(ug/L)	Methylene Chloride	2,000	50,000	NA	NA	5.0 U	NA	NA	5.0 U
	1,1-Dichloroethane	2,000	20,000	NA	NA	1.0 U	NA	NA	1.0 U
	Chloroform	50	20,000	NA	NA	1.0 U	NA	NA	1.0 U
	Carbon Tetrachloride	2	5,000	NA	NA	1.0 U	NA	NA	1.0 U
	1,2-Dichloropropane	3	50,000	NA	NA	1.0 U	NA	NA	1.0 U
	Chlorodibromomethane	20	50,000	NA	NA	1.0 U	NA	NA	1.0 U
	1,1,2-Trichloroethane	900	50,000	NA	NA	1.0 U	NA	NA	1.0 U
	Tetrachloroethylene	50	30,000	NA	NA	1.0 U	NA	NA	1.0 U
	Chlorobenzene	200	1,000	NA	NA	1.0 U	NA	NA	1.0 U
	Trichlorofluoromethane (Freon 11)	NS	NS	NA	NA	2.0 U	NA	NA	2.0 U
	1,2-Dichloroethane	5	20,000	NA	NA	1.0 U	NA	NA	1.0 U
	1,1,1-Trichloroethane	4,000	20,000	NA	NA	1.0 U	NA	NA	1.0 U
	Bromodichloromethane	6	50,000	NA	NA	1.0 U	NA	NA	1.0 U
	trans-1,3-Dichloropropene	10(2)	200(2)	NA	NA	0.50 U	NA	NA	0.50 U
	cis-1,3-Dichloropropene	10(2)	200(2)	NA	NA	0.50 U	NA	NA	0.50 U
	1,1-Dichloropropene	NS	NS	NA	NA	2.0 U	NA	NA	2.0 U
	Bromoform	700	50,000	NA	NA	2.0 U	NA	NA	2.0 U
	1,1,2,2-Tetrachloroethane	9	50,000	NA	NA	1.0 U	NA	NA	1.0 U
	Benzene	1,000	10,000	NA	NA	1.0 U	NA	NA	1.0 U
	Toluene	50,000	40,000	NA	NA	1.0 U	NA	NA	1.0 U
	Ethylbenzene	20,000	5,000	NA	NA	1.0 U	NA	NA	1.0 U
	Chloromethane	NS	NS	NA	NA	2.0 U	NA	NA	2.0 U
	Bromomethane	7	800	NA	NA	5.0 U	NA	NA	5.0 U
	Vinyl Chloride	2	50,000	NA	NA	1.0 U	NA	NA	1.0 U
	Chloroethane	NS	NS	NA	NA	2.0 U	NA	NA	2.0 U
	1,1-Dichloroethylene	80	30,000	NA	NA	1.0 U	NA	NA	1.0 U
	trans-1,2-Dichloroethylene	80	50,000	NA	NA	1.0 U	NA	NA	1.0 U
	Trichloroethylene	5	5,000	NA	NA	1.0 U	NA	NA	1.0 U
	1,2-Dichlorobenzene	8,000	2,000	NA	NA	1.0 U	NA	NA	1.0 U
	1,3-Dichlorobenzene	6,000	50,000	NA	NA	1.0 U	NA	NA	1.0 U
	1,4-Dichlorobenzene	60	8,000	NA	NA	1.0 U	NA	NA	1.0 U
	Methyl tert-Butyl Ether (MTBE)	50,000	50,000	NA	NA	2.0 U	NA	NA	2.0 U
	m+p Xylene	2	50,000	NA	NA	2.0 U	NA	NA	2.0 U
	o-Xylene	2	50,000	NA	NA	1.0 U	NA	NA	1.0 U
	cis-1,2-Dichloroethylene	20	50,000	NA	NA	1.0 U	NA	NA	1.0 U
	Dibromomethane	NS	NS	NA	NA	2.0 U	NA	NA	2.0 U
	1,2,3-Trichloropropane	NS	NS	NA	NA	2.0 U	NA	NA	2.0 U
	Styrene	100	6,000	NA	NA	1.0 U	NA	NA	1.0 U
	Dichlorodifluoromethane (Freon 12)	NS	NS	NA	NA	2.0 U	NA	NA	2.0 U
	Acetone	50,000	50,000	NA	NA	5.0 U	NA	NA	5.0 U
	Carbon Disulfide	NS	NS	NA	NA	2.0 U	NA	NA	2.0 U
	2-Butanone (MEK)	50,000	50,000	NA	NA	5.0 U	NA	NA	5.0 U
	4-Methyl-2-pentanone (MIBK)	50,000	50,000	NA	NA	5.0 U	NA	NA	5.0 U
	2-Hexanone (MBK)	NS	NS	NA	NA	5.0 U	NA	NA	5.0 U
	Bromochloromethane	NS	NS	NA	NA	2.0 U	NA	NA	2.0 U
	Tetrahydrofuran	NS	NS	NA	NA	10 U	NA	NA	10 U
	2,2-Dichloropropane	NS	NS	NA	NA	2.0 U	NA	NA	2.0 U
	1,2-Dibromoethane (EDB)	2	50,000	NA	NA	2.0 U	NA	NA	2.0 U
	1,3-Dichloropropane	NS	NS	NA	NA	2.0 U	NA	NA	2.0 U
	1,1,1,2-Tetrachloroethane	10	50,000	NA	NA	1.0 U	NA	NA	1.0 U
	Bromobenzene	NS	NS	NA	NA	2.0 U	NA	NA	2.0 U
	n-Butylbenzene	4,000(1)	50,000(1)	NA	NA	2.0 U	NA	NA	2.0 U
	sec-Butylbenzene	4,000(1)	50,000(1)	NA	NA	2.0 U	NA	NA	2.0 U
	tert-Butylbenzene	4,000(1)	50,000(1)	NA	NA	2.0 U	NA	NA	2.0 U
	2-Chlorotoluene	NS	NS	NA	NA	2.0 U	NA	NA	2.0 U
	4-Chlorotoluene	NS	NS	NA	NA	2.0 U	NA	NA	2.0 U
	1,2-Dibromo-3-chloropropane (DBCP)	NS	NS	NA	NA	5.0 U	NA	NA	5.0 U
	Hexachlorobutadiene	50	3,000	NA	NA	0.60 U	NA	NA	0.60 U
	Isopropylbenzene (Cumene)	4,000(1)	50,000(1)	NA	NA	2.0 U	NA	NA	2.0 U
	p-Isopropyltoluene (p-Cymene)	4,000(1)	50,000(1)	NA	NA	2.0 U	NA	NA	2.0 U
	Naphthalene	700	20,000	NA	NA	5.0 U	NA	NA	5.0 U
	n-Propylbenzene	4,000(1)	50,000(1)	NA	NA	2.0 U	NA	NA	2.0 U
	1,2,3-Trichlorobenzene	NS	NS	NA	NA	2.0 U	NA	NA	2.0 U
	1,2,4-Trichlorobenzene	200	50,000	NA	NA	2.0 U	NA	NA	2.0 U
	1,3,5-Trimethylbenzene	4,000(1)	50,000(1)	NA	NA	2.0 U	NA	NA	2.0 U
	1,2,4-Trimethylbenzene	4,000(1)	50,000(1)	NA	NA	2.0 U	NA	NA	2.0 U
	Diethyl Ether	NS	NS	NA	NA	2.0 U	NA	NA	2.0 U
	Diisopropyl Ether (DIPE)	NS	NS	NA	NA	2.0 U	NA	NA	2.0 U
	tert-Butyl Ethyl Ether (TBEE)	NS	NS	NA	NA	2.0 U	NA	NA	2.0 U
	tert-Amyl Methyl Ether (TAME)	NS	NS	NA	NA	2.0 U	NA	NA	2.0 U
	1,4-Dioxane	6,000	50,000	NA	NA	250 U	NA	NA	250 U

Table 2
Summary of Analytical Results for Groundwater Samples -- 2008 through 2014
New Bedford High School
New Bedford, Massachusetts

Analysis	Analyte	Sample ID:		MW-HH-13			MW-HRC-33		
		Filter Size (micron)^:		N/A	N/A	N/A	N/A	N/A	N/A
		Sample Date:		4/23/2009	4/23/2009	2/18/2010	4/23/2009	4/23/2009	2/17/2010
		GW-2	GW-3		Field Dup			Field Dup	
PAHs									
(ug/L)	Acenaphthene	NS	10,000	0.30 U	0.30 U	NA	0.30 U	NA	NA
	Acenaphthylene	10,000	40	0.30 U	0.30 U	NA	0.30 U	NA	NA
	Anthracene	NS	30	0.20 U	0.20 U	NA	0.20 U	NA	NA
	Benzo(a)anthracene	NS	1,000	0.05 U	0.05 U	NA	0.05 U	NA	NA
	Benzo(a)pyrene	NS	500	0.10 U	0.10 U	NA	0.10 U	NA	NA
	Benzo(b)fluoranthene	NS	400	0.05 U	0.05 U	NA	0.05 U	NA	NA
	Benzo(g,h,i)perylene	NS	20	0.50 U	0.50 U	NA	0.50 U	NA	NA
	Benzo(k)fluoranthene	NS	100	0.20 U	0.20 U	NA	0.20 U	NA	NA
	Chrysene	NS	70	0.20 U	0.20 U	NA	0.20 U	NA	NA
	Dibenz(a,h)anthracene	NS	40	0.20 U	0.20 U	NA	0.20 U	NA	NA
	Fluoranthene	NS	200	0.50 U	0.50 U	NA	0.50 U	NA	NA
	Fluorene	NS	40	1.0 U	1.0 U	NA	1.0 U	NA	NA
	Indeno(1,2,3-cd)pyrene	NS	100	0.20 U	0.20 U	NA	0.20 U	NA	NA
	2-Methylnaphthalene	2,000	20,000	1.0 U	1.0 U	NA	1.0 U	NA	NA
	Naphthalene	700	20,000	1.0 U	1.0 U	NA	1.0 U	NA	NA
	Phenanthrene	NS	10,000	0.05 U	0.05 U	NA	0.05 U	NA	NA
	Pyrene	NS	20	1.0 U	1.0 U	NA	1.0 U	NA	NA
PCBs									
(ug/L)	Aroclor 1016	5	10	0.050 U	NA	NA	0.050 U	0.050 U	NA
	Aroclor 1221	5	10	0.050 U	NA	NA	0.050 U	0.050 U	NA
	Aroclor 1232	5	10	0.050 U	NA	NA	0.050 U	0.050 U	NA
	Aroclor 1242	5	10	0.050 U	NA	NA	0.050 U	0.050 U	NA
	Aroclor 1248	5	10	0.050 U	NA	NA	0.050 U	0.050 U	NA
	Aroclor 1254	5	10	0.050 U	NA	NA	0.050 U	0.050 U	NA
	Aroclor 1260	5	10	0.050 U	NA	NA	0.050 U	0.050 U	NA
	Aroclor 1262	5	10	NA	NA	NA	NA	NA	NA
	Aroclor 1268	5	10	NA	NA	NA	NA	NA	NA
	Total PCBs	5	10	0.050 U	NA	NA	0.050 U	0.050 U	NA
Total Petroleum Hydrocarbons									
(ug/L)	Total Petroleum Hydrocarbons (C9-C44	5,000	5,000	NA	NA	NA	NA	NA	NA
Metals, total									
(ug/L)	Antimony	NS	8,000	40.0 U	40.0 U	NA	40.0 U	NA	NA
	Arsenic	NS	900	5.0 U	5.0 U	NA	5.0 U	NA	NA
	Barium	NS	50,000	**5,570**	**5,710**	NA	**157**	NA	NA
	Beryllium	NS	200	2.0 U	2.0 U	NA	2.0 U	NA	NA
	Cadmium	NS	4	2.5 U	2.5 U	NA	2.5 U	NA	NA
	Chromium	NS	300	5.0 U	5.0 U	NA	5.0 U	NA	NA
	Lead	NS	10	7.5 U	7.5 U	NA	**10.5**	NA	NA
	Mercury	NS	20	0.10 U	0.10 U	NA	0.10 U	NA	NA
	Nickel	NS	200	5.0 U	5.0 U	NA	5.0 U	NA	NA
	Selenium	NS	100	30.0 U	30.0 U	NA	30.0 U	NA	NA
	Silver	NS	7	3.0 U	3.0 U	NA	3.0 U	NA	NA
	Thallium	NS	3,000	30.0 U	30.0 U	NA	30.0 U	NA	NA
	Vanadium	NS	4,000	25.0 U	25.0 U	NA	25.0 U	NA	NA
	Zinc	NS	900	**17.0**	**20.0**	NA	**300**	NA	NA
Metals, dissolved									
(ug/L)	Antimony	NS	8,000	40.0 U	40.0 U	NA	40.0 U	NA	NA
	Arsenic	NS	900	5.0 U	5.0 U	NA	5.0 U	NA	NA
	Barium	NS	50,000	**5,340**	**5,490**	NA	**141**	NA	NA
	Beryllium	NS	200	2.0 U	2.0 U	NA	2.0 U	NA	NA
	Cadmium	NS	4	2.5 U	2.5 U	NA	2.5 U	NA	NA
	Chromium	NS	300	5.0 U	5.0 U	NA	5.0 U	NA	NA
	Lead	NS	10	7.5 U	7.5 U	NA	7.5 U	NA	NA
	Mercury	NS	20	0.10 U	0.10 U	NA	0.10 U	NA	NA
	Nickel	NS	200	5.0 U	5.0 U	NA	5.0 U	NA	NA
	Selenium	NS	100	30.0 U	30.0 U	NA	30.0 U	NA	NA
	Silver	NS	7	3.0 U	3.0 U	NA	3.0 U	NA	NA
	Thallium	NS	3,000	30.0 U	30.0 U	NA	30.0 U	NA	NA
	Vanadium	NS	4,000	25.0 U	25.0 U	NA	25.0 U	NA	NA
	Zinc	NS	900	**14.0**	**15.0**	NA	**270**	NA	NA
General Chemistry									
(ug/L)	Nitrogen, Nitrate	NS	NS	NA	NA	NA	NA	NA	NA
	Sulfate	NS	NS	NA	NA	NA	NA	NA	NA
	Total Organic Carbon	NS	NS	NA	NA	NA	NA	NA	NA

Notes:
ug/L - micrograms per liter.
B - Compound detected in associated method blank
J - Estimated value.
NA - Sample not analyzed for the listed analyte.
N/A - Not applicable.
NS - No MassDEP standards exist for this compound.
U - Compound was not detected at specified quantitation limit.
Values in **Bold** indicate the compound was detected.
VOCs - Volatile Organic Compounds.
PAHs - Polynuclear Aromatic Hydrocarbons.
PCBs - Polychlorinated Biphenyls.
(1) - MassDEP Method 1 standards for C9-C10 aromatic hydrocarbons used.
(2) - MassDEP Method 1 standards for 1,3-Dichloropropene used.
^ - 0.45 micron filtration done in field; 0.20 and 2.0 micron filtration performed in lab.
* - Sample collected on 4/10/2012 for PCB analysis was broken and was recollected on 4/18/2012
** - Lab filtered sample using a 2.0 micron filter and then filtered a second time using a 0.20 micr

Table 3
Summary of Hydraulic Control System Results for Water Samples - 2012 through 2014
New Bedford High School
New Bedford, Massachusetts

Analysis	Analyte	Sample Port:	SP-1																				
		Sample ID:	INFLUENT	INFLUENT	INFLUENT	INFLUENT	INFLUENT	INFLUENT	INFLUENT	INFLUENT	INFLUENT	MW-27-R	MW-42-R	INFLUENT	INFLUENT	INFLUENT	INFLUENT	INFLUENT	INFLUENT	INFLUENT	INFLUENT	INFLUENT (FILTERED)	INFLUENT
		Filter Size (micron)^:	N/A	N/A	N/A	N/A	N/A	N/A	N/A	N/A	N/A	N/A	N/A	N/A	N/A	N/A	N/A	N/A	N/A	N/A	N/A	0.45	N/A
		Sample Date:	3/20/2012	3/27/2012	4/3/2012	4/10/2012	4/17/2012	5/14/2012	6/11/2012	7/16/2012	8/21/2012	9/18/2012	9/18/2012	10/18/2012	11/21/2012	12/12/2012	1/15/2013	2/15/2013	3/13/2013	4/16/2013	5/16/2013	5/16/2013	6/18/2013
		Limits*																					
VOCs																							
(ug/L)	Methylene chloride	N/A	400 U	500 U	200 U	200 U	40 U	100 U	2.0 U	20 U	80 U	4.0 U	40 U	10 U	10 U	10 U	5.0 U	10 U	2.0 U	2.0 U	2.0 U	NA	2.0 U
	1,1-Dichloroethane	N/A	200 U	250 U	100 U	100 U	20 U	50 U	1.0 U	10 U	40 U	2.0 U	20 U	5.0 U	5.0 U	5.0 U	2.5 U	5.0 U	1.0 U	1.0 U	1.0 U	NA	1.0 U
	Chloroform	N/A	200 U	250 U	100 U	100 U	20 U	50 U	1.0 U	10 U	40 U	2.0 U	20 U	5.0 U	5.0 U	5.0 U	2.5 U	5.0 U	1.0 U	1.0 U	1.0 U	NA	1.0 U
	Carbon tetrachloride	N/A	200 U	250 U	100 U	100 U	20 U	50 U	1.0 U	10 U	40 U	2.0 U	20 U	5.0 U	5.0 U	5.0 U	2.5 U	5.0 U	1.0 U	1.0 U	1.0 U	NA	1.0 U
	1,2-Dichloropropane	N/A	200 U	250 U	100 U	100 U	20 U	50 U	1.0 U	10 U	40 U	2.0 U	20 U	5.0 U	5.0 U	5.0 U	2.5 U	5.0 U	1.0 U	1.0 U	1.0 U	NA	1.0 U
	Dibromochloromethane	N/A	200 U	250 U	100 U	100 U	20 U	50 U	1.0 U	10 U	40 U	2.0 U	20 U	5.0 U	5.0 U	5.0 U	2.5 U	5.0 U	1.0 U	1.0 U	1.0 U	NA	1.0 U
	1,1,2-Trichloroethane	N/A	200 U	250 U	100 U	100 U	20 U	50 U	1.0 U	10 U	40 U	2.0 U	20 U	5.0 U	5.0 U	5.0 U	2.5 U	5.0 U	1.0 U	1.0 U	1.0 U	NA	1.0 U
	Tetrachloroethene	N/A	200 U	250 U	100 U	100 U	20 U	50 U	1.0 U	10 U	40 U	2.0 U	20 U	5.0 U	5.0 U	5.0 U	2.5 U	5.0 U	1.0 U	1.0 U	1.0 U	NA	1.0 U
	Chlorobenzene	N/A	200 U	250 U	100 U	100 U	20 U	50 U	**3.5**	10 U	40 U	**2.7**	20 U	5.0 U	5.0 U	5.0 U	2.5 U	5.0 U	1.0 U	1.0 U	1.0 U	NA	1.0 U
	Trichlorofluoromethane	N/A	400 U	500 U	200 U	200 U	40 U	100 U	2.0 U	20 U	80 U	4.0 U	40 U	10 U	10 U	10 U	5.0 U	10 U	2.0 U	2.0 U	2.0 U	NA	2.0 U
	1,2-Dichloroethane	N/A	200 U	250 U	100 U	100 U	20 U	50 U	1.0 U	10 U	40 U	2.0 U	20 U	5.0 U	5.0 U	5.0 U	2.5 U	5.0 U	1.0 U	1.0 U	1.0 U	NA	1.0 U
	1,1,1-Trichloroethane	N/A	200 U	250 U	100 U	100 U	20 U	50 U	1.0 U	10 U	40 U	2.0 U	20 U	5.0 U	5.0 U	5.0 U	2.5 U	5.0 U	1.0 U	1.0 U	1.0 U	NA	1.0 U
	Bromodichloromethane	N/A	200 U	250 U	100 U	100 U	20 U	50 U	1.0 U	10 U	40 U	2.0 U	20 U	5.0 U	5.0 U	5.0 U	2.5 U	5.0 U	1.0 U	1.0 U	1.0 U	NA	1.0 U
	trans-1,3-Dichloropropene	N/A	100 U	120 U	50 U	50 U	10 U	25 U	0.50 U	5.0 U	20 U	1.0 U	10 U	2.5 U	2.5 U	2.5 U	1.2 U	2.5 U	0.50 U	0.50 U	0.50 U	NA	0.50 U
	cis-1,3-Dichloropropene	N/A	100 U	120 U	50 U	50 U	10 U	25 U	0.50 U	5.0 U	20 U	1.0 U	10 U	2.5 U	2.5 U	2.5 U	1.2 U	2.5 U	0.50 U	0.50 U	0.50 U	NA	0.50 U
	1,1-Dichloropropene	N/A	400 U	500 U	200 U	200 U	40 U	100 U	2.0 U	20 U	80 U	4.0 U	40 U	10 U	10 U	10 U	5.0 U	10 U	2.0 U	2.0 U	2.0 U	NA	2.0 U
	Bromoform	N/A	400 U	500 U	200 U	200 U	40 U	100 U	2.0 U	20 U	80 U	4.0 U	40 U	10 U	10 U	10 U	5.0 U	10 U	2.0 U	2.0 U	2.0 U	NA	2.0 U
	1,1,2,2-Tetrachloroethane	N/A	200 U	250 U	100 U	100 U	20 U	50 U	1.0 U	10 U	40 U	2.0 U	20 U	5.0 U	5.0 U	5.0 U	2.5 U	5.0 U	1.0 U	1.0 U	1.0 U	NA	1.0 U
	Benzene	N/A	100 U	120 U	50 U	50 U	10 U	25 U	0.50 U	5.0 U	20 U	1.0 U	10 U	2.5 U	2.5 U	2.5 U	1.2 U	2.5 U	0.50 U	0.50 U	0.50 U	NA	0.50 U
	Toluene	N/A	200 U	250 U	100 U	100 U	20 U	50 U	1.0 U	10 U	40 U	2.0 U	20 U	5.0 U	5.0 U	5.0 U	2.5 U	5.0 U	1.0 U	1.0 U	1.0 U	NA	1.0 U
	Ethylbenzene	N/A	200 U	250 U	100 U	100 U	**30**	50 U	**24**	**15**	40 U	**7.7**	20 U	5.0 U	5.0 U	5.0 U	2.5 U	5.0 U	1.0 U	**1.0**	1.0 U	NA	1.0 U
	Chloromethane	N/A	400 U	500 U	200 U	200 U	40 U	100 U	2.0 U	20 U	80 U	4.0 U	40 U	10 U	10 U	10 U	5.0 U	10 U	2.0 U	2.0 U	2.0 U	NA	2.0 U
	Bromomethane	N/A	400 U	500 U	200 U	200 U	40 U	100 U	2.0 U	20 U	80 U	4.0 U	40 U	10 U	10 U	10 U	5.0 U	10 U	2.0 U	2.0 U	2.0 U	NA	2.0 U
	Vinyl chloride	N/A	**350**	**320**	**400**	**440**	**550**	50 U	**130**	**190**	**220**	**24**	**58**	**18**	**14**	**25**	**6.2**	**7.9**	**2.2**	**7.8**	**8.8**	NA	**14**
	Chloroethane	N/A	400 U	500 U	200 U	200 U	40 U	100 U	2.0 U	20 U	80 U	4.0 U	40 U	10 U	10 U	10 U	5.0 U	10 U	2.0 U	2.0 U	2.0 U	NA	2.0 U
	1,1-Dichloroethene	N/A	200 U	250 U	100 U	100 U	20 U	50 U	1.0 U	10 U	40 U	2.0 U	20 U	5.0 U	5.0 U	5.0 U	2.5 U	5.0 U	1.0 U	1.0 U	1.0 U	NA	1.0 U
	trans-1,2-Dichloroethene	N/A	**1,100**	**460**	**490**	**400**	**550**	50 U	**200**	**250**	**740**	**23**	**250**	**110**	**81**	**110**	**45**	**45**	**1.6**	**30**	**32**	NA	**36**
	Trichloroethene	N/A	**19,000**	**24,000**	**8,900**	**6,800**	**3,200**	50 U	**180**	**89**	**50**	**31**	**150**	**51**	**29**	**40**	**17**	**15**	**1.0**	**12**	**13**	NA	**14**
	1,2-Dichlorobenzene	N/A	200 U	250 U	100 U	100 U	20 U	50 U	**4.0**	10 U	40 U	**4.9**	20 U	5.0 U	5.0 U	5.0 U	2.5 U	5.0 U	1.0 U	1.0 U	1.0 U	NA	1.0 U
	1,3-Dichlorobenzene	N/A	200 U	250 U	100 U	100 U	20 U	50 U	**11**	**13**	40 U	**14**	20 U	5.0 U	5.0 U	5.0 U	2.5 U	5.0 U	**1.2**	**2.0**	**2.1**	NA	**1.5**
	1,4-Dichlorobenzene	N/A	200 U	250 U	100 U	100 U	**38**	50 U	**50**	**59**	40 U	**67**	**26**	**20**	**8.6**	**19**	**7.8**	**9.7**	**4.9**	**8.2**	**6.0**	NA	**4.3**
	Methyl tert butyl ether	N/A	400 U	500 U	200 U	200 U	40 U	100 U	2.0 U	20 U	80 U	4.0 U	40 U	10 U	10 U	10 U	5.0 U	10 U	2.0 U	2.0 U	2.0 U	NA	2.0 U
	p/m-Xylene	N/A	400 U	500 U	200 U	200 U	40 U	100 U	2.0 U	20 U	80 U	4.0 U	40 U	10 U	10 U	10 U	5.0 U	10 U	2.0 U	2.0 U	2.0 U	NA	2.0 U
	o-Xylene	N/A	200 U	250 U	100 U	100 U	20 U	50 U	1.0 U	10 U	40 U	2.0 U	20 U	5.0 U	5.0 U	5.0 U	2.5 U	5.0 U	1.0 U	1.0 U	1.0 U	NA	1.0 U
	cis-1,2-Dichloroethene	N/A	**3,300**	**1,600**	**1,900**	**1,600**	**1,800**	50 U	**690**	**950**	**3,100**	**120**	**1,100**	**450**	**320**	**340**	**170**	**160**	**4.6**	**72**	**88**	NA	**140**
	Dibromomethane	N/A	400 U	500 U	200 U	200 U	40 U	100 U	2.0 U	20 U	80 U	4.0 U	40 U	10 U	10 U	10 U	5.0 U	10 U	2.0 U	2.0 U	2.0 U	NA	2.0 U
	1,2,3-Trichloropropane	N/A	400 U	500 U	200 U	200 U	40 U	100 U	2.0 U	20 U	80 U	4.0 U	40 U	10 U	10 U	10 U	5.0 U	10 U	2.0 U	2.0 U	2.0 U	NA	2.0 U
	Styrene	N/A	200 U	250 U	100 U	100 U	**21**	50 U	**1.2**	10 U	40 U	2.0 U	20 U	5.0 U	5.0 U	5.0 U	2.5 U	5.0 U	1.0 U	1.0 U	1.0 U	NA	1.0 U
	Dichlorodifluoromethane	N/A	400 U	500 U	200 U	200 U	40 U	100 U	2.0 U	20 U	80 U	4.0 U	40 U	10 U	10 U	10 U	5.0 U	10 U	2.0 U	2.0 U	2.0 U	NA	2.0 U
	Acetone	N/A	1,000 U	1,200 U	500 U	500 U	100 U	250 U	**7.8**	50 U	200 U	10 U	100 U	25 U	25 U	25 U	12 U	25 U	5.0 U	5.0 U	5.0 U	NA	**8.7**
	Carbon disulfide	N/A	400 U	500 U	200 U	200 U	40 U	100 U	2.0 U	20 U	80 U	4.0 U	40 U	10 U	10 U	10 U	5.0 U	10 U	2.0 U	2.0 U	2.0 U	NA	2.0 U
	2-Butanone	N/A	1,000 U	1,200 U	500 U	500 U	100 U	250 U	5.0 U	50 U	200 U	10 U	100 U	25 U	25 U	25 U	12 U	25 U	5.0 U	5.0 U	5.0 U	NA	5.0 U
	4-Methyl-2-pentanone	N/A	1,000 U	1,200 U	500 U	500 U	100 U	250 U	5.0 U	50 U	200 U	10 U	100 U	25 U	25 U	25 U	12 U	25 U	5.0 U	5.0 U	5.0 U	NA	5.0 U
	2-Hexanone	N/A	1,000 U	1,200 U	500 U	500 U	100 U	250 U	5.0 U	50 U	200 U	10 U	100 U	25 U	25 U	25 U	12 U	25 U	5.0 U	5.0 U	5.0 U	NA	5.0 U
	Bromochloromethane	N/A	400 U	500 U	200 U	200 U	40 U	100 U	2.0 U	20 U	80 U	4.0 U	40 U	10 U	10 U	10 U	5.0 U	10 U	2.0 U	2.0 U	2.0 U	NA	2.0 U
	Tetrahydrofuran	N/A	1,000 U	1,200 U	500 U	500 U	100 U	250 U	5.0 U	50 U	200 U	10 U	100 U	25 U	25 U	25 U	12 U	25 U	5.0 U	5.0 U	2.0 U	NA	2.0 U
	2,2-Dichloropropane	N/A	400 U	500 U	200 U	200 U	40 U	100 U	2.0 U	20 U	80 U	4.0 U	40 U	10 U	10 U	10 U	5.0 U	10 U	2.0 U	2.0 U	2.0 U	NA	2.0 U
	1,2-Dibromoethane	N/A	400 U	500 U	200 U	200 U	40 U	100 U	2.0 U	20 U	80 U	4.0 U	40 U	10 U	10 U	10 U	5.0 U	10 U	2.0 U	2.0 U	2.0 U	NA	2.0 U
	1,3-Dichloropropane	N/A	400 U	500 U	200 U	200 U	40 U	100 U	2.0 U	20 U	80 U	4.0 U	40 U	10 U	10 U	10 U	5.0 U	10 U	2.0 U	2.0 U	2.0 U	NA	2.0 U
	1,1,1,2-Tetrachloroethane	N/A	200 U	250 U	100 U	100 U	20 U	50 U	1.0 U	10 U	40 U	2.0 U	20 U	5.0 U	5.0 U	5.0 U	2.5 U	5.0 U	1.0 U	1.0 U	1.0 U	NA	1.0 U
	Bromobenzene	N/A	400 U	500 U	200 U	200 U	40 U	100 U	2.0 U	20 U	80 U	4.0 U	40 U	10 U	10 U	10 U	5.0 U	10 U	2.0 U	2.0 U	2.0 U	NA	2.0 U
	n-Butylbenzene	N/A	400 U	500 U	200 U	200 U	40 U	100 U	2.0 U	20 U	80 U	4.0 U	40 U	10 U	10 U	10 U	5.0 U	10 U	2.0 U	2.0 U	2.0 U	NA	2.0 U
	sec-Butylbenzene	N/A	400 U	500 U	200 U	200 U	40 U	100 U	2.0 U	20 U	80 U	4.0 U	40 U	10 U	10 U	10 U	5.0 U	10 U	2.0 U	2.0 U	2.0 U	NA	2.0 U
	tert-Butylbenzene	N/A	400 U	500 U	200 U	200 U	40 U	100 U	2.0 U	20 U	80 U	4.0 U	40 U	10 U	10 U	10 U	5.0 U	10 U	2.0 U	2.0 U	2.0 U	NA	2.0 U
	o-Chlorotoluene	N/A	400 U	500 U	200 U	200 U	40 U	100 U	2.0 U	20 U	80 U	4.0 U	40 U	10 U	10 U	10 U	5.0 U	10 U	2.0 U	2.0 U	2.0 U	NA	2.0 U
	p-Chlorotoluene	N/A	400 U	500 U	200 U	200 U	40 U	100 U	2.0 U	20 U	80 U	4.0 U	40 U	10 U	10 U	10 U	5.0 U	10 U	2.0 U	2.0 U	2.0 U	NA	2.0 U
	1,2-Dibromo-3-chloropropane	N/A	400 U	500 U	200 U	200 U	40 U	100 U	2.0 U	20 U	80 U	4.0 U	40 U	10 U	10 U	10 U	5.0 U	10 U	2.0 U	2.0 U	2.0 U	NA	2.0 U
	Hexachlorobutadiene	N/A	120 U	150 U	60 U	60 U	12 U	30 U	0.60 U	6.0 U	24 U	1.2 U	12 U	3.0 U	3.0 U	3.0 U	1.5 U	3.0 U	0.60 U	0.60 U	0.60 U	NA	0.60 U

Table 3
Summary of Hydraulic Control System Results for Water Samples - 2012 through 2014
New Bedford High School
New Bedford, Massachusetts

Analysis	Analyte	Sample Port:	SP-1																				
		Sample ID:	INFLUENT	INFLUENT	INFLUENT	INFLUENT	INFLUENT	INFLUENT	INFLUENT	INFLUENT	INFLUENT	MW-27-R	MW-42-R	INFLUENT	INFLUENT	INFLUENT	INFLUENT	INFLUENT	INFLUENT	INFLUENT	INFLUENT	INFLUENT (FILTERED)	INFLUENT
		Filter Size (micron)^:	N/A	N/A	N/A	N/A	N/A	N/A	N/A	N/A	N/A	N/A	N/A	N/A	N/A	N/A	N/A	N/A	N/A	N/A	N/A	0.45	N/A
		Sample Date:	3/20/2012	3/27/2012	4/3/2012	4/10/2012	4/17/2012	5/14/2012	6/11/2012	7/16/2012	8/21/2012	9/18/2012	9/18/2012	10/18/2012	11/21/2012	12/12/2012	1/15/2013	2/15/2013	3/13/2013	4/16/2013	5/16/2013	5/16/2013	6/18/2013
		Limits*																					
	Isopropylbenzene	N/A	400 U	500 U	200 U	200 U	40 U	100 U	2.0 U	20 U	80 U	4.0 U	40 U	10 U	10 U	10 U	5.0 U	10 U	2.0 U	2.0 U	2.0 U	NA	2.0 U
	p-Isopropyltoluene	N/A	400 U	500 U	200 U	200 U	40 U	100 U	2.0 U	20 U	80 U	4.0 U	40 U	10 U	10 U	10 U	5.0 U	10 U	2.0 U	2.0 U	2.0 U	NA	2.0 U
	Naphthalene	N/A	400 U	500 U	200 U	200 U	40 U	100 U	2.0 U	20 U	80 U	4.0 U	40 U	10 U	10 U	10 U	5.0 U	10 U	2.0 U	2.0 U	2.0 U	NA	2.0 U
	n-Propylbenzene	N/A	400 U	500 U	200 U	200 U	40 U	100 U	2.0 U	20 U	80 U	4.0 U	40 U	10 U	10 U	10 U	5.0 U	10 U	2.0 U	2.0 U	2.0 U	NA	2.0 U
	1,2,3-Trichlorobenzene	N/A	400 U	500 U	200 U	200 U	40 U	100 U	**9.7**	20 U	80 U	4.0 U	40 U	10 U	10 U	10 U	5.0 U	10 U	2.0 U	2.0 U	2.0 U	NA	2.0 U
	1,2,4-Trichlorobenzene	N/A	400 U	500 U	200 U	200 U	**73**	100 U	**46**	20 U	80 U	**23**	40 U	10 U	10 U	**11**	5.0 U	10 U	**3.2**	**5.8**	**3.0**	NA	2.0 U
	1,3,5-Trimethylbenzene	N/A	400 U	500 U	200 U	200 U	40 U	100 U	2.0 U	20 U	80 U	4.0 U	40 U	10 U	10 U	10 U	5.0 U	10 U	2.0 U	2.0 U	2.0 U	NA	2.0 U
	1,2,4-Trimethylbenzene	N/A	400 U	500 U	200 U	200 U	40 U	100 U	2.0 U	20 U	80 U	4.0 U	40 U	10 U	10 U	10 U	5.0 U	10 U	2.0 U	2.0 U	2.0 U	NA	2.0 U
	Ethyl ether	N/A	400 U	500 U	200 U	200 U	40 U	100 U	2.0 U	20 U	80 U	4.0 U	40 U	10 U	10 U	10 U	5.0 U	10 U	2.0 U	2.0 U	2.0 U	NA	2.0 U
	Isopropyl Ether	N/A	400 U	500 U	200 U	200 U	40 U	100 U	2.0 U	20 U	80 U	4.0 U	40 U	10 U	10 U	10 U	5.0 U	10 U	2.0 U	2.0 U	2.0 U	NA	2.0 U
	Ethyl-Tert-Butyl-Ether	N/A	400 U	500 U	200 U	200 U	40 U	100 U	2.0 U	20 U	80 U	4.0 U	40 U	10 U	10 U	10 U	5.0 U	10 U	2.0 U	2.0 U	2.0 U	NA	2.0 U
	Tertiary-Amyl Methyl Ether	N/A	400 U	500 U	200 U	200 U	40 U	100 U	2.0 U	20 U	80 U	4.0 U	40 U	10 U	10 U	10 U	5.0 U	10 U	2.0 U	2.0 U	2.0 U	NA	2.0 U
	1,4-Dioxane	N/A	50,000 U	62,000 U	25,000 U	25,000 U	5,000 U	12,000 U	250 U	2,500 U	10,000 U	500 U	5,000 U	1,200 U	1,200 U	1,200 U	620 U	1,200 U	250 U	250 U	250 U	NA	250 U
VOCs - TICs																							
(ug/L)	Sulfur Dioxide	N/A	NA	NA	NA	NA	NA	NA	**4.9 NJ**	NA	NA	NA	NA	NA	NA	NA	NA	NA	NA	NA	NA	NA	NA
	Unknown aldehyde	N/A	NA	NA	NA	NA	NA	NA	**1.3 J**	NA	NA	NA	NA	NA	NA	NA	NA	NA	NA	NA	NA	NA	NA
	Unknown Substituted Alkanes	N/A	NA	NA	NA	NA	NA	NA	**3.2 J**	NA	NA	NA	NA	NA	NA	NA	NA	NA	NA	NA	NA	NA	NA
	Unknown Substituted Alkenes	N/A	NA	NA	NA	NA	NA	NA	**22 J**	NA	NA	NA	NA	NA	NA	NA	NA	NA	NA	NA	NA	NA	NA
	Unknown	N/A	NA	NA	NA	NA	NA	NA	**2.1 J**	NA	NA	NA	NA	NA	NA	NA	NA	NA	NA	NA	NA	NA	NA
PCBs																							
(ug/L)	Aroclor 1016	N/A	250 U	5.00 U	500 U	25.2 U	5.05 U	5.00 U	9.95 U	5.00 U	0.500 U	5.00 U	1.25 U	2.50 U	2.50 U	1.25 U	5.00 U	6.25 U	5.00 U	5.00 U	2.50 U	0.667 U	1.25 U
	Aroclor 1221	N/A	250 U	5.00 U	500 U	25.2 U	5.05 U	5.00 U	9.95 U	5.00 U	0.500 U	5.00 U	1.25 U	2.50 U	2.50 U	1.25 U	5.00 U	6.25 U	5.00 U	5.00 U	2.50 U	0.667 U	1.25 U
	Aroclor 1232	N/A	250 U	5.00 U	500 U	25.2 U	5.05 U	5.00 U	9.95 U	5.00 U	0.500 U	5.00 U	1.25 U	2.50 U	2.50 U	1.25 U	5.00 U	6.25 U	5.00 U	5.00 U	2.50 U	0.667 U	1.25 U
	Aroclor 1242	N/A	250 U	5.00 U	500 U	25.2 U	5.05 U	5.00 U	9.95 U	5.00 U	0.500 U	5.00 U	1.25 U	2.50 U	2.50 U	1.25 U	5.00 U	6.25 U	5.00 U	5.00 U	2.50 U	0.667 U	1.25 U
	Aroclor 1248	N/A	250 U	5.00 U	500 U	25.2 U	5.05 U	5.00 U	9.95 U	5.00 U	0.500 U	5.00 U	1.25 U	2.50 U	2.50 U	1.25 U	5.00 U	6.25 U	5.00 U	5.00 U	2.50 U	0.667 U	1.25 U
	Aroclor 1254	N/A	**5,120**	**75.9**	**6,800**	**683**	**178**	**112**	**238**	5.00 U	**11.0**	**105**	**15.7**	**36.9**	**45.9**	**18.5**	**151**	**60.7**	**102**	**151**	**55.5**	**16.1**	**22.4**
	Aroclor 1260	N/A	250 U	5.00 U	500 U	25.2 U	5.05 U	5.00 U	9.95 U	**37.3**	0.500 U	5.00 U	1.25 U	2.50 U	2.50 U	1.25 U	5.00 U	6.25 U	5.00 U	5.00 U	2.50 U	0.667 U	1.25 U
	Aroclor 1262	N/A	250 U	5.00 U	500 U	25.2 U	5.05 U	5.00 U	9.95 U	5.00 U	0.500 U	5.00 U	1.25 U	2.50 U	2.50 U	1.25 U	5.00 U	6.25 U	5.00 U	5.00 U	2.50 U	0.667 U	1.25 U
	Aroclor 1268	N/A	250 U	5.00 U	500 U	25.2 U	5.05 U	5.00 U	9.95 U	5.00 U	0.500 U	5.00 U	1.25 U	2.50 U	2.50 U	1.25 U	5.00 U	6.25 U	5.00 U	5.00 U	2.50 U	0.667 U	1.25 U
	Total PCBs	5	**5,120**	**75.9**	**6,800**	**683**	**178**	**112**	**238**	**37.3**	**11.0**	**105**	**15.7**	**36.9**	**45.9**	**18.5**	**151**	**60.7**	**102**	**151**	**55.5**	**16.1**	**22.4**
Total Petroleum Hydrocarbons																							
(ug/L)	TPH	N/A	NA	NA	NA	NA	NA	NA	NA	NA	NA	NA	NA	NA	NA	NA	NA	NA	NA	NA	500 U	714 U	200 U

Notes:
ug/L - micrograms per liter.
NJ - Presumptive evidence of compound.
J - Estimated value.
NA - Sample not analyzed for the listed analyte.
N/A - Not applicable.
U - Compound was not detected at specified quantitation limit.
Values in **Bold** indicate the compound was detected.
VOCs - Volatile Organic Compounds.
PCBs - Polychlorinated Biphenyls.
TICs - Tentatively identified compounds.
* - City of New Bedford Industrial Discharge Permit number S-123.
^ - 0.45 micron filtration done in field; 0.20 and 2.0 micron filtration performed in lab.

Table 3
Summary of Hydraulic Control System Results for Water Samples - 2012 through 2014
New Bedford High School
New Bedford, Massachusetts

Analysis	Analyte	Sample Port:	SP-1																			
		Sample ID:	INFLUENT (FILTERED)	INFLUENT	INFLUENT (FILTERED)	INFLUENT	INFLUENT (FILTERED)	INFLUENT	INFLUENT (FILTERED)	INFLUENT	INFLUENT (FILTERED)	INFLUENT	INFLUENT (FILTERED)	INFLUENT	INFLUENT (FILTERED)	INFLUENT	INFLUENT (FILTERED)	INFLUENT	INFLUENT (FILTERED)	INFLUENT	INFLUENT (FILTERED)	INFLUENT
		Filter Size (micron)^:	0.20	N/A	0.20	N/A	0.20	N/A	0.20	N/A	0.20	N/A	0.20	N/A	0.20	N/A	0.20	N/A	0.20	N/A	0.20	N/A
		Sample Date:	6/18/2013	7/30/2013	7/30/2013	8/20/2013	8/20/2013	9/16/2013	9/16/2013	10/15/2013	10/15/2013	11/15/2013	11/15/2013	12/17/2013	12/17/2013	1/16/2014	1/16/2014	2/14/2014	2/14/2014	3/17/2014	3/17/2014	4/21/2014
		Limits*																				
VOCs																						
(ug/L)	Methylene chloride	N/A	NA	2.0 U	NA	2.0 U	NA	2.0 U	NA	2.0 U	NA	2.0 U	NA	4.0 U	NA	2.0 U	NA	2.0 U	NA	2.0 U	NA	2.0 U
	1,1-Dichloroethane	N/A	NA	1.0 U	NA	1.0 U	NA	1.0 U	NA	1.0 U	NA	1.0 U	NA	2.0 U	NA	1.0 U	NA	1.0 U	NA	1.0 U	NA	1.0 U
	Chloroform	N/A	NA	1.0 U	NA	1.0 U	NA	1.0 U	NA	1.0 U	NA	1.0 U	NA	2.0 U	NA	1.0 U	NA	1.0 U	NA	1.0 U	NA	1.0 U
	Carbon tetrachloride	N/A	NA	1.0 U	NA	1.0 U	NA	1.0 U	NA	1.0 U	NA	1.0 U	NA	2.0 U	NA	1.0 U	NA	1.0 U	NA	1.0 U	NA	1.0 U
	1,2-Dichloropropane	N/A	NA	1.0 U	NA	1.0 U	NA	1.0 U	NA	1.0 U	NA	1.0 U	NA	2.0 U	NA	1.0 U	NA	1.0 U	NA	1.0 U	NA	1.0 U
	Dibromochloromethane	N/A	NA	1.0 U	NA	1.0 U	NA	1.0 U	NA	1.0 U	NA	1.0 U	NA	2.0 U	NA	1.0 U	NA	1.0 U	NA	1.0 U	NA	1.0 U
	1,1,2-Trichloroethane	N/A	NA	1.0 U	NA	1.0 U	NA	1.0 U	NA	1.0 U	NA	1.0 U	NA	2.0 U	NA	1.0 U	NA	1.0 U	NA	1.0 U	NA	1.0 U
	Tetrachloroethene	N/A	NA	1.0 U	NA	1.0 U	NA	1.0 U	NA	1.0 U	NA	1.0 U	NA	2.0 U	NA	1.0 U	NA	1.0 U	NA	1.0 U	NA	1.0 U
	Chlorobenzene	N/A	NA	1.0 U	NA	1.0 U	NA	1.0 U	NA	1.0 U	NA	1.0 U	NA	2.0 U	NA	1.0 U	NA	1.0 U	NA	1.0 U	NA	1.0 U
	Trichlorofluoromethane	N/A	NA	2.0 U	NA	2.0 U	NA	2.0 U	NA	2.0 U	NA	2.0 U	NA	4.0 U	NA	2.0 U	NA	2.0 U	NA	2.0 U	NA	2.0 U
	1,2-Dichloroethane	N/A	NA	1.0 U	NA	1.0 U	NA	1.0 U	NA	1.0 U	NA	1.0 U	NA	2.0 U	NA	1.0 U	NA	1.0 U	NA	1.0 U	NA	1.0 U
	1,1,1-Trichloroethane	N/A	NA	1.0 U	NA	1.0 U	NA	1.0 U	NA	1.0 U	NA	1.0 U	NA	2.0 U	NA	1.0 U	NA	1.0 U	NA	1.0 U	NA	1.0 U
	Bromodichloromethane	N/A	NA	1.0 U	NA	1.0 U	NA	1.0 U	NA	1.0 U	NA	1.0 U	NA	2.0 U	NA	1.0 U	NA	1.0 U	NA	1.0 U	NA	1.0 U
	trans-1,3-Dichloropropene	N/A	NA	0.50 U	NA	0.50 U	NA	0.50 U	NA	0.50 U	NA	0.50 U	NA	1.0 U	NA	0.50 U	NA	0.50 U	NA	0.50 U	NA	0.50 U
	cis-1,3-Dichloropropene	N/A	NA	0.50 U	NA	0.50 U	NA	0.50 U	NA	0.50 U	NA	0.50 U	NA	1.0 U	NA	0.50 U	NA	0.50 U	NA	0.50 U	NA	0.50 U
	1,1-Dichloropropene	N/A	NA	2.0 U	NA	2.0 U	NA	2.0 U	NA	2.0 U	NA	2.0 U	NA	4.0 U	NA	2.0 U	NA	2.0 U	NA	2.0 U	NA	2.0 U
	Bromoform	N/A	NA	2.0 U	NA	2.0 U	NA	2.0 U	NA	2.0 U	NA	2.0 U	NA	4.0 U	NA	2.0 U	NA	2.0 U	NA	2.0 U	NA	2.0 U
	1,1,2,2-Tetrachloroethane	N/A	NA	1.0 U	NA	1.0 U	NA	1.0 U	NA	1.0 U	NA	1.0 U	NA	2.0 U	NA	1.0 U	NA	1.0 U	NA	1.0 U	NA	1.0 U
	Benzene	N/A	NA	0.50 U	NA	0.50 U	NA	0.50 U	NA	0.50 U	NA	0.50 U	NA	1.0 U	NA	0.50 U	NA	0.50 U	NA	0.50 U	NA	0.50 U
	Toluene	N/A	NA	1.0 U	NA	1.0 U	NA	**1.1**	NA	1.0 U	NA	1.0 U	NA	**25**	NA	**1.4**	NA	**1.6**	NA	1.0 U	NA	1.0 U
	Ethylbenzene	N/A	NA	1.0 U	NA	1.0 U	NA	1.0 U	NA	1.0 U	NA	1.0 U	NA	2.0 U	NA	1.0 U	NA	1.0 U	NA	1.0 U	NA	1.0 U
	Chloromethane	N/A	NA	2.0 U	NA	2.0 U	NA	2.0 U	NA	2.0 U	NA	2.0 U	NA	4.0 U	NA	2.0 U	NA	2.0 U	NA	2.0 U	NA	2.0 U
	Bromomethane	N/A	NA	2.0 U	NA	2.0 U	NA	2.0 U	NA	2.0 U	NA	2.0 U	NA	4.0 U	NA	2.0 U	NA	2.0 U	NA	2.0 U	NA	2.0 U
	Vinyl chloride	N/A	NA	**9.1**	NA	**6.0**	NA	**11.0**	NA	**8.2**	NA	**8.1**	NA	**25**	NA	**26**	NA	1.0 U	NA	**6.8**	NA	**4.1**
	Chloroethane	N/A	NA	2.0 U	NA	2.0 U	NA	2.0 U	NA	2.0 U	NA	2.0 U	NA	4.0 U	NA	2.0 U	NA	2.0 U	NA	2.0 U	NA	2.0 U
	1,1-Dichloroethene	N/A	NA	1.0 U	NA	1.0 U	NA	1.0 U	NA	1.0 U	NA	1.0 U	NA	2.0 U	NA	1.0 U	NA	1.0 U	NA	1.0 U	NA	1.0 U
	trans-1,2-Dichloroethene	N/A	NA	**17**	NA	**13**	NA	**23**	NA	**18**	NA	**17**	NA	**31**	NA	**12**	NA	1.0 U	NA	**11**	NA	**5.5**
	Trichloroethene	N/A	NA	**6.6**	NA	**3.5**	NA	**4.5**	NA	**3.3**	NA	**5.7**	NA	**3.5**	NA	**1.9**	NA	1.0 U	NA	**5.3**	NA	**5.3**
	1,2-Dichlorobenzene	N/A	NA	1.0 U	NA	1.0 U	NA	1.0 U	NA	1.0 U	NA	1.0 U	NA	2.0 U	NA	1.0 U	NA	1.0 U	NA	1.0 U	NA	1.0 U
	1,3-Dichlorobenzene	N/A	NA	**2.3**	NA	**1.8**	NA	**1.8**	NA	**1.6**	NA	**1.7**	NA	2.0 U	NA	**1.7**	NA	**1.8**	NA	**1.1**	NA	1.0 U
	1,4-Dichlorobenzene	N/A	NA	**7.5**	NA	**5.6**	NA	**5.1**	NA	**4.6**	NA	**4.8**	NA	**5.5**	NA	**6.5**	NA	**6.6**	NA	**3.8**	NA	**1.3**
	Methyl tert butyl ether	N/A	NA	2.0 U	NA	2.0 U	NA	2.0 U	NA	2.0 U	NA	2.0 U	NA	4.0 U	NA	2.0 U	NA	2.0 U	NA	2.0 U	NA	2.0 U
	p/m-Xylene	N/A	NA	2.0 U	NA	2.0 U	NA	2.0 U	NA	2.0 U	NA	2.0 U	NA	4.0 U	NA	2.0 U	NA	2.0 U	NA	2.0 U	NA	2.0 U
	o-Xylene	N/A	NA	1.0 U	NA	1.0 U	NA	1.0 U	NA	1.0 U	NA	1.0 U	NA	2.0 U	NA	1.0 U	NA	1.0 U	NA	1.0 U	NA	1.0 U
	cis-1,2-Dichloroethene	N/A	NA	**54**	NA	**51**	NA	**87**	NA	**71**	NA	**82**	NA	**110**	NA	**28**	NA	**1.7**	NA	**39**	NA	**21**
	Dibromomethane	N/A	NA	2.0 U	NA	2.0 U	NA	2.0 U	NA	2.0 U	NA	2.0 U	NA	4.0 U	NA	2.0 U	NA	2.0 U	NA	2.0 U	NA	2.0 U
	1,2,3-Trichloropropane	N/A	NA	2.0 U	NA	2.0 U	NA	2.0 U	NA	2.0 U	NA	2.0 U	NA	4.0 U	NA	2.0 U	NA	2.0 U	NA	2.0 U	NA	2.0 U
	Styrene	N/A	NA	1.0 U	NA	1.0 U	NA	1.0 U	NA	1.0 U	NA	1.0 U	NA	2.0 U	NA	1.0 U	NA	1.0 U	NA	1.0 U	NA	1.0 U
	Dichlorodifluoromethane	N/A	NA	2.0 U	NA	2.0 U	NA	2.0 U	NA	2.0 U	NA	2.0 U	NA	4.0 U	NA	2.0 U	NA	2.0 U	NA	2.0 U	NA	2.0 U
	Acetone	N/A	NA	5.0 U	NA	5.0 U	NA	5.0 U	NA	5.0 U	NA	5.0 U	NA	10 U	NA	5.0 U	NA	5.0 U	NA	5.0 U	NA	5.0 U
	Carbon disulfide	N/A	NA	2.0 U	NA	2.0 U	NA	2.0 U	NA	2.0 U	NA	2.0 U	NA	4.0 U	NA	2.0 U	NA	2.0 U	NA	2.0 U	NA	2.0 U
	2-Butanone	N/A	NA	5.0 U	NA	5.0 U	NA	5.0 U	NA	5.0 U	NA	5.0 U	NA	10 U	NA	5.0 U	NA	5.0 U	NA	5.0 U	NA	5.0 U
	4-Methyl-2-pentanone	N/A	NA	5.0 U	NA	5.0 U	NA	5.0 U	NA	5.0 U	NA	5.0 U	NA	10 U	NA	5.0 U	NA	5.0 U	NA	5.0 U	NA	5.0 U
	2-Hexanone	N/A	NA	5.0 U	NA	5.0 U	NA	5.0 U	NA	5.0 U	NA	5.0 U	NA	10 U	NA	5.0 U	NA	5.0 U	NA	5.0 U	NA	5.0 U
	Bromochloromethane	N/A	NA	2.0 U	NA	2.0 U	NA	2.0 U	NA	2.0 U	NA	2.0 U	NA	4.0 U	NA	2.0 U	NA	2.0 U	NA	2.0 U	NA	2.0 U
	Tetrahydrofuran	N/A	NA	2.0 U	NA	2.0 U	NA	2.0 U	NA	2.0 U	NA	2.0 U	NA	4.0 U	NA	2.0 U	NA	2.0 U	NA	2.0 U	NA	2.0 U
	2,2-Dichloropropane	N/A	NA	2.0 U	NA	2.0 U	NA	2.0 U	NA	2.0 U	NA	2.0 U	NA	4.0 U	NA	2.0 U	NA	2.0 U	NA	2.0 U	NA	2.0 U
	1,2-Dibromoethane	N/A	NA	2.0 U	NA	2.0 U	NA	2.0 U	NA	2.0 U	NA	2.0 U	NA	4.0 U	NA	2.0 U	NA	2.0 U	NA	2.0 U	NA	2.0 U
	1,3-Dichloropropane	N/A	NA	2.0 U	NA	2.0 U	NA	2.0 U	NA	2.0 U	NA	2.0 U	NA	4.0 U	NA	2.0 U	NA	2.0 U	NA	2.0 U	NA	2.0 U
	1,1,1,2-Tetrachloroethane	N/A	NA	1.0 U	NA	1.0 U	NA	1.0 U	NA	1.0 U	NA	1.0 U	NA	2.0 U	NA	1.0 U	NA	1.0 U	NA	1.0 U	NA	1.0 U
	Bromobenzene	N/A	NA	2.0 U	NA	2.0 U	NA	2.0 U	NA	2.0 U	NA	2.0 U	NA	4.0 U	NA	2.0 U	NA	2.0 U	NA	2.0 U	NA	2.0 U
	n-Butylbenzene	N/A	NA	2.0 U	NA	2.0 U	NA	2.0 U	NA	2.0 U	NA	2.0 U	NA	4.0 U	NA	2.0 U	NA	2.0 U	NA	2.0 U	NA	2.0 U
	sec-Butylbenzene	N/A	NA	2.0 U	NA	2.0 U	NA	2.0 U	NA	2.0 U	NA	2.0 U	NA	4.0 U	NA	2.0 U	NA	2.0 U	NA	2.0 U	NA	2.0 U
	tert-Butylbenzene	N/A	NA	2.0 U	NA	2.0 U	NA	2.0 U	NA	2.0 U	NA	2.0 U	NA	4.0 U	NA	2.0 U	NA	2.0 U	NA	2.0 U	NA	2.0 U
	o-Chlorotoluene	N/A	NA	2.0 U	NA	2.0 U	NA	2.0 U	NA	2.0 U	NA	2.0 U	NA	4.0 U	NA	2.0 U	NA	2.0 U	NA	2.0 U	NA	2.0 U
	p-Chlorotoluene	N/A	NA	2.0 U	NA	2.0 U	NA	2.0 U	NA	2.0 U	NA	2.0 U	NA	4.0 U	NA	2.0 U	NA	2.0 U	NA	2.0 U	NA	2.0 U
	1,2-Dibromo-3-chloropropane	N/A	NA	2.0 U	NA	2.0 U	NA	2.0 U	NA	2.0 U	NA	2.0 U	NA	4.0 U	NA	2.0 U	NA	2.0 U	NA	2.0 U	NA	2.0 U
	Hexachlorobutadiene	N/A	NA	0.60 U	NA	0.60 U	NA	0.60 U	NA	0.60 U	NA	0.60 U	NA	1.2 U	NA	0.60 U	NA	0.60 U	NA	0.60 U	NA	0.60 U

Table 3
Summary of Hydraulic Control System Results for Water Samples - 2012 through 2014
New Bedford High School
New Bedford, Massachusetts

Analysis	Analyte	Sample Port:	SP-1																			
		Sample ID:	INFLUENT (FILTERED)	INFLUENT	INFLUENT (FILTERED)	INFLUENT	INFLUENT (FILTERED)	INFLUENT	INFLUENT (FILTERED)	INFLUENT	INFLUENT (FILTERED)	INFLUENT	INFLUENT (FILTERED)	INFLUENT	INFLUENT (FILTERED)	INFLUENT	INFLUENT (FILTERED)	INFLUENT	INFLUENT (FILTERED)	INFLUENT	INFLUENT (FILTERED)	INFLUENT
		Filter Size (micron)^:	0.20	N/A	0.20	N/A	0.20	N/A	0.20	N/A	0.20	N/A	0.20	N/A	0.20	N/A	0.20	N/A	0.20	N/A	0.20	N/A
		Sample Date:	6/18/2013	7/30/2013	7/30/2013	8/20/2013	8/20/2013	9/16/2013	9/16/2013	10/15/2013	10/15/2013	11/15/2013	11/15/2013	12/17/2013	12/17/2013	1/16/2014	1/16/2014	2/14/2014	2/14/2014	3/17/2014	3/17/2014	4/21/2014
		Limits*																				
	Isopropylbenzene	N/A	NA	2.0 U	NA	2.0 U	NA	2.0 U	NA	2.0 U	NA	2.0 U	NA	4.0 U	NA	2.0 U	NA	2.0 U	NA	2.0 U	NA	2.0 U
	p-Isopropyltoluene	N/A	NA	2.0 U	NA	2.0 U	NA	2.0 U	NA	2.0 U	NA	2.0 U	NA	4.0 U	NA	2.0 U	NA	2.0 U	NA	2.0 U	NA	2.0 U
	Naphthalene	N/A	NA	2.0 U	NA	2.0 U	NA	2.0 U	NA	2.0 U	NA	2.0 U	NA	4.0 U	NA	2.0 U	NA	2.0 U	NA	2.0 U	NA	2.0 U
	n-Propylbenzene	N/A	NA	2.0 U	NA	2.0 U	NA	2.0 U	NA	2.0 U	NA	2.0 U	NA	4.0 U	NA	2.0 U	NA	2.0 U	NA	2.0 U	NA	2.0 U
	1,2,3-Trichlorobenzene	N/A	NA	2.0 U	NA	2.0 U	NA	2.0 U	NA	2.0 U	NA	2.0 U	NA	4.0 U	NA	2.0 U	NA	2.0 U	NA	2.0 U	NA	2.0 U
	1,2,4-Trichlorobenzene	N/A	NA	**5.8**	NA	**5.0**	NA	**4.8**	NA	**4.8**	NA	**4.5**	NA	4.0 U	NA	**4.5**	NA	**5.0**	NA	**3.0**	NA	2.0 U
	1,3,5-Trimethylbenzene	N/A	NA	2.0 U	NA	2.0 U	NA	2.0 U	NA	2.0 U	NA	2.0 U	NA	4.0 U	NA	2.0 U	NA	2.0 U	NA	2.0 U	NA	2.0 U
	1,2,4-Trimethylbenzene	N/A	NA	2.0 U	NA	2.0 U	NA	2.0 U	NA	2.0 U	NA	2.0 U	NA	4.0 U	NA	2.0 U	NA	2.0 U	NA	2.0 U	NA	2.0 U
	Ethyl ether	N/A	NA	2.0 U	NA	2.0 U	NA	2.0 U	NA	2.0 U	NA	2.0 U	NA	4.0 U	NA	2.0 U	NA	2.0 U	NA	2.0 U	NA	2.0 U
	Isopropyl Ether	N/A	NA	2.0 U	NA	2.0 U	NA	2.0 U	NA	2.0 U	NA	2.0 U	NA	4.0 U	NA	2.0 U	NA	2.0 U	NA	2.0 U	NA	2.0 U
	Ethyl-Tert-Butyl-Ether	N/A	NA	2.0 U	NA	2.0 U	NA	2.0 U	NA	2.0 U	NA	2.0 U	NA	4.0 U	NA	2.0 U	NA	2.0 U	NA	2.0 U	NA	2.0 U
	Tertiary-Amyl Methyl Ether	N/A	NA	2.0 U	NA	2.0 U	NA	2.0 U	NA	2.0 U	NA	2.0 U	NA	4.0 U	NA	2.0 U	NA	2.0 U	NA	2.0 U	NA	2.0 U
	1,4-Dioxane	N/A	NA	250 U	NA	250 U	NA	250 U	NA	250 U	NA	250 U	NA	500 U	NA	250 U	NA	250 U	NA	250 U	NA	250 U
VOCs - TICs																						
(ug/L)	Sulfur Dioxide	N/A	NA	NA	NA	NA	NA	NA	NA	NA	NA	NA	NA	NA	NA	NA	NA	NA	NA	NA	NA	NA
	Unknown aldehyde	N/A	NA	NA	NA	NA	NA	NA	NA	NA	NA	NA	NA	NA	NA	NA	NA	NA	NA	NA	NA	NA
	Unknown Substituted Alkanes	N/A	NA	NA	NA	NA	NA	NA	NA	NA	NA	NA	NA	NA	NA	NA	NA	NA	NA	NA	NA	NA
	Unknown Substituted Alkenes	N/A	NA	NA	NA	NA	NA	NA	NA	NA	NA	NA	NA	NA	NA	NA	NA	NA	NA	NA	NA	NA
	Unknown	N/A	NA	NA	NA	NA	NA	NA	NA	NA	NA	NA	NA	NA	NA	NA	NA	NA	NA	NA	NA	NA
PCBs																						
(ug/L)	Aroclor 1016	N/A	0.250 U	1.25 U	0.250 U	5.00 U	0.250 U	1.25 U	0.500 U	1.25 U	1.00 U	2.50 U	0.250 U	1.25 U	0.250 U	1.25 U	0.250 U	2.50 U	0.250 U	2.50 U	0.260 U	0.250 U
	Aroclor 1221	N/A	0.250 U	1.25 U	0.250 U	5.00 U	0.250 U	1.25 U	0.500 U	1.25 U	1.00 U	2.50 U	0.250 U	1.25 U	0.250 U	1.25 U	0.250 U	2.50 U	0.250 U	2.50 U	0.260 U	0.250 U
	Aroclor 1232	N/A	0.250 U	1.25 U	0.250 U	5.00 U	0.250 U	1.25 U	0.500 U	1.25 U	1.00 U	2.50 U	0.250 U	1.25 U	0.250 U	1.25 U	0.250 U	2.50 U	0.250 U	2.50 U	0.260 U	0.250 U
	Aroclor 1242	N/A	0.250 U	1.25 U	0.250 U	**15.3**	0.250 U	1.25 U	0.500 U	1.25 U	1.00 U	2.50 U	0.250 U	1.25 U	0.250 U	1.25 U	0.250 U	2.50 U	0.250 U	**6.52**	0.260 U	0.250 U
	Aroclor 1248	N/A	0.250 U	1.25 U	0.250 U	5.00 U	0.250 U	1.25 U	0.500 U	1.25 U	1.00 U	2.50 U	0.250 U	1.25 U	0.250 U	1.25 U	0.250 U	2.50 U	0.250 U	2.50 U	0.260 U	0.250 U
	Aroclor 1254	N/A	0.250 U	**13.6**	0.250 U	**179**	**5.84**	**21.8**	**7.59**	**40.5**	**10.9**	**88.5**	**1.45**	**25.5**	0.250 U	**28.2**	0.250 U	**57.5**	0.250 U	**30.7**	0.260 U	**3.19**
	Aroclor 1260	N/A	0.250 U	1.25 U	0.250 U	5.00 U	0.250 U	1.25 U	0.500 U	1.25 U	1.00 U	2.50 U	0.250 U	1.25 U	0.250 U	1.25 U	0.250 U	2.50 U	0.250 U	2.50 U	0.260 U	0.250 U
	Aroclor 1262	N/A	0.250 U	1.25 U	0.250 U	5.00 U	0.250 U	1.25 U	0.500 U	1.25 U	1.00 U	2.50 U	0.250 U	1.25 U	0.250 U	1.25 U	0.250 U	2.50 U	0.250 U	2.50 U	0.260 U	0.250 U
	Aroclor 1268	N/A	0.250 U	1.25 U	0.250 U	5.00 U	0.250 U	1.25 U	0.500 U	1.25 U	1.00 U	2.50 U	0.250 U	1.25 U	0.250 U	1.25 U	0.250 U	2.50 U	0.250 U	2.50 U	0.260 U	0.250 U
	Total PCBs	5	0.250 U	**13.6**	0.250 U	**194.3**	**5.84**	**21.8**	**7.59**	**40.5**	**10.9**	**88.5**	**1.45**	**25.5**	0.250 U	**28.2**	0.250 U	**57.5**	0.250 U	**37.22**	0.260 U	**3.19**
Total Petroleum Hydrocarbons																						
(ug/L)	TPH	N/A	200 U	200 U	200 U	200 U	200 U	200 U	200 U	200 U	200 U	**464**	200 U	**226**	200 U	200 U	NA	**245**	200 U	NA	NA	NA

Notes:
ug/L - micrograms per liter.
NJ - Presumptive evidence of compound.
J - Estimated value.
NA - Sample not analyzed for the listed analyte.
N/A - Not applicable.
U - Compound was not detected at specified quantitation limit.
Values in **Bold** indicate the compound was detected.
VOCs - Volatile Organic Compounds.
PCBs - Polychlorinated Biphenyls.
TICs - Tentatively identified compounds.
* - City of New Bedford Industrial Discharge Permit number S-123.
^ - 0.45 micron filtration done in field; 0.20 and 2.0 micron filtration performed in lab.

Table 3
Summary of Hydraulic Control System Results for Water Samples - 2012 through 2014
New Bedford High School
New Bedford, Massachusetts

Analysis	Analyte	Sample Port:	**SP-2**	**SP-3**	**SP-5**						**SP-6**												
		Sample ID:	PRE BAG FILTER	POST BAG FILTER	POST CLAY BED	PRE CARBON	POST CLAY BED	POST CLAY BED	POST CLAY	POST CLAY FILTER	INTRA CARBON	INTRA CARBON	INTRA CARBON	INTRA CARBON	INTRA CARBON	INTRA-CARBON	INTRA-CARBON	INTRA-CARBON	INTRA-CARBON	INTRA-CARBON	INTRA-CARBON	INTRA-CARBON	INTRA-CARBON
		Filter Size (micron)^:	N/A	N/A	N/A	N/A	N/A	N/A	N/A	N/A	N/A	N/A	N/A	N/A	N/A	N/A	N/A	N/A	N/A	N/A	N/A	N/A	N/A
		Sample Date:	3/27/2012	3/20/2012	3/27/2012	4/3/2012	4/10/2012	4/17/2012	5/14/2012	6/11/2012	3/27/2012	4/3/2012	4/10/2012	4/17/2012	5/14/2012	6/11/2012	7/16/2012	8/21/2012	9/18/2012	10/18/2012	11/21/2012	12/12/2012	1/15/2013
		Limits*																					
VOCs																							
(ug/L)	Methylene chloride	N/A	NA	400 U	NA	NA	NA	NA	NA	NA	2.0 U	2.0 U	2.0 U	2.0 U	2.0 U	2.0 U	2.0 U	2.0 U	2.0 U	2.0 U	8.0 U	10 U	4.0 U
	1,1-Dichloroethane	N/A	NA	200 U	NA	NA	NA	NA	NA	NA	1.0 U	1.0 U	1.0 U	1.0 U	1.0 U	1.0 U	1.0 U	1.0 U	1.0 U	1.0 U	4.0 U	5.0 U	2.0 U
	Chloroform	N/A	NA	200 U	NA	NA	NA	NA	NA	NA	1.0 U	1.0 U	1.0 U	1.0 U	1.0 U	1.0 U	1.0 U	1.0 U	1.0 U	1.0 U	4.0 U	5.0 U	2.0 U
	Carbon tetrachloride	N/A	NA	200 U	NA	NA	NA	NA	NA	NA	1.0 U	1.0 U	1.0 U	1.0 U	1.0 U	1.0 U	1.0 U	1.0 U	1.0 U	1.0 U	4.0 U	5.0 U	2.0 U
	1,2-Dichloropropane	N/A	NA	200 U	NA	NA	NA	NA	NA	NA	1.0 U	1.0 U	1.0 U	1.0 U	1.0 U	1.0 U	1.0 U	1.0 U	1.0 U	1.0 U	4.0 U	5.0 U	2.0 U
	Dibromochloromethane	N/A	NA	200 U	NA	NA	NA	NA	NA	NA	1.0 U	1.0 U	1.0 U	1.0 U	1.0 U	1.0 U	1.0 U	1.0 U	1.0 U	1.0 U	4.0 U	5.0 U	2.0 U
	1,1,2-Trichloroethane	N/A	NA	200 U	NA	NA	NA	NA	NA	NA	1.0 U	1.0 U	1.0 U	1.0 U	1.0 U	1.0 U	1.0 U	1.0 U	1.0 U	1.0 U	4.0 U	5.0 U	2.0 U
	Tetrachloroethene	N/A	NA	200 U	NA	NA	NA	NA	NA	NA	1.0 U	1.0 U	1.0 U	1.0 U	1.0 U	1.0 U	1.0 U	1.0 U	1.0 U	1.0 U	4.0 U	5.0 U	2.0 U
	Chlorobenzene	N/A	NA	200 U	NA	NA	NA	NA	NA	NA	1.0 U	1.0 U	1.0 U	1.0 U	1.0 U	1.0 U	1.0 U	1.0 U	1.0 U	1.0 U	4.0 U	5.0 U	2.0 U
	Trichlorofluoromethane	N/A	NA	400 U	NA	NA	NA	NA	NA	NA	2.0 U	2.0 U	2.0 U	2.0 U	2.0 U	2.0 U	2.0 U	2.0 U	2.0 U	2.0 U	8.0 U	10 U	4.0 U
	1,2-Dichloroethane	N/A	NA	200 U	NA	NA	NA	NA	NA	NA	1.0 U	1.0 U	1.0 U	1.0 U	1.0 U	1.0 U	1.0 U	1.0 U	1.0 U	1.0 U	4.0 U	5.0 U	2.0 U
	1,1,1-Trichloroethane	N/A	NA	200 U	NA	NA	NA	NA	NA	NA	1.0 U	1.0 U	1.0 U	1.0 U	1.0 U	1.0 U	1.0 U	1.0 U	1.0 U	1.0 U	4.0 U	5.0 U	2.0 U
	Bromodichloromethane	N/A	NA	200 U	NA	NA	NA	NA	NA	NA	1.0 U	1.0 U	1.0 U	1.0 U	1.0 U	1.0 U	1.0 U	1.0 U	1.0 U	1.0 U	4.0 U	5.0 U	2.0 U
	trans-1,3-Dichloropropene	N/A	NA	100 U	NA	NA	NA	NA	NA	NA	0.50 U	0.50 U	0.50 U	0.50 U	0.50 U	0.50 U	0.50 U	0.50 U	0.50 U	0.50 U	2.0 U	2.5 U	1.0 U
	cis-1,3-Dichloropropene	N/A	NA	100 U	NA	NA	NA	NA	NA	NA	0.50 U	0.50 U	0.50 U	0.50 U	0.50 U	0.50 U	0.50 U	0.50 U	0.50 U	0.50 U	2.0 U	2.5 U	1.0 U
	1,1-Dichloropropene	N/A	NA	400 U	NA	NA	NA	NA	NA	NA	2.0 U	2.0 U	2.0 U	2.0 U	2.0 U	2.0 U	2.0 U	2.0 U	2.0 U	2.0 U	8.0 U	10 U	4.0 U
	Bromoform	N/A	NA	400 U	NA	NA	NA	NA	NA	NA	2.0 U	2.0 U	2.0 U	2.0 U	2.0 U	2.0 U	2.0 U	2.0 U	2.0 U	2.0 U	8.0 U	10 U	4.0 U
	1,1,2,2-Tetrachloroethane	N/A	NA	200 U	NA	NA	NA	NA	NA	NA	1.0 U	1.0 U	1.0 U	1.0 U	1.0 U	1.0 U	1.0 U	1.0 U	1.0 U	1.0 U	4.0 U	5.0 U	2.0 U
	Benzene	N/A	NA	100 U	NA	NA	NA	NA	NA	NA	0.50 U	0.50 U	0.50 U	0.50 U	0.50 U	0.50 U	0.50 U	0.50 U	0.50 U	0.50 U	2.0 U	2.5 U	1.0 U
	Toluene	N/A	NA	200 U	NA	NA	NA	NA	NA	NA	1.0 U	1.0 U	1.0 U	1.0 U	1.0 U	1.0 U	1.0 U	1.0 U	1.0 U	1.0 U	4.0 U	5.0 U	2.0 U
	Ethylbenzene	N/A	NA	200 U	NA	NA	NA	NA	NA	NA	1.0 U	1.0 U	1.0 U	1.0 U	1.0 U	1.0 U	1.0 U	1.0 U	1.0 U	1.0 U	4.0 U	5.0 U	2.0 U
	Chloromethane	N/A	NA	400 U	NA	NA	NA	NA	NA	NA	2.0 U	2.0 U	2.0 U	2.0 U	2.0 U	2.0 U	2.0 U	2.0 U	2.0 U	2.0 U	8.0 U	10 U	4.0 U
	Bromomethane	N/A	NA	400 U	NA	NA	NA	NA	NA	NA	2.0 U	2.0 U	2.0 U	2.0 U	2.0 U	2.0 U	2.0 U	2.0 U	2.0 U	2.0 U	8.0 U	10 U	4.0 U
	Vinyl chloride	N/A	NA	**280**	NA	NA	NA	NA	NA	NA	1.0 U	1.0 U	1.0 U	1.0 U	**3.1**	**12**	**57**	**61**	**90**	**98**	**59**	**28**	**12**
	Chloroethane	N/A	NA	400 U	NA	NA	NA	NA	NA	NA	2.0 U	2.0 U	2.0 U	2.0 U	2.0 U	2.0 U	2.0 U	2.0 U	2.0 U	2.0 U	8.0 U	10 U	4.0 U
	1,1-Dichloroethene	N/A	NA	200 U	NA	NA	NA	NA	NA	NA	1.0 U	1.0 U	1.0 U	1.0 U	1.0 U	1.0 U	1.0 U	1.0 U	1.0 U	1.0 U	4.0 U	5.0 U	2.0 U
	trans-1,2-Dichloroethene	N/A	NA	**810**	NA	NA	NA	NA	NA	NA	1.0 U	1.0 U	1.0 U	1.0 U	**4.3**	1.0 U	1.0 U	1.0 U	1.0 U	1.0 U	4.0 U	5.0 U	**3.8**
	Trichloroethene	N/A	NA	**15,000**	NA	NA	NA	NA	NA	NA	1.0 U	1.0 U	1.0 U	1.0 U	**7.9**	1.0 U	1.0 U	1.0 U	1.0 U	1.0 U	4.0 U	5.0 U	2.0 U
	1,2-Dichlorobenzene	N/A	NA	200 U	NA	NA	NA	NA	NA	NA	1.0 U	1.0 U	1.0 U	1.0 U	1.0 U	1.0 U	1.0 U	1.0 U	1.0 U	1.0 U	4.0 U	5.0 U	2.0 U
	1,3-Dichlorobenzene	N/A	NA	200 U	NA	NA	NA	NA	NA	NA	1.0 U	1.0 U	1.0 U	1.0 U	1.0 U	1.0 U	1.0 U	1.0 U	1.0 U	1.0 U	4.0 U	5.0 U	2.0 U
	1,4-Dichlorobenzene	N/A	NA	200 U	NA	NA	NA	NA	NA	NA	1.0 U	1.0 U	1.0 U	1.0 U	1.0 U	1.0 U	1.0 U	1.0 U	1.0 U	1.0 U	4.0 U	5.0 U	2.0 U
	Methyl tert butyl ether	N/A	NA	400 U	NA	NA	NA	NA	NA	NA	2.0 U	2.0 U	2.0 U	2.0 U	2.0 U	2.0 U	2.0 U	2.0 U	2.0 U	2.0 U	8.0 U	10 U	4.0 U
	p/m-Xylene	N/A	NA	400 U	NA	NA	NA	NA	NA	NA	2.0 U	2.0 U	2.0 U	2.0 U	2.0 U	2.0 U	2.0 U	2.0 U	2.0 U	2.0 U	8.0 U	10 U	4.0 U
	o-Xylene	N/A	NA	200 U	NA	NA	NA	NA	NA	NA	1.0 U	1.0 U	1.0 U	1.0 U	1.0 U	1.0 U	1.0 U	1.0 U	1.0 U	1.0 U	4.0 U	5.0 U	2.0 U
	cis-1,2-Dichloroethene	N/A	NA	**3,000**	NA	NA	NA	NA	NA	NA	1.0 U	1.0 U	1.0 U	1.0 U	**17**	1.0 U	1.0 U	1.0 U	1.0 U	1.0 U	**240**	**370**	**620**
	Dibromomethane	N/A	NA	400 U	NA	NA	NA	NA	NA	NA	2.0 U	2.0 U	2.0 U	2.0 U	2.0 U	2.0 U	2.0 U	2.0 U	2.0 U	2.0 U	8.0 U	10 U	4.0 U
	1,2,3-Trichloropropane	N/A	NA	400 U	NA	NA	NA	NA	NA	NA	2.0 U	2.0 U	2.0 U	2.0 U	2.0 U	2.0 U	2.0 U	2.0 U	2.0 U	2.0 U	8.0 U	10 U	4.0 U
	Styrene	N/A	NA	200 U	NA	NA	NA	NA	NA	NA	1.0 U	1.0 U	1.0 U	1.0 U	1.0 U	1.0 U	1.0 U	1.0 U	1.0 U	1.0 U	4.0 U	5.0 U	2.0 U
	Dichlorodifluoromethane	N/A	NA	400 U	NA	NA	NA	NA	NA	NA	2.0 U	2.0 U	2.0 U	2.0 U	2.0 U	2.0 U	2.0 U	2.0 U	2.0 U	2.0 U	8.0 U	10 U	4.0 U
	Acetone	N/A	NA	1,000 U	NA	NA	NA	NA	NA	NA	5.0 U	5.0 U	5.0 U	5.0 U	5.0 U	5.0 U	5.0 U	5.0 U	5.0 U	5.0 U	20 U	25 U	10 U
	Carbon disulfide	N/A	NA	400 U	NA	NA	NA	NA	NA	NA	2.0 U	2.0 U	2.0 U	2.0 U	2.0 U	2.0 U	2.0 U	2.0 U	2.0 U	2.0 U	8.0 U	10 U	4.0 U
	2-Butanone	N/A	NA	1,000 U	NA	NA	NA	NA	NA	NA	5.0 U	5.0 U	5.0 U	5.0 U	5.0 U	5.0 U	5.0 U	5.0 U	5.0 U	5.0 U	20 U	25 U	10 U
	4-Methyl-2-pentanone	N/A	NA	1,000 U	NA	NA	NA	NA	NA	NA	5.0 U	5.0 U	5.0 U	5.0 U	5.0 U	5.0 U	5.0 U	5.0 U	5.0 U	5.0 U	20 U	25 U	10 U
	2-Hexanone	N/A	NA	1,000 U	NA	NA	NA	NA	NA	NA	5.0 U	5.0 U	5.0 U	5.0 U	5.0 U	5.0 U	5.0 U	5.0 U	5.0 U	5.0 U	20 U	25 U	10 U
	Bromochloromethane	N/A	NA	400 U	NA	NA	NA	NA	NA	NA	2.0 U	2.0 U	2.0 U	2.0 U	2.0 U	2.0 U	2.0 U	2.0 U	2.0 U	2.0 U	8.0 U	10 U	4.0 U
	Tetrahydrofuran	N/A	NA	1,000 U	NA	NA	NA	NA	NA	NA	**8.2**	**8.2**	**9.1**	**8.5**	5.0 U	**12**	**14**	**12**	**16**	**11**	20 U	25 U	10 U
	2,2-Dichloropropane	N/A	NA	400 U	NA	NA	NA	NA	NA	NA	2.0 U	2.0 U	2.0 U	2.0 U	2.0 U	2.0 U	2.0 U	2.0 U	2.0 U	2.0 U	8.0 U	10 U	4.0 U
	1,2-Dibromoethane	N/A	NA	400 U	NA	NA	NA	NA	NA	NA	2.0 U	2.0 U	2.0 U	2.0 U	2.0 U	2.0 U	2.0 U	2.0 U	2.0 U	2.0 U	8.0 U	10 U	4.0 U
	1,3-Dichloropropane	N/A	NA	400 U	NA	NA	NA	NA	NA	NA	2.0 U	2.0 U	2.0 U	2.0 U	2.0 U	2.0 U	2.0 U	2.0 U	2.0 U	2.0 U	8.0 U	10 U	4.0 U
	1,1,1,2-Tetrachloroethane	N/A	NA	200 U	NA	NA	NA	NA	NA	NA	1.0 U	1.0 U	1.0 U	1.0 U	1.0 U	1.0 U	1.0 U	1.0 U	1.0 U	1.0 U	4.0 U	5.0 U	2.0 U
	Bromobenzene	N/A	NA	400 U	NA	NA	NA	NA	NA	NA	2.0 U	2.0 U	2.0 U	2.0 U	2.0 U	2.0 U	2.0 U	2.0 U	2.0 U	2.0 U	8.0 U	10 U	4.0 U
	n-Butylbenzene	N/A	NA	400 U	NA	NA	NA	NA	NA	NA	2.0 U	2.0 U	2.0 U	2.0 U	2.0 U	2.0 U	2.0 U	2.0 U	2.0 U	2.0 U	8.0 U	10 U	4.0 U
	sec-Butylbenzene	N/A	NA	400 U	NA	NA	NA	NA	NA	NA	2.0 U	2.0 U	2.0 U	2.0 U	2.0 U	2.0 U	2.0 U	2.0 U	2.0 U	2.0 U	8.0 U	10 U	4.0 U
	tert-Butylbenzene	N/A	NA	400 U	NA	NA	NA	NA	NA	NA	2.0 U	2.0 U	2.0 U	2.0 U	2.0 U	2.0 U	2.0 U	2.0 U	2.0 U	2.0 U	8.0 U	10 U	4.0 U
	o-Chlorotoluene	N/A	NA	400 U	NA	NA	NA	NA	NA	NA	2.0 U	2.0 U	2.0 U	2.0 U	2.0 U	2.0 U	2.0 U	2.0 U	2.0 U	2.0 U	8.0 U	10 U	4.0 U
	p-Chlorotoluene	N/A	NA	400 U	NA	NA	NA	NA	NA	NA	2.0 U	2.0 U	2.0 U	2.0 U	2.0 U	2.0 U	2.0 U	2.0 U	2.0 U	2.0 U	8.0 U	10 U	4.0 U
	1,2-Dibromo-3-chloropropane	N/A	NA	400 U	NA	NA	NA	NA	NA	NA	2.0 U	2.0 U	2.0 U	2.0 U	2.0 U	2.0 U	2.0 U	2.0 U	2.0 U	2.0 U	8.0 U	10 U	4.0 U
	Hexachlorobutadiene	N/A	NA	120 U	NA	NA	NA	NA	NA	NA	0.60 U	0.60 U	0.60 U	0.60 U	0.60 U	0.60 U	0.60 U	0.60 U	0.60 U	0.60 U	2.4 U	3.0 U	1.2 U

Table 3
Summary of Hydraulic Control System Results for Water Samples - 2012 through 2014
New Bedford High School
New Bedford, Massachusetts

Analysis	Analyte	Sample Port:	**SP-2**	**SP-3**	**SP-5**						**SP-6**												
		Sample ID:	PRE BAG FILTER	POST BAG FILTER	POST CLAY BED	PRE CARBON	POST CLAY BED	POST CLAY BED	POST CLAY	POST CLAY FILTER	INTRA CARBON	INTRA CARBON	INTRA CARBON	INTRA CARBON	INTRA CARBON	INTRA-CARBON	INTRA-CARBON	INTRA-CARBON	INTRA-CARBON	INTRA-CARBON	INTRA-CARBON	INTRA-CARBON	INTRA-CARBON
		Filter Size (micron)^:	N/A	N/A	N/A	N/A	N/A	N/A	N/A	N/A	N/A	N/A	N/A	N/A	N/A	N/A	N/A	N/A	N/A	N/A	N/A	N/A	N/A
		Sample Date:	3/27/2012	3/20/2012	3/27/2012	4/3/2012	4/10/2012	4/17/2012	5/14/2012	6/11/2012	3/27/2012	4/3/2012	4/10/2012	4/17/2012	5/14/2012	6/11/2012	7/16/2012	8/21/2012	9/18/2012	10/18/2012	11/21/2012	12/12/2012	1/15/2013
		Limits*																					
	Isopropylbenzene	N/A	NA	400 U	NA	NA	NA	NA	NA	NA	2.0 U	2.0 U	2.0 U	2.0 U	2.0 U	2.0 U	2.0 U	2.0 U	2.0 U	2.0 U	8.0 U	10 U	4.0 U
	p-Isopropyltoluene	N/A	NA	400 U	NA	NA	NA	NA	NA	NA	2.0 U	2.0 U	2.0 U	2.0 U	2.0 U	2.0 U	2.0 U	2.0 U	2.0 U	2.0 U	8.0 U	10 U	4.0 U
	Naphthalene	N/A	NA	400 U	NA	NA	NA	NA	NA	NA	2.0 U	2.0 U	2.0 U	2.0 U	2.0 U	2.0 U	2.0 U	2.0 U	2.0 U	2.0 U	8.0 U	10 U	4.0 U
	n-Propylbenzene	N/A	NA	400 U	NA	NA	NA	NA	NA	NA	2.0 U	2.0 U	2.0 U	2.0 U	2.0 U	2.0 U	2.0 U	2.0 U	2.0 U	2.0 U	8.0 U	10 U	4.0 U
	1,2,3-Trichlorobenzene	N/A	NA	400 U	NA	NA	NA	NA	NA	NA	2.0 U	2.0 U	2.0 U	2.0 U	2.0 U	2.0 U	2.0 U	2.0 U	2.0 U	2.0 U	8.0 U	10 U	4.0 U
	1,2,4-Trichlorobenzene	N/A	NA	400 U	NA	NA	NA	NA	NA	NA	2.0 U	2.0 U	2.0 U	2.0 U	**2.1**	2.0 U	2.0 U	2.0 U	2.0 U	2.0 U	8.0 U	10 U	4.0 U
	1,3,5-Trimethylbenzene	N/A	NA	400 U	NA	NA	NA	NA	NA	NA	2.0 U	2.0 U	2.0 U	2.0 U	2.0 U	2.0 U	2.0 U	2.0 U	2.0 U	2.0 U	8.0 U	10 U	4.0 U
	1,2,4-Trimethylbenzene	N/A	NA	400 U	NA	NA	NA	NA	NA	NA	2.0 U	2.0 U	2.0 U	2.0 U	2.0 U	2.0 U	2.0 U	2.0 U	2.0 U	2.0 U	8.0 U	10 U	4.0 U
	Ethyl ether	N/A	NA	400 U	NA	NA	NA	NA	NA	NA	2.0 U	2.0 U	2.0 U	2.0 U	2.0 U	2.0 U	2.0 U	2.0 U	2.0 U	2.0 U	8.0 U	10 U	4.0 U
	Isopropyl Ether	N/A	NA	400 U	NA	NA	NA	NA	NA	NA	2.0 U	2.0 U	2.0 U	2.0 U	2.0 U	2.0 U	2.0 U	2.0 U	2.0 U	2.0 U	8.0 U	10 U	4.0 U
	Ethyl-Tert-Butyl-Ether	N/A	NA	400 U	NA	NA	NA	NA	NA	NA	2.0 U	2.0 U	2.0 U	2.0 U	2.0 U	2.0 U	2.0 U	2.0 U	2.0 U	2.0 U	8.0 U	10 U	4.0 U
	Tertiary-Amyl Methyl Ether	N/A	NA	400 U	NA	NA	NA	NA	NA	NA	2.0 U	2.0 U	2.0 U	2.0 U	2.0 U	2.0 U	2.0 U	2.0 U	2.0 U	2.0 U	8.0 U	10 U	4.0 U
	1,4-Dioxane	N/A	NA	50,000 U	NA	NA	NA	NA	NA	NA	250 U	250 U	250 U	250 U	250 U	250 U	250 U	250 U	250 U	250 U	1,000 U	1,200 U	500 U
VOCs - TICs																							
(ug/L)	Sulfur Dioxide	N/A	NA	400 U	NA	NA	NA	NA	NA	NA	NA	NA	NA	NA	NA	NA	NA	NA	NA	NA	NA	NA	NA
	Unknown aldehyde	N/A	NA	400 U	NA	NA	NA	NA	NA	NA	NA	NA	NA	NA	NA	NA	NA	NA	NA	NA	NA	NA	NA
	Unknown Substituted Alkanes	N/A	NA	400 U	NA	NA	NA	NA	NA	NA	NA	NA	NA	NA	NA	NA	NA	NA	NA	NA	NA	NA	NA
	Unknown Substituted Alkenes	N/A	NA	400 U	NA	NA	NA	NA	NA	NA	NA	NA	NA	NA	NA	NA	NA	NA	NA	NA	NA	NA	NA
	Unknown	N/A	NA	50,000 U	NA	NA	NA	NA	NA	NA	NA	NA	NA	NA	NA	NA	NA	NA	NA	NA	NA	NA	NA
PCBs																							
(ug/L)	Aroclor 1016	N/A	12.5 U	1.25 U	0.250 U	0.250 U	0.252 U	0.250 U	0.250 U	0.246 U	NA	NA	NA	NA	NA	NA	0.250 U	0.250 U	0.250 U	0.250 U	0.250 U	0.250 U	0.250 U
	Aroclor 1221	N/A	12.5 U	1.25 U	0.250 U	0.250 U	0.252 U	0.250 U	0.250 U	0.246 U	NA	NA	NA	NA	NA	NA	0.250 U	0.250 U	0.250 U	0.250 U	0.250 U	0.250 U	0.250 U
	Aroclor 1232	N/A	12.5 U	1.25 U	0.250 U	0.250 U	0.252 U	0.250 U	0.250 U	0.246 U	NA	NA	NA	NA	NA	NA	0.250 U	0.250 U	0.250 U	0.250 U	0.250 U	0.250 U	0.250 U
	Aroclor 1242	N/A	12.5 U	1.25 U	0.250 U	0.250 U	0.252 U	0.250 U	0.250 U	0.246 U	NA	NA	NA	NA	NA	NA	0.250 U	0.250 U	0.250 U	0.250 U	0.250 U	0.250 U	0.250 U
	Aroclor 1248	N/A	12.5 U	1.25 U	0.250 U	0.250 U	0.252 U	0.250 U	0.250 U	0.246 U	NA	NA	NA	NA	NA	NA	0.250 U	0.250 U	0.250 U	0.250 U	0.250 U	0.250 U	0.250 U
	Aroclor 1254	N/A	**278**	**18.5**	**2.80**	**2.12**	**1.54**	**0.424**	**0.290**	**4.28**	NA	NA	NA	NA	NA	NA	0.250 U	0.250 U	0.250 U	0.250 U	0.250 U	0.250 U	0.250 U
	Aroclor 1260	N/A	12.5 U	1.25 U	0.250 U	0.250 U	0.252 U	0.250 U	0.250 U	0.246 U	NA	NA	NA	NA	NA	NA	0.250 U	0.250 U	0.250 U	0.250 U	0.250 U	0.250 U	0.250 U
	Aroclor 1262	N/A	12.5 U	1.25 U	0.250 U	0.250 U	0.252 U	0.250 U	0.250 U	0.246 U	NA	NA	NA	NA	NA	NA	0.250 U	0.250 U	0.250 U	0.250 U	0.250 U	0.250 U	0.250 U
	Aroclor 1268	N/A	12.5 U	1.25 U	0.250 U	0.250 U	0.252 U	0.250 U	0.250 U	0.246 U	NA	NA	NA	NA	NA	NA	0.250 U	0.250 U	0.250 U	0.250 U	0.250 U	0.250 U	0.250 U
	Total PCBs	5	**278**	**18.5**	**2.80**	**2.12**	**1.54**	**0.424**	**0.290**	**4.28**	NA	NA	NA	NA	NA	NA	0.250 U	0.250 U	0.250 U	0.250 U	0.250 U	0.250 U	0.250 U
Total Petroleum Hydrocarbons																							
(ug/L)	TPH	N/A	NA	NA	NA	NA	NA	NA	NA	NA	NA	NA	NA	NA	NA	NA	NA	NA	NA	NA	NA	NA	NA

Notes:
ug/L - micrograms per liter.
NJ - Presumptive evidence of compound.
J - Estimated value.
NA - Sample not analyzed for the listed analyte.
N/A - Not applicable.
U - Compound was not detected at specified quantitation limit.
Values in **Bol**d indicate the compound was detected.
VOCs - Volatile Organic Compounds.
PCBs - Polychlorinated Biphenyls.
TICs - Tentatively identified compounds.
* - City of New Bedford Industrial Discharge Permit number S-123.
^ - 0.45 micron filtration done in field; 0.20 and 2.0 micron filtration performed in lab.

Table 3
Summary of Hydraulic Control System Results for Water Samples - 2012 through 2014
New Bedford High School
New Bedford, Massachusetts

Analysis	Analyte	Sample Port:	SP-6										SP-7										
		Sample ID:	INTRA-CARBON	INTRA-CARBON	INTRA-CARBON	INTRA-CARBON	INTRA-CARBON	INTRA-CARBON	INTRA-CARBON	INTRA-CARBON	INTRA-CARBON	INTRA-CARBON	EFFLUENT	EFFLUENT	EFFLUENT	EFFLUENT	EFFLUENT	EFFLUENT	EFFLUENT	EFFLUENT	EFFLUENT	EFFLUENT	EFFLUENT
		Filter Size (micron)^:	N/A	N/A	N/A	N/A	N/A	N/A	N/A	N/A	N/A	N/A	N/A	N/A	N/A	N/A	N/A	N/A	N/A	N/A	N/A	N/A	N/A
		Sample Date:	2/15/2013	3/13/2013	4/16/2013	5/16/2013	6/18/2013	7/30/2013	8/20/2013	9/16/2013	10/15/2013	11/15/2013	3/20/2012	3/27/2012	4/3/2012	4/10/2012	4/17/2012	5/14/2012	6/11/2012	7/16/2012	8/21/2012	9/18/2012	10/18/2012
		Limits*																					
VOCs																							
(ug/L)	Methylene chloride	N/A	8.0 U	2.0 U	NA	10 U	NA	NA	NA	NA	NA	NA	2.0 U	2.0 U	2.0 U	2.0 U	2.0 U	2.0 U	2.0 U	2.0 U	2.0 U	2.0 U	2.0 U
	1,1-Dichloroethane	N/A	4.0 U	1.0 U	NA	5.0 U	NA	NA	NA	NA	NA	NA	1.0 U	1.0 U	1.0 U	1.0 U	1.0 U	1.0 U	1.0 U	1.0 U	1.0 U	1.0 U	1.0 U
	Chloroform	N/A	4.0 U	1.0 U	NA	5.0 U	NA	NA	NA	NA	NA	NA	1.0 U	1.0 U	1.0 U	1.0 U	1.0 U	1.0 U	1.0 U	1.0 U	1.0 U	1.0 U	1.0 U
	Carbon tetrachloride	N/A	4.0 U	1.0 U	NA	5.0 U	NA	NA	NA	NA	NA	NA	1.0 U	1.0 U	1.0 U	1.0 U	1.0 U	1.0 U	1.0 U	1.0 U	1.0 U	1.0 U	1.0 U
	1,2-Dichloropropane	N/A	4.0 U	1.0 U	NA	5.0 U	NA	NA	NA	NA	NA	NA	1.0 U	1.0 U	1.0 U	1.0 U	1.0 U	1.0 U	1.0 U	1.0 U	1.0 U	1.0 U	1.0 U
	Dibromochloromethane	N/A	4.0 U	1.0 U	NA	5.0 U	NA	NA	NA	NA	NA	NA	1.0 U	1.0 U	1.0 U	1.0 U	1.0 U	1.0 U	1.0 U	1.0 U	1.0 U	1.0 U	1.0 U
	1,1,2-Trichloroethane	N/A	4.0 U	1.0 U	NA	5.0 U	NA	NA	NA	NA	NA	NA	1.0 U	1.0 U	1.0 U	1.0 U	1.0 U	1.0 U	1.0 U	1.0 U	1.0 U	1.0 U	1.0 U
	Tetrachloroethene	N/A	4.0 U	1.0 U	NA	5.0 U	NA	NA	NA	NA	NA	NA	1.0 U	1.0 U	1.0 U	1.0 U	1.0 U	1.0 U	1.0 U	1.0 U	1.0 U	1.0 U	1.0 U
	Chlorobenzene	N/A	4.0 U	1.0 U	NA	5.0 U	NA	NA	NA	NA	NA	NA	1.0 U	1.0 U	1.0 U	1.0 U	1.0 U	1.0 U	1.0 U	1.0 U	1.0 U	1.0 U	1.0 U
	Trichlorofluoromethane	N/A	8.0 U	2.0 U	NA	10 U	NA	NA	NA	NA	NA	NA	2.0 U	2.0 U	2.0 U	2.0 U	2.0 U	2.0 U	2.0 U	2.0 U	2.0 U	2.0 U	2.0 U
	1,2-Dichloroethane	N/A	4.0 U	1.0 U	NA	5.0 U	NA	NA	NA	NA	NA	NA	1.0 U	1.0 U	1.0 U	1.0 U	1.0 U	1.0 U	1.0 U	1.0 U	1.0 U	1.0 U	1.0 U
	1,1,1-Trichloroethane	N/A	4.0 U	1.0 U	NA	5.0 U	NA	NA	NA	NA	NA	NA	1.0 U	1.0 U	1.0 U	1.0 U	1.0 U	1.0 U	1.0 U	1.0 U	1.0 U	1.0 U	1.0 U
	Bromodichloromethane	N/A	4.0 U	1.0 U	NA	5.0 U	NA	NA	NA	NA	NA	NA	1.0 U	1.0 U	1.0 U	1.0 U	1.0 U	1.0 U	1.0 U	1.0 U	1.0 U	1.0 U	1.0 U
	trans-1,3-Dichloropropene	N/A	2.0 U	0.50 U	NA	2.5 U	NA	NA	NA	NA	NA	NA	0.50 U	0.50 U	0.50 U	0.50 U	0.50 U	0.50 U	0.50 U	0.50 U	0.50 U	0.50 U	0.50 U
	cis-1,3-Dichloropropene	N/A	2.0 U	0.50 U	NA	2.5 U	NA	NA	NA	NA	NA	NA	0.50 U	0.50 U	0.50 U	0.50 U	0.50 U	0.50 U	0.50 U	0.50 U	0.50 U	0.50 U	0.50 U
	1,1-Dichloropropene	N/A	8.0 U	2.0 U	NA	10 U	NA	NA	NA	NA	NA	NA	2.0 U	2.0 U	2.0 U	2.0 U	2.0 U	2.0 U	2.0 U	2.0 U	2.0 U	2.0 U	2.0 U
	Bromoform	N/A	8.0 U	2.0 U	NA	10 U	NA	NA	NA	NA	NA	NA	2.0 U	2.0 U	2.0 U	2.0 U	2.0 U	2.0 U	2.0 U	2.0 U	2.0 U	2.0 U	2.0 U
	1,1,2,2-Tetrachloroethane	N/A	4.0 U	1.0 U	NA	5.0 U	NA	NA	NA	NA	NA	NA	1.0 U	1.0 U	1.0 U	1.0 U	1.0 U	1.0 U	1.0 U	1.0 U	1.0 U	1.0 U	1.0 U
	Benzene	N/A	2.0 U	0.50 U	NA	2.5 U	NA	NA	NA	NA	NA	NA	0.50 U	0.50 U	0.50 U	0.50 U	0.50 U	0.50 U	0.50 U	0.50 U	0.50 U	0.50 U	0.50 U
	Toluene	N/A	4.0 U	1.0 U	NA	5.0 U	NA	NA	NA	NA	NA	NA	1.0 U	1.0 U	1.0 U	1.0 U	1.0 U	1.0 U	1.0 U	1.0 U	1.0 U	1.0 U	1.0 U
	Ethylbenzene	N/A	4.0 U	1.0 U	NA	5.0 U	NA	NA	NA	NA	NA	NA	1.0 U	1.0 U	1.0 U	1.0 U	1.0 U	1.0 U	1.0 U	1.0 U	1.0 U	1.0 U	1.0 U
	Chloromethane	N/A	8.0 U	2.0 U	NA	10 U	NA	NA	NA	NA	NA	NA	2.0 U	2.0 U	2.0 U	2.0 U	2.0 U	2.0 U	2.0 U	2.0 U	2.0 U	2.0 U	2.0 U
	Bromomethane	N/A	8.0 U	2.0 U	NA	10 U	NA	NA	NA	NA	NA	NA	2.0 U	2.0 U	2.0 U	2.0 U	2.0 U	2.0 U	2.0 U	2.0 U	2.0 U	2.0 U	2.0 U
	Vinyl chloride	N/A	**5.9**	**3.1**	NA	5.0 U	NA	NA	NA	NA	NA	NA	1.0 U	1.0 U	1.0 U	1.0 U	1.0 U	1.0 U	1.0 U	1.0 U	1.0 U	**8.8**	**66**
	Chloroethane	N/A	8.0 U	2.0 U	NA	10 U	NA	NA	NA	NA	NA	NA	2.0 U	2.0 U	2.0 U	2.0 U	2.0 U	2.0 U	2.0 U	2.0 U	2.0 U	2.0 U	2.0 U
	1,1-Dichloroethene	N/A	4.0 U	1.0 U	NA	5.0 U	NA	NA	NA	NA	NA	NA	1.0 U	1.0 U	1.0 U	1.0 U	1.0 U	1.0 U	1.0 U	1.0 U	1.0 U	1.0 U	1.0 U
	trans-1,2-Dichloroethene	N/A	**9.0**	**22**	NA	**86**	NA	NA	NA	NA	NA	NA	1.0 U	1.0 U	1.0 U	1.0 U	1.0 U	1.0 U	1.0 U	1.0 U	1.0 U	1.0 U	1.0 U
	Trichloroethene	N/A	4.0 U	1.0 U	NA	**12**	NA	NA	NA	NA	NA	NA	1.0 U	1.0 U	1.0 U	1.0 U	1.0 U	1.0 U	1.0 U	1.0 U	1.0 U	1.0 U	1.0 U
	1,2-Dichlorobenzene	N/A	4.0 U	1.0 U	NA	5.0 U	NA	NA	NA	NA	NA	NA	1.0 U	1.0 U	1.0 U	1.0 U	1.0 U	1.0 U	1.0 U	1.0 U	1.0 U	1.0 U	1.0 U
	1,3-Dichlorobenzene	N/A	4.0 U	1.0 U	NA	5.0 U	NA	NA	NA	NA	NA	NA	1.0 U	1.0 U	1.0 U	1.0 U	1.0 U	1.0 U	1.0 U	1.0 U	1.0 U	1.0 U	1.0 U
	1,4-Dichlorobenzene	N/A	4.0 U	1.0 U	NA	5.0 U	NA	NA	NA	NA	NA	NA	1.0 U	1.0 U	1.0 U	1.0 U	1.0 U	1.0 U	1.0 U	1.0 U	1.0 U	1.0 U	1.0 U
	Methyl tert butyl ether	N/A	8.0 U	2.0 U	NA	10 U	NA	NA	NA	NA	NA	NA	2.0 U	2.0 U	2.0 U	2.0 U	2.0 U	2.0 U	2.0 U	2.0 U	2.0 U	2.0 U	2.0 U
	p/m-Xylene	N/A	8.0 U	2.0 U	NA	10 U	NA	NA	NA	NA	NA	NA	2.0 U	2.0 U	2.0 U	2.0 U	2.0 U	2.0 U	2.0 U	2.0 U	2.0 U	2.0 U	2.0 U
	o-Xylene	N/A	4.0 U	1.0 U	NA	5.0 U	NA	NA	NA	NA	NA	NA	1.0 U	1.0 U	1.0 U	1.0 U	1.0 U	1.0 U	1.0 U	1.0 U	1.0 U	1.0 U	1.0 U
	cis-1,2-Dichloroethene	N/A	**470**	**380**	NA	**330**	NA	NA	NA	NA	NA	NA	1.0 U	1.0 U	1.0 U	1.0 U	1.0 U	1.0 U	1.0 U	1.0 U	1.0 U	1.0 U	1.0 U
	Dibromomethane	N/A	8.0 U	2.0 U	NA	10 U	NA	NA	NA	NA	NA	NA	2.0 U	2.0 U	2.0 U	2.0 U	2.0 U	2.0 U	2.0 U	2.0 U	2.0 U	2.0 U	2.0 U
	1,2,3-Trichloropropane	N/A	8.0 U	2.0 U	NA	10 U	NA	NA	NA	NA	NA	NA	2.0 U	2.0 U	2.0 U	2.0 U	2.0 U	2.0 U	2.0 U	2.0 U	2.0 U	2.0 U	2.0 U
	Styrene	N/A	4.0 U	1.0 U	NA	5.0 U	NA	NA	NA	NA	NA	NA	1.0 U	1.0 U	1.0 U	1.0 U	1.0 U	1.0 U	1.0 U	1.0 U	1.0 U	1.0 U	1.0 U
	Dichlorodifluoromethane	N/A	8.0 U	2.0 U	NA	10 U	NA	NA	NA	NA	NA	NA	2.0 U	2.0 U	2.0 U	2.0 U	2.0 U	2.0 U	2.0 U	2.0 U	2.0 U	2.0 U	2.0 U
	Acetone	N/A	20 U	5.0 U	NA	25 U	NA	NA	NA	NA	NA	NA	**98**	**17.0**	5.0 U	5.0 U	5.0 U	5.0 U	5.0 U	5.0 U	5.0 U	5.0 U	5.0 U
	Carbon disulfide	N/A	8.0 U	2.0 U	NA	10 U	NA	NA	NA	NA	NA	NA	2.0 U	2.0 U	2.0 U	2.0 U	2.0 U	2.0 U	2.0 U	2.0 U	2.0 U	2.0 U	2.0 U
	2-Butanone	N/A	20 U	5.0 U	NA	25 U	NA	NA	NA	NA	NA	NA	**6.8**	5.0 U	5.0 U	5.0 U	5.0 U	5.0 U	5.0 U	5.0 U	5.0 U	5.0 U	5.0 U
	4-Methyl-2-pentanone	N/A	20 U	5.0 U	NA	25 U	NA	NA	NA	NA	NA	NA	5.0 U	5.0 U	5.0 U	5.0 U	5.0 U	5.0 U	5.0 U	5.0 U	5.0 U	5.0 U	5.0 U
	2-Hexanone	N/A	20 U	5.0 U	NA	25 U	NA	NA	NA	NA	NA	NA	5.0 U	5.0 U	5.0 U	5.0 U	5.0 U	5.0 U	5.0 U	5.0 U	5.0 U	5.0 U	5.0 U
	Bromochloromethane	N/A	8.0 U	2.0 U	NA	10 U	NA	NA	NA	NA	NA	NA	2.0 U	2.0 U	2.0 U	2.0 U	2.0 U	2.0 U	2.0 U	2.0 U	2.0 U	2.0 U	2.0 U
	Tetrahydrofuran	N/A	20 U	5.0 U	NA	10 U	NA	NA	NA	NA	NA	NA	**11.0**	**14.0**	**14.0**	**17.0**	**16.0**	**8.9**	**8.5**	**9.0**	**5.8**	5.0 U	**12**
	2,2-Dichloropropane	N/A	8.0 U	2.0 U	NA	10 U	NA	NA	NA	NA	NA	NA	2.0 U	2.0 U	2.0 U	2.0 U	2.0 U	2.0 U	2.0 U	2.0 U	2.0 U	2.0 U	2.0 U
	1,2-Dibromoethane	N/A	8.0 U	2.0 U	NA	10 U	NA	NA	NA	NA	NA	NA	2.0 U	2.0 U	2.0 U	2.0 U	2.0 U	2.0 U	2.0 U	2.0 U	2.0 U	2.0 U	2.0 U
	1,3-Dichloropropane	N/A	8.0 U	2.0 U	NA	10 U	NA	NA	NA	NA	NA	NA	2.0 U	2.0 U	2.0 U	2.0 U	2.0 U	2.0 U	2.0 U	2.0 U	2.0 U	2.0 U	2.0 U
	1,1,1,2-Tetrachloroethane	N/A	4.0 U	1.0 U	NA	5.0 U	NA	NA	NA	NA	NA	NA	1.0 U	1.0 U	1.0 U	1.0 U	1.0 U	1.0 U	1.0 U	1.0 U	1.0 U	1.0 U	1.0 U
	Bromobenzene	N/A	8.0 U	2.0 U	NA	10 U	NA	NA	NA	NA	NA	NA	2.0 U	2.0 U	2.0 U	2.0 U	2.0 U	2.0 U	2.0 U	2.0 U	2.0 U	2.0 U	2.0 U
	n-Butylbenzene	N/A	8.0 U	2.0 U	NA	10 U	NA	NA	NA	NA	NA	NA	2.0 U	2.0 U	2.0 U	2.0 U	2.0 U	2.0 U	2.0 U	2.0 U	2.0 U	2.0 U	2.0 U
	sec-Butylbenzene	N/A	8.0 U	2.0 U	NA	10 U	NA	NA	NA	NA	NA	NA	2.0 U	2.0 U	2.0 U	2.0 U	2.0 U	2.0 U	2.0 U	2.0 U	2.0 U	2.0 U	2.0 U
	tert-Butylbenzene	N/A	8.0 U	2.0 U	NA	10 U	NA	NA	NA	NA	NA	NA	2.0 U	2.0 U	2.0 U	2.0 U	2.0 U	2.0 U	2.0 U	2.0 U	2.0 U	2.0 U	2.0 U
	o-Chlorotoluene	N/A	8.0 U	2.0 U	NA	10 U	NA	NA	NA	NA	NA	NA	2.0 U	2.0 U	2.0 U	2.0 U	2.0 U	2.0 U	2.0 U	2.0 U	2.0 U	2.0 U	2.0 U
	p-Chlorotoluene	N/A	8.0 U	2.0 U	NA	10 U	NA	NA	NA	NA	NA	NA	2.0 U	2.0 U	2.0 U	2.0 U	2.0 U	2.0 U	2.0 U	2.0 U	2.0 U	2.0 U	2.0 U
	1,2-Dibromo-3-chloropropane	N/A	8.0 U	2.0 U	NA	10 U	NA	NA	NA	NA	NA	NA	2.0 U	2.0 U	2.0 U	2.0 U	2.0 U	2.0 U	2.0 U	2.0 U	2.0 U	2.0 U	2.0 U
	Hexachlorobutadiene	N/A	2.4 U	0.60 U	NA	3.0 U	NA	NA	NA	NA	NA	NA	0.60 U	0.60 U	0.60 U	0.60 U	0.60 U	0.60 U	0.60 U	0.60 U	0.60 U	0.60 U	0.60 U

Table 3
Summary of Hydraulic Control System Results for Water Samples - 2012 through 2014
New Bedford High School
New Bedford, Massachusetts

Analysis	Analyte	Sample Port:	SP-6										SP-7										
		Sample ID:	INTRA-CARBON	INTRA-CARBON	INTRA-CARBON	INTRA-CARBON	INTRA-CARBON	INTRA-CARBON	INTRA-CARBON	INTRA-CARBON	INTRA-CARBON	INTRA-CARBON	EFFLUENT	EFFLUENT	EFFLUENT	EFFLUENT	EFFLUENT	EFFLUENT	EFFLUENT	EFFLUENT	EFFLUENT	EFFLUENT	EFFLUENT
		Filter Size (micron)^:	N/A	N/A	N/A	N/A	N/A	N/A	N/A	N/A	N/A	N/A	N/A	N/A	N/A	N/A	N/A	N/A	N/A	N/A	N/A	N/A	N/A
		Sample Date:	2/15/2013	3/13/2013	4/16/2013	5/16/2013	6/18/2013	7/30/2013	8/20/2013	9/16/2013	10/15/2013	11/15/2013	3/20/2012	3/27/2012	4/3/2012	4/10/2012	4/17/2012	5/14/2012	6/11/2012	7/16/2012	8/21/2012	9/18/2012	10/18/2012
		Limits*																					
	Isopropylbenzene	N/A	8.0 U	2.0 U	NA	10 U	NA	NA	NA	NA	NA	NA	2.0 U	2.0 U	2.0 U	2.0 U	2.0 U	2.0 U	2.0 U	2.0 U	2.0 U	2.0 U	2.0 U
	p-Isopropyltoluene	N/A	8.0 U	2.0 U	NA	10 U	NA	NA	NA	NA	NA	NA	2.0 U	2.0 U	2.0 U	2.0 U	2.0 U	2.0 U	2.0 U	2.0 U	2.0 U	2.0 U	2.0 U
	Naphthalene	N/A	8.0 U	2.0 U	NA	10 U	NA	NA	NA	NA	NA	NA	2.0 U	2.0 U	2.0 U	2.0 U	2.0 U	2.0 U	2.0 U	2.0 U	2.0 U	2.0 U	2.0 U
	n-Propylbenzene	N/A	8.0 U	2.0 U	NA	10 U	NA	NA	NA	NA	NA	NA	2.0 U	2.0 U	2.0 U	2.0 U	2.0 U	2.0 U	2.0 U	2.0 U	2.0 U	2.0 U	2.0 U
	1,2,3-Trichlorobenzene	N/A	8.0 U	2.0 U	NA	10 U	NA	NA	NA	NA	NA	NA	2.0 U	2.0 U	2.0 U	2.0 U	2.0 U	2.0 U	2.0 U	2.0 U	2.0 U	2.0 U	2.0 U
	1,2,4-Trichlorobenzene	N/A	8.0 U	2.0 U	NA	10 U	NA	NA	NA	NA	NA	NA	2.0 U	2.0 U	2.0 U	2.0 U	2.0 U	2.0 U	2.0 U	2.0 U	2.0 U	2.0 U	2.0 U
	1,3,5-Trimethylbenzene	N/A	8.0 U	2.0 U	NA	10 U	NA	NA	NA	NA	NA	NA	2.0 U	2.0 U	2.0 U	2.0 U	2.0 U	2.0 U	2.0 U	2.0 U	2.0 U	2.0 U	2.0 U
	1,2,4-Trimethylbenzene	N/A	8.0 U	2.0 U	NA	10 U	NA	NA	NA	NA	NA	NA	2.0 U	2.0 U	2.0 U	2.0 U	2.0 U	2.0 U	2.0 U	2.0 U	2.0 U	2.0 U	2.0 U
	Ethyl ether	N/A	8.0 U	2.0 U	NA	10 U	NA	NA	NA	NA	NA	NA	2.0 U	2.0 U	2.0 U	2.0 U	2.0 U	2.0 U	2.0 U	2.0 U	2.0 U	2.0 U	2.0 U
	Isopropyl Ether	N/A	8.0 U	2.0 U	NA	10 U	NA	NA	NA	NA	NA	NA	2.0 U	2.0 U	2.0 U	2.0 U	2.0 U	2.0 U	2.0 U	2.0 U	2.0 U	2.0 U	2.0 U
	Ethyl-Tert-Butyl-Ether	N/A	8.0 U	2.0 U	NA	10 U	NA	NA	NA	NA	NA	NA	2.0 U	2.0 U	2.0 U	2.0 U	2.0 U	2.0 U	2.0 U	2.0 U	2.0 U	2.0 U	2.0 U
	Tertiary-Amyl Methyl Ether	N/A	8.0 U	2.0 U	NA	10 U	NA	NA	NA	NA	NA	NA	2.0 U	2.0 U	2.0 U	2.0 U	2.0 U	2.0 U	2.0 U	2.0 U	2.0 U	2.0 U	2.0 U
	1,4-Dioxane	N/A	1,000 U	250 U	NA	1,200 U	NA	NA	NA	NA	NA	NA	250 U	250 U	250 U	250 U	250 U	250 U	250 U	250 U	250 U	250 U	250 U
VOCs - TICs																							
(ug/L)	Sulfur Dioxide	N/A	NA	NA	NA	NA	NA	NA	NA	NA	NA	NA	NA	NA	NA	NA	NA	NA	NA	NA	NA	NA	NA
	Unknown aldehyde	N/A	NA	NA	NA	NA	NA	NA	NA	NA	NA	NA	NA	NA	NA	NA	NA	NA	NA	NA	NA	NA	NA
	Unknown Substituted Alkanes	N/A	NA	NA	NA	NA	NA	NA	NA	NA	NA	NA	NA	NA	NA	NA	NA	NA	NA	NA	NA	NA	NA
	Unknown Substituted Alkenes	N/A	NA	NA	NA	NA	NA	NA	NA	NA	NA	NA	NA	NA	NA	NA	NA	NA	NA	NA	NA	NA	NA
	Unknown	N/A	NA	NA	NA	NA	NA	NA	NA	NA	NA	NA	NA	NA	NA	NA	NA	NA	NA	NA	NA	NA	NA
PCBs																							
(ug/L)	Aroclor 1016	N/A	0.250 U	0.250 U	0.250 U	0.250 U	0.250 U	0.250 U	0.250 U	0.250 U	0.250 U	0.250 U	0.250 U	0.250 U	0.250 U	0.252 U	0.250 U	0.250 U	0.248 U	0.250 U	0.250 U	0.250 U	0.250 U
	Aroclor 1221	N/A	0.250 U	0.250 U	0.250 U	0.250 U	0.250 U	0.250 U	0.250 U	0.250 U	0.250 U	0.250 U	0.250 U	0.250 U	0.250 U	0.252 U	0.250 U	0.250 U	0.248 U	0.250 U	0.250 U	0.250 U	0.250 U
	Aroclor 1232	N/A	0.250 U	0.250 U	0.250 U	0.250 U	0.250 U	0.250 U	0.250 U	0.250 U	0.250 U	0.250 U	0.250 U	0.250 U	0.250 U	0.252 U	0.250 U	0.250 U	0.248 U	0.250 U	0.250 U	0.250 U	0.250 U
	Aroclor 1242	N/A	0.250 U	0.250 U	0.250 U	0.250 U	0.250 U	0.250 U	0.250 U	0.250 U	0.250 U	0.250 U	0.250 U	0.250 U	0.250 U	0.252 U	0.250 U	0.250 U	0.248 U	0.250 U	0.250 U	0.250 U	0.250 U
	Aroclor 1248	N/A	0.250 U	0.250 U	0.250 U	0.250 U	0.250 U	0.250 U	0.250 U	0.250 U	0.250 U	0.250 U	0.250 U	0.250 U	0.250 U	0.252 U	0.250 U	0.250 U	0.248 U	0.250 U	0.250 U	0.250 U	0.250 U
	Aroclor 1254	N/A	0.250 U	0.250 U	0.250 U	0.250 U	0.250 U	0.250 U	0.250 U	0.250 U	0.250 U	0.250 U	0.250 U	0.250 U	0.250 U	0.252 U	0.250 U	0.250 U	0.248 U	0.250 U	0.250 U	0.250 U	0.250 U
	Aroclor 1260	N/A	0.250 U	0.250 U	0.250 U	0.250 U	0.250 U	0.250 U	0.250 U	0.250 U	0.250 U	0.250 U	0.250 U	0.250 U	0.250 U	0.252 U	0.250 U	0.250 U	0.248 U	0.250 U	0.250 U	0.250 U	0.250 U
	Aroclor 1262	N/A	0.250 U	0.250 U	0.250 U	0.250 U	0.250 U	0.250 U	0.250 U	0.250 U	0.250 U	0.250 U	0.250 U	0.250 U	0.250 U	0.252 U	0.250 U	0.250 U	0.248 U	0.250 U	0.250 U	0.250 U	0.250 U
	Aroclor 1268	N/A	0.250 U	0.250 U	0.250 U	0.250 U	0.250 U	0.250 U	0.250 U	0.250 U	0.250 U	0.250 U	0.250 U	0.250 U	0.250 U	0.252 U	0.250 U	0.250 U	0.248 U	0.250 U	0.250 U	0.250 U	0.250 U
	Total PCBs	5	0.250 U	0.250 U	0.250 U	0.250 U	0.250 U	0.250 U	0.250 U	0.250 U	0.250 U	0.250 U	0.250 U	0.250 U	0.250 U	0.252 U	0.250 U	0.250 U	0.248 U	0.250 U	0.250 U	0.250 U	0.250 U
Total Petroleum Hydrocarbons																							
(ug/L)	TPH	N/A	NA	NA	NA	NA	NA	NA	NA	NA	NA	NA	NA	NA	NA	NA	NA	NA	NA	NA	NA	NA	NA

Notes:
ug/L - micrograms per liter.
NJ - Presumptive evidence of compound.
J - Estimated value.
NA - Sample not analyzed for the listed analyte.
N/A - Not applicable.
U - Compound was not detected at specified quantitation limit.
Values in **Bol**d indicate the compound was detected.
VOCs - Volatile Organic Compounds.
PCBs - Polychlorinated Biphenyls.
TICs - Tentatively identified compounds.
* - City of New Bedford Industrial Discharge Permit number S-123.
^ - 0.45 micron filtration done in field; 0.20 and 2.0 micron filtration performed in lab.

Table 3
Summary of Hydraulic Control System Results for Water Samples - 2012 through 2014
New Bedford High School
New Bedford, Massachusetts

Analysis	Analyte	Sample Port:	SP-7																	
		Sample ID:	EFFLUENT	EFFLUENT	EFFLUENT	EFFLUENT	EFFLUENT	EFFLUENT	EFFLUENT	EFFLUENT	EFFLUENT	EFFLUENT	EFFLUENT	EFFLUENT	EFFLUENT	EFFLUENT	EFFLUENT	EFFLUENT	EFFLUENT	EFFLUENT
		Filter Size (micron)^:	N/A	N/A	N/A	N/A	N/A	N/A	N/A	N/A	N/A	N/A	N/A	N/A	N/A	N/A	N/A	N/A	N/A	N/A
		Sample Date:	11/21/2012	12/12/2012	1/15/2013	2/15/2013	3/13/2013	4/16/2013	5/16/2013	6/18/2013	7/30/2013	8/20/2013	9/16/2013	10/15/2013	11/15/2013	12/17/2013	1/16/2014	2/14/2014	3/17/2014	4/21/2014
		Limits*																		
VOCs																				
(ug/L)	Methylene chloride	N/A	2.0 U	2.0 U	2.0 U	2.0 U	2.0 U	2.0 U	2.0 U	2.0 U	2.0 U	2.0 U	10.0 U	10.0 U	2.0 U	4.0 U	10.0 U	4.0 U	10.0 U	2.0 U
	1,1-Dichloroethane	N/A	1.0 U	1.0 U	1.0 U	1.0 U	1.0 U	1.0 U	1.0 U	1.0 U	1.0 U	1.0 U	5.0 U	5.0 U	1.0 U	2.0 U	5.0 U	2.0 U	5.0 U	1.0 U
	Chloroform	N/A	1.0 U	1.0 U	1.0 U	1.0 U	1.0 U	1.0 U	1.0 U	1.0 U	1.0 U	1.0 U	5.0 U	5.0 U	1.0 U	2.0 U	5.0 U	2.0 U	5.0 U	1.0 U
	Carbon tetrachloride	N/A	1.0 U	1.0 U	1.0 U	1.0 U	1.0 U	1.0 U	1.0 U	1.0 U	1.0 U	1.0 U	5.0 U	5.0 U	1.0 U	2.0 U	5.0 U	2.0 U	5.0 U	1.0 U
	1,2-Dichloropropane	N/A	1.0 U	1.0 U	1.0 U	1.0 U	1.0 U	1.0 U	1.0 U	1.0 U	1.0 U	1.0 U	5.0 U	5.0 U	1.0 U	2.0 U	5.0 U	2.0 U	5.0 U	1.0 U
	Dibromochloromethane	N/A	1.0 U	1.0 U	1.0 U	1.0 U	1.0 U	1.0 U	1.0 U	1.0 U	1.0 U	1.0 U	5.0 U	5.0 U	1.0 U	2.0 U	5.0 U	2.0 U	5.0 U	1.0 U
	1,1,2-Trichloroethane	N/A	1.0 U	1.0 U	1.0 U	1.0 U	1.0 U	1.0 U	1.0 U	1.0 U	1.0 U	1.0 U	5.0 U	5.0 U	1.0 U	2.0 U	5.0 U	2.0 U	5.0 U	1.0 U
	Tetrachloroethene	N/A	1.0 U	1.0 U	1.0 U	1.0 U	1.0 U	1.0 U	1.0 U	1.0 U	1.0 U	1.0 U	5.0 U	5.0 U	1.0 U	2.0 U	5.0 U	2.0 U	5.0 U	1.0 U
	Chlorobenzene	N/A	1.0 U	1.0 U	1.0 U	1.0 U	1.0 U	1.0 U	1.0 U	1.0 U	1.0 U	1.0 U	5.0 U	5.0 U	1.0 U	2.0 U	5.0 U	2.0 U	5.0 U	1.0 U
	Trichlorofluoromethane	N/A	2.0 U	2.0 U	2.0 U	2.0 U	2.0 U	2.0 U	2.0 U	2.0 U	2.0 U	2.0 U	10.0 U	10.0 U	2.0 U	4.0 U	10.0 U	4.0 U	10.0 U	2.0 U
	1,2-Dichloroethane	N/A	1.0 U	1.0 U	1.0 U	1.0 U	1.0 U	1.0 U	1.0 U	1.0 U	1.0 U	1.0 U	5.0 U	5.0 U	1.0 U	2.0 U	5.0 U	2.0 U	5.0 U	1.0 U
	1,1,1-Trichloroethane	N/A	1.0 U	1.0 U	1.0 U	1.0 U	1.0 U	1.0 U	1.0 U	1.0 U	1.0 U	1.0 U	5.0 U	5.0 U	1.0 U	2.0 U	5.0 U	2.0 U	5.0 U	1.0 U
	Bromodichloromethane	N/A	1.0 U	1.0 U	1.0 U	1.0 U	1.0 U	1.0 U	1.0 U	1.0 U	1.0 U	1.0 U	5.0 U	5.0 U	1.0 U	2.0 U	5.0 U	2.0 U	5.0 U	1.0 U
	trans-1,3-Dichloropropene	N/A	0.50 U	0.50 U	0.50 U	0.50 U	0.50 U	0.50 U	0.50 U	0.50 U	0.50 U	0.50 U	2.5 U	2.5 U	0.50 U	1.0 U	2.5 U	1.0 U	2.5 U	0.50 U
	cis-1,3-Dichloropropene	N/A	0.50 U	0.50 U	0.50 U	0.50 U	0.50 U	0.50 U	0.50 U	0.50 U	0.50 U	0.50 U	2.5 U	2.5 U	0.50 U	1.0 U	2.5 U	1.0 U	2.5 U	0.50 U
	1,1-Dichloropropene	N/A	2.0 U	2.0 U	2.0 U	2.0 U	2.0 U	2.0 U	2.0 U	2.0 U	2.0 U	2.0 U	10.0 U	10.0 U	2.0 U	4.0 U	10.0 U	4.0 U	10.0 U	2.0 U
	Bromoform	N/A	2.0 U	2.0 U	2.0 U	2.0 U	2.0 U	2.0 U	2.0 U	2.0 U	2.0 U	2.0 U	10.0 U	10.0 U	2.0 U	4.0 U	10.0 U	4.0 U	10.0 U	2.0 U
	1,1,2,2-Tetrachloroethane	N/A	1.0 U	1.0 U	1.0 U	1.0 U	1.0 U	1.0 U	1.0 U	1.0 U	1.0 U	1.0 U	5.0 U	5.0 U	1.0 U	2.0 U	5.0 U	2.0 U	5.0 U	1.0 U
	Benzene	N/A	0.50 U	0.50 U	0.50 U	0.50 U	0.50 U	0.50 U	0.50 U	0.50 U	0.50 U	**0.58**	2.5 U	2.5 U	0.50 U	1.0 U	2.5 U	1.0 U	2.5 U	0.50 U
	Toluene	N/A	1.0 U	1.0 U	1.0 U	1.0 U	1.0 U	1.0 U	1.0 U	1.0 U	1.0 U	1.0 U	5.0 U	5.0 U	1.0 U	2.0 U	5.0 U	2.0 U	5.0 U	1.0 U
	Ethylbenzene	N/A	1.0 U	1.0 U	1.0 U	1.0 U	1.0 U	1.0 U	1.0 U	1.0 U	1.0 U	1.0 U	5.0 U	5.0 U	1.0 U	2.0 U	5.0 U	2.0 U	5.0 U	1.0 U
	Chloromethane	N/A	2.0 U	2.0 U	2.0 U	2.0 U	2.0 U	2.0 U	2.0 U	2.0 U	2.0 U	2.0 U	10.0 U	10.0 U	2.0 U	4.0 U	10.0 U	4.0 U	10.0 U	2.0 U
	Bromomethane	N/A	2.0 U	2.0 U	2.0 U	2.0 U	2.0 U	2.0 U	2.0 U	2.0 U	2.0 U	2.0 U	10.0 U	10.0 U	2.0 U	4.0 U	10.0 U	4.0 U	10.0 U	2.0 U
	Vinyl chloride	N/A	**99**	**85**	**61**	**25**	**14**	**4.8**	**3.4**	**2.0**	1.0 U	1.0 U	5.0 U	5.0 U	1.0 U	2.0 U	5.0 U	2.0 U	5.0 U	1.0 U
	Chloroethane	N/A	2.0 U	2.0 U	2.0 U	2.0 U	2.0 U	2.0 U	2.0 U	2.0 U	2.0 U	2.0 U	10.0 U	10.0 U	2.0 U	4.0 U	10.0 U	4.0 U	10.0 U	2.0 U
	1,1-Dichloroethene	N/A	1.0 U	1.0 U	1.0 U	1.0 U	1.0 U	1.0 U	1.0 U	1.0 U	1.0 U	1.0 U	5.0 U	5.0 U	1.0 U	2.0 U	5.0 U	2.0 U	5.0 U	1.0 U
	trans-1,2-Dichloroethene	N/A	1.0 U	1.0 U	1.0 U	1.0 U	1.0 U	1.0 U	**1.8**	**5.1**	**5.2**	**7.2**	**8.6**	**12**	**14**	**13**	**18**	**26**	**26**	**25**
	Trichloroethene	N/A	1.0 U	1.0 U	1.0 U	1.0 U	1.0 U	1.0 U	1.0 U	1.0 U	1.0 U	1.0 U	5.0 U	5.0 U	1.0 U	2.0 U	5.0 U	2.0 U	5.0 U	1.0 U
	1,2-Dichlorobenzene	N/A	1.0 U	1.0 U	1.0 U	1.0 U	1.0 U	1.0 U	1.0 U	1.0 U	1.0 U	1.0 U	5.0 U	5.0 U	1.0 U	2.0 U	5.0 U	2.0 U	5.0 U	1.0 U
	1,3-Dichlorobenzene	N/A	1.0 U	1.0 U	1.0 U	1.0 U	1.0 U	1.0 U	1.0 U	1.0 U	1.0 U	1.0 U	5.0 U	5.0 U	1.0 U	2.0 U	5.0 U	2.0 U	5.0 U	1.0 U
	1,4-Dichlorobenzene	N/A	1.0 U	1.0 U	1.0 U	1.0 U	1.0 U	1.0 U	1.0 U	1.0 U	1.0 U	1.0 U	5.0 U	5.0 U	1.0 U	2.0 U	5.0 U	2.0 U	5.0 U	1.0 U
	Methyl tert butyl ether	N/A	2.0 U	2.0 U	2.0 U	2.0 U	2.0 U	2.0 U	2.0 U	2.0 U	2.0 U	2.0 U	10.0 U	10.0 U	2.0 U	4.0 U	10.0 U	4.0 U	10.0 U	2.0 U
	p/m-Xylene	N/A	2.0 U	2.0 U	2.0 U	2.0 U	2.0 U	2.0 U	2.0 U	2.0 U	2.0 U	2.0 U	10.0 U	10.0 U	2.0 U	4.0 U	10.0 U	4.0 U	10 U	2.0 U
	o-Xylene	N/A	1.0 U	1.0 U	1.0 U	1.0 U	1.0 U	1.0 U	1.0 U	1.0 U	1.0 U	1.0 U	5.0 U	5.0 U	1.0 U	2.0 U	5.0 U	2.0 U	5.0 U	1.0 U
	cis-1,2-Dichloroethene	N/A	1.0 U	1.0 U	1.0 U	1.0 U	**1.8**	**130**	**300**	**440**	**360**	**290**	**260**	**240**	**280**	**190**	**230**	**250**	**170**	**100**
	Dibromomethane	N/A	2.0 U	2.0 U	2.0 U	2.0 U	2.0 U	2.0 U	2.0 U	2.0 U	2.0 U	2.0 U	10.0 U	10.0 U	2.0 U	4.0 U	10.0 U	4.0 U	10.0 U	2.0 U
	1,2,3-Trichloropropane	N/A	2.0 U	2.0 U	2.0 U	2.0 U	2.0 U	2.0 U	2.0 U	2.0 U	2.0 U	2.0 U	10.0 U	10.0 U	2.0 U	4.0 U	10.0 U	4.0 U	10.0 U	2.0 U
	Styrene	N/A	1.0 U	1.0 U	1.0 U	1.0 U	1.0 U	1.0 U	1.0 U	1.0 U	1.0 U	1.0 U	5.0 U	5.0 U	1.0 U	2.0 U	5.0 U	2.0 U	5.0 U	1.0 U
	Dichlorodifluoromethane	N/A	2.0 U	2.0 U	2.0 U	2.0 U	2.0 U	2.0 U	2.0 U	2.0 U	2.0 U	2.0 U	10.0 U	10.0 U	2.0 U	4.0 U	10.0 U	4.0 U	10.0 U	2.0 U
	Acetone	N/A	5.0 U	5.0 U	5.0 U	5.0 U	5.0 U	5.0 U	5.0 U	5.0 U	5.0 U	5.0 U	25.0 U	25.0 U	5.0 U	10 U	25 U	10 U	25 U	5.0 U
	Carbon disulfide	N/A	2.0 U	2.0 U	2.0 U	2.0 U	2.0 U	2.0 U	2.0 U	2.0 U	2.0 U	2.0 U	10.0 U	10.0 U	2.0 U	4.0 U	10.0 U	4.0 U	10.0 U	2.0 U
	2-Butanone	N/A	5.0 U	5.0 U	5.0 U	5.0 U	5.0 U	5.0 U	5.0 U	5.0 U	5.0 U	5.0 U	25.0 U	25.0 U	5.0 U	10 U	25 U	10 U	25 U	5.0 U
	4-Methyl-2-pentanone	N/A	5.0 U	5.0 U	5.0 U	5.0 U	5.0 U	5.0 U	5.0 U	5.0 U	5.0 U	5.0 U	25.0 U	25.0 U	5.0 U	10 U	25 U	10 U	25 U	5.0 U
	2-Hexanone	N/A	5.0 U	5.0 U	5.0 U	5.0 U	5.0 U	5.0 U	5.0 U	5.0 U	5.0 U	5.0 U	25.0 U	25.0 U	5.0 U	10 U	25 U	10 U	25 U	5.0 U
	Bromochloromethane	N/A	2.0 U	2.0 U	2.0 U	2.0 U	2.0 U	2.0 U	2.0 U	2.0 U	2.0 U	2.0 U	10.0 U	10.0 U	2.0 U	4.0 U	10.0 U	4.0 U	10.0 U	2.0 U
	Tetrahydrofuran	N/A	**8.8**	**6.5**	5.0 U	**5.1**	**6.6**	5.0 U	2.0 U	**5.1**	2.0 U	**3.8**	10.0 U	10.0 U	2.0 U	4.0 U	**48.0**	**8.8**	10.0 U	2.0 U
	2,2-Dichloropropane	N/A	2.0 U	2.0 U	2.0 U	2.0 U	2.0 U	2.0 U	2.0 U	2.0 U	2.0 U	2.0 U	10.0 U	10.0 U	2.0 U	4.0 U	10.0 U	4.0 U	10.0 U	2.0 U
	1,2-Dibromoethane	N/A	2.0 U	2.0 U	2.0 U	2.0 U	2.0 U	2.0 U	2.0 U	2.0 U	2.0 U	2.0 U	10.0 U	10.0 U	2.0 U	4.0 U	10.0 U	4.0 U	10.0 U	2.0 U
	1,3-Dichloropropane	N/A	2.0 U	2.0 U	2.0 U	2.0 U	2.0 U	2.0 U	2.0 U	2.0 U	2.0 U	2.0 U	10.0 U	10.0 U	2.0 U	4.0 U	10.0 U	4.0 U	10.0 U	2.0 U
	1,1,1,2-Tetrachloroethane	N/A	1.0 U	1.0 U	1.0 U	1.0 U	1.0 U	1.0 U	1.0 U	1.0 U	1.0 U	1.0 U	5.0 U	5.0 U	1.0 U	2.0 U	5.0 U	2.0 U	5.0 U	1.0 U
	Bromobenzene	N/A	2.0 U	2.0 U	2.0 U	2.0 U	2.0 U	2.0 U	2.0 U	2.0 U	2.0 U	2.0 U	10.0 U	10.0 U	2.0 U	4.0 U	10.0 U	4.0 U	10.0 U	2.0 U
	n-Butylbenzene	N/A	2.0 U	2.0 U	2.0 U	2.0 U	2.0 U	2.0 U	2.0 U	2.0 U	2.0 U	2.0 U	10.0 U	10.0 U	2.0 U	4.0 U	10.0 U	4.0 U	10.0 U	2.0 U
	sec-Butylbenzene	N/A	2.0 U	2.0 U	2.0 U	2.0 U	2.0 U	2.0 U	2.0 U	2.0 U	2.0 U	2.0 U	10.0 U	10.0 U	2.0 U	4.0 U	10.0 U	4.0 U	10.0 U	2.0 U
	tert-Butylbenzene	N/A	2.0 U	2.0 U	2.0 U	2.0 U	2.0 U	2.0 U	2.0 U	2.0 U	2.0 U	2.0 U	10.0 U	10.0 U	2.0 U	4.0 U	10.0 U	4.0 U	10.0 U	2.0 U
	o-Chlorotoluene	N/A	2.0 U	2.0 U	2.0 U	2.0 U	2.0 U	2.0 U	2.0 U	2.0 U	2.0 U	2.0 U	10.0 U	10.0 U	2.0 U	4.0 U	10.0 U	4.0 U	10.0 U	2.0 U
	p-Chlorotoluene	N/A	2.0 U	2.0 U	2.0 U	2.0 U	2.0 U	2.0 U	2.0 U	2.0 U	2.0 U	2.0 U	10.0 U	10.0 U	2.0 U	4.0 U	10.0 U	4.0 U	10.0 U	2.0 U
	1,2-Dibromo-3-chloropropane	N/A	2.0 U	2.0 U	2.0 U	2.0 U	2.0 U	2.0 U	2.0 U	2.0 U	2.0 U	2.0 U	10.0 U	10.0 U	2.0 U	4.0 U	10.0 U	4.0 U	10.0 U	2.0 U
	Hexachlorobutadiene	N/A	0.60 U	0.60 U	0.60 U	0.60 U	0.60 U	0.60 U	0.60 U	0.60 U	0.60 U	0.60 U	3.0 U	3.0 U	0.60 U	1.2 U	3.0 U	1.2 U	3.0 U	0.60 U

Table 3
Summary of Hydraulic Control System Results for Water Samples - 2012 through 2014
New Bedford High School
New Bedford, Massachusetts

Analysis	Analyte	Sample Port:	SP-7																	
		Sample ID:	EFFLUENT	EFFLUENT	EFFLUENT	EFFLUENT	EFFLUENT	EFFLUENT	EFFLUENT	EFFLUENT	EFFLUENT	EFFLUENT	EFFLUENT	EFFLUENT	EFFLUENT	EFFLUENT	EFFLUENT	EFFLUENT	EFFLUENT	EFFLUENT
		Filter Size (micron)^:	N/A	N/A	N/A	N/A	N/A	N/A	N/A	N/A	N/A	N/A	N/A	N/A	N/A	N/A	N/A	N/A	N/A	N/A
		Sample Date:	11/21/2012	12/12/2012	1/15/2013	2/15/2013	3/13/2013	4/16/2013	5/16/2013	6/18/2013	7/30/2013	8/20/2013	9/16/2013	10/15/2013	11/15/2013	12/17/2013	1/16/2014	2/14/2014	3/17/2014	4/21/2014
		Limits*																		
	Isopropylbenzene	N/A	2.0 U	2.0 U	2.0 U	2.0 U	2.0 U	2.0 U	2.0 U	2.0 U	2.0 U	2.0 U	10.0 U	10.0 U	2.0 U	4.0 U	10.0 U	4.0 U	10.0 U	2.0 U
	p-Isopropyltoluene	N/A	2.0 U	2.0 U	2.0 U	2.0 U	2.0 U	2.0 U	2.0 U	2.0 U	2.0 U	2.0 U	10.0 U	10.0 U	2.0 U	4.0 U	10.0 U	4.0 U	10.0 U	2.0 U
	Naphthalene	N/A	2.0 U	2.0 U	2.0 U	2.0 U	2.0 U	2.0 U	2.0 U	2.0 U	2.0 U	2.0 U	10.0 U	10.0 U	2.0 U	4.0 U	10.0 U	4.0 U	10.0 U	2.0 U
	n-Propylbenzene	N/A	2.0 U	2.0 U	2.0 U	2.0 U	2.0 U	2.0 U	2.0 U	2.0 U	2.0 U	2.0 U	10.0 U	10.0 U	2.0 U	4.0 U	10.0 U	4.0 U	10.0 U	2.0 U
	1,2,3-Trichlorobenzene	N/A	2.0 U	2.0 U	2.0 U	2.0 U	2.0 U	2.0 U	2.0 U	2.0 U	2.0 U	2.0 U	10.0 U	10.0 U	2.0 U	4.0 U	10.0 U	4.0 U	10.0 U	2.0 U
	1,2,4-Trichlorobenzene	N/A	2.0 U	2.0 U	2.0 U	2.0 U	2.0 U	2.0 U	2.0 U	2.0 U	2.0 U	2.0 U	10.0 U	10.0 U	2.0 U	4.0 U	10.0 U	4.0 U	10.0 U	2.0 U
	1,3,5-Trimethylbenzene	N/A	2.0 U	2.0 U	2.0 U	2.0 U	2.0 U	2.0 U	2.0 U	2.0 U	2.0 U	2.0 U	10.0 U	10.0 U	2.0 U	4.0 U	10.0 U	4.0 U	10.0 U	2.0 U
	1,2,4-Trimethylbenzene	N/A	2.0 U	2.0 U	2.0 U	2.0 U	2.0 U	2.0 U	2.0 U	2.0 U	2.0 U	2.0 U	10.0 U	10.0 U	2.0 U	4.0 U	10.0 U	4.0 U	10.0 U	2.0 U
	Ethyl ether	N/A	2.0 U	2.0 U	2.0 U	2.0 U	2.0 U	2.0 U	2.0 U	2.0 U	2.0 U	2.0 U	10.0 U	10.0 U	2.0 U	4.0 U	10.0 U	4.0 U	10.0 U	2.0 U
	Isopropyl Ether	N/A	2.0 U	2.0 U	2.0 U	2.0 U	2.0 U	2.0 U	2.0 U	2.0 U	2.0 U	2.0 U	10.0 U	10.0 U	2.0 U	4.0 U	10.0 U	4.0 U	10.0 U	2.0 U
	Ethyl-Tert-Butyl-Ether	N/A	2.0 U	2.0 U	2.0 U	2.0 U	2.0 U	2.0 U	2.0 U	2.0 U	2.0 U	2.0 U	10.0 U	10.0 U	2.0 U	4.0 U	10.0 U	4.0 U	10.0 U	2.0 U
	Tertiary-Amyl Methyl Ether	N/A	2.0 U	2.0 U	2.0 U	2.0 U	2.0 U	2.0 U	2.0 U	2.0 U	2.0 U	2.0 U	10.0 U	10.0 U	2.0 U	4.0 U	10.0 U	4.0 U	10.0 U	2.0 U
	1,4-Dioxane	N/A	250 U	250 U	250 U	250 U	250 U	250 U	250 U	250 U	250 U	250 U	1,200 U	1,200 U	250 U	500 U	1,200 U	500 U	1,200 U	250 U
VOCs - TICs																				
(ug/L)	Sulfur Dioxide	N/A	NA	NA	NA	NA	NA	NA	NA	NA	NA	NA	NA	NA	NA	NA	NA	NA	NA	NA
	Unknown aldehyde	N/A	NA	NA	NA	NA	NA	NA	NA	NA	NA	NA	NA	NA	NA	NA	NA	NA	NA	NA
	Unknown Substituted Alkanes	N/A	NA	NA	NA	NA	NA	NA	NA	NA	NA	NA	NA	NA	NA	NA	NA	NA	NA	NA
	Unknown Substituted Alkenes	N/A	NA	NA	NA	NA	NA	NA	NA	NA	NA	NA	NA	NA	NA	NA	NA	NA	NA	NA
	Unknown	N/A	NA	NA	NA	NA	NA	NA	NA	NA	NA	NA	NA	NA	NA	NA	NA	NA	NA	NA
PCBs																				
(ug/L)	Aroclor 1016	N/A	0.250 U	0.250 U	0.250 U	0.250 U	0.250 U	0.250 U	0.250 U	0.250 U	0.250 U	0.250 U	0.250 U	0.250 U	0.250 U	0.250 U	0.250 U	0.250 U	0.250 U	0.250 U
	Aroclor 1221	N/A	0.250 U	0.250 U	0.250 U	0.250 U	0.250 U	0.250 U	0.250 U	0.250 U	0.250 U	0.250 U	0.250 U	0.250 U	0.250 U	0.250 U	0.250 U	0.250 U	0.250 U	0.250 U
	Aroclor 1232	N/A	0.250 U	0.250 U	0.250 U	0.250 U	0.250 U	0.250 U	0.250 U	0.250 U	0.250 U	0.250 U	0.250 U	0.250 U	0.250 U	0.250 U	0.250 U	0.250 U	0.250 U	0.250 U
	Aroclor 1242	N/A	0.250 U	0.250 U	0.250 U	0.250 U	0.250 U	0.250 U	0.250 U	0.250 U	0.250 U	0.250 U	0.250 U	0.250 U	0.250 U	0.250 U	0.250 U	0.250 U	0.250 U	0.250 U
	Aroclor 1248	N/A	0.250 U	0.250 U	0.250 U	0.250 U	0.250 U	0.250 U	0.250 U	0.250 U	0.250 U	0.250 U	0.250 U	0.250 U	0.250 U	0.250 U	0.250 U	0.250 U	0.250 U	0.250 U
	Aroclor 1254	N/A	0.250 U	0.250 U	0.250 U	0.250 U	0.250 U	0.250 U	0.250 U	0.250 U	0.250 U	0.250 U	0.250 U	0.250 U	0.250 U	0.250 U	0.250 U	0.250 U	0.250 U	0.250 U
	Aroclor 1260	N/A	0.250 U	0.250 U	0.250 U	0.250 U	0.250 U	0.250 U	0.250 U	0.250 U	0.250 U	0.250 U	0.250 U	0.250 U	0.250 U	0.250 U	0.250 U	0.250 U	0.250 U	0.250 U
	Aroclor 1262	N/A	0.250 U	0.250 U	0.250 U	0.250 U	0.250 U	0.250 U	0.250 U	0.250 U	0.250 U	0.250 U	0.250 U	0.250 U	0.250 U	0.250 U	0.250 U	0.250 U	0.250 U	0.250 U
	Aroclor 1268	N/A	0.250 U	0.250 U	0.250 U	0.250 U	0.250 U	0.250 U	0.250 U	0.250 U	0.250 U	0.250 U	0.250 U	0.250 U	0.250 U	0.250 U	0.250 U	0.250 U	0.250 U	0.250 U
	Total PCBs	5	0.250 U	0.250 U	0.250 U	0.250 U	0.250 U	0.250 U	0.250 U	0.250 U	0.250 U	0.250 U	0.250 U	0.250 U	0.250 U	0.250 U	0.250 U	0.250 U	0.250 U	0.250 U
Total Petroleum Hydrocarbons																				
(ug/L)	TPH	N/A	NA	NA	NA	NA	NA	NA	NA	NA	NA	NA	NA	NA	NA	NA	NA	NA	NA	NA

Notes:
ug/L - micrograms per liter.
NJ - Presumptive evidence of compound.
J - Estimated value.
NA - Sample not analyzed for the listed analyte.
N/A - Not applicable.
U - Compound was not detected at specified quantitation limit.
Values in **Bol**d indicate the compound was detected.
VOCs - Volatile Organic Compounds.
PCBs - Polychlorinated Biphenyls.
TICs - Tentatively identified compounds.
* - City of New Bedford Industrial Discharge Permit number S-123.
^ - 0.45 micron filtration done in field; 0.20 and 2.0 micron filtration performed in lab.

Table 4
Summary of Analytical Results for Quarterly Discharge Monitoring Samples -- 2012 through 2014
New Bedford High School
New Bedford, Massachusetts

Analysis	Analyte	Sample ID:	EFFLUENT (GRAB)								EFFLUENT (COMPOSITE)								E-1 THROUGH E-12 EFFLUENT	EFF. C-1 THRU C-4	EFFLUENT ROUND 1 THRU 4					
		Sample Date:	6/11/2012	9/19/2012	12/12/2012	3/14/2013	6/19/2013	9/17/2013	12/18/2013	3/17/2014	6/12/2012	9/20/2012	12/12/2012	3/14/2013	6/19/2013	9/17/2013	12/18/2013	3/17/2014	6/12/2012	9/20/2012	12/12/2012	3/14/2013	6/18/2013	9/17/2013	12/18/2013	3/17/2014
		Daily Maximum*																								
VOCs																										
(ug/L)	Methylene chloride	N/A	NA	5.0 U	5.0 U	NA	25 U	25 U	12 U	NA	NA	NA	NA	NA	NA	NA	NA	NA	5.0 U	5.0 U	5.0 U	5.0 U	5.0 U	5.0 U	10 U	5.0 U
	1,1-Dichloroethane	N/A	NA	1.5 U	1.5 U	NA	7.5 U	7.5 U	3.8 U	NA	NA	NA	NA	NA	NA	NA	NA	NA	1.5 U	1.5 U	1.5 U	1.5 U	1.5 U	1.5 U	3.0 U	1.5 U
	Chloroform	N/A	NA	1.5 U	1.5 U	NA	7.5 U	7.5 U	3.8 U	NA	NA	NA	NA	NA	NA	NA	NA	NA	1.5 U	1.5 U	1.5 U	1.5 U	1.5 U	1.5 U	3.0 U	1.5 U
	Carbon tetrachloride	N/A	NA	1.0 U	1.0 U	NA	5.0 U	5.0 U	2.5 U	NA	NA	NA	NA	NA	NA	NA	NA	NA	1.0 U	1.0 U	1.0 U	1.0 U	1.0 U	1.0 U	2.0 U	1.0 U
	1,2-Dichloropropane	N/A	NA	3.5 U	3.5 U	NA	18 U	18 U	8.8 U	NA	NA	NA	NA	NA	NA	NA	NA	NA	3.5 U	3.5 U	3.5 U	3.5 U	3.5 U	3.5 U	7.0 U	3.5 U
	Dibromochloromethane	N/A	NA	1.0 U	1.0 U	NA	5 U	5.0 U	2.5 U	NA	NA	NA	NA	NA	NA	NA	NA	NA	1.0 U	1.0 U	1.0 U	1.0 U	1.0 U	1.0 U	2.0 U	1.0 U
	1,1,2-Trichloroethane	N/A	NA	1.5 U	1.5 U	NA	7.5 U	7.5 U	3.8 U	NA	NA	NA	NA	NA	NA	NA	NA	NA	1.5 U	1.5 U	1.5 U	1.5 U	1.5 U	1.5 U	3.0 U	1.5 U
	2-Chloroethylvinyl ether	N/A	NA	10 U	10 U	NA	50 U	50 U	50 U	NA	NA	NA	NA	NA	NA	NA	NA	NA	10 U	10 U	10 U	10 U	10 U	10 U	40 U	10 U
	Tetrachloroethene	N/A	NA	1.5 U	1.5 U	NA	7.5 U	7.5 U	3.8 U	NA	NA	NA	NA	NA	NA	NA	NA	NA	1.5 U	1.5 U	1.5 U	1.5 U	1.5 U	1.5 U	3.0 U	1.5 U
	Chlorobenzene	N/A	NA	3.5 U	3.5 U	NA	18 U	18 U	8.8 U	NA	NA	NA	NA	NA	NA	NA	NA	NA	3.5 U	3.5 U	3.5 U	3.5 U	3.5 U	3.5 U	7.0 U	3.5 U
	Trichlorofluoromethane	N/A	NA	5.0 U	5.0 U	NA	25 U	25 U	12 U	NA	NA	NA	NA	NA	NA	NA	NA	NA	5.0 U	5.0 U	5.0 U	5.0 U	5.0 U	5.0 U	10 U	5.0 U
	1,2-Dichloroethane	N/A	NA	1.5 U	1.5 U	NA	7.5 U	7.5 U	3.8 U	NA	NA	NA	NA	NA	NA	NA	NA	NA	1.5 U	1.5 U	1.5 U	1.5 U	1.5 U	1.5 U	3.0 U	1.5 U
	1,1,1-Trichloroethane	N/A	NA	2.0 U	2.0 U	NA	10 U	10 U	5.0 U	NA	NA	NA	NA	NA	NA	NA	NA	NA	2.0 U	2.0 U	2.0 U	2.0 U	2.0 U	2.0 U	4.0 U	2.0 U
	Bromodichloromethane	N/A	NA	1.0 U	1.0 U	NA	5.0 U	5.0 U	2.5 U	NA	NA	NA	NA	NA	NA	NA	NA	NA	1.0 U	1.0 U	1.0 U	1.0 U	1.0 U	1.0 U	2.0 U	1.0 U
	trans-1,3-Dichloropropene	N/A	NA	1.5 U	1.5 U	NA	7.5 U	7.5 U	3.8 U	NA	NA	NA	NA	NA	NA	NA	NA	NA	1.5 U	1.5 U	1.5 U	1.5 U	1.5 U	1.5 U	3.0 U	1.5 U
	cis-1,3-Dichloropropene	N/A	NA	1.5 U	1.5 U	NA	7.5 U	7.5 U	3.8 U	NA	NA	NA	NA	NA	NA	NA	NA	NA	1.5 U	1.5 U	1.5 U	1.5 U	1.5 U	1.5 U	3.0 U	1.5 U
	Bromoform	N/A	NA	1.0 U	1.0 U	NA	5.0 U	5.0 U	2.5 U	NA	NA	NA	NA	NA	NA	NA	NA	NA	1.0 U	1.0 U	1.0 U	1.0 U	1.0 U	1.0 U	2.0 U	1.0 U
	1,1,2,2-Tetrachloroethane	N/A	NA	1.0 U	1.0 U	NA	5.0 U	5.0 U	2.5 U	NA	NA	NA	NA	NA	NA	NA	NA	NA	1.0 U	1.0 U	1.0 U	1.0 U	1.0 U	1.0 U	2.0 U	1.0 U
	Benzene	N/A	NA	1.0 U	1.0 U	NA	5.0 U	5.0 U	2.5 U	NA	NA	NA	NA	NA	NA	NA	NA	NA	1.0 U	1.0 U	1.0 U	1.0 U	1.0 U	1.0 U	2.0 U	1.0 U
	Toluene	N/A	NA	1.0 U	1.0 U	NA	5.0 U	5.0 U	2.5 U	NA	NA	NA	NA	NA	NA	NA	NA	NA	1.0 U	1.0 U	1.0 U	1.0 U	1.0 U	1.0 U	2.0 U	1.0 U
	Ethylbenzene	N/A	NA	1.0 U	1.0 U	NA	5.0 U	5.0 U	2.5 U	NA	NA	NA	NA	NA	NA	NA	NA	NA	1.0 U	1.0 U	1.0 U	1.0 U	1.0 U	1.0 U	2.0 U	1.0 U
	Chloromethane	N/A	NA	10 U	10 U	NA	50 U	25 U	12 U	NA	NA	NA	NA	NA	NA	NA	NA	NA	10 U	10 U	10 U	10 U	10 U	5 U	10 U	5.0 U
	Bromomethane	N/A	NA	5.0 U	5.0 U	NA	25 U	25 U	12 U	NA	NA	NA	NA	NA	NA	NA	NA	NA	5.0 U	5.0 U	5.0 U	5.0 U	5.0 U	5.0 U	10 U	5.0 U
	Vinyl chloride	N/A	NA	**7.9**	**62**	NA	10 U	10 U	2.5 U	NA	NA	NA	NA	NA	NA	NA	NA	NA	2.0 U	**6.1**	**48**	**12**	2.0 U	2.0 U	2.0 U	1.0 U
	Chloroethane	N/A	NA	2.0 U	2.0 U	NA	10 U	10 U	5.0 U	NA	NA	NA	NA	NA	NA	NA	NA	NA	2.0 U	2.0 U	2.0 U	2.0 U	2.0 U	2.0 U	4.0 U	2.0 U
	1,1-Dichloroethene	N/A	NA	1.0 U	1.0 U	NA	5.0 U	5.0 U	2.5 U	NA	NA	NA	NA	NA	NA	NA	NA	NA	1.0 U	1.0 U	1.0 U	1.0 U	1.0 U	1.0 U	2.0 U	1.0 U
	trans-1,2-Dichloroethene	N/A	NA	1.5 U	1.5 U	NA	7.5 U	**8.3**	**14**	NA	NA	NA	NA	NA	NA	NA	NA	NA	1.5 U	1.5 U	1.5 U	1.5 U	1.5 U	7.7	**14**	**20**
	cis-1,2-Dichloroethene	N/A	NA	1.0 U	1.0 U	NA	**320**	**260**	**180**	NA	NA	NA	NA	NA	NA	NA	NA	NA	1.0 U	1.0 U	1.0 U	1.0 U	**270**	**230**	**180**	**140**
	Trichloroethene	N/A	NA	1.0 U	1.0 U	NA	5.0 U	5.0 U	2.5 U	NA	NA	NA	NA	NA	NA	NA	NA	NA	1.0 U	1.0 U	1.0 U	1.0 U	1.0 U	1.0 U	2.0 U	1.0 U
	1,2-Dichlorobenzene	N/A	NA	5.0 U	5.0 U	NA	25 U	25 U	12 U	NA	NA	NA	NA	NA	NA	NA	NA	NA	5.0 U	5.0 U	5.0 U	5.0 U	5.0 U	5.0 U	10 U	5.0 U
	1,3-Dichlorobenzene	N/A	NA	5.0 U	5.0 U	NA	25 U	25 U	12 U	NA	NA	NA	NA	NA	NA	NA	NA	NA	5.0 U	5.0 U	5.0 U	5.0 U	5.0 U	5.0 U	10 U	5.0 U
	1,4-Dichlorobenzene	N/A	NA	5.0 U	5.0 U	NA	25 U	25 U	12 U	NA	NA	NA	NA	NA	NA	NA	NA	NA	5.0 U	5.0 U	5.0 U	5.0 U	5.0 U	5.0 U	10 U	5.0 U
	p/m-Xylene	N/A	NA	2.0 U	2.0 U	NA	10 U	10 U	5.0 U	NA	NA	NA	NA	NA	NA	NA	NA	NA	2.0 U	2.0 U	2.0 U	2.0 U	2.0 U	2.0 U	4.0 U	2.0 U
	o-xylene	N/A	NA	1.0 U	1.0 U	NA	5.0 U	5.0 U	2.5 U	NA	NA	NA	NA	NA	NA	NA	NA	NA	1.0 U	1.0 U	1.0 U	1.0 U	1.0 U	1.0 U	2.0 U	1.0 U
	Xylene (Total)	N/A	NA	2.0 U	2.0 U	NA	10 U	10 U	5.0 U	NA	NA	NA	NA	NA	NA	NA	NA	NA	2.0 U	2.0 U	2.0 U	2.0 U	2.0 U	2.0 U	4.0 U	1.0 U
	Styrene	N/A	NA	1.0 U	1.0 U	NA	5.0 U	5.0 U	2.5 U	NA	NA	NA	NA	NA	NA	NA	NA	NA	1.0 U	1.0 U	1.0 U	1.0 U	1.0 U	1.0 U	2.0 U	1.0 U
	Acetone	N/A	NA	10 U	10 U	NA	50 U	50 U	25 U	NA	NA	NA	NA	NA	NA	NA	NA	NA	10 U	10 U	10 U	10 U	10 U	10 U	20 U	10 U
	Carbon disulfide	N/A	NA	5.0 U	5.0 U	NA	25 U	25 U	12 U	NA	NA	NA	NA	NA	NA	NA	NA	NA	5.0 U	5.0 U	5.0 U	5.0 U	5.0 U	5.0 U	10 U	5.0 U
	2-Butanone	N/A	NA	10 U	10 U	NA	50 U	50 U	25 U	NA	NA	NA	NA	NA	NA	NA	NA	NA	10 U	10 U	10 U	10 U	10 U	10 U	20 U	10 U
	Vinyl acetate	N/A	NA	20 U	10 U	NA	50 U	50 U	25 U	NA	NA	NA	NA	NA	NA	NA	NA	NA	20 U	20 U	10 U	10 U	10 U	10 U	20 U	10 U
	4-Methyl-2-pentanone	N/A	NA	10 U	10 U	NA	50 U	50 U	25 U	NA	NA	NA	NA	NA	NA	NA	NA	NA	10 U	10 U	10 U	10 U	10 U	10 U	20 U	10 U
	2-Hexanone	N/A	NA	10 U	10 U	NA	50 U	50 U	25 U	NA	NA	NA	NA	NA	NA	NA	NA	NA	10 U	10 U	10 U	10 U	10 U	10 U	20 U	10 U
	Acrolein	N/A	NA	8.0 U	8.0 U	NA	40 U	40 U	20 U	NA	NA	NA	NA	NA	NA	NA	NA	NA	8.0 U	8.0 U	8.0 U	8.0 U	8.0 U	8.0 U	16 U	8.0 U
	Acrylonitrile	N/A	NA	10 U	10 U	NA	50 U	50 U	25 U	NA	NA	NA	NA	NA	NA	NA	NA	NA	10 U	10 U	10 U	10 U	10 U	10 U	20 U	10 U
	Dibromomethane	N/A	NA	1.0 U	1.0 U	NA	5.0 U	5.0 U	2.5 U	NA	NA	NA	NA	NA	NA	NA	NA	NA	1.0 U	1.0 U	1.0 U	1.0 U	1.0 U	1.0 U	2.0 U	1.0 U
PCBs																										
(ug/L)	Aroclor 1016	N/A	NA	NA	NA	NA	NA	NA	NA	NA	0.25 U	0.25 U	0.25 U	0.25 U	0.25 U	0.25 U	0.25 U	0.25 U	NA	NA	NA	NA	NA	NA	NA	NA
	Aroclor 1221	N/A	NA	NA	NA	NA	NA	NA	NA	NA	0.25 U	0.25 U	0.25 U	0.25 U	0.25 U	0.25 U	0.25 U	0.25 U	NA	NA	NA	NA	NA	NA	NA	NA
	Aroclor 1232	N/A	NA	NA	NA	NA	NA	NA	NA	NA	0.25 U	0.25 U	0.25 U	0.25 U	0.25 U	0.25 U	0.25 U	0.25 U	NA	NA	NA	NA	NA	NA	NA	NA
	Aroclor 1242	N/A	NA	NA	NA	NA	NA	NA	NA	NA	0.25 U	0.25 U	0.25 U	0.25 U	0.25 U	0.25 U	0.25 U	0.25 U	NA	NA	NA	NA	NA	NA	NA	NA
	Aroclor 1248	N/A	NA	NA	NA	NA	NA	NA	NA	NA	0.25 U	0.25 U	0.25 U	0.25 U	0.25 U	0.25 U	0.25 U	0.25 U	NA	NA	NA	NA	NA	NA	NA	NA
	Aroclor 1254	N/A	NA	NA	NA	NA	NA	NA	NA	NA	0.25 U	0.25 U	0.25 U	0.25 U	0.25 U	0.25 U	0.25 U	0.25 U	NA	NA	NA	NA	NA	NA	NA	NA
	Aroclor 1260	N/A	NA	NA	NA	NA	NA	NA	NA	NA	0.25 U	0.25 U	0.25 U	0.25 U	0.25 U	0.25 U	0.25 U	0.25 U	NA	NA	NA	NA	NA	NA	NA	NA
	Total PCBs	5	NA	NA	NA	NA	NA	NA	NA	NA	0.25 U	0.25 U	0.25 U	0.25 U	0.25 U	0.25 U	0.25 U	0.25 U	NA	NA	NA	NA	NA	NA	NA	NA
General Chemistry																										
(s.u.)	pH	5.5-11.0	**6.0**	**6.1**	**6.7**	**7.4**	**7.1**	**8.2**	**7.9**	**7.2**	NA	NA	NA	NA	NA	NA	NA	NA	NA	NA	NA	NA	NA	NA	NA	NA
(mg/L)	Oil & Grease	100	4.4 U	4.0 U	4.0 U	4.0 U	4.0 U	4.0 U	4.0 U	4.0 U	NA	NA	NA	NA	NA	NA	NA	NA	NA	NA	NA	NA	NA	NA	NA	NA
(mg/L)	Solids, Total Suspended	N/A	NA	NA	NA	NA	5.0 U	NA	NA	NA	5.0 U	**6.5**	5.0 U	5.0 U	5.0 U	5.0 U	5.0 U	5.0 U	NA	NA	NA	NA	NA	NA	NA	NA
(mg/L)	BOD, 5 day	N/A	NA	2.0 U	5.0 U	2.0 U	NA	NA	NA	2.0 U	2.0 U	2.0 U	2.0 U	NA	2.0 U	2.0 U	2.0 U	NA	NA	NA	NA	NA	NA	NA	NA	NA

Notes:
s.u. - Standard unit.
mg/L - milligrams per liter.
ug/L - micrograms per liter.
NA - Sample not analyzed for the listed analyte.
N/A - Not applicable.
U - Compound was not detected at specified quantitation limit.
Values in **Bold** indicate the compound was detected.
VOCs - Volatile Organic Compounds.
PCBs - Polychlorinated Biphenyls.
* - City of New Bedford Industrial Discharge Permit number S-123.

Table 5
Summary of Sub-Slab Vapor Mitigation System Emission Results -- 2012 through 2014
New Bedford High School
New Bedford, Massachusetts

Analysis	Analyte	VSP #:	VSP-1																			
		Sample ID:	Vapor Inlet																			
		Sample Date:	3/27/2012	4/17/2012	5/14/2012	6/11/2012	7/16/2012	8/21/2012	9/18/2012	10/18/2012	11/21/2012	12/12/2012	1/15/2013	2/15/2013	3/13/2013	4/16/2013	5/16/2013	6/18/2013	7/30/2013	8/20/2013	9/16/2013	10/15/2013
		AALs*																				
TO-15																						
(ug/m3)	Vinyl chloride	0.38	0.511 U	**6.29**	**10.5**	**5.21**	**5.85**	**210**	**6.16**	**16.1**	**19.4**	**5.32**	**8.79**	**9.99**	**37.1**	**7.46**	**9.25**	**14.0**	**9.23**	**4.35**	**6.95**	**7.26**
	Bromomethane	2.64	0.777 U	0.777 U	0.777 U	0.777 U	0.777 U	0.777 U	0.777 U	0.777 U	0.777 U	0.777 U	0.777 U	0.777 U	0.078 U	0.078 U	0.777 U	0.777 U	0.777 U	0.777 U	0.777 U	0.777 U
	Acetone	160.54	2.38 U	2.38 U	**3.82**	**2.71**	**6.22**	**6.18**	**5.01**	**9.03**	**93.1**	**3.85**	**3.52**	**4.44**	**6.29**	2.38 U	**38.5**	**18.1**	**10.0**	**6.79**	**36.6**	**8.67**
	1,1-Dichloroethene	0.02	0.793 U	0.793 U	0.793 U	0.793 U	0.793 U	**1.83**	0.793 U	0.793 U	0.793 U	0.793 U	0.793 U	0.793 U	**0.313**	**0.222**	0.793 U	0.793 U	0.793 U	0.793 U	0.793 U	0.793 U
	Methylene chloride	0.24	4.86 U	4.86 U	4.86 U	4.86 U	**9.28**	4.86 U	4.86 U	4.86 U	4.86 U	4.86 U	4.86 U	4.86 U	4.86 U	4.86 U	4.86 U	4.86 U	4.86 U	4.86 U	4.86 U	4.86 U
	trans-1,2-Dichloroethene	107.81[a]	**5.27**	**14.1**	**14.4**	**5.71**	**14.0**	**214**	**40.0**	**55.1**	**67.8**	**37.3**	**35.7**	**44.4**	**27.8**	**34.1**	**26.3**	**30.6**	**22.6**	**10.1**	**14.3**	**13.7**
	1,1-Dichloroethane	NS	0.809 U	0.809 U	0.809 U	0.809 U	0.809 U	0.809 U	0.809 U	0.809 U	0.809 U	0.809 U	0.809 U	0.809 U	0.081 U	0.081 U	0.809 U	0.809 U	0.809 U	0.809 U	0.809 U	0.809 U
	Methyl tert butyl ether	NS	0.721 U	0.721 U	0.721 U	0.721 U	0.721 U	0.721 U	0.721 U	0.721 U	0.721 U	0.721 U	0.721 U	0.721 U	0.072 U	0.072 U	0.721 U	0.721 U	0.721 U	0.721 U	0.721 U	0.721 U
	2-Butanone	10	**4.45**	**9.32**	**2.24**	**1.93**	**2.81**	**5.43**	**9.05**	**2.46**	**1.49**	**1.65**	**1.35**	**1.86**	**1.82**	**0.737**	**2.85**	**2.69**	1.48 U	**1.32**	**11.5**	**1.33**
	cis-1,2-Dichloroethene	107.81[a]	**13.4**	**51.9**	**42.0**	**16.4**	**35.1**	**456**	**82.1**	**141**	**161**	**77.7**	**82.1**	**111**	**46.4**	**76.9**	**59.1**	**63.4**	**59.5**	**28.3**	**38.9**	**37.3**
	Chloroform	0.04	0.977 U	**1.04**	**1.75**	0.977 U	**1.97**	**1.78**	**1.9**	**1.11**	0.977 U	0.977 U	0.977 U	0.977 U	**0.957**	**0.366**	0.977 U	**1.90**	**2.19**	**2.58**	**2.35**	**1.53**
	1,2-Dichloroethane	0.04	0.809 U	0.809 U	0.809 U	0.809 U	0.809 U	0.809 U	0.809 U	0.809 U	0.809 U	0.809 U	0.809 U	0.809 U	0.081 U	0.081 U	0.809 U	0.809 U	0.809 U	0.809 U	0.809 U	0.809 U
	1,1,1-Trichloroethane	1038.37	1.09 U	1.09 U	1.09 U	1.09 U	1.09 U	1.09 U	1.09 U	1.09 U	1.09 U	1.09 U	1.09 U	1.09 U	**0.273**	**0.147**	1.09 U	1.09 U	1.09 U	1.09 U	1.09 U	1.09 U
	Benzene	0.12	**1.50**	**0.716**	0.639 U	0.639 U	0.639 U	0.639 U	0.639 U	**0.639**	0.639 U	0.639 U	0.639 U	0.639 U	**0.364**	0.319 U	0.639 U	0.639 U	0.639 U	0.639 U	0.639 U	0.639 U
	Carbon tetrachloride	0.07	1.26 U	1.26 U	1.26 U	1.26 U	1.26 U	1.26 U	1.26 U	1.26 U	1.26 U	1.26 U	1.26 U	1.26 U	**0.421**	**0.409**	1.26 U	1.26 U	1.26 U	1.26 U	1.26 U	1.26 U
	1,2-Dichloropropane	0.05	0.924 U	0.924 U	0.924 U	0.924 U	0.924 U	0.924 U	0.924 U	0.924 U	0.924 U	0.924 U	0.924 U	0.924 U	0.092 U	0.092 U	0.924 U	0.924 U	0.924 U	0.924 U	0.924 U	0.924 U
	Bromodichloromethane	NS	1.34 U	1.34 U	1.34 U	1.34 U	1.34 U	1.34 U	1.34 U	1.34 U	1.34 U	1.34 U	1.34 U	1.34 U	0.134 U	0.134 U	1.34 U	1.34 U	1.34 U	1.34 U	1.34 U	1.34 U
	1,4-Dioxane	0.24	0.721 U	0.721 U	0.721 U	0.721 U	0.721 U	0.721 U	0.721 U	0.721 U	0.721 U	0.721 U	0.721 U	0.721 U	0.360 U	0.36 U	0.721 U	0.721 U	0.721 U	0.721 U	0.721 U	0.721 U
	Trichloroethene	0.61	**62.3**	**133**	**50.0**	**15.9**	**23.8**	**36.6**	**20.1**	**39.6**	**41.0**	**18.3**	**15.7**	**15.6**	**14.2**	**14.2**	**12.2**	**16.1**	**10.5**	**6.50**	**8.17**	**6.93**
	cis-1,3-Dichloropropene	NS	0.908 U	0.908 U	0.908 U	0.908 U	0.908 U	0.908 U	0.908 U	0.908 U	0.908 U	0.908 U	0.908 U	0.908 U	0.091 U	0.091 U	0.908 U	0.908 U	0.908 U	0.908 U	0.908 U	0.908 U
	4-Methyl-2-pentanone	55.7	0.820 U	0.820 U	0.820 U	0.820 U	0.82 U	0.820 U	0.82 U	0.820 U	0.820 U	0.820 U	0.820 U	0.820 U	0.820 U	0.82 U	**1.70**	0.82 U	0.82 U	0.820 U	**2.54**	0.82 U
	trans-1,3-Dichloropropene	NS	0.908 U	0.908 U	0.908 U	0.908 U	0.908 U	0.908 U	0.908 U	0.908 U	0.908 U	0.908 U	0.908 U	0.908 U	0.091 U	0.091 U	0.908 U	0.908 U	0.908 U	0.908 U	0.908 U	0.908 U
	1,1,2-Trichloroethane	0.06	1.09 U	1.09 U	1.09 U	1.09 U	1.09 U	1.09 U	1.09 U	1.09 U	1.09 U	1.09 U	1.09 U	1.09 U	0.109 U	0.109 U	1.09 U	1.09 U	1.09 U	1.09 U	1.09 U	1.09 U
	Toluene	20	**8.67**	**5.46**	**1.42**	**0.810**	**1.18**	**2.78**	**0.844**	**2.21**	**2.30**	**3.44**	**2.34**	**5.43**	**3.58**	**2.13**	**5.05**	**6.33**	**2.91**	**3.19**	**7.12**	**3.76**
	Dibromochloromethane	NS	1.70 U	1.70 U	1.70 U	1.70 U	1.70 U	1.70 U	1.70 U	1.70 U	1.70 U	1.70 U	1.70 U	1.70 U	0.170 U	0.17 U	1.70 U	1.70 U	1.70 U	1.70 U	1.70 U	1.7 U
	1,2-Dibromoethane	NS	1.54 U	1.54 U	1.54 U	1.54 U	1.54 U	1.54 U	1.54 U	1.54 U	1.54 U	1.54 U	1.54 U	1.54 U	0.154 U	0.154 U	1.54 U	1.54 U	1.54 U	1.54 U	1.54 U	1.54 U
	Tetrachloroethene	0.1	1.36 U	1.36 U	1.36 U	1.36 U	1.36 U	1.36 U	1.36 U	1.36 U	1.36 U	1.36 U	1.36 U	1.36 U	**0.563**	**0.319**	**1.76**	1.36 U	1.36 U	1.36 U	1.36 U	1.36 U
	Chlorobenzene	6.26	0.921 U	0.921 U	0.921 U	0.921 U	0.921 U	0.921 U	0.921 U	0.921 U	0.921 U	0.921 U	0.921 U	0.921 U	**0.272**	**0.258**	0.921 U	0.921 U	0.921 U	0.921 U	0.921 U	0.921 U
	Ethylbenzene	300	**1.45**	**1.59**	**0.977**	**1.27**	**1.28**	**0.916**	0.869 U	**1.10**	**1.10**	**0.873**	**0.93**	**1.94**	**1.27**	**1.18**	**3.30**	**2.25**	**0.986**	0.869 U	**2.05**	**0.89**
	p/m-Xylene	11.8	**3.86**	**5.12**	**2.09**	**3.52**	**4.78**	1.74 U	1.74 U	1.74 U	1.74 U	**1.80**	1.74 U	**3.94**	**1.93**	**1.34**	**7.91**	**3.52**	1.74 U	**1.86**	**6.34**	**2.02**
	Bromoform	NS	2.07 U	2.07 U	2.07 U	2.07 U	2.07 U	2.07 U	2.07 U	2.07 U	2.07 U	2.07 U	2.07 U	2.07 U	0.207 U	0.207 U	2.07 U	2.07 U	2.07 U	2.07 U	2.07 U	2.07 U
	Styrene	2	0.852 U	0.852 U	0.852 U	0.852 U	0.852 U	0.852 U	0.852 U	0.852 U	0.852 U	0.852 U	0.852 U	0.852 U	**0.089**	0.085 U	0.852 U	0.852 U	0.852 U	0.852 U	0.852 U	0.852 U
	1,1,2,2-Tetrachloroethane	0.02	1.37 U	1.37 U	1.37 U	1.37 U	1.37 U	1.37 U	1.37 U	1.37 U	1.37 U	1.37 U	1.37 U	1.37 U	0.137 U	0.137 U	1.37 U	1.37 U	1.37 U	1.37 U	1.37 U	1.37 U
	o-Xylene	11.8	**1.37**	**1.92**	**0.869**	**1.21**	**1.54**	0.869 U	0.869 U	0.869 U	0.869 U	0.869 U	0.869 U	**1.48**	**0.760**	**0.486**	**2.70**	**1.22**	0.869 U	0.869 U	**2.20**	0.869 U
	1,3-Dichlorobenzene	NS	1.20 U	1.20 U	1.20 U	1.20 U	1.20 U	1.20 U	1.2 U	1.20 U	1.20 U	1.20 U	1.20 U	**1.41**	**0.800**	**1.19**	1.20 U	1.20 U	1.20 U	1.20 U	1.20 U	1.2 U
	1,4-Dichlorobenzene	0.18	1.20 U	1.20 U	**1.28**	1.20 U	1.20 U	**1.48**	**1.23**	**4.05**	**2.54**	**1.96**	**2.37**	**3.58**	**2.35**	**3.19**	**2.09**	**2.09**	**1.58**	1.20 U	**1.56**	**1.59**
	1,2-Dichlorobenzene	81.74	1.20 U	1.20 U	1.20 U	1.20 U	1.20 U	1.20 U	1.20 U	1.20 U	1.20 U	1.20 U	1.20 U	1.20 U	**0.198**	**0.289**	1.20 U	1.20 U	1.20 U	1.20 U	1.20 U	1.2 U
	1,2,4-Trichlorobenzene	NS	1.48 U	1.48 U	**1.54**	1.48 U	1.48 U	1.48 U	1.48 U	**2.27**	**1.78**	1.48 U	**1.60**	**2.32**	**1.37**	**2.26**	**1.52**	1.48 U	1.48 U	1.48 U	**1.57**	1.48 U
	Naphthalene	14.25	1.05 U	1.05 U	1.05 U	1.05 U	1.05 U	1.05 U	1.05 U	1.05 U	1.05 U	1.05 U	1.05 U	1.05 U	**0.278**	**0.278**	1.05 U	1.05 U	1.05 U	**1.50**	**1.32**	1.05 U
	Hexachlorobutadiene	NS	2.13 U	2.13 U	2.13 U	2.13 U	2.13 U	2.13 U	2.13 U	2.13 U	2.13 U	2.13 U	2.13 U	2.13 U	0.533 U	0.533 U	2.13 U	2.13 U	2.13 U	2.13 U	2.13 U	2.13 U
	Xylenes (total)	11.8	**5.23**	**7.04**	**2.959**	**4.73**	**6.32**	1.74 U	1.74 U	1.74 U	1.74 U	**1.80**	1.74 U	**5.42**	**2.69**	**1.826**	**10.61**	**4.74**	1.74 U	**1.86**	**8.54**	**2.02**
PCBs																						
(ug/m3)	Aroclor 1016	NS	0.0833 U	0.0833 U	0.333 U	0.0833 U	0.0619 U	0.0833 U	0.0833 U	0.0833 U	0.0833 U	0.0278 U	0.0556 U	0.0417 U	0.0556 U	0.0556 U	0.0833 U	0.0556 U	0.0833 U	0.0833 U	0.0556 U	0.0833 U
	Aroclor 1221	NS	0.0833 U	0.0833 U	0.333 U	0.0833 U	0.0619 U	0.0833 U	0.0833 U	0.0833 U	0.0833 U	0.0278 U	0.0556 U	0.0417 U	0.0556 U	**0.195**	**0.229**	0.0556 U	**0.208**	**0.242**	**0.212**	**0.20**
	Aroclor 1232	NS	0.0833 U	0.0833 U	0.333 U	0.0833 U	0.0619 U	0.0833 U	0.0833 U	0.0833 U	0.0833 U	0.0278 U	0.0556 U	0.0417 U	0.0556 U	0.0556 U	0.0833 U	0.0556 U	0.0833 U	0.0833 U	0.0556 U	0.0833 U
	Aroclor 1242	NS	0.0833 U	0.0833 U	0.333 U	0.0833 U	0.0619 U	0.0833 U	0.0833 U	0.0833 U	0.0833 U	0.0278 U	0.0556 U	0.0417 U	0.0556 U	0.0556 U	0.0833 U	0.0556 U	0.0833 U	0.0833 U	0.0556 U	0.0833 U
	Aroclor 1248	NS	**0.159 J**	0.0833 U	**2.89**	**0.759**	**0.808**	**2.44**	0.0833 U	**0.358**	**0.418**	**0.424**	**0.508**	**0.724**	**0.470**	**0.591**	**0.581**	**0.738**	**0.811**	**0.813**	**0.884**	**1.01**
	Aroclor 1254	NS	**0.440 J**	0.0833 U	**9.08**	**2.58**	**2.81**	**3.56**	**1.90**	**0.729**	**0.744**	**0.764**	**0.711**	**0.686**	**0.422**	**0.474**	**0.648**	**0.679**	**0.739**	**0.715**	**0.641**	**0.70**
	Aroclor 1260	NS	0.0833 U	0.0833 U	0.333 U	0.0833 U	0.0619 U	0.0833 U	0.0833 U	0.0833 U	0.0833 U	0.0278 U	0.0556 U	0.0417 U	0.0556 U	0.0556 U	0.0833 U	0.0556 U	0.0833 U	0.0833 U	0.0556 U	0.0833 U
	Aroclor 1262	NS	NA	NA	NA	NA	NA	NA	NA	NA	NA	NA	NA	NA	NA	NA	NA	NA	NA	NA	NA	NA
	Aroclor 1268	NS	NA	NA	NA	NA	NA	NA	NA	NA	NA	NA	NA	NA	NA	NA	NA	NA	NA	NA	NA	NA
	Total PCBs	0.0005	**0.599 J**	0.0833 U	**11.97**	**3.339**	**3.618**	**6.00**	**1.90**	**1.087**	**1.162**	**1.188**	**1.219**	**1.410**	**0.892**	**1.260**	**1.458**	**1.417**	**1.758**	**1.770**	**1.737**	**1.911**

Notes:
ug/m3 - micrograms per cubic meter.
J - Estimated value.
NA - Sample not analyzed for the listed analyte.
NS - No MassDEP limits exist for this analyte.
U - Compound was not detected at specified quantitation limit.
Values in **Bold** indicate the compound was detected.
TO - Toxic organics.
PCBs - Polychlorinated Biphenyls.
a - Used AAL for 1,2-Dichloroethylene.
* - MassDEP Allowable Ambient Limits (AALs), January 2012.
** - The PCB vapor sample container provided by the analytical laboratory in February 2013 was incorrect and the sample collected from the vapor discharge was not properly sealed and may have contained ambient air from within the mechanical room.

Table 5
Summary of Sub-Slab Vapor Mitigation System Emission Results -- 2012 through 2014
New Bedford High School
New Bedford, Massachusetts

Analysis	Analyte	VSP #:	VSP-1						VSP-4	VSP-2		VSP-3										
		Sample ID:	Vapor Inlet						Tank Vent	Mid Carbon	Vapor Mid Carbon	Vapor Discharge										
		Sample Date:	11/15/2013	12/17/2013	1/16/2014	2/14/2014	3/17/2014	4/21/2014	3/27/2012	3/27/2012	11/21/2012	3/27/2012	4/4/2012	4/17/2012	5/14/2012	6/11/2012	7/16/2012	8/21/2012	9/18/2012	10/18/2012	11/21/2012	12/12/2012
		AALs*																				
TO-15																						
(ug/m3)	Vinyl chloride	0.38	**1.64**	**3.71**	**43.2**	0.511 U	**10.1**	**1.74**	**244**	**0.734**	NA	**1.31**	**3.53**	**6.39**	**10.9**	**6.21**	**5.93**	**10.6**	**6.44**	**17.1**	**11.4**	**6.62**
	Bromomethane	2.64	0.777 U	0.777 U	0.777 U	0.777 U	0.777 U	0.777 U	35.6 U	0.777 U	NA	0.078 U	0.078 U	0.078 U	0.078 U	0.078 U	0.078 U	0.078 U	0.078 U	0.078 U	0.078 U	0.078 U
	Acetone	160.54	**7.48**	**10.9**	**5.23**	**12.5**	**3.54**	**8.79**	109 U	**10.3**	NA	**8.58**	**5.65**	**6.94**	**7.27**	**3.30**	2.38 U	2.38 U	**2.92**	**2.45**	2.38 U	**2.59**
	1,1-Dichloroethene	0.02	0.793 U	0.793 U	0.793 U	0.793 U	0.793 U	0.793 U	36.3 U	0.793 U	NA	0.079 U	0.079 U	0.079 U	0.079 U	**0.333**	**0.218**	0.079 U	0.079 U	0.079 U	0.079 U	**0.301**
	Methylene chloride	0.24	4.86 U	4.86 U	4.86 U	4.86 U	4.86 U	4.86 U	223 U	4.86 U	NA	4.86 U	4.86 U	4.86 U	4.86 U	4.86 U	4.86 U	4.86 U	**5.56**	4.86 U	4.86 U	4.86 U
	trans-1,2-Dichloroethene	107.81[a]	**3.46**	**3.11**	**17.6**	0.793 U	**9.87**	**4.92**	**366**	0.793 U	NA	0.793 U	0.793 U	0.793 U	0.079 U	**3.58**	**24.1**	0.079 U	0.079 U	0.079 U	0.079 U	0.079 U
	1,1-Dichloroethane	NS	0.809 U	0.809 U	0.809 U	0.809 U	0.809 U	0.809 U	37.1 U	0.809 U	NA	0.809 U	0.809 U	0.809 U	0.081 U	0.081 U	0.081 U	0.081 U	0.081 U	0.081 U	0.081 U	0.081 U
	Methyl tert butyl ether	NS	0.721 U	0.721 U	0.721 U	0.721 U	0.721 U	0.721 U	33.0 U	0.721 U	NA	0.721 U	0.721 U	0.721 U	0.072 U	0.072 U	0.072 U	0.072 U	0.072 U	0.072 U	0.072 U	0.072 U
	2-Butanone	10	**0.852**	**3.01**	**1.40**	**4.04**	**1.78**	**2.30**	27.0 U	**2.22**	NA	**3.89**	**2.34**	**2.62**	**0.740**	**0.888**	**0.982**	**0.867**	**1.06**	**0.605**	0.590 U	**0.767**
	cis-1,2-Dichloroethene	107.81[a]	**10.0**	**6.46**	**26.0**	0.793 U	**24.7**	**8.13**	**1,260**	0.793 U	NA	0.793 U	0.793 U	0.793 U	**0.309**	**1.05**	**42.8**	0.079 U	0.079 U	0.079 U	0.079 U	0.079 U
	Chloroform	0.04	0.977 U	0.977 U	0.977 U	0.977 U	0.977 U	0.977 U	44.7 U	0.977 U	NA	**0.098**	0.098 U	0.098 U	0.098 U	0.098 U	**1.24**	0.098 U	0.098 U	0.098 U	0.098 U	0.098 U
	1,2-Dichloroethane	0.04	0.809 U	0.809 U	0.809 U	0.809 U	0.809 U	0.809 U	37.1 U	0.809 U	NA	0.081 U	0.081 U	0.081 U	0.081 U	**0.113**	0.081 U	0.081 U	0.081 U	0.081 U	0.081 U	0.081 U
	1,1,1-Trichloroethane	1038.37	1.09 U	1.09 U	1.09 U	1.09 U	1.09 U	1.09 U	50.0 U	1.09 U	NA	1.09 U	1.09 U	1.09 U	**0.164**	**0.164**	**0.174**	0.109 U	0.109 U	0.109 U	0.109 U	0.109 U
	Benzene	0.12	0.639 U	**1.08**	0.639 U	**1.40**	0.639 U	0.639 U	29.3 U	**5.14**	NA	**0.370**	**0.601**	0.319 U	0.319 U	**0.946**	0.319 U	0.319 U	0.319 U	0.319 U	0.319 U	0.319 U
	Carbon tetrachloride	0.07	1.26 U	1.26 U	1.26 U	1.26 U	1.26 U	1.26 U	57.6 U	1.26 U	NA	0.126 U	0.126 U	0.126 U	0.126 U	0.126 U	0.126 U	0.126 U	0.126 U	0.126 U	0.126 U	0.126 U
	1,2-Dichloropropane	0.05	0.924 U	0.924 U	0.924 U	0.924 U	0.924 U	0.924 U	42.3 U	0.924 U	NA	0.092 U	0.092 U	0.092 U	0.092 U	0.092 U	0.092 U	0.092 U	0.092 U	0.092 U	0.092 U	0.092 U
	Bromodichloromethane	NS	1.34 U	1.34 U	1.34 U	1.34 U	1.34 U	1.34 U	61.4 U	1.34 U	NA	1.34 U	1.34 U	1.34 U	0.134 U	0.134 U	0.134 U	0.134 U	0.134 U	0.134 U	0.134 U	0.134 U
	1,4-Dioxane	0.24	0.721 U	0.721 U	0.721 U	0.721 U	0.721 U	0.721 U	33.0 U	0.721 U	NA	0.360 U	0.360 U	0.360 U	0.360 U	0.360 U	0.360 U	0.360 U	0.360 U	0.360 U	0.360 U	0.360 U
	Trichloroethene	0.61	**4.22**	**2.90**	**2.92**	1.07 U	**4.84**	**3.49**	**15,200**	1.07 U	NA	**0.199**	0.107 U	0.107 U	**0.263**	**0.263**	0.107 U	0.107 U	0.107 U	0.107 U	0.107 U	0.107 U
	cis-1,3-Dichloropropene	NS	0.908 U	0.908 U	0.908 U	0.908 U	0.908 U	0.908 U	41.6 U	0.908 U	NA	0.908 U	0.908 U	0.908 U	0.091 U	0.091 U	0.091 U	0.091 U	0.091 U	0.091 U	0.091 U	0.091 U
	4-Methyl-2-pentanone	55.7	0.820 U	0.820 U	0.820 U	0.820 U	0.820 U	0.820 U	37.5 U	0.82 U	NA	0.820 U	0.820 U	0.820 U	0.820 U	0.820 U	0.820 U	0.820 U	0.820 U	0.820 U	0.820 U	0.820 U
	trans-1,3-Dichloropropene	NS	0.908 U	0.908 U	0.908 U	0.908 U	0.908 U	0.908 U	41.6 U	0.908 U	NA	0.908 U	0.908 U	0.908 U	0.091 U	0.091 U	0.091 U	0.091 U	0.091 U	0.091 U	0.091 U	0.091 U
	1,1,2-Trichloroethane	0.06	1.09 U	1.09 U	1.09 U	1.09 U	1.09 U	1.09 U	50.0 U	1.09 U	NA	0.109 U	0.109 U	0.109 U	0.109 U	0.109 U	0.109 U	0.109 U	0.109 U	0.109 U	0.109 U	0.109 U
	Toluene	20	**2.48**	**18.2**	**3.61**	**22.2**	**2.59**	**12.7**	34.5 U	**1.91**	NA	**2.62**	**11.0**	**1.23**	**0.531**	**0.482**	**0.746**	**0.573**	**0.290**	**0.626**	**0.735**	**1.79**
	Dibromochloromethane	NS	1.70 U	1.70 U	1.70 U	1.70 U	1.70 U	1.70 U	78.0 U	1.70 U	NA	1.70 U	1.70 U	1.70 U	0.170 U	0.170 U	0.170 U	0.170 U	0.170 U	0.170 U	0.170 U	0.170 U
	1,2-Dibromoethane	NS	1.54 U	1.54 U	1.54 U	1.54 U	1.54 U	1.54 U	70.4 U	1.54 U	NA	1.54 U	0.137 U	1.54 U	0.154 U	0.154 U	0.154 U	0.154 U	0.154 U	0.154 U	0.154 U	0.154 U
	Tetrachloroethene	0.1	1.36 U	1.36 U	1.36 U	1.36 U	1.36 U	1.36 U	62.1 U	1.36 U	NA	0.136 U	0.136 U	0.136 U	**0.407**	0.136 U	0.136 U	0.136 U	0.136 U	0.136 U	0.136 U	0.136 U
	Chlorobenzene	6.26	0.921 U	0.921 U	0.921 U	0.921 U	0.921 U	0.921 U	42.2 U	0.921 U	NA	0.921 U	0.921 U	0.921 U	**0.308**	**0.180**	0.092 U	0.092 U	0.092 U	0.092 U	0.092 U	0.092 U
	Ethylbenzene	300	0.869 U	**2.20**	0.869 U	**7.04**	0.869 U	0.869 U	39.8 U	0.869 U	NA	0.869 U	**8.51**	0.869 U	**0.573**	**0.964**	**0.834**	**0.178**	**0.426**	**0.135**	**0.178**	**0.391**
	p/m-Xylene	11.8	**2.54**	**6.43**	1.74 U	**23.5**	1.74 U	**3.05**	79.5 U	1.74 U	NA	**2.13**	**35.6**	1.74 U	**1.24**	**3.71**	**3.40**	**0.608**	**1.55**	**0.369**	**0.565**	**1.23**
	Bromoform	NS	2.07 U	2.07 U	2.07 U	2.07 U	2.07 U	2.07 U	94.7 U	2.07 U	NA	2.07 U	2.07 U	2.07 U	0.207 U	0.207 U	0.207 U	0.207 U	0.207 U	0.207 U	0.207 U	0.207 U
	Styrene	2	0.852 U	0.852 U	0.852 U	0.852 U	0.852 U	0.852 U	39.0 U	0.852 U	NA	0.852 U	0.852 U	0.852 U	**0.438**	**0.251**	0.085 U	0.085 U	0.085 U	0.085 U	0.085 U	0.085 U
	1,1,2,2-Tetrachloroethane	0.02	1.37 U	1.37 U	1.37 U	1.37 U	1.37 U	1.37 U	62.9 U	1.37 U	NA	0.137 U	0.137 U	0.137 U	0.137 U	0.137 U	0.137 U	0.137 U	0.137 U	0.137 U	0.137 U	0.137 U
	o-Xylene	11.8	**1.13**	**2.42**	0.869 U	**9.34**	0.869 U	**1.06**	39.8 U	0.869 U	NA	0.869 U	**12.8**	0.869 U	**0.447**	**1.21**	**1.07**	**0.213**	**0.439**	**0.139**	**0.200**	**0.491**
	1,3-Dichlorobenzene	NS	1.20 U	1.20 U	1.20 U	**49.0**	1.20 U	1.20 U	55.1 U	1.20 U	NA	1.20 U	1.20 U	1.20 U	0.120 U	0.120 U	0.120 U	0.120 U	0.120 U	0.120 U	0.120 U	0.120 U
	1,4-Dichlorobenzene	0.18	1.20 U	1.20 U	**1.49**	1.20 U	1.20 U	1.20 U	55.1 U	1.20 U	NA	0.120 U	0.120 U	0.120 U	**0.138**	0.120 U	0.120 U	0.120 U	0.120 U	0.120 U	0.120 U	0.120 U
	1,2-Dichlorobenzene	81.74	1.20 U	1.20 U	1.20 U	1.20 U	1.20 U	1.20 U	55.1 U	1.20 U	NA	1.20 U	1.20 U	1.20 U	**2.78**	0.120 U	0.120 U	0.120 U	0.120 U	0.120 U	0.120 U	0.120 U
	1,2,4-Trichlorobenzene	NS	1.48 U	1.48 U	1.48 U	1.48 U	1.48 U	1.48 U	68.0 U	1.48 U	NA	1.48 U	1.48 U	1.48 U	**1.31**	0.371 U	0.371 U	0.371 U	0.371 U	0.371 U	0.371 U	0.371 U
	Naphthalene	14.25	**3.38**	1.05 U	1.05 U	**1.14**	1.05 U	1.05 U	48.0 U	1.05 U	NA	1.05 U	1.05 U	1.05 U	**0.414**	0.262 U	0.262 U	0.262 U	0.262 U	0.262 U	0.262 U	**0.372**
	Hexachlorobutadiene	NS	2.13 U	2.13 U	2.13 U	2.13 U	2.13 U	2.13 U	97.7 U	2.13 U	NA	2.13 U	2.13 U	2.13 U	0.533 U	0.533 U	0.533 U	0.533 U	0.533 U	0.533 U	0.533 U	0.533 U
	Xylenes (total)	11.8	**3.67**	**8.85**	1.74 U	**32.84**	1.74 U	**4.11**	79.5 U	1.74 U	NA	**2.13**	**48.4**	1.74 U	**1.687**	**4.92**	**4.47**	**0.821**	**1.989**	**0.508**	**0.765**	**1.721**
PCBs																						
(ug/m3)	Aroclor 1016	NS	0.0833 U	0.0556 U	0.0250 U	0.0250 U	0.0333 U	0.0250 U	NA	NA	0.0833 U	0.0833 U	0.0833 U	0.0833 U	0.0833 U	0.0417 U	0.0617 U	0.0833 U	0.0833 U	0.0833 U	0.0833 U	0.0139 U
	Aroclor 1221	NS	0.0833 U	**0.0797**	0.0833 U	0.0833 U	**0.179**	0.0833 U	NA	NA	0.0833 U	0.0833 U	0.0833 U	0.0833 U	0.0833 U	0.0417 U	0.0617 U	0.0833 U	0.0833 U	0.0833 U	0.0833 U	0.0139 U
	Aroclor 1232	NS	0.0833 U	0.0556 U	0.0250 U	0.0250 U	0.0333 U	0.0250 U	NA	NA	0.0833 U	0.0833 U	0.0833 U	0.0833 U	0.0833 U	0.0417 U	0.0617 U	0.0833 U	0.0833 U	0.0833 U	0.0833 U	0.0139 U
	Aroclor 1242	NS	0.0833 U	0.0556 U	**0.08833**	0.0167 U	0.0333 U	**0.368**	NA	NA	0.0833 U	0.0833 U	0.0833 U	0.0833 U	0.0833 U	0.0417 U	0.0617 U	0.0833 U	0.0833 U	0.0833 U	0.0833 U	0.0139 U
	Aroclor 1248	NS	**0.280**	**0.289**	0.0167 U	**0.267**	**0.826**	0.0167 U	NA	NA	0.0833 U	0.0833 U	0.0833 U	0.0833 U	0.0833 U	0.0417 U	0.0617 U	0.0833 U	0.0833 U	0.0833 U	0.0833 U	0.0139 U
	Aroclor 1254	NS	**0.206**	**0.195**	**0.05100**	0.0167 U	**0.666**	**0.521**	NA	NA	0.0833 U	0.0833 U	0.0833 U	0.0833 U	0.0833 U	0.0417 U	0.0617 U	0.0833 U	0.0833 U	**0.110**	0.0833 U	0.0139 U
	Aroclor 1260	NS	0.0833 U	0.0556 U	0.0167 U	0.0167 U	0.0333 U	0.0167 U	NA	NA	0.0833 U	0.0833 U	0.0833 U	0.0833 U	0.0833 U	0.0417 U	0.0617 U	0.0833 U	0.0833 U	0.0833 U	0.0833 U	0.0139 U
	Aroclor 1262	NS	NA	NA	0.0167 U	0.0167 U	NA	0.0167 U	NA	NA	NA	NA	NA	NA	NA	NA	NA	NA	NA	NA	NA	NA
	Aroclor 1268	NS	NA	NA	0.0167 U	0.0167 U	NA	0.0167 U	NA	NA	NA	NA	NA	NA	NA	NA	NA	NA	NA	NA	NA	NA
	Total PCBs	0.0005	**0.486**	**0.5637**	**0.13933**	**0.267**	**1.671**	**0.889**	NA	NA	0.0833 U	0.0833 U	0.0833 U	0.0833 U	0.0833 U	0.0417 U	0.0617 U	0.0833 U	0.0833 U	**0.110 J**	0.0833 U	0.0139 U

Notes:
ug/m3 - micrograms per cubic meter.
J - Estimated value.
NA - Sample not analyzed for the listed analyte.
NS - No MassDEP limits exist for this analyte.
U - Compound was not detected at specified quantitation limit.
Values in **Bold** indicate the compound was detected.
TO - Toxic organics.
PCBs - Polychlorinated Biphenyls.
a - Used AAL for 1,2-Dichloroethylene.
* - MassDEP Allowable Ambient Limits (AALs), January 2012.
** - The PCB vapor sample container provided by the analytical laboratory in February 2013 was incorrect and the sample collected from the vapor discharge was not properly sealed and may have contained ambient air from within the mechanical room.

Table 5
Summary of Sub-Slab Vapor Mitigation System Emission Results -- 2012 through 2014
New Bedford High School
New Bedford, Massachusetts

Analysis	Analyte	VSP #:	VSP-3															
		Sample ID:	Vapor Discharge															
		Sample Date:	1/15/2013	2/15/2013	3/13/2013	4/16/2013	5/16/2013	6/18/2013	7/30/2013	8/1/2013	9/16/2013	10/15/2013	11/15/2013	12/17/2013	1/16/2014	2/14/2014	3/17/2014	4/21/2014
		AALs*																
TO-15																		
(ug/m3)	Vinyl chloride	0.38	**7.90**	**10.1**	**1.77**	**8.08**	**9.74**	**11.6**	**7.59**	**10.0**	**9.25**	**8.31**	**6.13**	**7.52**	**0.307**	**0.228**	**9.87**	**7.26**
	Bromomethane	2.64	0.078 U	0.078 U	0.078 U	0.078 U	0.078 U	0.078 U	0.078 U	0.078 U	0.078 U	0.078 U	0.078 U	0.078 U	0.078 U	0.078 U	0.078 U	0.078 U
	Acetone	160.54	**5.13**	2.38 U	**11.9**	**10.6**	**30.9**	**4.85**	**5.70**	**3.09**	**30.6**	**6.65**	**4.61**	**7.36**	2.38 U	**7.60**	**4.25**	**4.54**
	1,1-Dichloroethene	0.02	**0.587**	**0.464**	**0.317**	**0.254**	**0.266**	**0.218**	**0.266**	**0.218**	**0.174**	**0.143**	**0.115**	**0.103**	0.079 U	0.079 U	0.079 U	0.079 U
	Methylene chloride	0.24	4.86 U	4.86 U	4.86 U	4.86 U	4.86 U	4.86 U	4.86 U	4.86 U	4.86 U	4.86 U	4.86 U	4.86 U	4.86 U	4.86 U	4.86 U	4.86 U
	trans-1,2-Dichloroethene	107.81[a]	**1.18**	**15.8**	**46.8**	**49.6**	**58.7**	**57.1**	**44.8**	**40.8**	**36.0**	**34.0**	**24.1**	**20.4**	**11.0**	**10.9**	**18.6**	**13.0**
	1,1-Dichloroethane	NS	0.081 U	0.081 U	0.081 U	0.081 U	0.081 U	0.081 U	0.081 U	0.081 U	0.081 U	0.081 U	0.081 U	0.081 U	0.081 U	0.081 U	0.081 U	0.081 U
	Methyl tert butyl ether	NS	0.072 U	0.072 U	0.072 U	0.072 U	0.072 U	0.072 U	0.072 U	0.072 U	0.072 U	0.072 U	0.072 U	0.072 U	0.072 U	0.072 U	0.072 U	0.072 U
	2-Butanone	10	**1.40**	**1.11**	0.590 U	0.59 U	**0.608**	**0.876**	1.48 U	**0.649**	**2.48**	**2.00**	0.590 U	0.590 U	0.590 U	**2.02**	**0.776**	**0.711**
	cis-1,2-Dichloroethene	107.81[a]	**0.127**	**3.39**	**23.7**	**48.4**	**103**	**127**	**116**	**102**	**87.6**	**86.4**	**69.0**	**61.1**	**32.2**	**31.2**	**48.8**	**35.7**
	Chloroform	0.04	0.098 U	0.098 U	0.098 U	0.098 U	0.098 U	**0.259**	**0.659**	**0.894**	**0.772**	**0.83**	**0.669**	**0.630**	**0.440**	**0.498**	**1.13**	**0.845**
	1,2-Dichloroethane	0.04	0.081 U	0.081 U	0.081 U	0.081 U	0.081 U	0.081 U	0.081 U	0.081 U	0.081 U	0.081 U	0.081 U	0.081 U	0.081 U	0.081 U	0.081 U	0.081 U
	1,1,1-Trichloroethane	1038.37	0.109 U	0.109 U	0.109 U	0.109 U	0.109 U	0.109 U	0.109 U	0.109 U	0.109 U	0.109 U	0.109 U	0.109 U	0.109 U	0.109 U	0.109 U	0.109 U
	Benzene	0.12	0.319 U	0.319 U	**0.431**	0.319 U	**0.326**	**0.671**	**0.639**	**0.387**	**0.952**	**0.933**	**0.588**	**0.374**	0.319 U	**0.808**	**1.33**	**1.65**
	Carbon tetrachloride	0.07	0.126 U	0.126 U	0.126 U	0.126 U	0.126 U	0.126 U	0.126 U	0.126 U	0.126 U	0.126 U	0.126 U	0.126 U	0.126 U	0.126 U	0.126 U	0.126 U
	1,2-Dichloropropane	0.05	0.092 U	0.092 U	0.092 U	0.092 U	0.092 U	0.092 U	0.092 U	0.092 U	0.092 U	0.092 U	0.092 U	0.092 U	0.092 U	0.092 U	0.092 U	0.092 U
	Bromodichloromethane	NS	0.134 U	0.134 U	0.134 U	0.134 U	0.134 U	0.134 U	0.134 U	0.134 U	0.134 U	0.134 U	0.134 U	0.134 U	0.134 U	0.134 U	0.134 U	0.134 U
	1,4-Dioxane	0.24	0.360 U	0.360 U	0.360 U	0.36 U	0.360 U	0.360 U	0.360 U	0.360 U	0.360 U	0.36 U	0.360 U	0.360 U	0.360 U	0.360 U	0.360 U	0.360 U
	Trichloroethene	0.61	0.107 U	**0.183**	0.107 U	0.107 U	**0.161**	0.107 U	0.107 U	**0.408**	0.107 U	0.107 U	0.107 U	0.107 U	0.107 U	0.107 U	0.107 U	0.107 U
	cis-1,3-Dichloropropene	NS	0.091 U	0.091 U	0.091 U	0.091 U	0.091 U	0.091 U	0.091 U	0.091 U	0.091 U	0.091 U	0.091 U	0.091 U	0.091 U	0.091 U	0.091 U	0.091 U
	4-Methyl-2-pentanone	55.7	0.820 U	0.820 U	0.820 U	0.82 U	**2.04**	0.82 U	0.820 U	0.820 U	**4.22**	0.82 U	**1.03**	0.820 U	0.820 U	0.820 U	0.820 U	0.820 U
	trans-1,3-Dichloropropene	NS	0.091 U	0.091 U	0.091 U	0.091 U	0.091 U	0.091 U	0.091 U	0.091 U	0.091 U	0.091 U	0.091 U	0.091 U	0.091 U	0.091 U	0.091 U	0.091 U
	1,1,2-Trichloroethane	0.06	0.109 U	0.109 U	0.109 U	0.109 U	0.109 U	0.109 U	0.109 U	0.109 U	0.109 U	0.109 U	0.109 U	0.109 U	0.109 U	0.109 U	0.109 U	0.109 U
	Toluene	20	**2.82**	**0.433**	**1.96**	**0.648**	**1.81**	**1.48**	**1.57**	**1.40**	**4.67**	**3.19**	**2.03**	**2.34**	**0.513**	**16.8**	**0.516**	**2.09**
	Dibromochloromethane	NS	0.170 U	0.170 U	0.170 U	0.17 U	0.170 U	0.170 U	0.170 U	0.170 U	0.170 U	0.17 U	0.170 U	0.170 U	0.170 U	0.170 U	0.170 U	0.170 U
	1,2-Dibromoethane	NS	0.154 U	0.154 U	0.154 U	0.154 U	0.154 U	0.154 U	0.154 U	0.154 U	0.154 U	0.154 U	0.154 U	0.154 U	0.154 U	0.154 U	0.154 U	0.154 U
	Tetrachloroethene	0.1	0.136 U	0.136 U	**0.163**	0.136 U	0.136 U	0.136 U	0.136 U	0.136 U	0.136 U	0.136 U	0.136 U	0.136 U	0.136 U	0.136 U	0.136 U	**0.142**
	Chlorobenzene	6.26	**0.129**	0.092 U	0.092 U	0.092 U	0.092 U	0.092 U	0.092 U	0.092 U	0.092 U	0.092 U	0.092 U	0.092 U	0.092 U	0.092 U	0.092 U	**0.253**
	Ethylbenzene	300	**0.934**	**0.117**	**1.80**	**0.66**	**2.10**	**0.817**	**0.465**	**0.465**	**2.83**	**0.682**	**0.964**	**0.717**	**0.087**	**5.13**	0.087 U	**0.361**
	p/m-Xylene	11.8	**3.10**	**0.326**	**8.34**	**2.67**	**8.34**	**1.89**	**1.38**	**1.48**	**10.3**	**2.16**	**3.35**	**2.58**	**0.304**	**18.9**	**0.252**	**1.32**
	Bromoform	NS	0.207 U	0.207 U	0.207 U	0.207 U	0.207 U	0.207 U	0.207 U	0.207 U	0.207 U	0.207 U	0.207 U	0.207 U	0.207 U	0.207 U	0.207 U	0.207 U
	Styrene	2	0.085 U	0.085 U	**0.302**	0.085 U	**0.158**	**0.119**	**0.358**	**0.243**	**0.272**	0.085 U	**0.651**	0.085 U	0.085 U	**0.264**	0.085 U	0.085 U
	1,1,2,2-Tetrachloroethane	0.02	0.137 U	0.137 U	0.137 U	0.137 U	0.137 U	0.137 U	0.137 U	0.137 U	0.137 U	0.137 U	0.137 U	0.137 U	0.137 U	0.137 U	0.137 U	0.137 U
	o-Xylene	11.8	**1.16**	**0.117**	**2.93**	**0.886**	**2.66**	**0.656**	**0.543**	**0.500**	**3.51**	**0.70**	**1.40**	**0.890**	**0.109**	**7.12**	**0.100**	**0.426**
	1,3-Dichlorobenzene	NS	0.120 U	0.120 U	**0.541**	0.12 U	0.120 U	0.120 U	0.120 U	**0.174**	0.120 U	**0.138**	**0.144**	0.120 U	0.120 U	**42.9**	0.120 U	0.120 U
	1,4-Dichlorobenzene	0.18	**0.409**	**0.307**	0.120 U	0.12 U	0.120 U	0.120 U	0.120 U	0.120 U	0.120 U	0.12 U	0.120 U	0.120 U	0.120 U	0.120 U	0.120 U	**0.259**
	1,2-Dichlorobenzene	81.74	**5.10**	0.120 U	0.120 U	0.12 U	0.120 U	0.120 U	0.120 U	0.120 U	0.120 U	0.12 U	0.120 U	0.120 U	0.120 U	0.120 U	0.120 U	**4.460**
	1,2,4-Trichlorobenzene	NS	0.371 U	**0.453**	0.371 U	0.371 U	0.371 U	0.371 U	0.371 U	0.371 U	0.371 U	0.371 U	0.371 U	0.371 U	0.371 U	0.371 U	0.371 U	0.371 U
	Naphthalene	14.25	**0.325**	0.262 U	**2.16**	**0.398**	**0.897**	0.262 U	**2.31**	**1.95**	**2.32**	**0.357**	**4.69**	0.262 U	0.262 U	**0.682**	0.262 U	0.262 U
	Hexachlorobutadiene	NS	0.533 U	0.533 U	0.533 U	0.533 U	0.533 U	0.533 U	0.533 U	0.533 U	0.533 U	0.533 U	0.533 U	0.533 U	0.533 U	0.533 U	0.533 U	0.533 U
	Xylenes (total)	11.8	**4.26**	**0.443**	**11.27**	**3.556**	**11.0**	**2.546**	**1.923**	**1.98**	**13.81**	**2.85**	**4.75**	**3.47**	**0.413**	**26.02**	**0.352**	**1.746**
PCBs				**														
(ug/m3)	Aroclor 1016	NS	0.0556 U	0.0139 U	0.0556 U	0.0556 U	0.0833 U	0.0556 U	0.0833 U	0.0833 U	0.0556 U	0.0833 U	0.0833 U	0.0556 U	0.0250 U	0.0250 U	0.0333 U	0.0250 U
	Aroclor 1221	NS	0.0556 U	0.0139 U	0.0556 U	0.0556 U	0.0833 U	0.0556 U	0.0833 U	0.0833 U	0.0556 U	0.0833 U	0.0833 U	0.0556 U	0.0833 U	0.0833 U	0.0333 U	0.0833 U
	Aroclor 1232	NS	0.0556 U	0.0139 U	0.0556 U	0.0556 U	0.0833 U	0.0556 U	0.0833 U	0.0833 U	0.0556 U	0.0833 U	0.0833 U	0.0556 U	0.0250 U	0.0250 U	0.0333 U	0.0250 U
	Aroclor 1242	NS	0.0556 U	**0.0245**	0.0556 U	0.0556 U	0.0833 U	0.0556 U	0.0833 U	0.0833 U	0.0556 U	0.0833 U	0.0833 U	0.0556 U	0.0167 U	0.0167 U	0.0333 U	0.0167 U
	Aroclor 1248	NS	0.0556 U	0.0139 U	0.0556 U	0.0556 U	0.0833 U	0.0556 U	0.0833 U	0.0833 U	0.0556 U	0.0833 U	0.0833 U	0.0556 U	0.0167 U	0.0167 U	0.0333 U	0.0167 U
	Aroclor 1254	NS	0.0556 U	**0.0460**	0.0556 U	0.0556 U	0.0833 U	0.0556 U	0.0833 U	0.0833 U	0.0556 U	0.0833 U	0.0833 U	0.0556 U	0.0167 U	0.0167 U	0.0333 U	0.0167 U
	Aroclor 1260	NS	0.0556 U	0.0139 U	0.0556 U	0.0556 U	0.0833 U	0.0556 U	0.0833 U	0.0833 U	0.0556 U	0.0833 U	0.0833 U	0.0556 U	0.0167 U	0.0167 U	0.0333 U	0.0167 U
	Aroclor 1262	NS	NA	NA	NA	NA	NA	NA	NA	NA	NA	NA	NA	NA	0.0167 U	0.0167 U	NA	0.0167 U
	Aroclor 1268	NS	NA	NA	NA	NA	NA	NA	NA	NA	NA	NA	NA	NA	0.0167 U	0.0167 U	NA	0.0167 U
	Total PCBs	0.0005	0.0556 U	**0.0705**	0.0556 U	0.0556 U	0.0833 U	0.0556 U	0.0833 U	0.0833 U	0.0556 U	0.0833 U	0.0833 U	0.0556 U	0.0833 U	0.0833 U	0.0333 U	0.0833 U

Notes:
ug/m3 - micrograms per cubic meter.
J - Estimated value.
NA - Sample not analyzed for the listed analyte.
NS - No MassDEP limits exist for this analyte.
U - Compound was not detected at specified quantitation limit.
Values in **Bold** indicate the compound was detected.
TO - Toxic organics.
PCBs - Polychlorinated Biphenyls.
a - Used AAL for 1,2-Dichloroethylene.
* - MassDEP Allowable Ambient Limits (AALs), January 2012.
** - The PCB vapor sample container provided by the analytical laboratory in February 2013 was incorrect and the sample collected from the vapor discharge was not properly sealed and may have contained ambient air from within the mechanical room.

Table 6
Summary of Analytical Results for Soil Samples - 2010 through 2014
New Bedford High School
New Bedford, Massachusetts

Analysis	Analyte			Sample Location:	MW-27	MW-28	**B-E-1**		**B-E-2**				**B-E-3**				**B-N-1**		**B-N-2**		
				Sample ID:	MW-27	MW-28	B-E-1	B-E-1	B-E-2	B-E-2	B-E-2	B-E-2	B-E-3	B-E-3	B-E-3	B-E-3	B-N-1	B-N-1	B-N-2	B-N-2	B-N-2
				Sample Depth (ft.)*:	6-8	8-10	6-8/8	10-12	6-8	8-10	10-11.5	11.5-12	6-8	8-10	8-10	10-12	6-8/7	8-10	3-4	4-6	6-8
				Sample Date:	8/30/2010	8/30/2010	4/18/2012	4/18/2012	6/26/2012	6/26/2012	6/26/2012	6/26/2012	6/26/2012	6/26/2012	6/26/2012	6/26/2012	4/18/2012	4/18/2012	6/26/2012	6/26/2012	6/26/2012
		S-1/GW-2	S-1/GW-3	UCL											Field Dup						
VOCs																					
(mg/kg)	Acetone	50	400	10,000	0.072 U	0.10 U	0.028 U	NA	NA	NA	NA	NA	NA	NA	NA	NA	3.0 U	NA	NA	NA	NA
	Tertiary-Amyl Methyl Ether	NS	NS	NS	0.00072 U	0.0010 U	0.0031 U	NA	NA	NA	NA	NA	NA	NA	NA	NA	0.34 U	NA	NA	NA	NA
	Benzene	40	40	10,000	0.0014 U	0.0020 U	0.00078 U	NA	NA	NA	NA	NA	NA	NA	NA	NA	0.085 U	NA	NA	NA	NA
	Bromobenzene	NS	NS	NS	0.0014 U	0.0020 U	0.0039 U	NA	NA	NA	NA	NA	NA	NA	NA	NA	0.42 U	NA	NA	NA	NA
	Bromochloromethane	NS	NS	NS	0.0014 U	0.0020 U	0.0031 U	NA	NA	NA	NA	NA	NA	NA	NA	NA	0.34 U	NA	NA	NA	NA
	Bromodichloromethane	0.1	30	5,000	0.0014 U	0.0020 U	0.00078 U	NA	NA	NA	NA	NA	NA	NA	NA	NA	0.085 U	NA	NA	NA	NA
	Bromoform	1	300	10,000	0.0014 U	0.0020 U	0.0031 U	NA	NA	NA	NA	NA	NA	NA	NA	NA	0.34 U	NA	NA	NA	NA
	Bromomethane	0.5	30	6,000	0.0072 U	0.010 U	0.0016 U	NA	NA	NA	NA	NA	NA	NA	NA	NA	0.17 U	NA	NA	NA	NA
	2-Butanone	50	400	10,000	0.029 U	0.041 U	0.0078 U	NA	NA	NA	NA	NA	NA	NA	NA	NA	0.85 U	NA	NA	NA	NA
	n-Butylbenzene	100[1]	100[1]	5,000[1]	0.0014 U	0.0020 U	0.00078 U	NA	NA	NA	NA	NA	NA	NA	NA	NA	0.085 U	NA	NA	NA	NA
	sec-Butylbenzene	100[1]	100[1]	5,000[1]	0.0014 U	0.0020 U	0.00078 U	NA	NA	NA	NA	NA	NA	NA	NA	NA	0.085 U	NA	NA	NA	NA
	tert-Butylbenzene	100[1]	100[1]	5,000[1]	0.0014 U	0.0020 U	0.0031 U	NA	NA	NA	NA	NA	NA	NA	NA	NA	0.34 U	NA	NA	NA	NA
	Ethyl-Tert-Butyl-Ether	NS	NS	NS	0.00072 U	0.0010 U	0.0031 U	NA	NA	NA	NA	NA	NA	NA	NA	NA	0.34 U	NA	NA	NA	NA
	Carbon disulfide	NS	NS	NS	0.0043 U	0.0061 U	0.0031 U	NA	NA	NA	NA	NA	NA	NA	NA	NA	0.34 U	NA	NA	NA	NA
	Carbon tetrachloride	5	30	10,000	0.0014 U	0.0020 U	0.00078 U	NA	NA	NA	NA	NA	NA	NA	NA	NA	0.085 U	NA	NA	NA	NA
	Chlorobenzene	3	100	10,000	0.0014 U	0.0020 U	0.00078 U	NA	NA	NA	NA	NA	NA	NA	NA	NA	0.085 U	NA	NA	NA	NA
	Dibromochloromethane	0.03	20	5,000	0.00072 U	0.0010 U	0.00078 U	NA	NA	NA	NA	NA	NA	NA	NA	NA	0.085 U	NA	NA	NA	NA
	Chloroethane	NS	NS	NS	0.0072 U	0.010 U	0.0016 U	NA	NA	NA	NA	NA	NA	NA	NA	NA	0.17 U	NA	NA	NA	NA
	Chloroform	0.2	500	10,000	0.0029 U	0.0041 U	0.0012 U	NA	NA	NA	NA	NA	NA	NA	NA	NA	0.13 U	NA	NA	NA	NA
	Chloromethane	NS	NS	NS	0.0072 U	0.010 U	0.0031 U	NA	NA	NA	NA	NA	NA	NA	NA	NA	0.34 U	NA	NA	NA	NA
	o-Chlorotoluene	NS	NS	NS	0.0014 U	0.0020 U	0.0031 U	NA	NA	NA	NA	NA	NA	NA	NA	NA	0.34 U	NA	NA	NA	NA
	p-Chlorotoluene	NS	NS	NS	0.0014 U	0.0020 U	0.0031 U	NA	NA	NA	NA	NA	NA	NA	NA	NA	0.34 U	NA	NA	NA	NA
	1,2-Dibromo-3-chloropropane	NS	NS	NS	0.0029 U	0.0041 U	0.0031 U	NA	NA	NA	NA	NA	NA	NA	NA	NA	0.34 U	NA	NA	NA	NA
	1,2-Dibromoethane	0.1	1	400	0.00072 U	0.0010 U	0.0031 U	NA	NA	NA	NA	NA	NA	NA	NA	NA	0.34 U	NA	NA	NA	NA
	Dibromomethane	NS	NS	NS	0.0014 U	0.0020 U	0.0031 U	NA	NA	NA	NA	NA	NA	NA	NA	NA	0.34 U	NA	NA	NA	NA
	1,2-Dichlorobenzene	100	300	10,000	0.0014 U	0.0020 U	0.0031 U	NA	NA	NA	NA	NA	NA	NA	NA	NA	0.34 U	NA	NA	NA	NA
	1,3-Dichlorobenzene	100	100	5,000	0.0014 U	0.0020 U	0.0031 U	NA	NA	NA	NA	NA	NA	NA	NA	NA	0.34 U	NA	NA	NA	NA
	1,4-Dichlorobenzene	1	80	10,000	0.0014 U	**0.0086**	0.0031 U	NA	NA	NA	NA	NA	NA	NA	NA	NA	0.34 U	NA	NA	NA	NA
	Dichlorodifluoromethane	NS	NS	NS	0.0072 U	0.010 U	0.0078 U	NA	NA	NA	NA	NA	NA	NA	NA	NA	0.85 U	NA	NA	NA	NA
	1,1-Dichloroethane	9	500	10,000	0.0014 U	0.0020 U	0.0012 U	NA	NA	NA	NA	NA	NA	NA	NA	NA	0.13 U	NA	NA	NA	NA
	1,2-Dichloroethane	0.1	20	9,000	0.0014 U	0.0020 U	0.00078 U	NA	NA	NA	NA	NA	NA	NA	NA	NA	0.085 U	NA	NA	NA	NA
	1,1-Dichloroethene	40	500	10,000	0.0029 U	0.0041 U	0.00078 U	NA	NA	NA	NA	NA	NA	NA	NA	NA	0.085 U	NA	NA	NA	NA
	cis-1,2-Dichloroethene	0.1	100	5,000	**7.2**	**0.022**	**0.0021**	NA	NA	NA	NA	NA	NA	NA	NA	NA	0.085 U	NA	NA	NA	NA
	trans-1,2-Dichloroethene	1	500	10,000	**0.057**	**0.0025**	0.0012 U	NA	NA	NA	NA	NA	NA	NA	NA	NA	0.13 U	NA	NA	NA	NA
	1,2-Dichloropropane	0.1	30	10,000	0.0014 U	0.0020 U	0.0027 U	NA	NA	NA	NA	NA	NA	NA	NA	NA	0.3 U	NA	NA	NA	NA
	1,3-Dichloropropane	NS	NS	NS	0.00072 U	0.0010 U	0.0031 U	NA	NA	NA	NA	NA	NA	NA	NA	NA	0.34 U	NA	NA	NA	NA
	2,2-Dichloropropane	NS	NS	NS	0.0014 U	0.0020 U	0.0039 U	NA	NA	NA	NA	NA	NA	NA	NA	NA	0.42 U	NA	NA	NA	NA
	1,1-Dichloropropene	NS	NS	NS	0.0014 U	0.0020 U	0.0031 U	NA	NA	NA	NA	NA	NA	NA	NA	NA	0.34 U	NA	NA	NA	NA
	cis-1,3-Dichloropropene	0.4[2]	20[2]	9,000[2]	0.00072 U	0.0010 U	0.00078 U	NA	NA	NA	NA	NA	NA	NA	NA	NA	0.085 U	NA	NA	NA	NA
	trans-1,3-Dichloropropene	0.4[2]	20[2]	9,000[2]	0.00072 U	0.0010 U	0.00078 U	NA	NA	NA	NA	NA	NA	NA	NA	NA	0.085 U	NA	NA	NA	NA
	Ethyl ether	NS	NS	NS	0.0072 U	0.010 U	0.0039 U	NA	NA	NA	NA	NA	NA	NA	NA	NA	0.42 U	NA	NA	NA	NA
	Isopropyl Ether	NS	NS	NS	0.00072 U	0.0010 U	0.0031 U	NA	NA	NA	NA	NA	NA	NA	NA	NA	0.34 U	NA	NA	NA	NA
	1,4-Dioxane	6	20	5,000	0.072 U	0.10 U	0.031 U	NA	NA	NA	NA	NA	NA	NA	NA	NA	8.5 U	NA	NA	NA	NA
	Ethylbenzene	500	500	10,000	**0.0015**	0.0020 U	0.00078 U	NA	NA	NA	NA	NA	NA	NA	NA	NA	0.085 U	NA	NA	NA	NA
	Hexachlorobutadiene	30	30	1,000	0.0014 U	0.0020 U	0.0031 U	NA	NA	NA	NA	NA	NA	NA	NA	NA	0.34 U	NA	NA	NA	NA
	2-Hexanone	NS	NS	NS	0.014 U	0.020 U	0.0078 U	NA	NA	NA	NA	NA	NA	NA	NA	NA	0.85 U	NA	NA	NA	NA
	Isopropylbenzene	100[1]	100[1]	5,000[1]	0.0014 U	0.0020 U	0.00078 U	NA	NA	NA	NA	NA	NA	NA	NA	NA	0.085 U	NA	NA	NA	NA
	p-Isopropyltoluene	100[1]	100[1]	5,000[1]	0.0014 U	0.0020 U	0.00078 U	NA	NA	NA	NA	NA	NA	NA	NA	NA	0.085 U	NA	NA	NA	NA
	Methyl tert butyl ether	100	100	5,000	0.0029 U	0.0041 U	0.0016 U	NA	NA	NA	NA	NA	NA	NA	NA	NA	0.17 U	NA	NA	NA	NA
	Methylene chloride	4	400	7000	0.0072 U	0.010 U	0.0078 U	NA	NA	NA	NA	NA	NA	NA	NA	NA	0.85 U	NA	NA	NA	NA
	4-Methyl-2-pentanone	50	400	10,000	0.014 U	0.020 U	0.0078 U	NA	NA	NA	NA	NA	NA	NA	NA	NA	0.85 U	NA	NA	NA	NA
	Naphthalene	20	500	10,000	0.0029 U	0.0041 U	0.0031 U	NA	NA	NA	NA	NA	NA	NA	NA	NA	0.34 U	NA	NA	NA	NA
	n-Propylbenzene	100[1]	100[1]	5,000[1]	0.0014 U	0.0020 U	0.00078 U	NA	NA	NA	NA	NA	NA	NA	NA	NA	0.085 U	NA	NA	NA	NA
	Styrene	4	70	10,000	0.0014 U	**0.0064**	0.0016 U	NA	NA	NA	NA	NA	NA	NA	NA	NA	0.17 U	NA	NA	NA	NA
	1,1,1,2-Tetrachloroethane	0.1	80	5,000	0.0014 U	0.0020 U	0.00078 U	NA	NA	NA	NA	NA	NA	NA	NA	NA	0.085 U	NA	NA	NA	NA
	1,1,2,2-Tetrachloroethane	0.02	10	4000	0.00072 U	0.0010 U	0.00078 U	NA	NA	NA	NA	NA	NA	NA	NA	NA	0.085 U	NA	NA	NA	NA
	Tetrachloroethene	10	30	10,000	0.0014 U	0.0020 U	0.00078 U	NA	NA	NA	NA	NA	NA	NA	NA	NA	0.085 U	NA	NA	NA	NA
	Tetrahydrofuran	NS	NS	NS	0.0072 U	0.010 U	0.0031 U	NA	NA	NA	NA	NA	NA	NA	NA	NA	0.34 U	NA	NA	NA	NA
	Toluene	500	500	10,000	0.0014 U	0.0020 U	0.0012 U	NA	NA	NA	NA	NA	NA	NA	NA	NA	0.13 U	NA	NA	NA	NA
	1,2,3-Trichlorobenzene	NS	NS	NS	0.0029 U	**0.0075**	0.0031 U	NA	NA	NA	NA	NA	NA	NA	NA	NA	0.34 U	NA	NA	NA	NA
	1,2,4-Trichlorobenzene	6	700	10,000	**0.0017**	**0.034**	0.0031 U	NA	NA	NA	NA	NA	NA	NA	NA	NA	0.34 U	NA	NA	NA	NA
	1,1,1-Trichloroethane	500	500	10,000	0.0014 U	0.0020 U	0.00078 U	NA	NA	NA	NA	NA	NA	NA	NA	NA	0.085 U	NA	NA	NA	NA
	1,1,2-Trichloroethane	2	40	5,000	0.0014 U	0.0020 U	0.0012 U	NA	NA	NA	NA	NA	NA	NA	NA	NA	0.13 U	NA	NA	NA	NA
	Trichloroethene	0.3	30	600	**110**	**2.4**	**0.001**	NA	NA	NA	NA	NA	NA	NA	NA	NA	0.085 U	NA	NA	NA	NA

Table 6
Summary of Analytical Results for Soil Samples - 2010 through 2014
New Bedford High School
New Bedford, Massachusetts

Analysis	Analyte				Sample Location:	MW-27	MW-28	**B-E-1**		**B-E-2**				**B-E-3**				**B-N-1**		**B-N-2**		
					Sample ID:	MW-27	MW-28	B-E-1	B-E-1	B-E-2	B-E-2	B-E-2	B-E-2	B-E-3	B-E-3	B-E-3	B-E-3	B-N-1	B-N-1	B-N-2	B-N-2	B-N-2
					Sample Depth (ft.)*:	6-8	8-10	6-8/8	10-12	6-8	8-10	10-11.5	11.5-12	6-8	8-10	8-10	10-12	6-8/7	8-10	3-4	4-6	6-8
					Sample Date:	8/30/2010	8/30/2010	4/18/2012	4/18/2012	6/26/2012	6/26/2012	6/26/2012	6/26/2012	6/26/2012	6/26/2012	6/26/2012	6/26/2012	4/18/2012	4/18/2012	6/26/2012	6/26/2012	6/26/2012
		S-1/GW-2	S-1/GW-3	UCL												Field Dup						
	Trichlorofluoromethane	NS	NS	NS		0.0072 U	0.010 U	0.0031 U	NA	NA	NA	NA	NA	NA	NA	NA	NA	0.34 U	NA	NA	NA	NA
	1,2,3-Trichloropropane	NS	NS	NS		0.0014 U	0.0020 U	0.0031 U	NA	NA	NA	NA	NA	NA	NA	NA	NA	0.34 U	NA	NA	NA	NA
	1,2,4-Trimethylbenzene	100(1)	100(1)	5,000(1)		0.0014 U	0.0020 U	0.0031 U	NA	NA	NA	NA	NA	NA	NA	NA	NA	0.34 U	NA	NA	NA	NA
	1,3,5-Trimethylbenzene	100(1)	100(1)	5,000(1)		0.0014 U	0.0020 U	0.0031 U	NA	NA	NA	NA	NA	NA	NA	NA	NA	0.34 U	NA	NA	NA	NA
	Vinyl chloride	0.7	1	600		0.0072 U	0.010 U	0.0016 U	NA	NA	NA	NA	NA	NA	NA	NA	NA	0.17 U	NA	NA	NA	NA
	p/m-Xylene	100	500	10,000		0.0029 U	0.0041 U	0.0016 U	NA	NA	NA	NA	NA	NA	NA	NA	NA	**0.18**	NA	NA	NA	NA
	o-Xylene	100	500	10,000		0.0014 U	0.0020 U	0.0016 U	NA	NA	NA	NA	NA	NA	NA	NA	NA	0.17 U	NA	NA	NA	NA
PCBs																						
(mg/kg)	Aroclor 1016	1	1	100		NA	NA	0.192 U	3.66 U	0.0378 U	0.0375 U	1.87 U	6.95 U	0.0359 U	0.0380 U	0.0375 U	0.0376 U	58.4 U	3.51 U	0.186 U	0.765 U	0.718 U
	Aroclor 1221	1	1	100		NA	NA	0.192 U	3.66 U	0.0378 U	0.0375 U	1.87 U	6.95 U	0.0359 U	0.0380 U	0.0375 U	0.0376 U	58.4 U	3.51 U	0.186 U	0.765 U	0.718 U
	Aroclor 1232	1	1	100		NA	NA	0.192 U	3.66 U	0.0378 U	0.0375 U	1.87 U	6.95 U	0.0359 U	0.0380 U	0.0375 U	0.0376 U	58.4 U	3.51 U	0.186 U	0.765 U	0.718 U
	Aroclor 1242	1	1	100		NA	NA	0.192 U	3.66 U	0.0378 U	0.0375 U	1.87 U	6.95 U	0.0359 U	0.0380 U	0.0375 U	0.0376 U	58.4 U	3.51 U	0.186 U	0.765 U	0.718 U
	Aroclor 1248	1	1	100		NA	NA	0.192 U	3.66 U	0.0378 U	0.0375 U	1.87 U	6.95 U	0.0359 U	0.0380 U	0.0375 U	0.0376 U	58.4 U	3.51 U	0.186 U	0.765 U	0.718 U
	Aroclor 1254	1	1	100		NA	NA	**2.98**	**29.5**	0.0378 U	**0.0502**	**17.4**	**123**	0.0359 U	0.0380 U	0.0375 U	0.0376 U	**692**	**58.7**	**1.06**	**5.51**	**7.41**
	Aroclor 1260	1	1	100		NA	NA	0.192 U	3.66 U	0.0378 U	0.0375 U	1.87 U	6.95 U	0.0359 U	0.0380 U	0.0375 U	0.0376 U	58.4 U	3.51 U	0.186 U	0.765 U	0.718 U
	Aroclor 1262	1	1	100		NA	NA	0.192 U	3.66 U	0.0378 U	0.0375 U	1.87 U	6.95 U	0.0359 U	0.0380 U	0.0375 U	0.0376 U	58.4 U	3.51 U	0.186 U	0.765 U	0.718 U
	Aroclor 1268	1	1	100		NA	NA	0.192 U	3.66 U	0.0378 U	0.0375 U	1.87 U	6.95 U	0.0359 U	0.0380 U	0.0375 U	0.0376 U	58.4 U	3.51 U	0.186 U	0.765 U	0.718 U
	Total PCBs	1	1	100		NA	NA	**2.98**	**29.5**	0.0378 U	**0.0502**	**17.4**	**123**	0.0359 U	0.0380 U	0.0375 U	0.0376 U	**692**	**58.7**	**1.06**	**5.51**	**7.41**
Total Petroleum Hydrocarbons																						
(mg/kg)	TPH	1,000	1,000	10,000		NA	NA	38.0 U	NA	NA	NA	NA	NA	NA	NA	NA	NA	**370**	35.2 U	NA	NA	36.5 U
Total Organic Carbon																						
(%)	Total Organic Carbon (Rep1)	N/A	N/A	N/A		NA	**0.101**	**0.066**	NA	NA	NA	NA	NA	NA	NA	NA	NA	**1.17**	NA	NA	NA	NA
	Total Organic Carbon (Rep2)	N/A	N/A	N/A		NA	NA	**0.065**	NA	NA	NA	NA	NA	NA	NA	NA	NA	**1.42**	NA	NA	NA	NA

Notes:
mg/kg - milligrams per kilogram (dry weight) or parts per million (ppm).
E - Value exceeds calibration range.
NA - Sample not analyzed for the listed analyte.
N/A - not applicable.
NS - No MassDEP standards exist for this analyte.
U - Compound was not detected at specified quantitation limit.
Values shown in **bold** indicate the compound was detected.
VOCs - Volatile Organic Compounds.
PCBs - Polychlorinated Biphenyls.
UCL - Upper Concentration Limit.
(1) - MassDEP Method 1 standards for C9-C10 aromatics used.
(2) - MassDEP Method 1 standards for 1,3-Dichloropropene used.
* - Sample depth for Other/VOC analysis; otherwise the sample depth applies to all listed analyses.

Table 6
Summary of Analytical Results for Soil Samples - 2010 through 2014
New Bedford High School
New Bedford, Massachusetts

Analysis	Analyte			Sample Location:	**B-N-3**						**B-N-4**				**B-NE-1**			**B-NE-2**				
				Sample ID:	B-N-3	B-N-3	B-N-3	B-N-3	B-N-3	B-N-3	B-N-4	B-N-4	B-N-4	B-N-4	B-NE-1	B-NE-1	B-NE-1	B-NE-2	B-NE-2	B-NE-2	B-NE-2	B-NE-2
				Sample Depth (ft.)*:	3-4	4-6	6-8	8-10/10	10-11.5	11.5-12	4-6	6-8/7	8-10	10-12	6-8	8-10	10-12/11	3-4	4-6	6-8	8-10/9	10-12
				Sample Date:	8/17/2012	8/17/2012	8/17/2012	8/17/2012	8/22/2012	8/22/2012	8/22/2012	8/22/2012	8/22/2012	8/22/2012	4/18/2012	4/18/2012	4/18/2012	8/17/2012	8/17/2012	8/17/2012	8/17/2012	8/17/2012
		S-1/GW-2	S-1/GW-3	UCL																		
VOCs																						
(mg/kg)	Acetone	50	400	10,000	NA	NA	NA	0.021 U	NA	NA	NA	**0.046**	NA	NA	NA	NA	0.028 U	NA	NA	NA	0.023 U	NA
	Tertiary-Amyl Methyl Ether	NS	NS	NS	NA	NA	NA	0.0024 U	NA	NA	NA	0.0041 U	NA	NA	NA	NA	0.0032 U	NA	NA	NA	0.0026 U	NA
	Benzene	40	40	10,000	NA	NA	NA	0.0006 U	NA	NA	NA	0.0010 U	NA	NA	NA	NA	0.00079 U	NA	NA	NA	0.00064 U	NA
	Bromobenzene	NS	NS	NS	NA	NA	NA	0.0030 U	NA	NA	NA	0.0051 U	NA	NA	NA	NA	0.0039 U	NA	NA	NA	0.0032 U	NA
	Bromochloromethane	NS	NS	NS	NA	NA	NA	0.0024 U	NA	NA	NA	0.0041 U	NA	NA	NA	NA	0.0032 U	NA	NA	NA	0.0026 U	NA
	Bromodichloromethane	0.1	30	5,000	NA	NA	NA	0.0006 U	NA	NA	NA	0.0010 U	NA	NA	NA	NA	0.00079 U	NA	NA	NA	0.00064 U	NA
	Bromoform	1	300	10,000	NA	NA	NA	0.0024 U	NA	NA	NA	0.0041 U	NA	NA	NA	NA	0.0032 U	NA	NA	NA	0.0026 U	NA
	Bromomethane	0.5	30	6,000	NA	NA	NA	0.0012 U	NA	NA	NA	0.0020 U	NA	NA	NA	NA	0.0016 U	NA	NA	NA	0.0013 U	NA
	2-Butanone	50	400	10,000	NA	NA	NA	0.0060 U	NA	NA	NA	**0.010**	NA	NA	NA	NA	0.0079 U	NA	NA	NA	0.0064 U	NA
	n-Butylbenzene	100[1]	100[1]	5,000[1]	NA	NA	NA	0.00060 U	NA	NA	NA	0.0010 U	NA	NA	NA	NA	0.00079 U	NA	NA	NA	0.00064 U	NA
	sec-Butylbenzene	100[1]	100[1]	5,000[1]	NA	NA	NA	0.00060 U	NA	NA	NA	0.0010 U	NA	NA	NA	NA	0.00079 U	NA	NA	NA	0.00064 U	NA
	tert-Butylbenzene	100[1]	100[1]	5,000[1]	NA	NA	NA	0.0024 U	NA	NA	NA	0.0041 U	NA	NA	NA	NA	0.0032 U	NA	NA	NA	0.0026 U	NA
	Ethyl-Tert-Butyl-Ether	NS	NS	NS	NA	NA	NA	0.0024 U	NA	NA	NA	0.0041 U	NA	NA	NA	NA	0.0032 U	NA	NA	NA	0.0026 U	NA
	Carbon disulfide	NS	NS	NS	NA	NA	NA	0.0024 U	NA	NA	NA	0.0041 U	NA	NA	NA	NA	0.0032 U	NA	NA	NA	0.0026 U	NA
	Carbon tetrachloride	5	30	10,000	NA	NA	NA	0.0006 U	NA	NA	NA	0.0010 U	NA	NA	NA	NA	0.00079 U	NA	NA	NA	0.00064 U	NA
	Chlorobenzene	3	100	10,000	NA	NA	NA	0.0006 U	NA	NA	NA	0.0010 U	NA	NA	NA	NA	0.00079 U	NA	NA	NA	0.00064 U	NA
	Dibromochloromethane	0.03	20	5,000	NA	NA	NA	0.0006 U	NA	NA	NA	0.0010 U	NA	NA	NA	NA	0.00079 U	NA	NA	NA	0.00064 U	NA
	Chloroethane	NS	NS	NS	NA	NA	NA	0.0012 U	NA	NA	NA	0.0020 U	NA	NA	NA	NA	0.0016 U	NA	NA	NA	0.0013 U	NA
	Chloroform	0.2	500	10,000	NA	NA	NA	0.00089 U	NA	NA	NA	0.0015 U	NA	NA	NA	NA	0.0012 U	NA	NA	NA	0.00096 U	NA
	Chloromethane	NS	NS	NS	NA	NA	NA	0.0024 U	NA	NA	NA	0.0041 U	NA	NA	NA	NA	0.0032 U	NA	NA	NA	0.0026 U	NA
	o-Chlorotoluene	NS	NS	NS	NA	NA	NA	0.0024 U	NA	NA	NA	0.0041 U	NA	NA	NA	NA	0.0032 U	NA	NA	NA	0.0026 U	NA
	p-Chlorotoluene	NS	NS	NS	NA	NA	NA	0.0024 U	NA	NA	NA	0.0041 U	NA	NA	NA	NA	0.0032 U	NA	NA	NA	0.0026 U	NA
	1,2-Dibromo-3-chloropropane	NS	NS	NS	NA	NA	NA	0.0024 U	NA	NA	NA	0.0041 U	NA	NA	NA	NA	0.0032 U	NA	NA	NA	0.0026 U	NA
	1,2-Dibromoethane	0.1	1	400	NA	NA	NA	0.0024 U	NA	NA	NA	0.0041 U	NA	NA	NA	NA	0.0032 U	NA	NA	NA	0.0026 U	NA
	Dibromomethane	NS	NS	NS	NA	NA	NA	0.0024 U	NA	NA	NA	0.0041 U	NA	NA	NA	NA	0.0032 U	NA	NA	NA	0.0026 U	NA
	1,2-Dichlorobenzene	100	300	10,000	NA	NA	NA	0.0024 U	NA	NA	NA	0.0041 U	NA	NA	NA	NA	0.0032 U	NA	NA	NA	0.0026 U	NA
	1,3-Dichlorobenzene	100	100	5,000	NA	NA	NA	0.0024 U	NA	NA	NA	0.0041 U	NA	NA	NA	NA	0.0032 U	NA	NA	NA	0.0026 U	NA
	1,4-Dichlorobenzene	1	80	10,000	NA	NA	NA	0.0024 U	NA	NA	NA	0.0041 U	NA	NA	NA	NA	0.0032 U	NA	NA	NA	0.0026 U	NA
	Dichlorodifluoromethane	NS	NS	NS	NA	NA	NA	0.006 U	NA	NA	NA	0.010 U	NA	NA	NA	NA	0.0079 U	NA	NA	NA	0.0064 U	NA
	1,1-Dichloroethane	9	500	10,000	NA	NA	NA	0.00089 U	NA	NA	NA	0.0015 U	NA	NA	NA	NA	0.0012 U	NA	NA	NA	0.00096 U	NA
	1,2-Dichloroethane	0.1	20	9,000	NA	NA	NA	0.0006 U	NA	NA	NA	0.0010 U	NA	NA	NA	NA	0.00079 U	NA	NA	NA	0.00064 U	NA
	1,1-Dichloroethene	40	500	10,000	NA	NA	NA	0.0006 U	NA	NA	NA	0.0010 U	NA	NA	NA	NA	0.00079 U	NA	NA	NA	0.00064 U	NA
	cis-1,2-Dichloroethene	0.1	100	5,000	NA	NA	NA	0.0006 U	NA	NA	NA	0.0010 U	NA	NA	NA	NA	0.00079 U	NA	NA	NA	0.00064 U	NA
	trans-1,2-Dichloroethene	1	500	10,000	NA	NA	NA	0.00089 U	NA	NA	NA	0.0015 U	NA	NA	NA	NA	0.0012 U	NA	NA	NA	0.00096 U	NA
	1,2-Dichloropropane	0.1	30	10,000	NA	NA	NA	0.0021 U	NA	NA	NA	0.0036 U	NA	NA	NA	NA	0.0028 U	NA	NA	NA	0.0022 U	NA
	1,3-Dichloropropane	NS	NS	NS	NA	NA	NA	0.0024 U	NA	NA	NA	0.0041 U	NA	NA	NA	NA	0.0032 U	NA	NA	NA	0.0026 U	NA
	2,2-Dichloropropane	NS	NS	NS	NA	NA	NA	0.0030 U	NA	NA	NA	0.0051 U	NA	NA	NA	NA	0.0039 U	NA	NA	NA	0.0032 U	NA
	1,1-Dichloropropene	NS	NS	NS	NA	NA	NA	0.0024 U	NA	NA	NA	0.0041 U	NA	NA	NA	NA	0.0032 U	NA	NA	NA	0.0026 U	NA
	cis-1,3-Dichloropropene	0.4[2]	20[2]	9,000[2]	NA	NA	NA	0.0006 U	NA	NA	NA	0.0010 U	NA	NA	NA	NA	0.00079 U	NA	NA	NA	0.00064 U	NA
	trans-1,3-Dichloropropene	0.4[2]	20[2]	9,000[2]	NA	NA	NA	0.0006 U	NA	NA	NA	0.0010 U	NA	NA	NA	NA	0.00079 U	NA	NA	NA	0.00064 U	NA
	Ethyl ether	NS	NS	NS	NA	NA	NA	0.0030 U	NA	NA	NA	0.0051 U	NA	NA	NA	NA	0.0039 U	NA	NA	NA	0.0032 U	NA
	Isopropyl Ether	NS	NS	NS	NA	NA	NA	0.0024 U	NA	NA	NA	0.0041 U	NA	NA	NA	NA	0.0032 U	NA	NA	NA	0.0026 U	NA
	1,4-Dioxane	6	20	5,000	NA	NA	NA	0.024 U	NA	NA	NA	0.041 U	NA	NA	NA	NA	0.032 U	NA	NA	NA	0.026 U	NA
	Ethylbenzene	500	500	10,000	NA	NA	NA	0.0006 U	NA	NA	NA	0.0010 U	NA	NA	NA	NA	0.00079 U	NA	NA	NA	0.00064 U	NA
	Hexachlorobutadiene	30	30	1,000	NA	NA	NA	0.0024 U	NA	NA	NA	0.0041 U	NA	NA	NA	NA	0.0032 U	NA	NA	NA	0.0026 U	NA
	2-Hexanone	NS	NS	NS	NA	NA	NA	0.0060 U	NA	NA	NA	0.010 U	NA	NA	NA	NA	0.0079 U	NA	NA	NA	0.0064 U	NA
	Isopropylbenzene	100[1]	100[1]	5,000[1]	NA	NA	NA	0.00060 U	NA	NA	NA	0.0010 U	NA	NA	NA	NA	0.00079 U	NA	NA	NA	0.00064 U	NA
	p-Isopropyltoluene	100[1]	100[1]	5,000[1]	NA	NA	NA	0.00060 U	NA	NA	NA	0.0010 U	NA	NA	NA	NA	0.00079 U	NA	NA	NA	0.00064 U	NA
	Methyl tert butyl ether	100	100	5,000	NA	NA	NA	0.0012 U	NA	NA	NA	0.0020 U	NA	NA	NA	NA	0.0016 U	NA	NA	NA	0.0013 U	NA
	Methylene chloride	4	400	7000	NA	NA	NA	0.006 U	NA	NA	NA	0.010 U	NA	NA	NA	NA	0.0079 U	NA	NA	NA	0.0064 U	NA
	4-Methyl-2-pentanone	50	400	10,000	NA	NA	NA	0.0060 U	NA	NA	NA	0.010 U	NA	NA	NA	NA	0.0079 U	NA	NA	NA	0.0064 U	NA
	Naphthalene	20	500	10,000	NA	NA	NA	0.0024 U	NA	NA	NA	0.0041 U	NA	NA	NA	NA	0.0032 U	NA	NA	NA	0.0026 U	NA
	n-Propylbenzene	100[1]	100[1]	5,000[1]	NA	NA	NA	0.00060 U	NA	NA	NA	0.0010 U	NA	NA	NA	NA	0.00079 U	NA	NA	NA	0.00064 U	NA
	Styrene	4	70	10,000	NA	NA	NA	0.0012 U	NA	NA	NA	0.0020 U	NA	NA	NA	NA	0.0016 U	NA	NA	NA	0.0013 U	NA
	1,1,1,2-Tetrachloroethane	0.1	80	5,000	NA	NA	NA	0.0006 U	NA	NA	NA	0.0010 U	NA	NA	NA	NA	0.00079 U	NA	NA	NA	0.00064 U	NA
	1,1,2,2-Tetrachloroethane	0.02	10	4000	NA	NA	NA	0.0006 U	NA	NA	NA	0.0010 U	NA	NA	NA	NA	0.00079 U	NA	NA	NA	0.00064 U	NA
	Tetrachloroethene	10	30	10,000	NA	NA	NA	0.0006 U	NA	NA	NA	0.0010 U	NA	NA	NA	NA	0.00079 U	NA	NA	NA	0.00064 U	NA
	Tetrahydrofuran	NS	NS	NS	NA	NA	NA	0.0024 U	NA	NA	NA	0.0041 U	NA	NA	NA	NA	0.0032 U	NA	NA	NA	0.0026 U	NA
	Toluene	500	500	10,000	NA	NA	NA	0.00089 U	NA	NA	NA	0.0015 U	NA	NA	NA	NA	0.0012 U	NA	NA	NA	0.00096 U	NA
	1,2,3-Trichlorobenzene	NS	NS	NS	NA	NA	NA	0.0024 U	NA	NA	NA	0.0041 U	NA	NA	NA	NA	0.0032 U	NA	NA	NA	0.0026 U	NA
	1,2,4-Trichlorobenzene	6	700	10,000	NA	NA	NA	0.0024 U	NA	NA	NA	0.0041 U	NA	NA	NA	NA	0.0032 U	NA	NA	NA	0.0026 U	NA
	1,1,1-Trichloroethane	500	500	10,000	NA	NA	NA	0.0006 U	NA	NA	NA	0.0010 U	NA	NA	NA	NA	0.00079 U	NA	NA	NA	0.00064 U	NA
	1,1,2-Trichloroethane	2	40	5,000	NA	NA	NA	0.00089 U	NA	NA	NA	0.0015 U	NA	NA	NA	NA	0.0012 U	NA	NA	NA	0.00096 U	NA
	Trichloroethene	0.3	30	600	NA	NA	NA	**0.001**	NA	NA	NA	0.0010 U	NA	NA	NA	NA	0.00079 U	NA	NA	NA	0.00064 U	NA

Table 6
Summary of Analytical Results for Soil Samples - 2010 through 2014
New Bedford High School
New Bedford, Massachusetts

Analysis	Analyte			Sample Location:	**B-N-3**						**B-N-4**				**B-NE-1**			**B-NE-2**				
				Sample ID:	B-N-3	B-N-3	B-N-3	B-N-3	B-N-3	B-N-3	B-N-4	B-N-4	B-N-4	B-N-4	B-NE-1	B-NE-1	B-NE-1	B-NE-2	B-NE-2	B-NE-2	B-NE-2	B-NE-2
				Sample Depth (ft.)*:	3-4	4-6	6-8	8-10/10	10-11.5	11.5-12	4-6	6-8/7	8-10	10-12	6-8	8-10	10-12/11	3-4	4-6	6-8	8-10/9	10-12
				Sample Date:	8/17/2012	8/17/2012	8/17/2012	8/17/2012	8/22/2012	8/22/2012	8/22/2012	8/22/2012	8/22/2012	8/22/2012	4/18/2012	4/18/2012	4/18/2012	8/17/2012	8/17/2012	8/17/2012	8/17/2012	8/17/2012
		S-1/GW-2	S-1/GW-3	UCL																		
	Trichlorofluoromethane	NS	NS	NS	NA	NA	NA	0.0024 U	NA	NA	NA	0.0041 U	NA	NA	NA	NA	0.0032 U	NA	NA	NA	0.0026 U	NA
	1,2,3-Trichloropropane	NS	NS	NS	NA	NA	NA	0.0024 U	NA	NA	NA	0.0041 U	NA	NA	NA	NA	0.0032 U	NA	NA	NA	0.0026 U	NA
	1,2,4-Trimethylbenzene	100(1)	100(1)	5,000(1)	NA	NA	NA	0.0024 U	NA	NA	NA	0.0041 U	NA	NA	NA	NA	0.0032 U	NA	NA	NA	0.0026 U	NA
	1,3,5-Trimethylbenzene	100(1)	100(1)	5,000(1)	NA	NA	NA	0.0024 U	NA	NA	NA	0.0041 U	NA	NA	NA	NA	0.0032 U	NA	NA	NA	0.0026 U	NA
	Vinyl chloride	0.7	1	600	NA	NA	NA	0.0012 U	NA	NA	NA	0.0020 U	NA	NA	NA	NA	0.0016 U	NA	NA	NA	0.0013 U	NA
	p/m-Xylene	100	500	10,000	NA	NA	NA	0.0012 U	NA	NA	NA	0.0020 U	NA	NA	NA	NA	0.0016 U	NA	NA	NA	0.0013 U	NA
	o-Xylene	100	500	10,000	NA	NA	NA	0.0012 U	NA	NA	NA	0.0020 U	NA	NA	NA	NA	0.0016 U	NA	NA	NA	0.0013 U	NA
PCBs																						
(mg/kg)	Aroclor 1016	1	1	100	0.0334 U	0.0344 U	0.0367 U	19.0 U	9.41 U	0.190 U	0.0353 U	0.0376 U	0.0391 U	0.0390 U	0.0383 U	0.0378 U	0.0367 U	0.0347 U	0.0349 U	0.0347 U	0.0381 U	0.0399 U
	Aroclor 1221	1	1	100	0.0334 U	0.0344 U	0.0367 U	19.0 U	9.41 U	0.190 U	0.0353 U	0.0376 U	0.0391 U	0.0390 U	0.0383 U	0.0378 U	0.0367 U	0.0347 U	0.0349 U	0.0347 U	0.0381 U	0.0399 U
	Aroclor 1232	1	1	100	0.0334 U	0.0344 U	0.0367 U	19.0 U	9.41 U	0.190 U	0.0353 U	0.0376 U	0.0391 U	0.0390 U	0.0383 U	0.0378 U	0.0367 U	0.0347 U	0.0349 U	0.0347 U	0.0381 U	0.0399 U
	Aroclor 1242	1	1	100	0.0334 U	0.0344 U	0.0367 U	19.0 U	9.41 U	0.190 U	0.0353 U	0.0376 U	0.0391 U	0.0390 U	0.0383 U	0.0378 U	0.0367 U	0.0347 U	0.0349 U	0.0347 U	0.0381 U	0.0399 U
	Aroclor 1248	1	1	100	0.0334 U	0.0344 U	0.0367 U	19.0 U	9.41 U	0.190 U	0.0353 U	0.0376 U	0.0391 U	0.0390 U	0.0383 U	0.0378 U	0.0367 U	0.0347 U	0.0349 U	0.0347 U	0.0381 U	0.0399 U
	Aroclor 1254	1	1	100	**0.531**	0.0344 U	0.0367 U	**104**	**70.4**	**3.11**	**0.0699**	0.0376 U	0.0391 U	0.0390 U	**0.215**	**0.0402**	**0.0460**	**0.287**	**0.0429**	0.0347 U	0.0381 U	0.0399 U
	Aroclor 1260	1	1	100	0.0334 U	0.0344 U	0.0367 U	19.0 U	9.41 U	0.190 U	0.0353 U	0.0376 U	0.0391 U	0.0390 U	0.0383 U	0.0378 U	0.0367 U	0.0347 U	0.0349 U	0.0347 U	0.0381 U	0.0399 U
	Aroclor 1262	1	1	100	0.0334 U	0.0344 U	0.0367 U	19.0 U	9.41 U	0.190 U	0.0353 U	0.0376 U	0.0391 U	0.0390 U	0.0383 U	0.0378 U	0.0367 U	0.0347 U	0.0349 U	0.0347 U	0.0381 U	0.0399 U
	Aroclor 1268	1	1	100	0.0334 U	0.0344 U	0.0367 U	19.0 U	9.41 U	0.190 U	0.0353 U	0.0376 U	0.0391 U	0.0390 U	0.0383 U	0.0378 U	0.0367 U	0.0347 U	0.0349 U	0.0347 U	0.0381 U	0.0399 U
	Total PCBs	1	1	100	**0.531**	0.0344 U	0.0367 U	**104**	**70.4**	**3.11**	**0.0699**	0.0376 U	0.0391 U	0.0390 U	**0.215**	**0.0402**	**0.0460**	**0.287**	**0.0429**	0.0347 U	0.0381 U	0.0399 U
Total Petroleum Hydrocarbons																						
(mg/kg)	TPH	1,000	1,000	10,000	NA	NA	NA	**332**	NA	NA	NA	**186**	NA	NA	NA	NA	37.6 U	NA	NA	NA	38.3 U	NA
Total Organic Carbon																						
(%)	Total Organic Carbon (Rep1)	N/A	N/A	N/A	NA	NA	NA	NA	NA	NA	NA	NA	NA	NA	NA	NA	NA	NA	NA	NA	NA	NA
	Total Organic Carbon (Rep2)	N/A	N/A	N/A	NA	NA	NA	NA	NA	NA	NA	NA	NA	NA	NA	NA	NA	NA	NA	NA	NA	NA

Notes:
mg/kg - milligrams per kilogram (dry weight) or parts per million (ppm).
E - Value exceeds calibration range.
NA - Sample not analyzed for the listed analyte.
N/A - not applicable.
NS - No MassDEP standards exist for this analyte.
U - Compound was not detected at specified quantitation limit.
Values shown in **bold** indicate the compound was detected.
VOCs - Volatile Organic Compounds.
PCBs - Polychlorinated Biphenyls.
UCL - Upper Concentration Limit.
(1) - MassDEP Method 1 standards for C9-C10 aromatics used.
(2) - MassDEP Method 1 standards for 1,3-Dichloropropene used.
* - Sample depth for Other/VOC analysis; otherwise the sample depth applies to all listed analyses.

Table 6
Summary of Analytical Results for Soil Samples - 2010 through 2014
New Bedford High School
New Bedford, Massachusetts

Analysis	Analyte			Sample Location:	**B-NW-1**				**B-NW-2**	**B-S-2/MW-40**			**B-SE-1**		**B-SSE-1**			**B-SW-1**				**B-SW-2/MW-41**		
				Sample ID:	B-NW-1	B-NW-1	B-NW-1	B-NW-1	B-NW-2	B-S-2/MW-40	B-S-2/MW-40	B-S-2/MW-40	B-SE-1	B-SE-1	B-SSE-1	B-SSE-1	B-SSE-1	B-SW-1	B-SW-1	B-SW-1	B-SW-1	-SW-2/MW-4	-SW-2/MW-4	-SW-2/MW-4
				Sample Depth (ft.)*:	6-6.5	6.5-8	8-10	10-11.5/11	7	6-8	8-10	10-12	6-8	8-10	6-8/6.5	8-10/9	8-10	6-8	8-10	10-11	11-12	6-8/5	8-10	10-12
				Sample Date:	4/18/2012	4/18/2012	4/18/2012	4/18/2012	6/26/2012	6/26/2012	6/26/2012	6/26/2012	4/18/2012	4/18/2012	4/18/2012	4/18/2012	4/18/2012	6/26/2012	6/26/2012	6/26/2012	6/26/2012	6/26/2012	6/26/2012	6/26/2012
		S-1/GW-2	S-1/GW-3	UCL													Field Dup							
VOCs																								
(mg/kg)	Acetone	50	400	10,000	NA	NA	NA	3.5 U	NA	NA	NA	NA	NA	NA	**0.05**	3.5 U	NA	NA	9.8 U	NA	NA	2.0 U	NA	NA
	Tertiary-Amyl Methyl Ether	NS	NS	NS	NA	NA	NA	0.39 U	NA	NA	NA	NA	NA	NA	0.0029 U	0.39 U	NA	NA	1.1 U	NA	NA	0.23 U	NA	NA
	Benzene	40	40	10,000	NA	NA	NA	0.097 U	NA	NA	NA	NA	NA	NA	0.00072 U	0.098 U	NA	NA	0.27 U	NA	NA	0.057 U	NA	NA
	Bromobenzene	NS	NS	NS	NA	NA	NA	0.48 U	NA	NA	NA	NA	NA	NA	0.0036 U	0.49 U	NA	NA	1.4 U	NA	NA	0.28 U	NA	NA
	Bromochloromethane	NS	NS	NS	NA	NA	NA	0.39 U	NA	NA	NA	NA	NA	NA	0.0029 U	0.39 U	NA	NA	1.1 U	NA	NA	0.23 U	NA	NA
	Bromodichloromethane	0.1	30	5,000	NA	NA	NA	0.097 U	NA	NA	NA	NA	NA	NA	0.00072 U	0.098 U	NA	NA	0.27 U	NA	NA	0.057 U	NA	NA
	Bromoform	1	300	10,000	NA	NA	NA	0.39 U	NA	NA	NA	NA	NA	NA	0.0029 U	0.39 U	NA	NA	1.1 U	NA	NA	0.23 U	NA	NA
	Bromomethane	0.5	30	6,000	NA	NA	NA	0.19 U	NA	NA	NA	NA	NA	NA	0.0014 U	0.20 U	NA	NA	0.54 U	NA	NA	0.11 U	NA	NA
	2-Butanone	50	400	10,000	NA	NA	NA	0.97 U	NA	NA	NA	NA	NA	NA	**0.012**	0.98 U	NA	NA	2.7 U	NA	NA	0.57 U	NA	NA
	n-Butylbenzene	100[1]	100[1]	5,000[1]	NA	NA	NA	0.097 U	NA	NA	NA	NA	NA	NA	0.00072 U	0.098 U	NA	NA	0.27 U	NA	NA	0.057 U	NA	NA
	sec-Butylbenzene	100[1]	100[1]	5,000[1]	NA	NA	NA	0.097 U	NA	NA	NA	NA	NA	NA	0.00072 U	0.098 U	NA	NA	0.27 U	NA	NA	0.057 U	NA	NA
	tert-Butylbenzene	100[1]	100[1]	5,000[1]	NA	NA	NA	0.39 U	NA	NA	NA	NA	NA	NA	0.0029 U	0.39 U	NA	NA	1.1 U	NA	NA	0.23 U	NA	NA
	Ethyl-Tert-Butyl-Ether	NS	NS	NS	NA	NA	NA	0.39 U	NA	NA	NA	NA	NA	NA	0.0029 U	0.39 U	NA	NA	1.1 U	NA	NA	0.23 U	NA	NA
	Carbon disulfide	NS	NS	NS	NA	NA	NA	0.39 U	NA	NA	NA	NA	NA	NA	0.0029 U	0.39 U	NA	NA	1.1 U	NA	NA	0.23 U	NA	NA
	Carbon tetrachloride	5	30	10,000	NA	NA	NA	0.097 U	NA	NA	NA	NA	NA	NA	0.00072 U	0.098 U	NA	NA	0.27 U	NA	NA	0.057 U	NA	NA
	Chlorobenzene	3	100	10,000	NA	NA	NA	0.097 U	NA	NA	NA	NA	NA	NA	**0.002**	0.098 U	NA	NA	0.27 U	NA	NA	0.057 U	NA	NA
	Dibromochloromethane	0.03	20	5,000	NA	NA	NA	0.097 U	NA	NA	NA	NA	NA	NA	0.00072 U	0.098 U	NA	NA	0.27 U	NA	NA	0.057 U	NA	NA
	Chloroethane	NS	NS	NS	NA	NA	NA	0.19 U	NA	NA	NA	NA	NA	NA	0.0014 U	0.20 U	NA	NA	0.54 U	NA	NA	0.11 U	NA	NA
	Chloroform	0.2	500	10,000	NA	NA	NA	0.14 U	NA	NA	NA	NA	NA	NA	0.0011 U	0.15 U	NA	NA	0.41 U	NA	NA	0.085 U	NA	NA
	Chloromethane	NS	NS	NS	NA	NA	NA	0.39 U	NA	NA	NA	NA	NA	NA	0.0029 U	0.39 U	NA	NA	1.1 U	NA	NA	0.23 U	NA	NA
	o-Chlorotoluene	NS	NS	NS	NA	NA	NA	0.39 U	NA	NA	NA	NA	NA	NA	0.0029 U	0.39 U	NA	NA	1.1 U	NA	NA	0.23 U	NA	NA
	p-Chlorotoluene	NS	NS	NS	NA	NA	NA	0.39 U	NA	NA	NA	NA	NA	NA	0.0029 U	0.39 U	NA	NA	1.1 U	NA	NA	0.23 U	NA	NA
	1,2-Dibromo-3-chloropropane	NS	NS	NS	NA	NA	NA	0.39 U	NA	NA	NA	NA	NA	NA	0.0029 U	0.39 U	NA	NA	1.1 U	NA	NA	0.23 U	NA	NA
	1,2-Dibromoethane	0.1	1	400	NA	NA	NA	0.39 U	NA	NA	NA	NA	NA	NA	0.0029 U	0.39 U	NA	NA	1.1 U	NA	NA	0.23 U	NA	NA
	Dibromomethane	NS	NS	NS	NA	NA	NA	0.39 U	NA	NA	NA	NA	NA	NA	0.0029 U	0.39 U	NA	NA	1.1 U	NA	NA	0.23 U	NA	NA
	1,2-Dichlorobenzene	100	300	10,000	NA	NA	NA	0.39 U	NA	NA	NA	NA	NA	NA	**0.011**	0.39 U	NA	NA	1.1 U	NA	NA	0.23 U	NA	NA
	1,3-Dichlorobenzene	100	100	5,000	NA	NA	NA	**1.4**	NA	NA	NA	NA	NA	NA	**0.029**	**1.2**	NA	NA	1.1 U	NA	NA	0.23 U	NA	NA
	1,4-Dichlorobenzene	1	80	10,000	NA	NA	NA	**4.4**	NA	NA	NA	NA	NA	NA	**0.06**	**0.71**	NA	NA	**1.5**	NA	NA	0.23 U	NA	NA
	Dichlorodifluoromethane	NS	NS	NS	NA	NA	NA	0.97 U	NA	NA	NA	NA	NA	NA	0.0072 U	0.98 U	NA	NA	2.7 U	NA	NA	0.57 U	NA	NA
	1,1-Dichloroethane	9	500	10,000	NA	NA	NA	0.14 U	NA	NA	NA	NA	NA	NA	0.0011 U	0.15 U	NA	NA	0.41 U	NA	NA	0.085 U	NA	NA
	1,2-Dichloroethane	0.1	20	9,000	NA	NA	NA	0.097 U	NA	NA	NA	NA	NA	NA	0.00072 U	0.098 U	NA	NA	0.27 U	NA	NA	0.057 U	NA	NA
	1,1-Dichloroethene	40	500	10,000	NA	NA	NA	0.097 U	NA	NA	NA	NA	NA	NA	**0.0094**	0.098 U	NA	NA	0.27 U	NA	NA	0.057 U	NA	NA
	cis-1,2-Dichloroethene	0.1	100	5,000	NA	NA	NA	**3.6**	NA	NA	NA	NA	NA	NA	**0.69**	**0.1**	NA	NA	**32**	NA	NA	**0.74**	NA	NA
	trans-1,2-Dichloroethene	1	500	10,000	NA	NA	NA	**1.6**	NA	NA	NA	NA	NA	NA	**0.13**	0.15 U	NA	NA	**6.8**	NA	NA	**0.36**	NA	NA
	1,2-Dichloropropane	0.1	30	10,000	NA	NA	NA	0.34 U	NA	NA	NA	NA	NA	NA	0.0025 U	0.34 U	NA	NA	0.95 U	NA	NA	0.20 U	NA	NA
	1,3-Dichloropropane	NS	NS	NS	NA	NA	NA	0.39 U	NA	NA	NA	NA	NA	NA	0.0029 U	0.39 U	NA	NA	1.1 U	NA	NA	0.23 U	NA	NA
	2,2-Dichloropropane	NS	NS	NS	NA	NA	NA	0.48 U	NA	NA	NA	NA	NA	NA	0.0036 U	0.49 U	NA	NA	1.4 U	NA	NA	0.28 U	NA	NA
	1,1-Dichloropropene	NS	NS	NS	NA	NA	NA	0.39 U	NA	NA	NA	NA	NA	NA	0.0029 U	0.39 U	NA	NA	1.1 U	NA	NA	0.23 U	NA	NA
	cis-1,3-Dichloropropene	0.4[2]	20[2]	9,000[2]	NA	NA	NA	0.097 U	NA	NA	NA	NA	NA	NA	0.00072 U	0.098 U	NA	NA	0.27 U	NA	NA	0.057 U	NA	NA
	trans-1,3-Dichloropropene	0.4[2]	20[2]	9,000[2]	NA	NA	NA	0.097 U	NA	NA	NA	NA	NA	NA	0.00072 U	0.098 U	NA	NA	0.27 U	NA	NA	0.057 U	NA	NA
	Ethyl ether	NS	NS	NS	NA	NA	NA	0.48 U	NA	NA	NA	NA	NA	NA	0.0036 U	0.49 U	NA	NA	1.4 U	NA	NA	0.28 U	NA	NA
	Isopropyl Ether	NS	NS	NS	NA	NA	NA	0.39 U	NA	NA	NA	NA	NA	NA	0.0029 U	0.39 U	NA	NA	1.1 U	NA	NA	0.23 U	NA	NA
	1,4-Dioxane	6	20	5,000	NA	NA	NA	9.7 U	NA	NA	NA	NA	NA	NA	0.029 U	9.8 U	NA	NA	27 U	NA	NA	5.7 U	NA	NA
	Ethylbenzene	500	500	10,000	NA	NA	NA	**1.1**	NA	NA	NA	NA	NA	NA	**0.008**	**0.42**	NA	NA	**0.61**	NA	NA	0.057 U	NA	NA
	Hexachlorobutadiene	30	30	1,000	NA	NA	NA	0.39 U	NA	NA	NA	NA	NA	NA	0.0029 U	0.39 U	NA	NA	1.1 U	NA	NA	0.23 U	NA	NA
	2-Hexanone	NS	NS	NS	NA	NA	NA	0.97 U	NA	NA	NA	NA	NA	NA	0.0072 U	0.98 U	NA	NA	2.7 U	NA	NA	0.57 U	NA	NA
	Isopropylbenzene	100[1]	100[1]	5,000[1]	NA	NA	NA	0.097 U	NA	NA	NA	NA	NA	NA	**0.00076**	0.098 U	NA	NA	0.27 U	NA	NA	0.057 U	NA	NA
	p-Isopropyltoluene	100[1]	100[1]	5,000[1]	NA	NA	NA	0.097 U	NA	NA	NA	NA	NA	NA	0.00072 U	0.098 U	NA	NA	0.27 U	NA	NA	0.057 U	NA	NA
	Methyl tert butyl ether	100	100	5,000	NA	NA	NA	0.19 U	NA	NA	NA	NA	NA	NA	0.0014 U	0.20 U	NA	NA	0.54 U	NA	NA	0.11 U	NA	NA
	Methylene chloride	4	400	7000	NA	NA	NA	0.97 U	NA	NA	NA	NA	NA	NA	0.0072 U	0.98 U	NA	NA	2.7 U	NA	NA	0.57 U	NA	NA
	4-Methyl-2-pentanone	50	400	10,000	NA	NA	NA	0.97 U	NA	NA	NA	NA	NA	NA	0.0072 U	0.98 U	NA	NA	2.7 U	NA	NA	0.57 U	NA	NA
	Naphthalene	20	500	10,000	NA	NA	NA	0.39 U	NA	NA	NA	NA	NA	NA	0.0029 U	0.39 U	NA	NA	1.1 U	NA	NA	0.23 U	NA	NA
	n-Propylbenzene	100[1]	100[1]	5,000[1]	NA	NA	NA	0.097 U	NA	NA	NA	NA	NA	NA	0.00072 U	0.098 U	NA	NA	0.27 U	NA	NA	0.057 U	NA	NA
	Styrene	4	70	10,000	NA	NA	NA	0.19 U	NA	NA	NA	NA	NA	NA	0.0014 U	0.20 U	NA	NA	0.54 U	NA	NA	0.11 U	NA	NA
	1,1,1,2-Tetrachloroethane	0.1	80	5,000	NA	NA	NA	0.097 U	NA	NA	NA	NA	NA	NA	0.00072 U	0.098 U	NA	NA	0.27 U	NA	NA	0.057 U	NA	NA
	1,1,2,2-Tetrachloroethane	0.02	10	4000	NA	NA	NA	0.097 U	NA	NA	NA	NA	NA	NA	0.00072 U	0.098 U	NA	NA	0.27 U	NA	NA	0.057 U	NA	NA
	Tetrachloroethene	10	30	10,000	NA	NA	NA	0.097 U	NA	NA	NA	NA	NA	NA	0.00072 U	0.098 U	NA	NA	0.27 U	NA	NA	0.057 U	NA	NA
	Tetrahydrofuran	NS	NS	NS	NA	NA	NA	0.39 U	NA	NA	NA	NA	NA	NA	0.0029 U	0.39 U	NA	NA	1.1 U	NA	NA	0.23 U	NA	NA
	Toluene	500	500	10,000	NA	NA	NA	0.14 U	NA	NA	NA	NA	NA	NA	0.0011 U	0.15 U	NA	NA	0.41 U	NA	NA	0.085 U	NA	NA
	1,2,3-Trichlorobenzene	NS	NS	NS	NA	NA	NA	0.39 U	NA	NA	NA	NA	NA	NA	**0.04**	0.39 U	NA	NA	1.1 U	NA	NA	0.23 U	NA	NA
	1,2,4-Trichlorobenzene	6	700	10,000	NA	NA	NA	**4.2**	NA	NA	NA	NA	NA	NA	**0.25 E**	**12**	NA	NA	**3.0**	NA	NA	0.23 U	NA	NA
	1,1,1-Trichloroethane	500	500	10,000	NA	NA	NA	0.097 U	NA	NA	NA	NA	NA	NA	0.00072 U	0.098 U	NA	NA	0.27 U	NA	NA	0.057 U	NA	NA
	1,1,2-Trichloroethane	2	40	5,000	NA	NA	NA	0.14 U	NA	NA	NA	NA	NA	NA	0.0011 U	0.15 U	NA	NA	0.41 U	NA	NA	0.085 U	NA	NA
	Trichloroethene	0.3	30	600	NA	NA	NA	0.097 U	NA	NA	NA	NA	NA	NA	**0.28**	0.098 U	NA	NA	0.27 U	NA	NA	**0.076**	NA	NA

Table 6
Summary of Analytical Results for Soil Samples - 2010 through 2014
New Bedford High School
New Bedford, Massachusetts

Analysis	Analyte			Sample Location:	**B-NW-1**				**B-NW-2**	**B-S-2/MW-40**			**B-SE-1**		**B-SSE-1**			**B-SW-1**				**B-SW-2/MW-41**		
				Sample ID:	B-NW-1	B-NW-1	B-NW-1	B-NW-1	B-NW-2	B-S-2/MW-40	B-S-2/MW-40	B-S-2/MW-40	B-SE-1	B-SE-1	B-SSE-1	B-SSE-1	B-SSE-1	B-SW-1	B-SW-1	B-SW-1	B-SW-1	-SW-2/MW-4	-SW-2/MW-4	-SW-2/MW-4
				Sample Depth (ft.)*:	6-6.5	6.5-8	8-10	10-11.5/11	7	6-8	8-10	10-12	6-8	8-10	6-8/6.5	8-10/9	8-10	6-8	8-10	10-11	11-12	6-8/5	8-10	10-12
				Sample Date:	4/18/2012	4/18/2012	4/18/2012	4/18/2012	6/26/2012	6/26/2012	6/26/2012	6/26/2012	4/18/2012	4/18/2012	4/18/2012	4/18/2012	4/18/2012	6/26/2012	6/26/2012	6/26/2012	6/26/2012	6/26/2012	6/26/2012	6/26/2012
		S-1/GW-2	S-1/GW-3	UCL													Field Dup							
	Trichlorofluoromethane	NS	NS	NS	NA	NA	NA	0.39 U	NA	NA	NA	NA	NA	NA	0.0029 U	0.39 U	NA	NA	1.1 U	NA	NA	0.23 U	NA	NA
	1,2,3-Trichloropropane	NS	NS	NS	NA	NA	NA	0.39 U	NA	NA	NA	NA	NA	NA	0.0029 U	0.39 U	NA	NA	1.1 U	NA	NA	0.23 U	NA	NA
	1,2,4-Trimethylbenzene	100(1)	100(1)	5,000(1)	NA	NA	NA	0.39 U	NA	NA	NA	NA	NA	NA	0.0029 U	0.39 U	NA	NA	1.1 U	NA	NA	0.23 U	NA	NA
	1,3,5-Trimethylbenzene	100(1)	100(1)	5,000(1)	NA	NA	NA	0.39 U	NA	NA	NA	NA	NA	NA	0.0029 U	0.39 U	NA	NA	1.1 U	NA	NA	0.23 U	NA	NA
	Vinyl chloride	0.7	1	600	NA	NA	NA	**0.6**	NA	NA	NA	NA	NA	NA	**0.18**	0.20 U	NA	NA	0.54 U	NA	NA	0.11 U	NA	NA
	p/m-Xylene	100	500	10,000	NA	NA	NA	0.19 U	NA	NA	NA	NA	NA	NA	**0.0017**	0.20 U	NA	NA	0.54 U	NA	NA	0.11 U	NA	NA
	o-Xylene	100	500	10,000	NA	NA	NA	0.19 U	NA	NA	NA	NA	NA	NA	0.0014 U	0.20 U	NA	NA	0.54 U	NA	NA	0.11 U	NA	NA
PCBs																								
(mg/kg)	Aroclor 1016	1	1	100	0.0598 U	45.0 U	37.3 U	46.5 U	0.0367 U	0.0377 U	0.0366 U	0.0380 U	0.0383 U	0.0398 U	0.0379 U	0.0365 U	0.0362 U	85.9 U	40.7 U	18.4 U	0.767 U	0.0390 U	0.0395 U	0.0365 U
	Aroclor 1221	1	1	100	0.0598 U	45.0 U	37.3 U	46.5 U	0.0367 U	0.0377 U	0.0366 U	0.0380 U	0.0383 U	0.0398 U	0.0379 U	0.0365 U	0.0362 U	85.9 U	40.7 U	18.4 U	0.767 U	0.0390 U	0.0395 U	0.0365 U
	Aroclor 1232	1	1	100	0.0598 U	45.0 U	37.3 U	46.5 U	0.0367 U	0.0377 U	0.0366 U	0.0380 U	0.0383 U	0.0398 U	0.0379 U	0.0365 U	0.0362 U	85.9 U	40.7 U	18.4 U	0.767 U	0.0390 U	0.0395 U	0.0365 U
	Aroclor 1242	1	1	100	0.0598 U	45.0 U	37.3 U	46.5 U	0.0367 U	0.0377 U	0.0366 U	0.0380 U	0.0383 U	0.0398 U	0.0379 U	0.0365 U	0.0362 U	85.9 U	40.7 U	18.4 U	0.767 U	0.0390 U	0.0395 U	0.0365 U
	Aroclor 1248	1	1	100	0.0598 U	45.0 U	37.3 U	46.5 U	0.0367 U	0.0377 U	0.0366 U	0.0380 U	0.0383 U	0.0398 U	0.0379 U	0.0365 U	0.0362 U	85.9 U	40.7 U	18.4 U	0.767 U	0.0390 U	0.0395 U	0.0365 U
	Aroclor 1254	1	1	100	**0.429**	**563**	**540**	**556**	**0.368**	0.0377 U	0.0366 U	0.0380 U	**0.273**	**0.390**	0.0379 U	0.0365 U	**0.0905**	**1,090**	**503**	**142**	**11.0**	0.0390 U	**0.177**	0.0365 U
	Aroclor 1260	1	1	100	0.0598 U	45.0 U	37.3 U	46.5 U	0.0367 U	0.0377 U	0.0366 U	0.0380 U	0.0383 U	0.0398 U	0.0379 U	0.0365 U	0.0362 U	85.9 U	40.7 U	18.4 U	0.767 U	0.0390 U	0.0395 U	0.0365 U
	Aroclor 1262	1	1	100	0.0598 U	45.0 U	37.3 U	46.5 U	0.0367 U	0.0377 U	0.0366 U	0.0380 U	0.0383 U	0.0398 U	0.0379 U	0.0365 U	0.0362 U	85.9 U	40.7 U	18.4 U	0.767 U	0.0390 U	0.0395 U	0.0365 U
	Aroclor 1268	1	1	100	0.0598 U	45.0 U	37.3 U	46.5 U	0.0367 U	0.0377 U	0.0366 U	0.0380 U	0.0383 U	0.0398 U	0.0379 U	0.0365 U	0.0362 U	85.9 U	40.7 U	18.4 U	0.767 U	0.0390 U	0.0395 U	0.0365 U
	Total PCBs	1	1	100	**0.429**	**563**	**540**	**556**	**0.368**	0.0377 U	0.0366 U	0.0380 U	**0.273**	**0.390**	0.0379 U	0.0365 U	**0.0905**	**1,090**	**503**	**142**	**11.0**	0.0390 U	**0.177**	0.0365 U
Total Petroleum Hydrocarbons																								
(mg/kg)	TPH	1,000	1,000	10,000	NA	**285**	**688**	**510**	**230**	NA	NA	NA	NA	40.6 U	NA	37.3 U	37.9 U	NA	NA	NA	NA	NA	NA	NA
Total Organic Carbon																								
(%)	Total Organic Carbon (Rep1)	N/A	N/A	N/A	NA	**0.102**	NA	NA	NA	NA	NA	NA	NA	NA	NA	**0.038**	NA	NA	NA	NA	NA	NA	NA	NA
	Total Organic Carbon (Rep2)	N/A	N/A	N/A	NA	**0.099**	NA	NA	NA	NA	NA	NA	NA	NA	NA	**0.039**	NA	NA	NA	NA	NA	NA	NA	NA

Notes:
mg/kg - milligrams per kilogram (dry weight) or parts per million (ppm).
E - Value exceeds calibration range.
NA - Sample not analyzed for the listed analyte.
N/A - not applicable.
NS - No MassDEP standards exist for this analyte.
U - Compound was not detected at specified quantitation limit.
Values shown in **bold** indicate the compound was detected.
VOCs - Volatile Organic Compounds.
PCBs - Polychlorinated Biphenyls.
UCL - Upper Concentration Limit.
(1) - MassDEP Method 1 standards for C9-C10 aromatics used.
(2) - MassDEP Method 1 standards for 1,3-Dichloropropene used.
* - Sample depth for Other/VOC analysis; otherwise the sample depth applies to all listed analyses.

Table 6
Summary of Analytical Results for Soil Samples - 2010 through 2014
New Bedford High School
New Bedford, Massachusetts

Analysis	Analyte			Sample Location:	**B-SW-3**					**B-SSW-1**					**B-W-2**			**B-WSW-1**				**MIP-B-S-3**			**MIP-B-W-1**	
				Sample ID:	B-SW-3	B-SW-3	B-SW-3	B-SW-3	B-SW-3	B-SSW-1	B-SSW-1	B-SSW-1	B-SSW-1	B-SSW-1	B-W-2	B-W-2	B-W-2	B-WSW-1	B-WSW-1	B-WSW-1	B-WSW-1	MIP-B-S-3	MIP-B-S-3	MIP-B-S-3	MIP-B-W-1	MIP-B-W-1
				Sample Depth (ft.)*:	4-6	6-8/7.5	6-8	8-10	10-12	6-8/7	6-8/7	8-10	10-11.5	11.5-12	6-8	8-10	10-12	4-6	6-8/7	8-10	10-12	6-8/7	8-10	10-12	6-8/7	10-12
				Sample Date:	8/22/2012	8/22/2012	8/22/2012	8/22/2012	8/22/2012	6/26/2012	6/26/2012	6/26/2012	6/26/2012	6/26/2012	6/26/2012	6/26/2012	6/26/2012	8/22/2012	8/22/2012	8/22/2012	8/22/2012	4/20/2012	4/20/2012	4/20/2012	4/20/2012	4/20/2012
		S-1/GW-2	S-1/GW-3	UCL			Field Dup				Field Dup															
VOCs																										
(mg/kg)	Acetone	50	400	10,000	NA	0.023 U	NA	NA	NA	1.8 U	2.1 U	NA	NA	NA	NA	NA	NA	NA	0.021 U	NA	NA	0.028 U	NA	NA	0.026 U	NA
	Tertiary-Amyl Methyl Ether	NS	NS	NS	NA	0.0025 U	NA	NA	NA	0.20 U	0.23 U	NA	NA	NA	NA	NA	NA	NA	0.0023 U	NA	NA	0.0031 U	NA	NA	0.0028 U	NA
	Benzene	40	40	10,000	NA	0.00063 U	NA	NA	NA	0.051 U	0.058 U	NA	NA	NA	NA	NA	NA	NA	0.00058 U	NA	NA	0.00077 U	NA	NA	0.00071 U	NA
	Bromobenzene	NS	NS	NS	NA	0.0032 U	NA	NA	NA	0.26 U	0.29 U	NA	NA	NA	NA	NA	NA	NA	0.0029 U	NA	NA	0.0038 U	NA	NA	0.0035 U	NA
	Bromochloromethane	NS	NS	NS	NA	0.0025 U	NA	NA	NA	0.20 U	0.23 U	NA	NA	NA	NA	NA	NA	NA	0.0023 U	NA	NA	0.0031 U	NA	NA	0.0028 U	NA
	Bromodichloromethane	0.1	30	5,000	NA	0.00063 U	NA	NA	NA	0.051 U	0.058 U	NA	NA	NA	NA	NA	NA	NA	0.00058 U	NA	NA	0.00077 U	NA	NA	0.00071 U	NA
	Bromoform	1	300	10,000	NA	0.0025 U	NA	NA	NA	0.20 U	0.23 U	NA	NA	NA	NA	NA	NA	NA	0.0023 U	NA	NA	0.0031 U	NA	NA	0.0028 U	NA
	Bromomethane	0.5	30	6,000	NA	0.0013 U	NA	NA	NA	0.10 U	0.12 U	NA	NA	NA	NA	NA	NA	NA	0.0012 U	NA	NA	0.0015 U	NA	NA	0.0014 U	NA
	2-Butanone	50	400	10,000	NA	0.0063 U	NA	NA	NA	0.51 U	0.58 U	NA	NA	NA	NA	NA	NA	NA	0.0058 U	NA	NA	0.0077 U	NA	NA	0.0071 U	NA
	n-Butylbenzene	100[1]	100[1]	5,000[1]	NA	0.00063 U	NA	NA	NA	0.051 U	0.058 U	NA	NA	NA	NA	NA	NA	NA	0.00058 U	NA	NA	0.00077 U	NA	NA	0.00071 U	NA
	sec-Butylbenzene	100[1]	100[1]	5,000[1]	NA	0.00063 U	NA	NA	NA	0.051 U	0.058 U	NA	NA	NA	NA	NA	NA	NA	0.00058 U	NA	NA	0.00077 U	NA	NA	0.00071 U	NA
	tert-Butylbenzene	100[1]	100[1]	5,000[1]	NA	0.0025 U	NA	NA	NA	0.20 U	0.23 U	NA	NA	NA	NA	NA	NA	NA	0.0023 U	NA	NA	0.0031 U	NA	NA	0.0028 U	NA
	Ethyl-Tert-Butyl-Ether	NS	NS	NS	NA	0.0025 U	NA	NA	NA	0.20 U	0.23 U	NA	NA	NA	NA	NA	NA	NA	0.0023 U	NA	NA	0.0031 U	NA	NA	0.0028 U	NA
	Carbon disulfide	NS	NS	NS	NA	0.0025 U	NA	NA	NA	0.20 U	0.23 U	NA	NA	NA	NA	NA	NA	NA	0.0023 U	NA	NA	0.0031 U	NA	NA	0.0028 U	NA
	Carbon tetrachloride	5	30	10,000	NA	0.00063 U	NA	NA	NA	0.051 U	0.058 U	NA	NA	NA	NA	NA	NA	NA	0.00058 U	NA	NA	0.00077 U	NA	NA	0.00071 U	NA
	Chlorobenzene	3	100	10,000	NA	**0.0088**	NA	NA	NA	0.051 U	0.058 U	NA	NA	NA	NA	NA	NA	NA	0.00058 U	NA	NA	0.00077 U	NA	NA	**0.004**	NA
	Dibromochloromethane	0.03	20	5,000	NA	0.00063 U	NA	NA	NA	0.051 U	0.058 U	NA	NA	NA	NA	NA	NA	NA	0.00058 U	NA	NA	0.00077 U	NA	NA	0.00071 U	NA
	Chloroethane	NS	NS	NS	NA	0.0013 U	NA	NA	NA	0.10 U	0.12 U	NA	NA	NA	NA	NA	NA	NA	0.0012 U	NA	NA	0.0015 U	NA	NA	0.0014 U	NA
	Chloroform	0.2	500	10,000	NA	0.00095 U	NA	NA	NA	0.077 U	0.086 U	NA	NA	NA	NA	NA	NA	NA	0.00088 U	NA	NA	0.0012 U	NA	NA	0.0011 U	NA
	Chloromethane	NS	NS	NS	NA	0.0025 U	NA	NA	NA	0.20 U	0.23 U	NA	NA	NA	NA	NA	NA	NA	0.0023 U	NA	NA	0.0031 U	NA	NA	0.0028 U	NA
	o-Chlorotoluene	NS	NS	NS	NA	0.0025 U	NA	NA	NA	0.20 U	0.23 U	NA	NA	NA	NA	NA	NA	NA	0.0023 U	NA	NA	0.0031 U	NA	NA	0.0028 U	NA
	p-Chlorotoluene	NS	NS	NS	NA	0.0025 U	NA	NA	NA	0.20 U	0.23 U	NA	NA	NA	NA	NA	NA	NA	0.0023 U	NA	NA	0.0031 U	NA	NA	0.0028 U	NA
	1,2-Dibromo-3-chloropropane	NS	NS	NS	NA	0.0025 U	NA	NA	NA	0.20 U	0.23 U	NA	NA	NA	NA	NA	NA	NA	0.0023 U	NA	NA	0.0031 U	NA	NA	0.0028 U	NA
	1,2-Dibromoethane	0.1	1	400	NA	0.0025 U	NA	NA	NA	0.20 U	0.23 U	NA	NA	NA	NA	NA	NA	NA	0.0023 U	NA	NA	0.0031 U	NA	NA	0.0028 U	NA
	Dibromomethane	NS	NS	NS	NA	0.0025 U	NA	NA	NA	0.20 U	0.23 U	NA	NA	NA	NA	NA	NA	NA	0.0023 U	NA	NA	0.0031 U	NA	NA	0.0028 U	NA
	1,2-Dichlorobenzene	100	300	10,000	NA	0.0025 U	NA	NA	NA	0.20 U	0.23 U	NA	NA	NA	NA	NA	NA	NA	0.0023 U	NA	NA	0.0031 U	NA	NA	0.0028 U	NA
	1,3-Dichlorobenzene	100	100	5,000	NA	0.0025 U	NA	NA	NA	0.20 U	0.23 U	NA	NA	NA	NA	NA	NA	NA	0.0023 U	NA	NA	0.0031 U	NA	NA	0.0028 U	NA
	1,4-Dichlorobenzene	1	80	10,000	NA	**0.0065**	NA	NA	NA	0.20 U	0.23 U	NA	NA	NA	NA	NA	NA	NA	**0.0024**	NA	NA	0.0031 U	NA	NA	**0.014**	NA
	Dichlorodifluoromethane	NS	NS	NS	NA	0.0063 U	NA	NA	NA	0.51 U	0.58 U	NA	NA	NA	NA	NA	NA	NA	0.0058 U	NA	NA	0.0077 U	NA	NA	0.0071 U	NA
	1,1-Dichloroethane	9	500	10,000	NA	0.00095 U	NA	NA	NA	0.077 U	0.086 U	NA	NA	NA	NA	NA	NA	NA	0.00088 U	NA	NA	0.0012 U	NA	NA	0.0011 U	NA
	1,2-Dichloroethane	0.1	20	9,000	NA	0.00063 U	NA	NA	NA	0.051 U	0.058 U	NA	NA	NA	NA	NA	NA	NA	0.00058 U	NA	NA	0.00077 U	NA	NA	0.00071 U	NA
	1,1-Dichloroethene	40	500	10,000	NA	0.00063 U	NA	NA	NA	0.051 U	0.058 U	NA	NA	NA	NA	NA	NA	NA	0.00058 U	NA	NA	0.00077 U	NA	NA	0.00071 U	NA
	cis-1,2-Dichloroethene	0.1	100	5,000	NA	**0.0022**	NA	NA	NA	**3.7**	**4.2**	NA	NA	NA	NA	NA	NA	NA	**0.019**	NA	NA	**0.027**	NA	NA	0.00071 U	NA
	trans-1,2-Dichloroethene	1	500	10,000	NA	**0.0026**	NA	NA	NA	**1.0**	**1.1**	NA	NA	NA	NA	NA	NA	NA	**0.032**	NA	NA	**0.0019**	NA	NA	0.0011 U	NA
	1,2-Dichloropropane	0.1	30	10,000	NA	0.0022 U	NA	NA	NA	0.18 U	0.20 U	NA	NA	NA	NA	NA	NA	NA	0.0020 U	NA	NA	0.0027 U	NA	NA	0.0025 U	NA
	1,3-Dichloropropane	NS	NS	NS	NA	0.0025 U	NA	NA	NA	0.20 U	0.23 U	NA	NA	NA	NA	NA	NA	NA	0.0023 U	NA	NA	0.0031 U	NA	NA	0.0028 U	NA
	2,2-Dichloropropane	NS	NS	NS	NA	0.0032 U	NA	NA	NA	0.26 U	0.29 U	NA	NA	NA	NA	NA	NA	NA	0.0029 U	NA	NA	0.0038 U	NA	NA	0.0035 U	NA
	1,1-Dichloropropene	NS	NS	NS	NA	0.0025 U	NA	NA	NA	0.20 U	0.23 U	NA	NA	NA	NA	NA	NA	NA	0.0023 U	NA	NA	0.0031 U	NA	NA	0.0028 U	NA
	cis-1,3-Dichloropropene	0.4[2]	20[2]	9,000[2]	NA	0.00063 U	NA	NA	NA	0.051 U	0.058 U	NA	NA	NA	NA	NA	NA	NA	0.00058 U	NA	NA	0.00077 U	NA	NA	0.00071 U	NA
	trans-1,3-Dichloropropene	0.4[2]	20[2]	9,000[2]	NA	0.00063 U	NA	NA	NA	0.051 U	0.058 U	NA	NA	NA	NA	NA	NA	NA	0.00058 U	NA	NA	0.00077 U	NA	NA	0.00071 U	NA
	Ethyl ether	NS	NS	NS	NA	0.0032 U	NA	NA	NA	0.26 U	0.29 U	NA	NA	NA	NA	NA	NA	NA	0.0029 U	NA	NA	0.0038 U	NA	NA	0.0035 U	NA
	Isopropyl Ether	NS	NS	NS	NA	0.0025 U	NA	NA	NA	0.20 U	0.23 U	NA	NA	NA	NA	NA	NA	NA	0.0023 U	NA	NA	0.0031 U	NA	NA	0.0028 U	NA
	1,4-Dioxane	6	20	5,000	NA	0.025 U	NA	NA	NA	5.1 U	5.8 U	NA	NA	NA	NA	NA	NA	NA	0.023 U	NA	NA	0.031 U	NA	NA	0.028 U	NA
	Ethylbenzene	500	500	10,000	NA	**0.00070**	NA	NA	NA	0.051 U	**0.067**	NA	NA	NA	NA	NA	NA	NA	0.00058 U	NA	NA	0.00077 U	NA	NA	**0.0022**	NA
	Hexachlorobutadiene	30	30	1,000	NA	0.0025 U	NA	NA	NA	0.20 U	0.23 U	NA	NA	NA	NA	NA	NA	NA	0.0023 U	NA	NA	0.0031 U	NA	NA	0.0028 U	NA
	2-Hexanone	NS	NS	NS	NA	0.0063 U	NA	NA	NA	0.51 U	0.58 U	NA	NA	NA	NA	NA	NA	NA	0.0058 U	NA	NA	0.0077 U	NA	NA	0.0071 U	NA
	Isopropylbenzene	100[1]	100[1]	5,000[1]	NA	0.00063 U	NA	NA	NA	0.051 U	0.058 U	NA	NA	NA	NA	NA	NA	NA	0.00058 U	NA	NA	0.00077 U	NA	NA	0.00071 U	NA
	p-Isopropyltoluene	100[1]	100[1]	5,000[1]	NA	0.00063 U	NA	NA	NA	0.051 U	0.058 U	NA	NA	NA	NA	NA	NA	NA	0.00058 U	NA	NA	0.00077 U	NA	NA	0.00071 U	NA
	Methyl tert butyl ether	100	100	5,000	NA	0.0013 U	NA	NA	NA	0.10 U	0.12 U	NA	NA	NA	NA	NA	NA	NA	0.0012 U	NA	NA	0.0015 U	NA	NA	0.0014 U	NA
	Methylene chloride	4	400	7000	NA	0.0063 U	NA	NA	NA	0.51 U	0.58 U	NA	NA	NA	NA	NA	NA	NA	0.0058 U	NA	NA	0.0077 U	NA	NA	0.0071 U	NA
	4-Methyl-2-pentanone	50	400	10,000	NA	0.0063 U	NA	NA	NA	0.51 U	0.58 U	NA	NA	NA	NA	NA	NA	NA	0.0058 U	NA	NA	0.0077 U	NA	NA	0.0071 U	NA
	Naphthalene	20	500	10,000	NA	0.0025 U	NA	NA	NA	0.20 U	0.23 U	NA	NA	NA	NA	NA	NA	NA	0.0023 U	NA	NA	0.0031 U	NA	NA	0.0028 U	NA
	n-Propylbenzene	100[1]	100[1]	5,000[1]	NA	0.00063 U	NA	NA	NA	0.051 U	0.058 U	NA	NA	NA	NA	NA	NA	NA	0.00058 U	NA	NA	0.00077 U	NA	NA	0.00071 U	NA
	Styrene	4	70	10,000	NA	0.0013 U	NA	NA	NA	0.10 U	0.12 U	NA	NA	NA	NA	NA	NA	NA	0.0012 U	NA	NA	0.0015 U	NA	NA	0.0014 U	NA
	1,1,1,2-Tetrachloroethane	0.1	80	5,000	NA	0.00063 U	NA	NA	NA	0.051 U	0.058 U	NA	NA	NA	NA	NA	NA	NA	0.00058 U	NA	NA	0.00077 U	NA	NA	0.00071 U	NA
	1,1,2,2-Tetrachloroethane	0.02	10	4000	NA	0.00063 U	NA	NA	NA	0.051 U	0.058 U	NA	NA	NA	NA	NA	NA	NA	0.00058 U	NA	NA	0.00077 U	NA	NA	0.00071 U	NA
	Tetrachloroethene	10	30	10,000	NA	0.00063 U	NA	NA	NA	0.051 U	0.058 U	NA	NA	NA	NA	NA	NA	NA	0.00058 U	NA	NA	0.00077 U	NA	NA	0.00071 U	NA
	Tetrahydrofuran	NS	NS	NS	NA	0.0025 U	NA	NA	NA	0.20 U	0.23 U	NA	NA	NA	NA	NA	NA	NA	0.0023 U	NA	NA	0.0031 U	NA	NA	0.0028 U	NA
	Toluene	500	500	10,000	NA	0.00095 U	NA	NA	NA	0.077 U	0.086 U	NA	NA	NA	NA	NA	NA	NA	0.00088 U	NA	NA	0.0012 U	NA	NA	0.0011 U	NA
	1,2,3-Trichlorobenzene	NS	NS	NS	NA	0.0025 U	NA	NA	NA	0.20 U	0.23 U	NA	NA	NA	NA	NA	NA	NA	0.0023 U	NA	NA	0.0031 U	NA	NA	0.0028 U	NA
	1,2,4-Trichlorobenzene	6	700	10,000	NA	0.0025 U	NA	NA	NA	**0.77**	**2.6**	NA	NA	NA	NA	NA	NA	NA	**0.0023**	NA	NA	0.0031 U	NA	NA	**0.012**	NA
	1,1,1-Trichloroethane	500	500	10,000	NA	0.00063 U	NA	NA	NA	0.051 U	0.058 U	NA	NA	NA	NA	NA	NA	NA	0.00058 U	NA	NA	0.00077 U	NA	NA	0.00071 U	NA
	1,1,2-Trichloroethane	2	40	5,000	NA	0.00095 U	NA	NA	NA	0.077 U	0.086 U	NA	NA	NA	NA	NA	NA	NA	0.00088 U	NA	NA	0.0012 U	NA	NA	0.0011 U	NA
	Trichloroethene	0.3	30	600	NA	0.00063 U	NA	NA	NA	**0.058**	**0.070**	NA	NA	NA	NA	NA	NA	NA	0.00058 U	NA	NA	**0.0098**	NA	NA	0.00071 U	NA

Table 6
Summary of Analytical Results for Soil Samples - 2010 through 2014
New Bedford High School
New Bedford, Massachusetts

Analysis	Analyte			Sample Location:	**B-SW-3**					**B-SSW-1**					**B-W-2**			**B-WSW-1**				**MIP-B-S-3**			**MIP-B-W-1**	
				Sample ID:	B-SW-3	B-SW-3	B-SW-3	B-SW-3	B-SW-3	B-SSW-1	B-SSW-1	B-SSW-1	B-SSW-1	B-SSW-1	B-W-2	B-W-2	B-W-2	B-WSW-1	B-WSW-1	B-WSW-1	B-WSW-1	MIP-B-S-3	MIP-B-S-3	MIP-B-S-3	MIP-B-W-1	MIP-B-W-1
				Sample Depth (ft.)*:	4-6	6-8/7.5	6-8	8-10	10-12	6-8/7	6-8/7	8-10	10-11.5	11.5-12	6-8	8-10	10-12	4-6	6-8/7	8-10	10-12	6-8/7	8-10	10-12	6-8/7	10-12
				Sample Date:	8/22/2012	8/22/2012	8/22/2012	8/22/2012	8/22/2012	6/26/2012	6/26/2012	6/26/2012	6/26/2012	6/26/2012	6/26/2012	6/26/2012	6/26/2012	8/22/2012	8/22/2012	8/22/2012	8/22/2012	4/20/2012	4/20/2012	4/20/2012	4/20/2012	4/20/2012
		S-1/GW-2	S-1/GW-3	UCL			Field Dup				Field Dup															
	Trichlorofluoromethane	NS	NS	NS	NA	0.0025 U	NA	NA	NA	0.20 U	0.23 U	NA	NA	NA	NA	NA	NA	NA	0.0023 U	NA	NA	0.0031 U	NA	NA	0.0028 U	NA
	1,2,3-Trichloropropane	NS	NS	NS	NA	0.0025 U	NA	NA	NA	0.20 U	0.23 U	NA	NA	NA	NA	NA	NA	NA	0.0023 U	NA	NA	0.0031 U	NA	NA	0.0028 U	NA
	1,2,4-Trimethylbenzene	100(1)	100(1)	5,000(1)	NA	0.0025 U	NA	NA	NA	0.20 U	0.23 U	NA	NA	NA	NA	NA	NA	NA	0.0023 U	NA	NA	0.0031 U	NA	NA	0.0028 U	NA
	1,3,5-Trimethylbenzene	100(1)	100(1)	5,000(1)	NA	0.0025 U	NA	NA	NA	0.20 U	0.23 U	NA	NA	NA	NA	NA	NA	NA	0.0023 U	NA	NA	0.0031 U	NA	NA	0.0028 U	NA
	Vinyl chloride	0.7	1	600	NA	**0.015**	NA	NA	NA	**0.22**	0.12 U	NA	NA	NA	NA	NA	NA	NA	**0.21**	NA	NA	**0.0042**	NA	NA	**0.002**	NA
	p/m-Xylene	100	500	10,000	NA	0.0013 U	NA	NA	NA	0.10 U	0.12 U	NA	NA	NA	NA	NA	NA	NA	0.0012 U	NA	NA	0.0015 U	NA	NA	0.0014 U	NA
	o-Xylene	100	500	10,000	NA	0.0013 U	NA	NA	NA	0.10 U	0.12 U	NA	NA	NA	NA	NA	NA	NA	0.0012 U	NA	NA	0.0015 U	NA	NA	0.0014 U	NA
PCBs																										
(mg/kg)	Aroclor 1016	1	1	100	0.0688 U	0.357 U	0.0364 U	0.0398 U	0.0374 U	7.22 U	NA	0.765 U	14.8 U	0.37 U	0.0387 U	0.0407 U	0.0366 U	0.0688 U	0.0351 U	0.0405 U	0.0374 U	0.0353 U	0.0345 U	0.0358 U	35.9 U	7.92 U
	Aroclor 1221	1	1	100	0.0688 U	0.357 U	0.0364 U	0.0398 U	0.0374 U	7.22 U	NA	0.765 U	14.8 U	0.37 U	0.0387 U	0.0407 U	0.0366 U	0.0688 U	0.0351 U	0.0405 U	0.0374 U	0.0353 U	0.0345 U	0.0358 U	35.9 U	7.92 U
	Aroclor 1232	1	1	100	0.0688 U	0.357 U	0.0364 U	0.0398 U	0.0374 U	7.22 U	NA	0.765 U	14.8 U	0.37 U	0.0387 U	0.0407 U	0.0366 U	0.0688 U	0.0351 U	0.0405 U	0.0374 U	0.0353 U	0.0345 U	0.0358 U	35.9 U	7.92 U
	Aroclor 1242	1	1	100	0.0688 U	0.357 U	0.0364 U	0.0398 U	0.0374 U	7.22 U	NA	0.765 U	14.8 U	0.37 U	0.0387 U	0.0407 U	0.0366 U	0.0688 U	0.0351 U	0.0405 U	0.0374 U	0.0353 U	0.0345 U	0.0358 U	35.9 U	7.92 U
	Aroclor 1248	1	1	100	0.0688 U	**2.68**	0.0364 U	0.0398 U	0.0374 U	7.22 U	NA	0.765 U	14.8 U	0.37 U	0.0387 U	0.0407 U	0.0366 U	0.0688 U	0.0351 U	0.0405 U	0.0374 U	0.0353 U	0.0345 U	0.0358 U	35.9 U	7.92 U
	Aroclor 1254	1	1	100	**0.890**	**2.31**	**0.575**	**0.0410**	**0.0511**	**37.0**	NA	**1.88**	**175**	**5.03**	0.0387 U	**0.129**	**0.0368**	**1.13**	0.0351 U	**0.0978**	**0.0578**	**0.0594**	**0.0785**	0.0358 U	**319**	**77.1**
	Aroclor 1260	1	1	100	0.0688 U	0.357 U	0.0364 U	0.0398 U	0.0374 U	7.22 U	NA	0.765 U	14.8 U	0.37 U	0.0387 U	0.0407 U	0.0366 U	0.0688 U	0.0351 U	0.0405 U	0.0374 U	0.0353 U	0.0345 U	0.0358 U	35.9 U	7.92 U
	Aroclor 1262	1	1	100	0.0688 U	0.357 U	0.0364 U	0.0398 U	0.0374 U	7.22 U	NA	0.765 U	14.8 U	0.37 U	0.0387 U	0.0407 U	0.0366 U	0.0688 U	0.0351 U	0.0405 U	0.0374 U	0.0353 U	0.0345 U	0.0358 U	35.9 U	7.92 U
	Aroclor 1268	1	1	100	0.0688 U	0.357 U	0.0364 U	0.0398 U	0.0374 U	7.22 U	NA	0.765 U	14.8 U	0.37 U	0.0387 U	0.0407 U	0.0366 U	0.0688 U	0.0351 U	0.0405 U	0.0374 U	0.0353 U	0.0345 U	0.0358 U	35.9 U	7.92 U
	Total PCBs	1	1	100	**0.890**	**4.99**	**0.575**	**0.0410**	**0.0511**	**37.0**	NA	**1.88**	**175**	**5.03**	0.0387 U	**0.129**	**0.0368**	**1.13**	0.0351 U	**0.0978**	**0.0578**	**0.0594**	**0.0785**	0.0358 U	**319**	**77.1**
Total Petroleum Hydrocarbons																										
(mg/kg)	TPH	1,000	1,000	10,000	NA	36.7 U	37.0 U	NA	NA	37.2 U	**108**	NA	NA	NA	NA	NA	NA	NA	35.4 U	NA	NA	35.8 U	NA	36.8 U	**482**	40.1 U
Total Organic Carbon																										
(%)	Total Organic Carbon (Rep1)	N/A	N/A	N/A	NA	NA	NA	NA	NA	NA	NA	NA	NA	NA	NA	NA	NA	NA	NA	NA	NA	NA	NA	NA	NA	NA
	Total Organic Carbon (Rep2)	N/A	N/A	N/A	NA	NA	NA	NA	NA	NA	NA	NA	NA	NA	NA	NA	NA	NA	NA	NA	NA	NA	NA	NA	NA	NA

Notes:
mg/kg - milligrams per kilogram (dry weight) or parts per million (ppm).
E - Value exceeds calibration range.
NA - Sample not analyzed for the listed analyte.
N/A - not applicable.
NS - No MassDEP standards exist for this analyte.
U - Compound was not detected at specified quantitation limit.
Values shown in **bold** indicate the compound was detected.
VOCs - Volatile Organic Compounds.
PCBs - Polychlorinated Biphenyls.
UCL - Upper Concentration Limit.
(1) - MassDEP Method 1 standards for C9-C10 aromatics used.
(2) - MassDEP Method 1 standards for 1,3-Dichloropropene used.
* - Sample depth for Other/VOC analysis; otherwise the sample depth applies to all listed analyses.

Table 6
Summary of Analytical Results for Soil Samples - 2010 through 2014
New Bedford High School
New Bedford, Massachusetts

Analysis	Analyte			Sample Location:	**BF-1**			**BF-2**						**BF-3**					**BF-4**				
				Sample ID:	BF-1	BF-1	BF-1	BF-2	BF-2	BF-2	Dup-1	BF-2	BF-2	BF-3	BF-3	BF-3	BF-3	BF-3	BF-4	BF-4	BF-4	BF-4	BF-4
				Sample Depth (ft.)*:	2-4	4-6	6-8	2-4	4-6	6-8	6-8	8-10	10-12	2-4	4-6	6-8	8-10	10-12	2-4	4-6	6-8	8-10	10-12
				Sample Date:	2/18/2014	2/18/2014	2/18/2014	2/18/2014	2/18/2014	2/18/2014	2/18/2014	2/18/2014	2/18/2014	2/19/2014	2/19/2014	2/19/2014	2/19/2014	2/19/2014	2/19/2014	2/19/2014	2/19/2014	2/19/2014	2/19/2014
		S-1/GW-2	S-1/GW-3	UCL							Field Dup												
VOCs																							
(mg/kg)	Acetone	50	400	10,000	NA	NA	NA	NA	NA	NA	NA	NA	NA	NA	NA	NA	NA	NA	NA	NA	NA	NA	NA
	Tertiary-Amyl Methyl Ether	NS	NS	NS	NA	NA	NA	NA	NA	NA	NA	NA	NA	NA	NA	NA	NA	NA	NA	NA	NA	NA	NA
	Benzene	40	40	10,000	NA	NA	NA	NA	NA	NA	NA	NA	NA	NA	NA	NA	NA	NA	NA	NA	NA	NA	NA
	Bromobenzene	NS	NS	NS	NA	NA	NA	NA	NA	NA	NA	NA	NA	NA	NA	NA	NA	NA	NA	NA	NA	NA	NA
	Bromochloromethane	NS	NS	NS	NA	NA	NA	NA	NA	NA	NA	NA	NA	NA	NA	NA	NA	NA	NA	NA	NA	NA	NA
	Bromodichloromethane	0.1	30	5,000	NA	NA	NA	NA	NA	NA	NA	NA	NA	NA	NA	NA	NA	NA	NA	NA	NA	NA	NA
	Bromoform	1	300	10,000	NA	NA	NA	NA	NA	NA	NA	NA	NA	NA	NA	NA	NA	NA	NA	NA	NA	NA	NA
	Bromomethane	0.5	30	6,000	NA	NA	NA	NA	NA	NA	NA	NA	NA	NA	NA	NA	NA	NA	NA	NA	NA	NA	NA
	2-Butanone	50	400	10,000	NA	NA	NA	NA	NA	NA	NA	NA	NA	NA	NA	NA	NA	NA	NA	NA	NA	NA	NA
	n-Butylbenzene	100[1]	100[1]	5,000[1]	NA	NA	NA	NA	NA	NA	NA	NA	NA	NA	NA	NA	NA	NA	NA	NA	NA	NA	NA
	sec-Butylbenzene	100[1]	100[1]	5,000[1]	NA	NA	NA	NA	NA	NA	NA	NA	NA	NA	NA	NA	NA	NA	NA	NA	NA	NA	NA
	tert-Butylbenzene	100[1]	100[1]	5,000[1]	NA	NA	NA	NA	NA	NA	NA	NA	NA	NA	NA	NA	NA	NA	NA	NA	NA	NA	NA
	Ethyl-Tert-Butyl-Ether	NS	NS	NS	NA	NA	NA	NA	NA	NA	NA	NA	NA	NA	NA	NA	NA	NA	NA	NA	NA	NA	NA
	Carbon disulfide	NS	NS	NS	NA	NA	NA	NA	NA	NA	NA	NA	NA	NA	NA	NA	NA	NA	NA	NA	NA	NA	NA
	Carbon tetrachloride	5	30	10,000	NA	NA	NA	NA	NA	NA	NA	NA	NA	NA	NA	NA	NA	NA	NA	NA	NA	NA	NA
	Chlorobenzene	3	100	10,000	NA	NA	NA	NA	NA	NA	NA	NA	NA	NA	NA	NA	NA	NA	NA	NA	NA	NA	NA
	Dibromochloromethane	0.03	20	5,000	NA	NA	NA	NA	NA	NA	NA	NA	NA	NA	NA	NA	NA	NA	NA	NA	NA	NA	NA
	Chloroethane	NS	NS	NS	NA	NA	NA	NA	NA	NA	NA	NA	NA	NA	NA	NA	NA	NA	NA	NA	NA	NA	NA
	Chloroform	0.2	500	10,000	NA	NA	NA	NA	NA	NA	NA	NA	NA	NA	NA	NA	NA	NA	NA	NA	NA	NA	NA
	Chloromethane	NS	NS	NS	NA	NA	NA	NA	NA	NA	NA	NA	NA	NA	NA	NA	NA	NA	NA	NA	NA	NA	NA
	o-Chlorotoluene	NS	NS	NS	NA	NA	NA	NA	NA	NA	NA	NA	NA	NA	NA	NA	NA	NA	NA	NA	NA	NA	NA
	p-Chlorotoluene	NS	NS	NS	NA	NA	NA	NA	NA	NA	NA	NA	NA	NA	NA	NA	NA	NA	NA	NA	NA	NA	NA
	1,2-Dibromo-3-chloropropane	NS	NS	NS	NA	NA	NA	NA	NA	NA	NA	NA	NA	NA	NA	NA	NA	NA	NA	NA	NA	NA	NA
	1,2-Dibromoethane	0.1	1	400	NA	NA	NA	NA	NA	NA	NA	NA	NA	NA	NA	NA	NA	NA	NA	NA	NA	NA	NA
	Dibromomethane	NS	NS	NS	NA	NA	NA	NA	NA	NA	NA	NA	NA	NA	NA	NA	NA	NA	NA	NA	NA	NA	NA
	1,2-Dichlorobenzene	100	300	10,000	NA	NA	NA	NA	NA	NA	NA	NA	NA	NA	NA	NA	NA	NA	NA	NA	NA	NA	NA
	1,3-Dichlorobenzene	100	100	5,000	NA	NA	NA	NA	NA	NA	NA	NA	NA	NA	NA	NA	NA	NA	NA	NA	NA	NA	NA
	1,4-Dichlorobenzene	1	80	10,000	NA	NA	NA	NA	NA	NA	NA	NA	NA	NA	NA	NA	NA	NA	NA	NA	NA	NA	NA
	Dichlorodifluoromethane	NS	NS	NS	NA	NA	NA	NA	NA	NA	NA	NA	NA	NA	NA	NA	NA	NA	NA	NA	NA	NA	NA
	1,1-Dichloroethane	9	500	10,000	NA	NA	NA	NA	NA	NA	NA	NA	NA	NA	NA	NA	NA	NA	NA	NA	NA	NA	NA
	1,2-Dichloroethane	0.1	20	9,000	NA	NA	NA	NA	NA	NA	NA	NA	NA	NA	NA	NA	NA	NA	NA	NA	NA	NA	NA
	1,1-Dichloroethene	40	500	10,000	NA	NA	NA	NA	NA	NA	NA	NA	NA	NA	NA	NA	NA	NA	NA	NA	NA	NA	NA
	cis-1,2-Dichloroethene	0.1	100	5,000	NA	NA	NA	NA	NA	NA	NA	NA	NA	NA	NA	NA	NA	NA	NA	NA	NA	NA	NA
	trans-1,2-Dichloroethene	1	500	10,000	NA	NA	NA	NA	NA	NA	NA	NA	NA	NA	NA	NA	NA	NA	NA	NA	NA	NA	NA
	1,2-Dichloropropane	0.1	30	10,000	NA	NA	NA	NA	NA	NA	NA	NA	NA	NA	NA	NA	NA	NA	NA	NA	NA	NA	NA
	1,3-Dichloropropane	NS	NS	NS	NA	NA	NA	NA	NA	NA	NA	NA	NA	NA	NA	NA	NA	NA	NA	NA	NA	NA	NA
	2,2-Dichloropropane	NS	NS	NS	NA	NA	NA	NA	NA	NA	NA	NA	NA	NA	NA	NA	NA	NA	NA	NA	NA	NA	NA
	1,1-Dichloropropene	NS	NS	NS	NA	NA	NA	NA	NA	NA	NA	NA	NA	NA	NA	NA	NA	NA	NA	NA	NA	NA	NA
	cis-1,3-Dichloropropene	0.4[2]	20[2]	9,000[2]	NA	NA	NA	NA	NA	NA	NA	NA	NA	NA	NA	NA	NA	NA	NA	NA	NA	NA	NA
	trans-1,3-Dichloropropene	0.4[2]	20[2]	9,000[2]	NA	NA	NA	NA	NA	NA	NA	NA	NA	NA	NA	NA	NA	NA	NA	NA	NA	NA	NA
	Ethyl ether	NS	NS	NS	NA	NA	NA	NA	NA	NA	NA	NA	NA	NA	NA	NA	NA	NA	NA	NA	NA	NA	NA
	Isopropyl Ether	NS	NS	NS	NA	NA	NA	NA	NA	NA	NA	NA	NA	NA	NA	NA	NA	NA	NA	NA	NA	NA	NA
	1,4-Dioxane	6	20	5,000	NA	NA	NA	NA	NA	NA	NA	NA	NA	NA	NA	NA	NA	NA	NA	NA	NA	NA	NA
	Ethylbenzene	500	500	10,000	NA	NA	NA	NA	NA	NA	NA	NA	NA	NA	NA	NA	NA	NA	NA	NA	NA	NA	NA
	Hexachlorobutadiene	30	30	1,000	NA	NA	NA	NA	NA	NA	NA	NA	NA	NA	NA	NA	NA	NA	NA	NA	NA	NA	NA
	2-Hexanone	NS	NS	NS	NA	NA	NA	NA	NA	NA	NA	NA	NA	NA	NA	NA	NA	NA	NA	NA	NA	NA	NA
	Isopropylbenzene	100[1]	100[1]	5,000[1]	NA	NA	NA	NA	NA	NA	NA	NA	NA	NA	NA	NA	NA	NA	NA	NA	NA	NA	NA
	p-Isopropyltoluene	100[1]	100[1]	5,000[1]	NA	NA	NA	NA	NA	NA	NA	NA	NA	NA	NA	NA	NA	NA	NA	NA	NA	NA	NA
	Methyl tert butyl ether	100	100	5,000	NA	NA	NA	NA	NA	NA	NA	NA	NA	NA	NA	NA	NA	NA	NA	NA	NA	NA	NA
	Methylene chloride	4	400	7000	NA	NA	NA	NA	NA	NA	NA	NA	NA	NA	NA	NA	NA	NA	NA	NA	NA	NA	NA
	4-Methyl-2-pentanone	50	400	10,000	NA	NA	NA	NA	NA	NA	NA	NA	NA	NA	NA	NA	NA	NA	NA	NA	NA	NA	NA
	Naphthalene	20	500	10,000	NA	NA	NA	NA	NA	NA	NA	NA	NA	NA	NA	NA	NA	NA	NA	NA	NA	NA	NA
	n-Propylbenzene	100[1]	100[1]	5,000[1]	NA	NA	NA	NA	NA	NA	NA	NA	NA	NA	NA	NA	NA	NA	NA	NA	NA	NA	NA
	Styrene	4	70	10,000	NA	NA	NA	NA	NA	NA	NA	NA	NA	NA	NA	NA	NA	NA	NA	NA	NA	NA	NA
	1,1,1,2-Tetrachloroethane	0.1	80	5,000	NA	NA	NA	NA	NA	NA	NA	NA	NA	NA	NA	NA	NA	NA	NA	NA	NA	NA	NA
	1,1,2,2-Tetrachloroethane	0.02	10	4000	NA	NA	NA	NA	NA	NA	NA	NA	NA	NA	NA	NA	NA	NA	NA	NA	NA	NA	NA
	Tetrachloroethene	10	30	10,000	NA	NA	NA	NA	NA	NA	NA	NA	NA	NA	NA	NA	NA	NA	NA	NA	NA	NA	NA
	Tetrahydrofuran	NS	NS	NS	NA	NA	NA	NA	NA	NA	NA	NA	NA	NA	NA	NA	NA	NA	NA	NA	NA	NA	NA
	Toluene	500	500	10,000	NA	NA	NA	NA	NA	NA	NA	NA	NA	NA	NA	NA	NA	NA	NA	NA	NA	NA	NA
	1,2,3-Trichlorobenzene	NS	NS	NS	NA	NA	NA	NA	NA	NA	NA	NA	NA	NA	NA	NA	NA	NA	NA	NA	NA	NA	NA
	1,2,4-Trichlorobenzene	6	700	10,000	NA	NA	NA	NA	NA	NA	NA	NA	NA	NA	NA	NA	NA	NA	NA	NA	NA	NA	NA
	1,1,1-Trichloroethane	500	500	10,000	NA	NA	NA	NA	NA	NA	NA	NA	NA	NA	NA	NA	NA	NA	NA	NA	NA	NA	NA
	1,1,2-Trichloroethane	2	40	5,000	NA	NA	NA	NA	NA	NA	NA	NA	NA	NA	NA	NA	NA	NA	NA	NA	NA	NA	NA
	Trichloroethene	0.3	30	600	NA	NA	NA	NA	NA	NA	NA	NA	NA	NA	NA	NA	NA	NA	NA	NA	NA	NA	NA

Table 6
Summary of Analytical Results for Soil Samples - 2010 through 2014
New Bedford High School
New Bedford, Massachusetts

Analysis	Analyte			Sample Location:	**BF-1**			**BF-2**						**BF-3**					**BF-4**				
				Sample ID:	BF-1	BF-1	BF-1	BF-2	BF-2	BF-2	Dup-1	BF-2	BF-2	BF-3	BF-3	BF-3	BF-3	BF-3	BF-4	BF-4	BF-4	BF-4	BF-4
				Sample Depth (ft.)*:	2-4	4-6	6-8	2-4	4-6	6-8	6-8	8-10	10-12	2-4	4-6	6-8	8-10	10-12	2-4	4-6	6-8	8-10	10-12
				Sample Date:	2/18/2014	2/18/2014	2/18/2014	2/18/2014	2/18/2014	2/18/2014	2/18/2014	2/18/2014	2/18/2014	2/19/2014	2/19/2014	2/19/2014	2/19/2014	2/19/2014	2/19/2014	2/19/2014	2/19/2014	2/19/2014	2/19/2014
		S-1/GW-2	S-1/GW-3	UCL							Field Dup												
	Trichlorofluoromethane	NS	NS	NS	NA	NA	NA	NA	NA	NA	NA	NA	NA	NA	NA	NA	NA	NA	NA	NA	NA	NA	NA
	1,2,3-Trichloropropane	NS	NS	NS	NA	NA	NA	NA	NA	NA	NA	NA	NA	NA	NA	NA	NA	NA	NA	NA	NA	NA	NA
	1,2,4-Trimethylbenzene	100(1)	100(1)	5,000(1)	NA	NA	NA	NA	NA	NA	NA	NA	NA	NA	NA	NA	NA	NA	NA	NA	NA	NA	NA
	1,3,5-Trimethylbenzene	100(1)	100(1)	5,000(1)	NA	NA	NA	NA	NA	NA	NA	NA	NA	NA	NA	NA	NA	NA	NA	NA	NA	NA	NA
	Vinyl chloride	0.7	1	600	NA	NA	NA	NA	NA	NA	NA	NA	NA	NA	NA	NA	NA	NA	NA	NA	NA	NA	NA
	p/m-Xylene	100	500	10,000	NA	NA	NA	NA	NA	NA	NA	NA	NA	NA	NA	NA	NA	NA	NA	NA	NA	NA	NA
	o-Xylene	100	500	10,000	NA	NA	NA	NA	NA	NA	NA	NA	NA	NA	NA	NA	NA	NA	NA	NA	NA	NA	NA
PCBs																							
(mg/kg)	Aroclor 1016	1	1	100	0.11 U	2.1 U	0.12 U	0.11 U	0.10 U	89 U	44 U	45 U	11 U	0.11 U	2.1 U	0.11 U	0.11 U	0.11 U	0.11 U	2.1 U	2.2 U	2.3 U	0.11 U
	Aroclor 1221	1	1	100	0.11 U	2.1 U	0.12 U	0.11 U	0.10 U	89 U	44 U	45 U	11 U	0.11 U	2.1 U	0.11 U	0.11 U	0.11 U	0.11 U	2.1 U	2.2 U	2.3 U	0.11 U
	Aroclor 1232	1	1	100	0.11 U	2.1 U	0.12 U	0.11 U	0.10 U	89 U	44 U	45 U	11 U	0.11 U	2.1 U	0.11 U	0.11 U	0.11 U	0.11 U	2.1 U	2.2 U	2.3 U	0.11 U
	Aroclor 1242	1	1	100	0.11 U	2.1 U	0.12 U	0.11 U	0.10 U	89 U	44 U	45 U	11 U	0.11 U	2.1 U	0.11 U	0.11 U	0.11 U	0.11 U	2.1 U	2.2 U	2.3 U	0.11 U
	Aroclor 1248	1	1	100	0.11 U	2.1 U	0.12 U	0.11 U	0.10 U	**380**	**120**	**130**	**35**	0.11 U	2.1 U	0.11 U	0.11 U	0.11 U	0.11 U	2.1 U	2.2 U	2.3 U	0.11 U
	Aroclor 1254	1	1	100	0.11 U	**8.5**	0.12 U	**0.11**	0.10 U	**860**	**270**	**310**	**94**	0.11 U	**14**	**0.34**	0.11 U	0.11 U	0.11 U	**18**	**13**	**16**	**0.30**
	Aroclor 1260	1	1	100	0.11 U	2.1 U	0.12 U	0.11 U	0.10 U	89 U	44 U	45 U	11 U	0.11 U	2.1 U	0.11 U	0.11 U	0.11 U	0.11 U	2.1 U	2.2 U	2.3 U	0.11 U
	Aroclor 1262	1	1	100	0.11 U	2.1 U	0.12 U	0.11 U	0.10 U	89 U	44 U	45 U	11 U	0.11 U	2.1 U	0.11 U	0.11 U	0.11 U	0.11 U	2.1 U	2.2 U	2.3 U	0.11 U
	Aroclor 1268	1	1	100	0.11 U	2.1 U	0.12 U	0.11 U	0.10 U	89 U	44 U	45 U	11 U	0.11 U	2.1 U	0.11 U	0.11 U	0.11 U	0.11 U	2.1 U	2.2 U	2.3 U	0.11 U
	Total PCBs	1	1	100	0.11 U	**8.5**	0.12 U	**0.11**	0.10 U	**1,240**	**390**	**440**	**129**	0.11 U	**14**	**0.34**	0.11 U	0.11 U	0.11 U	**18**	**13**	**16**	**0.30**
Total Petroleum Hydrocarbons																							
(mg/kg)	TPH	1,000	1,000	10,000	NA	NA	NA	NA	NA	NA	NA	NA	NA	NA	NA	NA	NA	NA	NA	NA	NA	NA	NA
Total Organic Carbon																							
(%)	Total Organic Carbon (Rep1)	N/A	N/A	N/A	NA	NA	NA	NA	NA	NA	NA	NA	NA	NA	NA	NA	NA	NA	NA	NA	NA	NA	NA
	Total Organic Carbon (Rep2)	N/A	N/A	N/A	NA	NA	NA	NA	NA	NA	NA	NA	NA	NA	NA	NA	NA	NA	NA	NA	NA	NA	NA

Notes:
mg/kg - milligrams per kilogram (dry weight) or parts per million (ppm).
E - Value exceeds calibration range.
NA - Sample not analyzed for the listed analyte.
N/A - not applicable.
NS - No MassDEP standards exist for this analyte.
U - Compound was not detected at specified quantitation limit.
Values shown in **bold** indicate the compound was detected.
VOCs - Volatile Organic Compounds.
PCBs - Polychlorinated Biphenyls.
UCL - Upper Concentration Limit.
(1) - MassDEP Method 1 standards for C9-C10 aromatics used.
(2) - MassDEP Method 1 standards for 1,3-Dichloropropene used.
* - Sample depth for Other/VOC analysis; otherwise the sample depth applies to all listed analyses.

Table 6
Summary of Analytical Results for Soil Samples - 2010 through 2014
New Bedford High School
New Bedford, Massachusetts

Analysis	Analyte			Sample Location:	**BF-5**					**BF-6**						**BF-7**				
				Sample ID:	BF-5	BF-5	BF-5	BF-5	BF-5	BF-6	BF-6	BF-6	BF-6	DUP-2	BF-6	BF-7	BF-7	BF-7	BF-7	BF-7
				Sample Depth (ft.)*:	2-4	4-6	6-8	8-10	10-12	2-4	4-6	6-8	8-10	8-10	10-12	2-4	4-6	6-8	8-10	10-12
				Sample Date:	2/19/2014	2/19/2014	2/19/2014	2/19/2014	2/19/2014	2/19/2014	2/19/2014	2/19/2014	2/19/2014	2/19/2014	2/19/2014	2/19/2014	2/19/2014	2/19/2014	2/19/2014	2/19/2014
		S-1/GW-2	S-1/GW-3	UCL										Field Dup						
VOCs																				
(mg/kg)	Acetone	50	400	10,000	NA	NA	NA	NA	NA	NA	NA	NA	NA	NA	NA	NA	NA	NA	NA	NA
	Tertiary-Amyl Methyl Ether	NS	NS	NS	NA	NA	NA	NA	NA	NA	NA	NA	NA	NA	NA	NA	NA	NA	NA	NA
	Benzene	40	40	10,000	NA	NA	NA	NA	NA	NA	NA	NA	NA	NA	NA	NA	NA	NA	NA	NA
	Bromobenzene	NS	NS	NS	NA	NA	NA	NA	NA	NA	NA	NA	NA	NA	NA	NA	NA	NA	NA	NA
	Bromochloromethane	NS	NS	NS	NA	NA	NA	NA	NA	NA	NA	NA	NA	NA	NA	NA	NA	NA	NA	NA
	Bromodichloromethane	0.1	30	5,000	NA	NA	NA	NA	NA	NA	NA	NA	NA	NA	NA	NA	NA	NA	NA	NA
	Bromoform	1	300	10,000	NA	NA	NA	NA	NA	NA	NA	NA	NA	NA	NA	NA	NA	NA	NA	NA
	Bromomethane	0.5	30	6,000	NA	NA	NA	NA	NA	NA	NA	NA	NA	NA	NA	NA	NA	NA	NA	NA
	2-Butanone	50	400	10,000	NA	NA	NA	NA	NA	NA	NA	NA	NA	NA	NA	NA	NA	NA	NA	NA
	n-Butylbenzene	100[1]	100[1]	5,000[1]	NA	NA	NA	NA	NA	NA	NA	NA	NA	NA	NA	NA	NA	NA	NA	NA
	sec-Butylbenzene	100[1]	100[1]	5,000[1]	NA	NA	NA	NA	NA	NA	NA	NA	NA	NA	NA	NA	NA	NA	NA	NA
	tert-Butylbenzene	100[1]	100[1]	5,000[1]	NA	NA	NA	NA	NA	NA	NA	NA	NA	NA	NA	NA	NA	NA	NA	NA
	Ethyl-Tert-Butyl-Ether	NS	NS	NS	NA	NA	NA	NA	NA	NA	NA	NA	NA	NA	NA	NA	NA	NA	NA	NA
	Carbon disulfide	NS	NS	NS	NA	NA	NA	NA	NA	NA	NA	NA	NA	NA	NA	NA	NA	NA	NA	NA
	Carbon tetrachloride	5	30	10,000	NA	NA	NA	NA	NA	NA	NA	NA	NA	NA	NA	NA	NA	NA	NA	NA
	Chlorobenzene	3	100	10,000	NA	NA	NA	NA	NA	NA	NA	NA	NA	NA	NA	NA	NA	NA	NA	NA
	Dibromochloromethane	0.03	20	5,000	NA	NA	NA	NA	NA	NA	NA	NA	NA	NA	NA	NA	NA	NA	NA	NA
	Chloroethane	NS	NS	NS	NA	NA	NA	NA	NA	NA	NA	NA	NA	NA	NA	NA	NA	NA	NA	NA
	Chloroform	0.2	500	10,000	NA	NA	NA	NA	NA	NA	NA	NA	NA	NA	NA	NA	NA	NA	NA	NA
	Chloromethane	NS	NS	NS	NA	NA	NA	NA	NA	NA	NA	NA	NA	NA	NA	NA	NA	NA	NA	NA
	o-Chlorotoluene	NS	NS	NS	NA	NA	NA	NA	NA	NA	NA	NA	NA	NA	NA	NA	NA	NA	NA	NA
	p-Chlorotoluene	NS	NS	NS	NA	NA	NA	NA	NA	NA	NA	NA	NA	NA	NA	NA	NA	NA	NA	NA
	1,2-Dibromo-3-chloropropane	NS	NS	NS	NA	NA	NA	NA	NA	NA	NA	NA	NA	NA	NA	NA	NA	NA	NA	NA
	1,2-Dibromoethane	0.1	1	400	NA	NA	NA	NA	NA	NA	NA	NA	NA	NA	NA	NA	NA	NA	NA	NA
	Dibromomethane	NS	NS	NS	NA	NA	NA	NA	NA	NA	NA	NA	NA	NA	NA	NA	NA	NA	NA	NA
	1,2-Dichlorobenzene	100	300	10,000	NA	NA	NA	NA	NA	NA	NA	NA	NA	NA	NA	NA	NA	NA	NA	NA
	1,3-Dichlorobenzene	100	100	5,000	NA	NA	NA	NA	NA	NA	NA	NA	NA	NA	NA	NA	NA	NA	NA	NA
	1,4-Dichlorobenzene	1	80	10,000	NA	NA	NA	NA	NA	NA	NA	NA	NA	NA	NA	NA	NA	NA	NA	NA
	Dichlorodifluoromethane	NS	NS	NS	NA	NA	NA	NA	NA	NA	NA	NA	NA	NA	NA	NA	NA	NA	NA	NA
	1,1-Dichloroethane	9	500	10,000	NA	NA	NA	NA	NA	NA	NA	NA	NA	NA	NA	NA	NA	NA	NA	NA
	1,2-Dichloroethane	0.1	20	9,000	NA	NA	NA	NA	NA	NA	NA	NA	NA	NA	NA	NA	NA	NA	NA	NA
	1,1-Dichloroethene	40	500	10,000	NA	NA	NA	NA	NA	NA	NA	NA	NA	NA	NA	NA	NA	NA	NA	NA
	cis-1,2-Dichloroethene	0.1	100	5,000	NA	NA	NA	NA	NA	NA	NA	NA	NA	NA	NA	NA	NA	NA	NA	NA
	trans-1,2-Dichloroethene	1	500	10,000	NA	NA	NA	NA	NA	NA	NA	NA	NA	NA	NA	NA	NA	NA	NA	NA
	1,2-Dichloropropane	0.1	30	10,000	NA	NA	NA	NA	NA	NA	NA	NA	NA	NA	NA	NA	NA	NA	NA	NA
	1,3-Dichloropropane	NS	NS	NS	NA	NA	NA	NA	NA	NA	NA	NA	NA	NA	NA	NA	NA	NA	NA	NA
	2,2-Dichloropropane	NS	NS	NS	NA	NA	NA	NA	NA	NA	NA	NA	NA	NA	NA	NA	NA	NA	NA	NA
	1,1-Dichloropropene	NS	NS	NS	NA	NA	NA	NA	NA	NA	NA	NA	NA	NA	NA	NA	NA	NA	NA	NA
	cis-1,3-Dichloropropene	0.4[2]	20[2]	9,000[2]	NA	NA	NA	NA	NA	NA	NA	NA	NA	NA	NA	NA	NA	NA	NA	NA
	trans-1,3-Dichloropropene	0.4[2]	20[2]	9,000[2]	NA	NA	NA	NA	NA	NA	NA	NA	NA	NA	NA	NA	NA	NA	NA	NA
	Ethyl ether	NS	NS	NS	NA	NA	NA	NA	NA	NA	NA	NA	NA	NA	NA	NA	NA	NA	NA	NA
	Isopropyl Ether	NS	NS	NS	NA	NA	NA	NA	NA	NA	NA	NA	NA	NA	NA	NA	NA	NA	NA	NA
	1,4-Dioxane	6	20	5,000	NA	NA	NA	NA	NA	NA	NA	NA	NA	NA	NA	NA	NA	NA	NA	NA
	Ethylbenzene	500	500	10,000	NA	NA	NA	NA	NA	NA	NA	NA	NA	NA	NA	NA	NA	NA	NA	NA
	Hexachlorobutadiene	30	30	1,000	NA	NA	NA	NA	NA	NA	NA	NA	NA	NA	NA	NA	NA	NA	NA	NA
	2-Hexanone	NS	NS	NS	NA	NA	NA	NA	NA	NA	NA	NA	NA	NA	NA	NA	NA	NA	NA	NA
	Isopropylbenzene	100[1]	100[1]	5,000[1]	NA	NA	NA	NA	NA	NA	NA	NA	NA	NA	NA	NA	NA	NA	NA	NA
	p-Isopropyltoluene	100[1]	100[1]	5,000[1]	NA	NA	NA	NA	NA	NA	NA	NA	NA	NA	NA	NA	NA	NA	NA	NA
	Methyl tert butyl ether	100	100	5,000	NA	NA	NA	NA	NA	NA	NA	NA	NA	NA	NA	NA	NA	NA	NA	NA
	Methylene chloride	4	400	7000	NA	NA	NA	NA	NA	NA	NA	NA	NA	NA	NA	NA	NA	NA	NA	NA
	4-Methyl-2-pentanone	50	400	10,000	NA	NA	NA	NA	NA	NA	NA	NA	NA	NA	NA	NA	NA	NA	NA	NA
	Naphthalene	20	500	10,000	NA	NA	NA	NA	NA	NA	NA	NA	NA	NA	NA	NA	NA	NA	NA	NA
	n-Propylbenzene	100[1]	100[1]	5,000[1]	NA	NA	NA	NA	NA	NA	NA	NA	NA	NA	NA	NA	NA	NA	NA	NA
	Styrene	4	70	10,000	NA	NA	NA	NA	NA	NA	NA	NA	NA	NA	NA	NA	NA	NA	NA	NA
	1,1,1,2-Tetrachloroethane	0.1	80	5,000	NA	NA	NA	NA	NA	NA	NA	NA	NA	NA	NA	NA	NA	NA	NA	NA
	1,1,2,2-Tetrachloroethane	0.02	10	4000	NA	NA	NA	NA	NA	NA	NA	NA	NA	NA	NA	NA	NA	NA	NA	NA
	Tetrachloroethene	10	30	10,000	NA	NA	NA	NA	NA	NA	NA	NA	NA	NA	NA	NA	NA	NA	NA	NA
	Tetrahydrofuran	NS	NS	NS	NA	NA	NA	NA	NA	NA	NA	NA	NA	NA	NA	NA	NA	NA	NA	NA
	Toluene	500	500	10,000	NA	NA	NA	NA	NA	NA	NA	NA	NA	NA	NA	NA	NA	NA	NA	NA
	1,2,3-Trichlorobenzene	NS	NS	NS	NA	NA	NA	NA	NA	NA	NA	NA	NA	NA	NA	NA	NA	NA	NA	NA
	1,2,4-Trichlorobenzene	6	700	10,000	NA	NA	NA	NA	NA	NA	NA	NA	NA	NA	NA	NA	NA	NA	NA	NA
	1,1,1-Trichloroethane	500	500	10,000	NA	NA	NA	NA	NA	NA	NA	NA	NA	NA	NA	NA	NA	NA	NA	NA
	1,1,2-Trichloroethane	2	40	5,000	NA	NA	NA	NA	NA	NA	NA	NA	NA	NA	NA	NA	NA	NA	NA	NA
	Trichloroethene	0.3	30	600	NA	NA	NA	NA	NA	NA	NA	NA	NA	NA	NA	NA	NA	NA	NA	NA

Table 6
Summary of Analytical Results for Soil Samples - 2010 through 2014
New Bedford High School
New Bedford, Massachusetts

Analysis	Analyte			Sample Location:	**BF-5**					**BF-6**						**BF-7**				
				Sample ID:	BF-5	BF-5	BF-5	BF-5	BF-5	BF-6	BF-6	BF-6	BF-6	DUP-2	BF-6	BF-7	BF-7	BF-7	BF-7	BF-7
				Sample Depth (ft.)*:	2-4	4-6	6-8	8-10	10-12	2-4	4-6	6-8	8-10	8-10	10-12	2-4	4-6	6-8	8-10	10-12
				Sample Date:	2/19/2014	2/19/2014	2/19/2014	2/19/2014	2/19/2014	2/19/2014	2/19/2014	2/19/2014	2/19/2014	2/19/2014	2/19/2014	2/19/2014	2/19/2014	2/19/2014	2/19/2014	2/19/2014
		S-1/GW-2	S-1/GW-3	UCL										Field Dup						
	Trichlorofluoromethane	NS	NS	NS	NA	NA	NA	NA	NA	NA	NA	NA	NA	NA	NA	NA	NA	NA	NA	NA
	1,2,3-Trichloropropane	NS	NS	NS	NA	NA	NA	NA	NA	NA	NA	NA	NA	NA	NA	NA	NA	NA	NA	NA
	1,2,4-Trimethylbenzene	100(1)	100(1)	5,000(1)	NA	NA	NA	NA	NA	NA	NA	NA	NA	NA	NA	NA	NA	NA	NA	NA
	1,3,5-Trimethylbenzene	100(1)	100(1)	5,000(1)	NA	NA	NA	NA	NA	NA	NA	NA	NA	NA	NA	NA	NA	NA	NA	NA
	Vinyl chloride	0.7	1	600	NA	NA	NA	NA	NA	NA	NA	NA	NA	NA	NA	NA	NA	NA	NA	NA
	p/m-Xylene	100	500	10,000	NA	NA	NA	NA	NA	NA	NA	NA	NA	NA	NA	NA	NA	NA	NA	NA
	o-Xylene	100	500	10,000	NA	NA	NA	NA	NA	NA	NA	NA	NA	NA	NA	NA	NA	NA	NA	NA
PCBs																				
(mg/kg)	Aroclor 1016	1	1	100	0.42 U	0.11 U	0.11 U	0.11 U	0.11 U	0.11 U	0.12 U	0.11 U	0.12 U	0.11 U	0.12 U	0.11 U	0.11 U	0.12 U	0.12 U	0.11 U
	Aroclor 1221	1	1	100	0.42 U	0.11 U	0.11 U	0.11 U	0.11 U	0.11 U	0.12 U	0.11 U	0.12 U	0.11 U	0.12 U	0.11 U	0.11 U	0.12 U	0.12 U	0.11 U
	Aroclor 1232	1	1	100	0.42 U	0.11 U	0.11 U	0.11 U	0.11 U	0.11 U	0.12 U	0.11 U	0.12 U	0.11 U	0.12 U	0.11 U	0.11 U	0.12 U	0.12 U	0.11 U
	Aroclor 1242	1	1	100	0.42 U	0.11 U	0.11 U	0.11 U	0.11 U	0.11 U	0.12 U	0.11 U	0.12 U	0.11 U	0.12 U	0.11 U	0.11 U	0.12 U	0.12 U	0.11 U
	Aroclor 1248	1	1	100	0.42 U	0.11 U	0.11 U	0.11 U	0.11 U	0.11 U	**0.21**	0.11 U	0.12 U	0.11 U	0.12 U	0.11 U	0.11 U	0.12 U	0.12 U	0.11 U
	Aroclor 1254	1	1	100	**1.8**	**0.74**	0.11 U	0.11 U	0.11 U	**0.32**	**0.45**	0.11 U	0.12 U	0.11 U	0.12 U	0.11 U	0.11 U	0.12 U	0.12 U	0.11 U
	Aroclor 1260	1	1	100	0.42 U	0.11 U	0.11 U	0.11 U	0.11 U	0.11 U	0.12 U	0.11 U	0.12 U	0.11 U	0.12 U	0.11 U	0.11 U	0.12 U	0.12 U	0.11 U
	Aroclor 1262	1	1	100	0.42 U	0.11 U	0.11 U	0.11 U	0.11 U	0.11 U	0.12 U	0.11 U	0.12 U	0.11 U	0.12 U	0.11 U	0.11 U	0.12 U	0.12 U	0.11 U
	Aroclor 1268	1	1	100	0.42 U	0.11 U	0.11 U	0.11 U	0.11 U	0.11 U	0.12 U	0.11 U	0.12 U	0.11 U	0.12 U	0.11 U	0.11 U	0.12 U	0.12 U	0.11 U
	Total PCBs	1	1	100	**1.8**	**0.74**	0.11 U	0.11 U	0.11 U	**0.32**	**0.66**	0.11 U	0.12 U	0.11 U	0.12 U	0.11 U	0.11 U	0.12 U	0.12 U	0.11 U
Total Petroleum Hydrocarbons																				
(mg/kg)	TPH	1,000	1,000	10,000	NA	NA	NA	NA	NA	NA	NA	NA	NA	NA	NA	NA	NA	NA	NA	NA
Total Organic Carbon																				
(%)	Total Organic Carbon (Rep1)	N/A	N/A	N/A	NA	NA	NA	NA	NA	NA	NA	NA	NA	NA	NA	NA	NA	NA	NA	NA
	Total Organic Carbon (Rep2)	N/A	N/A	N/A	NA	NA	NA	NA	NA	NA	NA	NA	NA	NA	NA	NA	NA	NA	NA	NA

Notes:

mg/kg - milligrams per kilogram (dry weight) or parts per million (ppm).
E - Value exceeds calibration range.
NA - Sample not analyzed for the listed analyte.
N/A - not applicable.
NS - No MassDEP standards exist for this analyte.
U - Compound was not detected at specified quantitation limit.
Values shown in **bold** indicate the compound was detected.
VOCs - Volatile Organic Compounds.
PCBs - Polychlorinated Biphenyls.
UCL - Upper Concentration Limit.
(1) - MassDEP Method 1 standards for C9-C10 aromatics used.
(2) - MassDEP Method 1 standards for 1,3-Dichloropropene used.
* - Sample depth for Other/VOC analysis; otherwise the sample depth applies to all listed analyses.

FIGURES

FIGURE 1

SITE AERIAL PHOTOGRAPH
New Bedford High School
NEW BEDFORD, MASSACHUSETTS

R:\Projects\GIS_2007\54634_NBedford\FIG1_NEWBEDHISCH_REV031710.mxd

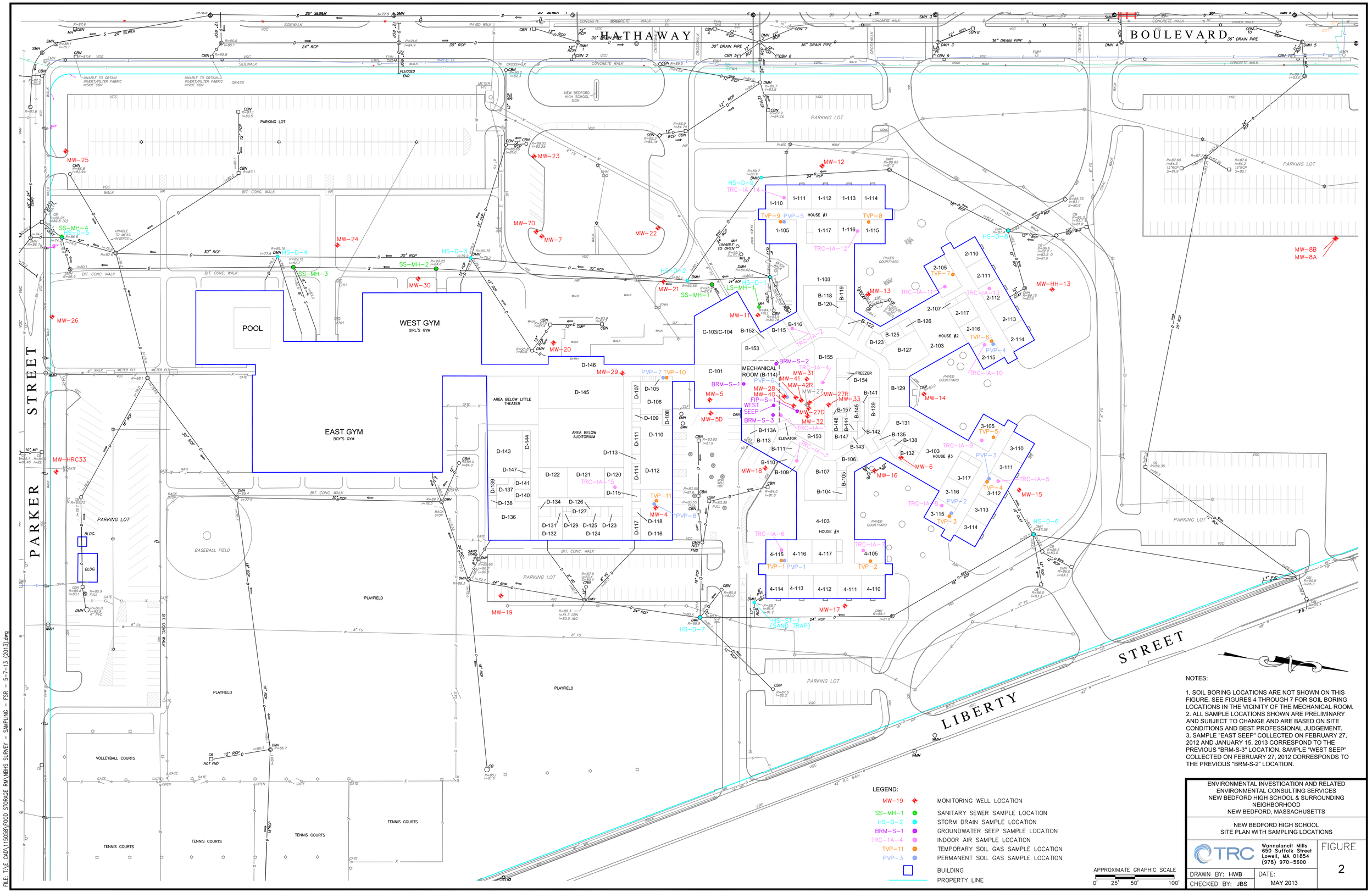

NOTES:

1. SOIL BORING LOCATIONS ARE NOT SHOWN ON THIS FIGURE. SEE FIGURES 4 THROUGH 7 FOR SOIL BORING LOCATIONS IN THE VICINITY OF THE MECHANICAL ROOM.
2. ALL SAMPLE LOCATIONS SHOWN ARE PRELIMINARY AND SUBJECT TO CHANGE AND ARE BASED ON SITE CONDITIONS AND BEST PROFESSIONAL JUDGEMENT.
3. SAMPLE "EAST SEEP" COLLECTED ON FEBRUARY 27, 2012 AND JANUARY 15, 2013 CORRESPOND TO THE PREVIOUS "BRM-S-3" LOCATION. SAMPLE "WEST SEEP" COLLECTED ON FEBRUARY 27, 2012 CORRESPONDS TO THE PREVIOUS "BRM-S-2" LOCATION.

LEGEND:

MW-19	MONITORING WELL LOCATION
SS-MH-1	SANITARY SEWER SAMPLE LOCATION
HS-D-2	STORM DRAIN SAMPLE LOCATION
BRM-S-1	GROUNDWATER SEEP SAMPLE LOCATION
TRC-IA-4	INDOOR AIR SAMPLE LOCATION
TVP-11	TEMPORARY SOIL GAS SAMPLE LOCATION
PVP-3	PERMANENT SOIL GAS SAMPLE LOCATION
	BUILDING
	PROPERTY LINE

APPROXIMATE GRAPHIC SCALE
0' 25' 50' 100'

ENVIRONMENTAL INVESTIGATION AND RELATED ENVIRONMENTAL CONSULTING SERVICES
NEW BEDFORD HIGH SCHOOL & SURROUNDING NEIGHBORHOOD
NEW BEDFORD, MASSACHUSETTS

NEW BEDFORD HIGH SCHOOL
SITE PLAN WITH SAMPLING LOCATIONS

TRC
Wannalancit Mills
650 Suffolk Street
Lowell, MA 01854
(978) 970-5600

FIGURE 2

DRAWN BY: HWB
DATE: MAY 2013
CHECKED BY: JBS

FILE: T:\E_CAD\115058\FOOD STORAGE RM\NBHS SURVEY - SAMPLING - FSR - 5-7-13 (2013).dwg

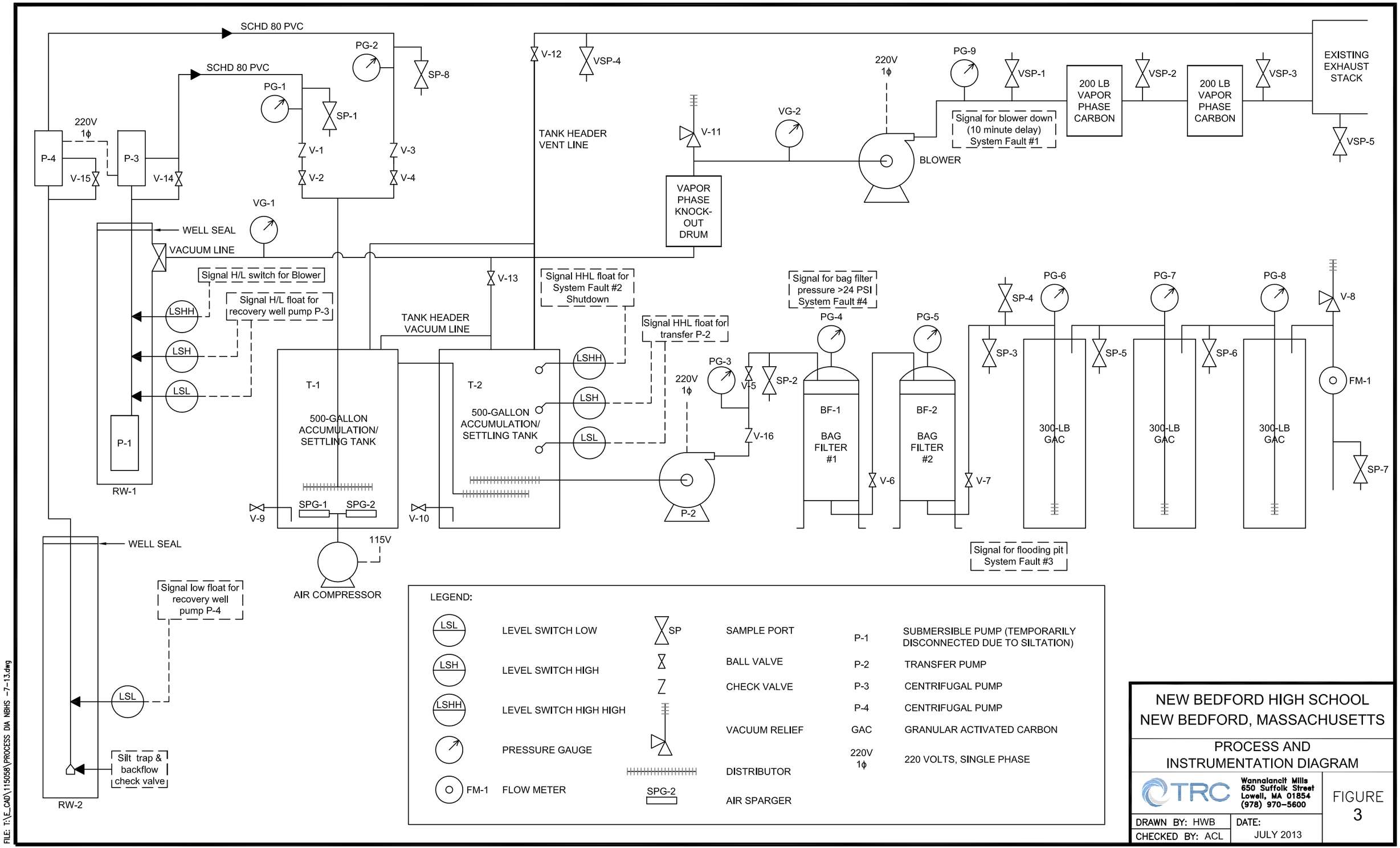

NEW BEDFORD HIGH SCHOOL
NEW BEDFORD, MASSACHUSETTS

PROCESS AND INSTRUMENTATION DIAGRAM

TRC
Wannalancit Mills
650 Suffolk Street
Lowell, MA 01854
(978) 970-5600

FIGURE 3

DRAWN BY: HWB
CHECKED BY: ACL
DATE: JULY 2013

FILE: T:\E_CAD\115058\PROCESS DIA NBHS -7-13.dwg

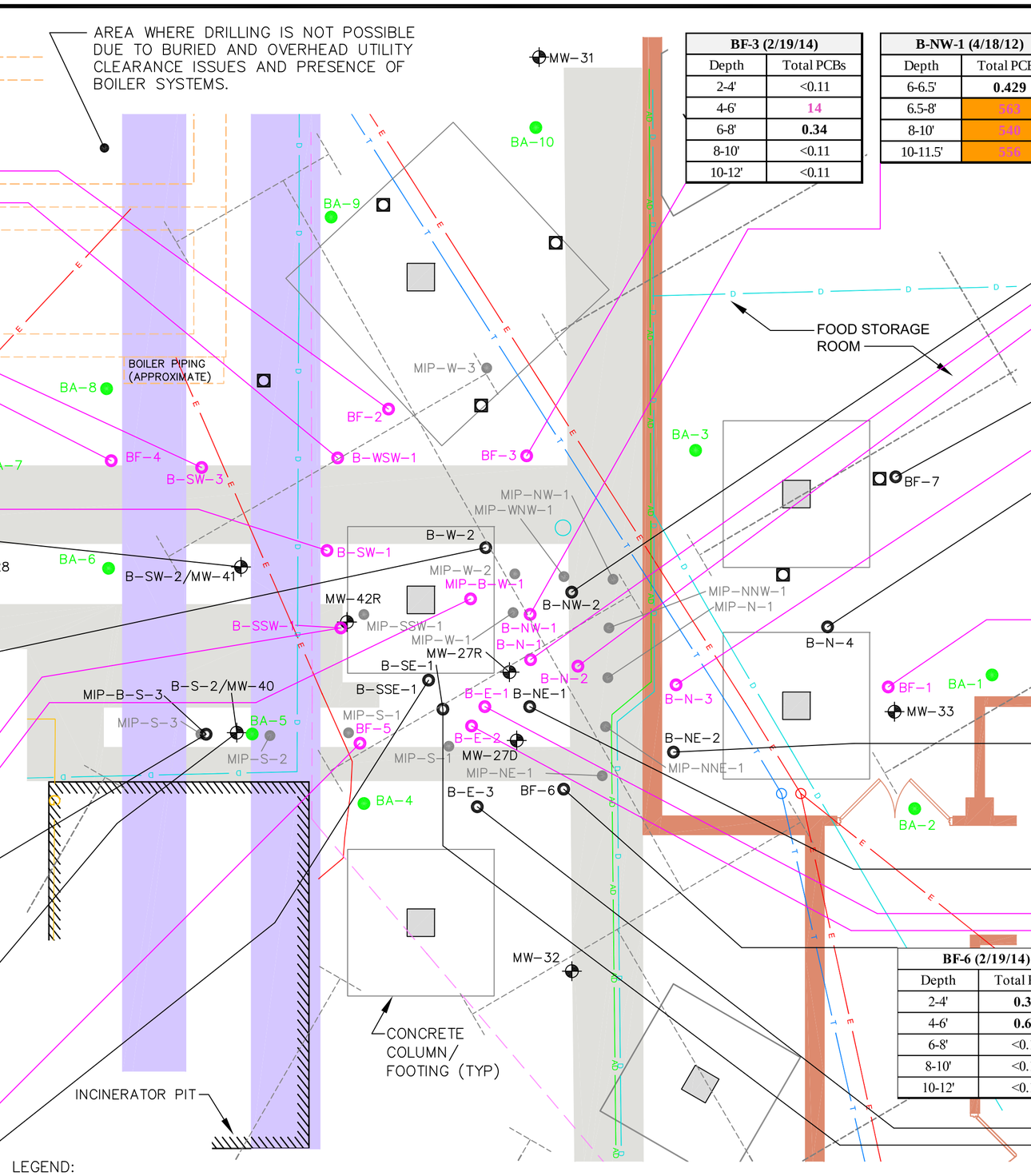

B-WSW-1 (8/22/12)	
Depth	Total PCBs
4-6'	1.13
6-8'	<0.0351
8-10'	**0.0978**
10-12'	**0.0578**

BF-2 (2/18/14)	
Depth	Total PCBs
2-4'	**0.11**
4-6'	<0.10
6-8'	1,240
8-10'	440
10-12'	129

BF-3 (2/19/14)	
Depth	Total PCBs
2-4'	<0.11
4-6'	14
6-8'	**0.34**
8-10'	<0.11
10-12'	<0.11

B-NW-1 (4/18/12)	
Depth	Total PCBs
6-6.5'	**0.429**
6.5-8'	563
8-10'	540
10-11.5'	556

B-NW-2 (6/26/12)	
Depth	Total PCBs
7'	**0.368**

BF-4 (2/19/14)	
Depth	Total PCBs
2-4'	<0.11
4-6'	18
6-8'	13
8-10'	16
10-12'	**0.30**

B-SW-3 (8/22/12)	
Depth	Total PCBs
4-6'	**0.89**
6-8'	4.99
8-10'	**0.041**
10-12'	**0.0511**

B-N-1 (4/18/12)	
Depth	Total PCBs
6-8'	692
8-10'	58.7

B-N-2 (6/26/12)	
Depth	Total PCBs
3-4'	1.06
4-6'	5.51
6-8'	7.41

BF-7 (2/19/14)	
Depth	Total PCBs
2-4'	<0.11
4-6'	<0.11
6-8'	<0.12
8-10'	<0.12
10-12'	<0.11

B-SW-1 (6/26/12)	
Depth	Total PCBs
6-8'	1,090
8-10'	503
10-11'	142
11-12'	11

B-SW-2/MW-41 (6/26/12)	
Depth	Total PCBs
6-8'	<0.039
8-10'	**0.177**
10-12'	<0.0365

B-N-4 (8/22/12)	
Depth	Total PCBs
4-6'	**0.0699**
6-8'	<0.0376
8-10'	<0.0391
10-12'	<0.039

B-N-3 (8/17&22/12)	
Depth	Total PCBs
3-4'	**0.531**
4-6'	<0.0344
6-8'	<0.0367
8-10'	104
10-11.5'	70.4
11.5-12'	3.11

B-W-2 (6/26/12)	
Depth	Total PCBs
6-8'	<0.0387
8-10'	**0.129**
10-12'	**0.0368**

BF-1 (2/18/14)	
Depth	Total PCBs
2-4'	<0.11
4-6'	8.5
6-8'	<0.12

B-SSW-1 (6/26/12)	
Depth	Total PCBs
6-8'	37
8-10'	1.88
10-11.5'	175
11.5-12'	5.03

B-NE-1 (4/18/12)	
Depth	Total PCBs
6-8'	**0.215**
8-10'	**0.0402**
10-12'	**0.046**

B-NE-2 (8/17/12)	
Depth	Total PCBs
3-4'	**0.287**
4-6'	**0.0429**
6-8'	<0.0347
8-10'	<0.0381
10-12'	<0.0399

MIP-B-W-1 (4/20/12)	
Depth	Total PCBs
6-8'	319
10-12'	77.1

BE-1 (4/18/12)	
Depth	Total PCBs
6-8'	2.98
10-12'	29.5

B-E-2 (6/26/12)	
Depth	Total PCBs
6-8'	<0.0378
8-10'	**0.0502**
10-11.5'	17.4
11.5-12'	123

BF-6 (2/19/14)	
Depth	Total PCBs
2-4'	**0.32**
4-6'	**0.66**
6-8'	<0.11
8-10'	<0.11
10-12'	<0.12

MIP-B-S-3 (4/20/12)	
Depth	Total PCBs
6-8'	**0.0594**
8-10'	**0.0785**
10-12'	<0.0358

B-S-2/MW-40 (6/26/12)	
Depth	Total PCBs
6-8'	<0.0377
8-10'	<0.0366
10-12'	<0.038

B-E-3 (6/26/12)	
Depth	Total PCBs
6-8'	<0.0359
8-10'	<0.038
10-12'	<0.0376

BF-5 (2/19/14)	
Depth	Total PCBs
2-4'	1.8
4-6'	**0.74**
6-8'	<0.11
8-10'	<0.11
10-12'	<0.11

B-SSE-1 (4/18/12)	
Depth	Total PCBs
6-8'	<0.0379
8-10'	**0.0905**

B-SE-1 (4/18/12)	
Depth	Total PCBs
6-8'	**0.273**
8-10'	**0.39**

LEGEND:

- AD — ACID DRAIN LINE
- D — DRAIN LINE
- E — ELECTRICAL LINE
- T — TELEPHONE LINE
- G — GAS LINE
- UNKNOWN UTILITY TRENCH VIA DOWSE
- UNDERDRAIN
- INTERIOR WALL
- COLUMN
- OVERHEAD AIR DUCTS
- OVERHEAD PIPE RUNS
- BOILER TANKS (APPROXIMATE LOCATION)
- GROUNDWATER MONITORING WELL
- SOIL BORING
- SOIL BORING WITH EXCEEDANCE
- SOIL BORING APRIL 2014
- ATTEMPTED SOIL BORING LOCATION ABANDONED DUE TO REFUSAL OR UTILITY OBSTRUCTION

APPROXIMATE GRAPHIC SCALE
0' 5' 10'

B-E-2 (6/26/12)	
Depth	Total PCBs
6-8'	<0.0378
8-10'	**0.0502**
10-11.5'	17.4
11.5-12'	123

SOIL BORING IDENTIFICATION (SAMPLE DATE)
SOIL SAMPLE DEPTH (FEET)/TOTAL POLYCHLORINATED BIPHENYL (PCB) CONCENTRATION (MILLIGRAMS PER KILOGRAM [MG/KG])
< INDICATES NO PCB CONCENTRATIONS DETECTED ABOVE SPECIFIED QUANTITATION LIMIT
BOLD = PCB CONCENTRATION DETECTED
BOLD AND MAGENTA = PCB CONCENTRATION DETECTED ABOVE 1 MG/KG TSCA/MCP S-1 STANDARD
BOLD, MAGENTA AND SHADED = PCB CONCENTRATION DETECTED ABOVE 100 MG/KG MCP UPPER CONCENTRATION LIMIT

NOTES:

1. DRAWING REFERENCES "BLOCK B&C FIRST LEVEL PLAN" FROM OWEN F. HACKETT, JR. ASSOCIATES, OF NEW BEDFORD, MA DATED 10-15-69 AND "BLOCK B FIRST LEVEL PLAN" FROM JOSEPH P. CUDDIGAN OF EAST PROVIDENCE, RI DATED 7-12-72.
2. ALL UTILITY LOCATIONS ARE APPROXIMATE.

NEW BEDFORD HIGH SCHOOL
NEW BEDFORD, MASSACHUSETTS

MECHANICAL ROOM
SOIL PCB RESULTS SUMMARY MAP

TRC
Wannalancit Mills
650 Suffolk Street
Lowell, MA 01854
(978) 970-5600

DRAWN BY: HWB
CHECKED BY: MAO
DATE: 5-12-14

FIGURE 4

THIS DRAWING REFERENCES BUT IS NOT LINKED TO T:\E_CAD\115058\FOOD STORAGE RM\PCB DATA BOXES 2-2014.xlsx

FILE: T:\E_CAD\115058\FOOD STORAGE RM\NBHS MECH RM SOIL PCB RESULTS 2014-05-12.dwg

APPENDIX A

HYDRAULIC CONTROL SYSTEM OPERATION, MAINTENANCE & MONITORING LOGS

Date: 11/15/13
Initials: KJ + SB

Treatment System Operation & Maintenance

New Bedford High School - Release Tracking Number 4-22409
230 Hathaway Boulevard, New Bedford, Massachusetts

					11/15/2013		Time
System Run Time	14368.21	(hours)		Flow Meter	1057990	(Gal.)	8:45:00 AM
	Startup since 3/19/12 @ 15:00			(FM - 1)	702175	Gal. since system startup	
					0.81	~average GPM rate treated	
Discharge Pressure	10	(in. of water)		Temperature	80	(°F) Ambient Air	
(PG - 9)				(T - 1)	90	(°F) Vapor	

	AQUEOUS	Valve Position (% open)	Pressure PSI
Influent Line	PG-1	20%	4
Influent Line	PG-2	20%	3
Pre bag filter	PG-3	25%	40
Bag Filter 1	PG-4	100%	9
Bag Filter 2	PG-5	100%	0
Clay bed	PG-6		7.5
GAC Bed 1	PG-7		3
GAC Bed 2	PG-8		10
Influent Valve	V-2	~20%	N/A
Effluent Valve	V-5	~20%	N/A
Effluent totalizer	FM-1	1057990	@ 08:45
		Turbidity NTU	Headspace PPMv
Influent Tank 1	Combined	17.8	11.6
Pre-bag filter	SP-2	40.1	12.8
Post bag filter	SP-3	99.2	13.3
Pre Clay bed	SP-4	28.2	28.3
Pre GAC Bed 1	SP-5	0.99	13.2
Pre GAC Bed 2	SP-6	0.65	25.6
Effluent	SP-7	0	5.4
Effluent Pumping Rate	Timed FM-1		GPM

Date	11/15/2013	Technician: K. Jordan/S. Brown

	VAPOR/AIR	Vac. or Pressure (" of water)	Vapor Concentration (ppm v)
VS-1 Inlet	VSP-1	-	NR
-Intra GAC beds	VSP-2	-	NR
VS-2 Outlet	VSP-3	-	NR
-Tank header	VSP-4	NR	NR
Stack base	VSP-5	NR	NR
Inlet VAC	VG-1	7	
Blower VAC	VG-2	20	
Outlet Discharge Pressure	PG-9	10	

11/15/2013	**Aq. Samp 1**
Aq. Samp 2	
Aq. Samp 3	

INFLUENT - aqueous

Well ID	Headspace	Turbidity
MW-27R	10	94
MW-42R	7	167

Check Air Filter:	NO	Condition:	Ok - no filter element
Check Holding Tanks:	Yes	Condition:	Tank 1 - slight odor tank sparge system OK Tank 2 - slight odor
Check Fault Controls:	Yes	Condition:	OK

785 gal. treated during ramp up + op.=		702960
Startup @ 355815	702175	Gal. treated
Effluent Totalizer :	1057990	8:45:00 AM
Aqueous Samples	11/15/2013	@ Time
Samp 1: 11:27 (Tank 1)	VOCs, PCBs, T	Influent
Samp 2: 11:40 (SP-6)	PCBs	Intra Carbon
Samp 3: 11:50 (SP-7)	VOCs & PCBs	Effluent

Vapor Samples 11/15/13 Inlet & Outlet

Samp 1: 09:02-09:14/09:45 4 hr. TO-15 & PCBs by TO-10A
Samp 2: 09:21-09:33/09:48 4 hr. VOCs & PCBs

Notes: Vapor temps 90F IN/90F OUT

PCB puff media 4 hr @ 5L/min
VOCs 2.7L SUMMAs 200 ml/min

Date	Well	DTW (pvc/gs)	~TD	Vac.	Headspace
	MW-27R		~12'	NR	NR
	MW-42R		~12'	NR	NR
11/15/2013	MW-27D	4.07 / NR	~17'	0.012	0
	MW-33		~9'	NR	NR
11/15/2013	MW-32	4.05 / NR	~9' (8.37')	0.011	0.8
	MW-28		~12' (16.84')	NR	NR
	PVP-6	N/A	N/A	NR	N/A
11/15/2013	MW-40	4.03 / NR	~11.5'	0.032	0.1
	MW-41		~11.25'	NR	NR
11/15/2013	MW-31	4.07 / NR	9.06'	0.014	0.1

Time	Temp.	Sp. Cond	DO	pH	ORP
12:25	24.79	502	6.57	7.78	-5
12:27	25.41	326	2.12	7.74	-15.4
12:33	25.77	325	1.48	7.66	-4.2

INF\Tank 1
SP-6
SP-7

GTS ENVIRONMENTAL TECHNOLOGY, INC.

9 Cheney Drive, Hudson, New Hampshire 03051 Telephone (603) 881-5378

December 30, 2013
To : Alfred Leonard
From : John Patinskas JP

Re : Site Inspection on 12/17/13
Wastewater Treatment System
New Bedford High School site
230 Hathaway Boulevard
New Bedford, Massachusetts

The purpose of this memo is to document inspection of the subject facility by a Certified Wastewater Treatment Facilities Operator as required by 310 CMR 40.0041(9). On December 17, 2013 the wastewater treatment system on a property located at 230 Hathaway Boulevard in New Bedford, Massachusetts was inspected by John P. Patinskas, Grade 2 Wastewater Facilities Operator (certification number 12286).

The groundwater recovery and treatment system was installed between January 27, 2012 and March 15, 2012. Continuous system operation began on 3/19/12. The original system included a recovery well installed through the floor of the school's mechanical equipment room. The groundwater recovery and treatment system was expanded to include a second recovery well on August 20, 2012. Groundwater pumped from the two wells accumulates in a series of two 500-gallon equalization tanks. Two tanks were provided to ensure maximum settling of solids and separation of any LNAPL and DNAPL recovered. Effluent from the accumulation tanks is pumped through a series of two No. 2 size bag filters. The lead filter has a 5-micron bag while the lag filter has a 1-micron bag. In the original system, effluent from the bag filters discharged to a 350-lb organoclay vessel followed by a series of two 300-lb activated carbon vessels. On June 19, 2013, the organoclay in the primary vessel was replaced with 300 pounds of activated carbon (currently three 300-lb activated carbon vessels in series). Treated effluent from the carbon vessels flows through a flow totalizer followed by discharge to the municipal treatment system. Groundwater recovery and treatment fault controls include high accumulation tank water level, high bag filter pressure and water detection on floor. An autodialer notifies system operators in the event of an alarm condition.

Premature bag filter fouling was observed in January 2013. Observed fouling appeared to be due to iron precipitation and bacterial growth. On January 3, 2013 an aeration system was installed in the primary equalization tank. The purpose of aeration is to 1) precipitate iron and 2) agglomerate suspended bacteria to promote rapid settling. Aeration resulted in improved particulate formation and settling in the second tank and allowed bag filters to operate for one or more months between filter changes.

A vacuum extraction system recovers soil vapor from the recovery well. Vapor recovery is facilitated using a Rotron Model EN454, 1.5-HP blower. The blower discharges soil gas to a

series of two 150-lb vapor-phase activated carbon vessels followed by discharge to the atmosphere through an existing exhaust stack.

Pre-mature bag filter clogging occurred during the June through September 2013 monitoring period, requiring frequent filter change-out as often as once per week. Conditions improved during this inspection period with filter bags lasting a month or more between change-outs.

On December 12, 2013, the system shut down on a high water level alarm in the second accumulation tank. The alarm resulted from a failed transfer pump located between the tank and the bag filters. The pump was replaced on 12/16/13 and the system was restarted.

Both recovery well pumps are actuated by in-well float switches. During this monitoring period, problems including pumps failing to turn off and pumps failing to turn on have been reported. Observed well pump problems have been traced to floats stuck in the up or down position. Cleaning of solid material accumulating on floats was somewhat effective but did not always work for extended periods. Both floats were replaced on 12/17/13 just prior to the GTS inspection in an effort to reduce float switch malfunction. Pumps were cycling on and off properly as of 12/17/13.

The system was operating at the time of the December 17 GTS site visit. The flow totalizer read 1,083,810 gallons on December 17, indicating 77,945 gallons treated since the most recent GTS inspection on September 16, 2013. The average flow rate between 9/16/13 and 12/17/13 was calculated to be 0.59 GPM. The flow is significantly lower than the 1.19 GPM reported in the quarter ending September 2013. The reduced flow rate is consistent with observed lower water table conditions.

Water samples were obtained at various treatment locations and screened for volatile organic compounds (VOCs) by photo-ionization detector (PID). VOCs were measured at 3.2 ppm at the raw water influent and 3.1 ppm at the treated effluent. Influent and effluent VOC concentrations are significantly lower than readings obtained in September 2013. Laboratory samples were obtained for analysis of VOCs and PCBs.

Should you have any questions regarding any aspect of this inspection report, please do not hesitate to call. The next operation and maintenance visit will be scheduled in December 2013.

Date: 12/17/13
Initials: JP

Treatment System Operation & Maintenance

New Bedford High School - Release Tracking Number 4-22409
230 Hathaway Boulevard, New Bedford, Massachusetts

System Run Time: 15,038.0 (hours)
Startup since 3/19/12 @ 15:00

Date: 12/17/2013 Time: 9:35:00 AM
Technician: J. Patinskas

Discharge Pressure (PG - 9): 10 (in. of water)

Flow Meter (FM-1): 1,083,810
728,780 Gal. since startup
0.81 ~average GPM

Temperature (T-1): 69 (°F) Ambient Air
N/A (°F) Vapor

	AQUEOUS	Valve Position (% open)	Pressure PSI	
Influent Line	PG-1	10%	43	
Influent Line	PG-2	20%	34	
Pre bag filter	PG-3	30%	33	
Bag Filter 1	PG-4	100%	11	
Bag Filter 2	PG-5	100%	10.5	
GAC Bed 1	PG-6		9.5	
GAC Bed 2	PG-7		6	
GAC Bed 3	PG-8		3.5	
Influent Valve	V-2	N/A	N/A	
Effluent Valve	V-5	N/A	N/A	
Effluent totalizer	FM-1	1,083,810	@ 09:35	
		Turbidity NTU	Headspace PPMv	
Influent Tank 1	Combined	79.8	3.2	**Aq. Samp 1**
Pre-bag filter	SP-2	93.4	1.4	
Post bag filter	SP-3	34	0.8	
Pre Clay bed	SP-4	38.2	1	
Pre GAC Bed 1	SP-5	3.91	0.5	
Pre GAC Bed 2	SP-6	0.83	2.9	
Effluent	SP-7	0.17	3.1	**Aq. Samp 2**
Effluent Pumping Rate	Timed FM-1	0.60	GPM	

	VAPOR/AIR	Vac. or Pressure (" of water)	Vapor Concentration (ppm v)
VS-1 Inlet	VSP-1	-	NR
Intra GAC beds	VSP-2	-	NR
VS-2 Outlet	VSP-3	-	NR
Tank header	VSP-4	NR	NR
Stack base	VSP-5	NR	NR
Inlet VAC	VG-1	7	
Blower VAC	VG-2	20	
Discharge Pressure	PG-9	10	

INFLUENT - aqueous

Well ID	Headspace	Turbidity
MW-27R	4.2	169
MW-42R	1.6	180

Check Air Filter: No Condition: Ok - no filter element
Check Holding Tanks: Yes Condition: Tank 1 - slight odor tank sparge system OK
Tank 2 - slight odor
Check Fault Controls: Yes Condition: OK

Gallons during ramp up	785
Initial Totalizer reading	355,815
Current Totalizer Reading	1,083,810
Gallons treated to date	728,780

Aqueous Samples	12/17/2013 to 12/18/2013	
Samp 1 12/17 at 9:49	VOCs,PCBs,TPH	Influent (Tank 1)
Samp 2 12/17 at 9:58	VOCs & PCBs	Effluent (SP-7)
Samp 3 12/18/1023	VOCs, O&G, Ph	Effluent (SP-7)
Samp 4 24 hr field composite	PCB, BOD, TSS	Effluent (SP-7)
Samp 5 24 hr lab composite	VOCs	Effluent (SP-7)

Vapor Samples 12/17/13	
Samp 1 - Inlet	PCBs by TO-10A
Samp 2 - Outlet	PCBs by TO-10A
Sample 3 - Inlet	VOCs by TO-15
Sample 4 - Outlet	VOCs by TO-15

PCB puff media 6 hr @ 5L/min
VOCs 2.7L SUMMAs 200 ml/min

Date	Well	DTW (pvc/gs)	~TD	Vac.	Headspace
	MW-27R		~12'	NR	NR
	MW-42R		~12'	NR	NR
1/0/1900	MW-27D	2.41	~17'	0.002	0.0
	MW-33		~9'	NR	NR
1/0/1900	MW-32	2.86	~9' (8.37')	0.227	0.0
	MW-28		~12' (16.84')	NR	NR
	PVP-6		N/A	NR	N/A
1/0/1900	MW-40	2.6	~11.5'	0.0	0.0
	MW-41		~11.25'	NR	NR
1/0/1900	MW-31	2.72	9.06'	0.0	0.0

	Time	Temp.	Sp. Cond	DO	pH	ORP
INF\Tank 1	9:49	21.78	423	3.94	6.43	3.4
SP-6	9:54	22.17	360	1.17	7.05	12.1
SP-7	9:58	22.12	366	1.22	7.23	2.6

Date: 1/16/14
Initials: JP

Treatment System Operation & Maintenance

New Bedford High School - Release Tracking Number 4-22409
230 Hathaway Boulevard, New Bedford, Massachusetts

System Run Time	15,756.2 (hours)	Date	1/16/2014	Time	8:48:00 AM
Startup since 3/19/12 @ 15:00				Technician	J. Patinskas

Discharge Pressure (PG - 9)	9.5 (in. of water)	Flow Meter (FM-1)	1,083,810	Gal. since startup
			0.80	~average GPM

	AQUEOUS	Valve Position (% open)	Pressure PSI		
Influent Line	PG-1	40%	2		
Influent Line	PG-2	20%	34		
Pre bag filter	PG-3	25%	22		
Bag Filter 1	PG-4	100%	13.5		
Bag Filter 2	PG-5	100%	13		
GAC Bed 1	PG-6		6		
GAC Bed 2	PG-7		2.5		
GAC Bed 3	PG-8		1		
Influent Valve	V-2	N/A	N/A		
Effluent Valve	V-5	N/A	N/A		
Effluent totalizer	FM-1	1,083,810	@ 09:35		
		Turbidity NTU	Headspace PPMv		
Influent Tank 1	Combined	15	0	Aq. Samp 1	
Pre-bag filter	SP-2	29.2	0		
Post bag filter	SP-3	22.7	0.3		
Pre Clay bed	SP-4	23.8	0		
Pre GAC Bed 1	SP-5	1	0		
Pre GAC Bed 2	SP-6	0	0.1		
Effluent	SP-7	0	0	Aq. Samp 2	
Effluent Pumping Rate	Timed FM-1		GPM		

Temperature (T-1)	80	(°F) Ambient Air
	94.8	(°F) Vapor

	VAPOR/AIR	Vac. or Pressure (" of water)	Vapor Concentration (ppm v)
VS-1 Inlet	VSP-1	-	NR
Intra GAC beds	VSP-2	-	NR
VS-2 Outlet	VSP-3	-	NR
Tank header	VSP-4	NR	NR
Stack base	VSP-5	NR	NR
Inlet VAC	VG-1	6.75	
Blower VAC	VG-2	20	
Discharge Pressure	PG-9	9.5	

INFLUENT - aqueous

Well ID	Headspace	Turbidity
MW-27R	0	58.9
MW-42R	0	33.2

Check Air Filter:	No	Condition:	Ok - no filter element
Check Holding Tanks:	Yes	Condition:	Tank 1 - slight odor tank sparge system OK Tank 2 - slight odor
Check Fault Controls:	Yes	Condition:	OK

Gallons during ramp up
Initial Totalizer reading
Current Totalizer Reading
Gallons treated to date

Aqueous Samples		1/16/2014
Samp 1 1/16 at 12:30	VOCs,PCBs,TPH	Influent (Tank 1)
Samp 2 1/16 at 12:50	VOCs & PCBs	Effluent (SP-7)

Vapor Samples 12/17/13	
Samp 1 - Inlet	PCBs by TO-10A
Samp 2 - Outlet	PCBs by TO-10A
Sample 3 - Inlet	VOCs by TO-15
Sample 4 - Outlet	VOCs by TO-15

PCB puff media 6 hr @ 5L/min
VOCs 2.7L SUMMAs 200 ml/min

Date	Well	DTW (pvc/gs)	~TD	Vac.	Headspace
	MW-27R		~12'	NR	NR
	MW-42R		~12'	NR	NR
1/16/2014	MW-27D	1.49	~17'	0.007	0.0
	MW-33		~9'	NR	NR
1/16/2014	MW-32	1.82	~9' (8.37')	0.003	0.0
	MW-28		~12' (16.84')	NR	NR
	PVP-6		N/A	NR	N/A
1/16/2014	MW-40	1.63	~11.5'	0.0	0.0
	MW-41		~11.25'	0.002	NR
1/16/2014	MW-31	1.7	9.06'	0.0	0.0

	Time	Temp. C	Sp. Cond	DO	pH	ORP
INF\Tank 1	11:47	21.76	370	7.84	6.96	-9
SP-6	11:53	23.34	340	2.61	7.1	-11.6
SP-7	12:00	23.53	340	1.67	7.01	2.3

Date: 2/14/14
Initials: KJ

Treatment System Operation & Maintenance

New Bedford High School - Release Tracking Number 4-22409

230 Hathaway Boulevard, New Bedford, Massachusetts

System Run Time: 16,458.0 (hours)
Startup since 3/19/12 @ 15:00

Date: 2/14/2014 Time: 2:30:00 PM
Technician: K. Jordan

Discharge Pressure (PG - 9): 10 (in. of water)

Flow Meter (FM-1): 1,146,920 Gal.
791,890 Gal.treated since startup
0.80 ~average GPM

	AQUEOUS	Valve Position (% open)	Pressure PSI
Influent Line	PG-1	40%	
Influent Line	PG-2	20%	
Pre bag filter	PG-3	25%	24
Bag Filter 1	PG-4	100%	10
Bag Filter 2	PG-5	100%	10.5
GAC Bed 1	PG-6		8
GAC Bed 2	PG-7		5
GAC Bed 3	PG-8		3
Influent Valves	V-2 / V-4		N/A
Effluent Valve	V-5		N/A
Effluent totalizer	FM-1	1,146,920	@ 8:00
		Turbidity NTU	Headspace PPMv
Influent Tank 1	Combined	23.1	0
Pre-bag filter	SP-2	200	0
Post bag filter	SP-3	149	0
Pre Clay bed	SP-4	190	0
Pre GAC Bed 1	SP-5	1.88	0
Pre GAC Bed 2	SP-6	1.18	0.7
Effluent	SP-7	0.72	1.7
Effluent Pumping Rate	Timed FM-1	0.53	gpm

Bag Filter c/o

Aq. Samp 1

Aq. Samp 2

Aq. Samp 3

Temperature (T-1)	76 (°F) Ambient Air
	97 (°F) Vapor Inlet
	94 (°F) Vapor Outlet

	VAPOR/AIR	Vac. or Pressure (" of water)	Vapor Concentration (ppm v)
VS-1 Inlet	VSP-1	-	0
Intra GAC beds	VSP-2	-	0
VS-2 Outlet	VSP-3	-	0
Tank header	VSP-4	NR	0
Stack base	VSP-5	NR	0
Inlet VAC	VG-1	6.5"	
Blower VAC	VG-2	20"	
Discharge Pressure	PG-9	10"	

INFLUENT - aqueous

Well ID	Headspace	Turbidity
MW-27R	0.3	65
MW-42R	0.1	33.6

Check Air Filter:	No	Condition:	Ok - no filter element
Check Holding Tanks:	Yes	Condition:	Tank 1 - slight odor tank sparge system OK Tank 2 - slight odor
Check Fault Controls:	Yes	Condition:	OK

Gallons during ramp up	785
Initial Totalizer reading	355,815
Current Totalizer Reading	1,146,920
Gallons treated to date	**791,890**

Aqueous Samples	**2/14/2014**	
Sample 1 2/14 at 8:00	VOCs,PCBs *	Influent (Tank 1)
Sample 2 2/14 at 8:10	VOCs, PCBs	Effluent (SP-7)

Vapor Samples	**2/14/2014**
Samp 1 - Inlet 10:48-14:48	PCBs by TO-10A
Samp 2 - Outlet 10:52-14:52	PCBs by TO-10A
Sample 3 - Inlet 14:49 - 15:01	VOCs by TO-15
Sample 4-Outlet 14:57-15:08	VOCs by TO-15

PCB puff media 10 hr @ 5L/min
VOCs 2.7L SUMMAs 200 ml/min

Date	Well	DTW (pvc/gs)	~TD	Vac.	Headspace
2/14/2014	MW-27R	2.00	~12'		
2/14/2014	MW-42R	2.00	~10'		
2/14/2014	MW-27D	1.47	~17'	0.000	0.00
	MW-33		~9'		
2/14/2014	MW-32	1.81	~9' (8.37')	0.003	0.00
	MW-28		~12' (16.84')		
	PVP-6		N/A		
2/14/2014	MW-40	1.62	~11.5'	0.004	0.0
	MW-41		~11.25'		
2/14/2014	MW-31	1.7	9.06'	0.003	0.0

	Time	Temp. C	Sp. Cond	DO	pH	ORP
INF\Tank 1	13:12	22.88	360	6.82	6.63	-1.2
SP-6	13:14	23.84	341	1.35	6.71	4
SP-7	13:16	23.87	364	1.69	6.99	-6.7

GTS ENVIRONMENTAL TECHNOLOGY, INC.

9 Cheney Drive, Hudson, New Hampshire 03051 Telephone (603) 881-5378

March 27, 2014
To : Alfred Leonard
From : John Patinskas JP

Re : Site Inspection on 3/18/14
Wastewater Treatment System
New Bedford High School site
230 Hathaway Boulevard
New Bedford, Massachusetts

The purpose of this memo is to document inspection of the subject facility by a Certified Wastewater Treatment Facilities Operator as required by 310 CMR 40.0041(9). On March 18, 2014, the wastewater treatment system on a property located at 230 Hathaway Boulevard in New Bedford, Massachusetts was inspected by John P. Patinskas, Grade 2 Wastewater Facilities Operator (certification number 12286).

The groundwater recovery and treatment system was installed between January 27, 2012 and March 15, 2012. Continuous system operation began on 3/19/12. The original system included a recovery well installed through the floor of the school's mechanical equipment room. The groundwater recovery and treatment system was expanded to include a second recovery well on August 20, 2012. Groundwater pumped from the two wells accumulates in a series of two 500-gallon equalization tanks. Two tanks were provided to ensure maximum settling of solids and separation of any LNAPL and DNAPL recovered. Effluent from the accumulation tanks is pumped through a series of two No. 2 size bag filters. The lead filter has a 5-micron bag while the lag filter has a 1-micron bag. In the original system, effluent from the bag filters discharged to a 350-lb organoclay vessel followed by a series of two 300-lb activated carbon vessels. On June 19, 2013, the organoclay in the primary vessel was replaced with 300 pounds of activated carbon (currently three 300-lb activated carbon vessels in series). Treated effluent from the carbon vessels flows through a flow totalizer followed by discharge to the municipal treatment system. Groundwater recovery and treatment fault controls include high accumulation tank water level, high bag filter pressure and water detection on floor. An autodialer notifies system operators in the event of an alarm condition.

Premature bag filter fouling was observed in January 2013. Observed fouling appeared to be due to iron precipitation and bacterial growth. On January 3, 2013 an aeration system was installed in the primary equalization tank. The purpose of aeration is to 1) precipitate iron and 2) agglomerate suspended bacteria to promote rapid settling. Aeration resulted in improved particulate formation and settling in the second tank and allowed bag filters to operate for one month or longer between filter changes.

A vacuum extraction system recovers soil vapor from the original recovery well. Vapor recovery is facilitated using a Rotron Model EN454, 1.5-HP blower. The blower discharges soil

gas to a series of two 150-lb vapor-phase activated carbon vessels followed by discharge to the atmosphere through an existing exhaust stack.

Pre-mature bag filter clogging occurred during the June through September 2013 monitoring period, requiring frequent filter change-out as often as once per week. Conditions improved during the quarterly inspection periods ending on December 17, 2013 and March 18, 2014, presumably due to a falling water table and associated lower groundwater recovery rates. Presently, filter bags last a month or more between change-outs.

Both recovery well pumps are actuated by in-well float switches. The float switches in both wells were replaced on 12/17/13 due to a tendency to stick in the up or down position. On 3/18/14, both float switches were found to be stuck in the up position, resulting in well pumps running continuously. Float switches were removed, cleaned and returned to service on 3/18. The well pumps were observed to cycle correctly following float switch maintenance.

The system was operating at the time of the March 18 GTS site visit. The flow totalizer read 1,192,855 gallons on March 18, indicating 109,045 gallons treated since the most recent GTS inspection on December 17, 2013. The average flow rate between 12/17/13 and 3/18/14 was calculated to be 0.83 GPM. This flow rate compares to an average flow of 0.59 GPM for the quarter ending December 2013.

Water samples were obtained at various treatment locations and screened for volatile organic compounds (VOCs) by photo-ionization detector (PID). VOCs were measured at 1.5 ppm at the raw water influent and 3.8 to 5.0 ppm at the treated effluent. Influent VOC concentrations are significantly lower than readings obtained in December 2013. Laboratory samples were obtained for analysis of VOCs and PCBs.

Should you have any questions regarding any aspect of this inspection report, please do not hesitate to call. The next operation and maintenance visit will be scheduled in June 2014.

Date: 3/18/14
Initials: JP JF

Treatment System Operation & Maintenance

New Bedford High School - Release Tracking Number 4-22409

230 Hathaway Boulevard, New Bedford, Massachusetts

24 hr POTW event starting 3/17/2014 @ 7:30 AM

System Run Time	17,053.5 (hours)	Date	3/18/2014	Time	1:00:00 PM
Startup since 3/19/12 @ 15:00				Technician	J. Patinskas

Discharge Pressure (PG - 9)	10 (in. of water)	Flow Meter (FM-1)	1,192,855	Gal.
			837,825	Gal.treated since startup
			0.82	~average GPM

	AQUEOUS	Valve Position (% open)	Pressure PSI	Bag Filter c/o 3/18/14 9-9:15
Influent Line	PG-1	30%	4-10	
Influent Line	PG-2	20%	1-40	
Pre bag filter	PG-3	40%	24	24.5
Bag Filter 1	PG-4	100%	16	8
Bag Filter 2	PG-5	100%	11	7.5
GAC Bed 1	PG-6		3.5	6.5
GAC Bed 2	PG-7		<0.5	2.5
GAC Bed 3	PG-8		0	0.5-1
Influent Valves	V-2 / V-4	30% / 20%	see above	
Effluent Valve	V-5	40%	see above	
Effluent totalizer	FM-1	1,192,855	@ 13:00	
		Turbidity NTU	Headspace PPMv	
Influent Tank 1	Combined	9.1	1.5	**Aq. Samp 1**
Pre-bag filter	SP-2	14.4	1.2	
Post bag filter	SP-3	6	1.2	
Pre Clay bed	SP-4	6	1.2	
Pre GAC Bed 1	SP-5	0.34	0.2	
Pre GAC Bed 2	SP-6	0.21	6.3	
Effluent	SP-7	0	3.8-5	**Aq. Samp 2**
Effluent Pumping Rate	Timed FM-1		1 gpm	3.25 gpm post bag filter c/o

Temperature (T-1)	78	(°F) Ambient Air
	98	(°F) Vapor Inlet
	93	(°F) Vapor Outlet

	VAPOR/AIR	Vac. or Pressure (" of water)	Vapor Concentration (ppm v)
VS-1 Inlet	VSP-1	-	0
Intra GAC beds	VSP-2	-	0
VS-2 Outlet	VSP-3	-	0
Tank header	VSP-4	-0.1	0
Stack base	VSP-5	-0.05-0.1	0
Inlet VAC	VG-1	7"	
Blower VAC	VG-2	20-21"	
Discharge Pressure	PG-9	10"	

INFLUENT - aqueous

Well ID	Headspace	Turbidity
MW-27R	2.5	12.9
MW-42R	3.8->4.2	2.2

Check Air Filter:	No	Condition:	Ok - no filter element
Check Holding Tanks:	Yes	Condition:	Tank 1 - slight odor tank sparge system OK Tank 2 - V. slight odor
Check Fault Controls:	Yes	Condition:	OK

Note: System down for ~1hr 3/18/2014 10:30-11:30 AM for maintenance of recovery well pump floats

Gallons during ramp up	885
Initial Totalizer reading	355,815
Current Totalizer Reading	1,192,755
Gallons treated to date	**837,825**

Aqueous Samples	**3/17-3/18/2014**	
Samp 1 3/17 at 12:00	VOCs,PCBs *	Influent (Tank 1)
Samp 2 3/17 at 12:15	PCBs	Intracarbon (SP-6)
Samp 3 3/17 at 12:30	PCBs	Effluent (SP-7)
* POTW Effluent (grab)	Oil & Grease / B.O.D. / pH	
POTW Effluent (composite)	VOCs,PCBs & T.S.S.	

Note: Effluent composite 4-6hr aliquots

Vapor Samples 3/17/14	
Samp 1 - Inlet 11:36-21:36	PCBs by TO-10A
Samp 2 - Outlet 11:35-21:35	PCBs by TO-10A
Sample 3 - Inlet 21:39-21:48	VOCs by TO-15
Sample 4 - Outlet 21:41-21:51	VOCs by TO-15

PCB puff media 10 hr @ 5L/min

VOCs 2.7L SUMMAs 200 ml/min

Date	Well	DTW (pvc/gs)	~TD	Vac.	Headspace
3/18/2014	MW-27R	5.8->7.2' gs	~12'	NR	2.5
3/18/2014	MW-42R	8.5->10.3' gs	~12'	NR	4.2
3/18/2014	MW-27D	1.62/1.9	~17'	N/A	0.0
	MW-33		~9'	NR	NR
3/18/2014	MW-32	1.9/2.05	~9' (8.37')	-0.008-0.01	1.2->1.8
3/18/2014	MW-28	1.79/1.94	~12' (16.84')	-0.037	2.5
3/18/2014	PVP-6	N/A	N/A	-0.035-0.04	N/A
3/18/2014	MW-40	1.8/1.99	~11.5'	N/A	0.0
3/18/2014	MW-41	2.08/2.2	~11.25'	-0.6-0.8	2.3->2.8
3/18/2014	MW-31	1.78/1.95	9.06'	-0.002-0	0.0

3/17/2014	Time	Temp. C	Sp. Cond	DO	pH	ORP
INF\Tank 1	12:15	22.7	312	9.48	6.48	90.5
SP-2	12:00	23.56	311	8.88	7.25	184
SP-4	12:30	23.65	313	8.36	7.2	172
SP-6	12:50	23.82	311	0.15	6.79	360
SP-7	13:00	23.93	312	0.15	6.81	378

Date: 4/21/14
Initials: JF

Treatment System Operation & Maintenance

New Bedford High School - Release Tracking Number 4-22409
230 Hathaway Boulevard, New Bedford, Massachusetts

System Run Time	17,866.5 (hours)	Date	4/21/2014	Time	10:00:00 AM
Startup since 3/19/12 @ 15:00				Technician	J. Fiero

Discharge Pressure (PG - 9)	10.5 (in. of water)	Flow Meter (FM-1)	1,272,300	Gal.
			918,351	Gal.treated since startup
			0.82	~average GPM

	AQUEOUS	Valve Position (% open)	Pressure PSI	
Influent Line	PG-1	20%	0-20	
Influent Line	PG-2	20%	0-40	
Pre bag filter	PG-3	40%	25	
Bag Filter 1	PG-4	100%	12	
Bag Filter 2	PG-5	100%	11.5	
GAC Bed 1	PG-6		10.5	
GAC Bed 2	PG-7		6	
GAC Bed 3	PG-8		3	
Influent Valves	V-2 / V-4	20%	see above	
Effluent Valve	V-5	40%	see above	
Effluent totalizer	FM-1	1,273,281	@ 17:00	
		Turbidity NTU	Headspace PPMv	
Influent Tank 1	Combined	2.54	1	**Aq. Samp 1**
Pre-bag filter	SP-2	12.4	0.8	
Post bag filter	SP-3	8	1.2	
Pre Clay bed	SP-4	6	1.2	
Pre GAC Bed 1	SP-5	0.46	0.4	
Pre GAC Bed 2	SP-6	0.14	3.6	
Effluent	SP-7	0.64	2.5	**Aq. Samp 2**
Effluent Pumping Rate	Timed FM-1		5 GPM	

Temperature (T-1)	78	(°F) Ambient Air
	96	(°F) Vapor Inlet
	88	(°F) Vapor Outlet

	VAPOR/AIR	Vac. or Pressure (" of water)	Vapor Concentration (ppm v)
VS-1 Inlet	VSP-1	-	0
Intra GAC beds	VSP-2	-	0
VS-2 Outlet	VSP-3	-	0
Tank header	VSP-4	-0.03	0-0.1
Stack base	VSP-5	-0.04	0
Inlet VAC	VG-1	7"	
Blower VAC	VG-2	20"	
Discharge Pressure	PG-9	10.5"	

INFLUENT - aqueous

Well ID	Headspace	Turbidity
MW-27R	0.3-0.5	23.3
MW-42R	1.5	3.8

Check Air Filter:	No	Condition:	Ok - no filter element
Check Holding Tanks:	Yes	Condition:	Tank 1 - slight odor tank sparge system OK Tank 2 - V. slight odor
Check Fault Controls:	Yes	Condition:	OK

Note: System down for ~2hr 4/23/2014 10:20am-12:20pm for maintenance of recovery well MW-27R
Timed flows @ ~15:00 MW-27R ~0.6-0.8 gpm & MW-42R ~1-1.2 gpm
After repairs on 4/23 treatment rates increased from ~1.6 to 2.2 gpm & drawdown at MW-27R improved

Gallons during ramp up	885
Initial Totalizer reading	355,815
Current Totalizer Reading	1,273,281
Gallons treated to date	**918,351**

Date	Well	DTW (pvc/gs)	~TD	Vac.	Headspace
4/21/2014	MW-27R	2.8-3.2' / 6-7' *	~11'	NR	0.3-0.5
4/21/2014	MW-42R	9-10' gs	~12'	NR	1.5
4/21/2014	MW-27D	1.22 gs	16.25'	N/A	0.0
4/21/2014	MW-33	1.55 gs	8.8'	ND	0
4/21/2014	MW-32	1.76 gs	7.8'	-0.006-0.012	0.1
4/21/2014	MW-28	1.29 gs	11.4'	-0.007	0.5-0.8
4/21/2014	PVP-6	N/A	N/A	-0.007-0.018	N/A
4/21/2014	MW-40	1.33 gs	10.8'	N/A	0.0
4/21/2014	MW-41	1.68 gs	10.75'	-0.02-0.03	0.8-1.2
4/21/2014	MW-31	1.55 gs	8.8'	ND	0.0

* MW-27R after repairs on recovery well DTW on 2/23/14 was 6-7'

Aqueous Samples	**4/21/14**	
Samp 1 4/21 at 12:30	VOCs,PCBs	Influent (Tank 1)
Samp 2 3/17 at 12:45	VOCs, PCBs *	Intracarbon (SP-6)
Samp 3 3/17 at 12:30	VOCs, PCBs	Effluent (SP-7)

* Submitted but not analyzed

Vapor Samples 4/21/14	
Samp 1 - Inlet 12:15-16:15	PCBs by TO-10A
Samp 2 - Outlet 12:30-16:30	PCBs by TO-10A
Sample 3 - Inlet 11:30-11:43	VOCs by TO-15
Sample 4 - Outlet 11:34-11:46	VOCs by TO-15

PCB puff media 4hr @ 5L/min
VOCs 2.7L SUMMAs 220 ml/min

4/21/2014	Time	Temp. C	Sp. Cond	DO	pH	ORP
INF\Tank 1	12:15	21.26	354	5.23	6.61	40
SP-2	12:30	21.77	365	10.2	7.04	57
SP-4	12:40	21.78	365	11.3	7.2	78.5
SP-6	12:50	21.91	357	0.6-0.5	6.93	100
SP-7	13:00	22.07	356	0.25	6.9	110

APPENDIX B

LABORATORY DATA REPORTS

HYDRAULIC CONTROL SYSTEM ANALYTICAL DATA

ANALYTICAL REPORT

Lab Number:	L1323309
Client:	TRC Environmental Consultants Wannalancit Mills 650 Suffolk Street Lowell, MA 01854
ATTN:	David Sullivan
Phone:	(978) 656-3565
Project Name:	NBHS IRA PSWS
Project Number:	115058
Report Date:	12/03/13

The original project report/data package is held by Alpha Analytical. This report/data package is paginated and should be reproduced only in its entirety. Alpha Analytical holds no responsibility for results and/or data that are not consistent with the original.

Certifications & Approvals: MA (M-MA086), NY (11148), CT (PH-0574), NH (2003), NJ NELAP (MA935), RI (LAO00065), ME (MA00086), PA (68-03671), USDA (Permit #P-330-11-00240), NC (666), TX (T104704476), DOD (L2217), US Army Corps of Engineers.

Eight Walkup Drive, Westborough, MA 01581-1019
508-898-9220 (Fax) 508-898-9193 800-624-9220 - www.alphalab.com

Project Name: NBHS IRA PSWS
Project Number: 115058

Lab Number: L1323309
Report Date: 12/03/13

Alpha Sample ID	Client ID	Sample Location	Collection Date/Time
L1323309-01	INFLUENT	NEW BEDFORD, MA	11/15/13 11:27
L1323309-02	INFLUENT (FILTERED)	NEW BEDFORD, MA	11/15/13 11:27
L1323309-03	INTRACARBON	NEW BEDFORD, MA	11/15/13 11:40
L1323309-04	EFFLUENT	NEW BEDFORD, MA	11/15/13 11:50
L1323309-05	TRIP BLANK	NEW BEDFORD, MA	11/15/13 00:00

Project Name: NBHS IRA PSWS **Lab Number:** L1323309

Project Number: 115058 **Report Date:** 12/03/13

MADEP MCP Response Action Analytical Report Certification

This form provides certifications for all samples performed by MCP methods. Please refer to the Sample Results and Container Information sections of this report for specification of MCP methods used for each analysis. The following questions pertain only to MCP Analytical Methods.

An affirmative response to questions A through F is required for "Presumptive Certainty" status		
A	Were all samples received in a condition consistent with those described on the Chain-of-Custody, properly preserved (including temperature) in the field or laboratory, and prepared/analyzed within method holding times?	YES
B	Were the analytical method(s) and all associated QC requirements specified in the selected CAM protocol(s) followed?	YES
C	Were all required corrective actions and analytical response actions specified in the selected CAM protocol(s) implemented for all identified performance standard non-conformances?	YES
D	Does the laboratory report comply with all the reporting requirements specified in CAM VII A, "Quality Assurance and Quality Control Guidelines for the Acquisition and Reporting of Analytical Data?"	YES
E a.	VPH, EPH, and APH Methods only: Was each method conducted without significant modification(s)? (Refer to the individual method(s) for a list of significant modifications).	N/A
E b.	APH and TO-15 Methods only: Was the complete analyte list reported for each method?	N/A
F	Were all applicable CAM protocol QC and performance standard non-conformances identified and evaluated in a laboratory narrative (including all "No" responses to Questions A through E)?	YES

A response to questions G, H and I is required for "Presumptive Certainty" status		
G	Were the reporting limits at or below all CAM reporting limits specified in the selected CAM protocol(s)?	NO
H	Were all QC performance standards specified in the CAM protocol(s) achieved?	NO
I	Were results reported for the complete analyte list specified in the selected CAM protocol(s)?	YES

For any questions answered "No", please refer to the case narrative section on the following page(s).

Please note that sample matrix information is located in the Sample Results section of this report.

Project Name: NBHS IRA PSWS **Lab Number:** L1323309
Project Number: 115058 **Report Date:** 12/03/13

Case Narrative

The samples were received in accordance with the Chain of Custody and no significant deviations were encountered during the preparation or analysis unless otherwise noted. Sample Receipt, Container Information, and the Chain of Custody are located at the back of the report.

Results contained within this report relate only to the samples submitted under this Alpha Lab Number and meet all of the requirements of NELAC, for all NELAC accredited parameters. The data presented in this report is organized by parameter (i.e. VOC, SVOC, etc.). Sample specific Quality Control data (i.e. Surrogate Spike Recovery) is reported at the end of the target analyte list for each individual sample, followed by the Laboratory Batch Quality Control at the end of each parameter. If a sample was re-analyzed or re-extracted due to a required quality control corrective action and if both sets of data are reported, the Laboratory ID of the re-analysis or re-extraction is designated with an "R" or "RE", respectively. When multiple Batch Quality Control elements are reported (e.g. more than one LCS), the associated samples for each element are noted in the grey shaded header line of each data table. Any Laboratory Batch, Sample Specific % recovery or RPD value that is outside the listed Acceptance Criteria is bolded in the report. Performance criteria for CAM and RCP methods allow for some LCS compound failures to occur and still be within method compliance. In these instances, the specific failures are not narrated but are noted in the associated QC table. This information is also incorporated in the Data Usability format for our Data Merger tool where it can be reviewed along with any associated usability implications. Soil/sediments, solids and tissues are reported on a dry weight basis unless otherwise noted. Definitions of all data qualifiers and acronyms used in this report are provided in the Glossary located at the back of the report.

In reference to questions H (CAM) or 4 (RCP) when "NO" is checked, the performance criteria for CAM and RCP methods allow for some quality control failures to occur and still be within method compliance. In these instances the specific failure is not narrated but noted in the associated QC table. The information is also incorporated in the Data Usability format of our Data Merger tool where it can be reviewed along with any associated usability implications.

Please see the associated ADEx data file for a comparison of laboratory reporting limits that were achieved with the regulatory Numerical Standards requested on the Chain of Custody.

HOLD POLICY
For samples submitted on hold, Alpha's policy is to hold samples (with the exception of Air canisters) free of charge for 21 calendar days from the date the project is completed. After 21 calendar days, we will dispose of all samples submitted including those put on hold unless you have contacted your Client Service Representative and made arrangements for Alpha to continue to hold the samples. Air canisters will be disposed after 3 business days from the date the project is completed.

Please contact Client Services at 800-624-9220 with any questions.

Project Name:	NBHS IRA PSWS	**Lab Number:**	L1323309
Project Number:	115058	**Report Date:**	12/03/13

Case Narrative (continued)

MCP Related Narratives

Volatile Organics

L1323309-04 was re-analyzed on dilution in order to quantify the sample within the calibration range. The results should be considered estimated, and are qualified with an E flag, for any compounds that exceeded the calibration range in the initial analysis. The re-analysis was performed only for the compound that exceeded the calibration range.

In reference to question H:

The WG654626-2 LCS/LCSD RPD, associated with L1323309-01, -04 and -05, is above the acceptance criteria for acetone (21%).

The initial calibration, associated with L1323309-01, -04 and -05, did not meet the method required minimum response factor on the lowest calibration standard for 1,4-dioxane (0.00221), as well as the average response factor for 1,4-dioxane.

The continuing calibration standard, associated with L1323309-01, -04 and -05, is outside the acceptance criteria for several compounds; however, it is within overall method allowances. A copy of the continuing calibration standard is included as an addendum to this report.

PCBs

L1323309-01 has elevated detection limits due to the dilution required by the elevated concentrations of target compounds in the sample.

In reference to question G:

L1323309-01: One or more of the target analytes did not achieve the requested CAM reporting limits.

In reference to question H:

The surrogate recoveries for L1323309-01 are below the acceptance criteria for 2,4,5,6-tetrachloro-m-xylene (0%) and decachlorobiphenyl (0%) due to the dilution required to quantitate the sample. Re-extraction was not required; therefore, the results of the original analysis are reported.

Project Name:	NBHS IRA PSWS	**Lab Number:**	L1323309
Project Number:	115058	**Report Date:**	12/03/13

Case Narrative (continued)

I, the undersigned, attest under the pains and penalties of perjury that, to the best of my knowledge and belief and based upon my personal inquiry of those responsible for providing the information contained in this analytical report, such information is accurate and complete. This certificate of analysis is not complete unless this page accompanies any and all pages of this report.

Authorized Signature: Cynthia McQueen

Title: Technical Director/Representative

Date: 12/03/13

ORGANICS

VOLATILES

Project Name: NBHS IRA PSWS **Lab Number:** L1323309

Project Number: 115058 **Report Date:** 12/03/13

SAMPLE RESULTS

Lab ID:	L1323309-01	Date Collected:	11/15/13 11:27
Client ID:	INFLUENT	Date Received:	11/15/13
Sample Location:	NEW BEDFORD, MA	Field Prep:	Not Specified
Matrix:	Water		
Analytical Method:	97,8260C		
Analytical Date:	11/26/13 11:42		
Analyst:	MM		

Parameter	Result	Qualifier	Units	RL	MDL	Dilution Factor
MCP Volatile Organics - Westborough Lab						
Methylene chloride	ND		ug/l	2.0	--	1
1,1-Dichloroethane	ND		ug/l	1.0	--	1
Chloroform	ND		ug/l	1.0	--	1
Carbon tetrachloride	ND		ug/l	1.0	--	1
1,2-Dichloropropane	ND		ug/l	1.0	--	1
Dibromochloromethane	ND		ug/l	1.0	--	1
1,1,2-Trichloroethane	ND		ug/l	1.0	--	1
Tetrachloroethene	ND		ug/l	1.0	--	1
Chlorobenzene	ND		ug/l	1.0	--	1
Trichlorofluoromethane	ND		ug/l	2.0	--	1
1,2-Dichloroethane	ND		ug/l	1.0	--	1
1,1,1-Trichloroethane	ND		ug/l	1.0	--	1
Bromodichloromethane	ND		ug/l	1.0	--	1
trans-1,3-Dichloropropene	ND		ug/l	0.50	--	1
cis-1,3-Dichloropropene	ND		ug/l	0.50	--	1
1,1-Dichloropropene	ND		ug/l	2.0	--	1
Bromoform	ND		ug/l	2.0	--	1
1,1,2,2-Tetrachloroethane	ND		ug/l	1.0	--	1
Benzene	ND		ug/l	0.50	--	1
Toluene	ND		ug/l	1.0	--	1
Ethylbenzene	ND		ug/l	1.0	--	1
Chloromethane	ND		ug/l	2.0	--	1
Bromomethane	ND		ug/l	2.0	--	1
Vinyl chloride	8.1		ug/l	1.0	--	1
Chloroethane	ND		ug/l	2.0	--	1
1,1-Dichloroethene	ND		ug/l	1.0	--	1
trans-1,2-Dichloroethene	17		ug/l	1.0	--	1
Trichloroethene	5.7		ug/l	1.0	--	1
1,2-Dichlorobenzene	ND		ug/l	1.0	--	1
1,3-Dichlorobenzene	1.7		ug/l	1.0	--	1
1,4-Dichlorobenzene	4.8		ug/l	1.0	--	1

Project Name: NBHS IRA PSWS **Lab Number:** L1323309

Project Number: 115058 **Report Date:** 12/03/13

SAMPLE RESULTS

Lab ID: L1323309-01 Date Collected: 11/15/13 11:27

Client ID: INFLUENT Date Received: 11/15/13

Sample Location: NEW BEDFORD, MA Field Prep: Not Specified

Parameter	Result	Qualifier	Units	RL	MDL	Dilution Factor
MCP Volatile Organics - Westborough Lab						
Methyl tert butyl ether	ND		ug/l	2.0	--	1
p/m-Xylene	ND		ug/l	2.0	--	1
o-Xylene	ND		ug/l	1.0	--	1
cis-1,2-Dichloroethene	82		ug/l	1.0	--	1
Dibromomethane	ND		ug/l	2.0	--	1
1,2,3-Trichloropropane	ND		ug/l	2.0	--	1
Styrene	ND		ug/l	1.0	--	1
Dichlorodifluoromethane	ND		ug/l	2.0	--	1
Acetone	ND		ug/l	5.0	--	1
Carbon disulfide	ND		ug/l	2.0	--	1
2-Butanone	ND		ug/l	5.0	--	1
4-Methyl-2-pentanone	ND		ug/l	5.0	--	1
2-Hexanone	ND		ug/l	5.0	--	1
Bromochloromethane	ND		ug/l	2.0	--	1
Tetrahydrofuran	ND		ug/l	2.0	--	1
2,2-Dichloropropane	ND		ug/l	2.0	--	1
1,2-Dibromoethane	ND		ug/l	2.0	--	1
1,3-Dichloropropane	ND		ug/l	2.0	--	1
1,1,1,2-Tetrachloroethane	ND		ug/l	1.0	--	1
Bromobenzene	ND		ug/l	2.0	--	1
n-Butylbenzene	ND		ug/l	2.0	--	1
sec-Butylbenzene	ND		ug/l	2.0	--	1
tert-Butylbenzene	ND		ug/l	2.0	--	1
o-Chlorotoluene	ND		ug/l	2.0	--	1
p-Chlorotoluene	ND		ug/l	2.0	--	1
1,2-Dibromo-3-chloropropane	ND		ug/l	2.0	--	1
Hexachlorobutadiene	ND		ug/l	0.60	--	1
Isopropylbenzene	ND		ug/l	2.0	--	1
p-Isopropyltoluene	ND		ug/l	2.0	--	1
Naphthalene	ND		ug/l	2.0	--	1
n-Propylbenzene	ND		ug/l	2.0	--	1
1,2,3-Trichlorobenzene	ND		ug/l	2.0	--	1
1,2,4-Trichlorobenzene	4.5		ug/l	2.0	--	1
1,3,5-Trimethylbenzene	ND		ug/l	2.0	--	1
1,2,4-Trimethylbenzene	ND		ug/l	2.0	--	1
Ethyl ether	ND		ug/l	2.0	--	1
Isopropyl Ether	ND		ug/l	2.0	--	1
Ethyl-Tert-Butyl-Ether	ND		ug/l	2.0	--	1
Tertiary-Amyl Methyl Ether	ND		ug/l	2.0	--	1

Project Name: NBHS IRA PSWS **Lab Number:** L1323309

Project Number: 115058 **Report Date:** 12/03/13

SAMPLE RESULTS

Lab ID: L1323309-01 Date Collected: 11/15/13 11:27

Client ID: INFLUENT Date Received: 11/15/13

Sample Location: NEW BEDFORD, MA Field Prep: Not Specified

Parameter	Result	Qualifier	Units	RL	MDL	Dilution Factor
MCP Volatile Organics - Westborough Lab						
1,4-Dioxane	ND		ug/l	250	--	1

Surrogate	% Recovery	Qualifier	Acceptance Criteria
1,2-Dichloroethane-d4	100		70-130
Toluene-d8	96		70-130
4-Bromofluorobenzene	104		70-130
Dibromofluoromethane	112		70-130

Project Name: NBHS IRA PSWS **Lab Number:** L1323309

Project Number: 115058 **Report Date:** 12/03/13

SAMPLE RESULTS

Lab ID:	L1323309-04	Date Collected:	11/15/13 11:50
Client ID:	EFFLUENT	Date Received:	11/15/13
Sample Location:	NEW BEDFORD, MA	Field Prep:	Not Specified
Matrix:	Water		
Analytical Method:	97,8260C		
Analytical Date:	11/26/13 08:26		
Analyst:	MM		

Parameter	Result	Qualifier	Units	RL	MDL	Dilution Factor
MCP Volatile Organics - Westborough Lab						
Methylene chloride	ND		ug/l	2.0	--	1
1,1-Dichloroethane	ND		ug/l	1.0	--	1
Chloroform	ND		ug/l	1.0	--	1
Carbon tetrachloride	ND		ug/l	1.0	--	1
1,2-Dichloropropane	ND		ug/l	1.0	--	1
Dibromochloromethane	ND		ug/l	1.0	--	1
1,1,2-Trichloroethane	ND		ug/l	1.0	--	1
Tetrachloroethene	ND		ug/l	1.0	--	1
Chlorobenzene	ND		ug/l	1.0	--	1
Trichlorofluoromethane	ND		ug/l	2.0	--	1
1,2-Dichloroethane	ND		ug/l	1.0	--	1
1,1,1-Trichloroethane	ND		ug/l	1.0	--	1
Bromodichloromethane	ND		ug/l	1.0	--	1
trans-1,3-Dichloropropene	ND		ug/l	0.50	--	1
cis-1,3-Dichloropropene	ND		ug/l	0.50	--	1
1,1-Dichloropropene	ND		ug/l	2.0	--	1
Bromoform	ND		ug/l	2.0	--	1
1,1,2,2-Tetrachloroethane	ND		ug/l	1.0	--	1
Benzene	ND		ug/l	0.50	--	1
Toluene	ND		ug/l	1.0	--	1
Ethylbenzene	ND		ug/l	1.0	--	1
Chloromethane	ND		ug/l	2.0	--	1
Bromomethane	ND		ug/l	2.0	--	1
Vinyl chloride	ND		ug/l	1.0	--	1
Chloroethane	ND		ug/l	2.0	--	1
1,1-Dichloroethene	ND		ug/l	1.0	--	1
trans-1,2-Dichloroethene	14		ug/l	1.0	--	1
Trichloroethene	ND		ug/l	1.0	--	1
1,2-Dichlorobenzene	ND		ug/l	1.0	--	1
1,3-Dichlorobenzene	ND		ug/l	1.0	--	1
1,4-Dichlorobenzene	ND		ug/l	1.0	--	1

Project Name: NBHS IRA PSWS **Lab Number:** L1323309

Project Number: 115058 **Report Date:** 12/03/13

SAMPLE RESULTS

Lab ID: L1323309-04 Date Collected: 11/15/13 11:50

Client ID: EFFLUENT Date Received: 11/15/13

Sample Location: NEW BEDFORD, MA Field Prep: Not Specified

Parameter	Result	Qualifier	Units	RL	MDL	Dilution Factor
MCP Volatile Organics - Westborough Lab						
Methyl tert butyl ether	ND		ug/l	2.0	--	1
p/m-Xylene	ND		ug/l	2.0	--	1
o-Xylene	ND		ug/l	1.0	--	1
cis-1,2-Dichloroethene	300	E	ug/l	1.0	--	1
Dibromomethane	ND		ug/l	2.0	--	1
1,2,3-Trichloropropane	ND		ug/l	2.0	--	1
Styrene	ND		ug/l	1.0	--	1
Dichlorodifluoromethane	ND		ug/l	2.0	--	1
Acetone	ND		ug/l	5.0	--	1
Carbon disulfide	ND		ug/l	2.0	--	1
2-Butanone	ND		ug/l	5.0	--	1
4-Methyl-2-pentanone	ND		ug/l	5.0	--	1
2-Hexanone	ND		ug/l	5.0	--	1
Bromochloromethane	ND		ug/l	2.0	--	1
Tetrahydrofuran	ND		ug/l	2.0	--	1
2,2-Dichloropropane	ND		ug/l	2.0	--	1
1,2-Dibromoethane	ND		ug/l	2.0	--	1
1,3-Dichloropropane	ND		ug/l	2.0	--	1
1,1,1,2-Tetrachloroethane	ND		ug/l	1.0	--	1
Bromobenzene	ND		ug/l	2.0	--	1
n-Butylbenzene	ND		ug/l	2.0	--	1
sec-Butylbenzene	ND		ug/l	2.0	--	1
tert-Butylbenzene	ND		ug/l	2.0	--	1
o-Chlorotoluene	ND		ug/l	2.0	--	1
p-Chlorotoluene	ND		ug/l	2.0	--	1
1,2-Dibromo-3-chloropropane	ND		ug/l	2.0	--	1
Hexachlorobutadiene	ND		ug/l	0.60	--	1
Isopropylbenzene	ND		ug/l	2.0	--	1
p-Isopropyltoluene	ND		ug/l	2.0	--	1
Naphthalene	ND		ug/l	2.0	--	1
n-Propylbenzene	ND		ug/l	2.0	--	1
1,2,3-Trichlorobenzene	ND		ug/l	2.0	--	1
1,2,4-Trichlorobenzene	ND		ug/l	2.0	--	1
1,3,5-Trimethylbenzene	ND		ug/l	2.0	--	1
1,2,4-Trimethylbenzene	ND		ug/l	2.0	--	1
Ethyl ether	ND		ug/l	2.0	--	1
Isopropyl Ether	ND		ug/l	2.0	--	1
Ethyl-Tert-Butyl-Ether	ND		ug/l	2.0	--	1
Tertiary-Amyl Methyl Ether	ND		ug/l	2.0	--	1

Project Name: NBHS IRA PSWS **Lab Number:** L1323309

Project Number: 115058 **Report Date:** 12/03/13

SAMPLE RESULTS

Lab ID: L1323309-04 Date Collected: 11/15/13 11:50

Client ID: EFFLUENT Date Received: 11/15/13

Sample Location: NEW BEDFORD, MA Field Prep: Not Specified

Parameter	Result	Qualifier	Units	RL	MDL	Dilution Factor
MCP Volatile Organics - Westborough Lab						
1,4-Dioxane	ND		ug/l	250	--	1

Surrogate	% Recovery	Qualifier	Acceptance Criteria
1,2-Dichloroethane-d4	104		70-130
Toluene-d8	99		70-130
4-Bromofluorobenzene	105		70-130
Dibromofluoromethane	114		70-130

Project Name: NBHS IRA PSWS **Lab Number:** L1323309

Project Number: 115058 **Report Date:** 12/03/13

SAMPLE RESULTS

Lab ID:	L1323309-04 D	Date Collected:	11/15/13 11:50
Client ID:	EFFLUENT	Date Received:	11/15/13
Sample Location:	NEW BEDFORD, MA	Field Prep:	Not Specified
Matrix:	Water		
Analytical Method:	97,8260C		
Analytical Date:	11/26/13 12:14		
Analyst:	MM		

Parameter	Result	Qualifier	Units	RL	MDL	Dilution Factor
MCP Volatile Organics - Westborough Lab						
cis-1,2-Dichloroethene	280		ug/l	10	--	10

Surrogate	% Recovery	Qualifier	Acceptance Criteria
1,2-Dichloroethane-d4	103		70-130
Toluene-d8	95		70-130
4-Bromofluorobenzene	109		70-130
Dibromofluoromethane	111		70-130

Project Name: NBHS IRA PSWS **Lab Number:** L1323309

Project Number: 115058 **Report Date:** 12/03/13

SAMPLE RESULTS

Lab ID:	L1323309-05	Date Collected:	11/15/13 00:00
Client ID:	TRIP BLANK	Date Received:	11/15/13
Sample Location:	NEW BEDFORD, MA	Field Prep:	Not Specified
Matrix:	Water		
Analytical Method:	97,8260C		
Analytical Date:	11/26/13 07:21		
Analyst:	MM		

Parameter	Result	Qualifier	Units	RL	MDL	Dilution Factor
MCP Volatile Organics - Westborough Lab						
Methylene chloride	ND		ug/l	2.0	--	1
1,1-Dichloroethane	ND		ug/l	1.0	--	1
Chloroform	ND		ug/l	1.0	--	1
Carbon tetrachloride	ND		ug/l	1.0	--	1
1,2-Dichloropropane	ND		ug/l	1.0	--	1
Dibromochloromethane	ND		ug/l	1.0	--	1
1,1,2-Trichloroethane	ND		ug/l	1.0	--	1
Tetrachloroethene	ND		ug/l	1.0	--	1
Chlorobenzene	ND		ug/l	1.0	--	1
Trichlorofluoromethane	ND		ug/l	2.0	--	1
1,2-Dichloroethane	ND		ug/l	1.0	--	1
1,1,1-Trichloroethane	ND		ug/l	1.0	--	1
Bromodichloromethane	ND		ug/l	1.0	--	1
trans-1,3-Dichloropropene	ND		ug/l	0.50	--	1
cis-1,3-Dichloropropene	ND		ug/l	0.50	--	1
1,1-Dichloropropene	ND		ug/l	2.0	--	1
Bromoform	ND		ug/l	2.0	--	1
1,1,2,2-Tetrachloroethane	ND		ug/l	1.0	--	1
Benzene	ND		ug/l	0.50	--	1
Toluene	ND		ug/l	1.0	--	1
Ethylbenzene	ND		ug/l	1.0	--	1
Chloromethane	ND		ug/l	2.0	--	1
Bromomethane	ND		ug/l	2.0	--	1
Vinyl chloride	ND		ug/l	1.0	--	1
Chloroethane	ND		ug/l	2.0	--	1
1,1-Dichloroethene	ND		ug/l	1.0	--	1
trans-1,2-Dichloroethene	ND		ug/l	1.0	--	1
Trichloroethene	ND		ug/l	1.0	--	1
1,2-Dichlorobenzene	ND		ug/l	1.0	--	1
1,3-Dichlorobenzene	ND		ug/l	1.0	--	1
1,4-Dichlorobenzene	ND		ug/l	1.0	--	1

Project Name: NBHS IRA PSWS **Lab Number:** L1323309

Project Number: 115058 **Report Date:** 12/03/13

SAMPLE RESULTS

Lab ID: L1323309-05 Date Collected: 11/15/13 00:00

Client ID: TRIP BLANK Date Received: 11/15/13

Sample Location: NEW BEDFORD, MA Field Prep: Not Specified

Parameter	Result	Qualifier	Units	RL	MDL	Dilution Factor
MCP Volatile Organics - Westborough Lab						
Methyl tert butyl ether	ND		ug/l	2.0	--	1
p/m-Xylene	ND		ug/l	2.0	--	1
o-Xylene	ND		ug/l	1.0	--	1
cis-1,2-Dichloroethene	ND		ug/l	1.0	--	1
Dibromomethane	ND		ug/l	2.0	--	1
1,2,3-Trichloropropane	ND		ug/l	2.0	--	1
Styrene	ND		ug/l	1.0	--	1
Dichlorodifluoromethane	ND		ug/l	2.0	--	1
Acetone	ND		ug/l	5.0	--	1
Carbon disulfide	ND		ug/l	2.0	--	1
2-Butanone	ND		ug/l	5.0	--	1
4-Methyl-2-pentanone	ND		ug/l	5.0	--	1
2-Hexanone	ND		ug/l	5.0	--	1
Bromochloromethane	ND		ug/l	2.0	--	1
Tetrahydrofuran	ND		ug/l	2.0	--	1
2,2-Dichloropropane	ND		ug/l	2.0	--	1
1,2-Dibromoethane	ND		ug/l	2.0	--	1
1,3-Dichloropropane	ND		ug/l	2.0	--	1
1,1,1,2-Tetrachloroethane	ND		ug/l	1.0	--	1
Bromobenzene	ND		ug/l	2.0	--	1
n-Butylbenzene	ND		ug/l	2.0	--	1
sec-Butylbenzene	ND		ug/l	2.0	--	1
tert-Butylbenzene	ND		ug/l	2.0	--	1
o-Chlorotoluene	ND		ug/l	2.0	--	1
p-Chlorotoluene	ND		ug/l	2.0	--	1
1,2-Dibromo-3-chloropropane	ND		ug/l	2.0	--	1
Hexachlorobutadiene	ND		ug/l	0.60	--	1
Isopropylbenzene	ND		ug/l	2.0	--	1
p-Isopropyltoluene	ND		ug/l	2.0	--	1
Naphthalene	ND		ug/l	2.0	--	1
n-Propylbenzene	ND		ug/l	2.0	--	1
1,2,3-Trichlorobenzene	ND		ug/l	2.0	--	1
1,2,4-Trichlorobenzene	ND		ug/l	2.0	--	1
1,3,5-Trimethylbenzene	ND		ug/l	2.0	--	1
1,2,4-Trimethylbenzene	ND		ug/l	2.0	--	1
Ethyl ether	ND		ug/l	2.0	--	1
Isopropyl Ether	ND		ug/l	2.0	--	1
Ethyl-Tert-Butyl-Ether	ND		ug/l	2.0	--	1
Tertiary-Amyl Methyl Ether	ND		ug/l	2.0	--	1

Project Name: NBHS IRA PSWS **Lab Number:** L1323309

Project Number: 115058 **Report Date:** 12/03/13

SAMPLE RESULTS

Lab ID: L1323309-05 Date Collected: 11/15/13 00:00

Client ID: TRIP BLANK Date Received: 11/15/13

Sample Location: NEW BEDFORD, MA Field Prep: Not Specified

Parameter	Result	Qualifier	Units	RL	MDL	Dilution Factor
MCP Volatile Organics - Westborough Lab						
1,4-Dioxane	ND		ug/l	250	--	1

Surrogate	% Recovery	Qualifier	Acceptance Criteria
1,2-Dichloroethane-d4	103		70-130
Toluene-d8	97		70-130
4-Bromofluorobenzene	106		70-130
Dibromofluoromethane	108		70-130

Project Name: NBHS IRA PSWS **Lab Number:** L1323309

Project Number: 115058 **Report Date:** 12/03/13

Method Blank Analysis
Batch Quality Control

Analytical Method: 97,8260C
Analytical Date: 11/26/13 06:48
Analyst: MM

Parameter	Result	Qualifier	Units	RL	MDL
MCP Volatile Organics - Westborough Lab for sample(s): 01,04-05 Batch: WG654626-3					
Methylene chloride	ND		ug/l	2.0	--
1,1-Dichloroethane	ND		ug/l	1.0	--
Chloroform	ND		ug/l	1.0	--
Carbon tetrachloride	ND		ug/l	1.0	--
1,2-Dichloropropane	ND		ug/l	1.0	--
Dibromochloromethane	ND		ug/l	1.0	--
1,1,2-Trichloroethane	ND		ug/l	1.0	--
Tetrachloroethene	ND		ug/l	1.0	--
Chlorobenzene	ND		ug/l	1.0	--
Trichlorofluoromethane	ND		ug/l	2.0	--
1,2-Dichloroethane	ND		ug/l	1.0	--
1,1,1-Trichloroethane	ND		ug/l	1.0	--
Bromodichloromethane	ND		ug/l	1.0	--
trans-1,3-Dichloropropene	ND		ug/l	0.50	--
cis-1,3-Dichloropropene	ND		ug/l	0.50	--
1,1-Dichloropropene	ND		ug/l	2.0	--
Bromoform	ND		ug/l	2.0	--
1,1,2,2-Tetrachloroethane	ND		ug/l	1.0	--
Benzene	ND		ug/l	0.50	--
Toluene	ND		ug/l	1.0	--
Ethylbenzene	ND		ug/l	1.0	--
Chloromethane	ND		ug/l	2.0	--
Bromomethane	ND		ug/l	2.0	--
Vinyl chloride	ND		ug/l	1.0	--
Chloroethane	ND		ug/l	2.0	--
1,1-Dichloroethene	ND		ug/l	1.0	--
trans-1,2-Dichloroethene	ND		ug/l	1.0	--
Trichloroethene	ND		ug/l	1.0	--
1,2-Dichlorobenzene	ND		ug/l	1.0	--
1,3-Dichlorobenzene	ND		ug/l	1.0	--
1,4-Dichlorobenzene	ND		ug/l	1.0	--

Project Name: NBHS IRA PSWS **Lab Number:** L1323309

Project Number: 115058 **Report Date:** 12/03/13

Method Blank Analysis
Batch Quality Control

Analytical Method: 97,8260C
Analytical Date: 11/26/13 06:48
Analyst: MM

Parameter	Result	Qualifier	Units	RL	MDL
MCP Volatile Organics - Westborough Lab for sample(s): 01,04-05 Batch: WG654626-3					
Methyl tert butyl ether	ND		ug/l	2.0	--
p/m-Xylene	ND		ug/l	2.0	--
o-Xylene	ND		ug/l	1.0	--
cis-1,2-Dichloroethene	ND		ug/l	1.0	--
Dibromomethane	ND		ug/l	2.0	--
1,2,3-Trichloropropane	ND		ug/l	2.0	--
Styrene	ND		ug/l	1.0	--
Dichlorodifluoromethane	ND		ug/l	2.0	--
Acetone	ND		ug/l	5.0	--
Carbon disulfide	ND		ug/l	2.0	--
2-Butanone	ND		ug/l	5.0	--
4-Methyl-2-pentanone	ND		ug/l	5.0	--
2-Hexanone	ND		ug/l	5.0	--
Bromochloromethane	ND		ug/l	2.0	--
Tetrahydrofuran	ND		ug/l	2.0	--
2,2-Dichloropropane	ND		ug/l	2.0	--
1,2-Dibromoethane	ND		ug/l	2.0	--
1,3-Dichloropropane	ND		ug/l	2.0	--
1,1,1,2-Tetrachloroethane	ND		ug/l	1.0	--
Bromobenzene	ND		ug/l	2.0	--
n-Butylbenzene	ND		ug/l	2.0	--
sec-Butylbenzene	ND		ug/l	2.0	--
tert-Butylbenzene	ND		ug/l	2.0	--
o-Chlorotoluene	ND		ug/l	2.0	--
p-Chlorotoluene	ND		ug/l	2.0	--
1,2-Dibromo-3-chloropropane	ND		ug/l	2.0	--
Hexachlorobutadiene	ND		ug/l	0.60	--
Isopropylbenzene	ND		ug/l	2.0	--
p-Isopropyltoluene	ND		ug/l	2.0	--
Naphthalene	ND		ug/l	2.0	--
n-Propylbenzene	ND		ug/l	2.0	--

Project Name: NBHS IRA PSWS **Lab Number:** L1323309

Project Number: 115058 **Report Date:** 12/03/13

Method Blank Analysis
Batch Quality Control

Analytical Method: 97,8260C
Analytical Date: 11/26/13 06:48
Analyst: MM

Parameter	Result	Qualifier	Units	RL	MDL
MCP Volatile Organics - Westborough Lab for sample(s): 01,04-05 Batch: WG654626-3					
1,2,3-Trichlorobenzene	ND		ug/l	2.0	--
1,2,4-Trichlorobenzene	ND		ug/l	2.0	--
1,3,5-Trimethylbenzene	ND		ug/l	2.0	--
1,2,4-Trimethylbenzene	ND		ug/l	2.0	--
Ethyl ether	ND		ug/l	2.0	--
Isopropyl Ether	ND		ug/l	2.0	--
Ethyl-Tert-Butyl-Ether	ND		ug/l	2.0	--
Tertiary-Amyl Methyl Ether	ND		ug/l	2.0	--
1,4-Dioxane	ND		ug/l	250	--
2-Chloroethylvinyl ether	ND		ug/l	10	--

Surrogate	%Recovery	Qualifier	Acceptance Criteria
1,2-Dichloroethane-d4	101		70-130
Toluene-d8	98		70-130
4-Bromofluorobenzene	106		70-130
Dibromofluoromethane	103		70-130

Lab Control Sample Analysis
Batch Quality Control

Project Name: NBHS IRA PSWS
Project Number: 115058

Lab Number: L1323309
Report Date: 12/03/13

Parameter	LCS %Recovery	Qual	LCSD %Recovery	Qual	%Recovery Limits	RPD	Qual	RPD Limits
MCP Volatile Organics - Westborough Lab Associated sample(s): 01,04-05 Batch: WG654626-1 WG654626-2								
Methylene chloride	95		98		70-130	3		20
1,1-Dichloroethane	97		97		70-130	0		20
Chloroform	107		109		70-130	2		20
Carbon tetrachloride	108		109		70-130	1		20
1,2-Dichloropropane	104		103		70-130	1		20
Dibromochloromethane	86		87		70-130	1		20
1,1,2-Trichloroethane	102		98		70-130	4		20
Tetrachloroethene	106		107		70-130	1		20
Chlorobenzene	102		103		70-130	1		20
Trichlorofluoromethane	84		87		70-130	4		20
1,2-Dichloroethane	108		107		70-130	1		20
1,1,1-Trichloroethane	109		109		70-130	0		20
Bromodichloromethane	105		106		70-130	1		20
trans-1,3-Dichloropropene	86		88		70-130	2		20
cis-1,3-Dichloropropene	101		101		70-130	0		20
1,1-Dichloropropene	105		104		70-130	1		20
Bromoform	92		94		70-130	2		20
1,1,2,2-Tetrachloroethane	104		103		70-130	1		20
Benzene	104		105		70-130	1		20
Toluene	102		102		70-130	0		20
Ethylbenzene	104		104		70-130	0		20

Lab Control Sample Analysis
Batch Quality Control

Project Name: NBHS IRA PSWS
Project Number: 115058
Lab Number: L1323309
Report Date: 12/03/13

Parameter	LCS %Recovery	Qual	LCSD %Recovery	Qual	%Recovery Limits	RPD	Qual	RPD Limits
MCP Volatile Organics - Westborough Lab Associated sample(s): 01,04-05 Batch: WG654626-1 WG654626-2								
Chloromethane	109		102		70-130	7		20
Bromomethane	73		75		70-130	3		20
Vinyl chloride	98		101		70-130	3		20
Chloroethane	95		96		70-130	1		20
1,1-Dichloroethene	92		91		70-130	1		20
trans-1,2-Dichloroethene	91		94		70-130	3		20
Trichloroethene	106		107		70-130	1		20
1,2-Dichlorobenzene	101		102		70-130	1		20
1,3-Dichlorobenzene	101		102		70-130	1		20
1,4-Dichlorobenzene	103		103		70-130	0		20
Methyl tert butyl ether	92		90		70-130	2		20
p/m-Xylene	103		104		70-130	1		20
o-Xylene	102		102		70-130	0		20
cis-1,2-Dichloroethene	107		108		70-130	1		20
Dibromomethane	102		102		70-130	0		20
1,2,3-Trichloropropane	105		106		70-130	1		20
Styrene	101		98		70-130	3		20
Dichlorodifluoromethane	98		99		70-130	1		20
Acetone	109		88		70-130	**21**	Q	20
Carbon disulfide	92		93		70-130	1		20
2-Butanone	111		94		70-130	17		20

Lab Control Sample Analysis
Batch Quality Control

Project Name: NBHS IRA PSWS
Project Number: 115058

Lab Number: L1323309
Report Date: 12/03/13

Parameter	LCS %Recovery	Qual	LCSD %Recovery	Qual	%Recovery Limits	RPD	Qual	RPD Limits
MCP Volatile Organics - Westborough Lab Associated sample(s): 01,04-05 Batch: WG654626-1 WG654626-2								
4-Methyl-2-pentanone	98		100		70-130	2		20
2-Hexanone	104		98		70-130	6		20
Bromochloromethane	105		108		70-130	3		20
Tetrahydrofuran	103		94		70-130	9		20
2,2-Dichloropropane	108		108		70-130	0		20
1,2-Dibromoethane	98		97		70-130	1		20
1,3-Dichloropropane	99		100		70-130	1		20
1,1,1,2-Tetrachloroethane	91		91		70-130	0		20
Bromobenzene	106		103		70-130	3		20
n-Butylbenzene	106		106		70-130	0		20
sec-Butylbenzene	107		107		70-130	0		20
tert-Butylbenzene	108		108		70-130	0		20
o-Chlorotoluene	106		107		70-130	1		20
p-Chlorotoluene	106		106		70-130	0		20
1,2-Dibromo-3-chloropropane	97		99		70-130	2		20
Hexachlorobutadiene	120		123		70-130	2		20
Isopropylbenzene	107		107		70-130	0		20
p-Isopropyltoluene	108		107		70-130	1		20
Naphthalene	101		100		70-130	1		20
n-Propylbenzene	107		108		70-130	1		20
1,2,3-Trichlorobenzene	104		105		70-130	1		20

Lab Control Sample Analysis
Batch Quality Control

Project Name: NBHS IRA PSWS
Project Number: 115058

Lab Number: L1323309
Report Date: 12/03/13

Parameter	LCS %Recovery	Qual	LCSD %Recovery	Qual	%Recovery Limits	RPD	Qual	RPD Limits
MCP Volatile Organics - Westborough Lab Associated sample(s): 01,04-05 Batch: WG654626-1 WG654626-2								
1,2,4-Trichlorobenzene	102		103		70-130	1		20
1,3,5-Trimethylbenzene	107		109		70-130	2		20
1,2,4-Trimethylbenzene	106		107		70-130	1		20
Ethyl ether	90		88		70-130	2		20
Isopropyl Ether	99		99		70-130	0		20
Ethyl-Tert-Butyl-Ether	102		101		70-130	1		20
Tertiary-Amyl Methyl Ether	101		100		70-130	1		20
1,4-Dioxane	114		128		70-130	12		20
2-Chloroethylvinyl ether	104		104		70-130	0		20

Surrogate	LCS %Recovery	Qual	LCSD %Recovery	Qual	Acceptance Criteria
1,2-Dichloroethane-d4	99		96		70-130
Toluene-d8	100		99		70-130
4-Bromofluorobenzene	107		105		70-130
Dibromofluoromethane	103		102		70-130

PETROLEUM HYDROCARBONS

Project Name: NBHS IRA PSWS **Lab Number:** L1323309

Project Number: 115058 **Report Date:** 12/03/13

SAMPLE RESULTS

Lab ID:	L1323309-01	Date Collected:	11/15/13 11:27
Client ID:	INFLUENT	Date Received:	11/15/13
Sample Location:	NEW BEDFORD, MA	Field Prep:	Not Specified
Matrix:	Water	Extraction Method:	EPA 3510C
Analytical Method:	1,8015C(M)	Extraction Date:	11/17/13 14:28
Analytical Date:	11/18/13 17:05		
Analyst:	AR		

Parameter	Result	Qualifier	Units	RL	MDL	Dilution Factor
Petroleum Hydrocarbon Quantitation - Westborough Lab						
TPH	464		ug/l	200	--	1

Surrogate	% Recovery	Qualifier	Acceptance Criteria
o-Terphenyl	94		40-140

Project Name: NBHS IRA PSWS **Lab Number:** L1323309

Project Number: 115058 **Report Date:** 12/03/13

SAMPLE RESULTS

Lab ID:	L1323309-02	Date Collected:	11/15/13 11:27
Client ID:	INFLUENT (FILTERED)	Date Received:	11/15/13
Sample Location:	NEW BEDFORD, MA	Field Prep:	Not Specified
Matrix:	Water	Extraction Method:	EPA 3510C
Analytical Method:	1,8015C(M)	Extraction Date:	11/21/13 10:24
Analytical Date:	11/22/13 15:08		
Analyst:	AR		

Parameter	Result	Qualifier	Units	RL	MDL	Dilution Factor
Petroleum Hydrocarbon Quantitation - Westborough Lab						
TPH	ND		ug/l	200	--	1

Surrogate	% Recovery	Qualifier	Acceptance Criteria
o-Terphenyl	113		40-140

Project Name: NBHS IRA PSWS
Project Number: 115058

Lab Number: L1323309
Report Date: 12/03/13

Method Blank Analysis
Batch Quality Control

Analytical Method: 1,8015C(M)
Analytical Date: 11/18/13 13:59
Analyst: AR

Extraction Method: EPA 3510C
Extraction Date: 11/17/13 14:28

Parameter	Result	Qualifier	Units	RL	MDL
Petroleum Hydrocarbon Quantitation - Westborough Lab for sample(s): 01 Batch: WG652360-1					
TPH	ND		ug/l	200	--

Surrogate	%Recovery	Qualifier	Acceptance Criteria
o-Terphenyl	120		40-140

Project Name: NBHS IRA PSWS
Project Number: 115058

Lab Number: L1323309
Report Date: 12/03/13

Method Blank Analysis
Batch Quality Control

Analytical Method: 1,8015C(M)
Analytical Date: 11/22/13 11:32
Analyst: AR

Extraction Method: EPA 3510C
Extraction Date: 11/21/13 10:24

Parameter	Result	Qualifier	Units	RL	MDL
Petroleum Hydrocarbon Quantitation - Westborough Lab for sample(s): 02 Batch: WG653469-1					
TPH	ND		ug/l	200	--

Surrogate	%Recovery	Qualifier	Acceptance Criteria
o-Terphenyl	109		40-140

Lab Control Sample Analysis
Batch Quality Control

Project Name: NBHS IRA PSWS
Project Number: 115058

Lab Number: L1323309
Report Date: 12/03/13

Parameter	LCS %Recovery	Qual	LCSD %Recovery	Qual	%Recovery Limits	RPD	Qual	RPD Limits
Petroleum Hydrocarbon Quantitation - Westborough Lab Associated sample(s): 01 Batch: WG652360-2								
TPH	109		-		40-140	-		40

Surrogate	LCS %Recovery	Qual	LCSD %Recovery	Qual	Acceptance Criteria
o-Terphenyl	116				40-140

Lab Control Sample Analysis
Batch Quality Control

Project Name: NBHS IRA PSWS
Project Number: 115058

Lab Number: L1323309
Report Date: 12/03/13

Parameter	LCS %Recovery	Qual	LCSD %Recovery	Qual	%Recovery Limits	RPD	Qual	RPD Limits
Petroleum Hydrocarbon Quantitation - Westborough Lab Associated sample(s): 02 Batch: WG653469-2								
TPH	96		-		40-140	-		40

Surrogate	LCS %Recovery	Qual	LCSD %Recovery	Qual	Acceptance Criteria
o-Terphenyl	100				40-140

Lab Duplicate Analysis
Batch Quality Control

Project Name: NBHS IRA PSWS
Project Number: 115058

Lab Number: L1323309
Report Date: 12/03/13

Parameter	Native Sample	Duplicate Sample	Units	RPD	Qual	RPD Limits
Petroleum Hydrocarbon Quantitation - Westborough Lab Associated sample(s): 01 QC Batch ID: WG652360-3 QC Sample: L1323102-16 Client ID: DUP Sample						
TPH	2180	2160	ug/l	1		40

Surrogate	%Recovery	Qualifier	%Recovery	Qualifier	Acceptance Criteria
o-Terphenyl	122		118		40-140

Petroleum Hydrocarbon Quantitation - Westborough Lab Associated sample(s): 02 QC Batch ID: WG653469-3 QC Sample: L1323448-02 Client ID: DUP Sample						
TPH	ND	ND	ug/l	NC		40

Surrogate	%Recovery	Qualifier	%Recovery	Qualifier	Acceptance Criteria
o-Terphenyl	116		113		40-140

PCBS

Project Name: NBHS IRA PSWS **Lab Number:** L1323309

Project Number: 115058 **Report Date:** 12/03/13

SAMPLE RESULTS

Lab ID:	L1323309-01	D	Date Collected:	11/15/13 11:27
Client ID:	INFLUENT		Date Received:	11/15/13
Sample Location:	NEW BEDFORD, MA		Field Prep:	Not Specified
Matrix:	Water		Extraction Method:	EPA 3510C
Analytical Method:	97,8082A		Extraction Date:	11/27/13 19:37
Analytical Date:	12/03/13 13:47		Cleanup Method1:	EPA 3665A
Analyst:	TQ		Cleanup Date1:	11/29/13
			Cleanup Method2:	EPA 3660B
			Cleanup Date2:	11/29/13

Parameter	Result	Qualifier	Units	RL	MDL	Dilution Factor	Column
MCP Polychlorinated Biphenyls - Westborough Lab							
Aroclor 1016	ND		ug/l	2.50	--	10	A
Aroclor 1221	ND		ug/l	2.50	--	10	A
Aroclor 1232	ND		ug/l	2.50	--	10	A
Aroclor 1242	ND		ug/l	2.50	--	10	A
Aroclor 1248	ND		ug/l	2.50	--	10	A
Aroclor 1254	88.5		ug/l	2.50	--	10	B
Aroclor 1260	ND		ug/l	2.50	--	10	A
Aroclor 1262	ND		ug/l	2.50	--	10	A
Aroclor 1268	ND		ug/l	2.50	--	10	A

Surrogate	% Recovery	Qualifier	Acceptance Criteria	Column
2,4,5,6-Tetrachloro-m-xylene	**0**	Q	30-150	A
Decachlorobiphenyl	**0**	Q	30-150	A
2,4,5,6-Tetrachloro-m-xylene	**0**	Q	30-150	B
Decachlorobiphenyl	**0**	Q	30-150	B

Project Name: NBHS IRA PSWS **Lab Number:** L1323309

Project Number: 115058 **Report Date:** 12/03/13

SAMPLE RESULTS

Lab ID:	L1323309-02	Date Collected:	11/15/13 11:27
Client ID:	INFLUENT (FILTERED)	Date Received:	11/15/13
Sample Location:	NEW BEDFORD, MA	Field Prep:	Not Specified
Matrix:	Water	Extraction Method:	EPA 3510C
Analytical Method:	97,8082A	Extraction Date:	11/27/13 19:37
Analytical Date:	11/30/13 00:15	Cleanup Method1:	EPA 3665A
Analyst:	TQ	Cleanup Date1:	11/29/13
		Cleanup Method2:	EPA 3660B
		Cleanup Date2:	11/29/13

Parameter	Result	Qualifier	Units	RL	MDL	Dilution Factor	Column
MCP Polychlorinated Biphenyls - Westborough Lab							
Aroclor 1016	ND		ug/l	0.250	--	1	A
Aroclor 1221	ND		ug/l	0.250	--	1	A
Aroclor 1232	ND		ug/l	0.250	--	1	A
Aroclor 1242	ND		ug/l	0.250	--	1	A
Aroclor 1248	ND		ug/l	0.250	--	1	A
Aroclor 1254	1.45		ug/l	0.250	--	1	B
Aroclor 1260	ND		ug/l	0.250	--	1	A
Aroclor 1262	ND		ug/l	0.250	--	1	A
Aroclor 1268	ND		ug/l	0.250	--	1	A

Surrogate	% Recovery	Qualifier	Acceptance Criteria	Column
2,4,5,6-Tetrachloro-m-xylene	58		30-150	A
Decachlorobiphenyl	71		30-150	A
2,4,5,6-Tetrachloro-m-xylene	58		30-150	B
Decachlorobiphenyl	69		30-150	B

Project Name: NBHS IRA PSWS **Lab Number:** L1323309

Project Number: 115058 **Report Date:** 12/03/13

SAMPLE RESULTS

Lab ID:	L1323309-03	Date Collected:	11/15/13 11:40
Client ID:	INTRACARBON	Date Received:	11/15/13
Sample Location:	NEW BEDFORD, MA	Field Prep:	Not Specified
Matrix:	Water	Extraction Method:	EPA 3510C
Analytical Method:	97,8082A	Extraction Date:	11/27/13 19:37
Analytical Date:	11/30/13 00:27	Cleanup Method1:	EPA 3665A
Analyst:	TQ	Cleanup Date1:	11/29/13
		Cleanup Method2:	EPA 3660B
		Cleanup Date2:	11/29/13

Parameter	Result	Qualifier	Units	RL	MDL	Dilution Factor	Column
MCP Polychlorinated Biphenyls - Westborough Lab							
Aroclor 1016	ND		ug/l	0.250	--	1	A
Aroclor 1221	ND		ug/l	0.250	--	1	A
Aroclor 1232	ND		ug/l	0.250	--	1	A
Aroclor 1242	ND		ug/l	0.250	--	1	A
Aroclor 1248	ND		ug/l	0.250	--	1	A
Aroclor 1254	ND		ug/l	0.250	--	1	A
Aroclor 1260	ND		ug/l	0.250	--	1	A
Aroclor 1262	ND		ug/l	0.250	--	1	A
Aroclor 1268	ND		ug/l	0.250	--	1	A

Surrogate	% Recovery	Qualifier	Acceptance Criteria	Column
2,4,5,6-Tetrachloro-m-xylene	58		30-150	A
Decachlorobiphenyl	72		30-150	A
2,4,5,6-Tetrachloro-m-xylene	60		30-150	B
Decachlorobiphenyl	71		30-150	B

Project Name: NBHS IRA PSWS **Lab Number:** L1323309

Project Number: 115058 **Report Date:** 12/03/13

SAMPLE RESULTS

Lab ID:	L1323309-04	Date Collected:	11/15/13 11:50
Client ID:	EFFLUENT	Date Received:	11/15/13
Sample Location:	NEW BEDFORD, MA	Field Prep:	Not Specified
Matrix:	Water	Extraction Method:	EPA 3510C
Analytical Method:	97,8082A	Extraction Date:	11/27/13 19:37
Analytical Date:	11/30/13 00:40	Cleanup Method1:	EPA 3665A
Analyst:	TQ	Cleanup Date1:	11/29/13
		Cleanup Method2:	EPA 3660B
		Cleanup Date2:	11/29/13

Parameter	Result	Qualifier	Units	RL	MDL	Dilution Factor	Column
MCP Polychlorinated Biphenyls - Westborough Lab							
Aroclor 1016	ND		ug/l	0.250	--	1	A
Aroclor 1221	ND		ug/l	0.250	--	1	A
Aroclor 1232	ND		ug/l	0.250	--	1	A
Aroclor 1242	ND		ug/l	0.250	--	1	A
Aroclor 1248	ND		ug/l	0.250	--	1	A
Aroclor 1254	ND		ug/l	0.250	--	1	A
Aroclor 1260	ND		ug/l	0.250	--	1	A
Aroclor 1262	ND		ug/l	0.250	--	1	A
Aroclor 1268	ND		ug/l	0.250	--	1	A

Surrogate	% Recovery	Qualifier	Acceptance Criteria	Column
2,4,5,6-Tetrachloro-m-xylene	53		30-150	A
Decachlorobiphenyl	69		30-150	A
2,4,5,6-Tetrachloro-m-xylene	56		30-150	B
Decachlorobiphenyl	68		30-150	B

Project Name: NBHS IRA PSWS

Project Number: 115058

Lab Number: L1323309

Report Date: 12/03/13

Method Blank Analysis
Batch Quality Control

Analytical Method: 97,8082A
Analytical Date: 11/30/13 01:04
Analyst: TQ

Extraction Method: EPA 3510C
Extraction Date: 11/27/13 19:37
Cleanup Method1: EPA 3665A
Cleanup Date1: 11/29/13
Cleanup Method2: EPA 3660B
Cleanup Date2: 11/29/13

Parameter	Result	Qualifier	Units	RL	MDL	Column
MCP Polychlorinated Biphenyls - Westborough Lab for sample(s): 01-04 Batch: WG655074-1						
Aroclor 1016	ND		ug/l	0.250	--	A
Aroclor 1221	ND		ug/l	0.250	--	A
Aroclor 1232	ND		ug/l	0.250	--	A
Aroclor 1242	ND		ug/l	0.250	--	A
Aroclor 1248	ND		ug/l	0.250	--	A
Aroclor 1254	ND		ug/l	0.250	--	A
Aroclor 1260	ND		ug/l	0.250	--	A
Aroclor 1262	ND		ug/l	0.250	--	A
Aroclor 1268	ND		ug/l	0.250	--	A

Surrogate	%Recovery	Qualifier	Acceptance Criteria	Column
2,4,5,6-Tetrachloro-m-xylene	58		30-150	A
Decachlorobiphenyl	71		30-150	A
2,4,5,6-Tetrachloro-m-xylene	59		30-150	B
Decachlorobiphenyl	69		30-150	B

Lab Control Sample Analysis
Batch Quality Control

Project Name: NBHS IRA PSWS
Project Number: 115058

Lab Number: L1323309
Report Date: 12/03/13

Parameter	LCS %Recovery	Qual	LCSD %Recovery	Qual	%Recovery Limits	RPD	Qual	RPD Limits	Column
MCP Polychlorinated Biphenyls - Westborough Lab Associated sample(s): 01-04 Batch: WG655074-2 WG655074-3									
Aroclor 1016	74		73		40-140	2		20	A
Aroclor 1260	77		76		40-140	2		20	A

Surrogate	LCS %Recovery	Qual	LCSD %Recovery	Qual	Acceptance Criteria	Column
2,4,5,6-Tetrachloro-m-xylene	65		62		30-150	A
Decachlorobiphenyl	78		75		30-150	A
2,4,5,6-Tetrachloro-m-xylene	68		61		30-150	B
Decachlorobiphenyl	77		74		30-150	B

Project Name: NBHS IRA PSWS
Project Number: 115058

Lab Number: L1323309
Report Date: 12/03/13

Sample Receipt and Container Information

Were project specific reporting limits specified? YES

Reagent H2O Preserved Vials Frozen on: NA

Cooler Information Custody Seal

Cooler	
A	Absent

Container Information

Container ID	Container Type	Cooler	pH	Temp deg C	Pres	Seal	Analysis(*)
L1323309-01A	Vial HCl preserved	A	N/A	2.8	Y	Absent	MCP-8260-10(14)
L1323309-01B	Vial HCl preserved	A	N/A	2.8	Y	Absent	MCP-8260-10(14)
L1323309-01C	Vial HCl preserved	A	N/A	2.8	Y	Absent	MCP-8260-10(14)
L1323309-01D	Amber 1000ml unpreserved	A	7	2.8	Y	Absent	MCP-8082-10(365)
L1323309-01E	Amber 1000ml unpreserved	A	7	2.8	Y	Absent	MCP-8082-10(365)
L1323309-01F	Amber 1000ml unpreserved	A	7	2.8	Y	Absent	TPH-DRO-D(7)
L1323309-01G	Amber 1000ml unpreserved	A	77	2.8	Y	Absent	TPH-DRO-D(7)
L1323309-02A	Amber 1000ml unpreserved	A	7	2.8	Y	Absent	FILTER()
L1323309-02B	Amber 1000ml unpreserved	A	7	2.8	Y	Absent	FILTER()
L1323309-02C	Amber 1000ml unpreserved	A	7	2.8	Y	Absent	FILTER()
L1323309-02D	Amber 1000ml unpreserved	A	7	2.8	Y	Absent	FILTER()
L1323309-02W	Amber 1000ml unpreserved split	A	N/A	2.8	Y	Absent	MCP-8082-10(365)
L1323309-02X	Amber 1000ml unpreserved split	A	N/A	2.8	Y	Absent	MCP-8082-10(365)
L1323309-02Y	Amber 1000ml unpreserved split	A	N/A	2.8	Y	Absent	TPH-DRO-D(7)
L1323309-02Z	Amber 1000ml unpreserved split	A	N/A	2.8	Y	Absent	TPH-DRO-D(7)
L1323309-03A	Amber 1000ml unpreserved	A	7	2.8	Y	Absent	MCP-8082-10(365)
L1323309-03B	Amber 1000ml unpreserved	A	7	2.8	Y	Absent	MCP-8082-10(365)
L1323309-04A	Vial HCl preserved	A	N/A	2.8	Y	Absent	MCP-8260-10(14)
L1323309-04B	Vial HCl preserved	A	N/A	2.8	Y	Absent	MCP-8260-10(14)
L1323309-04C	Vial HCl preserved	A	N/A	2.8	Y	Absent	MCP-8260-10(14)
L1323309-04D	Amber 1000ml unpreserved	A	7	2.8	Y	Absent	MCP-8082-10(365)
L1323309-04E	Amber 1000ml unpreserved	A	7	2.8	Y	Absent	MCP-8082-10(365)
L1323309-05A	Vial HCl preserved	A	N/A	2.8	Y	Absent	MCP-8260-10(14)

Container Comments

L1323309-01D

*Values in parentheses indicate holding time in days

Project Name: NBHS IRA PSWS
Project Number: 115058

Lab Number: L1323309
Report Date: 12/03/13

Container Information

Container ID	Container Type	Cooler	pH	Temp deg C	Pres	Seal	Analysis(*)

Container Comments

L1323309-02W

*Values in parentheses indicate holding time in days

Project Name:	NBHS IRA PSWS	**Lab Number:**	L1323309
Project Number:	115058	**Report Date:**	12/03/13

GLOSSARY

Acronyms

EDL	- Estimated Detection Limit: This value represents the level to which target analyte concentrations are reported as estimated values, when those target analyte concentrations are quantified below the reporting limit (RL). The EDL includes any adjustments from dilutions, concentrations or moisture content, where applicable. The use of EDLs is specific to the analysis of PAHs using Solid-Phase Microextraction (SPME).
EPA	- Environmental Protection Agency.
LCS	- Laboratory Control Sample: A sample matrix, free from the analytes of interest, spiked with verified known amounts of analytes or a material containing known and verified amounts of analytes.
LCSD	- Laboratory Control Sample Duplicate: Refer to LCS.
LFB	- Laboratory Fortified Blank: A sample matrix, free from the analytes of interest, spiked with verified known amounts of analytes or a material containing known and verified amounts of analytes.
MDL	- Method Detection Limit: This value represents the level to which target analyte concentrations are reported as estimated values, when those target analyte concentrations are quantified below the reporting limit (RL). The MDL includes any adjustments from dilutions, concentrations or moisture content, where applicable.
MS	- Matrix Spike Sample: A sample prepared by adding a known mass of target analyte to a specified amount of matrix sample for which an independent estimate of target analyte concentration is available.
MSD	- Matrix Spike Sample Duplicate: Refer to MS.
NA	- Not Applicable.
NC	- Not Calculated: Term is utilized when one or more of the results utilized in the calculation are non-detect at the parameter's reporting unit.
NI	- Not Ignitable.
RL	- Reporting Limit: The value at which an instrument can accurately measure an analyte at a specific concentration. The RL includes any adjustments from dilutions, concentrations or moisture content, where applicable.
RPD	- Relative Percent Difference: The results from matrix and/or matrix spike duplicates are primarily designed to assess the precision of analytical results in a given matrix and are expressed as relative percent difference (RPD). Values which are less than five times the reporting limit for any individual parameter are evaluated by utilizing the absolute difference between the values; although the RPD value will be provided in the report.
SRM	- Standard Reference Material: A reference sample of a known or certified value that is of the same or similar matrix as the associated field samples.

Footnotes

1	- The reference for this analyte should be considered modified since this analyte is absent from the target analyte list of the original method.

Terms

Analytical Method: Both the document from which the method originates and the analytical reference method. (Example: EPA 8260B is shown as 1,8260B.) The codes for the reference method documents are provided in the References section of the Addendum.

Data Qualifiers

A	- Spectra identified as "Aldol Condensation Product".
B	- The analyte was detected above the reporting limit in the associated method blank. Flag only applies to associated field samples that have detectable concentrations of the analyte at less than ten times (10x) the concentration found in the blank. For MCP-related projects, flag only applies to associated field samples that have detectable concentrations of the analyte at less than ten times (10x) the concentration found in the blank. For DOD-related projects, flag only applies to associated field samples that have detectable concentrations of the analyte at less than ten times (10x) the concentration found in the blank AND the analyte was detected above one-half the reporting limit (or above the reporting limit for common lab contaminants) in the associated method blank. For NJ-Air-related projects, flag only applies to associated field samples that have detectable concentrations of the analyte above the reporting limit.
C	- Co-elution: The target analyte co-elutes with a known lab standard (i.e. surrogate, internal standards, etc.) for co-extracted analyses.
D	- Concentration of analyte was quantified from diluted analysis. Flag only applies to field samples that have detectable concentrations of the analyte.
E	- Concentration of analyte exceeds the range of the calibration curve and/or linear range of the instrument.
G	- The concentration may be biased high due to matrix interferences (i.e, co-elution) with non-target compound(s). The result should be considered estimated.
H	- The analysis of pH was performed beyond the regulatory-required holding time of 15 minutes from the time of sample collection.
I	- The lower value for the two columns has been reported due to obvious interference.

Report Format: Data Usability Report

Project Name:	NBHS IRA PSWS	**Lab Number:**	L1323309
Project Number:	115058	**Report Date:**	12/03/13

Data Qualifiers

M - Reporting Limit (RL) exceeds the MCP CAM Reporting Limit for this analyte.

NJ - Presumptive evidence of compound. This represents an estimated concentration for Tentatively Identified Compounds (TICs), where the identification is based on a mass spectral library search.

P - The RPD between the results for the two columns exceeds the method-specified criteria.

Q - The quality control sample exceeds the associated acceptance criteria. For DOD-related projects, LCS and/or Continuing Calibration Standard exceedences are also qualified on all associated sample results. Note: This flag is not applicable for matrix spike recoveries when the sample concentration is greater than 4x the spike added or for batch duplicate RPD when the sample concentrations are less than 5x the RL. (Metals only.)

R - Analytical results are from sample re-analysis.

RE - Analytical results are from sample re-extraction.

S - Analytical results are from modified screening analysis.

Report Format: Data Usability Report

Project Name:	NBHS IRA PSWS	**Lab Number:**	L1323309
Project Number:	115058	**Report Date:**	12/03/13

REFERENCES

1 Test Methods for Evaluating Solid Waste: Physical/Chemical Methods. EPA SW-846. Third Edition. Updates I - IV, 2007.

97 EPA Test Methods (SW-846) with QC Requirements & Performance Standards for the Analysis of EPA SW-846 Methods under the Massachusetts Contingency Plan, WSC-CAM-IIA, IIB, IIIA, IIIB, IIIC, IIID, VA, VB, VC, VIA, VIB, VIIIA and VIIIB, July 2010.

LIMITATION OF LIABILITIES

Alpha Analytical performs services with reasonable care and diligence normal to the analytical testing laboratory industry. In the event of an error, the sole and exclusive responsibility of Alpha Analytical shall be to re-perform the work at it's own expense. In no event shall Alpha Analytical be held liable for any incidental, consequential or special damages, including but not limited to, damages in any way connected with the use of, interpretation of, information or analysis provided by Alpha Analytical.

We strongly urge our clients to comply with EPA protocol regarding sample volume, preservation, cooling, containers, sampling procedures, holding time and splitting of samples in the field.

Certificate/Approval Program Summary

Last revised November 12, 2013 - Westboro Facility

The following list includes only those analytes/methods for which certification/approval is currently held.
For a complete listing of analytes for the referenced methods, please contact your Alpha Customer Service Representative.

Connecticut Department of Public Health Certificate/Lab ID: PH-0574. ***NELAP Accredited Solid Waste/Soil.***

Drinking Water (Inorganic Parameters: Color, pH, Turbidity, Conductivity, Alkalinity, Chloride, Free Residual Chlorine, Fluoride, Calcium Hardness, Sulfate, Nitrate, Nitrite, Aluminum, Antimony, Arsenic, Barium, Beryllium, Cadmium, Calcium, Chromium, Copper, Iron, Lead, Magnesium, Manganese, Mercury, Nickel, Selenium, Silver, Sodium, Thallium, Zinc, Total Dissolved Solids, Total Organic Carbon, Total Cyanide, Perchlorate. Organic Parameters: Volatile Organics 524.2, Total Trihalomethanes 524.2, 1,2-Dibromo-3-chloropropane (DBCP) 504.1, Ethylene Dibromide (EDB) 504.1, 1,4-Dioxane (Mod 8270). Microbiology Parameters: Total Coliform-MF mEndo (SM9222B), Total Coliform – Colilert (SM9223, Enumeration and P/A), E. Coli. – Colilert (SM9223, Enumeration and P/A), HPC – Pour Plate (SM9215B), Fecal Coliform – MF m-FC (SM9222D), Fecal Coliform-EC Medium (SM 9221E).

Wastewater/Non-Potable Water (Inorganic Parameters: Color, pH, Conductivity, Acidity, Alkalinity, Chloride, Total Residual Chlorine, Fluoride, Total Hardness, Silica, Sulfate, Sulfide, Ammonia, Kjeldahl Nitrogen, Nitrate, Nitrite, O-Phosphate, Total Phosphorus, Aluminum, Antimony, Arsenic, Barium, Beryllium, Boron, Cadmium, Calcium, Chromium, Hexavalent Chromium, Cobalt, Copper, Iron, Lead, Magnesium, Manganese, Mercury, Molybdenum, Nickel, Potassium, Selenium, Silver, Sodium, Strontium, Thallium, Tin, Titanium, Vanadium, Zinc, Total Residue (Solids), Total Dissolved Solids, Total Suspended Solids (non-filterable), BOD, CBOD, COD, TOC, Total Cyanide, Phenolics, Foaming Agents (MBAS), Bromide, Oil and Grease. Organic Parameters: PCBs, Organochlorine Pesticides, Technical Chlordane, Toxaphene, Acid Extractables (Phenols), Benzidines, Phthalate Esters, Nitrosamines, Nitroaromatics & Isophorone, Polynuclear Aromatic Hydrocarbons, Haloethers, Chlorinated Hydrocarbons, Volatile Organics, TPH (HEM/SGT), CT-Extractable Petroleum Hydrocarbons (ETPH), MA-EPH, MA-VPH. Microbiology Parameters: Total Coliform – MF mEndo (SM9222B), Total Coliform – MTF (SM9221B), E. Coli – Colilert (SM9223 Enumeration), HPC – Pour Plate (SM9215B), Fecal Coliform – MF m-FC (SM9222D), Fecal Coliform – A-1 Broth (SM9221E), Enterococcus - Enterolert.

Solid Waste/Soil (Inorganic Parameters: pH, Sulfide, Aluminum, Antimony, Arsenic, Barium, Beryllium, Boron, Cadmium, Calcium, Chromium, Hexavalent Chromium, Cobalt, Copper, Iron, Lead, Magnesium, Manganese, Mercury, Molybdenum, Nickel, Potassium, Selenium, Silver, Sodium, Thallium, Tin, Vanadium, Zinc, Total Cyanide, Ignitability, Phenolics, Corrosivity, TCLP Leach (1311), SPLP Leach (1312 metals only), Reactivity. Organic Parameters: PCBs, PCBs in Oil, Organochlorine Pesticides, Technical Chlordane, Toxaphene, CT-Extractable Petroleum Hydrocarbons (ETPH), MA-EPH, MA-VPH, Dicamba, 2,4-D, 2,4,5-T, 2,4,5-TP(Silvex), Dalapon, Volatile Organics (SW 8260), Acid Extractables (Phenols) (SW 8270), Benzidines (SW 8270), Phthalates (SW 8270), Nitrosamines (SW 8270), Nitroaromatics & Cyclic Ketones (SW 8270), PAHs (SW 8270), Haloethers (SW 8270), Chlorinated Hydrocarbons (SW 8270).)

State of Illinois Certificate/Lab ID: 003155. ***NELAP Accredited.***
Drinking Water (Inorganic Parameters: SM2120B, 2320B, 2510B, 2540C, SM4500CN-CE, 4500F-C, 4500H-B, 4500NO3-F, 5310C, EPA 200.7, 200.8, 245.1, 300.0. Organic Parameters: EPA 504.1, 524.2.)

Wastewater/Non-Potable Water (Inorganic Parameters: SM2120B, 2310B, 2320B, 2340B, 2510B, 2540B, 2540C, 2540D, SM4500CL-E, 4500CN-E, 4500F-C, 4500H-B, 4500NH3-H, 4500NO2-B, 4500NO3-F, 4500P-E, 4500S-D, 4500SO3-B, 5210B, 5220D, 5310C, 5540C, EPA 120.1, 1664A, 200.7, 200.8, 245.1, 300.0, 350.1, 351.1, 353.2, 410.4, 420.1. Organic Parameters: EPA 608, 624, 625.)

Hazardous and Solid Waste (Inorganic Parameters: EPA 1010A, 1030, 1311, 1312, 6010C, 6020A, 7196A, 7470A, 7471B, 9012B, 9014, 9038, 9040C, 9045D, 9050A, 9065, 9251. Organic Parameters: 8011 (NPW only), 8015C, 8081B, 8082A, 8151A, 8260C, 8270D, 8315A, 8330.)

Maine Department of Human Services Certificate/Lab ID: 2009024.
Drinking Water (Inorganic Parameters: SM9215B, 9222D, 9223B, EPA 180.1, 353.2, SM2120B, 2130B, 2320B, 2510C, 2540C, 4500Cl-D, 4500CN-C, 4500CN-E, 4500F-C, 4500H+B, 4500NO3-F, 5310C, EPA 200.7, EPA 200.8, 245.1, EPA 300.0. Organic Parameters: 504.1, 524.2.)

Wastewater/Non-Potable Water (Inorganic Parameters: EPA 120.1, 1664A, 300.0, 350.1, 351.1, 353.2, 410.4, 420.1, 8315A, 9010C, SM2120B, 2310B, 2320B, 2510B, 2540B, 2540C, 2540D, 426C, 4500Cl-E, 4500CN-C, 4500CN-E, 4500F-B, 4500F-C, 4500H+B, 4500Norg-C, 4500NH3-B, 4500NH3-H, 4500NO2-B, 4500NO3-F, 4500P-B, 4500P-E, 4500S2-D, 4500SO3-B, 5540C, 5210B, 5220D, 5310C, 9010B, 9030B, 9040C, 7470A, 7196A, 2340B, EPA 200.7, 6010C, 200.8, 6020A, 245.1, 1311, 1312, 3005A, Enterolert, 9223B, 9222D. Organic Parameters: 608, 624, 625, 8011, 8081B, 8082A, 8330, 8151A, 8260C, 8270D, 3510C, 3630C, 5030B, ME-DRO, ME-GRO, MA-EPH, MA-VPH.)

Solid Waste/Soil (Inorganic Parameters: 9010B, 9012A, 9014, 9040B, 9045C, 6010C, 6020A, 7471B, 7196A, 9050A, 1010, 1030, 9065, 1311, 1312, 3005A, 3050B, 9038, 9251. Organic Parameters: ME-DRO, ME-GRO, MA-EPH, MA-VPH, 8260C, 8270D, 8330, 8151A, 8081B, 8082A, 3540C, 3546, 3580A, 3620C, 3630C, 5030B, 5035.)

Massachusetts Department of Environmental Protection Certificate/Lab ID: M-MA086.
*Drinking Water (*Inorganic Parameters: (EPA 200.8 for: Sb,As,Ba,Be,Cd,Cr,Cu,Pb,Ni,Se,Tl) (EPA 200.7 for: Ba,Be,Ca,Cd,Cr,Cu,Na,Ni) 245.1, (300.0 for: Nitrate-N, Fluoride, Sulfate); (EPA 353.2 for: Nitrate-N, Nitrite-N); (SM4500NO3-F for: Nitrate-N and Nitrite-N); 4500F-C, 4500CN-CE, EPA 180.1, SM2130B, SM4500Cl-D, 2320B, SM2540C, SM4500H-B. Organic Parameters: (EPA 524.2 for: Trihalomethanes, Volatile Organics); (504.1 for: 1,2-Dibromoethane, 1,2-Dibromo-3-Chloropropane), EPA 332. Microbiology Parameters: SM9215B; ENZ. SUB. SM9223; ColilertQT SM9223B; MF-SM9222D.)

*Non-Potable Water (*Inorganic Parameters:, (EPA 200.8 for: Al,Sb,As,Be,Cd,Cr,Cu,Pb,Mn,Ni,Se,Ag,Tl,Zn); (EPA 200.7 for: Al,Sb,As,Be,Cd,Ca,Cr,Co,Cu,Fe,Pb,Mg,Mn,Mo,Ni,K,Se,Ag,Na,Sr,Ti,Tl,V,Zn); 245.1, SM4500H,B, EPA 120.1, SM2510B, 2540C, 2340B, 2320B, 4500CL-E, 4500F-BC, 426C, SM4500NH3-BH, (EPA 350.1 for: Ammonia-N), LACHAT 10-107-06-1-B for Ammonia-N, SM4500NO3-F, 353.2 for Nitrate-N, SM4500NH3-BC-NES, EPA 351.1, SM4500P-E, 4500P-B,E, 5220D, EPA 410.4, SM 5210B, 5310C, 4500CL-D, EPA 1664, SM14 510AC, EPA 420.1, SM4500-CN-CE, SM2540D.
Organic Parameters: (EPA 624 for Volatile Halocarbons, Volatile Aromatics),(608 for: Chlordane, Toxaphene, Aldrin, alpha-BHC, beta-BHC, gamma-BHC, delta-BHC, Dieldrin, DDD, DDE, DDT,Endosulfan I, Endosulfan II, Endosulfan sulfate, Endrin, Endrin Aldehyde, Heptachlor, Heptachlor Epoxide, PCBs-Water), (EPA 625 for SVOC Acid Extractables and SVOC Base/Neutral Extractables), 600/4-81-045-PCB-Oil. Microbiology Parameters: (ColilertQT SM9223B; Enterolert-QT: SM9222D-MF.)

New Hampshire Department of Environmental Services Certificate/Lab ID: 200307. ***NELAP Accredited.***
Drinking Water (Inorganic Parameters: SM 9222B, 9223B, 9215B, EPA 200.7, 200.8, 300.0, SM4500CN-E, 4500H+B, 4500NO3-F, 2320B, 2510B, 2540C, 4500F-C, 5310C, 2120B, EPA 332.0. Organic Parameters: 504.1, 524.2.)

Non-Potable Water (Inorganic Parameters: SM9222D, 9221B, 9222B, 9221E-EC, EPA 3005A, 200.7, 200.8, 245.1, SW-846 6010C, 6020A, 7196A, 7470A, SM3500-CR-D, EPA 120.1, 300.0, 350.1, 350.2, 351.1, 353.2, 410.4, 420.1, 426C, 1664A, SW-846 9010B, 9010C, 9030, 9040B, 9040C, SM2120B, 2310B, 2320B, 2340B, 2540B, 2540D, 4500H+B, 4500CL-E, 4500CN-E, 4500NH3-H, 4500NO3-F, 4500NO2-B, 4500P-E, 4500-S2-D, 4500SO3-B, 5210B, 5220D, 2510B, 2540C, 4500F-C, 5310C, 5540C, LACHAT 10-204-00-1-A, LACHAT 10-107-06-2-D, 3060A. Organic Parameters: SW-846 3510C, 3630C, 5030B, 8260C, 8270D, 8330, EPA 624, 625, 608, SW-846 8082A, 8081B, 8015C, 8151A, 8330, 8270D-SIM.)

Solid & Chemical Materials (Inorganic Parameters: SW-846 6010C, 6020A, 7196A, 7471B, 1010, 1010A, 1030, 9010C, 9012B, 9014, 9030B, 9040C, 9045C, 9045D, 9050, 9065, 9251, 1311, 1312, 3005A, 3050B, 3060A. Organic Parameters: SW-846 3540C, 3546, 3050B, 3580A, 3620D, 3630C, 5030B, 5035, 8260C, 8270D, 8270D-SIM, 8330, 8151A, 8015B, 8015C, 8082A, 8081B.)

New Hampshire Department of Environmental Services Certificate/Lab ID: 2064. ***NELAP Accredited.***
Drinking Water (Organic Parameters: **EPA 524.2:** Di-isopropyl ether (DIPE), Ethyl-t-butyl ether (ETBE), Tert-amyl methyl ether (TAME)).

Non-Potable Water (Organic Parameters: **EPA 8260C:** 1,3,5-Trichlorobenzene. **EPA 8015C(M):** TPH.)

Solid & Chemical Materials (Organic Parameters: **EPA 8260C:** 1,3,5-Trichlorobenzene.)

New Jersey Department of Environmental Protection Certificate/Lab ID: MA935. ***NELAP Accredited.***
Drinking Water (Inorganic Parameters: SM9222B, 9221E, 9223B, 9215B, 4500CN-CE, 4500NO3-F, 4500F-C, EPA 300.0, 200.7, 200.8, 245.1, 2540C, SM2120B, 2320B, 2510B, 5310C, SM4500H-B. Organic Parameters: EPA 332, 504.1, 524.2.)

Non-Potable Water (Inorganic Parameters: SM5210B, EPA 410.4, SM5220D, 4500Cl-E, EPA 300.0, SM2120B, 2340B, SM4500F-BC, EPA 200.7, 200.8, 351.1, LACHAT 10-107-06-2-D, EPA 353.2, SM4500NO3-F, 4500NO2-B, EPA 1664A, SM5310C, 4500-PE, EPA 420.1, SM4500P-B5+E, 2540B, 2540C, 2540D, EPA 120.1, SM2510B, 9222D, 9221B, 9221C, 9221E, 9222B, 9215B, 2310B, 2320B, 4500NH3-H, 4500-S D, 4500SO4-E, EPA 350.1, 350.2, SW-846 1312, 7470A, 5540C, SM4500H-B, 4500SO3-B, SM3500Cr-D, 4500CN-CE, EPA 245.1, SW-846 9040B, 9040C, 3005A, 3015, EPA 6010B, 6010C, 6020, 6020A, 7196A, 3060A, SW-846 9010C, 9030B. Organic Parameters: SW-846 8260B, 8260C, 8270C, 8270D, 8270C-SIM, 8270D-SIM, 3510C, EPA 608, 624, 625, SW-846 3630C, 5030B, 5030C, 8011, 8015C, 8081A, 8081B, 8082, 8082A, 8151A, 8330, 1,4-Dioxane by NJ Modified 8270, 8015B, NJ EPH.)

Solid & Chemical Materials (Inorganic Parameters: SW-846, 6010B, 6010C, 6020, 6020A, 7196A, 3060A, 9030B, 1010, 1010A, 1030, 1311, 1312, 3005A, 3050B, 7471A, 7471B, 9010C, 9012B, 9014, 9038, 9040B, 9040C, 9045C, 9045D,

9050A, 9065, 9251. Organic Parameters: SW-846 8015B, 8015C, 8081A, 8081B, 8082, 8082A, 8151A, 8330, 8260B, 8260C, 8270C, 8270D, 8270C-SIM, 8270D-SIM, 3540C, 3546, 3580A, 3620C, 3630C, 5030B, 5030C, 5035L, 5035H, NJ EPH.)

New York Department of Health Certificate/Lab ID: 11148. ***NELAP Accredited.***
Drinking Water (Inorganic Parameters: SM9223B, 9222B, 9215B, EPA 200.8, 200.7, 245.1, SM5310C, EPA 332.0, SM2320B, EPA 300.0, SM2120B, 4500CN-E, 4500F-C, 4500NO3-F, 2540C, SM 2510B. Organic Parameters: EPA 524.2, 504.1.)

Non-Potable Water (Inorganic Parameters: SM9221E, 9222D, 9221B, 9222B, 9215B, 5210B, 5310C, EPA 410.4, SM5220D, 2310B, 2320B, EPA 200.7, 300.0, SM4500CL-E, 4500F-C, SM15 426C, EPA 350.1, SM4500NH3-BH, EPA 351.1, LACHAT 10-107-06-2, EPA 353.2, SM4500-NO3-F, 4500-NO2-B, 4500P-E, 2340B, 2540C, 2540B, 2540D, EPA 200.8, EPA 6010C, 6020A, EPA 7196A, SM3500Cr-D, EPA 245.1, 7470A, SM2120B, 4500CN-CE, EPA 1664A, EPA 420.1, SM14 510C, EPA 120.1, SM2510B, SM4500S-D, SM5540C, EPA 8315A, 3005A, 9010C, 9030B. Organic Parameters: EPA 624, 8260C, 8270D, 8270D-SIM, 625, 608, 8081B, 8151A, 8330A, 8082A, EPA 3510C, 5030B, 5030C, 8015C, 8011.)

Solid & Hazardous Waste (Inorganic Parameters: EPA 1010A, 1030, EPA 6010C, 6020A, 7196A, 7471B, 8315A, 9012B, 9014, 9065, 9050A, 9038, 9251, EPA 1311, 1312, 3005A, 3050B, 9010C, 9030B, 9040C, 9045D. Organic Parameters: EPA 8260C, 8270D, 8270D-SIM, 8015C, 8081B, 8151A, 8330A, 8082A, 3540C, 3546, 3580A, 5035A-H, 5035A-L.)

North Carolina Department of the Environment and Natural Resources Certificate/Lab ID : 666. (Inorganic Parameters: SM2310B, 2320B, 4500Cl-E, 4500Cn-E, 9012B, 9014, Lachat 10-204-00-1-X, 1010A, 1030, 4500NO3-F, 353.2, 4500P-E, 4500SO4-E, 300.0, 4500S-D, 5310B, 5310C, 6010C, 6020A, 200.7, 200.8, 3500Cr-B, 7196A, 245.1, 7470A, 7471B, 1311,1312. Organic Parameters: 608, 8081B, 8082A, 624, 8260B, 625, 8270D, 8151A, 8015C, 504.1, MA-EPH, MA-VPH.)

Drinking Water Program Certificate/Lab ID: 25700. (Inorganic Parameters: Chloride EPA 300.0. Organic Parameters: 524.2)

Pennsylvania Department of Environmental Protection Certificate/Lab ID : 68-03671. ***NELAP Accredited.***
Drinking Water (Inorganic Parameters: 200.7, 200.8, 300.0, 332.0, 2120B, 2320B, 2510B, 2540C, 4500-CN-CE, 4500F-C, 4500H+-B, 4500NO3-F, 5310C. Organic Parameters: EPA 524.2, 504.1)

Non-Potable Water (Inorganic Parameters: EPA 120.1, 1312, 3005A,3015, 3060A, 200.7, 200.8, 410.4, 1664A, SM2540D, 5210B, 5220D, 4500-P,BE, 245.1, 300.0, 350.1, 350.2, 351.1, 353.2, 420.1, 6010C, 6020A, 7196A, 7470A, 9030B, 2120B, 2310B, 2320B, 2510B, 2540B, 2540C, 3500Cr-D, 426C, 4500CN-CE, 4500Cl-E, 4500F-B, 4500F-C, 4500H+-B, 4500NH3-H, 4500NO2-B, 4500NO3-F, 4500S-D, 4500SO3-B, 5310BCD, 5540C, 9010C, 9040C. Organic Parameters: EPA 3510C, 3630C, 5030B, 625, 624, 608, 8081B, 8082A, 8151A, 8260C, 8270D, 8270D-SIM, 8330, 8015C, NJ-EPH.)

Solid & Hazardous Waste (Inorganic Parameters: EPA 350.1, 1010, 1030, 1311, 1312, 3005A, 3050B, 3060A, 6010C, 6020A, 7196A, 7471B, 9010C, 9012B, 9014, 9040B, 9045D, 9050A, 9065, SM 4500NH3-BH, 9030B, 9038, 9251. Organic Parameters: 3540C, 3546, 3580A, 3620C, 3630C, 5035, 8015C, 8081B, 8082A, 8151A, 8260C, 8270D, 8270D-SIM, 8330, NJ-EPH.)

Rhode Island Department of Health Certificate/Lab ID: LAO00065. ***NELAP Accredited via NJ-DEP.***
Refer to MA-DEP Certificate for Potable and Non-Potable Water.
Refer to NJ-DEP Certificate for Potable and Non-Potable Water.

Texas Commisson on Environmental Quality Certificate/Lab ID: T104704476. ***NELAP Accredited.***
Non-Potable Water (Inorganic Parameters: EPA 120.1, 1664, 200.7, 200.8, 245.1, 245.2, 300.0, 350.1, 351.1, 353.2, 410.4, 420.1, 6010, 6020, 7196, 7470, 9040, SM 2120B, 2310B, 2320B, 2510B, 2540B, 2540C, 2540D, 426C, 4500CL-E, 4500CN-E, 4500F-C, 4500H+B, 4500NH3-H, 4500NO2B, 4500P-E, 4500 S^{2-}D, 510C, 5210B, 5220D, 5310C, 5540C. Organic Parameters: EPA 608, 624, 625, 8081, 8082, 8151, 8260, 8270, 8330.)

Solid & Hazardous Waste (Inorganic Parameters: EPA 1311, 1312, 9012, 9014, 9040, 9045, 9050, 9065.)

Virginia Division of Consolidated Laboratory Services Certificate/Lab ID: 460195. ***NELAP Accredited.***
Drinking Water (Inorganic Parameters: EPA 200.7, 200.8, 300.0, 2510B, 2120B, 2540C, 4500CN-CE, 245.1, 2320B, 4500F-C, 4500NO3-F, 4500H+B, 5310C. Organic Parameters: EPA 504.1, 524.2.)

Non-Potable Water (Inorganic Parameters: EPA 120.1, 1664A, 200.7, 200.8, 245.1, 300.0, 350.1, 351.1, 351.2, 3005A, 3015, 1312, 6010B, 6010C, 3060A, 353.2, 420.1, 2340B, 6020, 6020A, SM4500S-D, SM4500-CN-CE, Lachat 10-204-00-1-X, 7196A, 7470A, 2310B, 2320B, 2510B, 2540B, 2540C, 2540D, 3500Cr-D, 426C, 4500Cl-E, 4500F-B, 4500F-C,

4500NH3-H, 4500NO2-B, 4500NO3-F, 4500 SO3-B, 4500H-B, 4500PE, 510AC, 5210B, 5310B 5310C, 5540C, 9010Cm 9030B, 9040C. Organic Parameters: EPA 3510C, 3630C, 5030B, 8260B, 608, 624, 625, 8011, 8015C, 8081A, 8081B, 8082, 8082A, 8151A, 8260C, 8270C, 8270D, 8270C-SIM, 8270D-SIM, 8330,)

Solid & Hazardous Waste (Inorganic Parameters: EPA 1010A, 1030, 3060A, 3050B, 1311, 1312, 6010B, 6010C, 6020, , 7196A, 7471A, 7471B, 6020A, 9010C, 9012B, 9030B, 9014, 9038, 9040C, 9045D, 9251, 9050A, 9065. Organic Parameters: EPA 5030B, 5035, 3540C, 3546, 3550B, 3580A, 3620C, 3630C, 6020A, 8260B, 8260C, 8015B, 8015C, 8081A, 8081B, 8082, 8082A, 8151A, 8270C, 8270D, 8270C-SIM, 8270D-SIM, 8330.)

Department of Defense, L-A-B Certificate/Lab ID: L2217.
Drinking Water (Inorganic Parameters: SM 4500H-B. Organic Parameters: EPA 524.2, 504.1.)

Non-Potable Water (Inorganic Parameters: EPA 200.7, 200.8, 6010C, 6020A, 245.1, 7470A, 9040B, 9010B, 180.1, 300.0, 332.0, 6860, 351.1, 353.2, 9060, 1664A, SM 4500CN-E, 4500H-B, 4500Norg-C, 4500NO3-F, 5310C, 2130B, 2320B, 2340B, 2540C, 5540C, 3005A, 3015, 9056, 7196A, 3500-Cr-D. Organic Parameters: EPA 8015C, 8151A, 8260C, 8270D, 8270D-SIM, 8330A, 8082A, 8081B, 3510C, 5030B, MassDEP EPH, MassDEP VPH.)

Solid & Hazardous Waste (Inorganic Parameters: EPA 200.7, 6010C, 6020A, 7471A, 6860, 1311, 1312, 3050B, 7196A, 9040B, 9045C, 9010C, 9012B, 9251, SM3500-CR-D, 4500CN-CE, 2540G, Organic Parameters: EPA 8015C, 8151A, 8260C, 8270D, 8270D-SIM, 8330A/B-prep, 8082A, 8081B, 3540C, 3546, 3580A, 5035A, MassDEP EPH, MassDEP VPH.)

The following analytes are not included in our current NELAP/TNI Scope of Accreditation:
EPA 524.2: Acetone, 2-Butanone (Methyl ethyl ketone (MEK)), Tert-butyl alcohol, 2-Hexanone, Tetrahydrofuran, 1,3,5-Trichlorobenzene, 4-Methyl-2-pentanone (MIBK), Carbon disulfide, Diethyl ether. **EPA 8260B:** 1,2,4,5-Tetramethylbenzene, 4-Ethyltoluene. **EPA 8260 Non-potable water matrix:** Iodomethane (methyl iodide), Methyl methacrylate. **EPA 8260 Soil matrix:** Tert-amyl methyl ether (TAME), Diisopropyl ether (DIPE), Azobenzene. **EPA 8330A:** PETN, Picric Acid, Nitroglycerine, 2,6-DANT, 2,4-DANT. **EPA 8270C:** Methyl naphthalene, Dimethyl naphthalene, Total Methylnapthalenes, Total Dimethylnaphthalenes, 1,4-Diphenylhydrazine. **EPA 625:** 4-Chloroaniline, 4-Methylphenol. Total Phosphorus in a soil matrix, TKN in a soil matrix, NO2 in a soil matrix, NO3 in a soil matrix. **EPA 9071:** Total Petroleum Hydrocarbons, Oil & Grease. **EPA 9060** in a soil matrix.

CHAIN OF CUSTODY

PAGE 1 OF 1

Date Rec'd In Lab: 11/15/13

ALPHA Job #: L1323309

8 Walkup Drive
Westboro, MA 01581
Tel: 508-898-9220

320 Forbes Blvd
Mansfield, MA 02048
Tel: 508-822-9300

Client Information

Client: TRC
Address: 650 Suffolk Street
Lowell, MA 01854
Phone: 978-970-5650
Email: aleonard@trsolutions.com
dsullivan

Project Information

Project Name: NBHS IRA PSWS
Project Location: New Bedford, MA
Project #: 115058
Project Manager: David Sullivan
ALPHA Quote #:

Turn-Around Time

☒ Standard ☐ RUSH (only confirmed if pre-approved!)

Date Due: 11/29/13

Report Information - Data Deliverables

☐ ADEx ☒ EMAIL

Billing Information

☐ Same as Client info PO #: C115058

Regulatory Requirements & Project Information Requirements

☐ Yes ☐ No MA MCP Analytical Methods ☐ Yes ☐ No CT RCP Analytical Methods
☐ Yes ☐ No Matrix Spike Required on this SDG? (Required for MCP Inorganics)
☐ Yes ☐ No GW1 Standards (Info Required for Metals & EPH with Targets)
☐ Yes ☐ No NPDES RGP
☐ Other State /Fed Program MA Criteria MCP

Additional Project Information:

*PCB + TPH to be filtered by lab using 0.2 µm filter.
TPH detection limits to be <200 ppb.

ANALYSIS: VOC: ☒ 8260 ☐ 624 ☐ 524.2; SVOC: ☐ ABN ☐ PAH; METALS: ☐ MCP 13 ☐ MCP 14 ☐ RCP 15; METALS: ☐ RCRA5 ☐ RCRA8 ☐ PP13; EPH: ☐ Ranges & Targets ☐ Ranges Only; VPH: ☐ Ranges & Targets ☐ Ranges Only; ☒ PCB ☐ PEST; TPH: ☒ Quant Only ☐ Fingerprint; PCB (0.2µm filtered)*; TPH (0.2µm filtered)*

SAMPLE INFO
Filtration: ☐ Field ☐ Lab to do
Preservation: ☐ Lab to do

ALPHA Lab ID (Lab Use Only)	Sample ID	Collection Date	Collection Time	Sample Matrix	Sampler Initials	VOC	SVOC	METALS	METALS	EPH	VPH	PCB	TPH	PCB	TPH				Sample Comments	TOTAL # BOTTLES
23309.1&2	INFLUENT	11/15/13	11:27	I	KDJ	X						X	X	X	X				TPH <200 ppb detection limit	11
.3	Intracarbon	11/15/13	11:40	X	KDJ							X								2
.4	EFFLUENT	11/15/13	11:50	E	KDJ	X						X								5
.5	TRIP BLANK					X														
Container Type						V						A	A	A	A					
Preservative						B						A	A	A	A					

Container Type
P= Plastic
A= Amber glass
V= Vial
G= Glass
B= Bacteria cup
C= Cube
O= Other
E= Encore
D= BOD Bottle

Preservative
A= None
B= HCl
C= HNO_3
D= H_2SO_4
E= NaOH
F= MeOH
G= $NaHSO_4$
H = $Na_2S_2O_3$
I= Ascorbic Acid
J = NH_4Cl
K= Zn Acetate
O= Other

Relinquished By:	Date/Time	Received By:	Date/Time
[signature]	11/15/13 1525	[signature]	11/15/13 15:25
[signature]	11/15/13 15:30	[signature]	11/15/13 15:30

All samples submitted are subject to Alpha's Terms and Conditions. See reverse side.

FORM NO: 01-01 (rev. 12-Mar-2012)

7A
Volatile Organics CONTINUING CALIBRATION CHECK

Lab Name: Alpha Analytical Labs

SDG No.: L1323309

Instrument ID: Jack.i Calibration Date: 26-NOV-2013 Time: 05:10

Lab File ID: 1126A02 Init. Calib. Date(s): 20-NOV-2 20-NOV-2

Sample No: wg654626-1,31,1 Init. Calib. Times : 03:27 06:44

Compound	RRF	RRF	MIN RRF	%D	MAX %D	
dichlorodifluoromethane	.53429	.52546	.1	-2	20	
chloromethane	.29525	.32161	.1	9	20	
vinyl chloride	.64519	.63331	.1	-2	20	
bromomethane	.39436	.28955	.1	-27	20	F
chloroethane	.40413	.38395	.1	-5	20	
trichlorofluoromethane	1.0026	.84379	.1	-16	20	
ethyl ether	.26975	.24238	.05	-10	20	
1,1,-dichloroethene	.56171	.51907	.1	-8	20	
carbon disulfide	1.4861	1.3722	.1	-8	20	
methylene chloride	.65003	.61904	.1	-5	20	
acetone	.139	.1512	.1	9	20	
trans-1,2-dichloroethene	.615	.5614	.1	-9	20	
methyl tert butyl ether	1.12	1.0303	.1	-8	20	
Diisopropyl Ether	1.6802	1.6569	.01	-1	20	
1,1-dichloroethane	1.0938	1.0633	.2	-3	20	
Ethyl-Tert-Butyl-Ether	1.2266	1.2548	.05	2	20	
cis-1,2-dichloroethene	.6216	.6668	.1	7	20	
2,2-dichloropropane	.77473	.83805	.05	8	20	
bromochloromethane	.29225	.30756	.05	5	20	
chloroform	1.0199	1.0914	.2	7	20	
carbontetrachloride	.73936	.80109	.1	8	20	
tetrahydrofuran	.10676	.10992	.05	3	20	
1,1,1-trichloroethane	.88954	.96682	.1	9	20	
1,1-dichloropropene	.74949	.78617	.05	5	20	
2-butanone	.14509	.16098	.1	11	20	
benzene	2.2873	2.3810	.5	4	20	
Tertiary-Amyl Methyl Ether	1.0508	1.0642	.05	1	20	
1,2-dichloroethane	.65044	.70568	.1	8	20	
trichloroethene	.56036	.5966	.2	6	20	
dibromomethane	.30066	.30674	.05	2	20	
1,2-dichloropropane	.51784	.54158	.1	5	20	
bromodichloromethane	.68543	.71726	.2	5	20	
1,4-dioxane	.0023	.00263	.05	14	20	F
2-chloroethylvinyl ether	.09675	.10049	.05	4	20	
cis-1,3-dichloropropene	.7656	.77466	.2	1	20	
toluene	1.8261	1.8591	.4	2	20	
tetrachloroethene	.76498	.80939	.2	6	20	
4-methyl-2-pentanone	.09821	.09642	.1	-2	20	F

FORM VII MCP-8260-10

7A
CONTINUING CALIBRATION CHECK

Lab Name: Alpha Analytical Labs

SDG No.: L1323309

Instrument ID: Jack.i Calibration Date: 26-NOV-2013 Time: 05:10

Lab File ID: 1126A02 Init. Calib. Date(s): 20-NOV-2 20-NOV-2

Sample No: wg654626-1,31,1 Init. Calib. Times : 03:27 06:44

Compound	$\overline{RRF}$	RRF	MIN RRF	%D	MAX %D
trans-1,3-dichloropropene	100	86.210	.1	-14	20
1,1,2-trichloroethane	.38048	.38655	.1	2	20
chlorodibromomethane	100	85.503	.1	-14	20
1,3-dichloropropane	.81942	.81292	.05	-1	20
1,2-dibromoethane	.484	.47431	.1	-2	20
2-hexanone	.22125	.22996	.1	4	20
chlorobenzene	2.0345	2.0700	.5	2	20
ethyl benzene	3.5172	3.6787	.1	5	20
1,1,1,2-tetrachloroethane	100	90.858	.05	-9	20
p/m xylene	1.4281	1.4695	.1	3	20
o xylene	1.3647	1.3996	.3	3	20
bromoform	100	91.621	.1	-8	20
styrene	2.2739	2.2953	.3	1	20
isopropylbenzene	5.6758	6.0963	.1	7	20
bromobenzene	1.4149	1.4981	.05	6	20
n-propylbenzene	6.0393	6.4861	.05	7	20
1,1,2,2,-tetrachloroethane	.92601	.95892	.3	4	20
2-chlorotoluene	4.4501	4.7288	.05	6	20
1,2,3-trichloropropane	.72642	.76004	.05	5	20
1,3,5-trimethybenzene	4.4455	4.7695	.05	7	20
4-chorotoluene	3.9751	4.2361	.05	7	20
tert-butylbenzene	3.6727	3.9573	.05	8	20
1,2,4-trimethylbenzene	4.3798	4.6253	.05	6	20
sec-butylbenzene	5.1338	5.5110	.01	7	20
p-isopropyltoluene	4.2516	4.6033	.05	8	20
1,3-dichlorobenzene	2.7107	2.73	.6	1	20
1,4-dichlorobenzene	2.6906	2.7726	.5	3	20
n-butylbenzene	3.3551	3.5698	.05	6	20
1,2-dichlorobenzene	2.4971	2.5194	.4	1	20
1,2-dibromo-3-chloropropane	100	96.787	.05	-3	20
1,2,4-trichlorobenzene	1.2197	1.2435	.2	2	20
hexachlorobutadiene	.42837	.51337	.05	20	20
naphthalene	2.6934	2.7109	.05	1	20
1,2,3-trichlorobenzene	1.0308	1.0673	.05	4	20
dibromofluoromethane	.27379	.2821	.05	3	20
1,2-dichloroethane-d4	.27845	.27513	.05	-1	20
toluene-d8	1.2077	1.2075	.01	0	20

FORM VII MCP-8260-10

7A
CONTINUING CALIBRATION CHECK

Lab Name: Alpha Analytical Labs

SDG No.: L1323309

Instrument ID: Jack.i Calibration Date: 26-NOV-2013 Time: 05:10

Lab File ID: 1126A02 Init. Calib. Date(s): 20-NOV-2 20-NOV-2

Sample No: wg654626-1,31,1 Init. Calib. Times : 03:27 06:44

Compound	$\overline{RRF}$	RRF	MIN RRF	%D	MAX %D
4-bromofluorobenzene	.80064	.85377	.05	7	20

FORM VII MCP-8260-10

ANALYTICAL REPORT

Lab Number:	L1325666
Client:	TRC Environmental Consultants Wannalancit Mills 650 Suffolk Street Lowell, MA 01854
ATTN:	David Sullivan
Phone:	(978) 656-3600
Project Name:	NBHS IRA PSWS
Project Number:	115058
Report Date:	12/26/13

The original project report/data package is held by Alpha Analytical. This report/data package is paginated and should be reproduced only in its entirety. Alpha Analytical holds no responsibility for results and/or data that are not consistent with the original.

Certifications & Approvals: MA (M-MA086), NY (11148), CT (PH-0574), NH (2003), NJ NELAP (MA935), RI (LAO00065), ME (MA00086), PA (68-03671), USDA (Permit #P-330-11-00240), NC (666), TX (T104704476), DOD (L2217), US Army Corps of Engineers.

Eight Walkup Drive, Westborough, MA 01581-1019
508-898-9220 (Fax) 508-898-9193 800-624-9220 - www.alphalab.com

Project Name: NBHS IRA PSWS
Project Number: 115058

Lab Number: L1325666
Report Date: 12/26/13

Alpha Sample ID	Client ID	Sample Location	Collection Date/Time
L1325666-01	INFLUENT	NEW BEDFORD, MA	12/17/13 09:49
L1325666-02	INFLUENT (FILTERED)	NEW BEDFORD, MA	12/17/13 09:49
L1325666-03	EFFLUENT	NEW BEDFORD, MA	12/17/13 09:58
L1325666-04	TRIP BLANK	NEW BEDFORD, MA	12/17/13 00:00
L1325666-05	DRUM #1	NEW BEDFORD, MA	12/17/13 13:00
L1325666-06	DRUM #2	NEW BEDFORD, MA	12/17/13 13:45

Project Name: NBHS IRA PSWS **Lab Number:** L1325666

Project Number: 115058 **Report Date:** 12/26/13

MADEP MCP Response Action Analytical Report Certification

This form provides certifications for all samples performed by MCP methods. Please refer to the Sample Results and Container Information sections of this report for specification of MCP methods used for each analysis. The following questions pertain only to MCP Analytical Methods.

An affirmative response to questions A through F is required for "Presumptive Certainty" status		
A	Were all samples received in a condition consistent with those described on the Chain-of-Custody, properly preserved (including temperature) in the field or laboratory, and prepared/analyzed within method holding times?	YES
B	Were the analytical method(s) and all associated QC requirements specified in the selected CAM protocol(s) followed?	YES
C	Were all required corrective actions and analytical response actions specified in the selected CAM protocol(s) implemented for all identified performance standard non-conformances?	YES
D	Does the laboratory report comply with all the reporting requirements specified in CAM VII A, "Quality Assurance and Quality Control Guidelines for the Acquisition and Reporting of Analytical Data?"	YES
E a.	VPH, EPH, and APH Methods only: Was each method conducted without significant modification(s)? (Refer to the individual method(s) for a list of significant modifications).	N/A
E b.	APH and TO-15 Methods only: Was the complete analyte list reported for each method?	N/A
F	Were all applicable CAM protocol QC and performance standard non-conformances identified and evaluated in a laboratory narrative (including all "No" responses to Questions A through E)?	YES

A response to questions G, H and I is required for "Presumptive Certainty" status		
G	Were the reporting limits at or below all CAM reporting limits specified in the selected CAM protocol(s)?	NO
H	Were all QC performance standards specified in the CAM protocol(s) achieved?	NO
I	Were results reported for the complete analyte list specified in the selected CAM protocol(s)?	YES

For any questions answered "No", please refer to the case narrative section on the following page(s).

Please note that sample matrix information is located in the Sample Results section of this report.

Project Name: NBHS IRA PSWS **Lab Number:** L1325666
Project Number: 115058 **Report Date:** 12/26/13

Case Narrative

The samples were received in accordance with the Chain of Custody and no significant deviations were encountered during the preparation or analysis unless otherwise noted. Sample Receipt, Container Information, and the Chain of Custody are located at the back of the report.

Results contained within this report relate only to the samples submitted under this Alpha Lab Number and meet all of the requirements of NELAC, for all NELAC accredited parameters. The data presented in this report is organized by parameter (i.e. VOC, SVOC, etc.). Sample specific Quality Control data (i.e. Surrogate Spike Recovery) is reported at the end of the target analyte list for each individual sample, followed by the Laboratory Batch Quality Control at the end of each parameter. If a sample was re-analyzed or re-extracted due to a required quality control corrective action and if both sets of data are reported, the Laboratory ID of the re-analysis or re-extraction is designated with an "R" or "RE", respectively. When multiple Batch Quality Control elements are reported (e.g. more than one LCS), the associated samples for each element are noted in the grey shaded header line of each data table. Any Laboratory Batch, Sample Specific % recovery or RPD value that is outside the listed Acceptance Criteria is bolded in the report. Performance criteria for CAM and RCP methods allow for some LCS compound failures to occur and still be within method compliance. In these instances, the specific failures are not narrated but are noted in the associated QC table. This information is also incorporated in the Data Usability format for our Data Merger tool where it can be reviewed along with any associated usability implications. Soil/sediments, solids and tissues are reported on a dry weight basis unless otherwise noted. Definitions of all data qualifiers and acronyms used in this report are provided in the Glossary located at the back of the report.

In reference to questions H (CAM) or 4 (RCP) when "NO" is checked, the performance criteria for CAM and RCP methods allow for some quality control failures to occur and still be within method compliance. In these instances the specific failure is not narrated but noted in the associated QC table. The information is also incorporated in the Data Usability format of our Data Merger tool where it can be reviewed along with any associated usability implications.

Please see the associated ADEx data file for a comparison of laboratory reporting limits that were achieved with the regulatory Numerical Standards requested on the Chain of Custody.

HOLD POLICY
For samples submitted on hold, Alpha's policy is to hold samples (with the exception of Air canisters) free of charge for 21 calendar days from the date the project is completed. After 21 calendar days, we will dispose of all samples submitted including those put on hold unless you have contacted your Client Service Representative and made arrangements for Alpha to continue to hold the samples. Air canisters will be disposed after 3 business days from the date the project is completed.

Please contact Client Services at 800-624-9220 with any questions.

Project Name:	NBHS IRA PSWS	**Lab Number:**	L1325666
Project Number:	115058	**Report Date:**	12/26/13

Case Narrative (continued)

MCP Related Narratives

Volatile Organics

L1325666-01 and -03 have elevated detection limits due to the dilutions required by the elevated concentrations of target compounds in the samples.

L1325666-03 was re-analyzed on dilution in order to quantify the sample within the calibration range. The results should be considered estimated, and are qualified with an E flag, for any compounds that exceeded the calibration range in the initial analysis. The re-analysis was performed only for the compounds that exceeded the calibration range.

In reference to question G:

L1325666-01 and -03: The requested CAM reporting limits were not achieved for methylene chloride, trichlorofluoromethane, 1,1-dichloropropene, bromoform, chloromethane, bromomethane, chloroethane, methyl tert butyl ether, p/m-xylene, dibromomethane, 1,2,3-trichloropropane, dichlorodifluoromethane, dichlorodifluoromethane, acetone, carbon disulfide, 2-butanone, 4-methyl-2-pentanone, 2-hexanone, bromochloromethane, tetrahydrofuran, 2,2-dichloropropane, 1,2-dibromoethane, 1,3-dichloropropane, bromobenzene, n-butylbenzene, sec-butylbenzene, tert-butylbenzene, o-chlorotoluene, p-chlorotoluene, 1,2-dibromo-3-chloropropane, isopropylbenzene, p-isopropyltoluene, naphthalene, n-propylbenzene, 1,2,3-trichlorobenzene, 1,2,4-trichlorobenzene, 1,3,5-trimethylbenzene, 1,2,4-trimethylbenzene, ethyl ether, isopropyl ether, ethyl-tert-butyl-ether, tertiary-amyl methyl ether, and 1,4-dioxane.

In reference to question H:

The initial calibration, associated with L1325666-01, -03, and -04, did not meet the method required minimum response factor on the lowest calibration standard for 4-methyl-2-pentanone (0.06510), 2-butanone (0.08842), and 1,4-dioxane (0.00253), as well as the average response factor for 4-methyl-2-pentanone, acetone, 1,4-dioxane, and 2-butanone. In addition, a quadratic fit was utilized for carbon tetrachloride, tertiary-amyl methyl ether, cis-1,3-dichloropropene, 1,1,1,2-tetrachloroethane, bromoform, and 1,2-dibromo-3-chloropropane.

The continuing calibration standard, associated with L1325666-01, -03, and -04, is outside the acceptance criteria for several compounds; however, it is within overall method allowances. A copy of the continuing calibration standard is included as an addendum to this report.

Project Name:	NBHS IRA PSWS	**Lab Number:**	L1325666
Project Number:	115058	**Report Date:**	12/26/13

Case Narrative (continued)

PCBs

L1325666-01, -05, and -06 have elevated detection limits due to the dilutions required by the elevated concentrations of target compounds in the samples.

In reference to question G:

L1325666-01, -05, and -06: The requested CAM reporting limits were not achieved for all analytes, with the exception of aroclor 1254.

In reference to question H:

The surrogate recoveries for L1325666-05 and -06 are below the acceptance criteria for 2,4,5,6-tetrachloro-m-xylene and decachlorobiphenyl (both 0%) due to the dilutions required to quantitate the samples. Re-extraction was not required; therefore, the results of the original analysis are reported.

I, the undersigned, attest under the pains and penalties of perjury that, to the best of my knowledge and belief and based upon my personal inquiry of those responsible for providing the information contained in this analytical report, such information is accurate and complete. This certificate of analysis is not complete unless this page accompanies any and all pages of this report.

Authorized Signature: Lisa Westerlind

Title: Technical Director/Representative

Date: 12/26/13

ORGANICS

VOLATILES

Project Name: NBHS IRA PSWS **Lab Number:** L1325666

Project Number: 115058 **Report Date:** 12/26/13

SAMPLE RESULTS

Lab ID:	L1325666-01 D	Date Collected:	12/17/13 09:49
Client ID:	INFLUENT	Date Received:	12/18/13
Sample Location:	NEW BEDFORD, MA	Field Prep:	Not Specified
Matrix:	Water		
Analytical Method:	97,8260C		
Analytical Date:	12/23/13 09:22		
Analyst:	MM		

Parameter	Result	Qualifier	Units	RL	MDL	Dilution Factor
MCP Volatile Organics - Westborough Lab						
Methylene chloride	ND		ug/l	4.0	--	2
1,1-Dichloroethane	ND		ug/l	2.0	--	2
Chloroform	ND		ug/l	2.0	--	2
Carbon tetrachloride	ND		ug/l	2.0	--	2
1,2-Dichloropropane	ND		ug/l	2.0	--	2
Dibromochloromethane	ND		ug/l	2.0	--	2
1,1,2-Trichloroethane	ND		ug/l	2.0	--	2
Tetrachloroethene	ND		ug/l	2.0	--	2
Chlorobenzene	ND		ug/l	2.0	--	2
Trichlorofluoromethane	ND		ug/l	4.0	--	2
1,2-Dichloroethane	ND		ug/l	2.0	--	2
1,1,1-Trichloroethane	ND		ug/l	2.0	--	2
Bromodichloromethane	ND		ug/l	2.0	--	2
trans-1,3-Dichloropropene	ND		ug/l	1.0	--	2
cis-1,3-Dichloropropene	ND		ug/l	1.0	--	2
1,1-Dichloropropene	ND		ug/l	4.0	--	2
Bromoform	ND		ug/l	4.0	--	2
1,1,2,2-Tetrachloroethane	ND		ug/l	2.0	--	2
Benzene	ND		ug/l	1.0	--	2
Toluene	25		ug/l	2.0	--	2
Ethylbenzene	ND		ug/l	2.0	--	2
Chloromethane	ND		ug/l	4.0	--	2
Bromomethane	ND		ug/l	4.0	--	2
Vinyl chloride	25		ug/l	2.0	--	2
Chloroethane	ND		ug/l	4.0	--	2
1,1-Dichloroethene	ND		ug/l	2.0	--	2
trans-1,2-Dichloroethene	31		ug/l	2.0	--	2
Trichloroethene	3.5		ug/l	2.0	--	2
1,2-Dichlorobenzene	ND		ug/l	2.0	--	2
1,3-Dichlorobenzene	ND		ug/l	2.0	--	2
1,4-Dichlorobenzene	5.5		ug/l	2.0	--	2

Project Name: NBHS IRA PSWS **Lab Number:** L1325666

Project Number: 115058 **Report Date:** 12/26/13

SAMPLE RESULTS

Lab ID: L1325666-01 D Date Collected: 12/17/13 09:49

Client ID: INFLUENT Date Received: 12/18/13

Sample Location: NEW BEDFORD, MA Field Prep: Not Specified

Parameter	Result	Qualifier	Units	RL	MDL	Dilution Factor
MCP Volatile Organics - Westborough Lab						
Methyl tert butyl ether	ND		ug/l	4.0	--	2
p/m-Xylene	ND		ug/l	4.0	--	2
o-Xylene	ND		ug/l	2.0	--	2
cis-1,2-Dichloroethene	110		ug/l	2.0	--	2
Dibromomethane	ND		ug/l	4.0	--	2
1,2,3-Trichloropropane	ND		ug/l	4.0	--	2
Styrene	ND		ug/l	2.0	--	2
Dichlorodifluoromethane	ND		ug/l	4.0	--	2
Acetone	ND		ug/l	10	--	2
Carbon disulfide	ND		ug/l	4.0	--	2
2-Butanone	ND		ug/l	10	--	2
4-Methyl-2-pentanone	ND		ug/l	10	--	2
2-Hexanone	ND		ug/l	10	--	2
Bromochloromethane	ND		ug/l	4.0	--	2
Tetrahydrofuran	ND		ug/l	4.0	--	2
2,2-Dichloropropane	ND		ug/l	4.0	--	2
1,2-Dibromoethane	ND		ug/l	4.0	--	2
1,3-Dichloropropane	ND		ug/l	4.0	--	2
1,1,1,2-Tetrachloroethane	ND		ug/l	2.0	--	2
Bromobenzene	ND		ug/l	4.0	--	2
n-Butylbenzene	ND		ug/l	4.0	--	2
sec-Butylbenzene	ND		ug/l	4.0	--	2
tert-Butylbenzene	ND		ug/l	4.0	--	2
o-Chlorotoluene	ND		ug/l	4.0	--	2
p-Chlorotoluene	ND		ug/l	4.0	--	2
1,2-Dibromo-3-chloropropane	ND		ug/l	4.0	--	2
Hexachlorobutadiene	ND		ug/l	1.2	--	2
Isopropylbenzene	ND		ug/l	4.0	--	2
p-Isopropyltoluene	ND		ug/l	4.0	--	2
Naphthalene	ND		ug/l	4.0	--	2
n-Propylbenzene	ND		ug/l	4.0	--	2
1,2,3-Trichlorobenzene	ND		ug/l	4.0	--	2
1,2,4-Trichlorobenzene	ND		ug/l	4.0	--	2
1,3,5-Trimethylbenzene	ND		ug/l	4.0	--	2
1,2,4-Trimethylbenzene	ND		ug/l	4.0	--	2
Ethyl ether	ND		ug/l	4.0	--	2
Isopropyl Ether	ND		ug/l	4.0	--	2
Ethyl-Tert-Butyl-Ether	ND		ug/l	4.0	--	2
Tertiary-Amyl Methyl Ether	ND		ug/l	4.0	--	2

Project Name: NBHS IRA PSWS **Lab Number:** L1325666

Project Number: 115058 **Report Date:** 12/26/13

SAMPLE RESULTS

Lab ID: L1325666-01 D Date Collected: 12/17/13 09:49

Client ID: INFLUENT Date Received: 12/18/13

Sample Location: NEW BEDFORD, MA Field Prep: Not Specified

Parameter	Result	Qualifier	Units	RL	MDL	Dilution Factor
MCP Volatile Organics - Westborough Lab						
1,4-Dioxane	ND		ug/l	500	--	2

Surrogate	% Recovery	Qualifier	Acceptance Criteria
1,2-Dichloroethane-d4	100		70-130
Toluene-d8	99		70-130
4-Bromofluorobenzene	100		70-130
Dibromofluoromethane	101		70-130

Project Name: NBHS IRA PSWS **Lab Number:** L1325666

Project Number: 115058 **Report Date:** 12/26/13

SAMPLE RESULTS

Lab ID:	L1325666-03	D2	Date Collected:	12/17/13 09:58
Client ID:	EFFLUENT		Date Received:	12/18/13
Sample Location:	NEW BEDFORD, MA		Field Prep:	Not Specified
Matrix:	Water			
Analytical Method:	97,8260C			
Analytical Date:	12/23/13 16:42			
Analyst:	MM			

Parameter	Result	Qualifier	Units	RL	MDL	Dilution Factor
MCP Volatile Organics - Westborough Lab						
cis-1,2-Dichloroethene	190		ug/l	10	--	10

Surrogate	% Recovery	Qualifier	Acceptance Criteria
1,2-Dichloroethane-d4	102		70-130
Toluene-d8	99		70-130
4-Bromofluorobenzene	100		70-130
Dibromofluoromethane	100		70-130

Project Name: NBHS IRA PSWS **Lab Number:** L1325666

Project Number: 115058 **Report Date:** 12/26/13

SAMPLE RESULTS

Lab ID:	L1325666-03	D	Date Collected:	12/17/13 09:58
Client ID:	EFFLUENT		Date Received:	12/18/13
Sample Location:	NEW BEDFORD, MA		Field Prep:	Not Specified
Matrix:	Water			
Analytical Method:	97,8260C			
Analytical Date:	12/23/13 09:53			
Analyst:	MM			

Parameter	Result	Qualifier	Units	RL	MDL	Dilution Factor
MCP Volatile Organics - Westborough Lab						
Methylene chloride	ND		ug/l	4.0	--	2
1,1-Dichloroethane	ND		ug/l	2.0	--	2
Chloroform	ND		ug/l	2.0	--	2
Carbon tetrachloride	ND		ug/l	2.0	--	2
1,2-Dichloropropane	ND		ug/l	2.0	--	2
Dibromochloromethane	ND		ug/l	2.0	--	2
1,1,2-Trichloroethane	ND		ug/l	2.0	--	2
Tetrachloroethene	ND		ug/l	2.0	--	2
Chlorobenzene	ND		ug/l	2.0	--	2
Trichlorofluoromethane	ND		ug/l	4.0	--	2
1,2-Dichloroethane	ND		ug/l	2.0	--	2
1,1,1-Trichloroethane	ND		ug/l	2.0	--	2
Bromodichloromethane	ND		ug/l	2.0	--	2
trans-1,3-Dichloropropene	ND		ug/l	1.0	--	2
cis-1,3-Dichloropropene	ND		ug/l	1.0	--	2
1,1-Dichloropropene	ND		ug/l	4.0	--	2
Bromoform	ND		ug/l	4.0	--	2
1,1,2,2-Tetrachloroethane	ND		ug/l	2.0	--	2
Benzene	ND		ug/l	1.0	--	2
Toluene	ND		ug/l	2.0	--	2
Ethylbenzene	ND		ug/l	2.0	--	2
Chloromethane	ND		ug/l	4.0	--	2
Bromomethane	ND		ug/l	4.0	--	2
Vinyl chloride	ND		ug/l	2.0	--	2
Chloroethane	ND		ug/l	4.0	--	2
1,1-Dichloroethene	ND		ug/l	2.0	--	2
trans-1,2-Dichloroethene	13		ug/l	2.0	--	2
Trichloroethene	ND		ug/l	2.0	--	2
1,2-Dichlorobenzene	ND		ug/l	2.0	--	2
1,3-Dichlorobenzene	ND		ug/l	2.0	--	2
1,4-Dichlorobenzene	ND		ug/l	2.0	--	2

Project Name: NBHS IRA PSWS **Lab Number:** L1325666

Project Number: 115058 **Report Date:** 12/26/13

SAMPLE RESULTS

Lab ID: L1325666-03 D Date Collected: 12/17/13 09:58

Client ID: EFFLUENT Date Received: 12/18/13

Sample Location: NEW BEDFORD, MA Field Prep: Not Specified

Parameter	Result	Qualifier	Units	RL	MDL	Dilution Factor
MCP Volatile Organics - Westborough Lab						
Methyl tert butyl ether	ND		ug/l	4.0	--	2
p/m-Xylene	ND		ug/l	4.0	--	2
o-Xylene	ND		ug/l	2.0	--	2
cis-1,2-Dichloroethene	220	E	ug/l	2.0	--	2
Dibromomethane	ND		ug/l	4.0	--	2
1,2,3-Trichloropropane	ND		ug/l	4.0	--	2
Styrene	ND		ug/l	2.0	--	2
Dichlorodifluoromethane	ND		ug/l	4.0	--	2
Acetone	ND		ug/l	10	--	2
Carbon disulfide	ND		ug/l	4.0	--	2
2-Butanone	ND		ug/l	10	--	2
4-Methyl-2-pentanone	ND		ug/l	10	--	2
2-Hexanone	ND		ug/l	10	--	2
Bromochloromethane	ND		ug/l	4.0	--	2
Tetrahydrofuran	ND		ug/l	4.0	--	2
2,2-Dichloropropane	ND		ug/l	4.0	--	2
1,2-Dibromoethane	ND		ug/l	4.0	--	2
1,3-Dichloropropane	ND		ug/l	4.0	--	2
1,1,1,2-Tetrachloroethane	ND		ug/l	2.0	--	2
Bromobenzene	ND		ug/l	4.0	--	2
n-Butylbenzene	ND		ug/l	4.0	--	2
sec-Butylbenzene	ND		ug/l	4.0	--	2
tert-Butylbenzene	ND		ug/l	4.0	--	2
o-Chlorotoluene	ND		ug/l	4.0	--	2
p-Chlorotoluene	ND		ug/l	4.0	--	2
1,2-Dibromo-3-chloropropane	ND		ug/l	4.0	--	2
Hexachlorobutadiene	ND		ug/l	1.2	--	2
Isopropylbenzene	ND		ug/l	4.0	--	2
p-Isopropyltoluene	ND		ug/l	4.0	--	2
Naphthalene	ND		ug/l	4.0	--	2
n-Propylbenzene	ND		ug/l	4.0	--	2
1,2,3-Trichlorobenzene	ND		ug/l	4.0	--	2
1,2,4-Trichlorobenzene	ND		ug/l	4.0	--	2
1,3,5-Trimethylbenzene	ND		ug/l	4.0	--	2
1,2,4-Trimethylbenzene	ND		ug/l	4.0	--	2
Ethyl ether	ND		ug/l	4.0	--	2
Isopropyl Ether	ND		ug/l	4.0	--	2
Ethyl-Tert-Butyl-Ether	ND		ug/l	4.0	--	2
Tertiary-Amyl Methyl Ether	ND		ug/l	4.0	--	2

Project Name: NBHS IRA PSWS **Lab Number:** L1325666

Project Number: 115058 **Report Date:** 12/26/13

SAMPLE RESULTS

Lab ID:	L1325666-03 D	Date Collected:	12/17/13 09:58
Client ID:	EFFLUENT	Date Received:	12/18/13
Sample Location:	NEW BEDFORD, MA	Field Prep:	Not Specified

Parameter	Result	Qualifier	Units	RL	MDL	Dilution Factor
MCP Volatile Organics - Westborough Lab						
1,4-Dioxane	ND		ug/l	500	--	2

Surrogate	% Recovery	Qualifier	Acceptance Criteria
1,2-Dichloroethane-d4	101		70-130
Toluene-d8	100		70-130
4-Bromofluorobenzene	101		70-130
Dibromofluoromethane	102		70-130

Project Name: NBHS IRA PSWS **Lab Number:** L1325666

Project Number: 115058 **Report Date:** 12/26/13

SAMPLE RESULTS

Lab ID:	L1325666-04	Date Collected:	12/17/13 00:00
Client ID:	TRIP BLANK	Date Received:	12/18/13
Sample Location:	NEW BEDFORD, MA	Field Prep:	Not Specified
Matrix:	Water		
Analytical Method:	97,8260C		
Analytical Date:	12/23/13 07:47		
Analyst:	MM		

Parameter	Result	Qualifier	Units	RL	MDL	Dilution Factor
MCP Volatile Organics - Westborough Lab						
Methylene chloride	ND		ug/l	2.0	--	1
1,1-Dichloroethane	ND		ug/l	1.0	--	1
Chloroform	ND		ug/l	1.0	--	1
Carbon tetrachloride	ND		ug/l	1.0	--	1
1,2-Dichloropropane	ND		ug/l	1.0	--	1
Dibromochloromethane	ND		ug/l	1.0	--	1
1,1,2-Trichloroethane	ND		ug/l	1.0	--	1
Tetrachloroethene	ND		ug/l	1.0	--	1
Chlorobenzene	ND		ug/l	1.0	--	1
Trichlorofluoromethane	ND		ug/l	2.0	--	1
1,2-Dichloroethane	ND		ug/l	1.0	--	1
1,1,1-Trichloroethane	ND		ug/l	1.0	--	1
Bromodichloromethane	ND		ug/l	1.0	--	1
trans-1,3-Dichloropropene	ND		ug/l	0.50	--	1
cis-1,3-Dichloropropene	ND		ug/l	0.50	--	1
1,1-Dichloropropene	ND		ug/l	2.0	--	1
Bromoform	ND		ug/l	2.0	--	1
1,1,2,2-Tetrachloroethane	ND		ug/l	1.0	--	1
Benzene	ND		ug/l	0.50	--	1
Toluene	ND		ug/l	1.0	--	1
Ethylbenzene	ND		ug/l	1.0	--	1
Chloromethane	ND		ug/l	2.0	--	1
Bromomethane	ND		ug/l	2.0	--	1
Vinyl chloride	ND		ug/l	1.0	--	1
Chloroethane	ND		ug/l	2.0	--	1
1,1-Dichloroethene	ND		ug/l	1.0	--	1
trans-1,2-Dichloroethene	ND		ug/l	1.0	--	1
Trichloroethene	ND		ug/l	1.0	--	1
1,2-Dichlorobenzene	ND		ug/l	1.0	--	1
1,3-Dichlorobenzene	ND		ug/l	1.0	--	1
1,4-Dichlorobenzene	ND		ug/l	1.0	--	1

Project Name: NBHS IRA PSWS **Lab Number:** L1325666

Project Number: 115058 **Report Date:** 12/26/13

SAMPLE RESULTS

Lab ID: L1325666-04 Date Collected: 12/17/13 00:00

Client ID: TRIP BLANK Date Received: 12/18/13

Sample Location: NEW BEDFORD, MA Field Prep: Not Specified

Parameter	Result	Qualifier	Units	RL	MDL	Dilution Factor
MCP Volatile Organics - Westborough Lab						
Methyl tert butyl ether	ND		ug/l	2.0	--	1
p/m-Xylene	ND		ug/l	2.0	--	1
o-Xylene	ND		ug/l	1.0	--	1
cis-1,2-Dichloroethene	ND		ug/l	1.0	--	1
Dibromomethane	ND		ug/l	2.0	--	1
1,2,3-Trichloropropane	ND		ug/l	2.0	--	1
Styrene	ND		ug/l	1.0	--	1
Dichlorodifluoromethane	ND		ug/l	2.0	--	1
Acetone	ND		ug/l	5.0	--	1
Carbon disulfide	ND		ug/l	2.0	--	1
2-Butanone	ND		ug/l	5.0	--	1
4-Methyl-2-pentanone	ND		ug/l	5.0	--	1
2-Hexanone	ND		ug/l	5.0	--	1
Bromochloromethane	ND		ug/l	2.0	--	1
Tetrahydrofuran	ND		ug/l	2.0	--	1
2,2-Dichloropropane	ND		ug/l	2.0	--	1
1,2-Dibromoethane	ND		ug/l	2.0	--	1
1,3-Dichloropropane	ND		ug/l	2.0	--	1
1,1,1,2-Tetrachloroethane	ND		ug/l	1.0	--	1
Bromobenzene	ND		ug/l	2.0	--	1
n-Butylbenzene	ND		ug/l	2.0	--	1
sec-Butylbenzene	ND		ug/l	2.0	--	1
tert-Butylbenzene	ND		ug/l	2.0	--	1
o-Chlorotoluene	ND		ug/l	2.0	--	1
p-Chlorotoluene	ND		ug/l	2.0	--	1
1,2-Dibromo-3-chloropropane	ND		ug/l	2.0	--	1
Hexachlorobutadiene	ND		ug/l	0.60	--	1
Isopropylbenzene	ND		ug/l	2.0	--	1
p-Isopropyltoluene	ND		ug/l	2.0	--	1
Naphthalene	ND		ug/l	2.0	--	1
n-Propylbenzene	ND		ug/l	2.0	--	1
1,2,3-Trichlorobenzene	ND		ug/l	2.0	--	1
1,2,4-Trichlorobenzene	ND		ug/l	2.0	--	1
1,3,5-Trimethylbenzene	ND		ug/l	2.0	--	1
1,2,4-Trimethylbenzene	ND		ug/l	2.0	--	1
Ethyl ether	ND		ug/l	2.0	--	1
Isopropyl Ether	ND		ug/l	2.0	--	1
Ethyl-Tert-Butyl-Ether	ND		ug/l	2.0	--	1
Tertiary-Amyl Methyl Ether	ND		ug/l	2.0	--	1

Project Name: NBHS IRA PSWS **Lab Number:** L1325666

Project Number: 115058 **Report Date:** 12/26/13

SAMPLE RESULTS

Lab ID:	L1325666-04	Date Collected:	12/17/13 00:00
Client ID:	TRIP BLANK	Date Received:	12/18/13
Sample Location:	NEW BEDFORD, MA	Field Prep:	Not Specified

Parameter	Result	Qualifier	Units	RL	MDL	Dilution Factor
MCP Volatile Organics - Westborough Lab						
1,4-Dioxane	ND		ug/l	250	--	1

Surrogate	% Recovery	Qualifier	Acceptance Criteria
1,2-Dichloroethane-d4	99		70-130
Toluene-d8	101		70-130
4-Bromofluorobenzene	99		70-130
Dibromofluoromethane	99		70-130

Project Name: NBHS IRA PSWS **Lab Number:** L1325666

Project Number: 115058 **Report Date:** 12/26/13

Method Blank Analysis
Batch Quality Control

Analytical Method: 97,8260C
Analytical Date: 12/23/13 07:16
Analyst: MM

Parameter	Result	Qualifier	Units	RL	MDL
MCP Volatile Organics - Westborough Lab for sample(s): 01,03-04 Batch: WG661049-3					
Methylene chloride	ND		ug/l	2.0	--
1,1-Dichloroethane	ND		ug/l	1.0	--
Chloroform	ND		ug/l	1.0	--
Carbon tetrachloride	ND		ug/l	1.0	--
1,2-Dichloropropane	ND		ug/l	1.0	--
Dibromochloromethane	ND		ug/l	1.0	--
1,1,2-Trichloroethane	ND		ug/l	1.0	--
Tetrachloroethene	ND		ug/l	1.0	--
Chlorobenzene	ND		ug/l	1.0	--
Trichlorofluoromethane	ND		ug/l	2.0	--
1,2-Dichloroethane	ND		ug/l	1.0	--
1,1,1-Trichloroethane	ND		ug/l	1.0	--
Bromodichloromethane	ND		ug/l	1.0	--
trans-1,3-Dichloropropene	ND		ug/l	0.50	--
cis-1,3-Dichloropropene	ND		ug/l	0.50	--
1,1-Dichloropropene	ND		ug/l	2.0	--
Bromoform	ND		ug/l	2.0	--
1,1,2,2-Tetrachloroethane	ND		ug/l	1.0	--
Benzene	ND		ug/l	0.50	--
Toluene	ND		ug/l	1.0	--
Ethylbenzene	ND		ug/l	1.0	--
Chloromethane	ND		ug/l	2.0	--
Bromomethane	ND		ug/l	2.0	--
Vinyl chloride	ND		ug/l	1.0	--
Chloroethane	ND		ug/l	2.0	--
1,1-Dichloroethene	ND		ug/l	1.0	--
trans-1,2-Dichloroethene	ND		ug/l	1.0	--
Trichloroethene	ND		ug/l	1.0	--
1,2-Dichlorobenzene	ND		ug/l	1.0	--
1,3-Dichlorobenzene	ND		ug/l	1.0	--
1,4-Dichlorobenzene	ND		ug/l	1.0	--

Project Name: NBHS IRA PSWS **Lab Number:** L1325666

Project Number: 115058 **Report Date:** 12/26/13

Method Blank Analysis
Batch Quality Control

Analytical Method: 97,8260C
Analytical Date: 12/23/13 07:16
Analyst: MM

Parameter	Result	Qualifier	Units	RL	MDL
MCP Volatile Organics - Westborough Lab for sample(s): 01,03-04 Batch: WG661049-3					
Methyl tert butyl ether	ND		ug/l	2.0	--
p/m-Xylene	ND		ug/l	2.0	--
o-Xylene	ND		ug/l	1.0	--
cis-1,2-Dichloroethene	ND		ug/l	1.0	--
Dibromomethane	ND		ug/l	2.0	--
1,2,3-Trichloropropane	ND		ug/l	2.0	--
Styrene	ND		ug/l	1.0	--
Dichlorodifluoromethane	ND		ug/l	2.0	--
Acetone	ND		ug/l	5.0	--
Carbon disulfide	ND		ug/l	2.0	--
2-Butanone	ND		ug/l	5.0	--
4-Methyl-2-pentanone	ND		ug/l	5.0	--
2-Hexanone	ND		ug/l	5.0	--
Bromochloromethane	ND		ug/l	2.0	--
Tetrahydrofuran	ND		ug/l	2.0	--
2,2-Dichloropropane	ND		ug/l	2.0	--
1,2-Dibromoethane	ND		ug/l	2.0	--
1,3-Dichloropropane	ND		ug/l	2.0	--
1,1,1,2-Tetrachloroethane	ND		ug/l	1.0	--
Bromobenzene	ND		ug/l	2.0	--
n-Butylbenzene	ND		ug/l	2.0	--
sec-Butylbenzene	ND		ug/l	2.0	--
tert-Butylbenzene	ND		ug/l	2.0	--
o-Chlorotoluene	ND		ug/l	2.0	--
p-Chlorotoluene	ND		ug/l	2.0	--
1,2-Dibromo-3-chloropropane	ND		ug/l	2.0	--
Hexachlorobutadiene	ND		ug/l	0.60	--
Isopropylbenzene	ND		ug/l	2.0	--
p-Isopropyltoluene	ND		ug/l	2.0	--
Naphthalene	ND		ug/l	2.0	--
n-Propylbenzene	ND		ug/l	2.0	--

Project Name: NBHS IRA PSWS **Lab Number:** L1325666

Project Number: 115058 **Report Date:** 12/26/13

Method Blank Analysis
Batch Quality Control

Analytical Method: 97,8260C
Analytical Date: 12/23/13 07:16
Analyst: MM

Parameter	Result	Qualifier	Units	RL	MDL
MCP Volatile Organics - Westborough Lab for sample(s): 01,03-04 Batch: WG661049-3					
1,2,3-Trichlorobenzene	ND		ug/l	2.0	--
1,2,4-Trichlorobenzene	ND		ug/l	2.0	--
1,3,5-Trimethylbenzene	ND		ug/l	2.0	--
1,2,4-Trimethylbenzene	ND		ug/l	2.0	--
Ethyl ether	ND		ug/l	2.0	--
Isopropyl Ether	ND		ug/l	2.0	--
Ethyl-Tert-Butyl-Ether	ND		ug/l	2.0	--
Tertiary-Amyl Methyl Ether	ND		ug/l	2.0	--
1,4-Dioxane	ND		ug/l	250	--

Surrogate	%Recovery	Qualifier	Acceptance Criteria
1,2-Dichloroethane-d4	100		70-130
Toluene-d8	101		70-130
4-Bromofluorobenzene	99		70-130
Dibromofluoromethane	99		70-130

Lab Control Sample Analysis
Batch Quality Control

Project Name: NBHS IRA PSWS
Project Number: 115058

Lab Number: L1325666
Report Date: 12/26/13

Parameter	LCS %Recovery	Qual	LCSD %Recovery	Qual	%Recovery Limits	RPD	Qual	RPD Limits
MCP Volatile Organics - Westborough Lab Associated sample(s): 01,03-04 Batch: WG661049-1 WG661049-2								
Methylene chloride	102		108		70-130	6		20
1,1-Dichloroethane	105		109		70-130	4		20
Chloroform	105		110		70-130	5		20
Carbon tetrachloride	91		97		70-130	6		20
1,2-Dichloropropane	105		110		70-130	5		20
Dibromochloromethane	100		108		70-130	8		20
1,1,2-Trichloroethane	106		112		70-130	6		20
Tetrachloroethene	108		113		70-130	5		20
Chlorobenzene	105		110		70-130	5		20
Trichlorofluoromethane	102		108		70-130	6		20
1,2-Dichloroethane	104		109		70-130	5		20
1,1,1-Trichloroethane	110		117		70-130	6		20
Bromodichloromethane	103		109		70-130	6		20
trans-1,3-Dichloropropene	99		104		70-130	5		20
cis-1,3-Dichloropropene	102		107		70-130	5		20
1,1-Dichloropropene	106		112		70-130	6		20
Bromoform	99		105		70-130	6		20
1,1,2,2-Tetrachloroethane	104		110		70-130	6		20
Benzene	106		111		70-130	5		20
Toluene	104		110		70-130	6		20
Ethylbenzene	109		115		70-130	5		20

Lab Control Sample Analysis
Batch Quality Control

Project Name: NBHS IRA PSWS
Project Number: 115058

Lab Number: L1325666
Report Date: 12/26/13

Parameter	LCS %Recovery	Qual	LCSD %Recovery	Qual	%Recovery Limits	RPD	Qual	RPD Limits
MCP Volatile Organics - Westborough Lab Associated sample(s): 01,03-04 Batch: WG661049-1 WG661049-2								
Chloromethane	103		110		70-130	7		20
Bromomethane	100		108		70-130	8		20
Vinyl chloride	105		113		70-130	7		20
Chloroethane	104		107		70-130	3		20
1,1-Dichloroethene	107		112		70-130	5		20
trans-1,2-Dichloroethene	106		111		70-130	5		20
Trichloroethene	105		110		70-130	5		20
1,2-Dichlorobenzene	105		111		70-130	6		20
1,3-Dichlorobenzene	105		110		70-130	5		20
1,4-Dichlorobenzene	105		110		70-130	5		20
Methyl tert butyl ether	111		117		70-130	5		20
p/m-Xylene	103		108		70-130	5		20
o-Xylene	104		109		70-130	5		20
cis-1,2-Dichloroethene	102		106		70-130	4		20
Dibromomethane	104		109		70-130	5		20
1,2,3-Trichloropropane	105		110		70-130	5		20
Styrene	111		117		70-130	5		20
Dichlorodifluoromethane	111		118		70-130	6		20
Acetone	125		124		70-130	1		20
Carbon disulfide	97		103		70-130	6		20
2-Butanone	110		112		70-130	2		20

Lab Control Sample Analysis
Batch Quality Control

Project Name: NBHS IRA PSWS
Project Number: 115058

Lab Number: L1325666
Report Date: 12/26/13

Parameter	LCS %Recovery	Qual	LCSD %Recovery	Qual	%Recovery Limits	RPD	Qual	RPD Limits
MCP Volatile Organics - Westborough Lab Associated sample(s): 01,03-04 Batch: WG661049-1 WG661049-2								
4-Methyl-2-pentanone	103		106		70-130	3		20
2-Hexanone	103		106		70-130	3		20
Bromochloromethane	107		112		70-130	5		20
Tetrahydrofuran	96		102		70-130	6		20
2,2-Dichloropropane	111		115		70-130	4		20
1,2-Dibromoethane	103		107		70-130	4		20
1,3-Dichloropropane	106		111		70-130	5		20
1,1,1,2-Tetrachloroethane	99		105		70-130	6		20
Bromobenzene	106		111		70-130	5		20
n-Butylbenzene	107		111		70-130	4		20
sec-Butylbenzene	112		116		70-130	4		20
tert-Butylbenzene	107		112		70-130	5		20
o-Chlorotoluene	104		108		70-130	4		20
p-Chlorotoluene	106		111		70-130	5		20
1,2-Dibromo-3-chloropropane	98		107		70-130	9		20
Hexachlorobutadiene	106		110		70-130	4		20
Isopropylbenzene	111		116		70-130	4		20
p-Isopropyltoluene	111		115		70-130	4		20
Naphthalene	104		108		70-130	4		20
n-Propylbenzene	111		116		70-130	4		20
1,2,3-Trichlorobenzene	102		106		70-130	4		20

Lab Control Sample Analysis
Batch Quality Control

Project Name: NBHS IRA PSWS
Project Number: 115058

Lab Number: L1325666
Report Date: 12/26/13

Parameter	LCS %Recovery	Qual	LCSD %Recovery	Qual	%Recovery Limits	RPD	Qual	RPD Limits
MCP Volatile Organics - Westborough Lab Associated sample(s): 01,03-04 Batch: WG661049-1 WG661049-2								
1,2,4-Trichlorobenzene	102		106		70-130	4		20
1,3,5-Trimethylbenzene	107		112		70-130	5		20
1,2,4-Trimethylbenzene	108		113		70-130	5		20
Ethyl ether	106		111		70-130	5		20
Isopropyl Ether	104		110		70-130	6		20
Ethyl-Tert-Butyl-Ether	114		119		70-130	4		20
Tertiary-Amyl Methyl Ether	110		115		70-130	4		20
1,4-Dioxane	90		100		70-130	11		20

Surrogate	LCS %Recovery	Qual	LCSD %Recovery	Qual	Acceptance Criteria
1,2-Dichloroethane-d4	99		99		70-130
Toluene-d8	100		100		70-130
4-Bromofluorobenzene	98		98		70-130
Dibromofluoromethane	101		100		70-130

PETROLEUM HYDROCARBONS

Project Name: NBHS IRA PSWS **Lab Number:** L1325666

Project Number: 115058 **Report Date:** 12/26/13

SAMPLE RESULTS

Lab ID:	L1325666-01	Date Collected:	12/17/13 09:49
Client ID:	INFLUENT	Date Received:	12/18/13
Sample Location:	NEW BEDFORD, MA	Field Prep:	Not Specified
Matrix:	Water	Extraction Method:	EPA 3510C
Analytical Method:	1,8015C(M)	Extraction Date:	12/19/13 16:10
Analytical Date:	12/20/13 17:01		
Analyst:	AR		

Parameter	Result	Qualifier	Units	RL	MDL	Dilution Factor
Petroleum Hydrocarbon Quantitation - Westborough Lab						
TPH	226		ug/l	200	--	1

Surrogate	% Recovery	Qualifier	Acceptance Criteria
o-Terphenyl	93		40-140

Project Name: NBHS IRA PSWS **Lab Number:** L1325666

Project Number: 115058 **Report Date:** 12/26/13

SAMPLE RESULTS

Lab ID:	L1325666-02	Date Collected:	12/17/13 09:49
Client ID:	INFLUENT (FILTERED)	Date Received:	12/18/13
Sample Location:	NEW BEDFORD, MA	Field Prep:	Not Specified
Matrix:	Water	Extraction Method:	EPA 3510C
Analytical Method:	1,8015C(M)	Extraction Date:	12/19/13 16:10
Analytical Date:	12/20/13 17:32		
Analyst:	AR		

Parameter	Result	Qualifier	Units	RL	MDL	Dilution Factor
Petroleum Hydrocarbon Quantitation - Westborough Lab						
TPH	ND		ug/l	200	--	1

Surrogate	% Recovery	Qualifier	Acceptance Criteria
o-Terphenyl	97		40-140

Project Name: NBHS IRA PSWS
Project Number: 115058

Lab Number: L1325666
Report Date: 12/26/13

Method Blank Analysis
Batch Quality Control

Analytical Method: 1,8015C(M)
Analytical Date: 12/20/13 12:54
Analyst: AR

Extraction Method: EPA 3510C
Extraction Date: 12/19/13 16:10

Parameter	Result	Qualifier	Units	RL	MDL
Petroleum Hydrocarbon Quantitation - Westborough Lab for sample(s): 01-02 Batch: WG660382-1					
TPH	ND		ug/l	200	--

Surrogate	%Recovery	Qualifier	Acceptance Criteria
o-Terphenyl	97		40-140

Lab Control Sample Analysis

Batch Quality Control

Project Name: NBHS IRA PSWS

Project Number: 115058

Lab Number: L1325666

Report Date: 12/26/13

Parameter	LCS %Recovery	Qual	LCSD %Recovery	Qual	%Recovery Limits	RPD	Qual	RPD Limits
Petroleum Hydrocarbon Quantitation - Westborough Lab Associated sample(s): 01-02 Batch: WG660382-2								
TPH	87		-		40-140	-		40

Surrogate	LCS %Recovery	Qual	LCSD %Recovery	Qual	Acceptance Criteria
o-Terphenyl	89				40-140

Lab Duplicate Analysis
Batch Quality Control

Project Name: NBHS IRA PSWS
Project Number: 115058

Lab Number: L1325666
Report Date: 12/26/13

Parameter	Native Sample	Duplicate Sample	Units	RPD	Qual	RPD Limits
Petroleum Hydrocarbon Quantitation - Westborough Lab Associated sample(s): 01-02 QC Batch ID: WG660382-3 QC Sample: L1325666-02 Client ID: INFLUENT (FILTERED)						
TPH	ND	ND	ug/l	NC		40

Surrogate	%Recovery	Qualifier	%Recovery	Qualifier	Acceptance Criteria
o-Terphenyl	97		91		40-140

PCBS

Project Name: NBHS IRA PSWS **Lab Number:** L1325666

Project Number: 115058 **Report Date:** 12/26/13

SAMPLE RESULTS

Lab ID:	L1325666-01	D	Date Collected:	12/17/13 09:49
Client ID:	INFLUENT		Date Received:	12/18/13
Sample Location:	NEW BEDFORD, MA		Field Prep:	Not Specified
Matrix:	Water		Extraction Method:	EPA 3510C
Analytical Method:	97,8082A		Extraction Date:	12/18/13 19:34
Analytical Date:	12/20/13 22:49		Cleanup Method1:	EPA 3665A
Analyst:	JT		Cleanup Date1:	12/19/13
			Cleanup Method2:	EPA 3660B
			Cleanup Date2:	12/19/13

Parameter	Result	Qualifier	Units	RL	MDL	Dilution Factor	Column
MCP Polychlorinated Biphenyls - Westborough Lab							
Aroclor 1016	ND		ug/l	1.25	--	5	A
Aroclor 1221	ND		ug/l	1.25	--	5	A
Aroclor 1232	ND		ug/l	1.25	--	5	A
Aroclor 1242	ND		ug/l	1.25	--	5	A
Aroclor 1248	ND		ug/l	1.25	--	5	A
Aroclor 1254	25.5		ug/l	1.25	--	5	B
Aroclor 1260	ND		ug/l	1.25	--	5	A
Aroclor 1262	ND		ug/l	1.25	--	5	A
Aroclor 1268	ND		ug/l	1.25	--	5	A

Surrogate	% Recovery	Qualifier	Acceptance Criteria	Column
2,4,5,6-Tetrachloro-m-xylene	78		30-150	A
Decachlorobiphenyl	72		30-150	A
2,4,5,6-Tetrachloro-m-xylene	81		30-150	B
Decachlorobiphenyl	82		30-150	B

Project Name: NBHS IRA PSWS **Lab Number:** L1325666

Project Number: 115058 **Report Date:** 12/26/13

SAMPLE RESULTS

Lab ID:	L1325666-02	Date Collected:	12/17/13 09:49
Client ID:	INFLUENT (FILTERED)	Date Received:	12/18/13
Sample Location:	NEW BEDFORD, MA	Field Prep:	Not Specified
Matrix:	Water	Extraction Method:	EPA 3510C
Analytical Method:	97,8082A	Extraction Date:	12/18/13 19:34
Analytical Date:	12/19/13 19:17	Cleanup Method1:	EPA 3665A
Analyst:	JT	Cleanup Date1:	12/19/13
		Cleanup Method2:	EPA 3660B
		Cleanup Date2:	12/19/13

Parameter	Result	Qualifier	Units	RL	MDL	Dilution Factor	Column
MCP Polychlorinated Biphenyls - Westborough Lab							
Aroclor 1016	ND		ug/l	0.250	--	1	A
Aroclor 1221	ND		ug/l	0.250	--	1	A
Aroclor 1232	ND		ug/l	0.250	--	1	A
Aroclor 1242	ND		ug/l	0.250	--	1	A
Aroclor 1248	ND		ug/l	0.250	--	1	A
Aroclor 1254	ND		ug/l	0.250	--	1	A
Aroclor 1260	ND		ug/l	0.250	--	1	A
Aroclor 1262	ND		ug/l	0.250	--	1	A
Aroclor 1268	ND		ug/l	0.250	--	1	A

Surrogate	% Recovery	Qualifier	Acceptance Criteria	Column
2,4,5,6-Tetrachloro-m-xylene	69		30-150	A
Decachlorobiphenyl	68		30-150	A
2,4,5,6-Tetrachloro-m-xylene	74		30-150	B
Decachlorobiphenyl	75		30-150	B

Project Name: NBHS IRA PSWS **Lab Number:** L1325666

Project Number: 115058 **Report Date:** 12/26/13

SAMPLE RESULTS

Lab ID:	L1325666-03	Date Collected:	12/17/13 09:58
Client ID:	EFFLUENT	Date Received:	12/18/13
Sample Location:	NEW BEDFORD, MA	Field Prep:	Not Specified
Matrix:	Water	Extraction Method:	EPA 3510C
Analytical Method:	97,8082A	Extraction Date:	12/18/13 19:34
Analytical Date:	12/19/13 19:30	Cleanup Method1:	EPA 3665A
Analyst:	JT	Cleanup Date1:	12/19/13
		Cleanup Method2:	EPA 3660B
		Cleanup Date2:	12/19/13

Parameter	Result	Qualifier	Units	RL	MDL	Dilution Factor	Column
MCP Polychlorinated Biphenyls - Westborough Lab							
Aroclor 1016	ND		ug/l	0.250	--	1	A
Aroclor 1221	ND		ug/l	0.250	--	1	A
Aroclor 1232	ND		ug/l	0.250	--	1	A
Aroclor 1242	ND		ug/l	0.250	--	1	A
Aroclor 1248	ND		ug/l	0.250	--	1	A
Aroclor 1254	ND		ug/l	0.250	--	1	A
Aroclor 1260	ND		ug/l	0.250	--	1	A
Aroclor 1262	ND		ug/l	0.250	--	1	A
Aroclor 1268	ND		ug/l	0.250	--	1	A

Surrogate	% Recovery	Qualifier	Acceptance Criteria	Column
2,4,5,6-Tetrachloro-m-xylene	55		30-150	A
Decachlorobiphenyl	69		30-150	A
2,4,5,6-Tetrachloro-m-xylene	60		30-150	B
Decachlorobiphenyl	74		30-150	B

Project Name: NBHS IRA PSWS **Lab Number:** L1325666

Project Number: 115058 **Report Date:** 12/26/13

SAMPLE RESULTS

Lab ID:	L1325666-05 D	Date Collected:	12/17/13 13:00
Client ID:	DRUM #1	Date Received:	12/18/13
Sample Location:	NEW BEDFORD, MA	Field Prep:	Not Specified
Matrix:	Solid	Extraction Method:	EPA 3540C
Analytical Method:	97,8082A	Extraction Date:	12/19/13 01:00
Analytical Date:	12/24/13 09:06	Cleanup Method1:	EPA 3665A
Analyst:	TQ	Cleanup Date1:	12/19/13
Percent Solids:	72%	Cleanup Method2:	EPA 3660B
		Cleanup Date2:	12/19/13

Parameter	Result	Qualifier	Units	RL	MDL	Dilution Factor	Column
MCP Polychlorinated Biphenyls - Westborough Lab							
Aroclor 1016	ND		ug/kg	6510	--	50	A
Aroclor 1221	ND		ug/kg	6510	--	50	A
Aroclor 1232	ND		ug/kg	6510	--	50	A
Aroclor 1242	ND		ug/kg	6510	--	50	A
Aroclor 1248	ND		ug/kg	6510	--	50	A
Aroclor 1254	103000		ug/kg	6510	--	50	A
Aroclor 1260	ND		ug/kg	6510	--	50	A
Aroclor 1262	ND		ug/kg	6510	--	50	A
Aroclor 1268	ND		ug/kg	6510	--	50	A

Surrogate	% Recovery	Qualifier	Acceptance Criteria	Column
2,4,5,6-Tetrachloro-m-xylene	**0**	Q	30-150	A
Decachlorobiphenyl	**0**	Q	30-150	A
2,4,5,6-Tetrachloro-m-xylene	**0**	Q	30-150	B
Decachlorobiphenyl	**0**	Q	30-150	B

Project Name: NBHS IRA PSWS **Lab Number:** L1325666

Project Number: 115058 **Report Date:** 12/26/13

SAMPLE RESULTS

Lab ID:	L1325666-06	D	Date Collected:	12/17/13 13:45
Client ID:	DRUM #2		Date Received:	12/18/13
Sample Location:	NEW BEDFORD, MA		Field Prep:	Not Specified
Matrix:	Solid		Extraction Method:	EPA 3540C
Analytical Method:	97,8082A		Extraction Date:	12/19/13 01:00
Analytical Date:	12/24/13 09:59		Cleanup Method1:	EPA 3665A
Analyst:	TQ		Cleanup Date1:	12/19/13
Percent Solids:	21%		Cleanup Method2:	EPA 3660B
			Cleanup Date2:	12/19/13

Parameter	Result	Qualifier	Units	RL	MDL	Dilution Factor	Column
MCP Polychlorinated Biphenyls - Westborough Lab							
Aroclor 1016	ND		ug/kg	219000	--	500	A
Aroclor 1221	ND		ug/kg	219000	--	500	A
Aroclor 1232	ND		ug/kg	219000	--	500	A
Aroclor 1242	ND		ug/kg	219000	--	500	A
Aroclor 1248	ND		ug/kg	219000	--	500	A
Aroclor 1254	1390000		ug/kg	219000	--	500	A
Aroclor 1260	ND		ug/kg	219000	--	500	A
Aroclor 1262	ND		ug/kg	219000	--	500	A
Aroclor 1268	ND		ug/kg	219000	--	500	A

Surrogate	% Recovery	Qualifier	Acceptance Criteria	Column
2,4,5,6-Tetrachloro-m-xylene	**0**	Q	30-150	A
Decachlorobiphenyl	**0**	Q	30-150	A
2,4,5,6-Tetrachloro-m-xylene	**0**	Q	30-150	B
Decachlorobiphenyl	**0**	Q	30-150	B

Project Name: NBHS IRA PSWS

Project Number: 115058

Lab Number: L1325666

Report Date: 12/26/13

Method Blank Analysis
Batch Quality Control

Analytical Method: 97,8082A
Analytical Date: 12/19/13 19:42
Analyst: JT

Extraction Method: EPA 3510C
Extraction Date: 12/18/13 19:34
Cleanup Method1: EPA 3665A
Cleanup Date1: 12/19/13
Cleanup Method2: EPA 3660B
Cleanup Date2: 12/19/13

Parameter	Result	Qualifier	Units	RL	MDL	Column
MCP Polychlorinated Biphenyls - Westborough Lab for sample(s): 01-03 Batch: WG660098-1						
Aroclor 1016	ND		ug/l	0.250	--	A
Aroclor 1221	ND		ug/l	0.250	--	A
Aroclor 1232	ND		ug/l	0.250	--	A
Aroclor 1242	ND		ug/l	0.250	--	A
Aroclor 1248	ND		ug/l	0.250	--	A
Aroclor 1254	ND		ug/l	0.250	--	A
Aroclor 1260	ND		ug/l	0.250	--	A
Aroclor 1262	ND		ug/l	0.250	--	A
Aroclor 1268	ND		ug/l	0.250	--	A

Surrogate	%Recovery	Qualifier	Acceptance Criteria	Column
2,4,5,6-Tetrachloro-m-xylene	66		30-150	A
Decachlorobiphenyl	75		30-150	A
2,4,5,6-Tetrachloro-m-xylene	73		30-150	B
Decachlorobiphenyl	80		30-150	B

Project Name: NBHS IRA PSWS

Project Number: 115058

Lab Number: L1325666

Report Date: 12/26/13

Method Blank Analysis
Batch Quality Control

Analytical Method: 97,8082A
Analytical Date: 12/21/13 01:07
Analyst: TQ

Extraction Method: EPA 3540C
Extraction Date: 12/19/13 01:00
Cleanup Method1: EPA 3665A
Cleanup Date1: 12/19/13
Cleanup Method2: EPA 3660B
Cleanup Date2: 12/19/13

Parameter	Result	Qualifier	Units	RL	MDL	Column
MCP Polychlorinated Biphenyls - Westborough Lab for sample(s): 05-06 Batch: WG660140-1						
Aroclor 1016	ND		ug/kg	99.8	--	A
Aroclor 1221	ND		ug/kg	99.8	--	A
Aroclor 1232	ND		ug/kg	99.8	--	A
Aroclor 1242	ND		ug/kg	99.8	--	A
Aroclor 1248	ND		ug/kg	99.8	--	A
Aroclor 1254	ND		ug/kg	99.8	--	A
Aroclor 1260	ND		ug/kg	99.8	--	A
Aroclor 1262	ND		ug/kg	99.8	--	A
Aroclor 1268	ND		ug/kg	99.8	--	A

Surrogate	%Recovery	Qualifier	Acceptance Criteria	Column
2,4,5,6-Tetrachloro-m-xylene	79		30-150	A
Decachlorobiphenyl	57		30-150	A
2,4,5,6-Tetrachloro-m-xylene	78		30-150	B
Decachlorobiphenyl	75		30-150	B

Lab Control Sample Analysis
Batch Quality Control

Project Name: NBHS IRA PSWS
Project Number: 115058

Lab Number: L1325666
Report Date: 12/26/13

Parameter	LCS %Recovery	Qual	LCSD %Recovery	Qual	%Recovery Limits	RPD	Qual	RPD Limits	Column
MCP Polychlorinated Biphenyls - Westborough Lab Associated sample(s): 01-03 Batch: WG660098-2 WG660098-3									
Aroclor 1016	86		86		40-140	1		20	A
Aroclor 1260	77		79		40-140	2		20	A

Surrogate	LCS %Recovery	Qual	LCSD %Recovery	Qual	Acceptance Criteria	Column
2,4,5,6-Tetrachloro-m-xylene	64		64		30-150	A
Decachlorobiphenyl	73		74		30-150	A
2,4,5,6-Tetrachloro-m-xylene	73		71		30-150	B
Decachlorobiphenyl	80		84		30-150	B

Lab Control Sample Analysis
Batch Quality Control

Project Name: NBHS IRA PSWS
Project Number: 115058

Lab Number: L1325666
Report Date: 12/26/13

Parameter	LCS %Recovery	Qual	LCSD %Recovery	Qual	%Recovery Limits	RPD	Qual	RPD Limits	Column
MCP Polychlorinated Biphenyls - Westborough Lab Associated sample(s): 05-06 Batch: WG660140-2 WG660140-3									
Aroclor 1016	88		83		40-140	6		30	A
Aroclor 1260	72		75		40-140	4		30	A

Surrogate	LCS %Recovery	Qual	LCSD %Recovery	Qual	Acceptance Criteria	Column
2,4,5,6-Tetrachloro-m-xylene	81		77		30-150	A
Decachlorobiphenyl	60		59		30-150	A
2,4,5,6-Tetrachloro-m-xylene	77		73		30-150	B
Decachlorobiphenyl	79		77		30-150	B

INORGANICS
&
MISCELLANEOUS

Project Name: NBHS IRA PSWS
Project Number: 115058

Lab Number: L1325666
Report Date: 12/26/13

SAMPLE RESULTS

Lab ID: L1325666-05
Client ID: DRUM #1
Sample Location: NEW BEDFORD, MA
Matrix: Solid

Date Collected: 12/17/13 13:00
Date Received: 12/18/13
Field Prep: Not Specified

Parameter	Result	Qualifier	Units	RL	MDL	Dilution Factor	Date Prepared	Date Analyzed	Analytical Method	Analyst
General Chemistry - Westborough Lab										
Solids, Total	72.0		%	0.100	NA	1	-	12/19/13 01:58	30,2540G	RT

Project Name: NBHS IRA PSWS
Project Number: 115058

Lab Number: L1325666
Report Date: 12/26/13

SAMPLE RESULTS

Lab ID: L1325666-06
Client ID: DRUM #2
Sample Location: NEW BEDFORD, MA
Matrix: Solid

Date Collected: 12/17/13 13:45
Date Received: 12/18/13
Field Prep: Not Specified

Parameter	Result	Qualifier	Units	RL	MDL	Dilution Factor	Date Prepared	Date Analyzed	Analytical Method	Analyst
General Chemistry - Westborough Lab										
Solids, Total	21.2		%	0.100	NA	1	-	12/19/13 01:58	30,2540G	RT

Lab Duplicate Analysis
Batch Quality Control

Project Name: NBHS IRA PSWS
Project Number: 115058

Lab Number: L1325666
Report Date: 12/26/13

Parameter	Native Sample	Duplicate Sample	Units	RPD	Qual	RPD Limits
General Chemistry - Westborough Lab Associated sample(s): 05-06 QC Batch ID: WG660151-1 QC Sample: L1325666-05 Client ID: DRUM #1						
Solids, Total	72.0	73.0	%	1		20

Project Name: NBHS IRA PSWS
Project Number: 115058

Lab Number: L1325666
Report Date: 12/26/13

Sample Receipt and Container Information

Were project specific reporting limits specified? YES

Reagent H2O Preserved Vials Frozen on: NA

Cooler Information Custody Seal

Cooler	
A	Absent
B	Absent

Container Information

Container ID	Container Type	Cooler	pH	Temp deg C	Pres	Seal	Analysis(*)
L1325666-01A	Vial HCl preserved	B	N/A	4.7	Y	Absent	MCP-8260-10(14)
L1325666-01B	Vial HCl preserved	B	N/A	4.7	Y	Absent	MCP-8260-10(14)
L1325666-01C	Vial HCl preserved	B	N/A	4.7	Y	Absent	MCP-8260-10(14)
L1325666-01D	Amber 1000ml unpreserved	A	7	3.6	Y	Absent	MCP-8082-10(365)
L1325666-01E	Amber 1000ml unpreserved	A	7	3.6	Y	Absent	MCP-8082-10(365)
L1325666-01F	Amber 1000ml unpreserved	A	7	3.6	Y	Absent	TPH-DRO-D(7)
L1325666-01G	Amber 1000ml unpreserved	A	7	3.6	Y	Absent	TPH-DRO-D(7)
L1325666-02A	Amber 1000ml unpreserved	A	7	3.6	Y	Absent	FILTER()
L1325666-02B	Amber 1000ml unpreserved	A	7	3.6	Y	Absent	FILTER()
L1325666-02C	Amber 1000ml unpreserved	A	7	3.6	Y	Absent	FILTER()
L1325666-02D	Amber 1000ml unpreserved	A	7	3.6	Y	Absent	FILTER()
L1325666-02W	Amber 1000ml unpreserved split	A	7	3.6	Y	Absent	TPH-DRO-D(7)
L1325666-02X	Amber 1000ml unpreserved split	A	7	3.6	Y	Absent	MCP-8082-10(365)
L1325666-02Y	Amber 1000ml unpreserved split	A	7	3.6	Y	Absent	MCP-8082-10(365)
L1325666-02Z	Amber 1000ml unpreserved split	A	7	3.6	Y	Absent	TPH-DRO-D(7)
L1325666-03A	Vial HCl preserved	B	N/A	4.7	Y	Absent	MCP-8260-10(14)
L1325666-03B	Vial HCl preserved	B	N/A	4.7	Y	Absent	MCP-8260-10(14)
L1325666-03C	Vial HCl preserved	B	N/A	4.7	Y	Absent	MCP-8260-10(14)
L1325666-03D	Amber 1000ml unpreserved	A	7	3.6	Y	Absent	MCP-8082-10(365)
L1325666-03E	Amber 1000ml unpreserved	A	7	3.6	Y	Absent	MCP-8082-10(365)
L1325666-03F	Amber 1000ml unpreserved	A	7	3.6	Y	Absent	MCP-8082-10(365)
L1325666-03G	Amber 1000ml unpreserved	A	7	3.6	Y	Absent	MCP-8082-10(365)
L1325666-04A	Vial HCl preserved	B	N/A	4.7	Y	Absent	MCP-8260-10(14)
L1325666-05A	Amber 250ml unpreserved	A	N/A	3.6	Y	Absent	MCP-8082-10(365),TS(7)
L1325666-06A	Amber 250ml unpreserved	A	N/A	3.6	Y	Absent	-

*Values in parentheses indicate holding time in days

Project Name: NBHS IRA PSWS
Project Number: 115058

Lab Number: L1325666
Report Date: 12/26/13

Container Information

Container ID	Container Type	Cooler	pH	Temp deg C	Pres	Seal	Analysis(*)

Container Comments

L1325666-02A

L1325666-02B

L1325666-02C

L1325666-02D

*Values in parentheses indicate holding time in days

Project Name:	NBHS IRA PSWS	**Lab Number:**	L1325666
Project Number:	115058	**Report Date:**	12/26/13

GLOSSARY

Acronyms

EDL	- Estimated Detection Limit: This value represents the level to which target analyte concentrations are reported as estimated values, when those target analyte concentrations are quantified below the reporting limit (RL). The EDL includes any adjustments from dilutions, concentrations or moisture content, where applicable. The use of EDLs is specific to the analysis of PAHs using Solid-Phase Microextraction (SPME).
EPA	- Environmental Protection Agency.
LCS	- Laboratory Control Sample: A sample matrix, free from the analytes of interest, spiked with verified known amounts of analytes or a material containing known and verified amounts of analytes.
LCSD	- Laboratory Control Sample Duplicate: Refer to LCS.
LFB	- Laboratory Fortified Blank: A sample matrix, free from the analytes of interest, spiked with verified known amounts of analytes or a material containing known and verified amounts of analytes.
MDL	- Method Detection Limit: This value represents the level to which target analyte concentrations are reported as estimated values, when those target analyte concentrations are quantified below the reporting limit (RL). The MDL includes any adjustments from dilutions, concentrations or moisture content, where applicable.
MS	- Matrix Spike Sample: A sample prepared by adding a known mass of target analyte to a specified amount of matrix sample for which an independent estimate of target analyte concentration is available.
MSD	- Matrix Spike Sample Duplicate: Refer to MS.
NA	- Not Applicable.
NC	- Not Calculated: Term is utilized when one or more of the results utilized in the calculation are non-detect at the parameter's reporting unit.
NI	- Not Ignitable.
RL	- Reporting Limit: The value at which an instrument can accurately measure an analyte at a specific concentration. The RL includes any adjustments from dilutions, concentrations or moisture content, where applicable.
RPD	- Relative Percent Difference: The results from matrix and/or matrix spike duplicates are primarily designed to assess the precision of analytical results in a given matrix and are expressed as relative percent difference (RPD). Values which are less than five times the reporting limit for any individual parameter are evaluated by utilizing the absolute difference between the values; although the RPD value will be provided in the report.
SRM	- Standard Reference Material: A reference sample of a known or certified value that is of the same or similar matrix as the associated field samples.

Footnotes

1	- The reference for this analyte should be considered modified since this analyte is absent from the target analyte list of the original method.

Terms

Analytical Method: Both the document from which the method originates and the analytical reference method. (Example: EPA 8260B is shown as 1,8260B.) The codes for the reference method documents are provided in the References section of the Addendum.

Data Qualifiers

A	- Spectra identified as "Aldol Condensation Product".
B	- The analyte was detected above the reporting limit in the associated method blank. Flag only applies to associated field samples that have detectable concentrations of the analyte at less than ten times (10x) the concentration found in the blank. For MCP-related projects, flag only applies to associated field samples that have detectable concentrations of the analyte at less than ten times (10x) the concentration found in the blank. For DOD-related projects, flag only applies to associated field samples that have detectable concentrations of the analyte at less than ten times (10x) the concentration found in the blank AND the analyte was detected above one-half the reporting limit (or above the reporting limit for common lab contaminants) in the associated method blank. For NJ-Air-related projects, flag only applies to associated field samples that have detectable concentrations of the analyte above the reporting limit.
C	- Co-elution: The target analyte co-elutes with a known lab standard (i.e. surrogate, internal standards, etc.) for co-extracted analyses.
D	- Concentration of analyte was quantified from diluted analysis. Flag only applies to field samples that have detectable concentrations of the analyte.
E	- Concentration of analyte exceeds the range of the calibration curve and/or linear range of the instrument.
G	- The concentration may be biased high due to matrix interferences (i.e, co-elution) with non-target compound(s). The result should be considered estimated.
H	- The analysis of pH was performed beyond the regulatory-required holding time of 15 minutes from the time of sample collection.
I	- The lower value for the two columns has been reported due to obvious interference.

Report Format: Data Usability Report

Project Name:	NBHS IRA PSWS	**Lab Number:**	L1325666
Project Number:	115058	**Report Date:**	12/26/13

Data Qualifiers

M - Reporting Limit (RL) exceeds the MCP CAM Reporting Limit for this analyte.

NJ - Presumptive evidence of compound. This represents an estimated concentration for Tentatively Identified Compounds (TICs), where the identification is based on a mass spectral library search.

P - The RPD between the results for the two columns exceeds the method-specified criteria.

Q - The quality control sample exceeds the associated acceptance criteria. For DOD-related projects, LCS and/or Continuing Calibration Standard exceedences are also qualified on all associated sample results. Note: This flag is not applicable for matrix spike recoveries when the sample concentration is greater than 4x the spike added or for batch duplicate RPD when the sample concentrations are less than 5x the RL. (Metals only.)

R - Analytical results are from sample re-analysis.

RE - Analytical results are from sample re-extraction.

S - Analytical results are from modified screening analysis.

Report Format: Data Usability Report

Project Name: NBHS IRA PSWS **Lab Number:** L1325666
Project Number: 115058 **Report Date:** 12/26/13

REFERENCES

1 Test Methods for Evaluating Solid Waste: Physical/Chemical Methods. EPA SW-846. Third Edition. Updates I - IV, 2007.

30 Standard Methods for the Examination of Water and Wastewater. APHA-AWWA-WPCF. 18th Edition. 1992.

97 EPA Test Methods (SW-846) with QC Requirements & Performance Standards for the Analysis of EPA SW-846 Methods under the Massachusetts Contingency Plan, WSC-CAM-IIA, IIB, IIIA, IIIB, IIIC, IIID, VA, VB, VC, VIA, VIB, VIIIA and VIIIB, July 2010.

LIMITATION OF LIABILITIES

Alpha Analytical performs services with reasonable care and diligence normal to the analytical testing laboratory industry. In the event of an error, the sole and exclusive responsibility of Alpha Analytical shall be to re-perform the work at it's own expense. In no event shall Alpha Analytical be held liable for any incidental, consequential or special damages, including but not limited to, damages in any way connected with the use of, interpretation of, information or analysis provided by Alpha Analytical.

We strongly urge our clients to comply with EPA protocol regarding sample volume, preservation, cooling, containers, sampling procedures, holding time and splitting of samples in the field.

Certification Information

Last revised December 11, 2013

The following analytes are not included in our NELAP Scope of Accreditation:

Westborough Facility
EPA 524.2: Acetone, 2-Butanone (Methyl ethyl ketone (MEK)), Tert-butyl alcohol, 2-Hexanone, Tetrahydrofuran, 1,3,5-Trichlorobenzene, 4-Methyl-2-pentanone (MIBK), Carbon disulfide, Diethyl ether.
EPA 8260C: 1,2,4,5-Tetramethylbenzene, 4-Ethyltoluene, Iodomethane (methyl iodide), Methyl methacrylate, Azobenzene.
EPA 8330A/B: PETN, Picric Acid, Nitroglycerine, 2,6-DANT, 2,4-DANT.
EPA 8270D: 1-Methylnaphthalene, Dimethylnaphthalene,1,4-Diphenylhydrazine.
EPA 625: 4-Chloroaniline, 4-Methylphenol.
SM4500: Soil: Total Phosphorus, TKN, NO2, NO3.
EPA 9071: Total Petroleum Hydrocarbons, Oil & Grease.

Mansfield Facility
EPA 8270D: Biphenyl.
EPA TO-15: Halothane, 2,4,4-Trimethyl-2-pentene, 2,4,4-Trimethyl-1-pentene, Thiophene, 2-Methylthiophene, 3-Methylthiophene, 2-Ethylthiophene, 1,2,3-Trimethylbenzene, Indan, Indene, 1,2,4,5-Tetramethylbenzene, Benzothiophene, 1-Methylnaphthalene.

The following analytes are included in our Massachusetts DEP Scope of Accreditation, Westborough Facility:

Drinking Water
EPA 200.8: Sb,As,Ba,Be,Cd,Cr,Cu,Pb,Ni,Se,Tl; **EPA 200.7**: Ba,Be,Ca,Cd,Cr,Cu,Na; **EPA 245.1:** Mercury;
EPA 300.0: Nitrate-N, Fluoride, Sulfate; **EPA 353.2**: Nitrate-N, Nitrite-N; **SM4500NO3-F**: Nitrate-N, Nitrite-N; **SM4500F-C, SM4500CN-CE, EPA 180.1, SM2130B, SM4500Cl-D, SM2320B, SM2540C, SM4500H-B**
EPA 332: Perchlorate.
Microbiology: **SM9215B; SM9223-P/A, SM9223B-Colilert-QT, Enterolert-QT.**

Non-Potable Water
EPA 200.8: Al,Sb,As,Be,Cd,Cr,Cu,Pb,Mn,Ni,Se,Ag,Tl,Zn;
EPA 200.7: Al,Sb,As,Be,Cd,Ca,Cr,Co,Cu,Fe,Pb,Mg,Mn,Mo,Ni,K,Se,Ag,Na,Sr,Ti,Tl,V,Zn;
EPA 245.1, SM4500H,B, EPA 120.1, SM2510B, SM2540C, SM2340B, SM2320B, SM4500CL-E, SM4500F-BC, SM426C, SM4500NH3-BH, **EPA 350.1**: Ammonia-N, **LACHAT 10-107-06-1-B**: Ammonia-N, **SM4500NO3-F,**
EPA 353.2: Nitrate-N**, SM4500NH3-BC-NES, EPA 351.1, SM4500P-E, SM4500P-B, E, SM5220D, EPA 410.4, SM5210B, SM5310C, SM4500CL-D, EPA 1664, SM14 510AC, EPA 420.1, SM4500-CN-CE, SM2540D.**
EPA 624: Volatile Halocarbons & Aromatics,
EPA 608: Chlordane, Toxaphene, Aldrin, alpha-BHC, beta-BHC, gamma-BHC, delta-BHC, Dieldrin, DDD, DDE, DDT, Endosulfan I, Endosulfan II, Endosulfan sulfate, Endrin, Endrin Aldehyde, Heptachlor, Heptachlor Epoxide, PCBs
EPA 625: SVOC (Acid/Base/Neutral Extractables), **EPA 600/4-81-045**: PCB-Oil.
Microbiology: **SM9223B-Colilert-QT; Enterolert-QT, SM9222D-MF**.

For a complete listing of analytes and methods, please contact your Alpha Project Manager.

CHAIN OF CUSTODY

PAGE ____ OF ____

ALPHA ANALYTICAL
World Class Chemistry
8 Walkup Drive, Westboro, MA 01581, Tel: 508-898-9220
320 Forbes Blvd, Mansfield, MA 02048, Tel: 508-822-9300

Date Rec'd In Lab: 12/18/13

ALPHA Job #: L1325666

Project Information

Project Name: NBHS IRA PSWS
Project Location: New Bedford, MA
Project #: 115058
Project Manager: David Sullivan
ALPHA Quote #:

Report Information - Data Deliverables

☐ ADEx ☒ EMAIL

Billing Information

☐ Same as Client info PO #: C115058

Client Information

Client: TRC
Address: 650 Suffolk St. Lowell, MA 01854
Phone: (978) 970-5600
Email: aleonard dsullivan@trcsolutions.com

Regulatory Requirements & Project Information Requirements

☒ Yes ☐ No MA MCP Analytical Methods ☐ Yes ☐ No CT RCP Analytical Methods
☐ Yes ☐ No Matrix Spike Required on this SDG? (Required for MCP Inorganics)
☐ Yes ☐ No GW1 Standards (Info Required for Metals & EPH with Targets)
☐ Yes ☐ No NPDES RGP
☐ Other State /Fed Program MA Criteria MCP

Turn-Around Time

☒ Standard ☐ RUSH (only confirmed if pre-approved!)
Date Due: 5-day 12/26/13

Additional Project Information:

★ Influent PCB + TPH to be filtered by lab using 0.2 µm filter.
↳ TPH detection limit to be <200 ppb.
▲ Drum #1 and Drum #2 do not require Soxhlet extraction.

ANALYSIS: VOC: ☒ 8260 ☐ 624 ☐ 524.2; SVOC: ☐ ABN ☐ PAH; METALS: ☐ MCP 13 ☐ MCP 14 ☐ RCP 15; METALS: ☐ RCRA5 ☐ RCRA8 ☐ PP13; EPH: ☐ Ranges & Targets ☐ Ranges Only; VPH: ☐ Ranges & Targets ☐ Ranges Only; ☒ PCB ☐ PEST; TPH: ☒ Quant Only ☐ Fingerprint; PCB (0.2 µm filtered) ★; TPH (0.2 µm filtered) ★

SAMPLE INFO: Filtration ☐ Field ☒ Lab to do; Preservation ☐ Lab to do

ALPHA Lab ID (Lab Use Only)	Sample ID	Collection Date	Collection Time	Sample Matrix	Sampler Initials	VOC						PCB	TPH	PCB (0.2 µm filtered) ★	TPH (0.2 µm filtered) ★				Sample Comments	TOTAL # BOTTLES
25666 -01	INFLUENT	12/17/13	0949	I	RI	X						X	X	X	X				<200 ppb detection limit for TPH	11
-02	EFFLUENT	12/17/13	0958	E	RI	X						X								5
-03	TRIP BLANK					X														
-04	Drum #1▲	12/17/13	1300	Call Liz Simmons for Matrix								X								
-05	Drum #2▲	12/17/13	1345									X								

Container Type	V							A	A	A	A				
Preservative	B							A	A	A	A				

Container Type
P= Plastic
A= Amber glass
V= Vial
G= Glass
B= Bacteria cup
C= Cube
O= Other
E= Encore
D= BOD Bottle

Preservative
A= None
B= HCl
C= HNO_3
D= H_2SO_4
E= NaOH
F= MeOH
G= $NaHSO_4$
H = $Na_2S_2O_3$
I= Ascorbic Acid
J = NH_4Cl
K= Zn Acetate
O= Other

Relinquished By:	Date/Time	Received By:	Date/Time
Kyom John	12/18/13 10:22	Dan Beck	12/18/13 10:22

All samples submitted are subject to Alpha's Terms and Conditions. See reverse side.

FORM NO: 01-01 (rev. 12-Mar-2012)

7A
Volatile Organics CONTINUING CALIBRATION CHECK

Lab Name: Alpha Analytical Labs

SDG No.: L1325666

Instrument ID: Quimby.i Calibration Date: 23-DEC-2013 Time: 05:42

Lab File ID: 1223A02 Init. Calib. Date(s): 21-DEC-2 21-DEC-2

Sample No: 8260 CCAL Init. Calib. Times : 17:04 20:13

Compound	RRF	RRF	MIN RRF	%D	MAX %D	
dichlorodifluoromethane	.35778	.39655	.1	-11	20	
chloromethane	.55506	.57263	.1	-3	20	
vinyl chloride	.56939	.59977	.1	-5	20	
bromomethane	.33999	.33837	.1	0	20	
chloroethane	.35909	.37438	.1	-4	20	
trichlorofluoromethane	.63688	.64866	.1	-2	20	
ethyl ether	.1843	.19561	.05	-6	20	
acrolein	.05569	.05576	.05	0	20	
freon-113	.38903	.42301	.1	-9	20	
acetone	.08811	.10991	.1	-25	20	F
1,1,-dichloroethene	.36922	.39363	.1	-7	20	
tert-butyl alcohol	500	493	.05	1	20	
iodomethane	.36512	.31542	.05	14	20	
methyl acetate	.16993	.17168	.01	-1	20	
methylene chloride	.43413	.44202	.1	-2	20	
carbon disulfide	1.1533	1.1232	.1	3	20	
acrylonitrile	.09927	.10253	.05	-3	20	
methyl tert butyl ether	.6119	.68027	.1	-11	20	
Halothane	.31273	.33238	.05	-6	20	
trans-1,2-dichloroethene	.40679	.43246	.1	-6	20	
Diisopropyl Ether	1.3181	1.3764	.05	-4	20	
vinyl acetate	100	97.729	.05	2	20	
1,1-dichloroethane	.75596	.79404	.2	-5	20	
Ethyl-Tert-Butyl-Ether	.84041	.96221	.05	-14	20	
2-butanone	.10266	.11258	.1	-10	20	
2,2-dichloropropane	100	111	.05	-11	20	
ethyl acetate	.22846	.23268	.05	-2	20	
cis-1,2-dichloroethene	.45207	.4619	.1	-2	20	
chloroform	.703	.73755	.2	-5	20	
bromochloromethane	.18162	.19415	.05	-7	20	
tetrahydrofuran	.06852	.06597	.05	4	20	
1,1,1-trichloroethane	.52952	.58231	.1	-10	20	
cyclohexane	.84779	.89507	.01	-6	30	
1,1-dichloropropene	.57625	.61275	.05	-6	20	
carbontetrachloride	100	90.805	.1	9	20	
Tertiary-Amyl Methyl Ether	100	110	.05	-10	20	
1,2-dichloroethane	.47638	.49517	.1	-4	20	
benzene	1.7286	1.8240	.5	-6	20	

FORM VII MCP-8260-10

7A
CONTINUING CALIBRATION CHECK

Lab Name: Alpha Analytical Labs

SDG No.: L1325666

Instrument ID: Quimby.i Calibration Date: 23-DEC-2013 Time: 05:42

Lab File ID: 1223A02 Init. Calib. Date(s): 21-DEC-2 21-DEC-2

Sample No: 8260 CCAL Init. Calib. Times : 17:04 20:13

Compound	$\overline{RRF}$	RRF	MIN RRF	%D	MAX %D	
trichloroethene	.41357	.43602	.2	-5	20	
methyl cyclohexane	.73553	.80265	.01	-9	30	
1,2-dichloropropane	.42692	.44855	.1	-5	20	
bromodichloromethane	.47774	.49222	.2	-3	20	
1,4-dioxane	.00264	.00239	.05	10	20	F
dibromomethane	.19285	.20108	.05	-4	20	
2-chloroethylvinyl ether	.05073	.06206	.05	-22	20	F
4-methyl-2-pentanone	.09004	.09283	.1	-3	20	F
cis-1,3-dichloropropene	100	102	.2	-2	20	
toluene	1.3546	1.4131	.4	-4	20	
ethyl-methacrylate	100	102	.01	-2	0	F
trans-1,3-dichloropropene	100	98.680	.1	1	20	
2-hexanone	.18354	.18942	.1	-3	20	
1,1,2-trichloroethane	.27883	.29554	.1	-6	20	
1,3-dichloropropane	.60059	.63663	.05	-6	20	
tetrachloroethene	.59429	.64066	.2	-8	20	
chlorodibromomethane	.37178	.37355	.1	0	20	
1,2-dibromoethane	.29775	.30775	.1	-3	20	
chlorobenzene	1.4594	1.5374	.5	-5	20	
1,1,1,2-tetrachloroethane	100	99	.05	1	20	
ethyl benzene	2.6362	2.8801	.1	-9	20	
p/m xylene	1.1379	1.1699	.1	-3	20	
o xylene	1.0637	1.1077	.3	-4	20	
styrene	1.6288	1.8108	.31	-11	20	
isopropylbenzene	2.7116	2.9994	.1	-11	20	
bromoform	100	99	.1	1	20	
1,4-dichlorobutane	1.0881	1.1132	.01	-2	30	
1,1,2,2,-tetrachloroethane	.67753	.70772	.3	-4	20	
1,2,3-trichloropropane	.514	.53851	.05	-5	20	
trans-1,4-dichloro-2-butene	.20047	.18041	.05	10	20	
n-propylbenzene	5.1590	5.7393	.05	-11	20	
bromobenzene	1.1134	1.1764	.05	-6	20	
4-ethyltoluene	2.3765	2.6787	.05	-13	20	
1,3,5-trimethybenzene	3.9832	4.2791	.05	-7	20	
2-chlorotoluene	3.7248	3.8786	.05	-4	20	
4-chorotoluene	3.3375	3.5444	.05	-6	20	
tert-butylbenzene	3.5155	3.7489	.05	-7	20	
1,2,4-trimethylbenzene	3.758	4.0665	.05	-8	20	

FORM VII MCP-8260-10

7A
CONTINUING CALIBRATION CHECK

Lab Name: Alpha Analytical Labs

SDG No.: L1325666

Instrument ID: Quimby.i Calibration Date: 23-DEC-2013 Time: 05:42

Lab File ID: 1223A02 Init. Calib. Date(s): 21-DEC-2 21-DEC-2

Sample No: 8260 CCAL Init. Calib. Times : 17:04 20:13

Compound	$\overline{RRF}$	RRF	MIN RRF	%D	MAX %D
sec-butylbenzene	5.0101	5.5988	.05	-12	20
p-isopropyltoluene	4.2069	4.6744	.05	-11	20
1,3-dichlorobenzene	2.2639	2.3743	.6	-5	20
1,4-dichlorobenzene	2.2226	2.3412	.5	-5	20
n-butylbenzene	4.4183	4.7305	.05	-7	20
1,2,4,5-tetramethylbenezene	1.2943	1.3559	.05	-5	20
1,2-dichlorobenzene	1.9862	2.0907	.4	-5	20
p-diethylbenzene	1.6487	1.8123	.05	-10	20
1,2-dibromo-3-chloropropane	100	98.315	.05	2	20
1,3,5-trichlorobenzene	1.4116	1.4991	.01	-6	30
1,2,4-trichlorobenzene	1.1168	1.1421	.2	-2	20
hexachlorobutadiene	.49694	.52613	.05	-6	20
naphthalene	1.8020	1.8759	.05	-4	20
1,2,3-trichlorobenzene	.86324	.88076	.05	-2	20
dibromofluoromethane	.23485	.23694	.05	-1	20
1,2-dichloroethane-d4	.24724	.24513	.05	1	20
toluene-d8	1.1848	1.1894	.05	0	20
4-bromofluorobenzene	.84462	.83144	.05	2	20

FORM VII MCP-8260-10

ANALYTICAL REPORT

Lab Number:	L1401583
Client:	TRC Environmental Consultants Wannalancit Mills 650 Suffolk Street Lowell, MA 01854
ATTN:	David Sullivan
Phone:	(978) 656-3565
Project Name:	NBHS IRA PSWS
Project Number:	115058
Report Date:	04/01/14

The original project report/data package is held by Alpha Analytical. This report/data package is paginated and should be reproduced only in its entirety. Alpha Analytical holds no responsibility for results and/or data that are not consistent with the original.

Certifications & Approvals: MA (M-MA086), NY (11148), CT (PH-0574), NH (2003), NJ NELAP (MA935), RI (LAO00065), ME (MA00086), PA (68-03671), USDA (Permit #P-330-11-00240), NC (666), TX (T104704476), DOD (L2217), US Army Corps of Engineers.

Eight Walkup Drive, Westborough, MA 01581-1019
508-898-9220 (Fax) 508-898-9193 800-624-9220 - www.alphalab.com

Project Name: NBHS IRA PSWS
Project Number: 115058

Lab Number: L1401583
Report Date: 04/01/14

Alpha Sample ID	Client ID	Sample Location	Collection Date/Time
L1401583-01	INFLUENT	NEW BEDFORD, MA	01/16/14 12:30
L1401583-02	INFLUENT (FILTERED)	NEW BEDFORD, MA	01/16/14 12:30
L1401583-03	EFFLUENT	NEW BEDFORD, MA	01/16/14 12:50
L1401583-04	TRIP BLANK	NEW BEDFORD, MA	01/16/14 00:00

Project Name: NBHS IRA PSWS **Lab Number:** L1401583

Project Number: 115058 **Report Date:** 04/01/14

MADEP MCP Response Action Analytical Report Certification

This form provides certifications for all samples performed by MCP methods. Please refer to the Sample Results and Container Information sections of this report for specification of MCP methods used for each analysis. The following questions pertain only to MCP Analytical Methods.

An affirmative response to questions A through F is required for "Presumptive Certainty" status		
A	Were all samples received in a condition consistent with those described on the Chain-of-Custody, properly preserved (including temperature) in the field or laboratory, and prepared/analyzed within method holding times?	YES
B	Were the analytical method(s) and all associated QC requirements specified in the selected CAM protocol(s) followed?	YES
C	Were all required corrective actions and analytical response actions specified in the selected CAM protocol(s) implemented for all identified performance standard non-conformances?	YES
D	Does the laboratory report comply with all the reporting requirements specified in CAM VII A, "Quality Assurance and Quality Control Guidelines for the Acquisition and Reporting of Analytical Data?"	YES
E a.	VPH, EPH, and APH Methods only: Was each method conducted without significant modification(s)? (Refer to the individual method(s) for a list of significant modifications).	N/A
E b.	APH and TO-15 Methods only: Was the complete analyte list reported for each method?	N/A
F	Were all applicable CAM protocol QC and performance standard non-conformances identified and evaluated in a laboratory narrative (including all "No" responses to Questions A through E)?	YES

A response to questions G, H and I is required for "Presumptive Certainty" status		
G	Were the reporting limits at or below all CAM reporting limits specified in the selected CAM protocol(s)?	NO
H	Were all QC performance standards specified in the CAM protocol(s) achieved?	NO
I	Were results reported for the complete analyte list specified in the selected CAM protocol(s)?	YES

For any questions answered "No", please refer to the case narrative section on the following page(s).

Please note that sample matrix information is located in the Sample Results section of this report.

Project Name: NBHS IRA PSWS **Lab Number:** L1401583
Project Number: 115058 **Report Date:** 04/01/14

Case Narrative

The samples were received in accordance with the Chain of Custody and no significant deviations were encountered during the preparation or analysis unless otherwise noted. Sample Receipt, Container Information, and the Chain of Custody are located at the back of the report.

Results contained within this report relate only to the samples submitted under this Alpha Lab Number and meet all of the requirements of NELAC, for all NELAC accredited parameters. The data presented in this report is organized by parameter (i.e. VOC, SVOC, etc.). Sample specific Quality Control data (i.e. Surrogate Spike Recovery) is reported at the end of the target analyte list for each individual sample, followed by the Laboratory Batch Quality Control at the end of each parameter. If a sample was re-analyzed or re-extracted due to a required quality control corrective action and if both sets of data are reported, the Laboratory ID of the re-analysis or re-extraction is designated with an "R" or "RE", respectively. When multiple Batch Quality Control elements are reported (e.g. more than one LCS), the associated samples for each element are noted in the grey shaded header line of each data table. Any Laboratory Batch, Sample Specific % recovery or RPD value that is outside the listed Acceptance Criteria is bolded in the report. Performance criteria for CAM and RCP methods allow for some LCS compound failures to occur and still be within method compliance. In these instances, the specific failures are not narrated but are noted in the associated QC table. This information is also incorporated in the Data Usability format for our Data Merger tool where it can be reviewed along with any associated usability implications. Soil/sediments, solids and tissues are reported on a dry weight basis unless otherwise noted. Definitions of all data qualifiers and acronyms used in this report are provided in the Glossary located at the back of the report.

In reference to questions H (CAM) or 4 (RCP) when "NO" is checked, the performance criteria for CAM and RCP methods allow for some quality control failures to occur and still be within method compliance. In these instances the specific failure is not narrated but noted in the associated QC table. The information is also incorporated in the Data Usability format of our Data Merger tool where it can be reviewed along with any associated usability implications.

Please see the associated ADEx data file for a comparison of laboratory reporting limits that were achieved with the regulatory Numerical Standards requested on the Chain of Custody.

HOLD POLICY
For samples submitted on hold, Alpha's policy is to hold samples (with the exception of Air canisters) free of charge for 21 calendar days from the date the project is completed. After 21 calendar days, we will dispose of all samples submitted including those put on hold unless you have contacted your Client Service Representative and made arrangements for Alpha to continue to hold the samples. Air canisters will be disposed after 3 business days from the date the project is completed.

Please contact Client Services at 800-624-9220 with any questions.

Project Name: NBHS IRA PSWS **Lab Number:** L1401583
Project Number: 115058 **Report Date:** 04/01/14

Case Narrative (continued)

Report Submission

This report replaces the report issued on January 23, 2014. Due to a laboratory oversight, L1401726-02 was improperly filtered for PCBs. PCB results for this sample have been removed.

MCP Related Narratives

Volatile Organics

L1401583-01: The Effluent results are greater than the Influent results. The sample containers were verified as being labeled correctly by the laboratory, and the reported results were confirmed by the screen analysis results.

L1401583-03 has elevated detection limits due to the dilution required by the elevated concentrations of target compounds in the sample.

In reference to question G:

L1401583-03: All of the target analytes, with the exception of trans-1,2-Dichloroethene, cis-1,2-Dichloroethene, Tetrahydrofuran, did not achieve the requested CAM reporting limits.

In reference to question H:

The initial calibration, associated with L1401583-01, -03, and -04, did not meet the method required minimum response factor on the lowest calibration standard for 2-butanone (0.08842), 4-methyl-2-pentanone (0.06510), and 1,4-dioxane (0.00253), as well as the average response factor for acetone, 2-butanone, 4-methyl-2-pentanone, and 1,4-dioxane. In addition, a quadratic fit was utilized for carbon tetrachloride, cis-1,3-dichloropropene, bromoform, 2,2-dichloropropane, 1,1,1,2-tetrachloroethane, 1,2-dibromo-3-chloropropane, tertiary-amyl-methyl-ether, and vinyl acetate.

The continuing calibration standard, associated with L1401583-01, -03, and -04, is outside the acceptance criteria for several compounds; however, it is within overall method allowances. A copy of the continuing calibration standard is included as an addendum to this report.

PCBs

L1401583-01 has elevated detection limits due to the dilution required by the elevated concentrations of target compounds in the samples.

Project Name:	NBHS IRA PSWS	**Lab Number:**	L1401583
Project Number:	115058	**Report Date:**	04/01/14

Case Narrative (continued)

In reference to question G:

L1401583-01: All of the target analytes, with the exception of Aroclor 1254, did not achieve the requested CAM reporting limits.

I, the undersigned, attest under the pains and penalties of perjury that, to the best of my knowledge and belief and based upon my personal inquiry of those responsible for providing the information contained in this analytical report, such information is accurate and complete. This certificate of analysis is not complete unless this page accompanies any and all pages of this report.

Authorized Signature: Cynthia McQueen

Title: Technical Director/Representative

Date: 04/01/14

ORGANICS

VOLATILES

Project Name: NBHS IRA PSWS **Lab Number:** L1401583

Project Number: 115058 **Report Date:** 04/01/14

SAMPLE RESULTS

Lab ID:	L1401583-01	Date Collected:	01/16/14 12:30
Client ID:	INFLUENT	Date Received:	01/16/14
Sample Location:	NEW BEDFORD, MA	Field Prep:	Not Specified
Matrix:	Water		
Analytical Method:	97,8260C		
Analytical Date:	01/20/14 09:47		
Analyst:	MM		

Parameter	Result	Qualifier	Units	RL	MDL	Dilution Factor
MCP Volatile Organics - Westborough Lab						
Methylene chloride	ND		ug/l	2.0	--	1
1,1-Dichloroethane	ND		ug/l	1.0	--	1
Chloroform	ND		ug/l	1.0	--	1
Carbon tetrachloride	ND		ug/l	1.0	--	1
1,2-Dichloropropane	ND		ug/l	1.0	--	1
Dibromochloromethane	ND		ug/l	1.0	--	1
1,1,2-Trichloroethane	ND		ug/l	1.0	--	1
Tetrachloroethene	ND		ug/l	1.0	--	1
Chlorobenzene	ND		ug/l	1.0	--	1
Trichlorofluoromethane	ND		ug/l	2.0	--	1
1,2-Dichloroethane	ND		ug/l	1.0	--	1
1,1,1-Trichloroethane	ND		ug/l	1.0	--	1
Bromodichloromethane	ND		ug/l	1.0	--	1
trans-1,3-Dichloropropene	ND		ug/l	0.50	--	1
cis-1,3-Dichloropropene	ND		ug/l	0.50	--	1
1,1-Dichloropropene	ND		ug/l	2.0	--	1
Bromoform	ND		ug/l	2.0	--	1
1,1,2,2-Tetrachloroethane	ND		ug/l	1.0	--	1
Benzene	ND		ug/l	0.50	--	1
Toluene	1.4		ug/l	1.0	--	1
Ethylbenzene	ND		ug/l	1.0	--	1
Chloromethane	ND		ug/l	2.0	--	1
Bromomethane	ND		ug/l	2.0	--	1
Vinyl chloride	26		ug/l	1.0	--	1
Chloroethane	ND		ug/l	2.0	--	1
1,1-Dichloroethene	ND		ug/l	1.0	--	1
trans-1,2-Dichloroethene	12		ug/l	1.0	--	1
Trichloroethene	1.9		ug/l	1.0	--	1
1,2-Dichlorobenzene	ND		ug/l	1.0	--	1
1,3-Dichlorobenzene	1.7		ug/l	1.0	--	1
1,4-Dichlorobenzene	6.5		ug/l	1.0	--	1

Project Name: NBHS IRA PSWS **Lab Number:** L1401583

Project Number: 115058 **Report Date:** 04/01/14

SAMPLE RESULTS

Lab ID: L1401583-01 Date Collected: 01/16/14 12:30

Client ID: INFLUENT Date Received: 01/16/14

Sample Location: NEW BEDFORD, MA Field Prep: Not Specified

Parameter	Result	Qualifier	Units	RL	MDL	Dilution Factor
MCP Volatile Organics - Westborough Lab						
Methyl tert butyl ether	ND		ug/l	2.0	--	1
p/m-Xylene	ND		ug/l	2.0	--	1
o-Xylene	ND		ug/l	1.0	--	1
cis-1,2-Dichloroethene	28		ug/l	1.0	--	1
Dibromomethane	ND		ug/l	2.0	--	1
1,2,3-Trichloropropane	ND		ug/l	2.0	--	1
Styrene	ND		ug/l	1.0	--	1
Dichlorodifluoromethane	ND		ug/l	2.0	--	1
Acetone	ND		ug/l	5.0	--	1
Carbon disulfide	ND		ug/l	2.0	--	1
2-Butanone	ND		ug/l	5.0	--	1
4-Methyl-2-pentanone	ND		ug/l	5.0	--	1
2-Hexanone	ND		ug/l	5.0	--	1
Bromochloromethane	ND		ug/l	2.0	--	1
Tetrahydrofuran	ND		ug/l	2.0	--	1
2,2-Dichloropropane	ND		ug/l	2.0	--	1
1,2-Dibromoethane	ND		ug/l	2.0	--	1
1,3-Dichloropropane	ND		ug/l	2.0	--	1
1,1,1,2-Tetrachloroethane	ND		ug/l	1.0	--	1
Bromobenzene	ND		ug/l	2.0	--	1
n-Butylbenzene	ND		ug/l	2.0	--	1
sec-Butylbenzene	ND		ug/l	2.0	--	1
tert-Butylbenzene	ND		ug/l	2.0	--	1
o-Chlorotoluene	ND		ug/l	2.0	--	1
p-Chlorotoluene	ND		ug/l	2.0	--	1
1,2-Dibromo-3-chloropropane	ND		ug/l	2.0	--	1
Hexachlorobutadiene	ND		ug/l	0.60	--	1
Isopropylbenzene	ND		ug/l	2.0	--	1
p-Isopropyltoluene	ND		ug/l	2.0	--	1
Naphthalene	ND		ug/l	2.0	--	1
n-Propylbenzene	ND		ug/l	2.0	--	1
1,2,3-Trichlorobenzene	ND		ug/l	2.0	--	1
1,2,4-Trichlorobenzene	4.5		ug/l	2.0	--	1
1,3,5-Trimethylbenzene	ND		ug/l	2.0	--	1
1,2,4-Trimethylbenzene	ND		ug/l	2.0	--	1
Ethyl ether	ND		ug/l	2.0	--	1
Isopropyl Ether	ND		ug/l	2.0	--	1
Ethyl-Tert-Butyl-Ether	ND		ug/l	2.0	--	1
Tertiary-Amyl Methyl Ether	ND		ug/l	2.0	--	1

Project Name: NBHS IRA PSWS **Lab Number:** L1401583

Project Number: 115058 **Report Date:** 04/01/14

SAMPLE RESULTS

Lab ID:	L1401583-01	Date Collected:	01/16/14 12:30
Client ID:	INFLUENT	Date Received:	01/16/14
Sample Location:	NEW BEDFORD, MA	Field Prep:	Not Specified

Parameter	Result	Qualifier	Units	RL	MDL	Dilution Factor
MCP Volatile Organics - Westborough Lab						
1,4-Dioxane	ND		ug/l	250	--	1

Surrogate	% Recovery	Qualifier	Acceptance Criteria
1,2-Dichloroethane-d4	96		70-130
Toluene-d8	97		70-130
4-Bromofluorobenzene	91		70-130
Dibromofluoromethane	101		70-130

Project Name: NBHS IRA PSWS **Lab Number:** L1401583

Project Number: 115058 **Report Date:** 04/01/14

SAMPLE RESULTS

Lab ID:	L1401583-03 D	Date Collected:	01/16/14 12:50
Client ID:	EFFLUENT	Date Received:	01/16/14
Sample Location:	NEW BEDFORD, MA	Field Prep:	Not Specified
Matrix:	Water		
Analytical Method:	97,8260C		
Analytical Date:	01/20/14 10:19		
Analyst:	MM		

Parameter	Result	Qualifier	Units	RL	MDL	Dilution Factor
MCP Volatile Organics - Westborough Lab						
Methylene chloride	ND		ug/l	10	--	5
1,1-Dichloroethane	ND		ug/l	5.0	--	5
Chloroform	ND		ug/l	5.0	--	5
Carbon tetrachloride	ND		ug/l	5.0	--	5
1,2-Dichloropropane	ND		ug/l	5.0	--	5
Dibromochloromethane	ND		ug/l	5.0	--	5
1,1,2-Trichloroethane	ND		ug/l	5.0	--	5
Tetrachloroethene	ND		ug/l	5.0	--	5
Chlorobenzene	ND		ug/l	5.0	--	5
Trichlorofluoromethane	ND		ug/l	10	--	5
1,2-Dichloroethane	ND		ug/l	5.0	--	5
1,1,1-Trichloroethane	ND		ug/l	5.0	--	5
Bromodichloromethane	ND		ug/l	5.0	--	5
trans-1,3-Dichloropropene	ND		ug/l	2.5	--	5
cis-1,3-Dichloropropene	ND		ug/l	2.5	--	5
1,1-Dichloropropene	ND		ug/l	10	--	5
Bromoform	ND		ug/l	10	--	5
1,1,2,2-Tetrachloroethane	ND		ug/l	5.0	--	5
Benzene	ND		ug/l	2.5	--	5
Toluene	ND		ug/l	5.0	--	5
Ethylbenzene	ND		ug/l	5.0	--	5
Chloromethane	ND		ug/l	10	--	5
Bromomethane	ND		ug/l	10	--	5
Vinyl chloride	ND		ug/l	5.0	--	5
Chloroethane	ND		ug/l	10	--	5
1,1-Dichloroethene	ND		ug/l	5.0	--	5
trans-1,2-Dichloroethene	18		ug/l	5.0	--	5
Trichloroethene	ND		ug/l	5.0	--	5
1,2-Dichlorobenzene	ND		ug/l	5.0	--	5
1,3-Dichlorobenzene	ND		ug/l	5.0	--	5
1,4-Dichlorobenzene	ND		ug/l	5.0	--	5

Project Name: NBHS IRA PSWS **Lab Number:** L1401583

Project Number: 115058 **Report Date:** 04/01/14

SAMPLE RESULTS

Lab ID: L1401583-03 D Date Collected: 01/16/14 12:50

Client ID: EFFLUENT Date Received: 01/16/14

Sample Location: NEW BEDFORD, MA Field Prep: Not Specified

Parameter	Result	Qualifier	Units	RL	MDL	Dilution Factor
MCP Volatile Organics - Westborough Lab						
Methyl tert butyl ether	ND		ug/l	10	--	5
p/m-Xylene	ND		ug/l	10	--	5
o-Xylene	ND		ug/l	5.0	--	5
cis-1,2-Dichloroethene	230		ug/l	5.0	--	5
Dibromomethane	ND		ug/l	10	--	5
1,2,3-Trichloropropane	ND		ug/l	10	--	5
Styrene	ND		ug/l	5.0	--	5
Dichlorodifluoromethane	ND		ug/l	10	--	5
Acetone	ND		ug/l	25	--	5
Carbon disulfide	ND		ug/l	10	--	5
2-Butanone	ND		ug/l	25	--	5
4-Methyl-2-pentanone	ND		ug/l	25	--	5
2-Hexanone	ND		ug/l	25	--	5
Bromochloromethane	ND		ug/l	10	--	5
Tetrahydrofuran	48		ug/l	10	--	5
2,2-Dichloropropane	ND		ug/l	10	--	5
1,2-Dibromoethane	ND		ug/l	10	--	5
1,3-Dichloropropane	ND		ug/l	10	--	5
1,1,1,2-Tetrachloroethane	ND		ug/l	5.0	--	5
Bromobenzene	ND		ug/l	10	--	5
n-Butylbenzene	ND		ug/l	10	--	5
sec-Butylbenzene	ND		ug/l	10	--	5
tert-Butylbenzene	ND		ug/l	10	--	5
o-Chlorotoluene	ND		ug/l	10	--	5
p-Chlorotoluene	ND		ug/l	10	--	5
1,2-Dibromo-3-chloropropane	ND		ug/l	10	--	5
Hexachlorobutadiene	ND		ug/l	3.0	--	5
Isopropylbenzene	ND		ug/l	10	--	5
p-Isopropyltoluene	ND		ug/l	10	--	5
Naphthalene	ND		ug/l	10	--	5
n-Propylbenzene	ND		ug/l	10	--	5
1,2,3-Trichlorobenzene	ND		ug/l	10	--	5
1,2,4-Trichlorobenzene	ND		ug/l	10	--	5
1,3,5-Trimethylbenzene	ND		ug/l	10	--	5
1,2,4-Trimethylbenzene	ND		ug/l	10	--	5
Ethyl ether	ND		ug/l	10	--	5
Isopropyl Ether	ND		ug/l	10	--	5
Ethyl-Tert-Butyl-Ether	ND		ug/l	10	--	5
Tertiary-Amyl Methyl Ether	ND		ug/l	10	--	5

Project Name: NBHS IRA PSWS **Lab Number:** L1401583

Project Number: 115058 **Report Date:** 04/01/14

SAMPLE RESULTS

Lab ID: L1401583-03 D Date Collected: 01/16/14 12:50

Client ID: EFFLUENT Date Received: 01/16/14

Sample Location: NEW BEDFORD, MA Field Prep: Not Specified

Parameter	Result	Qualifier	Units	RL	MDL	Dilution Factor
MCP Volatile Organics - Westborough Lab						
1,4-Dioxane	ND		ug/l	1200	--	5

Surrogate	% Recovery	Qualifier	Acceptance Criteria
1,2-Dichloroethane-d4	97		70-130
Toluene-d8	98		70-130
4-Bromofluorobenzene	94		70-130
Dibromofluoromethane	102		70-130

Project Name: NBHS IRA PSWS **Lab Number:** L1401583

Project Number: 115058 **Report Date:** 04/01/14

SAMPLE RESULTS

Lab ID:	L1401583-04	Date Collected:	01/16/14 00:00
Client ID:	TRIP BLANK	Date Received:	01/16/14
Sample Location:	NEW BEDFORD, MA	Field Prep:	Not Specified
Matrix:	Water		
Analytical Method:	97,8260C		
Analytical Date:	01/20/14 09:15		
Analyst:	MM		

Parameter	Result	Qualifier	Units	RL	MDL	Dilution Factor
MCP Volatile Organics - Westborough Lab						
Methylene chloride	ND		ug/l	2.0	--	1
1,1-Dichloroethane	ND		ug/l	1.0	--	1
Chloroform	ND		ug/l	1.0	--	1
Carbon tetrachloride	ND		ug/l	1.0	--	1
1,2-Dichloropropane	ND		ug/l	1.0	--	1
Dibromochloromethane	ND		ug/l	1.0	--	1
1,1,2-Trichloroethane	ND		ug/l	1.0	--	1
Tetrachloroethene	ND		ug/l	1.0	--	1
Chlorobenzene	ND		ug/l	1.0	--	1
Trichlorofluoromethane	ND		ug/l	2.0	--	1
1,2-Dichloroethane	ND		ug/l	1.0	--	1
1,1,1-Trichloroethane	ND		ug/l	1.0	--	1
Bromodichloromethane	ND		ug/l	1.0	--	1
trans-1,3-Dichloropropene	ND		ug/l	0.50	--	1
cis-1,3-Dichloropropene	ND		ug/l	0.50	--	1
1,1-Dichloropropene	ND		ug/l	2.0	--	1
Bromoform	ND		ug/l	2.0	--	1
1,1,2,2-Tetrachloroethane	ND		ug/l	1.0	--	1
Benzene	ND		ug/l	0.50	--	1
Toluene	ND		ug/l	1.0	--	1
Ethylbenzene	ND		ug/l	1.0	--	1
Chloromethane	ND		ug/l	2.0	--	1
Bromomethane	ND		ug/l	2.0	--	1
Vinyl chloride	ND		ug/l	1.0	--	1
Chloroethane	ND		ug/l	2.0	--	1
1,1-Dichloroethene	ND		ug/l	1.0	--	1
trans-1,2-Dichloroethene	ND		ug/l	1.0	--	1
Trichloroethene	ND		ug/l	1.0	--	1
1,2-Dichlorobenzene	ND		ug/l	1.0	--	1
1,3-Dichlorobenzene	ND		ug/l	1.0	--	1
1,4-Dichlorobenzene	ND		ug/l	1.0	--	1

Project Name: NBHS IRA PSWS **Lab Number:** L1401583

Project Number: 115058 **Report Date:** 04/01/14

SAMPLE RESULTS

Lab ID: L1401583-04 Date Collected: 01/16/14 00:00

Client ID: TRIP BLANK Date Received: 01/16/14

Sample Location: NEW BEDFORD, MA Field Prep: Not Specified

Parameter	Result	Qualifier	Units	RL	MDL	Dilution Factor
MCP Volatile Organics - Westborough Lab						
Methyl tert butyl ether	ND		ug/l	2.0	--	1
p/m-Xylene	ND		ug/l	2.0	--	1
o-Xylene	ND		ug/l	1.0	--	1
cis-1,2-Dichloroethene	ND		ug/l	1.0	--	1
Dibromomethane	ND		ug/l	2.0	--	1
1,2,3-Trichloropropane	ND		ug/l	2.0	--	1
Styrene	ND		ug/l	1.0	--	1
Dichlorodifluoromethane	ND		ug/l	2.0	--	1
Acetone	ND		ug/l	5.0	--	1
Carbon disulfide	ND		ug/l	2.0	--	1
2-Butanone	ND		ug/l	5.0	--	1
4-Methyl-2-pentanone	ND		ug/l	5.0	--	1
2-Hexanone	ND		ug/l	5.0	--	1
Bromochloromethane	ND		ug/l	2.0	--	1
Tetrahydrofuran	ND		ug/l	2.0	--	1
2,2-Dichloropropane	ND		ug/l	2.0	--	1
1,2-Dibromoethane	ND		ug/l	2.0	--	1
1,3-Dichloropropane	ND		ug/l	2.0	--	1
1,1,1,2-Tetrachloroethane	ND		ug/l	1.0	--	1
Bromobenzene	ND		ug/l	2.0	--	1
n-Butylbenzene	ND		ug/l	2.0	--	1
sec-Butylbenzene	ND		ug/l	2.0	--	1
tert-Butylbenzene	ND		ug/l	2.0	--	1
o-Chlorotoluene	ND		ug/l	2.0	--	1
p-Chlorotoluene	ND		ug/l	2.0	--	1
1,2-Dibromo-3-chloropropane	ND		ug/l	2.0	--	1
Hexachlorobutadiene	ND		ug/l	0.60	--	1
Isopropylbenzene	ND		ug/l	2.0	--	1
p-Isopropyltoluene	ND		ug/l	2.0	--	1
Naphthalene	ND		ug/l	2.0	--	1
n-Propylbenzene	ND		ug/l	2.0	--	1
1,2,3-Trichlorobenzene	ND		ug/l	2.0	--	1
1,2,4-Trichlorobenzene	ND		ug/l	2.0	--	1
1,3,5-Trimethylbenzene	ND		ug/l	2.0	--	1
1,2,4-Trimethylbenzene	ND		ug/l	2.0	--	1
Ethyl ether	ND		ug/l	2.0	--	1
Isopropyl Ether	ND		ug/l	2.0	--	1
Ethyl-Tert-Butyl-Ether	ND		ug/l	2.0	--	1
Tertiary-Amyl Methyl Ether	ND		ug/l	2.0	--	1

ANALYTICAL REPORT

Lab Number:	L1401583
Client:	TRC Environmental Consultants Wannalancit Mills 650 Suffolk Street Lowell, MA 01854
ATTN:	David Sullivan
Phone:	(978) 656-3565
Project Name:	NBHS IRA PSWS
Project Number:	115058
Report Date:	04/01/14

The original project report/data package is held by Alpha Analytical. This report/data package is paginated and should be reproduced only in its entirety. Alpha Analytical holds no responsibility for results and/or data that are not consistent with the original.

Certifications & Approvals: MA (M-MA086), NY (11148), CT (PH-0574), NH (2003), NJ NELAP (MA935), RI (LAO00065), ME (MA00086), PA (68-03671), USDA (Permit #P-330-11-00240), NC (666), TX (T104704476), DOD (L2217), US Army Corps of Engineers.

Eight Walkup Drive, Westborough, MA 01581-1019
508-898-9220 (Fax) 508-898-9193 800-624-9220 - www.alphalab.com

Project Name: NBHS IRA PSWS
Project Number: 115058

Lab Number: L1401583
Report Date: 04/01/14

Alpha Sample ID	Client ID	Sample Location	Collection Date/Time
L1401583-01	INFLUENT	NEW BEDFORD, MA	01/16/14 12:30
L1401583-02	INFLUENT (FILTERED)	NEW BEDFORD, MA	01/16/14 12:30
L1401583-03	EFFLUENT	NEW BEDFORD, MA	01/16/14 12:50
L1401583-04	TRIP BLANK	NEW BEDFORD, MA	01/16/14 00:00

Project Name: NBHS IRA PSWS **Lab Number:** L1401583

Project Number: 115058 **Report Date:** 04/01/14

MADEP MCP Response Action Analytical Report Certification

This form provides certifications for all samples performed by MCP methods. Please refer to the Sample Results and Container Information sections of this report for specification of MCP methods used for each analysis. The following questions pertain only to MCP Analytical Methods.

An affirmative response to questions A through F is required for "Presumptive Certainty" status		
A	Were all samples received in a condition consistent with those described on the Chain-of-Custody, properly preserved (including temperature) in the field or laboratory, and prepared/analyzed within method holding times?	YES
B	Were the analytical method(s) and all associated QC requirements specified in the selected CAM protocol(s) followed?	YES
C	Were all required corrective actions and analytical response actions specified in the selected CAM protocol(s) implemented for all identified performance standard non-conformances?	YES
D	Does the laboratory report comply with all the reporting requirements specified in CAM VII A, "Quality Assurance and Quality Control Guidelines for the Acquisition and Reporting of Analytical Data?"	YES
E a.	VPH, EPH, and APH Methods only: Was each method conducted without significant modification(s)? (Refer to the individual method(s) for a list of significant modifications).	N/A
E b.	APH and TO-15 Methods only: Was the complete analyte list reported for each method?	N/A
F	Were all applicable CAM protocol QC and performance standard non-conformances identified and evaluated in a laboratory narrative (including all "No" responses to Questions A through E)?	YES

A response to questions G, H and I is required for "Presumptive Certainty" status		
G	Were the reporting limits at or below all CAM reporting limits specified in the selected CAM protocol(s)?	NO
H	Were all QC performance standards specified in the CAM protocol(s) achieved?	NO
I	Were results reported for the complete analyte list specified in the selected CAM protocol(s)?	YES

For any questions answered "No", please refer to the case narrative section on the following page(s).

Please note that sample matrix information is located in the Sample Results section of this report.

Project Name: NBHS IRA PSWS **Lab Number:** L1401583
Project Number: 115058 **Report Date:** 04/01/14

Case Narrative

The samples were received in accordance with the Chain of Custody and no significant deviations were encountered during the preparation or analysis unless otherwise noted. Sample Receipt, Container Information, and the Chain of Custody are located at the back of the report.

Results contained within this report relate only to the samples submitted under this Alpha Lab Number and meet all of the requirements of NELAC, for all NELAC accredited parameters. The data presented in this report is organized by parameter (i.e. VOC, SVOC, etc.). Sample specific Quality Control data (i.e. Surrogate Spike Recovery) is reported at the end of the target analyte list for each individual sample, followed by the Laboratory Batch Quality Control at the end of each parameter. If a sample was re-analyzed or re-extracted due to a required quality control corrective action and if both sets of data are reported, the Laboratory ID of the re-analysis or re-extraction is designated with an "R" or "RE", respectively. When multiple Batch Quality Control elements are reported (e.g. more than one LCS), the associated samples for each element are noted in the grey shaded header line of each data table. Any Laboratory Batch, Sample Specific % recovery or RPD value that is outside the listed Acceptance Criteria is bolded in the report. Performance criteria for CAM and RCP methods allow for some LCS compound failures to occur and still be within method compliance. In these instances, the specific failures are not narrated but are noted in the associated QC table. This information is also incorporated in the Data Usability format for our Data Merger tool where it can be reviewed along with any associated usability implications. Soil/sediments, solids and tissues are reported on a dry weight basis unless otherwise noted. Definitions of all data qualifiers and acronyms used in this report are provided in the Glossary located at the back of the report.

In reference to questions H (CAM) or 4 (RCP) when "NO" is checked, the performance criteria for CAM and RCP methods allow for some quality control failures to occur and still be within method compliance. In these instances the specific failure is not narrated but noted in the associated QC table. The information is also incorporated in the Data Usability format of our Data Merger tool where it can be reviewed along with any associated usability implications.

Please see the associated ADEx data file for a comparison of laboratory reporting limits that were achieved with the regulatory Numerical Standards requested on the Chain of Custody.

HOLD POLICY
For samples submitted on hold, Alpha's policy is to hold samples (with the exception of Air canisters) free of charge for 21 calendar days from the date the project is completed. After 21 calendar days, we will dispose of all samples submitted including those put on hold unless you have contacted your Client Service Representative and made arrangements for Alpha to continue to hold the samples. Air canisters will be disposed after 3 business days from the date the project is completed.

Please contact Client Services at 800-624-9220 with any questions.

Project Name: NBHS IRA PSWS **Lab Number:** L1401583
Project Number: 115058 **Report Date:** 04/01/14

Case Narrative (continued)

Report Submission

This report replaces the report issued on January 23, 2014. Due to a laboratory oversight, L1401726-02 was improperly filtered for PCBs. PCB results for this sample have been removed.

MCP Related Narratives

Volatile Organics

L1401583-01: The Effluent results are greater than the Influent results. The sample containers were verified as being labeled correctly by the laboratory, and the reported results were confirmed by the screen analysis results.

L1401583-03 has elevated detection limits due to the dilution required by the elevated concentrations of target compounds in the sample.

In reference to question G:

L1401583-03: All of the target analytes, with the exception of trans-1,2-Dichloroethene, cis-1,2-Dichloroethene, Tetrahydrofuran, did not achieve the requested CAM reporting limits.

In reference to question H:

The initial calibration, associated with L1401583-01, -03, and -04, did not meet the method required minimum response factor on the lowest calibration standard for 2-butanone (0.08842), 4-methyl-2-pentanone (0.06510), and 1,4-dioxane (0.00253), as well as the average response factor for acetone, 2-butanone, 4-methyl-2-pentanone, and 1,4-dioxane. In addition, a quadratic fit was utilized for carbon tetrachloride, cis-1,3-dichloropropene, bromoform, 2,2-dichloropropane, 1,1,1,2-tetrachloroethane, 1,2-dibromo-3-chloropropane, tertiary-amyl-methyl-ether, and vinyl acetate.

The continuing calibration standard, associated with L1401583-01, -03, and -04, is outside the acceptance criteria for several compounds; however, it is within overall method allowances. A copy of the continuing calibration standard is included as an addendum to this report.

PCBs

L1401583-01 has elevated detection limits due to the dilution required by the elevated concentrations of target compounds in the samples.

Project Name:	NBHS IRA PSWS	**Lab Number:**	L1401583
Project Number:	115058	**Report Date:**	04/01/14

Case Narrative (continued)

In reference to question G:

L1401583-01: All of the target analytes, with the exception of Aroclor 1254, did not achieve the requested CAM reporting limits.

I, the undersigned, attest under the pains and penalties of perjury that, to the best of my knowledge and belief and based upon my personal inquiry of those responsible for providing the information contained in this analytical report, such information is accurate and complete. This certificate of analysis is not complete unless this page accompanies any and all pages of this report.

Authorized Signature: Cynthia McQueen

Title: Technical Director/Representative

Date: 04/01/14

ORGANICS

VOLATILES

Project Name: NBHS IRA PSWS **Lab Number:** L1401583

Project Number: 115058 **Report Date:** 04/01/14

SAMPLE RESULTS

Lab ID:	L1401583-01	Date Collected:	01/16/14 12:30
Client ID:	INFLUENT	Date Received:	01/16/14
Sample Location:	NEW BEDFORD, MA	Field Prep:	Not Specified
Matrix:	Water		
Analytical Method:	97,8260C		
Analytical Date:	01/20/14 09:47		
Analyst:	MM		

Parameter	Result	Qualifier	Units	RL	MDL	Dilution Factor
MCP Volatile Organics - Westborough Lab						
Methylene chloride	ND		ug/l	2.0	--	1
1,1-Dichloroethane	ND		ug/l	1.0	--	1
Chloroform	ND		ug/l	1.0	--	1
Carbon tetrachloride	ND		ug/l	1.0	--	1
1,2-Dichloropropane	ND		ug/l	1.0	--	1
Dibromochloromethane	ND		ug/l	1.0	--	1
1,1,2-Trichloroethane	ND		ug/l	1.0	--	1
Tetrachloroethene	ND		ug/l	1.0	--	1
Chlorobenzene	ND		ug/l	1.0	--	1
Trichlorofluoromethane	ND		ug/l	2.0	--	1
1,2-Dichloroethane	ND		ug/l	1.0	--	1
1,1,1-Trichloroethane	ND		ug/l	1.0	--	1
Bromodichloromethane	ND		ug/l	1.0	--	1
trans-1,3-Dichloropropene	ND		ug/l	0.50	--	1
cis-1,3-Dichloropropene	ND		ug/l	0.50	--	1
1,1-Dichloropropene	ND		ug/l	2.0	--	1
Bromoform	ND		ug/l	2.0	--	1
1,1,2,2-Tetrachloroethane	ND		ug/l	1.0	--	1
Benzene	ND		ug/l	0.50	--	1
Toluene	1.4		ug/l	1.0	--	1
Ethylbenzene	ND		ug/l	1.0	--	1
Chloromethane	ND		ug/l	2.0	--	1
Bromomethane	ND		ug/l	2.0	--	1
Vinyl chloride	26		ug/l	1.0	--	1
Chloroethane	ND		ug/l	2.0	--	1
1,1-Dichloroethene	ND		ug/l	1.0	--	1
trans-1,2-Dichloroethene	12		ug/l	1.0	--	1
Trichloroethene	1.9		ug/l	1.0	--	1
1,2-Dichlorobenzene	ND		ug/l	1.0	--	1
1,3-Dichlorobenzene	1.7		ug/l	1.0	--	1
1,4-Dichlorobenzene	6.5		ug/l	1.0	--	1

Project Name: NBHS IRA PSWS **Lab Number:** L1401583

Project Number: 115058 **Report Date:** 04/01/14

SAMPLE RESULTS

Lab ID: L1401583-01 Date Collected: 01/16/14 12:30

Client ID: INFLUENT Date Received: 01/16/14

Sample Location: NEW BEDFORD, MA Field Prep: Not Specified

Parameter	Result	Qualifier	Units	RL	MDL	Dilution Factor
MCP Volatile Organics - Westborough Lab						
Methyl tert butyl ether	ND		ug/l	2.0	--	1
p/m-Xylene	ND		ug/l	2.0	--	1
o-Xylene	ND		ug/l	1.0	--	1
cis-1,2-Dichloroethene	28		ug/l	1.0	--	1
Dibromomethane	ND		ug/l	2.0	--	1
1,2,3-Trichloropropane	ND		ug/l	2.0	--	1
Styrene	ND		ug/l	1.0	--	1
Dichlorodifluoromethane	ND		ug/l	2.0	--	1
Acetone	ND		ug/l	5.0	--	1
Carbon disulfide	ND		ug/l	2.0	--	1
2-Butanone	ND		ug/l	5.0	--	1
4-Methyl-2-pentanone	ND		ug/l	5.0	--	1
2-Hexanone	ND		ug/l	5.0	--	1
Bromochloromethane	ND		ug/l	2.0	--	1
Tetrahydrofuran	ND		ug/l	2.0	--	1
2,2-Dichloropropane	ND		ug/l	2.0	--	1
1,2-Dibromoethane	ND		ug/l	2.0	--	1
1,3-Dichloropropane	ND		ug/l	2.0	--	1
1,1,1,2-Tetrachloroethane	ND		ug/l	1.0	--	1
Bromobenzene	ND		ug/l	2.0	--	1
n-Butylbenzene	ND		ug/l	2.0	--	1
sec-Butylbenzene	ND		ug/l	2.0	--	1
tert-Butylbenzene	ND		ug/l	2.0	--	1
o-Chlorotoluene	ND		ug/l	2.0	--	1
p-Chlorotoluene	ND		ug/l	2.0	--	1
1,2-Dibromo-3-chloropropane	ND		ug/l	2.0	--	1
Hexachlorobutadiene	ND		ug/l	0.60	--	1
Isopropylbenzene	ND		ug/l	2.0	--	1
p-Isopropyltoluene	ND		ug/l	2.0	--	1
Naphthalene	ND		ug/l	2.0	--	1
n-Propylbenzene	ND		ug/l	2.0	--	1
1,2,3-Trichlorobenzene	ND		ug/l	2.0	--	1
1,2,4-Trichlorobenzene	4.5		ug/l	2.0	--	1
1,3,5-Trimethylbenzene	ND		ug/l	2.0	--	1
1,2,4-Trimethylbenzene	ND		ug/l	2.0	--	1
Ethyl ether	ND		ug/l	2.0	--	1
Isopropyl Ether	ND		ug/l	2.0	--	1
Ethyl-Tert-Butyl-Ether	ND		ug/l	2.0	--	1
Tertiary-Amyl Methyl Ether	ND		ug/l	2.0	--	1

Project Name: NBHS IRA PSWS **Lab Number:** L1401583

Project Number: 115058 **Report Date:** 04/01/14

SAMPLE RESULTS

Lab ID:	L1401583-01	Date Collected:	01/16/14 12:30
Client ID:	INFLUENT	Date Received:	01/16/14
Sample Location:	NEW BEDFORD, MA	Field Prep:	Not Specified

Parameter	Result	Qualifier	Units	RL	MDL	Dilution Factor
MCP Volatile Organics - Westborough Lab						
1,4-Dioxane	ND		ug/l	250	--	1

Surrogate	% Recovery	Qualifier	Acceptance Criteria
1,2-Dichloroethane-d4	96		70-130
Toluene-d8	97		70-130
4-Bromofluorobenzene	91		70-130
Dibromofluoromethane	101		70-130

Project Name: NBHS IRA PSWS **Lab Number:** L1401583

Project Number: 115058 **Report Date:** 04/01/14

SAMPLE RESULTS

Lab ID:	L1401583-03 D	Date Collected:	01/16/14 12:50
Client ID:	EFFLUENT	Date Received:	01/16/14
Sample Location:	NEW BEDFORD, MA	Field Prep:	Not Specified
Matrix:	Water		
Analytical Method:	97,8260C		
Analytical Date:	01/20/14 10:19		
Analyst:	MM		

Parameter	Result	Qualifier	Units	RL	MDL	Dilution Factor
MCP Volatile Organics - Westborough Lab						
Methylene chloride	ND		ug/l	10	--	5
1,1-Dichloroethane	ND		ug/l	5.0	--	5
Chloroform	ND		ug/l	5.0	--	5
Carbon tetrachloride	ND		ug/l	5.0	--	5
1,2-Dichloropropane	ND		ug/l	5.0	--	5
Dibromochloromethane	ND		ug/l	5.0	--	5
1,1,2-Trichloroethane	ND		ug/l	5.0	--	5
Tetrachloroethene	ND		ug/l	5.0	--	5
Chlorobenzene	ND		ug/l	5.0	--	5
Trichlorofluoromethane	ND		ug/l	10	--	5
1,2-Dichloroethane	ND		ug/l	5.0	--	5
1,1,1-Trichloroethane	ND		ug/l	5.0	--	5
Bromodichloromethane	ND		ug/l	5.0	--	5
trans-1,3-Dichloropropene	ND		ug/l	2.5	--	5
cis-1,3-Dichloropropene	ND		ug/l	2.5	--	5
1,1-Dichloropropene	ND		ug/l	10	--	5
Bromoform	ND		ug/l	10	--	5
1,1,2,2-Tetrachloroethane	ND		ug/l	5.0	--	5
Benzene	ND		ug/l	2.5	--	5
Toluene	ND		ug/l	5.0	--	5
Ethylbenzene	ND		ug/l	5.0	--	5
Chloromethane	ND		ug/l	10	--	5
Bromomethane	ND		ug/l	10	--	5
Vinyl chloride	ND		ug/l	5.0	--	5
Chloroethane	ND		ug/l	10	--	5
1,1-Dichloroethene	ND		ug/l	5.0	--	5
trans-1,2-Dichloroethene	18		ug/l	5.0	--	5
Trichloroethene	ND		ug/l	5.0	--	5
1,2-Dichlorobenzene	ND		ug/l	5.0	--	5
1,3-Dichlorobenzene	ND		ug/l	5.0	--	5
1,4-Dichlorobenzene	ND		ug/l	5.0	--	5

Project Name: NBHS IRA PSWS **Lab Number:** L1401583

Project Number: 115058 **Report Date:** 04/01/14

SAMPLE RESULTS

Lab ID: L1401583-03 D Date Collected: 01/16/14 12:50

Client ID: EFFLUENT Date Received: 01/16/14

Sample Location: NEW BEDFORD, MA Field Prep: Not Specified

Parameter	Result	Qualifier	Units	RL	MDL	Dilution Factor
MCP Volatile Organics - Westborough Lab						
Methyl tert butyl ether	ND		ug/l	10	--	5
p/m-Xylene	ND		ug/l	10	--	5
o-Xylene	ND		ug/l	5.0	--	5
cis-1,2-Dichloroethene	230		ug/l	5.0	--	5
Dibromomethane	ND		ug/l	10	--	5
1,2,3-Trichloropropane	ND		ug/l	10	--	5
Styrene	ND		ug/l	5.0	--	5
Dichlorodifluoromethane	ND		ug/l	10	--	5
Acetone	ND		ug/l	25	--	5
Carbon disulfide	ND		ug/l	10	--	5
2-Butanone	ND		ug/l	25	--	5
4-Methyl-2-pentanone	ND		ug/l	25	--	5
2-Hexanone	ND		ug/l	25	--	5
Bromochloromethane	ND		ug/l	10	--	5
Tetrahydrofuran	48		ug/l	10	--	5
2,2-Dichloropropane	ND		ug/l	10	--	5
1,2-Dibromoethane	ND		ug/l	10	--	5
1,3-Dichloropropane	ND		ug/l	10	--	5
1,1,1,2-Tetrachloroethane	ND		ug/l	5.0	--	5
Bromobenzene	ND		ug/l	10	--	5
n-Butylbenzene	ND		ug/l	10	--	5
sec-Butylbenzene	ND		ug/l	10	--	5
tert-Butylbenzene	ND		ug/l	10	--	5
o-Chlorotoluene	ND		ug/l	10	--	5
p-Chlorotoluene	ND		ug/l	10	--	5
1,2-Dibromo-3-chloropropane	ND		ug/l	10	--	5
Hexachlorobutadiene	ND		ug/l	3.0	--	5
Isopropylbenzene	ND		ug/l	10	--	5
p-Isopropyltoluene	ND		ug/l	10	--	5
Naphthalene	ND		ug/l	10	--	5
n-Propylbenzene	ND		ug/l	10	--	5
1,2,3-Trichlorobenzene	ND		ug/l	10	--	5
1,2,4-Trichlorobenzene	ND		ug/l	10	--	5
1,3,5-Trimethylbenzene	ND		ug/l	10	--	5
1,2,4-Trimethylbenzene	ND		ug/l	10	--	5
Ethyl ether	ND		ug/l	10	--	5
Isopropyl Ether	ND		ug/l	10	--	5
Ethyl-Tert-Butyl-Ether	ND		ug/l	10	--	5
Tertiary-Amyl Methyl Ether	ND		ug/l	10	--	5

Project Name: NBHS IRA PSWS **Lab Number:** L1401583

Project Number: 115058 **Report Date:** 04/01/14

SAMPLE RESULTS

Lab ID: L1401583-03 D Date Collected: 01/16/14 12:50

Client ID: EFFLUENT Date Received: 01/16/14

Sample Location: NEW BEDFORD, MA Field Prep: Not Specified

Parameter	Result	Qualifier	Units	RL	MDL	Dilution Factor
MCP Volatile Organics - Westborough Lab						
1,4-Dioxane	ND		ug/l	1200	--	5

Surrogate	% Recovery	Qualifier	Acceptance Criteria
1,2-Dichloroethane-d4	97		70-130
Toluene-d8	98		70-130
4-Bromofluorobenzene	94		70-130
Dibromofluoromethane	102		70-130

Project Name: NBHS IRA PSWS **Lab Number:** L1401583

Project Number: 115058 **Report Date:** 04/01/14

SAMPLE RESULTS

Lab ID:	L1401583-04	Date Collected:	01/16/14 00:00
Client ID:	TRIP BLANK	Date Received:	01/16/14
Sample Location:	NEW BEDFORD, MA	Field Prep:	Not Specified
Matrix:	Water		
Analytical Method:	97,8260C		
Analytical Date:	01/20/14 09:15		
Analyst:	MM		

Parameter	Result	Qualifier	Units	RL	MDL	Dilution Factor
MCP Volatile Organics - Westborough Lab						
Methylene chloride	ND		ug/l	2.0	--	1
1,1-Dichloroethane	ND		ug/l	1.0	--	1
Chloroform	ND		ug/l	1.0	--	1
Carbon tetrachloride	ND		ug/l	1.0	--	1
1,2-Dichloropropane	ND		ug/l	1.0	--	1
Dibromochloromethane	ND		ug/l	1.0	--	1
1,1,2-Trichloroethane	ND		ug/l	1.0	--	1
Tetrachloroethene	ND		ug/l	1.0	--	1
Chlorobenzene	ND		ug/l	1.0	--	1
Trichlorofluoromethane	ND		ug/l	2.0	--	1
1,2-Dichloroethane	ND		ug/l	1.0	--	1
1,1,1-Trichloroethane	ND		ug/l	1.0	--	1
Bromodichloromethane	ND		ug/l	1.0	--	1
trans-1,3-Dichloropropene	ND		ug/l	0.50	--	1
cis-1,3-Dichloropropene	ND		ug/l	0.50	--	1
1,1-Dichloropropene	ND		ug/l	2.0	--	1
Bromoform	ND		ug/l	2.0	--	1
1,1,2,2-Tetrachloroethane	ND		ug/l	1.0	--	1
Benzene	ND		ug/l	0.50	--	1
Toluene	ND		ug/l	1.0	--	1
Ethylbenzene	ND		ug/l	1.0	--	1
Chloromethane	ND		ug/l	2.0	--	1
Bromomethane	ND		ug/l	2.0	--	1
Vinyl chloride	ND		ug/l	1.0	--	1
Chloroethane	ND		ug/l	2.0	--	1
1,1-Dichloroethene	ND		ug/l	1.0	--	1
trans-1,2-Dichloroethene	ND		ug/l	1.0	--	1
Trichloroethene	ND		ug/l	1.0	--	1
1,2-Dichlorobenzene	ND		ug/l	1.0	--	1
1,3-Dichlorobenzene	ND		ug/l	1.0	--	1
1,4-Dichlorobenzene	ND		ug/l	1.0	--	1

Project Name: NBHS IRA PSWS **Lab Number:** L1401583

Project Number: 115058 **Report Date:** 04/01/14

SAMPLE RESULTS

Lab ID: L1401583-04 Date Collected: 01/16/14 00:00

Client ID: TRIP BLANK Date Received: 01/16/14

Sample Location: NEW BEDFORD, MA Field Prep: Not Specified

Parameter	Result	Qualifier	Units	RL	MDL	Dilution Factor
MCP Volatile Organics - Westborough Lab						
Methyl tert butyl ether	ND		ug/l	2.0	--	1
p/m-Xylene	ND		ug/l	2.0	--	1
o-Xylene	ND		ug/l	1.0	--	1
cis-1,2-Dichloroethene	ND		ug/l	1.0	--	1
Dibromomethane	ND		ug/l	2.0	--	1
1,2,3-Trichloropropane	ND		ug/l	2.0	--	1
Styrene	ND		ug/l	1.0	--	1
Dichlorodifluoromethane	ND		ug/l	2.0	--	1
Acetone	ND		ug/l	5.0	--	1
Carbon disulfide	ND		ug/l	2.0	--	1
2-Butanone	ND		ug/l	5.0	--	1
4-Methyl-2-pentanone	ND		ug/l	5.0	--	1
2-Hexanone	ND		ug/l	5.0	--	1
Bromochloromethane	ND		ug/l	2.0	--	1
Tetrahydrofuran	ND		ug/l	2.0	--	1
2,2-Dichloropropane	ND		ug/l	2.0	--	1
1,2-Dibromoethane	ND		ug/l	2.0	--	1
1,3-Dichloropropane	ND		ug/l	2.0	--	1
1,1,1,2-Tetrachloroethane	ND		ug/l	1.0	--	1
Bromobenzene	ND		ug/l	2.0	--	1
n-Butylbenzene	ND		ug/l	2.0	--	1
sec-Butylbenzene	ND		ug/l	2.0	--	1
tert-Butylbenzene	ND		ug/l	2.0	--	1
o-Chlorotoluene	ND		ug/l	2.0	--	1
p-Chlorotoluene	ND		ug/l	2.0	--	1
1,2-Dibromo-3-chloropropane	ND		ug/l	2.0	--	1
Hexachlorobutadiene	ND		ug/l	0.60	--	1
Isopropylbenzene	ND		ug/l	2.0	--	1
p-Isopropyltoluene	ND		ug/l	2.0	--	1
Naphthalene	ND		ug/l	2.0	--	1
n-Propylbenzene	ND		ug/l	2.0	--	1
1,2,3-Trichlorobenzene	ND		ug/l	2.0	--	1
1,2,4-Trichlorobenzene	ND		ug/l	2.0	--	1
1,3,5-Trimethylbenzene	ND		ug/l	2.0	--	1
1,2,4-Trimethylbenzene	ND		ug/l	2.0	--	1
Ethyl ether	ND		ug/l	2.0	--	1
Isopropyl Ether	ND		ug/l	2.0	--	1
Ethyl-Tert-Butyl-Ether	ND		ug/l	2.0	--	1
Tertiary-Amyl Methyl Ether	ND		ug/l	2.0	--	1

Project Name: NBHS IRA PSWS **Lab Number:** L1401583

Project Number: 115058 **Report Date:** 04/01/14

SAMPLE RESULTS

Lab ID:	L1401583-04	Date Collected:	01/16/14 00:00
Client ID:	TRIP BLANK	Date Received:	01/16/14
Sample Location:	NEW BEDFORD, MA	Field Prep:	Not Specified

Parameter	Result	Qualifier	Units	RL	MDL	Dilution Factor
MCP Volatile Organics - Westborough Lab						
1,4-Dioxane	ND		ug/l	250	--	1

Surrogate	% Recovery	Qualifier	Acceptance Criteria
1,2-Dichloroethane-d4	95		70-130
Toluene-d8	98		70-130
4-Bromofluorobenzene	95		70-130
Dibromofluoromethane	100		70-130

Project Name: NBHS IRA PSWS **Lab Number:** L1401583

Project Number: 115058 **Report Date:** 04/01/14

Method Blank Analysis
Batch Quality Control

Analytical Method: 97,8260C
Analytical Date: 01/20/14 06:38
Analyst: MM

Parameter	Result	Qualifier	Units	RL	MDL
MCP Volatile Organics - Westborough Lab for sample(s): 01,03-04 Batch: WG665716-3					
Methylene chloride	ND		ug/l	2.0	--
1,1-Dichloroethane	ND		ug/l	1.0	--
Chloroform	ND		ug/l	1.0	--
Carbon tetrachloride	ND		ug/l	1.0	--
1,2-Dichloropropane	ND		ug/l	1.0	--
Dibromochloromethane	ND		ug/l	1.0	--
1,1,2-Trichloroethane	ND		ug/l	1.0	--
Tetrachloroethene	ND		ug/l	1.0	--
Chlorobenzene	ND		ug/l	1.0	--
Trichlorofluoromethane	ND		ug/l	2.0	--
1,2-Dichloroethane	ND		ug/l	1.0	--
1,1,1-Trichloroethane	ND		ug/l	1.0	--
Bromodichloromethane	ND		ug/l	1.0	--
trans-1,3-Dichloropropene	ND		ug/l	0.50	--
cis-1,3-Dichloropropene	ND		ug/l	0.50	--
1,1-Dichloropropene	ND		ug/l	2.0	--
Bromoform	ND		ug/l	2.0	--
1,1,2,2-Tetrachloroethane	ND		ug/l	1.0	--
Benzene	ND		ug/l	0.50	--
Toluene	ND		ug/l	1.0	--
Ethylbenzene	ND		ug/l	1.0	--
Chloromethane	ND		ug/l	2.0	--
Bromomethane	ND		ug/l	2.0	--
Vinyl chloride	ND		ug/l	1.0	--
Chloroethane	ND		ug/l	2.0	--
1,1-Dichloroethene	ND		ug/l	1.0	--
trans-1,2-Dichloroethene	ND		ug/l	1.0	--
Trichloroethene	ND		ug/l	1.0	--
1,2-Dichlorobenzene	ND		ug/l	1.0	--
1,3-Dichlorobenzene	ND		ug/l	1.0	--
1,4-Dichlorobenzene	ND		ug/l	1.0	--

Project Name: NBHS IRA PSWS **Lab Number:** L1401583

Project Number: 115058 **Report Date:** 04/01/14

Method Blank Analysis
Batch Quality Control

Analytical Method: 97,8260C
Analytical Date: 01/20/14 06:38
Analyst: MM

Parameter	Result	Qualifier	Units	RL	MDL
MCP Volatile Organics - Westborough Lab for sample(s): 01,03-04 Batch: WG665716-3					
Methyl tert butyl ether	ND		ug/l	2.0	--
p/m-Xylene	ND		ug/l	2.0	--
o-Xylene	ND		ug/l	1.0	--
cis-1,2-Dichloroethene	ND		ug/l	1.0	--
Dibromomethane	ND		ug/l	2.0	--
1,2,3-Trichloropropane	ND		ug/l	2.0	--
Styrene	ND		ug/l	1.0	--
Dichlorodifluoromethane	ND		ug/l	2.0	--
Acetone	ND		ug/l	5.0	--
Carbon disulfide	ND		ug/l	2.0	--
2-Butanone	ND		ug/l	5.0	--
4-Methyl-2-pentanone	ND		ug/l	5.0	--
2-Hexanone	ND		ug/l	5.0	--
Bromochloromethane	ND		ug/l	2.0	--
Tetrahydrofuran	ND		ug/l	2.0	--
2,2-Dichloropropane	ND		ug/l	2.0	--
1,2-Dibromoethane	ND		ug/l	2.0	--
1,3-Dichloropropane	ND		ug/l	2.0	--
1,1,1,2-Tetrachloroethane	ND		ug/l	1.0	--
Bromobenzene	ND		ug/l	2.0	--
n-Butylbenzene	ND		ug/l	2.0	--
sec-Butylbenzene	ND		ug/l	2.0	--
tert-Butylbenzene	ND		ug/l	2.0	--
o-Chlorotoluene	ND		ug/l	2.0	--
p-Chlorotoluene	ND		ug/l	2.0	--
1,2-Dibromo-3-chloropropane	ND		ug/l	2.0	--
Hexachlorobutadiene	ND		ug/l	0.60	--
Isopropylbenzene	ND		ug/l	2.0	--
p-Isopropyltoluene	ND		ug/l	2.0	--
Naphthalene	ND		ug/l	2.0	--
n-Propylbenzene	ND		ug/l	2.0	--

Project Name: NBHS IRA PSWS **Lab Number:** L1401583

Project Number: 115058 **Report Date:** 04/01/14

Method Blank Analysis
Batch Quality Control

Analytical Method: 97,8260C
Analytical Date: 01/20/14 06:38
Analyst: MM

Parameter	Result	Qualifier	Units	RL	MDL
MCP Volatile Organics - Westborough Lab for sample(s): 01,03-04 Batch: WG665716-3					
1,2,3-Trichlorobenzene	ND		ug/l	2.0	--
1,2,4-Trichlorobenzene	ND		ug/l	2.0	--
1,3,5-Trimethylbenzene	ND		ug/l	2.0	--
1,2,4-Trimethylbenzene	ND		ug/l	2.0	--
Ethyl ether	ND		ug/l	2.0	--
Isopropyl Ether	ND		ug/l	2.0	--
Ethyl-Tert-Butyl-Ether	ND		ug/l	2.0	--
Tertiary-Amyl Methyl Ether	ND		ug/l	2.0	--
1,4-Dioxane	ND		ug/l	250	--

Surrogate	%Recovery	Qualifier	Acceptance Criteria
1,2-Dichloroethane-d4	96		70-130
Toluene-d8	97		70-130
4-Bromofluorobenzene	95		70-130
Dibromofluoromethane	100		70-130

Lab Control Sample Analysis
Batch Quality Control

Project Name: NBHS IRA PSWS
Project Number: 115058
Lab Number: L1401583
Report Date: 04/01/14

Parameter	LCS %Recovery	Qual	LCSD %Recovery	Qual	%Recovery Limits	RPD	Qual	RPD Limits
MCP Volatile Organics - Westborough Lab Associated sample(s): 01,03-04 Batch: WG665716-1 WG665716-2								
Methylene chloride	100		100		70-130	0		20
1,1-Dichloroethane	99		98		70-130	1		20
Chloroform	103		102		70-130	1		20
Carbon tetrachloride	95		95		70-130	0		20
1,2-Dichloropropane	100		100		70-130	0		20
Dibromochloromethane	104		104		70-130	0		20
1,1,2-Trichloroethane	101		101		70-130	0		20
Tetrachloroethene	111		110		70-130	1		20
Chlorobenzene	105		104		70-130	1		20
Trichlorofluoromethane	104		102		70-130	2		20
1,2-Dichloroethane	97		97		70-130	0		20
1,1,1-Trichloroethane	111		111		70-130	0		20
Bromodichloromethane	100		101		70-130	1		20
trans-1,3-Dichloropropene	97		98		70-130	1		20
cis-1,3-Dichloropropene	99		100		70-130	1		20
1,1-Dichloropropene	102		102		70-130	0		20
Bromoform	102		104		70-130	2		20
1,1,2,2-Tetrachloroethane	93		96		70-130	3		20
Benzene	103		103		70-130	0		20
Toluene	101		101		70-130	0		20
Ethylbenzene	105		104		70-130	1		20

Lab Control Sample Analysis
Batch Quality Control

Project Name: NBHS IRA PSWS
Project Number: 115058

Lab Number: L1401583
Report Date: 04/01/14

Parameter	LCS %Recovery	Qual	LCSD %Recovery	Qual	%Recovery Limits	RPD	Qual	RPD Limits
MCP Volatile Organics - Westborough Lab Associated sample(s): 01,03-04 Batch: WG665716-1 WG665716-2								
Chloromethane	90		90		70-130	0		20
Bromomethane	87		87		70-130	0		20
Vinyl chloride	99		99		70-130	0		20
Chloroethane	96		96		70-130	0		20
1,1-Dichloroethene	107		106		70-130	1		20
trans-1,2-Dichloroethene	105		106		70-130	1		20
Trichloroethene	104		103		70-130	1		20
1,2-Dichlorobenzene	103		105		70-130	2		20
1,3-Dichlorobenzene	103		104		70-130	1		20
1,4-Dichlorobenzene	103		103		70-130	0		20
Methyl tert butyl ether	103		104		70-130	1		20
p/m-Xylene	101		101		70-130	0		20
o-Xylene	103		102		70-130	1		20
cis-1,2-Dichloroethene	102		102		70-130	0		20
Dibromomethane	102		102		70-130	0		20
1,2,3-Trichloropropane	94		94		70-130	0		20
Styrene	109		108		70-130	1		20
Dichlorodifluoromethane	117		114		70-130	3		20
Acetone	117		106		70-130	10		20
Carbon disulfide	95		95		70-130	0		20
2-Butanone	96		93		70-130	3		20

Lab Control Sample Analysis
Batch Quality Control

Project Name: NBHS IRA PSWS
Project Number: 115058

Lab Number: L1401583
Report Date: 04/01/14

Parameter	LCS %Recovery	Qual	LCSD %Recovery	Qual	%Recovery Limits	RPD	Qual	RPD Limits
MCP Volatile Organics - Westborough Lab Associated sample(s): 01,03-04 Batch: WG665716-1 WG665716-2								
4-Methyl-2-pentanone	89		90		70-130	1		20
2-Hexanone	86		86		70-130	0		20
Bromochloromethane	109		110		70-130	1		20
Tetrahydrofuran	87		87		70-130	0		20
2,2-Dichloropropane	110		112		70-130	2		20
1,2-Dibromoethane	101		102		70-130	1		20
1,3-Dichloropropane	98		99		70-130	1		20
1,1,1,2-Tetrachloroethane	104		105		70-130	1		20
Bromobenzene	104		104		70-130	0		20
n-Butylbenzene	100		99		70-130	1		20
sec-Butylbenzene	105		104		70-130	1		20
tert-Butylbenzene	102		102		70-130	0		20
o-Chlorotoluene	96		96		70-130	0		20
p-Chlorotoluene	98		99		70-130	1		20
1,2-Dibromo-3-chloropropane	91		94		70-130	3		20
Hexachlorobutadiene	108		106		70-130	2		20
Isopropylbenzene	108		108		70-130	0		20
p-Isopropyltoluene	106		105		70-130	1		20
Naphthalene	93		95		70-130	2		20
n-Propylbenzene	103		103		70-130	0		20
1,2,3-Trichlorobenzene	99		101		70-130	2		20

Lab Control Sample Analysis
Batch Quality Control

Project Name: NBHS IRA PSWS
Project Number: 115058

Lab Number: L1401583
Report Date: 04/01/14

Parameter	LCS %Recovery	Qual	LCSD %Recovery	Qual	%Recovery Limits	RPD	Qual	RPD Limits
MCP Volatile Organics - Westborough Lab Associated sample(s): 01,03-04 Batch: WG665716-1 WG665716-2								
1,2,4-Trichlorobenzene	99		99		70-130	0		20
1,3,5-Trimethylbenzene	101		102		70-130	1		20
1,2,4-Trimethylbenzene	102		102		70-130	0		20
Ethyl ether	104		103		70-130	1		20
Isopropyl Ether	92		91		70-130	1		20
Ethyl-Tert-Butyl-Ether	103		104		70-130	1		20
Tertiary-Amyl Methyl Ether	100		101		70-130	1		20
1,4-Dioxane	91		83		70-130	9		20

Surrogate	LCS %Recovery	Qual	LCSD %Recovery	Qual	Acceptance Criteria
1,2-Dichloroethane-d4	93		91		70-130
Toluene-d8	98		97		70-130
4-Bromofluorobenzene	92		92		70-130
Dibromofluoromethane	100		100		70-130

PETROLEUM HYDROCARBONS

Project Name: NBHS IRA PSWS **Lab Number:** L1401583

Project Number: 115058 **Report Date:** 04/01/14

SAMPLE RESULTS

Lab ID:	L1401583-01	Date Collected:	01/16/14 12:30
Client ID:	INFLUENT	Date Received:	01/16/14
Sample Location:	NEW BEDFORD, MA	Field Prep:	Not Specified
Matrix:	Water	Extraction Method:	EPA 3510C
Analytical Method:	1,8015C(M)	Extraction Date:	01/18/14 15:10
Analytical Date:	01/20/14 16:23		
Analyst:	AR		

Parameter	Result	Qualifier	Units	RL	MDL	Dilution Factor
Petroleum Hydrocarbon Quantitation - Westborough Lab						
TPH	ND		ug/l	200	--	1

Surrogate	% Recovery	Qualifier	Acceptance Criteria
o-Terphenyl	98		40-140

Project Name: NBHS IRA PSWS
Project Number: 115058

Lab Number: L1401583
Report Date: 04/01/14

Method Blank Analysis
Batch Quality Control

Analytical Method: 1,8015C(M)
Analytical Date: 01/20/14 17:27
Analyst: AR

Extraction Method: EPA 3510C
Extraction Date: 01/18/14 15:10

Parameter	Result	Qualifier	Units	RL	MDL
Petroleum Hydrocarbon Quantitation - Westborough Lab for sample(s): 01 Batch: WG665558-1					
TPH	ND		ug/l	200	--

Surrogate	%Recovery	Qualifier	Acceptance Criteria
o-Terphenyl	103		40-140

Lab Control Sample Analysis
Batch Quality Control

Project Name: NBHS IRA PSWS
Project Number: 115058

Lab Number: L1401583
Report Date: 04/01/14

Parameter	LCS %Recovery	Qual	LCSD %Recovery	Qual	%Recovery Limits	RPD	Qual	RPD Limits
Petroleum Hydrocarbon Quantitation - Westborough Lab Associated sample(s): 01 Batch: WG665558-2								
TPH	110		-		40-140	-		40

Surrogate	LCS %Recovery	Qual	LCSD %Recovery	Qual	Acceptance Criteria
o-Terphenyl	104				40-140

Lab Duplicate Analysis
Batch Quality Control

Project Name: NBHS IRA PSWS
Project Number: 115058

Lab Number: L1401583
Report Date: 04/01/14

Parameter	Native Sample	Duplicate Sample	Units	RPD	Qual	RPD Limits
Petroleum Hydrocarbon Quantitation - Westborough Lab Associated sample(s): 01 QC Batch ID: WG665558-3 QC Sample: L1401583-01 Client ID: INFLUENT						
TPH	ND	ND	ug/l	NC		40

Surrogate	%Recovery	Qualifier	%Recovery	Qualifier	Acceptance Criteria
o-Terphenyl	98		100		40-140

PCBS

Project Name: NBHS IRA PSWS **Lab Number:** L1401583

Project Number: 115058 **Report Date:** 04/01/14

SAMPLE RESULTS

Lab ID:	L1401583-01 D	Date Collected:	01/16/14 12:30
Client ID:	INFLUENT	Date Received:	01/16/14
Sample Location:	NEW BEDFORD, MA	Field Prep:	Not Specified
Matrix:	Water	Extraction Method:	EPA 3510C
Analytical Method:	97,8082	Extraction Date:	01/18/14 11:46
Analytical Date:	01/22/14 16:37	Cleanup Method1:	EPA 3665A
Analyst:	JT	Cleanup Date1:	01/19/14
		Cleanup Method2:	EPA 3660B
		Cleanup Date2:	01/19/14

Parameter	Result	Qualifier	Units	RL	MDL	Dilution Factor	Column
MCP Polychlorinated Biphenyls - Westborough Lab							
Aroclor 1016	ND		ug/l	1.25	--	5	A
Aroclor 1221	ND		ug/l	1.25	--	5	A
Aroclor 1232	ND		ug/l	1.25	--	5	A
Aroclor 1242	ND		ug/l	1.25	--	5	A
Aroclor 1248	ND		ug/l	1.25	--	5	A
Aroclor 1254	28.2		ug/l	1.25	--	5	B
Aroclor 1260	ND		ug/l	1.25	--	5	A
Aroclor 1262	ND		ug/l	1.25	--	5	A
Aroclor 1268	ND		ug/l	1.25	--	5	A

Surrogate	% Recovery	Qualifier	Acceptance Criteria	Column
2,4,5,6-Tetrachloro-m-xylene	84		30-150	A
Decachlorobiphenyl	111		30-150	A
2,4,5,6-Tetrachloro-m-xylene	74		30-150	B
Decachlorobiphenyl	117		30-150	B

Project Name: NBHS IRA PSWS **Lab Number:** L1401583

Project Number: 115058 **Report Date:** 04/01/14

SAMPLE RESULTS

Lab ID:	L1401583-03	Date Collected:	01/16/14 12:50
Client ID:	EFFLUENT	Date Received:	01/16/14
Sample Location:	NEW BEDFORD, MA	Field Prep:	Not Specified
Matrix:	Water	Extraction Method:	EPA 3510C
Analytical Method:	97,8082	Extraction Date:	01/18/14 11:46
Analytical Date:	01/20/14 17:09	Cleanup Method1:	EPA 3665A
Analyst:	JT	Cleanup Date1:	01/19/14
		Cleanup Method2:	EPA 3660B
		Cleanup Date2:	01/19/14

Parameter	Result	Qualifier	Units	RL	MDL	Dilution Factor	Column
MCP Polychlorinated Biphenyls - Westborough Lab							
Aroclor 1016	ND		ug/l	0.250	--	1	A
Aroclor 1221	ND		ug/l	0.250	--	1	A
Aroclor 1232	ND		ug/l	0.250	--	1	A
Aroclor 1242	ND		ug/l	0.250	--	1	A
Aroclor 1248	ND		ug/l	0.250	--	1	A
Aroclor 1254	ND		ug/l	0.250	--	1	A
Aroclor 1260	ND		ug/l	0.250	--	1	A
Aroclor 1262	ND		ug/l	0.250	--	1	A
Aroclor 1268	ND		ug/l	0.250	--	1	A

Surrogate	% Recovery	Qualifier	Acceptance Criteria	Column
2,4,5,6-Tetrachloro-m-xylene	80		30-150	A
Decachlorobiphenyl	83		30-150	A
2,4,5,6-Tetrachloro-m-xylene	79		30-150	B
Decachlorobiphenyl	70		30-150	B

Project Name: NBHS IRA PSWS

Project Number: 115058

Lab Number: L1401583

Report Date: 04/01/14

Method Blank Analysis
Batch Quality Control

Analytical Method: 97,8082
Analytical Date: 01/20/14 19:42
Analyst: JT

Extraction Method: EPA 3510C
Extraction Date: 01/18/14 11:46
Cleanup Method1: EPA 3665A
Cleanup Date1: 01/19/14
Cleanup Method2: EPA 3660B
Cleanup Date2: 01/19/14

Parameter	Result	Qualifier	Units	RL	MDL	Column
MCP Polychlorinated Biphenyls - Westborough Lab for sample(s): 01,03 Batch: WG665540-1						
Aroclor 1016	ND		ug/l	0.250	--	A
Aroclor 1221	ND		ug/l	0.250	--	A
Aroclor 1232	ND		ug/l	0.250	--	A
Aroclor 1242	ND		ug/l	0.250	--	A
Aroclor 1248	ND		ug/l	0.250	--	A
Aroclor 1254	ND		ug/l	0.250	--	A
Aroclor 1260	ND		ug/l	0.250	--	A
Aroclor 1262	ND		ug/l	0.250	--	A
Aroclor 1268	ND		ug/l	0.250	--	A

Surrogate	%Recovery	Qualifier	Acceptance Criteria	Column
2,4,5,6-Tetrachloro-m-xylene	74		30-150	B
2,4,5,6-Tetrachloro-m-xylene	76		30-150	A
Decachlorobiphenyl	95		30-150	A
Decachlorobiphenyl	80		30-150	B

Lab Control Sample Analysis

Batch Quality Control

Project Name: NBHS IRA PSWS

Project Number: 115058

Lab Number: L1401583

Report Date: 04/01/14

Parameter	LCS %Recovery	Qual	LCSD %Recovery	Qual	%Recovery Limits	RPD	Qual	RPD Limits	Column
MCP Polychlorinated Biphenyls - Westborough Lab Associated sample(s): 01,03 Batch: WG665540-2 WG665540-3									
Aroclor 1016	89		100		40-140	12		20	A
Aroclor 1260	93		104		40-140	11		20	A

Surrogate	LCS %Recovery	Qual	LCSD %Recovery	Qual	Acceptance Criteria	Column
2,4,5,6-Tetrachloro-m-xylene	74		76		30-150	A
Decachlorobiphenyl	95		105		30-150	A
2,4,5,6-Tetrachloro-m-xylene	70		73		30-150	B
Decachlorobiphenyl	80		90		30-150	B

Project Name: NBHS IRA PSWS
Project Number: 115058

Lab Number: L1401583
Report Date: 04/01/14

Sample Receipt and Container Information

Were project specific reporting limits specified? YES

Reagent H2O Preserved Vials Frozen on: NA

Cooler Information Custody Seal

Cooler	
A	Absent

Container Information

Container ID	Container Type	Cooler	pH	Temp deg C	Pres	Seal	Analysis(*)
L1401583-01A	Vial HCl preserved	A	N/A	4	Y	Absent	MCP-8260-10(14)
L1401583-01B	Vial HCl preserved	A	N/A	4	Y	Absent	MCP-8260-10(14)
L1401583-01C	Vial HCl preserved	A	N/A	4	Y	Absent	MCP-8260-10(14)
L1401583-01D	Amber 1000ml unpreserved	A	7	4	Y	Absent	MCP-8082-10(365)
L1401583-01E	Amber 1000ml unpreserved	A	7	4	Y	Absent	MCP-8082-10(365)
L1401583-01F	Amber 1000ml unpreserved	A	7	4	Y	Absent	TPH-DRO-D(7)
L1401583-01G	Amber 1000ml unpreserved	A	7	4	Y	Absent	TPH-DRO-D(7)
L1401583-02A	Amber 1000ml unpreserved	A	7	4	Y	Absent	-
L1401583-02B	Amber 1000ml unpreserved	A	7	4	Y	Absent	-
L1401583-02C	Amber 1000ml unpreserved	A	7	4	Y	Absent	-
L1401583-02D	Amber 1000ml unpreserved	A	7	4	Y	Absent	-
L1401583-02U	Amber 100ml unpreserved	NA	NA		Y	Absent	HOLD(14)
L1401583-03A	Vial HCl preserved	A	N/A	4	Y	Absent	MCP-8260-10(14)
L1401583-03B	Vial HCl preserved	A	N/A	4	Y	Absent	MCP-8260-10(14)
L1401583-03C	Vial HCl preserved	A	N/A	4	Y	Absent	MCP-8260-10(14)
L1401583-03D	Amber 1000ml unpreserved	A	7	4	Y	Absent	MCP-8082-10(365)
L1401583-03E	Amber 1000ml unpreserved	A	7	4	Y	Absent	MCP-8082-10(365)
L1401583-04A	Vial HCl preserved	A	N/A	4	Y	Absent	MCP-8260-10(14)

*Values in parentheses indicate holding time in days

Project Name:	NBHS IRA PSWS	**Lab Number:**	L1401583
Project Number:	115058	**Report Date:**	04/01/14

GLOSSARY

Acronyms

EDL	- Estimated Detection Limit: This value represents the level to which target analyte concentrations are reported as estimated values, when those target analyte concentrations are quantified below the reporting limit (RL). The EDL includes any adjustments from dilutions, concentrations or moisture content, where applicable. The use of EDLs is specific to the analysis of PAHs using Solid-Phase Microextraction (SPME).
EPA	- Environmental Protection Agency.
LCS	- Laboratory Control Sample: A sample matrix, free from the analytes of interest, spiked with verified known amounts of analytes or a material containing known and verified amounts of analytes.
LCSD	- Laboratory Control Sample Duplicate: Refer to LCS.
LFB	- Laboratory Fortified Blank: A sample matrix, free from the analytes of interest, spiked with verified known amounts of analytes or a material containing known and verified amounts of analytes.
MDL	- Method Detection Limit: This value represents the level to which target analyte concentrations are reported as estimated values, when those target analyte concentrations are quantified below the reporting limit (RL). The MDL includes any adjustments from dilutions, concentrations or moisture content, where applicable.
MS	- Matrix Spike Sample: A sample prepared by adding a known mass of target analyte to a specified amount of matrix sample for which an independent estimate of target analyte concentration is available.
MSD	- Matrix Spike Sample Duplicate: Refer to MS.
NA	- Not Applicable.
NC	- Not Calculated: Term is utilized when one or more of the results utilized in the calculation are non-detect at the parameter's reporting unit.
NI	- Not Ignitable.
RL	- Reporting Limit: The value at which an instrument can accurately measure an analyte at a specific concentration. The RL includes any adjustments from dilutions, concentrations or moisture content, where applicable.
RPD	- Relative Percent Difference: The results from matrix and/or matrix spike duplicates are primarily designed to assess the precision of analytical results in a given matrix and are expressed as relative percent difference (RPD). Values which are less than five times the reporting limit for any individual parameter are evaluated by utilizing the absolute difference between the values; although the RPD value will be provided in the report.
SRM	- Standard Reference Material: A reference sample of a known or certified value that is of the same or similar matrix as the associated field samples.

Footnotes

1	- The reference for this analyte should be considered modified since this analyte is absent from the target analyte list of the original method.

Terms

Analytical Method: Both the document from which the method originates and the analytical reference method. (Example: EPA 8260B is shown as 1,8260B.) The codes for the reference method documents are provided in the References section of the Addendum.

Data Qualifiers

A	- Spectra identified as "Aldol Condensation Product".
B	- The analyte was detected above the reporting limit in the associated method blank. Flag only applies to associated field samples that have detectable concentrations of the analyte at less than ten times (10x) the concentration found in the blank. For MCP-related projects, flag only applies to associated field samples that have detectable concentrations of the analyte at less than ten times (10x) the concentration found in the blank. For DOD-related projects, flag only applies to associated field samples that have detectable concentrations of the analyte at less than ten times (10x) the concentration found in the blank AND the analyte was detected above one-half the reporting limit (or above the reporting limit for common lab contaminants) in the associated method blank. For NJ-Air-related projects, flag only applies to associated field samples that have detectable concentrations of the analyte above the reporting limit.
C	- Co-elution: The target analyte co-elutes with a known lab standard (i.e. surrogate, internal standards, etc.) for co-extracted analyses.
D	- Concentration of analyte was quantified from diluted analysis. Flag only applies to field samples that have detectable concentrations of the analyte.
E	- Concentration of analyte exceeds the range of the calibration curve and/or linear range of the instrument.
G	- The concentration may be biased high due to matrix interferences (i.e, co-elution) with non-target compound(s). The result should be considered estimated.
H	- The analysis of pH was performed beyond the regulatory-required holding time of 15 minutes from the time of sample collection.
I	- The lower value for the two columns has been reported due to obvious interference.

Report Format: Data Usability Report

Project Name:	NBHS IRA PSWS	**Lab Number:**	L1401583
Project Number:	115058	**Report Date:**	04/01/14

Data Qualifiers

M - Reporting Limit (RL) exceeds the MCP CAM Reporting Limit for this analyte.

NJ - Presumptive evidence of compound. This represents an estimated concentration for Tentatively Identified Compounds (TICs), where the identification is based on a mass spectral library search.

P - The RPD between the results for the two columns exceeds the method-specified criteria.

Q - The quality control sample exceeds the associated acceptance criteria. For DOD-related projects, LCS and/or Continuing Calibration Standard exceedences are also qualified on all associated sample results. Note: This flag is not applicable for matrix spike recoveries when the sample concentration is greater than 4x the spike added or for batch duplicate RPD when the sample concentrations are less than 5x the RL. (Metals only.)

R - Analytical results are from sample re-analysis.

RE - Analytical results are from sample re-extraction.

S - Analytical results are from modified screening analysis.

J - Estimated value. This represents an estimated concentration for Tentatively Identified Compounds (TICs).

ND - Not detected at the reporting limit (RL) for the sample.

Report Format: Data Usability Report

Project Name: NBHS IRA PSWS **Lab Number:** L1401583
Project Number: 115058 **Report Date:** 04/01/14

REFERENCES

1 Test Methods for Evaluating Solid Waste: Physical/Chemical Methods. EPA SW-846. Third Edition. Updates I - IV, 2007.

97 EPA Test Methods (SW-846) with QC Requirements & Performance Standards for the Analysis of EPA SW-846 Methods under the Massachusetts Contingency Plan, WSC-CAM-IIA, IIB, IIIA, IIIB, IIIC, IIID, VA, VB, VC, VIA, VIB, VIIIA and VIIIB, July 2010.

LIMITATION OF LIABILITIES

Alpha Analytical performs services with reasonable care and diligence normal to the analytical testing laboratory industry. In the event of an error, the sole and exclusive responsibility of Alpha Analytical shall be to re-perform the work at it's own expense. In no event shall Alpha Analytical be held liable for any incidental, consequential or special damages, including but not limited to, damages in any way connected with the use of, interpretation of, information or analysis provided by Alpha Analytical.

We strongly urge our clients to comply with EPA protocol regarding sample volume, preservation, cooling, containers, sampling procedures, holding time and splitting of samples in the field.

Certification Information

Last revised December 11, 2013

The following analytes are not included in our NELAP Scope of Accreditation:

Westborough Facility
EPA 524.2: Acetone, 2-Butanone (Methyl ethyl ketone (MEK)), Tert-butyl alcohol, 2-Hexanone, Tetrahydrofuran, 1,3,5-Trichlorobenzene, 4-Methyl-2-pentanone (MIBK), Carbon disulfide, Diethyl ether.
EPA 8260C: 1,2,4,5-Tetramethylbenzene, 4-Ethyltoluene, Iodomethane (methyl iodide), Methyl methacrylate, Azobenzene.
EPA 8330A/B: PETN, Picric Acid, Nitroglycerine, 2,6-DANT, 2,4-DANT.
EPA 8270D: 1-Methylnaphthalene, Dimethylnaphthalene,1,4-Diphenylhydrazine.
EPA 625: 4-Chloroaniline, 4-Methylphenol.
SM4500: Soil: Total Phosphorus, TKN, NO2, NO3.
EPA 9071: Total Petroleum Hydrocarbons, Oil & Grease.

Mansfield Facility
EPA 8270D: Biphenyl.
EPA TO-15: Halothane, 2,4,4-Trimethyl-2-pentene, 2,4,4-Trimethyl-1-pentene, Thiophene, 2-Methylthiophene, 3-Methylthiophene, 2-Ethylthiophene, 1,2,3-Trimethylbenzene, Indan, Indene, 1,2,4,5-Tetramethylbenzene, Benzothiophene, 1-Methylnaphthalene.

The following analytes are included in our Massachusetts DEP Scope of Accreditation, Westborough Facility:

Drinking Water
EPA 200.8: Sb,As,Ba,Be,Cd,Cr,Cu,Pb,Ni,Se,Tl; **EPA 200.7**: Ba,Be,Ca,Cd,Cr,Cu,Na; **EPA 245.1:** Mercury;
EPA 300.0: Nitrate-N, Fluoride, Sulfate; **EPA 353.2**: Nitrate-N, Nitrite-N; **SM4500NO3-F**: Nitrate-N, Nitrite-N; **SM4500F-C, SM4500CN-CE, EPA 180.1, SM2130B, SM4500Cl-D, SM2320B, SM2540C, SM4500H-B**
EPA 332: Perchlorate.
Microbiology: **SM9215B; SM9223-P/A, SM9223B-Colilert-QT, Enterolert-QT.**

Non-Potable Water
EPA 200.8: Al,Sb,As,Be,Cd,Cr,Cu,Pb,Mn,Ni,Se,Ag,Tl,Zn;
EPA 200.7: Al,Sb,As,Be,Cd,Ca,Cr,Co,Cu,Fe,Pb,Mg,Mn,Mo,Ni,K,Se,Ag,Na,Sr,Ti,Tl,V,Zn;
EPA 245.1, SM4500H,B, EPA 120.1, SM2510B, SM2540C, SM2340B, SM2320B, SM4500CL-E, SM4500F-BC, SM426C, SM4500NH3-BH, **EPA 350.1**: Ammonia-N, **LACHAT 10-107-06-1-B**: Ammonia-N, **SM4500NO3-F,**
EPA 353.2: Nitrate-N**, SM4500NH3-BC-NES, EPA 351.1, SM4500P-E, SM4500P-B, E, SM5220D, EPA 410.4, SM5210B, SM5310C, SM4500CL-D, EPA 1664, SM14 510AC, EPA 420.1, SM4500-CN-CE, SM2540D.**
EPA 624: Volatile Halocarbons & Aromatics,
EPA 608: Chlordane, Toxaphene, Aldrin, alpha-BHC, beta-BHC, gamma-BHC, delta-BHC, Dieldrin, DDD, DDE, DDT, Endosulfan I, Endosulfan II, Endosulfan sulfate, Endrin, Endrin Aldehyde, Heptachlor, Heptachlor Epoxide, PCBs
EPA 625: SVOC (Acid/Base/Neutral Extractables), **EPA 600/4-81-045**: PCB-Oil.
Microbiology: **SM9223B-Colilert-QT; Enterolert-QT, SM9222D-MF**.

For a complete listing of analytes and methods, please contact your Alpha Project Manager.

Serial_No:04011414:40

CHAIN OF CUSTODY

PAGE 1 OF 1

ALPHA ANALYTICAL — World Class Chemistry

8 Walkup Drive, Westboro, MA 01581, Tel: 508-898-9220
320 Forbes Blvd, Mansfield, MA 02048, Tel: 508-822-9300

Date Rec'd in Lab: 1/16/14

ALPHA Job #: L1401583

Client Information

Client: TRC
Address: 650 Suffolk street, Lowell, MA 01854
Phone: 978-970-5600
Email: aleonard@TRCsolutions.com, dsullivan@

Project Information

Project Name: NBHS IRA PSWS
Project Location: New Bedford, MA
Project #: 115058
Project Manager: David Sullivan
ALPHA Quote #:

Turn-Around Time

☒ Standard ☐ RUSH *(only confirmed if pre-approved!)*

Date Due: 1/30/14

Report Information - Data Deliverables

☐ ADEx ☒ EMAIL

Billing Information

☐ Same as Client info PO #: CNT5058

Regulatory Requirements & Project Information Requirements

☐ Yes ☐ No MA MCP Analytical Methods
☐ Yes ☐ No CT RCP Analytical Methods
☐ Yes ☐ No Matrix Spike Required on this SDG? (Required for MCP Inorganics)
☐ Yes ☐ No GW1 Standards (Info Required for Metals & EPH with Targets)
☐ Yes ☐ No NPDES RGP
☐ Other State /Fed Program MA Criteria MCP

Additional Project Information:

* PCB + TPH to be filtered by lab using 0.2 um filter

TPH detection limit to be < 200 ppb

ANALYSIS

VOC: ☒ 8260 ☐ 624 ☐ 524.2; SVOC: ☐ ABN ☐ PAH; METALS: ☐ MCP 13 ☐ MCP 14 ☐ RCP 15; METALS: ☐ RCRA5 ☐ RCRA8 ☐ PP13; EPH: ☐ Ranges & Targets ☐ Ranges Only; VPH: ☐ Ranges & Targets ☐ Ranges Only; ☒ PCB ☐ PEST; TPH: ☒ Quant Only ☐ Fingerprint; PCB (0.2 um Filtered)*; TPH (0.2 um Filtered)*

SAMPLE INFO
Filtration: ☐ Field ☐ Lab to do
Preservation: ☐ Lab to do

ALPHA Lab ID (Lab Use Only)	Sample ID	Collection Date	Collection Time	Sample Matrix	Sampler Initials	VOC 8260	SVOC	METALS (MCP)	METALS (RCRA)	EPH	VPH	PCB	TPH Quant Only	PCB (0.2 um Filtered)*	TPH (0.2 um Filtered)*	Sample Comments	Total # Bottles
01583-01	Influent	1/16/14	12:30	I	SB	X						X	X	X	X		11
02	Effluent	1/16/14	12:50	E	SB	X						X					5
03	Trip Blank					X											
Container Type						V						A	A	A	A		
Preservative						B						A	A	A	A		

Container Type
P= Plastic
A= Amber glass
V= Vial
G= Glass
B= Bacteria cup
C= Cube
O= Other
E= Encore
D= BOD Bottle

Preservative
A= None
B= HCl
C= HNO_3
D= H_2SO_4
E= NaOH
F= MeOH
G= $NaHSO_4$
H = $Na_2S_2O_3$
I= Ascorbic Acid
J = NH_4Cl
K= Zn Acetate
O= Other

Relinquished By:	Date/Time	Received By:	Date/Time
Stephen P[illegible]	1/16/14 1640	MCM	1/16/14 1640
MCM	1/16/14 1735	Richard Scott	1/16/14 1735

All samples submitted are subject to Alpha's Terms and Conditions. See reverse side.

FORM NO: 01-01 (rev. 12-Mar-2012)

7A
Volatile Organics CONTINUING CALIBRATION CHECK

Lab Name: Alpha Analytical Labs

SDG No.: L1401583

Instrument ID: Quimby.i Calibration Date: 20-JAN-2014 Time: 05:03

Lab File ID: 0120A02 Init. Calib. Date(s): 21-DEC-2 21-DEC-2

Sample No: 8260 CCAL Init. Calib. Times : 17:04 20:13

Compound	RRF	RRF	MIN RRF	%D	MAX %D	
dichlorodifluoromethane	.35778	.41872	.1	-17	20	
chloromethane	.55506	.50038	.1	10	20	
vinyl chloride	.56939	.56208	.1	1	20	
bromomethane	.33999	.29618	.1	13	20	
chloroethane	.35909	.34578	.1	4	20	
trichlorofluoromethane	.63688	.66372	.1	-4	20	
ethyl ether	.1843	.19094	.05	-4	20	
acrolein	.05569	.04804	.05	14	20	
freon-113	.38903	.43085	.1	-11	20	
acetone	.08811	.10298	.1	-17	20	F
1,1,-dichloroethene	.36922	.39449	.1	-7	20	
tert-butyl alcohol	500	475	.05	5	20	
iodomethane	.36512	.25678	.05	30	20	F
methyl acetate	.16993	.16591	.01	2	20	
methylene chloride	.43413	.43338	.1	0	20	
carbon disulfide	1.1533	1.0972	.1	5	20	
acrylonitrile	.09927	.09567	.05	4	20	
methyl tert butyl ether	.6119	.63309	.1	-3	20	
Halothane	.31273	.33382	.05	-7	20	
trans-1,2-dichloroethene	.40679	.42799	.1	-5	20	
Diisopropyl Ether	1.3181	1.2107	.05	8	20	
vinyl acetate	100	83.113	.05	17	20	
1,1-dichloroethane	.75596	.74743	.2	1	20	
Ethyl-Tert-Butyl-Ether	.84041	.86908	.05	-3	20	
2-butanone	.10266	.09902	.1	4	20	
2,2-dichloropropane	100	110	.05	-10	20	
ethyl acetate	.22846	.20751	.05	9	20	
cis-1,2-dichloroethene	.45207	.45983	.1	-2	20	
chloroform	.703	.72572	.2	-3	20	
bromochloromethane	.18162	.19738	.05	-9	20	
tetrahydrofuran	.06852	.05948	.05	13	20	
1,1,1-trichloroethane	.52952	.58809	.1	-11	20	
cyclohexane	.84779	.83235	.01	2	30	
1,1-dichloropropene	.57625	.58682	.05	-2	20	
carbontetrachloride	100	94.906	.1	5	20	
Tertiary-Amyl Methyl Ether	100	101	.05	-1	20	
1,2-dichloroethane	.47638	.46163	.1	3	20	
benzene	1.7286	1.7738	.5	-3	20	

FORM VII MCP-8260-10

7A
CONTINUING CALIBRATION CHECK

Lab Name: Alpha Analytical Labs

SDG No.: L1401583

Instrument ID: Quimby.i Calibration Date: 20-JAN-2014 Time: 05:03

Lab File ID: 0120A02 Init. Calib. Date(s): 21-DEC-2 21-DEC-2

Sample No: 8260 CCAL Init. Calib. Times : 17:04 20:13

Compound	RRF	RRF	MIN RRF	%D	MAX %D	
trichloroethene	.41357	.43174	.2	-4	20	
methyl cyclohexane	.73553	.78969	.01	-7	30	
1,2-dichloropropane	.42692	.4261	.1	0	20	
bromodichloromethane	.47774	.48038	.2	-1	20	
1,4-dioxane	.00264	.00241	.05	9	20	F
dibromomethane	.19285	.19764	.05	-2	20	
2-chloroethylvinyl ether	.05073	------	.05	---	20	F
4-methyl-2-pentanone	.09004	.0804	.1	11	20	F
cis-1,3-dichloropropene	100	99	.2	1	20	
toluene	1.3546	1.3712	.4	-1	20	
ethyl-methacrylate	100	96.961	.01	3	0	F
trans-1,3-dichloropropene	100	96.769	.1	3	20	
2-hexanone	.18354	.1572	.1	14	20	
1,1,2-trichloroethane	.27883	.28125	.1	-1	20	
1,3-dichloropropane	.60059	.59116	.05	2	20	
tetrachloroethene	.59429	.65928	.2	-11	20	
chlorodibromomethane	.37178	.38682	.1	-4	20	
1,2-dibromoethane	.29775	.29977	.1	-1	20	
chlorobenzene	1.4594	1.5269	.5	-5	20	
1,1,1,2-tetrachloroethane	100	104	.05	-4	20	
ethyl benzene	2.6362	2.7797	.1	-5	20	
p/m xylene	1.1379	1.1484	.1	-1	20	
o xylene	1.0637	1.0943	.3	-3	20	
styrene	1.6288	1.7738	.31	-9	20	
isopropylbenzene	2.7116	2.9273	.1	-8	20	
bromoform	100	102	.1	-2	20	
1,4-dichlorobutane	1.0881	.95637	.01	12	30	
1,1,2,2,-tetrachloroethane	.67753	.63263	.3	7	20	
1,2,3-trichloropropane	.514	.48139	.05	6	20	
trans-1,4-dichloro-2-butene	.20047	.15517	.05	23	20	F
n-propylbenzene	5.1590	5.3104	.05	-3	20	
bromobenzene	1.1134	1.1534	.05	-4	20	
4-ethyltoluene	2.3765	2.6833	.05	-13	20	
1,3,5-trimethybenzene	3.9832	4.0381	.05	-1	20	
2-chlorotoluene	3.7248	3.5744	.05	4	20	
4-chorotoluene	3.3375	3.2866	.05	2	20	
tert-butylbenzene	3.5155	3.5838	.05	-2	20	
1,2,4-trimethylbenzene	3.758	3.8284	.05	-2	20	

FORM VII MCP-8260-10

7A
CONTINUING CALIBRATION CHECK

Lab Name: Alpha Analytical Labs

SDG No.: L1401583

Instrument ID: Quimby.i Calibration Date: 20-JAN-2014 Time: 05:03

Lab File ID: 0120A02 Init. Calib. Date(s): 21-DEC-2 21-DEC-2

Sample No: 8260 CCAL Init. Calib. Times : 17:04 20:13

Compound	RRF	RRF	MIN RRF	%D	MAX %D
sec-butylbenzene	5.0101	5.2692	.05	-5	20
p-isopropyltoluene	4.2069	4.4519	.05	-6	20
1,3-dichlorobenzene	2.2639	2.3251	.6	-3	20
1,4-dichlorobenzene	2.2226	2.2895	.5	-3	20
n-butylbenzene	4.4183	4.4001	.05	0	20
1,2,4,5-tetramethylbenezene	1.2943	1.4056	.05	-9	20
1,2-dichlorobenzene	1.9862	2.0518	.4	-3	20
p-diethylbenzene	1.6487	1.8310	.05	-11	20
1,2-dibromo-3-chloropropane	100	90.628	.05	9	20
1,3,5-trichlorobenzene	1.4116	1.4738	.01	-4	30
1,2,4-trichlorobenzene	1.1168	1.1022	.2	1	20
hexachlorobutadiene	.49694	.53686	.05	-8	20
naphthalene	1.8020	1.6823	.05	7	20
1,2,3-trichlorobenzene	.86324	.85792	.05	1	20
dibromofluoromethane	.23485	.23539	.05	0	20
1,2-dichloroethane-d4	.24724	.22908	.05	7	20
toluene-d8	1.1848	1.1660	.05	2	20
4-bromofluorobenzene	.84462	.77573	.05	8	20

FORM VII MCP-8260-10

ANALYTICAL REPORT

Lab Number:	L1402100
Client:	TRC Environmental Consultants Wannalancit Mills 650 Suffolk Street Lowell, MA 01854
ATTN:	David Sullivan
Phone:	(978) 656-3565
Project Name:	NBHS IRA PSWA
Project Number:	115058
Report Date:	01/31/14

The original project report/data package is held by Alpha Analytical. This report/data package is paginated and should be reproduced only in its entirety. Alpha Analytical holds no responsibility for results and/or data that are not consistent with the original.

Certifications & Approvals: MA (M-MA086), NY (11148), CT (PH-0574), NH (2003), NJ NELAP (MA935), RI (LAO00065), ME (MA00086), PA (68-03671), USDA (Permit #P-330-11-00240), NC (666), TX (T104704476), DOD (L2217), US Army Corps of Engineers.

Eight Walkup Drive, Westborough, MA 01581-1019
508-898-9220 (Fax) 508-898-9193 800-624-9220 - www.alphalab.com

Project Name: NBHS IRA PSWA
Project Number: 115058

Lab Number: L1402100
Report Date: 01/31/14

Alpha Sample ID	Client ID	Sample Location	Collection Date/Time
L1402100-01	INFLUENT (FILTERED)	NEW BEDFORD, MA	01/16/14 12:30

Project Name: NBHS IRA PSWA **Lab Number:** L1402100

Project Number: 115058 **Report Date:** 01/31/14

MADEP MCP Response Action Analytical Report Certification

This form provides certifications for all samples performed by MCP methods. Please refer to the Sample Results and Container Information sections of this report for specification of MCP methods used for each analysis. The following questions pertain only to MCP Analytical Methods.

An affirmative response to questions A through F is required for "Presumptive Certainty" status		
A	Were all samples received in a condition consistent with those described on the Chain-of-Custody, properly preserved (including temperature) in the field or laboratory, and prepared/analyzed within method holding times?	YES
B	Were the analytical method(s) and all associated QC requirements specified in the selected CAM protocol(s) followed?	YES
C	Were all required corrective actions and analytical response actions specified in the selected CAM protocol(s) implemented for all identified performance standard non-conformances?	YES
D	Does the laboratory report comply with all the reporting requirements specified in CAM VII A, "Quality Assurance and Quality Control Guidelines for the Acquisition and Reporting of Analytical Data?"	YES
E a.	VPH, EPH, and APH Methods only: Was each method conducted without significant modification(s)? (Refer to the individual method(s) for a list of significant modifications).	N/A
E b.	APH and TO-15 Methods only: Was the complete analyte list reported for each method?	N/A
F	Were all applicable CAM protocol QC and performance standard non-conformances identified and evaluated in a laboratory narrative (including all "No" responses to Questions A through E)?	YES

A response to questions G, H and I is required for "Presumptive Certainty" status		
G	Were the reporting limits at or below all CAM reporting limits specified in the selected CAM protocol(s)?	YES
H	Were all QC performance standards specified in the CAM protocol(s) achieved?	YES
I	Were results reported for the complete analyte list specified in the selected CAM protocol(s)?	YES

For any questions answered "No", please refer to the case narrative section on the following page(s).

Please note that sample matrix information is located in the Sample Results section of this report.

Project Name: NBHS IRA PSWA **Lab Number:** L1402100
Project Number: 115058 **Report Date:** 01/31/14

Case Narrative

The samples were received in accordance with the Chain of Custody and no significant deviations were encountered during the preparation or analysis unless otherwise noted. Sample Receipt, Container Information, and the Chain of Custody are located at the back of the report.

Results contained within this report relate only to the samples submitted under this Alpha Lab Number and meet all of the requirements of NELAC, for all NELAC accredited parameters. The data presented in this report is organized by parameter (i.e. VOC, SVOC, etc.). Sample specific Quality Control data (i.e. Surrogate Spike Recovery) is reported at the end of the target analyte list for each individual sample, followed by the Laboratory Batch Quality Control at the end of each parameter. If a sample was re-analyzed or re-extracted due to a required quality control corrective action and if both sets of data are reported, the Laboratory ID of the re-analysis or re-extraction is designated with an "R" or "RE", respectively. When multiple Batch Quality Control elements are reported (e.g. more than one LCS), the associated samples for each element are noted in the grey shaded header line of each data table. Any Laboratory Batch, Sample Specific % recovery or RPD value that is outside the listed Acceptance Criteria is bolded in the report. Performance criteria for CAM and RCP methods allow for some LCS compound failures to occur and still be within method compliance. In these instances, the specific failures are not narrated but are noted in the associated QC table. This information is also incorporated in the Data Usability format for our Data Merger tool where it can be reviewed along with any associated usability implications. Soil/sediments, solids and tissues are reported on a dry weight basis unless otherwise noted. Definitions of all data qualifiers and acronyms used in this report are provided in the Glossary located at the back of the report.

In reference to questions H (CAM) or 4 (RCP) when "NO" is checked, the performance criteria for CAM and RCP methods allow for some quality control failures to occur and still be within method compliance. In these instances the specific failure is not narrated but noted in the associated QC table. The information is also incorporated in the Data Usability format of our Data Merger tool where it can be reviewed along with any associated usability implications.

Please see the associated ADEx data file for a comparison of laboratory reporting limits that were achieved with the regulatory Numerical Standards requested on the Chain of Custody.

HOLD POLICY
For samples submitted on hold, Alpha's policy is to hold samples (with the exception of Air canisters) free of charge for 21 calendar days from the date the project is completed. After 21 calendar days, we will dispose of all samples submitted including those put on hold unless you have contacted your Client Service Representative and made arrangements for Alpha to continue to hold the samples. Air canisters will be disposed after 3 business days from the date the project is completed.

Please contact Client Services at 800-624-9220 with any questions.

Project Name:	NBHS IRA PSWA	**Lab Number:**	L1402100
Project Number:	115058	**Report Date:**	01/31/14

Case Narrative (continued)

MCP Related Narratives

Report Submission

All MCP required questions were answered with affirmative responses; therefore, there are no relevant protocol-specific QC and/or performance standard non-conformances to report.

I, the undersigned, attest under the pains and penalties of perjury that, to the best of my knowledge and belief and based upon my personal inquiry of those responsible for providing the information contained in this analytical report, such information is accurate and complete. This certificate of analysis is not complete unless this page accompanies any and all pages of this report.

Authorized Signature: Cynthia McQueen

Title: Technical Director/Representative

Date: 01/31/14

ORGANICS

PCBS

Project Name: NBHS IRA PSWA **Lab Number:** L1402100

Project Number: 115058 **Report Date:** 01/31/14

SAMPLE RESULTS

Lab ID:	L1402100-01	Date Collected:	01/16/14 12:30
Client ID:	INFLUENT (FILTERED)	Date Received:	01/16/14
Sample Location:	NEW BEDFORD, MA	Field Prep:	Not Specified
Matrix:	Water	Extraction Method:	EPA 3510C
Analytical Method:	97,8082A	Extraction Date:	01/25/14 00:30
Analytical Date:	01/25/14 18:47	Cleanup Method1:	EPA 3665A
Analyst:	TQ	Cleanup Date1:	01/25/14
		Cleanup Method2:	EPA 3660B
		Cleanup Date2:	01/25/14

Parameter	Result	Qualifier	Units	RL	MDL	Dilution Factor	Column
MCP Polychlorinated Biphenyls - Westborough Lab							
Aroclor 1016	ND		ug/l	0.250	--	1	A
Aroclor 1221	ND		ug/l	0.250	--	1	A
Aroclor 1232	ND		ug/l	0.250	--	1	A
Aroclor 1242	ND		ug/l	0.250	--	1	A
Aroclor 1248	ND		ug/l	0.250	--	1	A
Aroclor 1254	ND		ug/l	0.250	--	1	A
Aroclor 1260	ND		ug/l	0.250	--	1	A
Aroclor 1262	ND		ug/l	0.250	--	1	A
Aroclor 1268	ND		ug/l	0.250	--	1	A

Surrogate	% Recovery	Qualifier	Acceptance Criteria	Column
2,4,5,6-Tetrachloro-m-xylene	62		30-150	A
Decachlorobiphenyl	77		30-150	A
2,4,5,6-Tetrachloro-m-xylene	70		30-150	B
Decachlorobiphenyl	92		30-150	B

Project Name: NBHS IRA PSWA

Project Number: 115058

Lab Number: L1402100

Report Date: 01/31/14

Method Blank Analysis
Batch Quality Control

Analytical Method: 97,8082A
Analytical Date: 01/25/14 19:03
Analyst: TQ

Extraction Method: EPA 3510C
Extraction Date: 01/25/14 00:30
Cleanup Method1: EPA 3665A
Cleanup Date1: 01/25/14
Cleanup Method2: EPA 3660B
Cleanup Date2: 01/25/14

Parameter	Result	Qualifier	Units	RL	MDL	Column
MCP Polychlorinated Biphenyls - Westborough Lab for sample(s): 01 Batch: WG666795-1						
Aroclor 1016	ND		ug/l	0.250	--	A
Aroclor 1221	ND		ug/l	0.250	--	A
Aroclor 1232	ND		ug/l	0.250	--	A
Aroclor 1242	ND		ug/l	0.250	--	A
Aroclor 1248	ND		ug/l	0.250	--	A
Aroclor 1254	ND		ug/l	0.250	--	A
Aroclor 1260	ND		ug/l	0.250	--	A
Aroclor 1262	ND		ug/l	0.250	--	A
Aroclor 1268	ND		ug/l	0.250	--	A

Surrogate	%Recovery	Qualifier	Acceptance Criteria	Column
2,4,5,6-Tetrachloro-m-xylene	57		30-150	A
Decachlorobiphenyl	78		30-150	A
2,4,5,6-Tetrachloro-m-xylene	62		30-150	B
Decachlorobiphenyl	93		30-150	B

Lab Control Sample Analysis

Batch Quality Control

Project Name: NBHS IRA PSWA

Project Number: 115058

Lab Number: L1402100

Report Date: 01/31/14

Parameter	LCS %Recovery	Qual	LCSD %Recovery	Qual	%Recovery Limits	RPD	Qual	RPD Limits	Column
MCP Polychlorinated Biphenyls - Westborough Lab Associated sample(s): 01 Batch: WG666795-2 WG666795-3									
Aroclor 1016	70		75		40-140	7		20	A
Aroclor 1260	67		71		40-140	6		20	A

Surrogate	LCS %Recovery	Qual	LCSD %Recovery	Qual	Acceptance Criteria	Column
2,4,5,6-Tetrachloro-m-xylene	64		65		30-150	A
Decachlorobiphenyl	78		87		30-150	A
2,4,5,6-Tetrachloro-m-xylene	72		73		30-150	B
Decachlorobiphenyl	97		107		30-150	B

Project Name: NBHS IRA PSWA
Project Number: 115058

Lab Number: L1402100
Report Date: 01/31/14

Sample Receipt and Container Information

Were project specific reporting limits specified? YES

Reagent H2O Preserved Vials Frozen on: NA

Cooler Information Custody Seal

Cooler	
A	Absent

Container Information

Container ID	Container Type	Cooler	pH	Temp deg C	Pres	Seal	Analysis(*)
L1402100-01A	Amber 1000ml unpreserved	A	7	4	Y	Absent	FILTER-EXT(1)
L1402100-01B	Amber 1000ml unpreserved	A	7	4	Y	Absent	FILTER-EXT(1)
L1402100-01X	Amber 1000ml unpreserved split	A	7	4	Y	Absent	MCP-8082-10(365)
L1402100-01Y	Amber 1000ml unpreserved split	A	7	4	Y	Absent	MCP-8082-10(365)

*Values in parentheses indicate holding time in days

Project Name:	NBHS IRA PSWA	**Lab Number:**	L1402100
Project Number:	115058	**Report Date:**	01/31/14

GLOSSARY

Acronyms

EDL	- Estimated Detection Limit: This value represents the level to which target analyte concentrations are reported as estimated values, when those target analyte concentrations are quantified below the reporting limit (RL). The EDL includes any adjustments from dilutions, concentrations or moisture content, where applicable. The use of EDLs is specific to the analysis of PAHs using Solid-Phase Microextraction (SPME).
EPA	- Environmental Protection Agency.
LCS	- Laboratory Control Sample: A sample matrix, free from the analytes of interest, spiked with verified known amounts of analytes or a material containing known and verified amounts of analytes.
LCSD	- Laboratory Control Sample Duplicate: Refer to LCS.
LFB	- Laboratory Fortified Blank: A sample matrix, free from the analytes of interest, spiked with verified known amounts of analytes or a material containing known and verified amounts of analytes.
MDL	- Method Detection Limit: This value represents the level to which target analyte concentrations are reported as estimated values, when those target analyte concentrations are quantified below the reporting limit (RL). The MDL includes any adjustments from dilutions, concentrations or moisture content, where applicable.
MS	- Matrix Spike Sample: A sample prepared by adding a known mass of target analyte to a specified amount of matrix sample for which an independent estimate of target analyte concentration is available.
MSD	- Matrix Spike Sample Duplicate: Refer to MS.
NA	- Not Applicable.
NC	- Not Calculated: Term is utilized when one or more of the results utilized in the calculation are non-detect at the parameter's reporting unit.
NI	- Not Ignitable.
RL	- Reporting Limit: The value at which an instrument can accurately measure an analyte at a specific concentration. The RL includes any adjustments from dilutions, concentrations or moisture content, where applicable.
RPD	- Relative Percent Difference: The results from matrix and/or matrix spike duplicates are primarily designed to assess the precision of analytical results in a given matrix and are expressed as relative percent difference (RPD). Values which are less than five times the reporting limit for any individual parameter are evaluated by utilizing the absolute difference between the values; although the RPD value will be provided in the report.
SRM	- Standard Reference Material: A reference sample of a known or certified value that is of the same or similar matrix as the associated field samples.

Footnotes

1	- The reference for this analyte should be considered modified since this analyte is absent from the target analyte list of the original method.

Terms

Analytical Method: Both the document from which the method originates and the analytical reference method. (Example: EPA 8260B is shown as 1,8260B.) The codes for the reference method documents are provided in the References section of the Addendum.

Data Qualifiers

A	- Spectra identified as "Aldol Condensation Product".
B	- The analyte was detected above the reporting limit in the associated method blank. Flag only applies to associated field samples that have detectable concentrations of the analyte at less than ten times (10x) the concentration found in the blank. For MCP-related projects, flag only applies to associated field samples that have detectable concentrations of the analyte at less than ten times (10x) the concentration found in the blank. For DOD-related projects, flag only applies to associated field samples that have detectable concentrations of the analyte at less than ten times (10x) the concentration found in the blank AND the analyte was detected above one-half the reporting limit (or above the reporting limit for common lab contaminants) in the associated method blank. For NJ-Air-related projects, flag only applies to associated field samples that have detectable concentrations of the analyte above the reporting limit.
C	- Co-elution: The target analyte co-elutes with a known lab standard (i.e. surrogate, internal standards, etc.) for co-extracted analyses.
D	- Concentration of analyte was quantified from diluted analysis. Flag only applies to field samples that have detectable concentrations of the analyte.
E	- Concentration of analyte exceeds the range of the calibration curve and/or linear range of the instrument.
G	- The concentration may be biased high due to matrix interferences (i.e, co-elution) with non-target compound(s). The result should be considered estimated.
H	- The analysis of pH was performed beyond the regulatory-required holding time of 15 minutes from the time of sample collection.
I	- The lower value for the two columns has been reported due to obvious interference.

Report Format: Data Usability Report

Project Name:	NBHS IRA PSWA	**Lab Number:**	L1402100
Project Number:	115058	**Report Date:**	01/31/14

Data Qualifiers

M - Reporting Limit (RL) exceeds the MCP CAM Reporting Limit for this analyte.

NJ - Presumptive evidence of compound. This represents an estimated concentration for Tentatively Identified Compounds (TICs), where the identification is based on a mass spectral library search.

P - The RPD between the results for the two columns exceeds the method-specified criteria.

Q - The quality control sample exceeds the associated acceptance criteria. For DOD-related projects, LCS and/or Continuing Calibration Standard exceedences are also qualified on all associated sample results. Note: This flag is not applicable for matrix spike recoveries when the sample concentration is greater than 4x the spike added or for batch duplicate RPD when the sample concentrations are less than 5x the RL. (Metals only.)

R - Analytical results are from sample re-analysis.

RE - Analytical results are from sample re-extraction.

S - Analytical results are from modified screening analysis.

J - Estimated value. This represents an estimated concentration for Tentatively Identified Compounds (TICs).

ND - Not detected at the reporting limit (RL) for the sample.

Report Format: Data Usability Report

Project Name: NBHS IRA PSWA **Lab Number:** L1402100
Project Number: 115058 **Report Date:** 01/31/14

REFERENCES

97 EPA Test Methods (SW-846) with QC Requirements & Performance Standards for the Analysis of EPA SW-846 Methods under the Massachusetts Contingency Plan, WSC-CAM-IIA, IIB, IIIA, IIIB, IIIC, IIID, VA, VB, VC, VIA, VIB, VIIIA and VIIIB, July 2010.

LIMITATION OF LIABILITIES

Alpha Analytical performs services with reasonable care and diligence normal to the analytical testing laboratory industry. In the event of an error, the sole and exclusive responsibility of Alpha Analytical shall be to re-perform the work at it's own expense. In no event shall Alpha Analytical be held liable for any incidental, consequential or special damages, including but not limited to, damages in any way connected with the use of, interpretation of, information or analysis provided by Alpha Analytical.

We strongly urge our clients to comply with EPA protocol regarding sample volume, preservation, cooling, containers, sampling procedures, holding time and splitting of samples in the field.

Certification Information

Last revised December 11, 2013

The following analytes are not included in our NELAP Scope of Accreditation:

Westborough Facility
EPA 524.2: Acetone, 2-Butanone (Methyl ethyl ketone (MEK)), Tert-butyl alcohol, 2-Hexanone, Tetrahydrofuran, 1,3,5-Trichlorobenzene, 4-Methyl-2-pentanone (MIBK), Carbon disulfide, Diethyl ether.
EPA 8260C: 1,2,4,5-Tetramethylbenzene, 4-Ethyltoluene, Iodomethane (methyl iodide), Methyl methacrylate, Azobenzene.
EPA 8330A/B: PETN, Picric Acid, Nitroglycerine, 2,6-DANT, 2,4-DANT.
EPA 8270D: 1-Methylnaphthalene, Dimethylnaphthalene,1,4-Diphenylhydrazine.
EPA 625: 4-Chloroaniline, 4-Methylphenol.
SM4500: Soil: Total Phosphorus, TKN, NO2, NO3.
EPA 9071: Total Petroleum Hydrocarbons, Oil & Grease.

Mansfield Facility
EPA 8270D: Biphenyl.
EPA TO-15: Halothane, 2,4,4-Trimethyl-2-pentene, 2,4,4-Trimethyl-1-pentene, Thiophene, 2-Methylthiophene, 3-Methylthiophene, 2-Ethylthiophene, 1,2,3-Trimethylbenzene, Indan, Indene, 1,2,4,5-Tetramethylbenzene, Benzothiophene, 1-Methylnaphthalene.

The following analytes are included in our Massachusetts DEP Scope of Accreditation, Westborough Facility:

Drinking Water
EPA 200.8: Sb,As,Ba,Be,Cd,Cr,Cu,Pb,Ni,Se,Tl; **EPA 200.7**: Ba,Be,Ca,Cd,Cr,Cu,Na; **EPA 245.1:** Mercury;
EPA 300.0: Nitrate-N, Fluoride, Sulfate; **EPA 353.2**: Nitrate-N, Nitrite-N; **SM4500NO3-F**: Nitrate-N, Nitrite-N; **SM4500F-C, SM4500CN-CE, EPA 180.1, SM2130B, SM4500Cl-D, SM2320B, SM2540C, SM4500H-B**
EPA 332: Perchlorate.
Microbiology: **SM9215B; SM9223-P/A, SM9223B-Colilert-QT, Enterolert-QT.**

Non-Potable Water
EPA 200.8: Al,Sb,As,Be,Cd,Cr,Cu,Pb,Mn,Ni,Se,Ag,Tl,Zn;
EPA 200.7: Al,Sb,As,Be,Cd,Ca,Cr,Co,Cu,Fe,Pb,Mg,Mn,Mo,Ni,K,Se,Ag,Na,Sr,Ti,Tl,V,Zn;
EPA 245.1, SM4500H,B, EPA 120.1, SM2510B, SM2540C, SM2340B, SM2320B, SM4500CL-E, SM4500F-BC, SM426C, SM4500NH3-BH, **EPA 350.1**: Ammonia-N, **LACHAT 10-107-06-1-B**: Ammonia-N, **SM4500NO3-F,**
EPA 353.2: Nitrate-N**, SM4500NH3-BC-NES, EPA 351.1, SM4500P-E, SM4500P-B, E, SM5220D, EPA 410.4, SM5210B, SM5310C, SM4500CL-D, EPA 1664, SM14 510AC, EPA 420.1, SM4500-CN-CE, SM2540D.**
EPA 624: Volatile Halocarbons & Aromatics,
EPA 608: Chlordane, Toxaphene, Aldrin, alpha-BHC, beta-BHC, gamma-BHC, delta-BHC, Dieldrin, DDD, DDE, DDT, Endosulfan I, Endosulfan II, Endosulfan sulfate, Endrin, Endrin Aldehyde, Heptachlor, Heptachlor Epoxide, PCBs
EPA 625: SVOC (Acid/Base/Neutral Extractables), **EPA 600/4-81-045**: PCB-Oil.
Microbiology: **SM9223B-Colilert-QT; Enterolert-QT, SM9222D-MF**.

For a complete listing of analytes and methods, please contact your Alpha Project Manager.

Serial_No:01311410:48

CHAIN OF CUSTODY

PAGE 1 OF 1

Date Rec'd in Lab: 1/16/14

ALPHA Job #: ~~L1401583~~ L1402100 (BB) 1/29/14

8 Walkup Drive, Westboro, MA 01581, Tel: 508-898-9220
320 Forbes Blvd, Mansfield, MA 02048, Tel: 508-822-9300

Project Information

Project Name: NBHS IRA PSWS
Project Location: New Bedford, MA
Project #: 115058
Project Manager: David Sullivan
ALPHA Quote #:

Report Information - Data Deliverables

☐ ADEx ☑ EMAIL

Billing Information

☐ Same as Client info PO #: CNT5058

Client Information

Client: TRC
Address: 650 Suffolk street, Lowell, MA 01854
Phone: 978-970-5600
Email: aleonard@TRCsolutions.com, dsullivan@

Regulatory Requirements & Project Information Requirements

☐ Yes ☐ No MA MCP Analytical Methods ☐ Yes ☐ No CT RCP Analytical Methods
☐ Yes ☐ No Matrix Spike Required on this SDG? (Required for MCP Inorganics)
☐ Yes ☐ No GW1 Standards (Info Required for Metals & EPH with Targets)
☐ Yes ☐ No NPDES RGP
☐ Other State /Fed Program MA Criteria MCP

Turn-Around Time

☑ Standard ☐ RUSH (only confirmed if pre-approved)

Date Due: ~~1/30/14~~ 1/31/14

Additional Project Information:

*PCB+TPH to be filtered by lab using 0.2 um filter

TPH detection limit to be < 200 ppb

ALPHA Lab ID (Lab Use Only)	Sample ID	Collection Date	Collection Time	Sample Matrix	Sampler Initials	~~524.2~~	SVOC: ☐ ABN ☐ PAH	METALS: ☐ MCP 13 ☐ MCP 14 ☐ RCP 15	METALS: ☐ RCRA5 ☐ RCRA8 ☐ PP13	EPH: ☐ Ranges & Targets ☐ Ranges Only	VPH: ☐ Ranges & Targets ☐ Ranges Only	~~EPH~~ ☐ REST	~~TPH~~ ☐ Fingerprint	PCB (0.2 um Filtered)*	~~BTEX~~	Sample Comments	TOTAL # BOTTLES
(BB) ~~01583.01~~	Influent	1/16/14	12:30	I	SB	X					X	X	X	X			11
02100.02	Effluent	1/16/14	12:50	E	SB	X					X						5
03 (BB)	Trip Blank					X											

Container Type	V						A	A	A	A		
Preservative	B						A	A	A	A		

SAMPLE INFO
Filtration
☐ Field
☐ Lab to do
Preservation
☐ Lab to do

Container Type
P= Plastic
A= Amber glass
V= Vial
G= Glass
B= Bacteria cup
C= Cube
O= Other
E= Encore
D= BOD Bottle

Preservative
A= None
B= HCl
C= HNO_3
D= H_2SO_4
E= NaOH
F= MeOH
G= $NaHSO_4$
H = $Na_2S_2O_3$
I= Ascorbic Acid
J = NH_4Cl
K= Zn Acetate
O= Other

Relinquished By:	Date/Time	Received By:	Date/Time
Stephen Pike	1/16/14 1640	MCM	1/16/14 1640
MCM	1/16/14 1735	Richard Scott	1/16/14 1735

All samples submitted are subject to Alpha's Terms and Conditions. See reverse side.

FORM NO: 01-01 (rev. 12-Mar-2012)

ANALYTICAL REPORT

Lab Number:	L1403530
Client:	TRC Environmental Consultants Wannalancit Mills 650 Suffolk Street Lowell, MA 01854
ATTN:	David Sullivan
Phone:	(978) 656-3565
Project Name:	NBHS IRA PSWS
Project Number:	115058
Report Date:	02/25/14

The original project report/data package is held by Alpha Analytical. This report/data package is paginated and should be reproduced only in its entirety. Alpha Analytical holds no responsibility for results and/or data that are not consistent with the original.

Certifications & Approvals: MA (M-MA086), NY (11148), CT (PH-0574), NH (2003), NJ NELAP (MA935), RI (LAO00065), ME (MA00086), PA (68-03671), USDA (Permit #P-330-11-00240), NC (666), TX (T104704476), DOD (L2217), US Army Corps of Engineers.

Eight Walkup Drive, Westborough, MA 01581-1019
508-898-9220 (Fax) 508-898-9193 800-624-9220 - www.alphalab.com

Project Name: NBHS IRA PSWS
Project Number: 115058

Lab Number: L1403530
Report Date: 02/25/14

Alpha Sample ID	Client ID	Sample Location	Collection Date/Time
L1403530-01	INFLUENT	NEW BEDFORD, MA	02/14/14 08:00
L1403530-02	INFLUENT (LAB FILTERED 0.2)	NEW BEDFORD, MA	02/14/14 08:00
L1403530-03	EFFLUENT	NEW BEDFORD, MA	02/14/14 08:10
L1403530-04	MW-27R	NEW BEDFORD, MA	02/14/14 09:55
L1403530-05	MW-27R (LAB FILTERED 0.2)	NEW BEDFORD, MA	02/14/14 09:55
L1403530-06	MW-27R (FIELD FILTERED 0.45)	NEW BEDFORD, MA	02/14/14 09:55
L1403530-07	MW-42R	NEW BEDFORD, MA	02/14/14 10:50
L1403530-08	MW-42R (LAB FILTERED 0.2)	NEW BEDFORD, MA	02/14/14 10:50
L1403530-09	MW-42R (FIELD FILTERED 0.45)	NEW BEDFORD, MA	02/14/14 10:50
L1403530-10	TRIP BLANK	NEW BEDFORD, MA	02/14/14 00:00

Project Name: NBHS IRA PSWS **Lab Number:** L1403530

Project Number: 115058 **Report Date:** 02/25/14

MADEP MCP Response Action Analytical Report Certification

This form provides certifications for all samples performed by MCP methods. Please refer to the Sample Results and Container Information sections of this report for specification of MCP methods used for each analysis. The following questions pertain only to MCP Analytical Methods.

An affirmative response to questions A through F is required for "Presumptive Certainty" status		
A	Were all samples received in a condition consistent with those described on the Chain-of-Custody, properly preserved (including temperature) in the field or laboratory, and prepared/analyzed within method holding times?	YES
B	Were the analytical method(s) and all associated QC requirements specified in the selected CAM protocol(s) followed?	YES
C	Were all required corrective actions and analytical response actions specified in the selected CAM protocol(s) implemented for all identified performance standard non-conformances?	YES
D	Does the laboratory report comply with all the reporting requirements specified in CAM VII A, "Quality Assurance and Quality Control Guidelines for the Acquisition and Reporting of Analytical Data?"	YES
E a.	VPH, EPH, and APH Methods only: Was each method conducted without significant modification(s)? (Refer to the individual method(s) for a list of significant modifications).	N/A
E b.	APH and TO-15 Methods only: Was the complete analyte list reported for each method?	N/A
F	Were all applicable CAM protocol QC and performance standard non-conformances identified and evaluated in a laboratory narrative (including all "No" responses to Questions A through E)?	YES

A response to questions G, H and I is required for "Presumptive Certainty" status		
G	Were the reporting limits at or below all CAM reporting limits specified in the selected CAM protocol(s)?	NO
H	Were all QC performance standards specified in the CAM protocol(s) achieved?	NO
I	Were results reported for the complete analyte list specified in the selected CAM protocol(s)?	YES

For any questions answered "No", please refer to the case narrative section on the following page(s).

Please note that sample matrix information is located in the Sample Results section of this report.

Project Name: NBHS IRA PSWS **Lab Number:** L1403530
Project Number: 115058 **Report Date:** 02/25/14

Case Narrative

The samples were received in accordance with the Chain of Custody and no significant deviations were encountered during the preparation or analysis unless otherwise noted. Sample Receipt, Container Information, and the Chain of Custody are located at the back of the report.

Results contained within this report relate only to the samples submitted under this Alpha Lab Number and meet all of the requirements of NELAC, for all NELAC accredited parameters. The data presented in this report is organized by parameter (i.e. VOC, SVOC, etc.). Sample specific Quality Control data (i.e. Surrogate Spike Recovery) is reported at the end of the target analyte list for each individual sample, followed by the Laboratory Batch Quality Control at the end of each parameter. If a sample was re-analyzed or re-extracted due to a required quality control corrective action and if both sets of data are reported, the Laboratory ID of the re-analysis or re-extraction is designated with an "R" or "RE", respectively. When multiple Batch Quality Control elements are reported (e.g. more than one LCS), the associated samples for each element are noted in the grey shaded header line of each data table. Any Laboratory Batch, Sample Specific % recovery or RPD value that is outside the listed Acceptance Criteria is bolded in the report. Performance criteria for CAM and RCP methods allow for some LCS compound failures to occur and still be within method compliance. In these instances, the specific failures are not narrated but are noted in the associated QC table. This information is also incorporated in the Data Usability format for our Data Merger tool where it can be reviewed along with any associated usability implications. Soil/sediments, solids and tissues are reported on a dry weight basis unless otherwise noted. Definitions of all data qualifiers and acronyms used in this report are provided in the Glossary located at the back of the report.

In reference to questions H (CAM) or 4 (RCP) when "NO" is checked, the performance criteria for CAM and RCP methods allow for some quality control failures to occur and still be within method compliance. In these instances the specific failure is not narrated but noted in the associated QC table. The information is also incorporated in the Data Usability format of our Data Merger tool where it can be reviewed along with any associated usability implications.

Please see the associated ADEx data file for a comparison of laboratory reporting limits that were achieved with the regulatory Numerical Standards requested on the Chain of Custody.

HOLD POLICY
For samples submitted on hold, Alpha's policy is to hold samples (with the exception of Air canisters) free of charge for 21 calendar days from the date the project is completed. After 21 calendar days, we will dispose of all samples submitted including those put on hold unless you have contacted your Client Service Representative and made arrangements for Alpha to continue to hold the samples. Air canisters will be disposed after 3 business days from the date the project is completed.

Please contact Client Services at 800-624-9220 with any questions.

Project Name:	NBHS IRA PSWS	**Lab Number:**	L1403530
Project Number:	115058	**Report Date:**	02/25/14

Case Narrative (continued)

MCP Related Narratives

Volatile Organics

L1403530-03 has elevated detection limits due to the dilution required by the elevated concentrations of target compounds in the sample.

L1403530-03 was re-analyzed on dilution in order to quantify the sample within the calibration range. The results should be considered estimated, and are qualified with an E flag, for any compounds that exceeded the calibration range in the initial analysis. The re-analysis was performed only for the compound that exceeded the calibration range.

In reference to question G:

L1403530-03: Methylene chloride, trichlorofluoromethane, 1,1-dichloropropene, bromoform, chloromethane, bromomethane, chloroethane, methyl tert butyl ether, p/m-xylene, dibromomethane, 1,2,3-trichloropropane, dichlorodifluoromethane, carbon disulfide, bromochloromethane, 2,2-dichloropropane, 1,2-dibromoethane, 1,3-dichloropropane, bromobenzene, n-butylbenzene, sec-butylbenzene, tert-butylbenzene, o-chlorotoluene, p-chlorotoluene, 1,2-dibromo-3-chloropropane, isopropylbenzene, p-isopropyltoluene, naphthalene, n-propylbenzene, 1,2,3-trichlorobenzene, 1,2,4-trichlorobenzene, 1,3,5-trimethylbenzene, 1,2,4-trimethylbenzene, ethyl ether, isopropyl ether, ethyl-tert-butyl-ether and tertiary-amyl methyl ether did not achieve the requested CAM reporting limits.

In reference to question H:

The initial calibration, associated with L1403530-01, -03, -04, -07 and -10, did not meet the method required minimum response factor on the lowest calibration standard for 1,4-dioxane (0.00396), as well as the average response factor for 1,4-dioxane. In addition a quadratic fit was utilized for acetone.

The continuing calibration standard, associated with L1403530-01, -03, -04, -07 and -10, is outside the acceptance criteria for several compounds; however, it is within overall method allowances. A copy of the continuing calibration standard is included as an addendum to this report.

PCBs

L1403530-01, -04 and -07 have elevated detection limits due to the dilutions required by the elevated concentrations of target compounds in the samples.

Project Name:	NBHS IRA PSWS	**Lab Number:**	L1403530
Project Number:	115058	**Report Date:**	02/25/14

Case Narrative (continued)

In reference to question G:

L1403530-01, -04 and -07: All target analytes, with the exception of Aroclor 1254, did not achieve the requested CAM reporting limits.

In reference to question H:

The surrogate recoveries for L1403530-01 are below the acceptance criteria (30-150%) for 2,4,5,6-tetrachloro-m-xylene (0%) and decachlorobiphenyl (0%) due to the dilution required to quantitate the sample. Re-extraction was not required; therefore, the results of the original analysis are reported.

I, the undersigned, attest under the pains and penalties of perjury that, to the best of my knowledge and belief and based upon my personal inquiry of those responsible for providing the information contained in this analytical report, such information is accurate and complete. This certificate of analysis is not complete unless this page accompanies any and all pages of this report.

Authorized Signature: Michelle M. Morris

Title: Technical Director/Representative

Date: 02/25/14

ORGANICS

VOLATILES

Project Name: NBHS IRA PSWS **Lab Number:** L1403530

Project Number: 115058 **Report Date:** 02/25/14

SAMPLE RESULTS

Lab ID:	L1403530-01	Date Collected:	02/14/14 08:00
Client ID:	INFLUENT	Date Received:	02/14/14
Sample Location:	NEW BEDFORD, MA	Field Prep:	Not Specified
Matrix:	Water		
Analytical Method:	97,8260C		
Analytical Date:	02/17/14 11:24		
Analyst:	MM		

Parameter	Result	Qualifier	Units	RL	MDL	Dilution Factor
MCP Volatile Organics - Westborough Lab						
Methylene chloride	ND		ug/l	2.0	--	1
1,1-Dichloroethane	ND		ug/l	1.0	--	1
Chloroform	ND		ug/l	1.0	--	1
Carbon tetrachloride	ND		ug/l	1.0	--	1
1,2-Dichloropropane	ND		ug/l	1.0	--	1
Dibromochloromethane	ND		ug/l	1.0	--	1
1,1,2-Trichloroethane	ND		ug/l	1.0	--	1
Tetrachloroethene	ND		ug/l	1.0	--	1
Chlorobenzene	ND		ug/l	1.0	--	1
Trichlorofluoromethane	ND		ug/l	2.0	--	1
1,2-Dichloroethane	ND		ug/l	1.0	--	1
1,1,1-Trichloroethane	ND		ug/l	1.0	--	1
Bromodichloromethane	ND		ug/l	1.0	--	1
trans-1,3-Dichloropropene	ND		ug/l	0.50	--	1
cis-1,3-Dichloropropene	ND		ug/l	0.50	--	1
1,1-Dichloropropene	ND		ug/l	2.0	--	1
Bromoform	ND		ug/l	2.0	--	1
1,1,2,2-Tetrachloroethane	ND		ug/l	1.0	--	1
Benzene	ND		ug/l	0.50	--	1
Toluene	1.6		ug/l	1.0	--	1
Ethylbenzene	ND		ug/l	1.0	--	1
Chloromethane	ND		ug/l	2.0	--	1
Bromomethane	ND		ug/l	2.0	--	1
Vinyl chloride	ND		ug/l	1.0	--	1
Chloroethane	ND		ug/l	2.0	--	1
1,1-Dichloroethene	ND		ug/l	1.0	--	1
trans-1,2-Dichloroethene	ND		ug/l	1.0	--	1
Trichloroethene	ND		ug/l	1.0	--	1
1,2-Dichlorobenzene	ND		ug/l	1.0	--	1
1,3-Dichlorobenzene	1.8		ug/l	1.0	--	1
1,4-Dichlorobenzene	6.6		ug/l	1.0	--	1

Project Name: NBHS IRA PSWS **Lab Number:** L1403530

Project Number: 115058 **Report Date:** 02/25/14

SAMPLE RESULTS

Lab ID: L1403530-01 Date Collected: 02/14/14 08:00

Client ID: INFLUENT Date Received: 02/14/14

Sample Location: NEW BEDFORD, MA Field Prep: Not Specified

Parameter	Result	Qualifier	Units	RL	MDL	Dilution Factor
MCP Volatile Organics - Westborough Lab						
Methyl tert butyl ether	ND		ug/l	2.0	--	1
p/m-Xylene	ND		ug/l	2.0	--	1
o-Xylene	ND		ug/l	1.0	--	1
cis-1,2-Dichloroethene	1.7		ug/l	1.0	--	1
Dibromomethane	ND		ug/l	2.0	--	1
1,2,3-Trichloropropane	ND		ug/l	2.0	--	1
Styrene	ND		ug/l	1.0	--	1
Dichlorodifluoromethane	ND		ug/l	2.0	--	1
Acetone	ND		ug/l	5.0	--	1
Carbon disulfide	ND		ug/l	2.0	--	1
2-Butanone	ND		ug/l	5.0	--	1
4-Methyl-2-pentanone	ND		ug/l	5.0	--	1
2-Hexanone	ND		ug/l	5.0	--	1
Bromochloromethane	ND		ug/l	2.0	--	1
Tetrahydrofuran	ND		ug/l	2.0	--	1
2,2-Dichloropropane	ND		ug/l	2.0	--	1
1,2-Dibromoethane	ND		ug/l	2.0	--	1
1,3-Dichloropropane	ND		ug/l	2.0	--	1
1,1,1,2-Tetrachloroethane	ND		ug/l	1.0	--	1
Bromobenzene	ND		ug/l	2.0	--	1
n-Butylbenzene	ND		ug/l	2.0	--	1
sec-Butylbenzene	ND		ug/l	2.0	--	1
tert-Butylbenzene	ND		ug/l	2.0	--	1
o-Chlorotoluene	ND		ug/l	2.0	--	1
p-Chlorotoluene	ND		ug/l	2.0	--	1
1,2-Dibromo-3-chloropropane	ND		ug/l	2.0	--	1
Hexachlorobutadiene	ND		ug/l	0.60	--	1
Isopropylbenzene	ND		ug/l	2.0	--	1
p-Isopropyltoluene	ND		ug/l	2.0	--	1
Naphthalene	ND		ug/l	2.0	--	1
n-Propylbenzene	ND		ug/l	2.0	--	1
1,2,3-Trichlorobenzene	ND		ug/l	2.0	--	1
1,2,4-Trichlorobenzene	5.0		ug/l	2.0	--	1
1,3,5-Trimethylbenzene	ND		ug/l	2.0	--	1
1,2,4-Trimethylbenzene	ND		ug/l	2.0	--	1
Ethyl ether	ND		ug/l	2.0	--	1
Isopropyl Ether	ND		ug/l	2.0	--	1
Ethyl-Tert-Butyl-Ether	ND		ug/l	2.0	--	1
Tertiary-Amyl Methyl Ether	ND		ug/l	2.0	--	1

Project Name: NBHS IRA PSWS **Lab Number:** L1403530

Project Number: 115058 **Report Date:** 02/25/14

SAMPLE RESULTS

Lab ID:	L1403530-01	Date Collected:	02/14/14 08:00
Client ID:	INFLUENT	Date Received:	02/14/14
Sample Location:	NEW BEDFORD, MA	Field Prep:	Not Specified

Parameter	Result	Qualifier	Units	RL	MDL	Dilution Factor
MCP Volatile Organics - Westborough Lab						
1,4-Dioxane	ND		ug/l	250	--	1

Surrogate	% Recovery	Qualifier	Acceptance Criteria
1,2-Dichloroethane-d4	103		70-130
Toluene-d8	91		70-130
4-Bromofluorobenzene	95		70-130
Dibromofluoromethane	122		70-130

Project Name: NBHS IRA PSWS **Lab Number:** L1403530

Project Number: 115058 **Report Date:** 02/25/14

SAMPLE RESULTS

Lab ID:	L1403530-03	D2	Date Collected:	02/14/14 08:10
Client ID:	EFFLUENT		Date Received:	02/14/14
Sample Location:	NEW BEDFORD, MA		Field Prep:	Not Specified
Matrix:	Water			
Analytical Method:	97,8260C			
Analytical Date:	02/18/14 13:54			
Analyst:	MM			

Parameter	Result	Qualifier	Units	RL	MDL	Dilution Factor
MCP Volatile Organics - Westborough Lab						
cis-1,2-Dichloroethene	250		ug/l	10	--	10

Surrogate	% Recovery	Qualifier	Acceptance Criteria
1,2-Dichloroethane-d4	104		70-130
Toluene-d8	91		70-130
4-Bromofluorobenzene	97		70-130
Dibromofluoromethane	122		70-130

Project Name: NBHS IRA PSWS **Lab Number:** L1403530

Project Number: 115058 **Report Date:** 02/25/14

SAMPLE RESULTS

Lab ID:	L1403530-03	D	Date Collected:	02/14/14 08:10
Client ID:	EFFLUENT		Date Received:	02/14/14
Sample Location:	NEW BEDFORD, MA		Field Prep:	Not Specified
Matrix:	Water			
Analytical Method:	97,8260C			
Analytical Date:	02/17/14 11:56			
Analyst:	MM			

Parameter	Result	Qualifier	Units	RL	MDL	Dilution Factor
MCP Volatile Organics - Westborough Lab						
Methylene chloride	ND		ug/l	4.0	--	2
1,1-Dichloroethane	ND		ug/l	2.0	--	2
Chloroform	ND		ug/l	2.0	--	2
Carbon tetrachloride	ND		ug/l	2.0	--	2
1,2-Dichloropropane	ND		ug/l	2.0	--	2
Dibromochloromethane	ND		ug/l	2.0	--	2
1,1,2-Trichloroethane	ND		ug/l	2.0	--	2
Tetrachloroethene	ND		ug/l	2.0	--	2
Chlorobenzene	ND		ug/l	2.0	--	2
Trichlorofluoromethane	ND		ug/l	4.0	--	2
1,2-Dichloroethane	ND		ug/l	2.0	--	2
1,1,1-Trichloroethane	ND		ug/l	2.0	--	2
Bromodichloromethane	ND		ug/l	2.0	--	2
trans-1,3-Dichloropropene	ND		ug/l	1.0	--	2
cis-1,3-Dichloropropene	ND		ug/l	1.0	--	2
1,1-Dichloropropene	ND		ug/l	4.0	--	2
Bromoform	ND		ug/l	4.0	--	2
1,1,2,2-Tetrachloroethane	ND		ug/l	2.0	--	2
Benzene	ND		ug/l	1.0	--	2
Toluene	ND		ug/l	2.0	--	2
Ethylbenzene	ND		ug/l	2.0	--	2
Chloromethane	ND		ug/l	4.0	--	2
Bromomethane	ND		ug/l	4.0	--	2
Vinyl chloride	ND		ug/l	2.0	--	2
Chloroethane	ND		ug/l	4.0	--	2
1,1-Dichloroethene	ND		ug/l	2.0	--	2
trans-1,2-Dichloroethene	26		ug/l	2.0	--	2
Trichloroethene	ND		ug/l	2.0	--	2
1,2-Dichlorobenzene	ND		ug/l	2.0	--	2
1,3-Dichlorobenzene	ND		ug/l	2.0	--	2
1,4-Dichlorobenzene	ND		ug/l	2.0	--	2

Project Name: NBHS IRA PSWS **Lab Number:** L1403530

Project Number: 115058 **Report Date:** 02/25/14

SAMPLE RESULTS

Lab ID: L1403530-03 D Date Collected: 02/14/14 08:10

Client ID: EFFLUENT Date Received: 02/14/14

Sample Location: NEW BEDFORD, MA Field Prep: Not Specified

Parameter	Result	Qualifier	Units	RL	MDL	Dilution Factor
MCP Volatile Organics - Westborough Lab						
Methyl tert butyl ether	ND		ug/l	4.0	--	2
p/m-Xylene	ND		ug/l	4.0	--	2
o-Xylene	ND		ug/l	2.0	--	2
cis-1,2-Dichloroethene	230	E	ug/l	2.0	--	2
Dibromomethane	ND		ug/l	4.0	--	2
1,2,3-Trichloropropane	ND		ug/l	4.0	--	2
Styrene	ND		ug/l	2.0	--	2
Dichlorodifluoromethane	ND		ug/l	4.0	--	2
Acetone	ND		ug/l	10	--	2
Carbon disulfide	ND		ug/l	4.0	--	2
2-Butanone	ND		ug/l	10	--	2
4-Methyl-2-pentanone	ND		ug/l	10	--	2
2-Hexanone	ND		ug/l	10	--	2
Bromochloromethane	ND		ug/l	4.0	--	2
Tetrahydrofuran	8.8		ug/l	4.0	--	2
2,2-Dichloropropane	ND		ug/l	4.0	--	2
1,2-Dibromoethane	ND		ug/l	4.0	--	2
1,3-Dichloropropane	ND		ug/l	4.0	--	2
1,1,1,2-Tetrachloroethane	ND		ug/l	2.0	--	2
Bromobenzene	ND		ug/l	4.0	--	2
n-Butylbenzene	ND		ug/l	4.0	--	2
sec-Butylbenzene	ND		ug/l	4.0	--	2
tert-Butylbenzene	ND		ug/l	4.0	--	2
o-Chlorotoluene	ND		ug/l	4.0	--	2
p-Chlorotoluene	ND		ug/l	4.0	--	2
1,2-Dibromo-3-chloropropane	ND		ug/l	4.0	--	2
Hexachlorobutadiene	ND		ug/l	1.2	--	2
Isopropylbenzene	ND		ug/l	4.0	--	2
p-Isopropyltoluene	ND		ug/l	4.0	--	2
Naphthalene	ND		ug/l	4.0	--	2
n-Propylbenzene	ND		ug/l	4.0	--	2
1,2,3-Trichlorobenzene	ND		ug/l	4.0	--	2
1,2,4-Trichlorobenzene	ND		ug/l	4.0	--	2
1,3,5-Trimethylbenzene	ND		ug/l	4.0	--	2
1,2,4-Trimethylbenzene	ND		ug/l	4.0	--	2
Ethyl ether	ND		ug/l	4.0	--	2
Isopropyl Ether	ND		ug/l	4.0	--	2
Ethyl-Tert-Butyl-Ether	ND		ug/l	4.0	--	2
Tertiary-Amyl Methyl Ether	ND		ug/l	4.0	--	2

Project Name: NBHS IRA PSWS **Lab Number:** L1403530

Project Number: 115058 **Report Date:** 02/25/14

SAMPLE RESULTS

Lab ID:	L1403530-03	D	Date Collected:	02/14/14 08:10
Client ID:	EFFLUENT		Date Received:	02/14/14
Sample Location:	NEW BEDFORD, MA		Field Prep:	Not Specified

Parameter	Result	Qualifier	Units	RL	MDL	Dilution Factor
MCP Volatile Organics - Westborough Lab						
1,4-Dioxane	ND		ug/l	500	--	2

Surrogate	% Recovery	Qualifier	Acceptance Criteria
1,2-Dichloroethane-d4	108		70-130
Toluene-d8	89		70-130
4-Bromofluorobenzene	94		70-130
Dibromofluoromethane	122		70-130

Project Name: NBHS IRA PSWS **Lab Number:** L1403530

Project Number: 115058 **Report Date:** 02/25/14

SAMPLE RESULTS

Lab ID:	L1403530-04	Date Collected:	02/14/14 09:55
Client ID:	MW-27R	Date Received:	02/14/14
Sample Location:	NEW BEDFORD, MA	Field Prep:	Not Specified
Matrix:	Water		
Analytical Method:	97,8260C		
Analytical Date:	02/17/14 12:29		
Analyst:	MM		

Parameter	Result	Qualifier	Units	RL	MDL	Dilution Factor
MCP Volatile Organics - Westborough Lab						
Methylene chloride	ND		ug/l	2.0	--	1
1,1-Dichloroethane	ND		ug/l	1.0	--	1
Chloroform	ND		ug/l	1.0	--	1
Carbon tetrachloride	ND		ug/l	1.0	--	1
1,2-Dichloropropane	ND		ug/l	1.0	--	1
Dibromochloromethane	ND		ug/l	1.0	--	1
1,1,2-Trichloroethane	ND		ug/l	1.0	--	1
Tetrachloroethene	ND		ug/l	1.0	--	1
Chlorobenzene	ND		ug/l	1.0	--	1
Trichlorofluoromethane	ND		ug/l	2.0	--	1
1,2-Dichloroethane	ND		ug/l	1.0	--	1
1,1,1-Trichloroethane	ND		ug/l	1.0	--	1
Bromodichloromethane	ND		ug/l	1.0	--	1
trans-1,3-Dichloropropene	ND		ug/l	0.50	--	1
cis-1,3-Dichloropropene	ND		ug/l	0.50	--	1
1,1-Dichloropropene	ND		ug/l	2.0	--	1
Bromoform	ND		ug/l	2.0	--	1
1,1,2,2-Tetrachloroethane	ND		ug/l	1.0	--	1
Benzene	ND		ug/l	0.50	--	1
Toluene	2.9		ug/l	1.0	--	1
Ethylbenzene	ND		ug/l	1.0	--	1
Chloromethane	ND		ug/l	2.0	--	1
Bromomethane	ND		ug/l	2.0	--	1
Vinyl chloride	ND		ug/l	1.0	--	1
Chloroethane	ND		ug/l	2.0	--	1
1,1-Dichloroethene	ND		ug/l	1.0	--	1
trans-1,2-Dichloroethene	ND		ug/l	1.0	--	1
Trichloroethene	1.2		ug/l	1.0	--	1
1,2-Dichlorobenzene	ND		ug/l	1.0	--	1
1,3-Dichlorobenzene	1.2		ug/l	1.0	--	1
1,4-Dichlorobenzene	4.8		ug/l	1.0	--	1

Project Name: NBHS IRA PSWS **Lab Number:** L1403530

Project Number: 115058 **Report Date:** 02/25/14

SAMPLE RESULTS

Lab ID: L1403530-04 Date Collected: 02/14/14 09:55

Client ID: MW-27R Date Received: 02/14/14

Sample Location: NEW BEDFORD, MA Field Prep: Not Specified

Parameter	Result	Qualifier	Units	RL	MDL	Dilution Factor
MCP Volatile Organics - Westborough Lab						
Methyl tert butyl ether	ND		ug/l	2.0	--	1
p/m-Xylene	ND		ug/l	2.0	--	1
o-Xylene	ND		ug/l	1.0	--	1
cis-1,2-Dichloroethene	1.8		ug/l	1.0	--	1
Dibromomethane	ND		ug/l	2.0	--	1
1,2,3-Trichloropropane	ND		ug/l	2.0	--	1
Styrene	ND		ug/l	1.0	--	1
Dichlorodifluoromethane	ND		ug/l	2.0	--	1
Acetone	ND		ug/l	5.0	--	1
Carbon disulfide	ND		ug/l	2.0	--	1
2-Butanone	ND		ug/l	5.0	--	1
4-Methyl-2-pentanone	ND		ug/l	5.0	--	1
2-Hexanone	ND		ug/l	5.0	--	1
Bromochloromethane	ND		ug/l	2.0	--	1
Tetrahydrofuran	ND		ug/l	2.0	--	1
2,2-Dichloropropane	ND		ug/l	2.0	--	1
1,2-Dibromoethane	ND		ug/l	2.0	--	1
1,3-Dichloropropane	ND		ug/l	2.0	--	1
1,1,1,2-Tetrachloroethane	ND		ug/l	1.0	--	1
Bromobenzene	ND		ug/l	2.0	--	1
n-Butylbenzene	ND		ug/l	2.0	--	1
sec-Butylbenzene	ND		ug/l	2.0	--	1
tert-Butylbenzene	ND		ug/l	2.0	--	1
o-Chlorotoluene	ND		ug/l	2.0	--	1
p-Chlorotoluene	ND		ug/l	2.0	--	1
1,2-Dibromo-3-chloropropane	ND		ug/l	2.0	--	1
Hexachlorobutadiene	ND		ug/l	0.60	--	1
Isopropylbenzene	ND		ug/l	2.0	--	1
p-Isopropyltoluene	ND		ug/l	2.0	--	1
Naphthalene	ND		ug/l	2.0	--	1
n-Propylbenzene	ND		ug/l	2.0	--	1
1,2,3-Trichlorobenzene	ND		ug/l	2.0	--	1
1,2,4-Trichlorobenzene	2.9		ug/l	2.0	--	1
1,3,5-Trimethylbenzene	ND		ug/l	2.0	--	1
1,2,4-Trimethylbenzene	ND		ug/l	2.0	--	1
Ethyl ether	ND		ug/l	2.0	--	1
Isopropyl Ether	ND		ug/l	2.0	--	1
Ethyl-Tert-Butyl-Ether	ND		ug/l	2.0	--	1
Tertiary-Amyl Methyl Ether	ND		ug/l	2.0	--	1

Project Name: NBHS IRA PSWS **Lab Number:** L1403530

Project Number: 115058 **Report Date:** 02/25/14

SAMPLE RESULTS

Lab ID:	L1403530-04	Date Collected:	02/14/14 09:55
Client ID:	MW-27R	Date Received:	02/14/14
Sample Location:	NEW BEDFORD, MA	Field Prep:	Not Specified

Parameter	Result	Qualifier	Units	RL	MDL	Dilution Factor
MCP Volatile Organics - Westborough Lab						
1,4-Dioxane	ND		ug/l	250	--	1

Surrogate	% Recovery	Qualifier	Acceptance Criteria
1,2-Dichloroethane-d4	102		70-130
Toluene-d8	91		70-130
4-Bromofluorobenzene	94		70-130
Dibromofluoromethane	116		70-130

Project Name: NBHS IRA PSWS **Lab Number:** L1403530

Project Number: 115058 **Report Date:** 02/25/14

SAMPLE RESULTS

Lab ID:	L1403530-07	Date Collected:	02/14/14 10:50
Client ID:	MW-42R	Date Received:	02/14/14
Sample Location:	NEW BEDFORD, MA	Field Prep:	Not Specified
Matrix:	Water		
Analytical Method:	97,8260C		
Analytical Date:	02/17/14 13:01		
Analyst:	MM		

Parameter	Result	Qualifier	Units	RL	MDL	Dilution Factor
MCP Volatile Organics - Westborough Lab						
Methylene chloride	ND		ug/l	2.0	--	1
1,1-Dichloroethane	ND		ug/l	1.0	--	1
Chloroform	ND		ug/l	1.0	--	1
Carbon tetrachloride	ND		ug/l	1.0	--	1
1,2-Dichloropropane	ND		ug/l	1.0	--	1
Dibromochloromethane	ND		ug/l	1.0	--	1
1,1,2-Trichloroethane	ND		ug/l	1.0	--	1
Tetrachloroethene	ND		ug/l	1.0	--	1
Chlorobenzene	ND		ug/l	1.0	--	1
Trichlorofluoromethane	ND		ug/l	2.0	--	1
1,2-Dichloroethane	ND		ug/l	1.0	--	1
1,1,1-Trichloroethane	ND		ug/l	1.0	--	1
Bromodichloromethane	ND		ug/l	1.0	--	1
trans-1,3-Dichloropropene	ND		ug/l	0.50	--	1
cis-1,3-Dichloropropene	ND		ug/l	0.50	--	1
1,1-Dichloropropene	ND		ug/l	2.0	--	1
Bromoform	ND		ug/l	2.0	--	1
1,1,2,2-Tetrachloroethane	ND		ug/l	1.0	--	1
Benzene	ND		ug/l	0.50	--	1
Toluene	ND		ug/l	1.0	--	1
Ethylbenzene	ND		ug/l	1.0	--	1
Chloromethane	ND		ug/l	2.0	--	1
Bromomethane	ND		ug/l	2.0	--	1
Vinyl chloride	8.2		ug/l	1.0	--	1
Chloroethane	ND		ug/l	2.0	--	1
1,1-Dichloroethene	ND		ug/l	1.0	--	1
trans-1,2-Dichloroethene	2.9		ug/l	1.0	--	1
Trichloroethene	14		ug/l	1.0	--	1
1,2-Dichlorobenzene	ND		ug/l	1.0	--	1
1,3-Dichlorobenzene	ND		ug/l	1.0	--	1
1,4-Dichlorobenzene	ND		ug/l	1.0	--	1

Project Name: NBHS IRA PSWS **Lab Number:** L1403530

Project Number: 115058 **Report Date:** 02/25/14

SAMPLE RESULTS

Lab ID: L1403530-07 Date Collected: 02/14/14 10:50

Client ID: MW-42R Date Received: 02/14/14

Sample Location: NEW BEDFORD, MA Field Prep: Not Specified

Parameter	Result	Qualifier	Units	RL	MDL	Dilution Factor
MCP Volatile Organics - Westborough Lab						
Methyl tert butyl ether	ND		ug/l	2.0	--	1
p/m-Xylene	ND		ug/l	2.0	--	1
o-Xylene	ND		ug/l	1.0	--	1
cis-1,2-Dichloroethene	5.6		ug/l	1.0	--	1
Dibromomethane	ND		ug/l	2.0	--	1
1,2,3-Trichloropropane	ND		ug/l	2.0	--	1
Styrene	ND		ug/l	1.0	--	1
Dichlorodifluoromethane	ND		ug/l	2.0	--	1
Acetone	ND		ug/l	5.0	--	1
Carbon disulfide	ND		ug/l	2.0	--	1
2-Butanone	ND		ug/l	5.0	--	1
4-Methyl-2-pentanone	ND		ug/l	5.0	--	1
2-Hexanone	ND		ug/l	5.0	--	1
Bromochloromethane	ND		ug/l	2.0	--	1
Tetrahydrofuran	ND		ug/l	2.0	--	1
2,2-Dichloropropane	ND		ug/l	2.0	--	1
1,2-Dibromoethane	ND		ug/l	2.0	--	1
1,3-Dichloropropane	ND		ug/l	2.0	--	1
1,1,1,2-Tetrachloroethane	ND		ug/l	1.0	--	1
Bromobenzene	ND		ug/l	2.0	--	1
n-Butylbenzene	ND		ug/l	2.0	--	1
sec-Butylbenzene	ND		ug/l	2.0	--	1
tert-Butylbenzene	ND		ug/l	2.0	--	1
o-Chlorotoluene	ND		ug/l	2.0	--	1
p-Chlorotoluene	ND		ug/l	2.0	--	1
1,2-Dibromo-3-chloropropane	ND		ug/l	2.0	--	1
Hexachlorobutadiene	ND		ug/l	0.60	--	1
Isopropylbenzene	ND		ug/l	2.0	--	1
p-Isopropyltoluene	ND		ug/l	2.0	--	1
Naphthalene	ND		ug/l	2.0	--	1
n-Propylbenzene	ND		ug/l	2.0	--	1
1,2,3-Trichlorobenzene	ND		ug/l	2.0	--	1
1,2,4-Trichlorobenzene	ND		ug/l	2.0	--	1
1,3,5-Trimethylbenzene	ND		ug/l	2.0	--	1
1,2,4-Trimethylbenzene	ND		ug/l	2.0	--	1
Ethyl ether	ND		ug/l	2.0	--	1
Isopropyl Ether	ND		ug/l	2.0	--	1
Ethyl-Tert-Butyl-Ether	ND		ug/l	2.0	--	1
Tertiary-Amyl Methyl Ether	ND		ug/l	2.0	--	1

Project Name: NBHS IRA PSWS **Lab Number:** L1403530

Project Number: 115058 **Report Date:** 02/25/14

SAMPLE RESULTS

Lab ID:	L1403530-07	Date Collected:	02/14/14 10:50
Client ID:	MW-42R	Date Received:	02/14/14
Sample Location:	NEW BEDFORD, MA	Field Prep:	Not Specified

Parameter	Result	Qualifier	Units	RL	MDL	Dilution Factor
MCP Volatile Organics - Westborough Lab						
1,4-Dioxane	ND		ug/l	250	--	1

Surrogate	% Recovery	Qualifier	Acceptance Criteria
1,2-Dichloroethane-d4	107		70-130
Toluene-d8	92		70-130
4-Bromofluorobenzene	96		70-130
Dibromofluoromethane	119		70-130

Project Name: NBHS IRA PSWS **Lab Number:** L1403530

Project Number: 115058 **Report Date:** 02/25/14

SAMPLE RESULTS

Lab ID:	L1403530-10	Date Collected:	02/14/14 00:00
Client ID:	TRIP BLANK	Date Received:	02/14/14
Sample Location:	NEW BEDFORD, MA	Field Prep:	Not Specified
Matrix:	Water		
Analytical Method:	97,8260C		
Analytical Date:	02/17/14 08:09		
Analyst:	MM		

Parameter	Result	Qualifier	Units	RL	MDL	Dilution Factor
MCP Volatile Organics - Westborough Lab						
Methylene chloride	ND		ug/l	2.0	--	1
1,1-Dichloroethane	ND		ug/l	1.0	--	1
Chloroform	ND		ug/l	1.0	--	1
Carbon tetrachloride	ND		ug/l	1.0	--	1
1,2-Dichloropropane	ND		ug/l	1.0	--	1
Dibromochloromethane	ND		ug/l	1.0	--	1
1,1,2-Trichloroethane	ND		ug/l	1.0	--	1
Tetrachloroethene	ND		ug/l	1.0	--	1
Chlorobenzene	ND		ug/l	1.0	--	1
Trichlorofluoromethane	ND		ug/l	2.0	--	1
1,2-Dichloroethane	ND		ug/l	1.0	--	1
1,1,1-Trichloroethane	ND		ug/l	1.0	--	1
Bromodichloromethane	ND		ug/l	1.0	--	1
trans-1,3-Dichloropropene	ND		ug/l	0.50	--	1
cis-1,3-Dichloropropene	ND		ug/l	0.50	--	1
1,1-Dichloropropene	ND		ug/l	2.0	--	1
Bromoform	ND		ug/l	2.0	--	1
1,1,2,2-Tetrachloroethane	ND		ug/l	1.0	--	1
Benzene	ND		ug/l	0.50	--	1
Toluene	ND		ug/l	1.0	--	1
Ethylbenzene	ND		ug/l	1.0	--	1
Chloromethane	ND		ug/l	2.0	--	1
Bromomethane	ND		ug/l	2.0	--	1
Vinyl chloride	ND		ug/l	1.0	--	1
Chloroethane	ND		ug/l	2.0	--	1
1,1-Dichloroethene	ND		ug/l	1.0	--	1
trans-1,2-Dichloroethene	ND		ug/l	1.0	--	1
Trichloroethene	ND		ug/l	1.0	--	1
1,2-Dichlorobenzene	ND		ug/l	1.0	--	1
1,3-Dichlorobenzene	ND		ug/l	1.0	--	1
1,4-Dichlorobenzene	ND		ug/l	1.0	--	1

Project Name: NBHS IRA PSWS **Lab Number:** L1403530

Project Number: 115058 **Report Date:** 02/25/14

SAMPLE RESULTS

Lab ID: L1403530-10 Date Collected: 02/14/14 00:00

Client ID: TRIP BLANK Date Received: 02/14/14

Sample Location: NEW BEDFORD, MA Field Prep: Not Specified

Parameter	Result	Qualifier	Units	RL	MDL	Dilution Factor
MCP Volatile Organics - Westborough Lab						
Methyl tert butyl ether	ND		ug/l	2.0	--	1
p/m-Xylene	ND		ug/l	2.0	--	1
o-Xylene	ND		ug/l	1.0	--	1
cis-1,2-Dichloroethene	ND		ug/l	1.0	--	1
Dibromomethane	ND		ug/l	2.0	--	1
1,2,3-Trichloropropane	ND		ug/l	2.0	--	1
Styrene	ND		ug/l	1.0	--	1
Dichlorodifluoromethane	ND		ug/l	2.0	--	1
Acetone	ND		ug/l	5.0	--	1
Carbon disulfide	ND		ug/l	2.0	--	1
2-Butanone	ND		ug/l	5.0	--	1
4-Methyl-2-pentanone	ND		ug/l	5.0	--	1
2-Hexanone	ND		ug/l	5.0	--	1
Bromochloromethane	ND		ug/l	2.0	--	1
Tetrahydrofuran	ND		ug/l	2.0	--	1
2,2-Dichloropropane	ND		ug/l	2.0	--	1
1,2-Dibromoethane	ND		ug/l	2.0	--	1
1,3-Dichloropropane	ND		ug/l	2.0	--	1
1,1,1,2-Tetrachloroethane	ND		ug/l	1.0	--	1
Bromobenzene	ND		ug/l	2.0	--	1
n-Butylbenzene	ND		ug/l	2.0	--	1
sec-Butylbenzene	ND		ug/l	2.0	--	1
tert-Butylbenzene	ND		ug/l	2.0	--	1
o-Chlorotoluene	ND		ug/l	2.0	--	1
p-Chlorotoluene	ND		ug/l	2.0	--	1
1,2-Dibromo-3-chloropropane	ND		ug/l	2.0	--	1
Hexachlorobutadiene	ND		ug/l	0.60	--	1
Isopropylbenzene	ND		ug/l	2.0	--	1
p-Isopropyltoluene	ND		ug/l	2.0	--	1
Naphthalene	ND		ug/l	2.0	--	1
n-Propylbenzene	ND		ug/l	2.0	--	1
1,2,3-Trichlorobenzene	ND		ug/l	2.0	--	1
1,2,4-Trichlorobenzene	ND		ug/l	2.0	--	1
1,3,5-Trimethylbenzene	ND		ug/l	2.0	--	1
1,2,4-Trimethylbenzene	ND		ug/l	2.0	--	1
Ethyl ether	ND		ug/l	2.0	--	1
Isopropyl Ether	ND		ug/l	2.0	--	1
Ethyl-Tert-Butyl-Ether	ND		ug/l	2.0	--	1
Tertiary-Amyl Methyl Ether	ND		ug/l	2.0	--	1

Project Name: NBHS IRA PSWS **Lab Number:** L1403530

Project Number: 115058 **Report Date:** 02/25/14

SAMPLE RESULTS

Lab ID:	L1403530-10	Date Collected:	02/14/14 00:00
Client ID:	TRIP BLANK	Date Received:	02/14/14
Sample Location:	NEW BEDFORD, MA	Field Prep:	Not Specified

Parameter	Result	Qualifier	Units	RL	MDL	Dilution Factor
MCP Volatile Organics - Westborough Lab						
1,4-Dioxane	ND		ug/l	250	--	1

Surrogate	% Recovery	Qualifier	Acceptance Criteria
1,2-Dichloroethane-d4	104		70-130
Toluene-d8	90		70-130
4-Bromofluorobenzene	95		70-130
Dibromofluoromethane	121		70-130

Project Name: NBHS IRA PSWS **Lab Number:** L1403530

Project Number: 115058 **Report Date:** 02/25/14

Method Blank Analysis
Batch Quality Control

Analytical Method: 97,8260C
Analytical Date: 02/17/14 07:04
Analyst: MM

Parameter	Result	Qualifier	Units	RL	MDL
MCP Volatile Organics - Westborough Lab for sample(s): 01,03-04,07,10 Batch: WG670768-3					
Methylene chloride	ND		ug/l	2.0	--
1,1-Dichloroethane	ND		ug/l	1.0	--
Chloroform	ND		ug/l	1.0	--
Carbon tetrachloride	ND		ug/l	1.0	--
1,2-Dichloropropane	ND		ug/l	1.0	--
Dibromochloromethane	ND		ug/l	1.0	--
1,1,2-Trichloroethane	ND		ug/l	1.0	--
Tetrachloroethene	ND		ug/l	1.0	--
Chlorobenzene	ND		ug/l	1.0	--
Trichlorofluoromethane	ND		ug/l	2.0	--
1,2-Dichloroethane	ND		ug/l	1.0	--
1,1,1-Trichloroethane	ND		ug/l	1.0	--
Bromodichloromethane	ND		ug/l	1.0	--
trans-1,3-Dichloropropene	ND		ug/l	0.50	--
cis-1,3-Dichloropropene	ND		ug/l	0.50	--
1,1-Dichloropropene	ND		ug/l	2.0	--
Bromoform	ND		ug/l	2.0	--
1,1,2,2-Tetrachloroethane	ND		ug/l	1.0	--
Benzene	ND		ug/l	0.50	--
Toluene	ND		ug/l	1.0	--
Ethylbenzene	ND		ug/l	1.0	--
Chloromethane	ND		ug/l	2.0	--
Bromomethane	ND		ug/l	2.0	--
Vinyl chloride	ND		ug/l	1.0	--
Chloroethane	ND		ug/l	2.0	--
1,1-Dichloroethene	ND		ug/l	1.0	--
trans-1,2-Dichloroethene	ND		ug/l	1.0	--
Trichloroethene	ND		ug/l	1.0	--
1,2-Dichlorobenzene	ND		ug/l	1.0	--
1,3-Dichlorobenzene	ND		ug/l	1.0	--
1,4-Dichlorobenzene	ND		ug/l	1.0	--

Project Name: NBHS IRA PSWS **Lab Number:** L1403530

Project Number: 115058 **Report Date:** 02/25/14

Method Blank Analysis
Batch Quality Control

Analytical Method: 97,8260C
Analytical Date: 02/17/14 07:04
Analyst: MM

Parameter	Result	Qualifier	Units	RL	MDL
MCP Volatile Organics - Westborough Lab for sample(s): 01,03-04,07,10 Batch: WG670768-3					
Methyl tert butyl ether	ND		ug/l	2.0	--
p/m-Xylene	ND		ug/l	2.0	--
o-Xylene	ND		ug/l	1.0	--
cis-1,2-Dichloroethene	ND		ug/l	1.0	--
Dibromomethane	ND		ug/l	2.0	--
1,2,3-Trichloropropane	ND		ug/l	2.0	--
Styrene	ND		ug/l	1.0	--
Dichlorodifluoromethane	ND		ug/l	2.0	--
Acetone	ND		ug/l	5.0	--
Carbon disulfide	ND		ug/l	2.0	--
2-Butanone	ND		ug/l	5.0	--
4-Methyl-2-pentanone	ND		ug/l	5.0	--
2-Hexanone	ND		ug/l	5.0	--
Bromochloromethane	ND		ug/l	2.0	--
Tetrahydrofuran	ND		ug/l	2.0	--
2,2-Dichloropropane	ND		ug/l	2.0	--
1,2-Dibromoethane	ND		ug/l	2.0	--
1,3-Dichloropropane	ND		ug/l	2.0	--
1,1,1,2-Tetrachloroethane	ND		ug/l	1.0	--
Bromobenzene	ND		ug/l	2.0	--
n-Butylbenzene	ND		ug/l	2.0	--
sec-Butylbenzene	ND		ug/l	2.0	--
tert-Butylbenzene	ND		ug/l	2.0	--
o-Chlorotoluene	ND		ug/l	2.0	--
p-Chlorotoluene	ND		ug/l	2.0	--
1,2-Dibromo-3-chloropropane	ND		ug/l	2.0	--
Hexachlorobutadiene	ND		ug/l	0.60	--
Isopropylbenzene	ND		ug/l	2.0	--
p-Isopropyltoluene	ND		ug/l	2.0	--
Naphthalene	ND		ug/l	2.0	--
n-Propylbenzene	ND		ug/l	2.0	--

Project Name: NBHS IRA PSWS
Project Number: 115058

Lab Number: L1403530
Report Date: 02/25/14

Method Blank Analysis
Batch Quality Control

Analytical Method: 97,8260C
Analytical Date: 02/17/14 07:04
Analyst: MM

Parameter	Result	Qualifier	Units	RL	MDL
MCP Volatile Organics - Westborough Lab for sample(s): 01,03-04,07,10 Batch: WG670768-3					
1,2,3-Trichlorobenzene	ND		ug/l	2.0	--
1,2,4-Trichlorobenzene	ND		ug/l	2.0	--
1,3,5-Trimethylbenzene	ND		ug/l	2.0	--
1,2,4-Trimethylbenzene	ND		ug/l	2.0	--
Ethyl ether	ND		ug/l	2.0	--
Isopropyl Ether	ND		ug/l	2.0	--
Ethyl-Tert-Butyl-Ether	ND		ug/l	2.0	--
Tertiary-Amyl Methyl Ether	ND		ug/l	2.0	--
1,4-Dioxane	ND		ug/l	250	--

Surrogate	%Recovery	Qualifier	Acceptance Criteria
1,2-Dichloroethane-d4	103		70-130
Toluene-d8	90		70-130
4-Bromofluorobenzene	96		70-130
Dibromofluoromethane	118		70-130

Project Name: NBHS IRA PSWS **Lab Number:** L1403530

Project Number: 115058 **Report Date:** 02/25/14

Method Blank Analysis
Batch Quality Control

Analytical Method: 97,8260C
Analytical Date: 02/18/14 08:28
Analyst: MM

Parameter	Result	Qualifier	Units	RL	MDL
MCP Volatile Organics - Westborough Lab for sample(s): 03 Batch: WG670768-6					
cis-1,2-Dichloroethene	ND		ug/l	1.0	--

Surrogate	%Recovery	Qualifier	Acceptance Criteria
1,2-Dichloroethane-d4	98		70-130
Toluene-d8	89		70-130
4-Bromofluorobenzene	97		70-130
Dibromofluoromethane	114		70-130

Lab Control Sample Analysis
Batch Quality Control

Project Name: NBHS IRA PSWS
Project Number: 115058

Lab Number: L1403530
Report Date: 02/25/14

Parameter	LCS %Recovery	Qual	LCSD %Recovery	Qual	%Recovery Limits	RPD	Qual	RPD Limits
MCP Volatile Organics - Westborough Lab Associated sample(s): 01,03-04,07,10 Batch: WG670768-1 WG670768-2								
Methylene chloride	104		102		70-130	2		20
1,1-Dichloroethane	101		101		70-130	0		20
Chloroform	107		109		70-130	2		20
Carbon tetrachloride	106		106		70-130	0		20
1,2-Dichloropropane	96		102		70-130	6		20
Dibromochloromethane	93		98		70-130	5		20
1,1,2-Trichloroethane	91		95		70-130	4		20
Tetrachloroethene	102		104		70-130	2		20
Chlorobenzene	99		100		70-130	1		20
Trichlorofluoromethane	102		104		70-130	2		20
1,2-Dichloroethane	105		106		70-130	1		20
1,1,1-Trichloroethane	107		108		70-130	1		20
Bromodichloromethane	102		106		70-130	4		20
trans-1,3-Dichloropropene	91		95		70-130	4		20
cis-1,3-Dichloropropene	99		104		70-130	5		20
1,1-Dichloropropene	100		101		70-130	1		20
Bromoform	94		97		70-130	3		20
1,1,2,2-Tetrachloroethane	92		97		70-130	5		20
Benzene	97		100		70-130	3		20
Toluene	95		99		70-130	4		20
Ethylbenzene	98		101		70-130	3		20

Lab Control Sample Analysis
Batch Quality Control

Project Name: NBHS IRA PSWS
Project Number: 115058

Lab Number: L1403530
Report Date: 02/25/14

Parameter	LCS %Recovery	Qual	LCSD %Recovery	Qual	%Recovery Limits	RPD	Qual	RPD Limits
MCP Volatile Organics - Westborough Lab Associated sample(s): 01,03-04,07,10 Batch: WG670768-1 WG670768-2								
Chloromethane	89		87		70-130	2		20
Bromomethane	104		92		70-130	12		20
Vinyl chloride	93		88		70-130	6		20
Chloroethane	95		92		70-130	3		20
1,1-Dichloroethene	101		104		70-130	3		20
trans-1,2-Dichloroethene	102		106		70-130	4		20
Trichloroethene	104		104		70-130	0		20
1,2-Dichlorobenzene	97		100		70-130	3		20
1,3-Dichlorobenzene	98		99		70-130	1		20
1,4-Dichlorobenzene	97		97		70-130	0		20
Methyl tert butyl ether	95		100		70-130	5		20
p/m-Xylene	99		103		70-130	4		20
o-Xylene	99		101		70-130	2		20
cis-1,2-Dichloroethene	102		106		70-130	4		20
Dibromomethane	103		107		70-130	4		20
1,2,3-Trichloropropane	87		94		70-130	8		20
Styrene	99		102		70-130	3		20
Dichlorodifluoromethane	79		80		70-130	1		20
Acetone	86		81		70-130	6		20
Carbon disulfide	95		97		70-130	2		20
2-Butanone	76		78		70-130	3		20

Lab Control Sample Analysis
Batch Quality Control

Project Name: NBHS IRA PSWS
Project Number: 115058

Lab Number: L1403530
Report Date: 02/25/14

Parameter	LCS %Recovery	Qual	LCSD %Recovery	Qual	%Recovery Limits	RPD	Qual	RPD Limits
MCP Volatile Organics - Westborough Lab Associated sample(s): 01,03-04,07,10 Batch: WG670768-1 WG670768-2								
4-Methyl-2-pentanone	103		109		70-130	6		20
2-Hexanone	93		92		70-130	1		20
Bromochloromethane	110		111		70-130	1		20
Tetrahydrofuran	93		102		70-130	9		20
2,2-Dichloropropane	106		105		70-130	1		20
1,2-Dibromoethane	90		97		70-130	7		20
1,3-Dichloropropane	91		95		70-130	4		20
1,1,1,2-Tetrachloroethane	98		102		70-130	4		20
Bromobenzene	100		98		70-130	2		20
n-Butylbenzene	100		97		70-130	3		20
sec-Butylbenzene	99		97		70-130	2		20
tert-Butylbenzene	100		97		70-130	3		20
o-Chlorotoluene	97		97		70-130	0		20
p-Chlorotoluene	96		97		70-130	1		20
1,2-Dibromo-3-chloropropane	91		97		70-130	6		20
Hexachlorobutadiene	108		102		70-130	6		20
Isopropylbenzene	97		96		70-130	1		20
p-Isopropyltoluene	100		99		70-130	1		20
Naphthalene	93		96		70-130	3		20
n-Propylbenzene	97		96		70-130	1		20
1,2,3-Trichlorobenzene	96		98		70-130	2		20

Lab Control Sample Analysis
Batch Quality Control

Project Name: NBHS IRA PSWS
Project Number: 115058

Lab Number: L1403530
Report Date: 02/25/14

Parameter	LCS %Recovery	Qual	LCSD %Recovery	Qual	%Recovery Limits	RPD	Qual	RPD Limits
MCP Volatile Organics - Westborough Lab Associated sample(s): 01,03-04,07,10 Batch: WG670768-1 WG670768-2								
1,2,4-Trichlorobenzene	96		98		70-130	2		20
1,3,5-Trimethylbenzene	99		95		70-130	4		20
1,2,4-Trimethylbenzene	96		96		70-130	0		20
Ethyl ether	98		104		70-130	6		20
Isopropyl Ether	93		98		70-130	5		20
Ethyl-Tert-Butyl-Ether	95		97		70-130	2		20
Tertiary-Amyl Methyl Ether	99		102		70-130	3		20
1,4-Dioxane	100		112		70-130	11		20

Surrogate	LCS %Recovery	Qual	LCSD %Recovery	Qual	Acceptance Criteria
1,2-Dichloroethane-d4	99		101		70-130
Toluene-d8	93		97		70-130
4-Bromofluorobenzene	96		97		70-130
Dibromofluoromethane	104		107		70-130

Lab Control Sample Analysis
Batch Quality Control

Project Name: NBHS IRA PSWS
Project Number: 115058
Lab Number: L1403530
Report Date: 02/25/14

Parameter	LCS %Recovery	Qual	LCSD %Recovery	Qual	%Recovery Limits	RPD	Qual	RPD Limits
MCP Volatile Organics - Westborough Lab Associated sample(s): 03 Batch: WG670768-4 WG670768-5								
cis-1,2-Dichloroethene	103		104		70-130	1		20

Surrogate	LCS %Recovery	Qual	LCSD %Recovery	Qual	Acceptance Criteria
1,2-Dichloroethane-d4	104		99		70-130
Toluene-d8	93		95		70-130
4-Bromofluorobenzene	92		99		70-130
Dibromofluoromethane	100		105		70-130

PETROLEUM HYDROCARBONS

Project Name: NBHS IRA PSWS **Lab Number:** L1403530

Project Number: 115058 **Report Date:** 02/25/14

SAMPLE RESULTS

Lab ID:	L1403530-01	Date Collected:	02/14/14 08:00
Client ID:	INFLUENT	Date Received:	02/14/14
Sample Location:	NEW BEDFORD, MA	Field Prep:	Not Specified
Matrix:	Water	Extraction Method:	EPA 3510C
Analytical Method:	1,8015C(M)	Extraction Date:	02/16/14 13:42
Analytical Date:	02/18/14 10:36		
Analyst:	AR		

Parameter	Result	Qualifier	Units	RL	MDL	Dilution Factor
Petroleum Hydrocarbon Quantitation - Westborough Lab						
TPH	245		ug/l	200	--	1

Surrogate	% Recovery	Qualifier	Acceptance Criteria
o-Terphenyl	105		40-140

Project Name: NBHS IRA PSWS **Lab Number:** L1403530

Project Number: 115058 **Report Date:** 02/25/14

SAMPLE RESULTS

Lab ID:	L1403530-02	Date Collected:	02/14/14 08:00
Client ID:	INFLUENT (LAB FILTERED 0.2)	Date Received:	02/14/14
Sample Location:	NEW BEDFORD, MA	Field Prep:	Not Specified
Matrix:	Water	Extraction Method:	EPA 3510C
Analytical Method:	1,8015C(M)	Extraction Date:	02/16/14 13:42
Analytical Date:	02/18/14 11:08		
Analyst:	AR		

Parameter	Result	Qualifier	Units	RL	MDL	Dilution Factor
Petroleum Hydrocarbon Quantitation - Westborough Lab						
TPH	ND		ug/l	200	--	1

Surrogate	% Recovery	Qualifier	Acceptance Criteria
o-Terphenyl	96		40-140

Project Name: NBHS IRA PSWS
Project Number: 115058

Lab Number: L1403530
Report Date: 02/25/14

Method Blank Analysis
Batch Quality Control

Analytical Method: 1,8015C(M)
Analytical Date: 02/18/14 09:00
Analyst: AR

Extraction Method: EPA 3510C
Extraction Date: 02/16/14 13:42

Parameter	Result	Qualifier	Units	RL	MDL
Petroleum Hydrocarbon Quantitation - Westborough Lab for sample(s): 01-02 Batch: WG670675-1					
TPH	ND		ug/l	200	--

Surrogate	%Recovery	Qualifier	Acceptance Criteria
o-Terphenyl	103		40-140

Lab Control Sample Analysis
Batch Quality Control

Project Name: NBHS IRA PSWS
Project Number: 115058

Lab Number: L1403530
Report Date: 02/25/14

Parameter	LCS %Recovery	Qual	LCSD %Recovery	Qual	%Recovery Limits	RPD	Qual	RPD Limits
Petroleum Hydrocarbon Quantitation - Westborough Lab Associated sample(s): 01-02 Batch: WG670675-2								
TPH	138		-		40-140	-		40

Surrogate	LCS %Recovery	Qual	LCSD %Recovery	Qual	Acceptance Criteria
o-Terphenyl	111				40-140

Lab Duplicate Analysis
Batch Quality Control

Project Name: NBHS IRA PSWS
Project Number: 115058

Lab Number: L1403530
Report Date: 02/25/14

Parameter	Native Sample	Duplicate Sample	Units	RPD	Qual	RPD Limits
Petroleum Hydrocarbon Quantitation - Westborough Lab Associated sample(s): 01-02 QC Batch ID: WG670675-3 QC Sample: L1403530-01 Client ID: INFLUENT						
TPH	245	230	ug/l	6		40

Surrogate	%Recovery	Qualifier	%Recovery	Qualifier	Acceptance Criteria
o-Terphenyl	105		100		40-140

PCBS

Project Name: NBHS IRA PSWS **Lab Number:** L1403530

Project Number: 115058 **Report Date:** 02/25/14

SAMPLE RESULTS

Lab ID:	L1403530-01	D	Date Collected:	02/14/14 08:00
Client ID:	INFLUENT		Date Received:	02/14/14
Sample Location:	NEW BEDFORD, MA		Field Prep:	Not Specified
Matrix:	Water		Extraction Method:	EPA 3510C
Analytical Method:	97,8082		Extraction Date:	02/18/14 04:57
Analytical Date:	02/24/14 20:46		Cleanup Method1:	EPA 3665A
Analyst:	KB		Cleanup Date1:	02/18/14
			Cleanup Method2:	EPA 3660B
			Cleanup Date2:	02/18/14

Parameter	Result	Qualifier	Units	RL	MDL	Dilution Factor	Column
MCP Polychlorinated Biphenyls - Westborough Lab							
Aroclor 1016	ND		ug/l	2.50	--	10	A
Aroclor 1221	ND		ug/l	2.50	--	10	A
Aroclor 1232	ND		ug/l	2.50	--	10	A
Aroclor 1242	ND		ug/l	2.50	--	10	A
Aroclor 1248	ND		ug/l	2.50	--	10	A
Aroclor 1254	57.5		ug/l	2.50	--	10	B
Aroclor 1260	ND		ug/l	2.50	--	10	A
Aroclor 1262	ND		ug/l	2.50	--	10	A
Aroclor 1268	ND		ug/l	2.50	--	10	A

Surrogate	% Recovery	Qualifier	Acceptance Criteria	Column
2,4,5,6-Tetrachloro-m-xylene	**0**	Q	30-150	A
Decachlorobiphenyl	**0**	Q	30-150	A
2,4,5,6-Tetrachloro-m-xylene	**0**	Q	30-150	B
Decachlorobiphenyl	**0**	Q	30-150	B

Project Name: NBHS IRA PSWS **Lab Number:** L1403530

Project Number: 115058 **Report Date:** 02/25/14

SAMPLE RESULTS

Lab ID:	L1403530-02	Date Collected:	02/14/14 08:00
Client ID:	INFLUENT (LAB FILTERED 0.2)	Date Received:	02/14/14
Sample Location:	NEW BEDFORD, MA	Field Prep:	Not Specified
Matrix:	Water	Extraction Method:	EPA 3510C
Analytical Method:	97,8082	Extraction Date:	02/18/14 04:57
Analytical Date:	02/18/14 14:57	Cleanup Method1:	EPA 3665A
Analyst:	KB	Cleanup Date1:	02/18/14
		Cleanup Method2:	EPA 3660B
		Cleanup Date2:	02/18/14

Parameter	Result	Qualifier	Units	RL	MDL	Dilution Factor	Column
MCP Polychlorinated Biphenyls - Westborough Lab							
Aroclor 1016	ND		ug/l	0.250	--	1	A
Aroclor 1221	ND		ug/l	0.250	--	1	A
Aroclor 1232	ND		ug/l	0.250	--	1	A
Aroclor 1242	ND		ug/l	0.250	--	1	A
Aroclor 1248	ND		ug/l	0.250	--	1	A
Aroclor 1254	ND		ug/l	0.250	--	1	A
Aroclor 1260	ND		ug/l	0.250	--	1	A
Aroclor 1262	ND		ug/l	0.250	--	1	A
Aroclor 1268	ND		ug/l	0.250	--	1	A

Surrogate	% Recovery	Qualifier	Acceptance Criteria	Column
2,4,5,6-Tetrachloro-m-xylene	69		30-150	A
Decachlorobiphenyl	61		30-150	A
2,4,5,6-Tetrachloro-m-xylene	71		30-150	B
Decachlorobiphenyl	55		30-150	B

Project Name: NBHS IRA PSWS **Lab Number:** L1403530

Project Number: 115058 **Report Date:** 02/25/14

SAMPLE RESULTS

Lab ID:	L1403530-03	Date Collected:	02/14/14 08:10
Client ID:	EFFLUENT	Date Received:	02/14/14
Sample Location:	NEW BEDFORD, MA	Field Prep:	Not Specified
Matrix:	Water	Extraction Method:	EPA 3510C
Analytical Method:	97,8082	Extraction Date:	02/18/14 04:57
Analytical Date:	02/18/14 15:10	Cleanup Method1:	EPA 3665A
Analyst:	KB	Cleanup Date1:	02/18/14
		Cleanup Method2:	EPA 3660B
		Cleanup Date2:	02/18/14

Parameter	Result	Qualifier	Units	RL	MDL	Dilution Factor	Column
MCP Polychlorinated Biphenyls - Westborough Lab							
Aroclor 1016	ND		ug/l	0.250	--	1	A
Aroclor 1221	ND		ug/l	0.250	--	1	A
Aroclor 1232	ND		ug/l	0.250	--	1	A
Aroclor 1242	ND		ug/l	0.250	--	1	A
Aroclor 1248	ND		ug/l	0.250	--	1	A
Aroclor 1254	ND		ug/l	0.250	--	1	A
Aroclor 1260	ND		ug/l	0.250	--	1	A
Aroclor 1262	ND		ug/l	0.250	--	1	A
Aroclor 1268	ND		ug/l	0.250	--	1	A

Surrogate	% Recovery	Qualifier	Acceptance Criteria	Column
2,4,5,6-Tetrachloro-m-xylene	69		30-150	A
Decachlorobiphenyl	99		30-150	A
2,4,5,6-Tetrachloro-m-xylene	70		30-150	B
Decachlorobiphenyl	85		30-150	B

Project Name: NBHS IRA PSWS **Lab Number:** L1403530

Project Number: 115058 **Report Date:** 02/25/14

SAMPLE RESULTS

Lab ID:	L1403530-04	D	Date Collected:	02/14/14 09:55
Client ID:	MW-27R		Date Received:	02/14/14
Sample Location:	NEW BEDFORD, MA		Field Prep:	Not Specified
Matrix:	Water		Extraction Method:	EPA 3510C
Analytical Method:	97,8082		Extraction Date:	02/18/14 04:57
Analytical Date:	02/24/14 20:58		Cleanup Method1:	EPA 3665A
Analyst:	KB		Cleanup Date1:	02/18/14
			Cleanup Method2:	EPA 3660B
			Cleanup Date2:	02/18/14

Parameter	Result	Qualifier	Units	RL	MDL	Dilution Factor	Column
MCP Polychlorinated Biphenyls - Westborough Lab							
Aroclor 1016	ND		ug/l	0.500	--	2	A
Aroclor 1221	ND		ug/l	0.500	--	2	A
Aroclor 1232	ND		ug/l	0.500	--	2	A
Aroclor 1242	ND		ug/l	0.500	--	2	A
Aroclor 1248	ND		ug/l	0.500	--	2	A
Aroclor 1254	6.95		ug/l	0.500	--	2	A
Aroclor 1260	ND		ug/l	0.500	--	2	A
Aroclor 1262	ND		ug/l	0.500	--	2	A
Aroclor 1268	ND		ug/l	0.500	--	2	A

Surrogate	% Recovery	Qualifier	Acceptance Criteria	Column
2,4,5,6-Tetrachloro-m-xylene	67		30-150	A
Decachlorobiphenyl	71		30-150	A
2,4,5,6-Tetrachloro-m-xylene	67		30-150	B
Decachlorobiphenyl	62		30-150	B

Project Name: NBHS IRA PSWS **Lab Number:** L1403530

Project Number: 115058 **Report Date:** 02/25/14

SAMPLE RESULTS

Lab ID:	L1403530-05	Date Collected:	02/14/14 09:55
Client ID:	MW-27R (LAB FILTERED 0.2)	Date Received:	02/14/14
Sample Location:	NEW BEDFORD, MA	Field Prep:	Not Specified
Matrix:	Water	Extraction Method:	EPA 3510C
Analytical Method:	97,8082	Extraction Date:	02/18/14 04:57
Analytical Date:	02/18/14 15:37	Cleanup Method1:	EPA 3665A
Analyst:	KB	Cleanup Date1:	02/18/14
		Cleanup Method2:	EPA 3660B
		Cleanup Date2:	02/18/14

Parameter	Result	Qualifier	Units	RL	MDL	Dilution Factor	Column
MCP Polychlorinated Biphenyls - Westborough Lab							
Aroclor 1016	ND		ug/l	0.250	--	1	A
Aroclor 1221	ND		ug/l	0.250	--	1	A
Aroclor 1232	ND		ug/l	0.250	--	1	A
Aroclor 1242	ND		ug/l	0.250	--	1	A
Aroclor 1248	ND		ug/l	0.250	--	1	A
Aroclor 1254	ND		ug/l	0.250	--	1	A
Aroclor 1260	ND		ug/l	0.250	--	1	A
Aroclor 1262	ND		ug/l	0.250	--	1	A
Aroclor 1268	ND		ug/l	0.250	--	1	A

Surrogate	% Recovery	Qualifier	Acceptance Criteria	Column
2,4,5,6-Tetrachloro-m-xylene	68		30-150	A
Decachlorobiphenyl	73		30-150	A
2,4,5,6-Tetrachloro-m-xylene	71		30-150	B
Decachlorobiphenyl	63		30-150	B

Project Name: NBHS IRA PSWS **Lab Number:** L1403530

Project Number: 115058 **Report Date:** 02/25/14

SAMPLE RESULTS

Lab ID:	L1403530-06	Date Collected:	02/14/14 09:55
Client ID:	MW-27R (FIELD FILTERED 0.45)	Date Received:	02/14/14
Sample Location:	NEW BEDFORD, MA	Field Prep:	Field Filtered
Matrix:	Water	Extraction Method:	EPA 3510C
Analytical Method:	97,8082	Extraction Date:	02/18/14 04:57
Analytical Date:	02/18/14 15:50	Cleanup Method1:	EPA 3665A
Analyst:	KB	Cleanup Date1:	02/18/14
		Cleanup Method2:	EPA 3660B
		Cleanup Date2:	02/18/14

Parameter	Result	Qualifier	Units	RL	MDL	Dilution Factor	Column
MCP Polychlorinated Biphenyls - Westborough Lab							
Aroclor 1016	ND		ug/l	0.250	--	1	A
Aroclor 1221	ND		ug/l	0.250	--	1	A
Aroclor 1232	ND		ug/l	0.250	--	1	A
Aroclor 1242	ND		ug/l	0.250	--	1	A
Aroclor 1248	ND		ug/l	0.250	--	1	A
Aroclor 1254	ND		ug/l	0.250	--	1	A
Aroclor 1260	ND		ug/l	0.250	--	1	A
Aroclor 1262	ND		ug/l	0.250	--	1	A
Aroclor 1268	ND		ug/l	0.250	--	1	A

Surrogate	% Recovery	Qualifier	Acceptance Criteria	Column
2,4,5,6-Tetrachloro-m-xylene	72		30-150	A
Decachlorobiphenyl	96		30-150	A
2,4,5,6-Tetrachloro-m-xylene	74		30-150	B
Decachlorobiphenyl	83		30-150	B

Project Name: NBHS IRA PSWS **Lab Number:** L1403530

Project Number: 115058 **Report Date:** 02/25/14

SAMPLE RESULTS

Lab ID:	L1403530-07	D	Date Collected:	02/14/14 10:50
Client ID:	MW-42R		Date Received:	02/14/14
Sample Location:	NEW BEDFORD, MA		Field Prep:	Not Specified
Matrix:	Water		Extraction Method:	EPA 3510C
Analytical Method:	97,8082		Extraction Date:	02/18/14 04:57
Analytical Date:	02/24/14 21:10		Cleanup Method1:	EPA 3665A
Analyst:	KB		Cleanup Date1:	02/18/14
			Cleanup Method2:	EPA 3660B
			Cleanup Date2:	02/18/14

Parameter	Result	Qualifier	Units	RL	MDL	Dilution Factor	Column
MCP Polychlorinated Biphenyls - Westborough Lab							
Aroclor 1016	ND		ug/l	0.500	--	2	A
Aroclor 1221	ND		ug/l	0.500	--	2	A
Aroclor 1232	ND		ug/l	0.500	--	2	A
Aroclor 1242	ND		ug/l	0.500	--	2	A
Aroclor 1248	ND		ug/l	0.500	--	2	A
Aroclor 1254	6.66		ug/l	0.500	--	2	A
Aroclor 1260	ND		ug/l	0.500	--	2	A
Aroclor 1262	ND		ug/l	0.500	--	2	A
Aroclor 1268	ND		ug/l	0.500	--	2	A

Surrogate	% Recovery	Qualifier	Acceptance Criteria	Column
2,4,5,6-Tetrachloro-m-xylene	74		30-150	A
Decachlorobiphenyl	89		30-150	A
2,4,5,6-Tetrachloro-m-xylene	79		30-150	B
Decachlorobiphenyl	80		30-150	B

Project Name: NBHS IRA PSWS **Lab Number:** L1403530

Project Number: 115058 **Report Date:** 02/25/14

SAMPLE RESULTS

Lab ID:	L1403530-08	Date Collected:	02/14/14 10:50
Client ID:	MW-42R (LAB FILTERED 0.2)	Date Received:	02/14/14
Sample Location:	NEW BEDFORD, MA	Field Prep:	Not Specified
Matrix:	Water	Extraction Method:	EPA 3510C
Analytical Method:	97,8082	Extraction Date:	02/18/14 04:57
Analytical Date:	02/18/14 16:16	Cleanup Method1:	EPA 3665A
Analyst:	KB	Cleanup Date1:	02/18/14
		Cleanup Method2:	EPA 3660B
		Cleanup Date2:	02/18/14

Parameter	Result	Qualifier	Units	RL	MDL	Dilution Factor	Column
MCP Polychlorinated Biphenyls - Westborough Lab							
Aroclor 1016	ND		ug/l	0.250	--	1	A
Aroclor 1221	ND		ug/l	0.250	--	1	A
Aroclor 1232	ND		ug/l	0.250	--	1	A
Aroclor 1242	ND		ug/l	0.250	--	1	A
Aroclor 1248	ND		ug/l	0.250	--	1	A
Aroclor 1254	ND		ug/l	0.250	--	1	A
Aroclor 1260	ND		ug/l	0.250	--	1	A
Aroclor 1262	ND		ug/l	0.250	--	1	A
Aroclor 1268	ND		ug/l	0.250	--	1	A

Surrogate	% Recovery	Qualifier	Acceptance Criteria	Column
2,4,5,6-Tetrachloro-m-xylene	69		30-150	A
Decachlorobiphenyl	74		30-150	A
2,4,5,6-Tetrachloro-m-xylene	71		30-150	B
Decachlorobiphenyl	63		30-150	B

Project Name: NBHS IRA PSWS **Lab Number:** L1403530

Project Number: 115058 **Report Date:** 02/25/14

SAMPLE RESULTS

Lab ID:	L1403530-09	Date Collected:	02/14/14 10:50
Client ID:	MW-42R (FIELD FILTERED 0.45)	Date Received:	02/14/14
Sample Location:	NEW BEDFORD, MA	Field Prep:	Field Filtered
Matrix:	Water	Extraction Method:	EPA 3510C
Analytical Method:	97,8082	Extraction Date:	02/18/14 04:57
Analytical Date:	02/18/14 16:29	Cleanup Method1:	EPA 3665A
Analyst:	KB	Cleanup Date1:	02/18/14
		Cleanup Method2:	EPA 3660B
		Cleanup Date2:	02/18/14

Parameter	Result	Qualifier	Units	RL	MDL	Dilution Factor	Column
MCP Polychlorinated Biphenyls - Westborough Lab							
Aroclor 1016	ND		ug/l	0.250	--	1	A
Aroclor 1221	ND		ug/l	0.250	--	1	A
Aroclor 1232	ND		ug/l	0.250	--	1	A
Aroclor 1242	ND		ug/l	0.250	--	1	A
Aroclor 1248	ND		ug/l	0.250	--	1	A
Aroclor 1254	ND		ug/l	0.250	--	1	A
Aroclor 1260	ND		ug/l	0.250	--	1	A
Aroclor 1262	ND		ug/l	0.250	--	1	A
Aroclor 1268	ND		ug/l	0.250	--	1	A

Surrogate	% Recovery	Qualifier	Acceptance Criteria	Column
2,4,5,6-Tetrachloro-m-xylene	67		30-150	A
Decachlorobiphenyl	97		30-150	A
2,4,5,6-Tetrachloro-m-xylene	69		30-150	B
Decachlorobiphenyl	83		30-150	B

Project Name: NBHS IRA PSWS

Project Number: 115058

Lab Number: L1403530

Report Date: 02/25/14

Method Blank Analysis
Batch Quality Control

Analytical Method: 97,8082
Analytical Date: 02/18/14 16:56
Analyst: KB

Extraction Method: EPA 3510C
Extraction Date: 02/18/14 04:57
Cleanup Method1: EPA 3665A
Cleanup Date1: 02/18/14
Cleanup Method2: EPA 3660B
Cleanup Date2: 02/18/14

Parameter	Result	Qualifier	Units	RL	MDL	Column
MCP Polychlorinated Biphenyls - Westborough Lab for sample(s): 01-09 Batch: WG670876-1						
Aroclor 1016	ND		ug/l	0.250	--	A
Aroclor 1221	ND		ug/l	0.250	--	A
Aroclor 1232	ND		ug/l	0.250	--	A
Aroclor 1242	ND		ug/l	0.250	--	A
Aroclor 1248	ND		ug/l	0.250	--	A
Aroclor 1254	ND		ug/l	0.250	--	A
Aroclor 1260	ND		ug/l	0.250	--	A
Aroclor 1262	ND		ug/l	0.250	--	A
Aroclor 1268	ND		ug/l	0.250	--	A

Surrogate	%Recovery	Qualifier	Acceptance Criteria	Column
2,4,5,6-Tetrachloro-m-xylene	50		30-150	A
Decachlorobiphenyl	95		30-150	A
2,4,5,6-Tetrachloro-m-xylene	51		30-150	B
Decachlorobiphenyl	82		30-150	B

Lab Control Sample Analysis
Batch Quality Control

Project Name: NBHS IRA PSWS
Project Number: 115058

Lab Number: L1403530
Report Date: 02/25/14

Parameter	LCS %Recovery	Qual	LCSD %Recovery	Qual	%Recovery Limits	RPD	Qual	RPD Limits	Column
MCP Polychlorinated Biphenyls - Westborough Lab Associated sample(s): 01-09 Batch: WG670876-2 WG670876-3									
Aroclor 1016	95		96		40-140	1		20	A
Aroclor 1260	106		110		40-140	4		20	A

Surrogate	LCS %Recovery	Qual	LCSD %Recovery	Qual	Acceptance Criteria	Column
2,4,5,6-Tetrachloro-m-xylene	57		62		30-150	A
Decachlorobiphenyl	92		91		30-150	A
2,4,5,6-Tetrachloro-m-xylene	56		61		30-150	B
Decachlorobiphenyl	81		78		30-150	B

Project Name: NBHS IRA PSWS
Project Number: 115058

Lab Number: L1403530
Report Date: 02/25/14

Sample Receipt and Container Information

Were project specific reporting limits specified? YES

Reagent H2O Preserved Vials Frozen on: NA

Cooler Information Custody Seal

Cooler	
A	Absent
B	Absent

Container Information

Container ID	Container Type	Cooler	pH	Temp deg C	Pres	Seal	Analysis(*)
L1403530-01A	Vial HCl preserved	A	N/A	4.1	Y	Absent	MCP-8260-10(14)
L1403530-01B	Vial HCl preserved	A	N/A	4.1	Y	Absent	MCP-8260-10(14)
L1403530-01C	Vial HCl preserved	A	N/A	4.1	Y	Absent	MCP-8260-10(14)
L1403530-01D	Amber 1000ml unpreserved	A	7	4.1	Y	Absent	MCP-8082-10(365)
L1403530-01E	Amber 1000ml unpreserved	A	7	4.1	Y	Absent	MCP-8082-10(365)
L1403530-01F	Amber 1000ml unpreserved	A	7	4.1	Y	Absent	TPH-DRO-D(7)
L1403530-01G	Amber 1000ml unpreserved	A	7	4.1	Y	Absent	TPH-DRO-D(7)
L1403530-02A	Amber 1000ml unpreserved	A	7	4.1	Y	Absent	FILTER-EXT(1)
L1403530-02B	Amber 1000ml unpreserved	A	7	4.1	Y	Absent	FILTER-EXT(1)
L1403530-02C	Amber 1000ml unpreserved	A	7	4.1	Y	Absent	FILTER-EXT(1)
L1403530-02D	Amber 1000ml unpreserved	A	7	4.1	Y	Absent	FILTER-EXT(1)
L1403530-02S	Amber 1000ml unpreserved split	A	N/A	4.1	Y	Absent	MCP-8082-10(365)
L1403530-02T	Amber 1000ml unpreserved split	A	N/A	4.1	Y	Absent	MCP-8082-10(365)
L1403530-02X	Amber 1000ml unpreserved split	A	N/A	4.1	Y	Absent	TPH-DRO-D(7)
L1403530-02Y	Amber 1000ml unpreserved split	A	N/A	4.1	Y	Absent	TPH-DRO-D(7)
L1403530-03A	Vial HCl preserved	B	N/A	4.8	Y	Absent	MCP-8260-10(14)
L1403530-03B	Vial HCl preserved	B	N/A	4.8	Y	Absent	MCP-8260-10(14)
L1403530-03C	Vial HCl preserved	B	N/A	4.8	Y	Absent	MCP-8260-10(14)
L1403530-03D	Amber 1000ml unpreserved	B	7	4.8	Y	Absent	MCP-8082-10(365)
L1403530-03E	Amber 1000ml unpreserved	B	7	4.8	Y	Absent	MCP-8082-10(365)
L1403530-04A	Vial HCl preserved	B	N/A	4.8	Y	Absent	MCP-8260-10(14)
L1403530-04B	Vial HCl preserved	B	N/A	4.8	Y	Absent	MCP-8260-10(14)
L1403530-04C	Vial HCl preserved	B	N/A	4.8	Y	Absent	MCP-8260-10(14)
L1403530-04D	Amber 1000ml unpreserved	B	7	4.8	Y	Absent	MCP-8082-10(365)
L1403530-04E	Amber 1000ml unpreserved	B	7	4.8	Y	Absent	MCP-8082-10(365)
L1403530-05A	Amber 1000ml unpreserved	B	7	4.8	Y	Absent	FILTER-EXT(1)

*Values in parentheses indicate holding time in days

Project Name: NBHS IRA PSWS
Project Number: 115058

Lab Number: L1403530
Report Date: 02/25/14

Container Information

Container ID	Container Type	Cooler	pH	Temp deg C	Pres	Seal	Analysis(*)
L1403530-05B	Amber 1000ml unpreserved	B	7	4.8	Y	Absent	FILTER-EXT(1)
L1403530-05X	Amber 1000ml unpreserved split	B	N/A	4.8	Y	Absent	MCP-8082-10(365)
L1403530-05Y	Amber 1000ml unpreserved split	B	N/A	4.8	Y	Absent	MCP-8082-10(365)
L1403530-06A	Amber 1000ml unpreserved	B	7	4.8	Y	Absent	MCP-8082-10(365)
L1403530-06B	Amber 1000ml unpreserved	B	7	4.8	Y	Absent	MCP-8082-10(365)
L1403530-07A	Vial HCl preserved	B	N/A	4.8	Y	Absent	MCP-8260-10(14)
L1403530-07B	Vial HCl preserved	B	N/A	4.8	Y	Absent	MCP-8260-10(14)
L1403530-07C	Vial HCl preserved	B	N/A	4.8	Y	Absent	MCP-8260-10(14)
L1403530-07D	Amber 1000ml unpreserved	B	7	4.8	Y	Absent	MCP-8082-10(365)
L1403530-07E	Amber 1000ml unpreserved	B	7	4.8	Y	Absent	MCP-8082-10(365)
L1403530-08A	Amber 1000ml unpreserved	B	7	4.8	Y	Absent	FILTER-EXT(1)
L1403530-08B	Amber 1000ml unpreserved	B	7	4.8	Y	Absent	FILTER-EXT(1)
L1403530-08X	Amber 1000ml unpreserved split	B	N/A	4.8	Y	Absent	MCP-8082-10(365)
L1403530-08Y	Amber 1000ml unpreserved split	B	N/A	4.8	Y	Absent	MCP-8082-10(365)
L1403530-09A	Amber 1000ml unpreserved	B	7	4.8	Y	Absent	MCP-8082-10(365)
L1403530-09B	Amber 1000ml unpreserved	B	7	4.8	Y	Absent	MCP-8082-10(365)
L1403530-10A	Vial HCl preserved	B	N/A	4.8	Y	Absent	MCP-8260-10(14)

Container Comments

L1403530-02A

L1403530-02B

L1403530-02C

L1403530-02D

L1403530-05A

L1403530-05B

L1403530-08A

L1403530-08B

*Values in parentheses indicate holding time in days

Project Name:	NBHS IRA PSWS	**Lab Number:**	L1403530
Project Number:	115058	**Report Date:**	02/25/14

GLOSSARY

Acronyms

EDL	- Estimated Detection Limit: This value represents the level to which target analyte concentrations are reported as estimated values, when those target analyte concentrations are quantified below the reporting limit (RL). The EDL includes any adjustments from dilutions, concentrations or moisture content, where applicable. The use of EDLs is specific to the analysis of PAHs using Solid-Phase Microextraction (SPME).
EPA	- Environmental Protection Agency.
LCS	- Laboratory Control Sample: A sample matrix, free from the analytes of interest, spiked with verified known amounts of analytes or a material containing known and verified amounts of analytes.
LCSD	- Laboratory Control Sample Duplicate: Refer to LCS.
LFB	- Laboratory Fortified Blank: A sample matrix, free from the analytes of interest, spiked with verified known amounts of analytes or a material containing known and verified amounts of analytes.
MDL	- Method Detection Limit: This value represents the level to which target analyte concentrations are reported as estimated values, when those target analyte concentrations are quantified below the reporting limit (RL). The MDL includes any adjustments from dilutions, concentrations or moisture content, where applicable.
MS	- Matrix Spike Sample: A sample prepared by adding a known mass of target analyte to a specified amount of matrix sample for which an independent estimate of target analyte concentration is available.
MSD	- Matrix Spike Sample Duplicate: Refer to MS.
NA	- Not Applicable.
NC	- Not Calculated: Term is utilized when one or more of the results utilized in the calculation are non-detect at the parameter's reporting unit.
NI	- Not Ignitable.
RL	- Reporting Limit: The value at which an instrument can accurately measure an analyte at a specific concentration. The RL includes any adjustments from dilutions, concentrations or moisture content, where applicable.
RPD	- Relative Percent Difference: The results from matrix and/or matrix spike duplicates are primarily designed to assess the precision of analytical results in a given matrix and are expressed as relative percent difference (RPD). Values which are less than five times the reporting limit for any individual parameter are evaluated by utilizing the absolute difference between the values; although the RPD value will be provided in the report.
SRM	- Standard Reference Material: A reference sample of a known or certified value that is of the same or similar matrix as the associated field samples.

Footnotes

1	- The reference for this analyte should be considered modified since this analyte is absent from the target analyte list of the original method.

Terms

Analytical Method: Both the document from which the method originates and the analytical reference method. (Example: EPA 8260B is shown as 1,8260B.) The codes for the reference method documents are provided in the References section of the Addendum.

Data Qualifiers

A	- Spectra identified as "Aldol Condensation Product".
B	- The analyte was detected above the reporting limit in the associated method blank. Flag only applies to associated field samples that have detectable concentrations of the analyte at less than ten times (10x) the concentration found in the blank. For MCP-related projects, flag only applies to associated field samples that have detectable concentrations of the analyte at less than ten times (10x) the concentration found in the blank. For DOD-related projects, flag only applies to associated field samples that have detectable concentrations of the analyte at less than ten times (10x) the concentration found in the blank AND the analyte was detected above one-half the reporting limit (or above the reporting limit for common lab contaminants) in the associated method blank. For NJ-Air-related projects, flag only applies to associated field samples that have detectable concentrations of the analyte above the reporting limit.
C	- Co-elution: The target analyte co-elutes with a known lab standard (i.e. surrogate, internal standards, etc.) for co-extracted analyses.
D	- Concentration of analyte was quantified from diluted analysis. Flag only applies to field samples that have detectable concentrations of the analyte.
E	- Concentration of analyte exceeds the range of the calibration curve and/or linear range of the instrument.
G	- The concentration may be biased high due to matrix interferences (i.e, co-elution) with non-target compound(s). The result should be considered estimated.
H	- The analysis of pH was performed beyond the regulatory-required holding time of 15 minutes from the time of sample collection.
I	- The lower value for the two columns has been reported due to obvious interference.

Report Format: Data Usability Report

Project Name:	NBHS IRA PSWS	**Lab Number:**	L1403530
Project Number:	115058	**Report Date:**	02/25/14

Data Qualifiers

M - Reporting Limit (RL) exceeds the MCP CAM Reporting Limit for this analyte.

NJ - Presumptive evidence of compound. This represents an estimated concentration for Tentatively Identified Compounds (TICs), where the identification is based on a mass spectral library search.

P - The RPD between the results for the two columns exceeds the method-specified criteria.

Q - The quality control sample exceeds the associated acceptance criteria. For DOD-related projects, LCS and/or Continuing Calibration Standard exceedences are also qualified on all associated sample results. Note: This flag is not applicable for matrix spike recoveries when the sample concentration is greater than 4x the spike added or for batch duplicate RPD when the sample concentrations are less than 5x the RL. (Metals only.)

R - Analytical results are from sample re-analysis.

RE - Analytical results are from sample re-extraction.

S - Analytical results are from modified screening analysis.

J - Estimated value. This represents an estimated concentration for Tentatively Identified Compounds (TICs).

ND - Not detected at the reporting limit (RL) for the sample.

Report Format: Data Usability Report

Project Name: NBHS IRA PSWS **Lab Number:** L1403530
Project Number: 115058 **Report Date:** 02/25/14

REFERENCES

1 Test Methods for Evaluating Solid Waste: Physical/Chemical Methods. EPA SW-846. Third Edition. Updates I - IV, 2007.

97 EPA Test Methods (SW-846) with QC Requirements & Performance Standards for the Analysis of EPA SW-846 Methods under the Massachusetts Contingency Plan, WSC-CAM-IIA, IIB, IIIA, IIIB, IIIC, IIID, VA, VB, VC, VIA, VIB, VIIIA and VIIIB, July 2010.

LIMITATION OF LIABILITIES

Alpha Analytical performs services with reasonable care and diligence normal to the analytical testing laboratory industry. In the event of an error, the sole and exclusive responsibility of Alpha Analytical shall be to re-perform the work at it's own expense. In no event shall Alpha Analytical be held liable for any incidental, consequential or special damages, including but not limited to, damages in any way connected with the use of, interpretation of, information or analysis provided by Alpha Analytical.

We strongly urge our clients to comply with EPA protocol regarding sample volume, preservation, cooling, containers, sampling procedures, holding time and splitting of samples in the field.

Certification Information

Last revised December 11, 2013

The following analytes are not included in our NELAP Scope of Accreditation:

Westborough Facility
EPA 524.2: Acetone, 2-Butanone (Methyl ethyl ketone (MEK)), Tert-butyl alcohol, 2-Hexanone, Tetrahydrofuran, 1,3,5-Trichlorobenzene, 4-Methyl-2-pentanone (MIBK), Carbon disulfide, Diethyl ether.
EPA 8260C: 1,2,4,5-Tetramethylbenzene, 4-Ethyltoluene, Iodomethane (methyl iodide), Methyl methacrylate, Azobenzene.
EPA 8330A/B: PETN, Picric Acid, Nitroglycerine, 2,6-DANT, 2,4-DANT.
EPA 8270D: 1-Methylnaphthalene, Dimethylnaphthalene,1,4-Diphenylhydrazine.
EPA 625: 4-Chloroaniline, 4-Methylphenol.
SM4500: Soil: Total Phosphorus, TKN, NO2, NO3.
EPA 9071: Total Petroleum Hydrocarbons, Oil & Grease.

Mansfield Facility
EPA 8270D: Biphenyl.
EPA TO-15: Halothane, 2,4,4-Trimethyl-2-pentene, 2,4,4-Trimethyl-1-pentene, Thiophene, 2-Methylthiophene, 3-Methylthiophene, 2-Ethylthiophene, 1,2,3-Trimethylbenzene, Indan, Indene, 1,2,4,5-Tetramethylbenzene, Benzothiophene, 1-Methylnaphthalene.

The following analytes are included in our Massachusetts DEP Scope of Accreditation, Westborough Facility:

Drinking Water
EPA 200.8: Sb,As,Ba,Be,Cd,Cr,Cu,Pb,Ni,Se,Tl; **EPA 200.7**: Ba,Be,Ca,Cd,Cr,Cu,Na; **EPA 245.1:** Mercury;
EPA 300.0: Nitrate-N, Fluoride, Sulfate; **EPA 353.2**: Nitrate-N, Nitrite-N; **SM4500NO3-F**: Nitrate-N, Nitrite-N; **SM4500F-C, SM4500CN-CE, EPA 180.1, SM2130B, SM4500Cl-D, SM2320B, SM2540C, SM4500H-B**
EPA 332: Perchlorate.
Microbiology: **SM9215B; SM9223-P/A, SM9223B-Colilert-QT, Enterolert-QT.**

Non-Potable Water
EPA 200.8: Al,Sb,As,Be,Cd,Cr,Cu,Pb,Mn,Ni,Se,Ag,Tl,Zn;
EPA 200.7: Al,Sb,As,Be,Cd,Ca,Cr,Co,Cu,Fe,Pb,Mg,Mn,Mo,Ni,K,Se,Ag,Na,Sr,Ti,Tl,V,Zn;
EPA 245.1, SM4500H,B, EPA 120.1, SM2510B, SM2540C, SM2340B, SM2320B, SM4500CL-E, SM4500F-BC, SM426C, SM4500NH3-BH, **EPA 350.1**: Ammonia-N, **LACHAT 10-107-06-1-B**: Ammonia-N, **SM4500NO3-F,**
EPA 353.2: Nitrate-N**, SM4500NH3-BC-NES, EPA 351.1, SM4500P-E, SM4500P-B, E, SM5220D, EPA 410.4, SM5210B, SM5310C, SM4500CL-D, EPA 1664, SM14 510AC, EPA 420.1, SM4500-CN-CE, SM2540D.**
EPA 624: Volatile Halocarbons & Aromatics,
EPA 608: Chlordane, Toxaphene, Aldrin, alpha-BHC, beta-BHC, gamma-BHC, delta-BHC, Dieldrin, DDD, DDE, DDT, Endosulfan I, Endosulfan II, Endosulfan sulfate, Endrin, Endrin Aldehyde, Heptachlor, Heptachlor Epoxide, PCBs
EPA 625: SVOC (Acid/Base/Neutral Extractables), **EPA 600/4-81-045**: PCB-Oil.
Microbiology: **SM9223B-Colilert-QT; Enterolert-QT, SM9222D-MF**.

For a complete listing of analytes and methods, please contact your Alpha Project Manager.

CHAIN OF CUSTODY

PAGE 1 OF 1

Date Rec'd in Lab: 2/14/14

ALPHA Job #: L1403530

ALPHA ANALYTICAL World Class Chemistry
8 Walkup Drive, Westboro, MA 01581, Tel: 508-898-9220
320 Forbes Blvd, Mansfield, MA 02048, Tel: 508-822-9300

Client Information

Client: TRC
Address: 650 Suffolk St. Lowell, MA 01854
Phone: 978-970-5600
Email: aleonard@trcsolutions.com dsullivan

Project Information

Project Name: NBHS IRA PSWS
Project Location: New Bedford, MA
Project #: 115058
Project Manager: David Sullivan
ALPHA Quote #:

Turn-Around Time

☒ Standard ☐ RUSH (only confirmed if pre-approved!)
Date Due: 2/25/14

Report Information - Data Deliverables

☐ ADEx ☒ EMAIL

Billing Information

☐ Same as Client info PO #: P115058

Regulatory Requirements & Project Information Requirements

☒ Yes ☐ No MA MCP Analytical Methods ☐ Yes ☐ No CT RCP Analytical Methods
☐ Yes ☐ No Matrix Spike Required on this SDG? (Required for MCP Inorganics)
☐ Yes ☐ No GW1 Standards (Info Required for Metals & EPH with Targets)
☐ Yes ☐ No NPDES RGP
☐ Other State /Fed Program MA Criteria MCP

Additional Project Information:
★ PCB + TPH filtered by LAB using 0.2 µm filter.
– TPH detection limit to be < 200 ppb

ANALYSIS: VOC: ☒ 8260 ☐ 624 ☐ 524.2; SVOC: ☐ ABN ☐ PAH; METALS: ☐ MCP 13 ☐ MCP 14 ☐ RCP 15; METALS: ☐ RCRA5 ☐ RCRA8 ☐ PP13; EPH: ☐ Ranges & Targets ☐ Ranges Only; VPH: ☐ Ranges & Targets ☐ Ranges Only; ☐ PCB ☐ PEST; TPH: ☒ Quant Only ☐ Fingerprint; ★PCB (0.2µm lab filtered); ★TPH (0.2µm lab filtered); ★PCB (0.45 field filtered)

SAMPLE INFO: Filtration ☒ Field ☒ Lab to do; Preservation ☐ Lab to do

ALPHA Lab ID (Lab Use Only)	Sample ID	Collection Date	Collection Time	Sample Matrix	Sampler Initials	VOC	SVOC	METALS	METALS	EPH	VPH	PCB	TPH	★PCB (0.2µm lab filtered)	★TPH (0.2µm lab filtered)	★PCB (0.45 field filtered)				Sample Comments	Total # Bottles
03530-02 .01	Influent	2/14/14	0800	I	KDJ	X						X	X	X	X						11
-03 .02	Effluent	2/14/14	0810	E	KDJ	X						X									5
-04,05,06 .03	MW-27R	2/14/14	0955	GW	KDJ	X						X		X		X					9
-07,08,09 .04	MW-42R	2/14/14	1050	GW	KDJ	X						X		X		X					9
-10 .05	Trip Blank	2/11/14				X															1
Container Type						√						A	A	A	A	A					
Preservative						B						A	A	A	A	A					

Container Type
P= Plastic
A= Amber glass
V= Vial
G= Glass
B= Bacteria cup
C= Cube
O= Other
E= Encore
D= BOD Bottle

Preservative
A= None
B= HCl
C= HNO_3
D= H_2SO_4
E= NaOH
F= MeOH
G= $NaHSO_4$
H = $Na_2S_2O_3$
I= Ascorbic Acid
J = NH_4Cl
K= Zn Acetate
O= Other

Relinquished By:	Date/Time	Received By:	Date/Time
[signature]	2/14/14 15:40	[signature]	2/14/14 15:40
[signature]	2/14/14 17:45	[signature]	2/14/14 17:45

All samples submitted are subject to Alpha's Terms and Conditions. See reverse side.

FORM NO: 01-01 (rev. 12-Mar-2012)

CHAIN OF CUSTODY

PAGE 1 OF 1

Date Rec'd in Lab: 2/14/14

ALPHA Job #: L1403530

ALPHA ANALYTICAL — World Class Chemistry
8 Walkup Drive, Westboro, MA 01581, Tel: 508-898-9220
320 Forbes Blvd, Mansfield, MA 02048, Tel: 508-822-9300

Client Information

Client: TRC
Address: 650 Suffolk St. Lowell, MA 01854
Phone: 978-970-5600
Email: aleonard@trcsolutions.com dsullivan

Project Information

Project Name: NBHS IRA PSWS
Project Location: New Bedford, MA
Project #: 115058
Project Manager: David Sullivan
ALPHA Quote #:

Turn-Around Time

☒ Standard ☐ RUSH (only confirmed if pre-approved)
Date Due: 2/25/14

Report Information - Data Deliverables

☐ ADEx ☒ EMAIL

Billing Information

☐ Same as Client info PO #: P115058

Regulatory Requirements & Project Information Requirements

☒ Yes ☐ No MA MCP Analytical Methods ☐ Yes ☐ No CT RCP Analytical Methods
☐ Yes ☐ No Matrix Spike Required on this SDG? (Required for MCP Inorganics)
☐ Yes ☐ No GW1 Standards (Info Required for Metals & EPH with Targets)
☐ Yes ☐ No NPDES RGP
☐ Other State /Fed Program MA Criteria MCP

Additional Project Information:
★ PCB + TPH filtered by LAB using 0.2 µm filter.
– TPH detection limit to be < 200 ppb

ALPHA Lab ID (Lab Use Only)	Sample ID	Collection Date	Collection Time	Sample Matrix	Sampler Initials	VOC: ☒ 8260 ☐ 624 ☐ 524.2	SVOC: ☐ ABN ☐ PAH	METALS: ☐ MCP 13 ☐ MCP 14 ☐ RCP 15	METALS: ☐ RCRA5 ☐ RCRA8 ☐ PP13	EPH: ☐ Ranges & Targets ☐ Ranges Only	VPH: ☐ Ranges & Targets ☐ Ranges Only	☒ PCB ☐ PEST	TPH: ☒ Quant Only ☐ Fingerprint	★ PCB (0.2 µm lab filtered)	★ TPH (0.2 µm lab filtered)	★ PCB (0.45 field filtered)				Sample Comments	TOTAL # BOTTLES
03530.01	Influent	2/14/14	0800	I	KDJ	X						X	X	X	X						11
.02	Effluent	2/14/14	0810	E	KDJ	X						X									5
.03	MW-27R	2/14/14	0955	GW	KDJ	X						X		X		X					9
.04	MW-42R	2/14/14	1050	GW	KDJ	X						X		X		X					9
.05	Trip Blank	2/11/14				X															1
	Container Type					√						A	A	A	A	A					
	Preservative					B						A	A	A	A	A					

Container Type: P= Plastic, A= Amber glass, V= Vial, G= Glass, B= Bacteria cup, C= Cube, O= Other, E= Encore, D= BOD Bottle

Preservative: A= None, B= HCl, C= HNO_3, D= H_2SO_4, E= NaOH, F= MeOH, G= $NaHSO_4$, H= $Na_2S_2O_3$, I= Ascorbic Acid, J= NH_4Cl, K= Zn Acetate, O= Other

Relinquished By:	Date/Time	Received By:	Date/Time
[signature]	2/14/14 15:40	[signature]	2/14/14 15:40
[signature]	2/14/14 17:45	[signature]	2/14/14 17:45

All samples submitted are subject to Alpha's Terms and Conditions. See reverse side.

FORM NO: 01-01 (rev. 12-Mar-2012)

7A
CONTINUING CALIBRATION CHECK

Lab Name: Alpha Analytical Labs

SDG No.: L1403530

Instrument ID: Jack.i Calibration Date: 17-FEB-2014 Time: 05:26

Lab File ID: 0217A02 Init. Calib. Date(s): 28-JAN-2 28-JAN-2

Sample No: 8260 CCAL Init. Calib. Times : 06:41 09:56

Compound	RRF	RRF	MIN RRF	%D	MAX %D	
dichlorodifluoromethane	.68809	.54578	.1	-21	20	F
chloromethane	.83456	.74043	.1	-11	20	
vinyl chloride	.85555	.79941	.1	-7	20	
bromomethane	.34826	.3607	.1	4	20	
chloroethane	.48234	.45674	.1	-5	20	
trichlorofluoromethane	.97126	.98745	.1	2	20	
ethyl ether	.26649	.26064	.05	-2	20	
1,1,-dichloroethene	.64223	.65073	.1	1	20	
carbon disulfide	1.6759	1.5868	.1	-5	20	
freon-113	.678	.69449	.1	2	20	
iodomethane	100	60.852	.05	-39	20	F
acrolein	.0752	.05467	.05	-27	20	F
methylene chloride	.68862	.7181	.1	4	20	
acetone	100	86.526	.1	-13	20	
trans-1,2-dichloroethene	.69832	.70945	.1	2	20	
methyl acetate	.27728	.26358	.1	-5	20	
methyl tert butyl ether	1.1426	1.0876	.1	-5	20	
tert butyl alcohol	.0326	.03348	.05	3	20	F
Diisopropyl Ether	1.8030	1.6793	.01	-7	20	
1,1-dichloroethane	1.2979	1.3065	.2	1	20	
acrylonitrile	.15507	.14412	.05	-7	20	
Halothane	.56525	.6074	.05	7	20	
Ethyl-Tert-Butyl-Ether	1.5918	1.5084	.05	-5	20	
vinyl acetate	.91542	.82704	.05	-10	20	
cis-1,2-dichloroethene	.78607	.79786	.1	2	20	
2,2-dichloropropane	1.0107	1.0718	.05	6	20	
cyclohexane	1.3134	1.2472	.01	-5	30	
bromochloromethane	.35916	.39361	.05	10	20	
chloroform	1.1580	1.2392	.2	7	20	
carbontetrachloride	.93521	.99014	.1	6	20	
tetrahydrofuran	.12775	.11848	.05	-7	20	
ethyl acetate	.34464	.30651	.05	-11	20	
1,1,1-trichloroethane	1.0357	1.1065	.1	7	20	
1,1-dichloropropene	.85865	.85733	.05	0	20	
2-butanone	100	75.538	.1	-24	20	F
benzene	2.7058	2.6341	.5	-3	20	
Tertiary-Amyl Methyl Ether	1.2470	1.2313	.05	-1	20	
1,2-dichloroethane	.71159	.74676	.1	5	20	

FORM VII MCP-8260-10

7A
CONTINUING CALIBRATION CHECK

Lab Name: Alpha Analytical Labs

SDG No.: L1403530

Instrument ID: Jack.i Calibration Date: 17-FEB-2014 Time: 05:26

Lab File ID: 0217A02 Init. Calib. Date(s): 28-JAN-2 28-JAN-2

Sample No: 8260 CCAL Init. Calib. Times : 06:41 09:56

Compound	$\overline{RRF}$	RRF	MIN RRF	%D	MAX %D	
methyl cyclohexane	1.0107	1.0024	.01	-1	30	
trichloroethene	.62544	.64775	.2	4	20	
dibromomethane	.33993	.35051	.05	3	20	
1,2-dichloropropane	.6601	.6321	.1	-4	20	
bromodichloromethane	.80171	.81782	.2	2	20	
1,4-dioxane	.00359	.00358	.05	0	20	F
2-chloroethylvinyl ether	.12324	.11085	.05	-10	20	
cis-1,3-dichloropropene	.93496	.92228	.2	-1	20	
toluene	1.9649	1.8714	.4	-5	20	
tetrachloroethene	.87034	.88968	.2	2	20	
4-methyl-2-pentanone	.1333	.137	.1	3	20	
trans-1,3-dichloropropene	.81539	.74053	.1	-9	20	
1,1,2-trichloroethane	.39093	.35669	.1	-9	20	
ethyl-methacrylate	.61006	.59554	.01	-2	30	
chlorodibromomethane	.63417	.58731	.1	-7	20	
1,3-dichloropropane	.84179	.76491	.05	-9	20	
1,2-dibromoethane	.50574	.4573	.1	-10	20	
2-hexanone	.27167	.25316	.1	-7	20	
chlorobenzene	2.1898	2.1633	.5	-1	20	
ethyl benzene	3.6442	3.5643	.1	-2	20	
1,1,1,2-tetrachloroethane	.68885	.6756	.05	-2	20	
p/m xylene	1.5009	1.4866	.1	-1	20	
o xylene	1.3966	1.3786	.3	-1	20	
bromoform	.62885	.59437	.1	-5	20	
styrene	2.2981	2.2839	.3	-1	20	
isopropylbenzene	6.2026	6.0176	.1	-3	20	
bromobenzene	1.6289	1.6239	.05	0	20	
n-propylbenzene	6.3111	6.1189	.05	-3	20	
1,4-dichlorobutane	1.4932	1.3722	.01	-8	20	
1,1,2,2,-tetrachloroethane	.95129	.874	.3	-8	20	
4-ethyltoluene	6.0834	6.0144	.05	-1	20	
2-chlorotoluene	4.5252	4.3711	.05	-3	20	
1,2,3-trichloropropane	.77817	.67512	.05	-13	20	
1,3,5-trimethybenzene	4.8192	4.7576	.05	-1	20	
trans-1,4-dichloro-2-butene	.28451	.23776	.05	-16	20	
4-chorotoluene	4.1397	3.9898	.05	-4	20	
tert-butylbenzene	4.0962	4.0880	.05	0	20	
1,2,4-trimethylbenzene	4.6989	4.5117	.05	-4	20	

FORM VII MCP-8260-10

7A
CONTINUING CALIBRATION CHECK

Lab Name: Alpha Analytical Labs

SDG No.: L1403530

Instrument ID: Jack.i Calibration Date: 17-FEB-2014 Time: 05:26

Lab File ID: 0217A02 Init. Calib. Date(s): 28-JAN-2 28-JAN-2

Sample No: 8260 CCAL Init. Calib. Times : 06:41 09:56

Compound	RRF	RRF	MIN RRF	%D	MAX %D
sec-butylbenzene	5.4069	5.3521	.01	-1	20
p-isopropyltoluene	4.7274	4.7352	.05	0	20
1,3-dichlorobenzene	2.9383	2.8877	.6	-2	20
1,4-dichlorobenzene	2.9961	2.9176	.5	-3	20
p-diethylbenzene	2.5820	2.5612	.05	-1	20
n-butylbenzene	3.3062	3.2990	.05	0	20
1,2-dichlorobenzene	2.7033	2.6325	.4	-3	20
1,2,4,5-tetramethylbenzene	3.8719	3.7990	.05	-2	20
1,2-dibromo-3-chloropropane	.15841	.14371	.05	-9	20
1,3,5-trichlorobenzene	.85673	.98393	.05	15	20
1,2,4-trichlorobenzene	1.3919	1.3305	.2	-4	20
hexachlorobutadiene	.47174	.50758	.05	8	20
naphthalene	3.1906	2.9652	.05	-7	20
1,2,3-trichlorobenzene	1.1414	1.1014	.05	-3	20
dibromofluoromethane	.27629	.28596	.05	4	20
1,2-dichloroethane-d4	.25087	.24754	.05	-1	20
toluene-d8	1.1588	1.0832	.01	-7	20
4-bromofluorobenzene	.81372	.78389	.05	-4	20

FORM VII MCP-8260-10

ANALYTICAL REPORT

Lab Number:	L1405536
Client:	TRC Environmental Consultants Wannalancit Mills 650 Suffolk Street Lowell, MA 01854
ATTN:	David Sullivan
Phone:	(978) 656-3565
Project Name:	NBHS IRA O+M
Project Number:	115058
Report Date:	03/24/14

The original project report/data package is held by Alpha Analytical. This report/data package is paginated and should be reproduced only in its entirety. Alpha Analytical holds no responsibility for results and/or data that are not consistent with the original.

Certifications & Approvals: MA (M-MA086), NY (11148), CT (PH-0574), NH (2003), NJ NELAP (MA935), RI (LAO00065), ME (MA00086), PA (68-03671), USDA (Permit #P-330-11-00240), NC (666), TX (T104704476), DOD (L2217), US Army Corps of Engineers.

Eight Walkup Drive, Westborough, MA 01581-1019
508-898-9220 (Fax) 508-898-9193 800-624-9220 - www.alphalab.com

Project Name: NBHS IRA O+M
Project Number: 115058

Lab Number: L1405536
Report Date: 03/24/14

Alpha Sample ID	Client ID	Sample Location	Collection Date/Time
L1405536-01	INFLUENT	NEW BEDFORD, MA	03/17/14 12:00
L1405536-02	INTRA-CARBON	NEW BEDFORD, MA	03/17/14 12:15
L1405536-03	EFFLUENT	NEW BEDFORD, MA	03/17/14 12:30
L1405536-04	TRIP BLANK	NEW BEDFORD, MA	03/17/14 00:00
L1405536-05	INFLUENT-FILTERED	NEW BEDFORD, MA	03/17/14 12:00

Project Name: NBHS IRA O+M **Lab Number:** L1405536

Project Number: 115058 **Report Date:** 03/24/14

MADEP MCP Response Action Analytical Report Certification

This form provides certifications for all samples performed by MCP methods. Please refer to the Sample Results and Container Information sections of this report for specification of MCP methods used for each analysis. The following questions pertain only to MCP Analytical Methods.

An affirmative response to questions A through F is required for "Presumptive Certainty" status		
A	Were all samples received in a condition consistent with those described on the Chain-of-Custody, properly preserved (including temperature) in the field or laboratory, and prepared/analyzed within method holding times?	YES
B	Were the analytical method(s) and all associated QC requirements specified in the selected CAM protocol(s) followed?	YES
C	Were all required corrective actions and analytical response actions specified in the selected CAM protocol(s) implemented for all identified performance standard non-conformances?	YES
D	Does the laboratory report comply with all the reporting requirements specified in CAM VII A, "Quality Assurance and Quality Control Guidelines for the Acquisition and Reporting of Analytical Data?"	YES
E a.	VPH, EPH, and APH Methods only: Was each method conducted without significant modification(s)? (Refer to the individual method(s) for a list of significant modifications).	N/A
E b.	APH and TO-15 Methods only: Was the complete analyte list reported for each method?	N/A
F	Were all applicable CAM protocol QC and performance standard non-conformances identified and evaluated in a laboratory narrative (including all "No" responses to Questions A through E)?	YES

A response to questions G, H and I is required for "Presumptive Certainty" status		
G	Were the reporting limits at or below all CAM reporting limits specified in the selected CAM protocol(s)?	NO
H	Were all QC performance standards specified in the CAM protocol(s) achieved?	NO
I	Were results reported for the complete analyte list specified in the selected CAM protocol(s)?	YES

For any questions answered "No", please refer to the case narrative section on the following page(s).

Please note that sample matrix information is located in the Sample Results section of this report.

Project Name: NBHS IRA O+M
Project Number: 115058
Lab Number: L1405536
Report Date: 03/24/14

Case Narrative

The samples were received in accordance with the Chain of Custody and no significant deviations were encountered during the preparation or analysis unless otherwise noted. Sample Receipt, Container Information, and the Chain of Custody are located at the back of the report.

Results contained within this report relate only to the samples submitted under this Alpha Lab Number and meet all of the requirements of NELAC, for all NELAC accredited parameters. The data presented in this report is organized by parameter (i.e. VOC, SVOC, etc.). Sample specific Quality Control data (i.e. Surrogate Spike Recovery) is reported at the end of the target analyte list for each individual sample, followed by the Laboratory Batch Quality Control at the end of each parameter. If a sample was re-analyzed or re-extracted due to a required quality control corrective action and if both sets of data are reported, the Laboratory ID of the re-analysis or re-extraction is designated with an "R" or "RE", respectively. When multiple Batch Quality Control elements are reported (e.g. more than one LCS), the associated samples for each element are noted in the grey shaded header line of each data table. Any Laboratory Batch, Sample Specific % recovery or RPD value that is outside the listed Acceptance Criteria is bolded in the report. Performance criteria for CAM and RCP methods allow for some LCS compound failures to occur and still be within method compliance. In these instances, the specific failures are not narrated but are noted in the associated QC table. This information is also incorporated in the Data Usability format for our Data Merger tool where it can be reviewed along with any associated usability implications. Soil/sediments, solids and tissues are reported on a dry weight basis unless otherwise noted. Definitions of all data qualifiers and acronyms used in this report are provided in the Glossary located at the back of the report.

In reference to questions H (CAM) or 4 (RCP) when "NO" is checked, the performance criteria for CAM and RCP methods allow for some quality control failures to occur and still be within method compliance. In these instances the specific failure is not narrated but noted in the associated QC table. The information is also incorporated in the Data Usability format of our Data Merger tool where it can be reviewed along with any associated usability implications.

Please see the associated ADEx data file for a comparison of laboratory reporting limits that were achieved with the regulatory Numerical Standards requested on the Chain of Custody.

HOLD POLICY
For samples submitted on hold, Alpha's policy is to hold samples (with the exception of Air canisters) free of charge for 21 calendar days from the date the project is completed. After 21 calendar days, we will dispose of all samples submitted including those put on hold unless you have contacted your Client Service Representative and made arrangements for Alpha to continue to hold the samples. Air canisters will be disposed after 3 business days from the date the project is completed.

Please contact Client Services at 800-624-9220 with any questions.

Project Name: NBHS IRA O+M **Lab Number:** L1405536
Project Number: 115058 **Report Date:** 03/24/14

Case Narrative (continued)

MCP Related Narratives

Volatile Organics

In reference to question H:

The WG676730-1/-2 LCS/LCSD RPD, associated with L1405536-01 and -04, is above the 20% acceptance criteria for acetone (21%).

The initial calibration, associated with L1405536-01 and -04, did not meet the method required minimum response factor on the lowest calibration standard for 1,4-dioxane (0.00318), as well as the average response factor for 1,4-dioxane.

The continuing calibration standard, associated with L1405536-01 and -04, is outside the acceptance criteria for several compounds; however, it is within overall method allowances. A copy of the continuing calibration standard is included as an addendum to this report.

PCBs

L1405536-01 has elevated detection limits due to the dilution required by the elevated concentrations of target compounds in the sample.

In reference to question G:

L1405536-01: The requested CAM reporting limits were not achieved on any of the target analytes.

In reference to question H:

The surrogate recoveries for L1405536-01 are below the 30-150% acceptance criteria for 2,4,5,6-tetrachloro-m-xylene and decachlorobiphenyl (all 0%) due to the dilution required to quantitate the sample. Re-extraction was not required; therefore, the results of the original analysis are reported.

I, the undersigned, attest under the pains and penalties of perjury that, to the best of my knowledge and belief and based upon my personal inquiry of those responsible for providing the information contained in this analytical report, such information is accurate and complete. This certificate of analysis is not complete unless this page accompanies any and all pages of this report.

Authorized Signature: Kelly Stenstrom

Title: Technical Director/Representative Date: 03/24/14

ORGANICS

VOLATILES

Project Name: NBHS IRA O+M **Lab Number:** L1405536

Project Number: 115058 **Report Date:** 03/24/14

SAMPLE RESULTS

Lab ID:	L1405536-01	Date Collected:	03/17/14 12:00
Client ID:	INFLUENT	Date Received:	03/17/14
Sample Location:	NEW BEDFORD, MA	Field Prep:	Not Specified
Matrix:	Water		
Analytical Method:	97,8260C		
Analytical Date:	03/20/14 11:08		
Analyst:	MM		

Parameter	Result	Qualifier	Units	RL	MDL	Dilution Factor
MCP Volatile Organics - Westborough Lab						
Methylene chloride	ND		ug/l	2.0	--	1
1,1-Dichloroethane	ND		ug/l	1.0	--	1
Chloroform	ND		ug/l	1.0	--	1
Carbon tetrachloride	ND		ug/l	1.0	--	1
1,2-Dichloropropane	ND		ug/l	1.0	--	1
Dibromochloromethane	ND		ug/l	1.0	--	1
1,1,2-Trichloroethane	ND		ug/l	1.0	--	1
Tetrachloroethene	ND		ug/l	1.0	--	1
Chlorobenzene	ND		ug/l	1.0	--	1
Trichlorofluoromethane	ND		ug/l	2.0	--	1
1,2-Dichloroethane	ND		ug/l	1.0	--	1
1,1,1-Trichloroethane	ND		ug/l	1.0	--	1
Bromodichloromethane	ND		ug/l	1.0	--	1
trans-1,3-Dichloropropene	ND		ug/l	0.50	--	1
cis-1,3-Dichloropropene	ND		ug/l	0.50	--	1
1,1-Dichloropropene	ND		ug/l	2.0	--	1
Bromoform	ND		ug/l	2.0	--	1
1,1,2,2-Tetrachloroethane	ND		ug/l	1.0	--	1
Benzene	ND		ug/l	0.50	--	1
Toluene	ND		ug/l	1.0	--	1
Ethylbenzene	ND		ug/l	1.0	--	1
Chloromethane	ND		ug/l	2.0	--	1
Bromomethane	ND		ug/l	2.0	--	1
Vinyl chloride	6.8		ug/l	1.0	--	1
Chloroethane	ND		ug/l	2.0	--	1
1,1-Dichloroethene	ND		ug/l	1.0	--	1
trans-1,2-Dichloroethene	11		ug/l	1.0	--	1
Trichloroethene	5.3		ug/l	1.0	--	1
1,2-Dichlorobenzene	ND		ug/l	1.0	--	1
1,3-Dichlorobenzene	1.1		ug/l	1.0	--	1
1,4-Dichlorobenzene	3.8		ug/l	1.0	--	1

Project Name: NBHS IRA O+M **Lab Number:** L1405536

Project Number: 115058 **Report Date:** 03/24/14

SAMPLE RESULTS

Lab ID: L1405536-01 Date Collected: 03/17/14 12:00

Client ID: INFLUENT Date Received: 03/17/14

Sample Location: NEW BEDFORD, MA Field Prep: Not Specified

Parameter	Result	Qualifier	Units	RL	MDL	Dilution Factor
MCP Volatile Organics - Westborough Lab						
Methyl tert butyl ether	ND		ug/l	2.0	--	1
p/m-Xylene	ND		ug/l	2.0	--	1
o-Xylene	ND		ug/l	1.0	--	1
cis-1,2-Dichloroethene	39		ug/l	1.0	--	1
Dibromomethane	ND		ug/l	2.0	--	1
1,2,3-Trichloropropane	ND		ug/l	2.0	--	1
Styrene	ND		ug/l	1.0	--	1
Dichlorodifluoromethane	ND		ug/l	2.0	--	1
Acetone	ND		ug/l	5.0	--	1
Carbon disulfide	ND		ug/l	2.0	--	1
2-Butanone	ND		ug/l	5.0	--	1
4-Methyl-2-pentanone	ND		ug/l	5.0	--	1
2-Hexanone	ND		ug/l	5.0	--	1
Bromochloromethane	ND		ug/l	2.0	--	1
Tetrahydrofuran	ND		ug/l	2.0	--	1
2,2-Dichloropropane	ND		ug/l	2.0	--	1
1,2-Dibromoethane	ND		ug/l	2.0	--	1
1,3-Dichloropropane	ND		ug/l	2.0	--	1
1,1,1,2-Tetrachloroethane	ND		ug/l	1.0	--	1
Bromobenzene	ND		ug/l	2.0	--	1
n-Butylbenzene	ND		ug/l	2.0	--	1
sec-Butylbenzene	ND		ug/l	2.0	--	1
tert-Butylbenzene	ND		ug/l	2.0	--	1
o-Chlorotoluene	ND		ug/l	2.0	--	1
p-Chlorotoluene	ND		ug/l	2.0	--	1
1,2-Dibromo-3-chloropropane	ND		ug/l	2.0	--	1
Hexachlorobutadiene	ND		ug/l	0.60	--	1
Isopropylbenzene	ND		ug/l	2.0	--	1
p-Isopropyltoluene	ND		ug/l	2.0	--	1
Naphthalene	ND		ug/l	2.0	--	1
n-Propylbenzene	ND		ug/l	2.0	--	1
1,2,3-Trichlorobenzene	ND		ug/l	2.0	--	1
1,2,4-Trichlorobenzene	3.0		ug/l	2.0	--	1
1,3,5-Trimethylbenzene	ND		ug/l	2.0	--	1
1,2,4-Trimethylbenzene	ND		ug/l	2.0	--	1
Ethyl ether	ND		ug/l	2.0	--	1
Isopropyl Ether	ND		ug/l	2.0	--	1
Ethyl-Tert-Butyl-Ether	ND		ug/l	2.0	--	1
Tertiary-Amyl Methyl Ether	ND		ug/l	2.0	--	1

Project Name: NBHS IRA O+M **Lab Number:** L1405536

Project Number: 115058 **Report Date:** 03/24/14

SAMPLE RESULTS

Lab ID:	L1405536-01	Date Collected:	03/17/14 12:00
Client ID:	INFLUENT	Date Received:	03/17/14
Sample Location:	NEW BEDFORD, MA	Field Prep:	Not Specified

Parameter	Result	Qualifier	Units	RL	MDL	Dilution Factor
MCP Volatile Organics - Westborough Lab						
1,4-Dioxane	ND		ug/l	250	--	1

Surrogate	% Recovery	Qualifier	Acceptance Criteria
1,2-Dichloroethane-d4	97		70-130
Toluene-d8	99		70-130
4-Bromofluorobenzene	105		70-130
Dibromofluoromethane	97		70-130

Project Name: NBHS IRA O+M **Lab Number:** L1405536

Project Number: 115058 **Report Date:** 03/24/14

SAMPLE RESULTS

Lab ID:	L1405536-04	Date Collected:	03/17/14 00:00
Client ID:	TRIP BLANK	Date Received:	03/17/14
Sample Location:	NEW BEDFORD, MA	Field Prep:	Not Specified
Matrix:	Water		
Analytical Method:	97,8260C		
Analytical Date:	03/20/14 09:30		
Analyst:	MM		

Parameter	Result	Qualifier	Units	RL	MDL	Dilution Factor
MCP Volatile Organics - Westborough Lab						
Methylene chloride	ND		ug/l	2.0	--	1
1,1-Dichloroethane	ND		ug/l	1.0	--	1
Chloroform	ND		ug/l	1.0	--	1
Carbon tetrachloride	ND		ug/l	1.0	--	1
1,2-Dichloropropane	ND		ug/l	1.0	--	1
Dibromochloromethane	ND		ug/l	1.0	--	1
1,1,2-Trichloroethane	ND		ug/l	1.0	--	1
Tetrachloroethene	ND		ug/l	1.0	--	1
Chlorobenzene	ND		ug/l	1.0	--	1
Trichlorofluoromethane	ND		ug/l	2.0	--	1
1,2-Dichloroethane	ND		ug/l	1.0	--	1
1,1,1-Trichloroethane	ND		ug/l	1.0	--	1
Bromodichloromethane	ND		ug/l	1.0	--	1
trans-1,3-Dichloropropene	ND		ug/l	0.50	--	1
cis-1,3-Dichloropropene	ND		ug/l	0.50	--	1
1,1-Dichloropropene	ND		ug/l	2.0	--	1
Bromoform	ND		ug/l	2.0	--	1
1,1,2,2-Tetrachloroethane	ND		ug/l	1.0	--	1
Benzene	ND		ug/l	0.50	--	1
Toluene	ND		ug/l	1.0	--	1
Ethylbenzene	ND		ug/l	1.0	--	1
Chloromethane	ND		ug/l	2.0	--	1
Bromomethane	ND		ug/l	2.0	--	1
Vinyl chloride	ND		ug/l	1.0	--	1
Chloroethane	ND		ug/l	2.0	--	1
1,1-Dichloroethene	ND		ug/l	1.0	--	1
trans-1,2-Dichloroethene	ND		ug/l	1.0	--	1
Trichloroethene	ND		ug/l	1.0	--	1
1,2-Dichlorobenzene	ND		ug/l	1.0	--	1
1,3-Dichlorobenzene	ND		ug/l	1.0	--	1
1,4-Dichlorobenzene	ND		ug/l	1.0	--	1

Project Name: NBHS IRA O+M **Lab Number:** L1405536

Project Number: 115058 **Report Date:** 03/24/14

SAMPLE RESULTS

Lab ID: L1405536-04 Date Collected: 03/17/14 00:00

Client ID: TRIP BLANK Date Received: 03/17/14

Sample Location: NEW BEDFORD, MA Field Prep: Not Specified

Parameter	Result	Qualifier	Units	RL	MDL	Dilution Factor
MCP Volatile Organics - Westborough Lab						
Methyl tert butyl ether	ND		ug/l	2.0	--	1
p/m-Xylene	ND		ug/l	2.0	--	1
o-Xylene	ND		ug/l	1.0	--	1
cis-1,2-Dichloroethene	ND		ug/l	1.0	--	1
Dibromomethane	ND		ug/l	2.0	--	1
1,2,3-Trichloropropane	ND		ug/l	2.0	--	1
Styrene	ND		ug/l	1.0	--	1
Dichlorodifluoromethane	ND		ug/l	2.0	--	1
Acetone	ND		ug/l	5.0	--	1
Carbon disulfide	ND		ug/l	2.0	--	1
2-Butanone	ND		ug/l	5.0	--	1
4-Methyl-2-pentanone	ND		ug/l	5.0	--	1
2-Hexanone	ND		ug/l	5.0	--	1
Bromochloromethane	ND		ug/l	2.0	--	1
Tetrahydrofuran	ND		ug/l	2.0	--	1
2,2-Dichloropropane	ND		ug/l	2.0	--	1
1,2-Dibromoethane	ND		ug/l	2.0	--	1
1,3-Dichloropropane	ND		ug/l	2.0	--	1
1,1,1,2-Tetrachloroethane	ND		ug/l	1.0	--	1
Bromobenzene	ND		ug/l	2.0	--	1
n-Butylbenzene	ND		ug/l	2.0	--	1
sec-Butylbenzene	ND		ug/l	2.0	--	1
tert-Butylbenzene	ND		ug/l	2.0	--	1
o-Chlorotoluene	ND		ug/l	2.0	--	1
p-Chlorotoluene	ND		ug/l	2.0	--	1
1,2-Dibromo-3-chloropropane	ND		ug/l	2.0	--	1
Hexachlorobutadiene	ND		ug/l	0.60	--	1
Isopropylbenzene	ND		ug/l	2.0	--	1
p-Isopropyltoluene	ND		ug/l	2.0	--	1
Naphthalene	ND		ug/l	2.0	--	1
n-Propylbenzene	ND		ug/l	2.0	--	1
1,2,3-Trichlorobenzene	ND		ug/l	2.0	--	1
1,2,4-Trichlorobenzene	ND		ug/l	2.0	--	1
1,3,5-Trimethylbenzene	ND		ug/l	2.0	--	1
1,2,4-Trimethylbenzene	ND		ug/l	2.0	--	1
Ethyl ether	ND		ug/l	2.0	--	1
Isopropyl Ether	ND		ug/l	2.0	--	1
Ethyl-Tert-Butyl-Ether	ND		ug/l	2.0	--	1
Tertiary-Amyl Methyl Ether	ND		ug/l	2.0	--	1

Project Name: NBHS IRA O+M **Lab Number:** L1405536

Project Number: 115058 **Report Date:** 03/24/14

SAMPLE RESULTS

Lab ID:	L1405536-04	Date Collected:	03/17/14 00:00
Client ID:	TRIP BLANK	Date Received:	03/17/14
Sample Location:	NEW BEDFORD, MA	Field Prep:	Not Specified

Parameter	Result	Qualifier	Units	RL	MDL	Dilution Factor
MCP Volatile Organics - Westborough Lab						
1,4-Dioxane	ND		ug/l	250	--	1

Surrogate	% Recovery	Qualifier	Acceptance Criteria
1,2-Dichloroethane-d4	97		70-130
Toluene-d8	95		70-130
4-Bromofluorobenzene	95		70-130
Dibromofluoromethane	100		70-130

Project Name: NBHS IRA O+M **Lab Number:** L1405536

Project Number: 115058 **Report Date:** 03/24/14

Method Blank Analysis
Batch Quality Control

Analytical Method: 97,8260C
Analytical Date: 03/20/14 08:25
Analyst: MM

Parameter	Result	Qualifier	Units	RL	MDL
MCP Volatile Organics - Westborough Lab for sample(s): 01,04 Batch: WG676730-3					
Methylene chloride	ND		ug/l	2.0	--
1,1-Dichloroethane	ND		ug/l	1.0	--
Chloroform	ND		ug/l	1.0	--
Carbon tetrachloride	ND		ug/l	1.0	--
1,2-Dichloropropane	ND		ug/l	1.0	--
Dibromochloromethane	ND		ug/l	1.0	--
1,1,2-Trichloroethane	ND		ug/l	1.0	--
Tetrachloroethene	ND		ug/l	1.0	--
Chlorobenzene	ND		ug/l	1.0	--
Trichlorofluoromethane	ND		ug/l	2.0	--
1,2-Dichloroethane	ND		ug/l	1.0	--
1,1,1-Trichloroethane	ND		ug/l	1.0	--
Bromodichloromethane	ND		ug/l	1.0	--
trans-1,3-Dichloropropene	ND		ug/l	0.50	--
cis-1,3-Dichloropropene	ND		ug/l	0.50	--
1,1-Dichloropropene	ND		ug/l	2.0	--
Bromoform	ND		ug/l	2.0	--
1,1,2,2-Tetrachloroethane	ND		ug/l	1.0	--
Benzene	ND		ug/l	0.50	--
Toluene	ND		ug/l	1.0	--
Ethylbenzene	ND		ug/l	1.0	--
Chloromethane	ND		ug/l	2.0	--
Bromomethane	ND		ug/l	2.0	--
Vinyl chloride	ND		ug/l	1.0	--
Chloroethane	ND		ug/l	2.0	--
1,1-Dichloroethene	ND		ug/l	1.0	--
trans-1,2-Dichloroethene	ND		ug/l	1.0	--
Trichloroethene	ND		ug/l	1.0	--
1,2-Dichlorobenzene	ND		ug/l	1.0	--
1,3-Dichlorobenzene	ND		ug/l	1.0	--
1,4-Dichlorobenzene	ND		ug/l	1.0	--

Project Name: NBHS IRA O+M **Lab Number:** L1405536

Project Number: 115058 **Report Date:** 03/24/14

Method Blank Analysis
Batch Quality Control

Analytical Method: 97,8260C
Analytical Date: 03/20/14 08:25
Analyst: MM

Parameter	Result	Qualifier	Units	RL	MDL
MCP Volatile Organics - Westborough Lab for sample(s): 01,04 Batch: WG676730-3					
Methyl tert butyl ether	ND		ug/l	2.0	--
p/m-Xylene	ND		ug/l	2.0	--
o-Xylene	ND		ug/l	1.0	--
cis-1,2-Dichloroethene	ND		ug/l	1.0	--
Dibromomethane	ND		ug/l	2.0	--
1,2,3-Trichloropropane	ND		ug/l	2.0	--
Styrene	ND		ug/l	1.0	--
Dichlorodifluoromethane	ND		ug/l	2.0	--
Acetone	ND		ug/l	5.0	--
Carbon disulfide	ND		ug/l	2.0	--
2-Butanone	ND		ug/l	5.0	--
4-Methyl-2-pentanone	ND		ug/l	5.0	--
2-Hexanone	ND		ug/l	5.0	--
Bromochloromethane	ND		ug/l	2.0	--
Tetrahydrofuran	ND		ug/l	2.0	--
2,2-Dichloropropane	ND		ug/l	2.0	--
1,2-Dibromoethane	ND		ug/l	2.0	--
1,3-Dichloropropane	ND		ug/l	2.0	--
1,1,1,2-Tetrachloroethane	ND		ug/l	1.0	--
Bromobenzene	ND		ug/l	2.0	--
n-Butylbenzene	ND		ug/l	2.0	--
sec-Butylbenzene	ND		ug/l	2.0	--
tert-Butylbenzene	ND		ug/l	2.0	--
o-Chlorotoluene	ND		ug/l	2.0	--
p-Chlorotoluene	ND		ug/l	2.0	--
1,2-Dibromo-3-chloropropane	ND		ug/l	2.0	--
Hexachlorobutadiene	ND		ug/l	0.60	--
Isopropylbenzene	ND		ug/l	2.0	--
p-Isopropyltoluene	ND		ug/l	2.0	--
Naphthalene	ND		ug/l	2.0	--
n-Propylbenzene	ND		ug/l	2.0	--

Project Name: NBHS IRA O+M
Project Number: 115058

Lab Number: L1405536
Report Date: 03/24/14

Method Blank Analysis
Batch Quality Control

Analytical Method: 97,8260C
Analytical Date: 03/20/14 08:25
Analyst: MM

Parameter	Result	Qualifier	Units	RL	MDL
MCP Volatile Organics - Westborough Lab for sample(s): 01,04 Batch: WG676730-3					
1,2,3-Trichlorobenzene	ND		ug/l	2.0	--
1,2,4-Trichlorobenzene	ND		ug/l	2.0	--
1,3,5-Trimethylbenzene	ND		ug/l	2.0	--
1,2,4-Trimethylbenzene	ND		ug/l	2.0	--
Ethyl ether	ND		ug/l	2.0	--
Isopropyl Ether	ND		ug/l	2.0	--
Ethyl-Tert-Butyl-Ether	ND		ug/l	2.0	--
Tertiary-Amyl Methyl Ether	ND		ug/l	2.0	--
1,4-Dioxane	ND		ug/l	250	--

Surrogate	%Recovery	Qualifier	Acceptance Criteria
1,2-Dichloroethane-d4	99		70-130
Toluene-d8	92		70-130
4-Bromofluorobenzene	102		70-130
Dibromofluoromethane	100		70-130

Lab Control Sample Analysis
Batch Quality Control

Project Name: NBHS IRA O+M
Project Number: 115058

Lab Number: L1405536
Report Date: 03/24/14

Parameter	LCS %Recovery	Qual	LCSD %Recovery	Qual	%Recovery Limits	RPD	Qual	RPD Limits
MCP Volatile Organics - Westborough Lab Associated sample(s): 01,04 Batch: WG676730-1 WG676730-2								
Methylene chloride	104		106		70-130	2		20
1,1-Dichloroethane	99		100		70-130	1		20
Chloroform	103		104		70-130	1		20
Carbon tetrachloride	101		104		70-130	3		20
1,2-Dichloropropane	96		96		70-130	0		20
Dibromochloromethane	102		97		70-130	5		20
1,1,2-Trichloroethane	98		96		70-130	2		20
Tetrachloroethene	96		97		70-130	1		20
Chlorobenzene	98		96		70-130	2		20
Trichlorofluoromethane	105		103		70-130	2		20
1,2-Dichloroethane	98		96		70-130	2		20
1,1,1-Trichloroethane	103		102		70-130	1		20
Bromodichloromethane	105		104		70-130	1		20
trans-1,3-Dichloropropene	98		94		70-130	4		20
cis-1,3-Dichloropropene	101		101		70-130	0		20
1,1-Dichloropropene	102		101		70-130	1		20
Bromoform	94		95		70-130	1		20
1,1,2,2-Tetrachloroethane	95		96		70-130	1		20
Benzene	98		99		70-130	1		20
Toluene	97		97		70-130	0		20
Ethylbenzene	96		98		70-130	2		20

Lab Control Sample Analysis
Batch Quality Control

Project Name: NBHS IRA O+M
Project Number: 115058

Lab Number: L1405536
Report Date: 03/24/14

Parameter	LCS %Recovery	Qual	LCSD %Recovery	Qual	%Recovery Limits	RPD	Qual	RPD Limits
MCP Volatile Organics - Westborough Lab Associated sample(s): 01,04 Batch: WG676730-1 WG676730-2								
Chloromethane	83		81		70-130	2		20
Bromomethane	104		99		70-130	5		20
Vinyl chloride	94		94		70-130	0		20
Chloroethane	103		104		70-130	1		20
1,1-Dichloroethene	104		108		70-130	4		20
trans-1,2-Dichloroethene	106		106		70-130	0		20
Trichloroethene	101		98		70-130	3		20
1,2-Dichlorobenzene	98		96		70-130	2		20
1,3-Dichlorobenzene	95		95		70-130	0		20
1,4-Dichlorobenzene	97		99		70-130	2		20
Methyl tert butyl ether	105		103		70-130	2		20
p/m-Xylene	97		98		70-130	1		20
o-Xylene	95		95		70-130	0		20
cis-1,2-Dichloroethene	100		99		70-130	1		20
Dibromomethane	103		102		70-130	1		20
1,2,3-Trichloropropane	93		99		70-130	6		20
Styrene	109		115		70-130	5		20
Dichlorodifluoromethane	76		75		70-130	1		20
Acetone	123		100		70-130	**21**	Q	20
Carbon disulfide	100		101		70-130	1		20
2-Butanone	95		95		70-130	0		20

Lab Control Sample Analysis
Batch Quality Control

Project Name: NBHS IRA O+M
Project Number: 115058

Lab Number: L1405536
Report Date: 03/24/14

Parameter	LCS %Recovery	Qual	LCSD %Recovery	Qual	%Recovery Limits	RPD	Qual	RPD Limits
MCP Volatile Organics - Westborough Lab Associated sample(s): 01,04 Batch: WG676730-1 WG676730-2								
4-Methyl-2-pentanone	106		98		70-130	8		20
2-Hexanone	96		97		70-130	1		20
Bromochloromethane	102		103		70-130	1		20
Tetrahydrofuran	96		90		70-130	6		20
2,2-Dichloropropane	106		102		70-130	4		20
1,2-Dibromoethane	100		96		70-130	4		20
1,3-Dichloropropane	98		94		70-130	4		20
1,1,1,2-Tetrachloroethane	97		98		70-130	1		20
Bromobenzene	100		96		70-130	4		20
n-Butylbenzene	97		98		70-130	1		20
sec-Butylbenzene	96		97		70-130	1		20
tert-Butylbenzene	97		96		70-130	1		20
o-Chlorotoluene	96		97		70-130	1		20
p-Chlorotoluene	97		98		70-130	1		20
1,2-Dibromo-3-chloropropane	101		100		70-130	1		20
Hexachlorobutadiene	102		103		70-130	1		20
Isopropylbenzene	98		99		70-130	1		20
p-Isopropyltoluene	98		97		70-130	1		20
Naphthalene	99		102		70-130	3		20
n-Propylbenzene	96		97		70-130	1		20
1,2,3-Trichlorobenzene	103		103		70-130	0		20

Lab Control Sample Analysis
Batch Quality Control

Project Name: NBHS IRA O+M
Project Number: 115058

Lab Number: L1405536
Report Date: 03/24/14

Parameter	LCS %Recovery	Qual	LCSD %Recovery	Qual	%Recovery Limits	RPD	Qual	RPD Limits
MCP Volatile Organics - Westborough Lab Associated sample(s): 01,04 Batch: WG676730-1 WG676730-2								
1,2,4-Trichlorobenzene	104		101		70-130	3		20
1,3,5-Trimethylbenzene	97		97		70-130	0		20
1,2,4-Trimethylbenzene	98		98		70-130	0		20
Ethyl ether	101		100		70-130	1		20
Isopropyl Ether	95		94		70-130	1		20
Ethyl-Tert-Butyl-Ether	100		98		70-130	2		20
Tertiary-Amyl Methyl Ether	101		100		70-130	1		20
1,4-Dioxane	122		113		70-130	8		20

Surrogate	LCS %Recovery	Qual	LCSD %Recovery	Qual	Acceptance Criteria
1,2-Dichloroethane-d4	100		98		70-130
Toluene-d8	98		96		70-130
4-Bromofluorobenzene	97		100		70-130
Dibromofluoromethane	101		103		70-130

PCBS

Project Name: NBHS IRA O+M **Lab Number:** L1405536

Project Number: 115058 **Report Date:** 03/24/14

SAMPLE RESULTS

Lab ID:	L1405536-01 D	Date Collected:	03/17/14 12:00
Client ID:	INFLUENT	Date Received:	03/17/14
Sample Location:	NEW BEDFORD, MA	Field Prep:	Not Specified
Matrix:	Water	Extraction Method:	EPA 3510C
Analytical Method:	97,8082	Extraction Date:	03/19/14 04:27
Analytical Date:	03/20/14 15:48	Cleanup Method1:	EPA 3665A
Analyst:	JW	Cleanup Date1:	03/20/14
		Cleanup Method2:	EPA 3660B
		Cleanup Date2:	03/20/14

Parameter	Result	Qualifier	Units	RL	MDL	Dilution Factor	Column
MCP Polychlorinated Biphenyls - Westborough Lab							
Aroclor 1016	ND		ug/l	2.50	--	10	A
Aroclor 1221	ND		ug/l	2.50	--	10	A
Aroclor 1232	ND		ug/l	2.50	--	10	A
Aroclor 1242	6.52		ug/l	2.50	--	10	A
Aroclor 1248	ND		ug/l	2.50	--	10	A
Aroclor 1254	30.7		ug/l	2.50	--	10	B
Aroclor 1260	ND		ug/l	2.50	--	10	A
Aroclor 1262	ND		ug/l	2.50	--	10	A
Aroclor 1268	ND		ug/l	2.50	--	10	A

Surrogate	% Recovery	Qualifier	Acceptance Criteria	Column
2,4,5,6-Tetrachloro-m-xylene	**0**	Q	30-150	A
Decachlorobiphenyl	**0**	Q	30-150	A
2,4,5,6-Tetrachloro-m-xylene	**0**	Q	30-150	B
Decachlorobiphenyl	**0**	Q	30-150	B

Project Name: NBHS IRA O+M

Project Number: 115058

Lab Number: L1405536

Report Date: 03/24/14

SAMPLE RESULTS

Lab ID:	L1405536-03	Date Collected:	03/17/14 12:30
Client ID:	EFFLUENT	Date Received:	03/17/14
Sample Location:	NEW BEDFORD, MA	Field Prep:	Not Specified
Matrix:	Water	Extraction Method:	EPA 3510C
Analytical Method:	97,8082	Extraction Date:	03/19/14 04:27
Analytical Date:	03/20/14 14:43	Cleanup Method1:	EPA 3665A
Analyst:	JW	Cleanup Date1:	03/20/14
		Cleanup Method2:	EPA 3660B
		Cleanup Date2:	03/20/14

Parameter	Result	Qualifier	Units	RL	MDL	Dilution Factor	Column
MCP Polychlorinated Biphenyls - Westborough Lab							
Aroclor 1016	ND		ug/l	0.250	--	1	A
Aroclor 1221	ND		ug/l	0.250	--	1	A
Aroclor 1232	ND		ug/l	0.250	--	1	A
Aroclor 1242	ND		ug/l	0.250	--	1	A
Aroclor 1248	ND		ug/l	0.250	--	1	A
Aroclor 1254	ND		ug/l	0.250	--	1	A
Aroclor 1260	ND		ug/l	0.250	--	1	A
Aroclor 1262	ND		ug/l	0.250	--	1	A
Aroclor 1268	ND		ug/l	0.250	--	1	A

Surrogate	% Recovery	Qualifier	Acceptance Criteria	Column
2,4,5,6-Tetrachloro-m-xylene	63		30-150	A
Decachlorobiphenyl	63		30-150	A
2,4,5,6-Tetrachloro-m-xylene	64		30-150	B
Decachlorobiphenyl	73		30-150	B

Project Name: NBHS IRA O+M **Lab Number:** L1405536

Project Number: 115058 **Report Date:** 03/24/14

SAMPLE RESULTS

Lab ID:	L1405536-05	Date Collected:	03/17/14 12:00
Client ID:	INFLUENT-FILTERED	Date Received:	03/17/14
Sample Location:	NEW BEDFORD, MA	Field Prep:	Not Specified
Matrix:	Water	Extraction Method:	EPA 3510C
Analytical Method:	97,8082	Extraction Date:	03/20/14 06:28
Analytical Date:	03/21/14 15:30	Cleanup Method1:	EPA 3665A
Analyst:	JW	Cleanup Date1:	03/20/14
		Cleanup Method2:	EPA 3660B
		Cleanup Date2:	03/20/14

Parameter	Result	Qualifier	Units	RL	MDL	Dilution Factor	Column
MCP Polychlorinated Biphenyls - Westborough Lab							
Aroclor 1016	ND		ug/l	0.260	--	1	A
Aroclor 1221	ND		ug/l	0.260	--	1	A
Aroclor 1232	ND		ug/l	0.260	--	1	A
Aroclor 1242	ND		ug/l	0.260	--	1	A
Aroclor 1248	ND		ug/l	0.260	--	1	A
Aroclor 1254	ND		ug/l	0.260	--	1	A
Aroclor 1260	ND		ug/l	0.260	--	1	A
Aroclor 1262	ND		ug/l	0.260	--	1	A
Aroclor 1268	ND		ug/l	0.260	--	1	A

Surrogate	% Recovery	Qualifier	Acceptance Criteria	Column
2,4,5,6-Tetrachloro-m-xylene	79		30-150	A
Decachlorobiphenyl	82		30-150	A
2,4,5,6-Tetrachloro-m-xylene	81		30-150	B
Decachlorobiphenyl	78		30-150	B

Project Name: NBHS IRA O+M

Project Number: 115058

Lab Number: L1405536

Report Date: 03/24/14

Method Blank Analysis
Batch Quality Control

Analytical Method: 97,8082
Analytical Date: 03/20/14 16:31
Analyst: JW

Extraction Method: EPA 3510C
Extraction Date: 03/19/14 04:27
Cleanup Method1: EPA 3665A
Cleanup Date1: 03/20/14
Cleanup Method2: EPA 3660B
Cleanup Date2: 03/20/14

Parameter	Result	Qualifier	Units	RL	MDL	Column
MCP Polychlorinated Biphenyls - Westborough Lab for sample(s): 01-03 Batch: WG676377-1						
Aroclor 1016	ND		ug/l	0.250	--	A
Aroclor 1221	ND		ug/l	0.250	--	A
Aroclor 1232	ND		ug/l	0.250	--	A
Aroclor 1242	ND		ug/l	0.250	--	A
Aroclor 1248	ND		ug/l	0.250	--	A
Aroclor 1254	ND		ug/l	0.250	--	A
Aroclor 1260	ND		ug/l	0.250	--	A
Aroclor 1262	ND		ug/l	0.250	--	A
Aroclor 1268	ND		ug/l	0.250	--	A

Surrogate	%Recovery	Qualifier	Acceptance Criteria	Column
2,4,5,6-Tetrachloro-m-xylene	59		30-150	A
Decachlorobiphenyl	62		30-150	A
2,4,5,6-Tetrachloro-m-xylene	61		30-150	B
Decachlorobiphenyl	73		30-150	B

Project Name: NBHS IRA O+M

Project Number: 115058

Lab Number: L1405536

Report Date: 03/24/14

Method Blank Analysis
Batch Quality Control

Analytical Method: 97,8082
Analytical Date: 03/21/14 15:43
Analyst: JW

Extraction Method: EPA 3510C
Extraction Date: 03/20/14 06:28
Cleanup Method1: EPA 3665A
Cleanup Date1: 03/20/14
Cleanup Method2: EPA 3660B
Cleanup Date2: 03/20/14

Parameter	Result	Qualifier	Units	RL	MDL	Column
MCP Polychlorinated Biphenyls - Westborough Lab for sample(s): 05 Batch: WG676658-1						
Aroclor 1016	ND		ug/l	0.250	--	A
Aroclor 1221	ND		ug/l	0.250	--	A
Aroclor 1232	ND		ug/l	0.250	--	A
Aroclor 1242	ND		ug/l	0.250	--	A
Aroclor 1248	ND		ug/l	0.250	--	A
Aroclor 1254	ND		ug/l	0.250	--	A
Aroclor 1260	ND		ug/l	0.250	--	A
Aroclor 1262	ND		ug/l	0.250	--	A
Aroclor 1268	ND		ug/l	0.250	--	A

Surrogate	%Recovery	Qualifier	Acceptance Criteria	Column
2,4,5,6-Tetrachloro-m-xylene	69		30-150	A
Decachlorobiphenyl	79		30-150	A
2,4,5,6-Tetrachloro-m-xylene	71		30-150	B
Decachlorobiphenyl	76		30-150	B

Lab Control Sample Analysis
Batch Quality Control

Project Name: NBHS IRA O+M
Project Number: 115058

Lab Number: L1405536
Report Date: 03/24/14

Parameter	LCS %Recovery	Qual	LCSD %Recovery	Qual	%Recovery Limits	RPD	Qual	RPD Limits	Column
MCP Polychlorinated Biphenyls - Westborough Lab Associated sample(s): 01-03 Batch: WG676377-2 WG676377-3									
Aroclor 1016	80		80		40-140	0		20	A
Aroclor 1260	87		89		40-140	2		20	A

Surrogate	LCS %Recovery	Qual	LCSD %Recovery	Qual	Acceptance Criteria	Column
2,4,5,6-Tetrachloro-m-xylene	66		69		30-150	A
Decachlorobiphenyl	65		61		30-150	A
2,4,5,6-Tetrachloro-m-xylene	71		73		30-150	B
Decachlorobiphenyl	90		87		30-150	B

Lab Control Sample Analysis

Batch Quality Control

Project Name: NBHS IRA O+M

Project Number: 115058

Lab Number: L1405536

Report Date: 03/24/14

Parameter	LCS %Recovery	Qual	LCSD %Recovery	Qual	%Recovery Limits	RPD	Qual	RPD Limits	Column
MCP Polychlorinated Biphenyls - Westborough Lab Associated sample(s): 05 Batch: WG676658-2 WG676658-3									
Aroclor 1016	77		69		40-140	11		20	A
Aroclor 1260	75		70		40-140	6		20	A

Surrogate	LCS %Recovery	Qual	LCSD %Recovery	Qual	Acceptance Criteria	Column
2,4,5,6-Tetrachloro-m-xylene	77		66		30-150	A
Decachlorobiphenyl	66		71		30-150	A
2,4,5,6-Tetrachloro-m-xylene	79		65		30-150	B
Decachlorobiphenyl	63		66		30-150	B

Project Name: NBHS IRA O+M
Project Number: 115058

Lab Number: L1405536
Report Date: 03/24/14

Sample Receipt and Container Information

Were project specific reporting limits specified? YES

Reagent H2O Preserved Vials Frozen on: NA

Cooler Information Custody Seal

Cooler	
A	Absent

Container Information

Container ID	Container Type	Cooler	pH	Temp deg C	Pres	Seal	Analysis(*)
L1405536-01A	Vial HCl preserved	A	N/A	3.1	Y	Absent	MCP-8260-10(14)
L1405536-01B	Vial HCl preserved	A	N/A	3.1	Y	Absent	MCP-8260-10(14)
L1405536-01C	Vial HCl preserved	A	N/A	3.1	Y	Absent	MCP-8260-10(14)
L1405536-01E	Amber 1000ml unpreserved	A	7	3.1	Y	Absent	MCP-8082-10(365)
L1405536-02D	Amber 1000ml unpreserved	A	7	3.1	Y	Absent	MCP-8082-10(365),HOLD(14)
L1405536-02E	Amber 1000ml unpreserved	A	7	3.1	Y	Absent	MCP-8082-10(365),HOLD(14)
L1405536-03A	Vial HCl preserved	A	N/A	3.1	Y	Absent	HOLD-8260(14)
L1405536-03A1	Vial HCl preserved	A	N/A	3.1	Y	Absent	HOLD-8260(14)
L1405536-03B	Vial HCl preserved	A	N/A	3.1	Y	Absent	HOLD-8260(14)
L1405536-03B1	Vial HCl preserved	A	N/A	3.1	Y	Absent	HOLD-8260(14)
L1405536-03C	Vial HCl preserved	A	N/A	3.1	Y	Absent	HOLD-8260(14)
L1405536-03C1	Vial HCl preserved	A	N/A	3.1	Y	Absent	HOLD-8260(14)
L1405536-03D	Amber 1000ml unpreserved	A	7	3.1	Y	Absent	MCP-8082-10(365)
L1405536-03E	Amber 1000ml unpreserved	A	7	3.1	Y	Absent	MCP-8082-10(365)
L1405536-04A	Vial HCl preserved	A	N/A	3.1	Y	Absent	MCP-8260-10(14)
L1405536-05A	Amber 1000ml unpreserved	A	7	3.1	Y	Absent	FILTER-EXT(1)
L1405536-05X	Amber 1000ml unpreserved split	A	7	3.1	Y	Absent	MCP-8082-10(365)

Container Comments

L1405536-05X

*Values in parentheses indicate holding time in days

Project Name:	NBHS IRA O+M	**Lab Number:**	L1405536
Project Number:	115058	**Report Date:**	03/24/14

GLOSSARY

Acronyms

EDL	- Estimated Detection Limit: This value represents the level to which target analyte concentrations are reported as estimated values, when those target analyte concentrations are quantified below the reporting limit (RL). The EDL includes any adjustments from dilutions, concentrations or moisture content, where applicable. The use of EDLs is specific to the analysis of PAHs using Solid-Phase Microextraction (SPME).
EPA	- Environmental Protection Agency.
LCS	- Laboratory Control Sample: A sample matrix, free from the analytes of interest, spiked with verified known amounts of analytes or a material containing known and verified amounts of analytes.
LCSD	- Laboratory Control Sample Duplicate: Refer to LCS.
LFB	- Laboratory Fortified Blank: A sample matrix, free from the analytes of interest, spiked with verified known amounts of analytes or a material containing known and verified amounts of analytes.
MDL	- Method Detection Limit: This value represents the level to which target analyte concentrations are reported as estimated values, when those target analyte concentrations are quantified below the reporting limit (RL). The MDL includes any adjustments from dilutions, concentrations or moisture content, where applicable.
MS	- Matrix Spike Sample: A sample prepared by adding a known mass of target analyte to a specified amount of matrix sample for which an independent estimate of target analyte concentration is available.
MSD	- Matrix Spike Sample Duplicate: Refer to MS.
NA	- Not Applicable.
NC	- Not Calculated: Term is utilized when one or more of the results utilized in the calculation are non-detect at the parameter's reporting unit.
NI	- Not Ignitable.
RL	- Reporting Limit: The value at which an instrument can accurately measure an analyte at a specific concentration. The RL includes any adjustments from dilutions, concentrations or moisture content, where applicable.
RPD	- Relative Percent Difference: The results from matrix and/or matrix spike duplicates are primarily designed to assess the precision of analytical results in a given matrix and are expressed as relative percent difference (RPD). Values which are less than five times the reporting limit for any individual parameter are evaluated by utilizing the absolute difference between the values; although the RPD value will be provided in the report.
SRM	- Standard Reference Material: A reference sample of a known or certified value that is of the same or similar matrix as the associated field samples.

Footnotes

1	- The reference for this analyte should be considered modified since this analyte is absent from the target analyte list of the original method.

Terms

Analytical Method: Both the document from which the method originates and the analytical reference method. (Example: EPA 8260B is shown as 1,8260B.) The codes for the reference method documents are provided in the References section of the Addendum.

Data Qualifiers

A	- Spectra identified as "Aldol Condensation Product".
B	- The analyte was detected above the reporting limit in the associated method blank. Flag only applies to associated field samples that have detectable concentrations of the analyte at less than ten times (10x) the concentration found in the blank. For MCP-related projects, flag only applies to associated field samples that have detectable concentrations of the analyte at less than ten times (10x) the concentration found in the blank. For DOD-related projects, flag only applies to associated field samples that have detectable concentrations of the analyte at less than ten times (10x) the concentration found in the blank AND the analyte was detected above one-half the reporting limit (or above the reporting limit for common lab contaminants) in the associated method blank. For NJ-Air-related projects, flag only applies to associated field samples that have detectable concentrations of the analyte above the reporting limit.
C	- Co-elution: The target analyte co-elutes with a known lab standard (i.e. surrogate, internal standards, etc.) for co-extracted analyses.
D	- Concentration of analyte was quantified from diluted analysis. Flag only applies to field samples that have detectable concentrations of the analyte.
E	- Concentration of analyte exceeds the range of the calibration curve and/or linear range of the instrument.
G	- The concentration may be biased high due to matrix interferences (i.e, co-elution) with non-target compound(s). The result should be considered estimated.
H	- The analysis of pH was performed beyond the regulatory-required holding time of 15 minutes from the time of sample collection.
I	- The lower value for the two columns has been reported due to obvious interference.

Report Format: Data Usability Report

Project Name:	NBHS IRA O+M	**Lab Number:**	L1405536
Project Number:	115058	**Report Date:**	03/24/14

Data Qualifiers

M - Reporting Limit (RL) exceeds the MCP CAM Reporting Limit for this analyte.

NJ - Presumptive evidence of compound. This represents an estimated concentration for Tentatively Identified Compounds (TICs), where the identification is based on a mass spectral library search.

P - The RPD between the results for the two columns exceeds the method-specified criteria.

Q - The quality control sample exceeds the associated acceptance criteria. For DOD-related projects, LCS and/or Continuing Calibration Standard exceedences are also qualified on all associated sample results. Note: This flag is not applicable for matrix spike recoveries when the sample concentration is greater than 4x the spike added or for batch duplicate RPD when the sample concentrations are less than 5x the RL. (Metals only.)

R - Analytical results are from sample re-analysis.

RE - Analytical results are from sample re-extraction.

S - Analytical results are from modified screening analysis.

J - Estimated value. This represents an estimated concentration for Tentatively Identified Compounds (TICs).

ND - Not detected at the reporting limit (RL) for the sample.

Report Format: Data Usability Report

REFERENCES

97 EPA Test Methods (SW-846) with QC Requirements & Performance Standards for the Analysis of EPA SW-846 Methods under the Massachusetts Contingency Plan, WSC-CAM-IIA, IIB, IIIA, IIIB, IIIC, IIID, VA, VB, VC, VIA, VIB, VIIIA and VIIIB, July 2010.

LIMITATION OF LIABILITIES

Alpha Analytical performs services with reasonable care and diligence normal to the analytical testing laboratory industry. In the event of an error, the sole and exclusive responsibility of Alpha Analytical shall be to re-perform the work at it's own expense. In no event shall Alpha Analytical be held liable for any incidental, consequential or special damages, including but not limited to, damages in any way connected with the use of, interpretation of, information or analysis provided by Alpha Analytical.

We strongly urge our clients to comply with EPA protocol regarding sample volume, preservation, cooling, containers, sampling procedures, holding time and splitting of samples in the field.

Certification Information

Last revised December 11, 2013

The following analytes are not included in our NELAP Scope of Accreditation:

Westborough Facility
EPA 524.2: Acetone, 2-Butanone (Methyl ethyl ketone (MEK)), Tert-butyl alcohol, 2-Hexanone, Tetrahydrofuran, 1,3,5-Trichlorobenzene, 4-Methyl-2-pentanone (MIBK), Carbon disulfide, Diethyl ether.
EPA 8260C: 1,2,4,5-Tetramethylbenzene, 4-Ethyltoluene, Iodomethane (methyl iodide), Methyl methacrylate, Azobenzene.
EPA 8330A/B: PETN, Picric Acid, Nitroglycerine, 2,6-DANT, 2,4-DANT.
EPA 8270D: 1-Methylnaphthalene, Dimethylnaphthalene,1,4-Diphenylhydrazine.
EPA 625: 4-Chloroaniline, 4-Methylphenol.
SM4500: Soil: Total Phosphorus, TKN, NO2, NO3.
EPA 9071: Total Petroleum Hydrocarbons, Oil & Grease.

Mansfield Facility
EPA 8270D: Biphenyl.
EPA TO-15: Halothane, 2,4,4-Trimethyl-2-pentene, 2,4,4-Trimethyl-1-pentene, Thiophene, 2-Methylthiophene, 3-Methylthiophene, 2-Ethylthiophene, 1,2,3-Trimethylbenzene, Indan, Indene, 1,2,4,5-Tetramethylbenzene, Benzothiophene, 1-Methylnaphthalene.

The following analytes are included in our Massachusetts DEP Scope of Accreditation, Westborough Facility:

Drinking Water
EPA 200.8: Sb,As,Ba,Be,Cd,Cr,Cu,Pb,Ni,Se,Tl; **EPA 200.7**: Ba,Be,Ca,Cd,Cr,Cu,Na; **EPA 245.1:** Mercury;
EPA 300.0: Nitrate-N, Fluoride, Sulfate; **EPA 353.2**: Nitrate-N, Nitrite-N; **SM4500NO3-F**: Nitrate-N, Nitrite-N; **SM4500F-C, SM4500CN-CE, EPA 180.1, SM2130B, SM4500Cl-D, SM2320B, SM2540C, SM4500H-B**
EPA 332: Perchlorate.
Microbiology: **SM9215B; SM9223-P/A, SM9223B-Colilert-QT, Enterolert-QT.**

Non-Potable Water
EPA 200.8: Al,Sb,As,Be,Cd,Cr,Cu,Pb,Mn,Ni,Se,Ag,Tl,Zn;
EPA 200.7: Al,Sb,As,Be,Cd,Ca,Cr,Co,Cu,Fe,Pb,Mg,Mn,Mo,Ni,K,Se,Ag,Na,Sr,Ti,Tl,V,Zn;
EPA 245.1, SM4500H,B, EPA 120.1, SM2510B, SM2540C, SM2340B, SM2320B, SM4500CL-E, SM4500F-BC, SM426C, SM4500NH3-BH, **EPA 350.1**: Ammonia-N, **LACHAT 10-107-06-1-B**: Ammonia-N, **SM4500NO3-F, EPA 353.2**: Nitrate-N**, SM4500NH3-BC-NES, EPA 351.1, SM4500P-E, SM4500P-B, E, SM5220D, EPA 410.4, SM5210B, SM5310C, SM4500CL-D, EPA 1664, SM14 510AC, EPA 420.1, SM4500-CN-CE, SM2540D.**
EPA 624: Volatile Halocarbons & Aromatics,
EPA 608: Chlordane, Toxaphene, Aldrin, alpha-BHC, beta-BHC, gamma-BHC, delta-BHC, Dieldrin, DDD, DDE, DDT, Endosulfan I, Endosulfan II, Endosulfan sulfate, Endrin, Endrin Aldehyde, Heptachlor, Heptachlor Epoxide, PCBs
EPA 625: SVOC (Acid/Base/Neutral Extractables), **EPA 600/4-81-045**: PCB-Oil.
Microbiology: **SM9223B-Colilert-QT; Enterolert-QT, SM9222D-MF**.

For a complete listing of analytes and methods, please contact your Alpha Project Manager.

CHAIN OF CUSTODY

PAGE 1 OF 1

Date Rec'd in Lab: 3/17/14

ALPHA Job #: L1405536

ALPHA ANALYTICAL World Class Chemistry
8 Walkup Drive, Westboro, MA 01581, Tel: 508-898-9220
320 Forbes Blvd, Mansfield, MA 02048, Tel: 508-822-9300

Project Information

Project Name: NBHS IRA O+M
Project Location: NEW BEDFORD MA.
Project #: 115058
Project Manager: DAVID SULLIVAN
ALPHA Quote #:

Client Information

Client: TRC
Address: 650 SUFFOLK ST
LOWELL MA
Phone: 978-970-5600
Email: ALEONARD@TRCSOLUTIONS.COM

Turn-Around Time

☑ Standard ☐ RUSH (only confirmed if pre-approved!)

Date Due: 3/25

Report Information - Data Deliverables

☑ ADEx ☑ EMAIL

Billing Information

☐ Same as Client info PO #: C115058

Regulatory Requirements & Project Information Requirements

☑ Yes ☐ No MA MCP Analytical Methods ☐ Yes ☐ No CT RCP Analytical Methods
☐ Yes ☐ No Matrix Spike Required on this SDG? (Required for MCP Inorganics)
☐ Yes ☐ No GW1 Standards (Info Required for Metals & EPH with Targets)
☐ Yes ☐ No NPDES RGP
☐ Other State /Fed Program ______ Criteria ______

Additional Project Information:

115058 PH 1320 TK 8

ANALYSIS: VOC: ☑ 8260 ☐ 624 ☐ 524.2; SVOC: ☐ ABN ☐ PAH; METALS: ☐ MCP 13 ☐ MCP 14 ☐ RCP 15; METALS: ☐ RCRA5 ☐ RCRA8 ☐ PP13; EPH: ☐ Ranges & Targets ☐ Ranges Only; VPH: ☐ Ranges & Targets ☐ Ranges Only; ☑ PCB ☐ PEST; TPH: ☐ Quant Only ☐ Fingerprint

SAMPLE INFO: Filtration ☐ Field ☐ Lab to do; Preservation ☐ Lab to do

ALPHA Lab ID (Lab Use Only)	Sample ID	Collection Date	Collection Time	Sample Matrix	Sampler Initials	VOC 8260	PCB	Sample Comments	TOTAL # BOTTLES
05536.01	INFLUENT	3/17	12:00	I	JF	✓	✓		5
~~.02~~	~~INTRA-CARBON~~	~~"~~	~~12:15~~	~~X~~	~~JF~~	✓	✓		5
~~.03~~	~~EFFLUENT~~	~~"~~	~~12:30~~	~~E~~	~~JF~~	✓	✓		5
.04	TRIP BLANK	-	-		n/a	✓			1
-05	INFLUENT-FILTERED	"	12:00	I			X	filter through 0.2 micron	

	VOC		PCB
Container Type	V	/	A
Preservative	B		A

Container Type	Preservative
P= Plastic	A= None
A= Amber glass	B= HCl
V= Vial	C= HNO_3
G= Glass	D= H_2SO_4
B= Bacteria cup	E= NaOH
C= Cube	F= MeOH
O= Other	G= $NaHSO_4$
E= Encore	H = $Na_2S_2O_3$
D= BOD Bottle	I= Ascorbic Acid
	J = NH_4Cl
	K= Zn Acetate
	O= Other

Relinquished By:	Date/Time	Received By:	Date/Time
[signature]	3/17/14 15:15	[signature]	3-17-14 1515
	3-17-14 15:15	[signature]	3/17/14 15:15

All samples submitted are subject to Alpha's Terms and Conditions. See reverse side.

FORM NO: 01-01 (rev. 12-Mar-2012)

CHAIN OF CUSTODY

PAGE 1 OF 1

Date Rec'd in Lab: 3/17/14

ALPHA Job #: L1405536

ALPHA ANALYTICAL
World Class Chemistry
8 Walkup Drive, Westboro, MA 01581, Tel: 508-898-9220
320 Forbes Blvd, Mansfield, MA 02048, Tel: 508-822-9300

Client Information

Client: TRC

Address: 650 SUFFOLK ST LOWELL MA

Phone: 978-970-5600

Email: ALEONARD@TRCSOLUTIONS.COM

Project Information

Project Name: NBHS IRA O+M

Project Location: NEW BEDFORD MA.

Project #: 115058

Project Manager: DAVID SULLIVAN

ALPHA Quote #:

Turn-Around Time

☑ Standard ☐ RUSH *(only confirmed if pre-approved!)*

Date Due: 3/25

Report Information - Data Deliverables

☑ ADEx ☑ EMAIL

Billing Information

☐ Same as Client info PO #: C115058

Regulatory Requirements & Project Information Requirements

☑ Yes ☐ No MA MCP Analytical Methods ☐ Yes ☐ No CT RCP Analytical Methods
☐ Yes ☐ No Matrix Spike Required on this SDG? (Required for MCP Inorganics)
☐ Yes ☐ No GW1 Standards (Info Required for Metals & EPH with Targets)
☐ Yes ☐ No NPDES RGP
☐ Other State /Fed Program ____ Criteria ____

Additional Project Information:

115058 PH 1320 TK 8

ANALYSIS: VOC: ☑ 8260 ☐ 624 ☐ 524.2; SVOC: ☐ ABN ☐ PAH; METALS: ☐ MCP 13 ☐ MCP 14 ☐ RCP 15; METALS: ☐ RCRA5 ☐ RCRA8 ☐ PP13; EPH: ☐ Ranges & Targets ☐ Ranges Only; VPH: ☐ Ranges & Targets ☐ Ranges Only; ☑ PCB ☐ PEST; TPH: ☐ Quant Only ☐ Fingerprint

SAMPLE INFO
Filtration ☐ Field ☐ Lab to do
Preservation ☐ Lab to do

ALPHA Lab ID (Lab Use Only)	Sample ID	Collection Date	Collection Time	Sample Matrix	Sampler Initials	VOC	SVOC	METALS	METALS	EPH	VPH	PCB/PEST	TPH							Sample Comments	TOTAL # BOTTLES
05536.01	INFLUENT	3/17	12:00	I	JF	✓						✓									5
.02	INTRA-CARBON	"	12:15	X	JF	✓						✓									5
.03	EFFLUENT	"	12:30	E	JF	✓						✓									5
.04	TRIP BLANK	-	-		N/A	✓															1

	VOC	SVOC	METALS	METALS	EPH	VPH	PCB/PEST
Container Type	V						A
Preservative	B						A

Container Type
P= Plastic
A= Amber glass
V= Vial
G= Glass
B= Bacteria cup
C= Cube
O= Other
E= Encore
D= BOD Bottle

Preservative
A= None
B= HCl
C= HNO_3
D= H_2SO_4
E= NaOH
F= MeOH
G= $NaHSO_4$
H = $Na_2S_2O_3$
I= Ascorbic Acid
J = NH_4Cl
K= Zn Acetate
O= Other

Relinquished By:	Date/Time	Received By:	Date/Time
[signature]	3/17/14 15:15	[signature]	3-17-14 1515
[signature]	3-17-14 15:15	[signature]	3/17/14 15:15

All samples submitted are subject to Alpha's Terms and Conditions. See reverse side.

FORM NO: 01-01 (rev. 12-Mar-2012)

7A
Volatile Organics CONTINUING CALIBRATION CHECK

Lab Name: Alpha Analytical Labs

SDG No.: L1405536

Instrument ID: Jack.i Calibration Date: 20-MAR-2014 Time: 06:47

Lab File ID: 0320A05 Init. Calib. Date(s): 06-MAR-2 06-MAR-2

Sample No: 8260 CCAL Init. Calib. Times : 07:52 13:51

Compound	RRF	RRF	MIN RRF	%D	MAX %D	
dichlorodifluoromethane	.59436	.45005	.1	-24	20	F
chloromethane	1.1336	.93856	.1	-17	20	
vinyl chloride	.92614	.87318	.1	-6	20	
bromomethane	.23458	.24364	.1	4	20	
chloroethane	.49041	.5058	.1	3	20	
trichlorofluoromethane	.81322	.85705	.1	5	20	
ethyl ether	.27632	.2793	.05	1	20	
1,1,-dichloroethene	.49987	.52078	.1	4	20	
carbon disulfide	1.3911	1.3946	.1	0	20	
freon-113	.55867	.58404	.1	5	20	
iodomethane	100	75.020	.05	-25	20	F
acrolein	.10565	.10792	.05	2	20	
methylene chloride	.58704	.60933	.1	4	20	
acetone	100	123	.1	23	20	F
trans-1,2-dichloroethene	.56434	.59904	.1	6	20	
methyl acetate	.42089	.45006	.1	7	20	
methyl tert butyl ether	1.3276	1.3908	.1	5	20	
tert butyl alcohol	.04417	.04983	.05	13	20	F
Diisopropyl Ether	3.2284	3.0757	.01	-5	20	
1,1-dichloroethane	1.4406	1.4221	.2	-1	20	
acrylonitrile	.23504	.2422	.05	3	20	
Halothane	.45961	.45332	.05	-1	20	
Ethyl-Tert-Butyl-Ether	2.5041	2.4909	.05	-1	20	
vinyl acetate	1.8007	1.8036	.05	0	20	
cis-1,2-dichloroethene	.6273	.62579	.1	0	20	
2,2-dichloropropane	.88473	.93963	.05	6	20	
cyclohexane	1.7958	1.6591	.01	-8	30	
bromochloromethane	.28399	.29102	.05	2	20	
chloroform	1.0367	1.0646	.2	3	20	
carbontetrachloride	.77235	.77774	.1	1	20	
tetrahydrofuran	.21607	.20807	.05	-4	20	
ethyl acetate	.6533	.62797	.05	-4	20	
1,1,1-trichloroethane	.89953	.93046	.1	3	20	
1,1-dichloropropene	.86464	.87956	.05	2	20	
2-butanone	.29131	.27667	.1	-5	20	
benzene	2.5723	2.5307	.5	-2	20	
Tertiary-Amyl Methyl Ether	1.4812	1.4935	.05	1	20	
1,2-dichloroethane	.90699	.88647	.1	-2	20	

FORM VII MCP-8260-10

7A
CONTINUING CALIBRATION CHECK

Lab Name: Alpha Analytical Labs

SDG No.: L1405536

Instrument ID: Jack.i Calibration Date: 20-MAR-2014 Time: 06:47

Lab File ID: 0320A05 Init. Calib. Date(s): 06-MAR-2 06-MAR-2

Sample No: 8260 CCAL Init. Calib. Times : 07:52 13:51

Compound	RRF	RRF	MIN RRF	%D	MAX %D	
methyl cyclohexane	.96989	.95174	.01	-2	30	
trichloroethene	.59513	.60064	.2	1	20	
dibromomethane	.30223	.31068	.05	3	20	
1,2-dichloropropane	.83868	.80788	.1	-4	20	
bromodichloromethane	.7528	.7887	.2	5	20	
1,4-dioxane	.00318	.00386	.05	22	20	F
2-chloroethylvinyl ether	.43057	.42346	.05	-2	20	
cis-1,3-dichloropropene	.9535	.96573	.2	1	20	
toluene	2.0071	1.9454	.4	-3	20	
tetrachloroethene	.84549	.80934	.2	-4	20	
4-methyl-2-pentanone	.2332	.24752	.1	6	20	
trans-1,3-dichloropropene	.97579	.96027	.1	-2	20	
1,1,2-trichloroethane	.46572	.4582	.1	-2	20	
ethyl-methacrylate	.81236	.8005	.01	-1	30	
chlorodibromomethane	.65421	.66852	.1	2	20	
1,3-dichloropropane	1.0315	1.0164	.05	-1	20	
1,2-dibromoethane	.57758	.57489	.1	0	20	
2-hexanone	.50561	.48784	.1	-4	20	
chlorobenzene	2.1604	2.1212	.5	-2	20	
ethyl benzene	3.7425	3.5787	.1	-4	20	
1,1,1,2-tetrachloroethane	.73254	.71036	.05	-3	20	
p/m xylene	1.4745	1.4255	.1	-3	20	
o xylene	1.3716	1.3030	.3	-5	20	
bromoform	.67689	.63582	.1	-6	20	
styrene	2.2463	2.4495	.3	9	20	
isopropylbenzene	6.6871	6.5369	.1	-2	20	
bromobenzene	1.6052	1.6047	.05	0	20	
1,4-dichlorobutane	3.0213	2.7827	.01	-8	30	
n-propylbenzene	6.8365	6.5734	.05	-4	20	
1,1,2,2,-tetrachloroethane	1.2072	1.1424	.3	-5	20	
4-ethyltoluene	6.1760	5.8888	.05	-5	20	
2-chlorotoluene	4.8865	4.6900	.05	-4	20	
1,2,3-trichloropropane	1.0222	.95172	.05	-7	20	
1,3,5-trimethybenzene	5.0793	4.9244	.05	-3	20	
trans-1,4-dichloro-2-butene	.51726	.4542	.05	-12	20	
4-chorotoluene	4.4783	4.3367	.05	-3	20	
tert-butylbenzene	4.0882	3.9686	.05	-3	20	
1,2,4-trimethylbenzene	4.9118	4.8176	.05	-2	20	

FORM VII MCP-8260-10

7A
CONTINUING CALIBRATION CHECK

Lab Name: Alpha Analytical Labs

SDG No.: L1405536

Instrument ID: Jack.i Calibration Date: 20-MAR-2014 Time: 06:47

Lab File ID: 0320A05 Init. Calib. Date(s): 06-MAR-2 06-MAR-2

Sample No: 8260 CCAL Init. Calib. Times : 07:52 13:51

Compound	RRF	RRF	MIN RRF	%D	MAX %D
sec-butylbenzene	5.6864	5.4812	.01	-4	20
p-isopropyltoluene	4.5561	4.4726	.05	-2	20
1,3-dichlorobenzene	2.8689	2.7141	.6	-5	20
1,4-dichlorobenzene	2.8509	2.7745	.5	-3	20
p-diethylbenzene	2.5536	2.5289	.05	-1	20
n-butylbenzene	3.4143	3.3210	.05	-3	20
1,2-dichlorobenzene	2.6108	2.5714	.4	-2	20
1,2,4,5-tetramethylbenzene	3.7268	3.6246	.05	-3	20
1,2-dibromo-3-chloropropane	.18901	.19184	.05	1	20
1,3,5-trichlorobenzene	.57248	.61837	.05	8	20
1,2,4-trichlorobenzene	1.1067	1.1541	.2	4	20
hexachlorobutadiene	.37315	.38101	.05	2	20
naphthalene	2.7345	2.7159	.05	-1	20
1,2,3-trichlorobenzene	.90527	.93105	.05	3	20
dibromofluoromethane	.24831	.25005	.05	1	20
1,2-dichloroethane-d4	.32007	.31891	.05	0	20
toluene-d8	1.2595	1.2302	.01	-2	20
4-bromofluorobenzene	.90814	.88256	.05	-3	20

FORM VII MCP-8260-10

ANALYTICAL REPORT

Lab Number:	L1405670
Client:	TRC Environmental Consultants Wannalancit Mills 650 Suffolk Street Lowell, MA 01854
ATTN:	David Sullivan
Phone:	(978) 656-3565
Project Name:	NBHS IRA O+M
Project Number:	115058
Report Date:	03/25/14

The original project report/data package is held by Alpha Analytical. This report/data package is paginated and should be reproduced only in its entirety. Alpha Analytical holds no responsibility for results and/or data that are not consistent with the original.

Certifications & Approvals: MA (M-MA086), NY (11148), CT (PH-0574), NH (2003), NJ NELAP (MA935), RI (LAO00065), ME (MA00086), PA (68-03671), USDA (Permit #P-330-11-00240), NC (666), TX (T104704476), DOD (L2217), US Army Corps of Engineers.

Eight Walkup Drive, Westborough, MA 01581-1019
508-898-9220 (Fax) 508-898-9193 800-624-9220 - www.alphalab.com

Project Name: NBHS IRA O+M
Project Number: 115058

Lab Number: L1405670
Report Date: 03/25/14

Alpha Sample ID	Client ID	Sample Location	Collection Date/Time
L1405670-01	INTRA-CARBON	NBHS NEW BEDFORD MA	03/18/14 12:15
L1405670-02	EFFLUENT	NBHS NEW BEDFORD MA	03/17/14 12:30

Project Name: NBHS IRA O+M **Lab Number:** L1405670

Project Number: 115058 **Report Date:** 03/25/14

MADEP MCP Response Action Analytical Report Certification

This form provides certifications for all samples performed by MCP methods. Please refer to the Sample Results and Container Information sections of this report for specification of MCP methods used for each analysis. The following questions pertain only to MCP Analytical Methods.

An affirmative response to questions A through F is required for "Presumptive Certainty" status		
A	Were all samples received in a condition consistent with those described on the Chain-of-Custody, properly preserved (including temperature) in the field or laboratory, and prepared/analyzed within method holding times?	YES
B	Were the analytical method(s) and all associated QC requirements specified in the selected CAM protocol(s) followed?	YES
C	Were all required corrective actions and analytical response actions specified in the selected CAM protocol(s) implemented for all identified performance standard non-conformances?	YES
D	Does the laboratory report comply with all the reporting requirements specified in CAM VII A, "Quality Assurance and Quality Control Guidelines for the Acquisition and Reporting of Analytical Data?"	YES
E a.	VPH, EPH, and APH Methods only: Was each method conducted without significant modification(s)? (Refer to the individual method(s) for a list of significant modifications).	N/A
E b.	APH and TO-15 Methods only: Was the complete analyte list reported for each method?	N/A
F	Were all applicable CAM protocol QC and performance standard non-conformances identified and evaluated in a laboratory narrative (including all "No" responses to Questions A through E)?	YES

A response to questions G, H and I is required for "Presumptive Certainty" status		
G	Were the reporting limits at or below all CAM reporting limits specified in the selected CAM protocol(s)?	NO
H	Were all QC performance standards specified in the CAM protocol(s) achieved?	NO
I	Were results reported for the complete analyte list specified in the selected CAM protocol(s)?	YES

For any questions answered "No", please refer to the case narrative section on the following page(s).

Please note that sample matrix information is located in the Sample Results section of this report.

Project Name: NBHS IRA O+M
Project Number: 115058

Lab Number: L1405670
Report Date: 03/25/14

Case Narrative

The samples were received in accordance with the Chain of Custody and no significant deviations were encountered during the preparation or analysis unless otherwise noted. Sample Receipt, Container Information, and the Chain of Custody are located at the back of the report.

Results contained within this report relate only to the samples submitted under this Alpha Lab Number and meet all of the requirements of NELAC, for all NELAC accredited parameters. The data presented in this report is organized by parameter (i.e. VOC, SVOC, etc.). Sample specific Quality Control data (i.e. Surrogate Spike Recovery) is reported at the end of the target analyte list for each individual sample, followed by the Laboratory Batch Quality Control at the end of each parameter. If a sample was re-analyzed or re-extracted due to a required quality control corrective action and if both sets of data are reported, the Laboratory ID of the re-analysis or re-extraction is designated with an "R" or "RE", respectively. When multiple Batch Quality Control elements are reported (e.g. more than one LCS), the associated samples for each element are noted in the grey shaded header line of each data table. Any Laboratory Batch, Sample Specific % recovery or RPD value that is outside the listed Acceptance Criteria is bolded in the report. Performance criteria for CAM and RCP methods allow for some LCS compound failures to occur and still be within method compliance. In these instances, the specific failures are not narrated but are noted in the associated QC table. This information is also incorporated in the Data Usability format for our Data Merger tool where it can be reviewed along with any associated usability implications. Soil/sediments, solids and tissues are reported on a dry weight basis unless otherwise noted. Definitions of all data qualifiers and acronyms used in this report are provided in the Glossary located at the back of the report.

In reference to questions H (CAM) or 4 (RCP) when "NO" is checked, the performance criteria for CAM and RCP methods allow for some quality control failures to occur and still be within method compliance. In these instances the specific failure is not narrated but noted in the associated QC table. The information is also incorporated in the Data Usability format of our Data Merger tool where it can be reviewed along with any associated usability implications.

Please see the associated ADEx data file for a comparison of laboratory reporting limits that were achieved with the regulatory Numerical Standards requested on the Chain of Custody.

HOLD POLICY
For samples submitted on hold, Alpha's policy is to hold samples (with the exception of Air canisters) free of charge for 21 calendar days from the date the project is completed. After 21 calendar days, we will dispose of all samples submitted including those put on hold unless you have contacted your Client Service Representative and made arrangements for Alpha to continue to hold the samples. Air canisters will be disposed after 3 business days from the date the project is completed.

Please contact Client Services at 800-624-9220 with any questions.

Project Name: NBHS IRA O+M **Lab Number:** L1405670
Project Number: 115058 **Report Date:** 03/25/14

Case Narrative (continued)

MCP Related Narratives

Volatile Organics

L1405670-02 has elevated detection limits due to the dilution required by the elevated concentrations of target compounds in the sample.

In reference to question G:

The requested CAM reporting limits were not achieved for all compounds, with the exception of trans-1,2-dichloroethene and cis-1,2-dichloroethene.

In reference to question H:

The WG677072-1/-2 LCS/LCSD recoveries, associated with L1405670-02, are above the individual acceptance criteria for acetone (155%/160%), but within the overall method allowances. The results of the associated sample are reported; however, all positive detects are considered to have a potentially high bias for this compound.

The initial calibration, associated with L1405670-02, did not meet the method required minimum response factor on the lowest calibration standard for 1,4-dioxane (0.00318), as well as the average response factor for 1,4-dioxane.

The continuing calibration standard, associated with L1405670-02, is outside the acceptance criteria for several compounds; however, it is within overall method allowances. A copy of the continuing calibration standard is included as an addendum to this report.

I, the undersigned, attest under the pains and penalties of perjury that, to the best of my knowledge and belief and based upon my personal inquiry of those responsible for providing the information contained in this analytical report, such information is accurate and complete. This certificate of analysis is not complete unless this page accompanies any and all pages of this report.

Authorized Signature: Michelle M. Morris

Title: Technical Director/Representative Date: 03/25/14

ORGANICS

VOLATILES

Project Name: NBHS IRA O+M **Lab Number:** L1405670

Project Number: 115058 **Report Date:** 03/25/14

SAMPLE RESULTS

Lab ID:	L1405670-02 D	Date Collected:	03/17/14 12:30
Client ID:	EFFLUENT	Date Received:	03/19/14
Sample Location:	NBHS NEW BEDFORD MA	Field Prep:	Not Specified
Matrix:	Water		
Analytical Method:	97,8260C		
Analytical Date:	03/21/14 11:51		
Analyst:	MM		

Parameter	Result	Qualifier	Units	RL	MDL	Dilution Factor
MCP Volatile Organics - Westborough Lab						
Methylene chloride	ND		ug/l	10	--	5
1,1-Dichloroethane	ND		ug/l	5.0	--	5
Chloroform	ND		ug/l	5.0	--	5
Carbon tetrachloride	ND		ug/l	5.0	--	5
1,2-Dichloropropane	ND		ug/l	5.0	--	5
Dibromochloromethane	ND		ug/l	5.0	--	5
1,1,2-Trichloroethane	ND		ug/l	5.0	--	5
Tetrachloroethene	ND		ug/l	5.0	--	5
Chlorobenzene	ND		ug/l	5.0	--	5
Trichlorofluoromethane	ND		ug/l	10	--	5
1,2-Dichloroethane	ND		ug/l	5.0	--	5
1,1,1-Trichloroethane	ND		ug/l	5.0	--	5
Bromodichloromethane	ND		ug/l	5.0	--	5
trans-1,3-Dichloropropene	ND		ug/l	2.5	--	5
cis-1,3-Dichloropropene	ND		ug/l	2.5	--	5
1,1-Dichloropropene	ND		ug/l	10	--	5
Bromoform	ND		ug/l	10	--	5
1,1,2,2-Tetrachloroethane	ND		ug/l	5.0	--	5
Benzene	ND		ug/l	2.5	--	5
Toluene	ND		ug/l	5.0	--	5
Ethylbenzene	ND		ug/l	5.0	--	5
Chloromethane	ND		ug/l	10	--	5
Bromomethane	ND		ug/l	10	--	5
Vinyl chloride	ND		ug/l	5.0	--	5
Chloroethane	ND		ug/l	10	--	5
1,1-Dichloroethene	ND		ug/l	5.0	--	5
trans-1,2-Dichloroethene	26		ug/l	5.0	--	5
Trichloroethene	ND		ug/l	5.0	--	5
1,2-Dichlorobenzene	ND		ug/l	5.0	--	5
1,3-Dichlorobenzene	ND		ug/l	5.0	--	5
1,4-Dichlorobenzene	ND		ug/l	5.0	--	5

Project Name: NBHS IRA O+M **Lab Number:** L1405670

Project Number: 115058 **Report Date:** 03/25/14

SAMPLE RESULTS

Lab ID: L1405670-02 D Date Collected: 03/17/14 12:30

Client ID: EFFLUENT Date Received: 03/19/14

Sample Location: NBHS NEW BEDFORD MA Field Prep: Not Specified

Parameter	Result	Qualifier	Units	RL	MDL	Dilution Factor
MCP Volatile Organics - Westborough Lab						
Methyl tert butyl ether	ND		ug/l	10	--	5
p/m-Xylene	ND		ug/l	10	--	5
o-Xylene	ND		ug/l	5.0	--	5
cis-1,2-Dichloroethene	170		ug/l	5.0	--	5
Dibromomethane	ND		ug/l	10	--	5
1,2,3-Trichloropropane	ND		ug/l	10	--	5
Styrene	ND		ug/l	5.0	--	5
Dichlorodifluoromethane	ND		ug/l	10	--	5
Acetone	ND		ug/l	25	--	5
Carbon disulfide	ND		ug/l	10	--	5
2-Butanone	ND		ug/l	25	--	5
4-Methyl-2-pentanone	ND		ug/l	25	--	5
2-Hexanone	ND		ug/l	25	--	5
Bromochloromethane	ND		ug/l	10	--	5
Tetrahydrofuran	ND		ug/l	10	--	5
2,2-Dichloropropane	ND		ug/l	10	--	5
1,2-Dibromoethane	ND		ug/l	10	--	5
1,3-Dichloropropane	ND		ug/l	10	--	5
1,1,1,2-Tetrachloroethane	ND		ug/l	5.0	--	5
Bromobenzene	ND		ug/l	10	--	5
n-Butylbenzene	ND		ug/l	10	--	5
sec-Butylbenzene	ND		ug/l	10	--	5
tert-Butylbenzene	ND		ug/l	10	--	5
o-Chlorotoluene	ND		ug/l	10	--	5
p-Chlorotoluene	ND		ug/l	10	--	5
1,2-Dibromo-3-chloropropane	ND		ug/l	10	--	5
Hexachlorobutadiene	ND		ug/l	3.0	--	5
Isopropylbenzene	ND		ug/l	10	--	5
p-Isopropyltoluene	ND		ug/l	10	--	5
Naphthalene	ND		ug/l	10	--	5
n-Propylbenzene	ND		ug/l	10	--	5
1,2,3-Trichlorobenzene	ND		ug/l	10	--	5
1,2,4-Trichlorobenzene	ND		ug/l	10	--	5
1,3,5-Trimethylbenzene	ND		ug/l	10	--	5
1,2,4-Trimethylbenzene	ND		ug/l	10	--	5
Ethyl ether	ND		ug/l	10	--	5
Isopropyl Ether	ND		ug/l	10	--	5
Ethyl-Tert-Butyl-Ether	ND		ug/l	10	--	5
Tertiary-Amyl Methyl Ether	ND		ug/l	10	--	5

Project Name: NBHS IRA O+M **Lab Number:** L1405670

Project Number: 115058 **Report Date:** 03/25/14

SAMPLE RESULTS

Lab ID: L1405670-02 D Date Collected: 03/17/14 12:30

Client ID: EFFLUENT Date Received: 03/19/14

Sample Location: NBHS NEW BEDFORD MA Field Prep: Not Specified

Parameter	Result	Qualifier	Units	RL	MDL	Dilution Factor
MCP Volatile Organics - Westborough Lab						
1,4-Dioxane	ND		ug/l	1200	--	5

Surrogate	% Recovery	Qualifier	Acceptance Criteria
1,2-Dichloroethane-d4	98		70-130
Toluene-d8	93		70-130
4-Bromofluorobenzene	94		70-130
Dibromofluoromethane	106		70-130

Project Name: NBHS IRA O+M **Lab Number:** L1405670

Project Number: 115058 **Report Date:** 03/25/14

Method Blank Analysis
Batch Quality Control

Analytical Method: 97,8260C
Analytical Date: 03/21/14 08:35
Analyst: MM

Parameter	Result	Qualifier	Units	RL	MDL
MCP Volatile Organics - Westborough Lab for sample(s): 02 Batch: WG677072-3					
Methylene chloride	ND		ug/l	2.0	--
1,1-Dichloroethane	ND		ug/l	1.0	--
Chloroform	ND		ug/l	1.0	--
Carbon tetrachloride	ND		ug/l	1.0	--
1,2-Dichloropropane	ND		ug/l	1.0	--
Dibromochloromethane	ND		ug/l	1.0	--
1,1,2-Trichloroethane	ND		ug/l	1.0	--
Tetrachloroethene	ND		ug/l	1.0	--
Chlorobenzene	ND		ug/l	1.0	--
Trichlorofluoromethane	ND		ug/l	2.0	--
1,2-Dichloroethane	ND		ug/l	1.0	--
1,1,1-Trichloroethane	ND		ug/l	1.0	--
Bromodichloromethane	ND		ug/l	1.0	--
trans-1,3-Dichloropropene	ND		ug/l	0.50	--
cis-1,3-Dichloropropene	ND		ug/l	0.50	--
1,1-Dichloropropene	ND		ug/l	2.0	--
Bromoform	ND		ug/l	2.0	--
1,1,2,2-Tetrachloroethane	ND		ug/l	1.0	--
Benzene	ND		ug/l	0.50	--
Toluene	ND		ug/l	1.0	--
Ethylbenzene	ND		ug/l	1.0	--
Chloromethane	ND		ug/l	2.0	--
Bromomethane	ND		ug/l	2.0	--
Vinyl chloride	ND		ug/l	1.0	--
Chloroethane	ND		ug/l	2.0	--
1,1-Dichloroethene	ND		ug/l	1.0	--
trans-1,2-Dichloroethene	ND		ug/l	1.0	--
Trichloroethene	ND		ug/l	1.0	--
1,2-Dichlorobenzene	ND		ug/l	1.0	--
1,3-Dichlorobenzene	ND		ug/l	1.0	--
1,4-Dichlorobenzene	ND		ug/l	1.0	--

Project Name: NBHS IRA O+M **Lab Number:** L1405670

Project Number: 115058 **Report Date:** 03/25/14

Method Blank Analysis
Batch Quality Control

Analytical Method: 97,8260C
Analytical Date: 03/21/14 08:35
Analyst: MM

Parameter	Result	Qualifier	Units	RL	MDL
MCP Volatile Organics - Westborough Lab for sample(s): 02 Batch: WG677072-3					
Methyl tert butyl ether	ND		ug/l	2.0	--
p/m-Xylene	ND		ug/l	2.0	--
o-Xylene	ND		ug/l	1.0	--
cis-1,2-Dichloroethene	ND		ug/l	1.0	--
Dibromomethane	ND		ug/l	2.0	--
1,2,3-Trichloropropane	ND		ug/l	2.0	--
Styrene	ND		ug/l	1.0	--
Dichlorodifluoromethane	ND		ug/l	2.0	--
Acetone	ND		ug/l	5.0	--
Carbon disulfide	ND		ug/l	2.0	--
2-Butanone	ND		ug/l	5.0	--
4-Methyl-2-pentanone	ND		ug/l	5.0	--
2-Hexanone	ND		ug/l	5.0	--
Bromochloromethane	ND		ug/l	2.0	--
Tetrahydrofuran	ND		ug/l	2.0	--
2,2-Dichloropropane	ND		ug/l	2.0	--
1,2-Dibromoethane	ND		ug/l	2.0	--
1,3-Dichloropropane	ND		ug/l	2.0	--
1,1,1,2-Tetrachloroethane	ND		ug/l	1.0	--
Bromobenzene	ND		ug/l	2.0	--
n-Butylbenzene	ND		ug/l	2.0	--
sec-Butylbenzene	ND		ug/l	2.0	--
tert-Butylbenzene	ND		ug/l	2.0	--
o-Chlorotoluene	ND		ug/l	2.0	--
p-Chlorotoluene	ND		ug/l	2.0	--
1,2-Dibromo-3-chloropropane	ND		ug/l	2.0	--
Hexachlorobutadiene	ND		ug/l	0.60	--
Isopropylbenzene	ND		ug/l	2.0	--
p-Isopropyltoluene	ND		ug/l	2.0	--
Naphthalene	ND		ug/l	2.0	--
n-Propylbenzene	ND		ug/l	2.0	--

Project Name: NBHS IRA O+M
Project Number: 115058

Lab Number: L1405670
Report Date: 03/25/14

Method Blank Analysis
Batch Quality Control

Analytical Method: 97,8260C
Analytical Date: 03/21/14 08:35
Analyst: MM

Parameter	Result	Qualifier	Units	RL	MDL
MCP Volatile Organics - Westborough Lab for sample(s): 02 Batch: WG677072-3					
1,2,3-Trichlorobenzene	ND		ug/l	2.0	--
1,2,4-Trichlorobenzene	ND		ug/l	2.0	--
1,3,5-Trimethylbenzene	ND		ug/l	2.0	--
1,2,4-Trimethylbenzene	ND		ug/l	2.0	--
Ethyl ether	ND		ug/l	2.0	--
Isopropyl Ether	ND		ug/l	2.0	--
Ethyl-Tert-Butyl-Ether	ND		ug/l	2.0	--
Tertiary-Amyl Methyl Ether	ND		ug/l	2.0	--
1,4-Dioxane	ND		ug/l	250	--

Surrogate	%Recovery	Qualifier	Acceptance Criteria
1,2-Dichloroethane-d4	96		70-130
Toluene-d8	93		70-130
4-Bromofluorobenzene	98		70-130
Dibromofluoromethane	98		70-130

Lab Control Sample Analysis
Batch Quality Control

Project Name: NBHS IRA O+M
Project Number: 115058

Lab Number: L1405670
Report Date: 03/25/14

Parameter	LCS %Recovery	Qual	LCSD %Recovery	Qual	%Recovery Limits	RPD	Qual	RPD Limits
MCP Volatile Organics - Westborough Lab Associated sample(s): 02 Batch: WG677072-1 WG677072-2								
Methylene chloride	105		101		70-130	4		20
1,1-Dichloroethane	97		91		70-130	6		20
Chloroform	102		93		70-130	9		20
Carbon tetrachloride	102		98		70-130	4		20
1,2-Dichloropropane	95		90		70-130	5		20
Dibromochloromethane	93		96		70-130	3		20
1,1,2-Trichloroethane	96		95		70-130	1		20
Tetrachloroethene	95		95		70-130	0		20
Chlorobenzene	93		92		70-130	1		20
Trichlorofluoromethane	103		100		70-130	3		20
1,2-Dichloroethane	99		93		70-130	6		20
1,1,1-Trichloroethane	102		97		70-130	5		20
Bromodichloromethane	100		95		70-130	5		20
trans-1,3-Dichloropropene	91		96		70-130	5		20
cis-1,3-Dichloropropene	98		94		70-130	4		20
1,1-Dichloropropene	98		91		70-130	7		20
Bromoform	88		94		70-130	7		20
1,1,2,2-Tetrachloroethane	93		98		70-130	5		20
Benzene	95		92		70-130	3		20
Toluene	91		95		70-130	4		20
Ethylbenzene	90		94		70-130	4		20

Lab Control Sample Analysis
Batch Quality Control

Project Name: NBHS IRA O+M
Project Number: 115058

Lab Number: L1405670
Report Date: 03/25/14

Parameter	LCS %Recovery	Qual	LCSD %Recovery	Qual	%Recovery Limits	RPD	Qual	RPD Limits
MCP Volatile Organics - Westborough Lab Associated sample(s): 02 Batch: WG677072-1 WG677072-2								
Chloromethane	81		75		70-130	8		20
Bromomethane	76		80		70-130	5		20
Vinyl chloride	90		85		70-130	6		20
Chloroethane	99		92		70-130	7		20
1,1-Dichloroethene	104		97		70-130	7		20
trans-1,2-Dichloroethene	103		93		70-130	10		20
Trichloroethene	100		91		70-130	9		20
1,2-Dichlorobenzene	96		98		70-130	2		20
1,3-Dichlorobenzene	93		96		70-130	3		20
1,4-Dichlorobenzene	94		98		70-130	4		20
Methyl tert butyl ether	104		96		70-130	8		20
p/m-Xylene	93		95		70-130	2		20
o-Xylene	92		95		70-130	3		20
cis-1,2-Dichloroethene	100		96		70-130	4		20
Dibromomethane	101		95		70-130	6		20
1,2,3-Trichloropropane	91		94		70-130	3		20
Styrene	106		113		70-130	6		20
Dichlorodifluoromethane	78		73		70-130	7		20
Acetone	**155**	Q	**160**	Q	70-130	3		20
Carbon disulfide	98		91		70-130	7		20
2-Butanone	118		111		70-130	6		20

Lab Control Sample Analysis
Batch Quality Control

Project Name: NBHS IRA O+M
Project Number: 115058

Lab Number: L1405670
Report Date: 03/25/14

Parameter	LCS %Recovery	Qual	LCSD %Recovery	Qual	%Recovery Limits	RPD	Qual	RPD Limits
MCP Volatile Organics - Westborough Lab Associated sample(s): 02 Batch: WG677072-1 WG677072-2								
4-Methyl-2-pentanone	98		99		70-130	1		20
2-Hexanone	104		116		70-130	11		20
Bromochloromethane	102		96		70-130	6		20
Tetrahydrofuran	90		96		70-130	6		20
2,2-Dichloropropane	103		97		70-130	6		20
1,2-Dibromoethane	96		92		70-130	4		20
1,3-Dichloropropane	94		95		70-130	1		20
1,1,1,2-Tetrachloroethane	92		94		70-130	2		20
Bromobenzene	92		97		70-130	5		20
n-Butylbenzene	95		94		70-130	1		20
sec-Butylbenzene	92		96		70-130	4		20
tert-Butylbenzene	93		97		70-130	4		20
o-Chlorotoluene	92		94		70-130	2		20
p-Chlorotoluene	94		96		70-130	2		20
1,2-Dibromo-3-chloropropane	74		88		70-130	17		20
Hexachlorobutadiene	102		101		70-130	1		20
Isopropylbenzene	95		96		70-130	1		20
p-Isopropyltoluene	94		97		70-130	3		20
Naphthalene	98		101		70-130	3		20
n-Propylbenzene	92		95		70-130	3		20
1,2,3-Trichlorobenzene	104		100		70-130	4		20

Lab Control Sample Analysis
Batch Quality Control

Project Name: NBHS IRA O+M
Project Number: 115058
Lab Number: L1405670
Report Date: 03/25/14

Parameter	LCS %Recovery	Qual	LCSD %Recovery	Qual	%Recovery Limits	RPD	Qual	RPD Limits
MCP Volatile Organics - Westborough Lab Associated sample(s): 02 Batch: WG677072-1 WG677072-2								
1,2,4-Trichlorobenzene	102		99		70-130	3		20
1,3,5-Trimethylbenzene	91		98		70-130	7		20
1,2,4-Trimethylbenzene	93		98		70-130	5		20
Ethyl ether	100		88		70-130	13		20
Isopropyl Ether	95		91		70-130	4		20
Ethyl-Tert-Butyl-Ether	97		92		70-130	5		20
Tertiary-Amyl Methyl Ether	100		93		70-130	7		20
1,4-Dioxane	110		117		70-130	6		20

Surrogate	LCS %Recovery	Qual	LCSD %Recovery	Qual	Acceptance Criteria
1,2-Dichloroethane-d4	99		92		70-130
Toluene-d8	93		94		70-130
4-Bromofluorobenzene	95		98		70-130
Dibromofluoromethane	102		95		70-130

Project Name: NBHS IRA O+M
Project Number: 115058

Lab Number: L1405670
Report Date: 03/25/14

Sample Receipt and Container Information

Were project specific reporting limits specified? YES

Reagent H2O Preserved Vials Frozen on: NA

Cooler Information Custody Seal

Cooler	
A	Absent

Container Information

Container ID	Container Type	Cooler	pH	Temp deg C	Pres	Seal	Analysis(*)
L1405670-01A	Vial HCl preserved	A	N/A	3.6	Y	Absent	HOLD-8260(14)
L1405670-01B	Vial HCl preserved	A	N/A	3.6	Y	Absent	HOLD-8260(14)
L1405670-01C	Vial HCl preserved	A	N/A	3.6	Y	Absent	HOLD-8260(14)
L1405670-02A	Vial HCl preserved	A	N/A	3.6	Y	Absent	MCP-8260-10(14)
L1405670-02B	Vial HCl preserved	A	N/A	3.6	Y	Absent	MCP-8260-10(14)
L1405670-02C	Vial HCl preserved	A	N/A	3.6	Y	Absent	MCP-8260-10(14)

*Values in parentheses indicate holding time in days

Project Name:	NBHS IRA O+M	**Lab Number:**	L1405670
Project Number:	115058	**Report Date:**	03/25/14

GLOSSARY

Acronyms

EDL	- Estimated Detection Limit: This value represents the level to which target analyte concentrations are reported as estimated values, when those target analyte concentrations are quantified below the reporting limit (RL). The EDL includes any adjustments from dilutions, concentrations or moisture content, where applicable. The use of EDLs is specific to the analysis of PAHs using Solid-Phase Microextraction (SPME).
EPA	- Environmental Protection Agency.
LCS	- Laboratory Control Sample: A sample matrix, free from the analytes of interest, spiked with verified known amounts of analytes or a material containing known and verified amounts of analytes.
LCSD	- Laboratory Control Sample Duplicate: Refer to LCS.
LFB	- Laboratory Fortified Blank: A sample matrix, free from the analytes of interest, spiked with verified known amounts of analytes or a material containing known and verified amounts of analytes.
MDL	- Method Detection Limit: This value represents the level to which target analyte concentrations are reported as estimated values, when those target analyte concentrations are quantified below the reporting limit (RL). The MDL includes any adjustments from dilutions, concentrations or moisture content, where applicable.
MS	- Matrix Spike Sample: A sample prepared by adding a known mass of target analyte to a specified amount of matrix sample for which an independent estimate of target analyte concentration is available.
MSD	- Matrix Spike Sample Duplicate: Refer to MS.
NA	- Not Applicable.
NC	- Not Calculated: Term is utilized when one or more of the results utilized in the calculation are non-detect at the parameter's reporting unit.
NI	- Not Ignitable.
RL	- Reporting Limit: The value at which an instrument can accurately measure an analyte at a specific concentration. The RL includes any adjustments from dilutions, concentrations or moisture content, where applicable.
RPD	- Relative Percent Difference: The results from matrix and/or matrix spike duplicates are primarily designed to assess the precision of analytical results in a given matrix and are expressed as relative percent difference (RPD). Values which are less than five times the reporting limit for any individual parameter are evaluated by utilizing the absolute difference between the values; although the RPD value will be provided in the report.
SRM	- Standard Reference Material: A reference sample of a known or certified value that is of the same or similar matrix as the associated field samples.

Footnotes

1	- The reference for this analyte should be considered modified since this analyte is absent from the target analyte list of the original method.

Terms

Analytical Method: Both the document from which the method originates and the analytical reference method. (Example: EPA 8260B is shown as 1,8260B.) The codes for the reference method documents are provided in the References section of the Addendum.

Data Qualifiers

A	- Spectra identified as "Aldol Condensation Product".
B	- The analyte was detected above the reporting limit in the associated method blank. Flag only applies to associated field samples that have detectable concentrations of the analyte at less than ten times (10x) the concentration found in the blank. For MCP-related projects, flag only applies to associated field samples that have detectable concentrations of the analyte at less than ten times (10x) the concentration found in the blank. For DOD-related projects, flag only applies to associated field samples that have detectable concentrations of the analyte at less than ten times (10x) the concentration found in the blank AND the analyte was detected above one-half the reporting limit (or above the reporting limit for common lab contaminants) in the associated method blank. For NJ-Air-related projects, flag only applies to associated field samples that have detectable concentrations of the analyte above the reporting limit.
C	- Co-elution: The target analyte co-elutes with a known lab standard (i.e. surrogate, internal standards, etc.) for co-extracted analyses.
D	- Concentration of analyte was quantified from diluted analysis. Flag only applies to field samples that have detectable concentrations of the analyte.
E	- Concentration of analyte exceeds the range of the calibration curve and/or linear range of the instrument.
G	- The concentration may be biased high due to matrix interferences (i.e, co-elution) with non-target compound(s). The result should be considered estimated.
H	- The analysis of pH was performed beyond the regulatory-required holding time of 15 minutes from the time of sample collection.
I	- The lower value for the two columns has been reported due to obvious interference.

Report Format: Data Usability Report

Project Name:	NBHS IRA O+M	**Lab Number:**	L1405670
Project Number:	115058	**Report Date:**	03/25/14

Data Qualifiers

M - Reporting Limit (RL) exceeds the MCP CAM Reporting Limit for this analyte.

NJ - Presumptive evidence of compound. This represents an estimated concentration for Tentatively Identified Compounds (TICs), where the identification is based on a mass spectral library search.

P - The RPD between the results for the two columns exceeds the method-specified criteria.

Q - The quality control sample exceeds the associated acceptance criteria. For DOD-related projects, LCS and/or Continuing Calibration Standard exceedences are also qualified on all associated sample results. Note: This flag is not applicable for matrix spike recoveries when the sample concentration is greater than 4x the spike added or for batch duplicate RPD when the sample concentrations are less than 5x the RL. (Metals only.)

R - Analytical results are from sample re-analysis.

RE - Analytical results are from sample re-extraction.

S - Analytical results are from modified screening analysis.

J - Estimated value. This represents an estimated concentration for Tentatively Identified Compounds (TICs).

ND - Not detected at the reporting limit (RL) for the sample.

Report Format: Data Usability Report

Project Name: NBHS IRA O+M **Lab Number:** L1405670
Project Number: 115058 **Report Date:** 03/25/14

REFERENCES

97 EPA Test Methods (SW-846) with QC Requirements & Performance Standards for the Analysis of EPA SW-846 Methods under the Massachusetts Contingency Plan, WSC-CAM-IIA, IIB, IIIA, IIIB, IIIC, IIID, VA, VB, VC, VIA, VIB, VIIIA and VIIIB, July 2010.

LIMITATION OF LIABILITIES

Alpha Analytical performs services with reasonable care and diligence normal to the analytical testing laboratory industry. In the event of an error, the sole and exclusive responsibility of Alpha Analytical shall be to re-perform the work at it's own expense. In no event shall Alpha Analytical be held liable for any incidental, consequential or special damages, including but not limited to, damages in any way connected with the use of, interpretation of, information or analysis provided by Alpha Analytical.

We strongly urge our clients to comply with EPA protocol regarding sample volume, preservation, cooling, containers, sampling procedures, holding time and splitting of samples in the field.

Certification Information

Last revised December 11, 2013

The following analytes are not included in our NELAP Scope of Accreditation:

Westborough Facility
EPA 524.2: Acetone, 2-Butanone (Methyl ethyl ketone (MEK)), Tert-butyl alcohol, 2-Hexanone, Tetrahydrofuran, 1,3,5-Trichlorobenzene, 4-Methyl-2-pentanone (MIBK), Carbon disulfide, Diethyl ether.
EPA 8260C: 1,2,4,5-Tetramethylbenzene, 4-Ethyltoluene, Iodomethane (methyl iodide), Methyl methacrylate, Azobenzene.
EPA 8330A/B: PETN, Picric Acid, Nitroglycerine, 2,6-DANT, 2,4-DANT.
EPA 8270D: 1-Methylnaphthalene, Dimethylnaphthalene,1,4-Diphenylhydrazine.
EPA 625: 4-Chloroaniline, 4-Methylphenol.
SM4500: Soil: Total Phosphorus, TKN, NO2, NO3.
EPA 9071: Total Petroleum Hydrocarbons, Oil & Grease.

Mansfield Facility
EPA 8270D: Biphenyl.
EPA TO-15: Halothane, 2,4,4-Trimethyl-2-pentene, 2,4,4-Trimethyl-1-pentene, Thiophene, 2-Methylthiophene, 3-Methylthiophene, 2-Ethylthiophene, 1,2,3-Trimethylbenzene, Indan, Indene, 1,2,4,5-Tetramethylbenzene, Benzothiophene, 1-Methylnaphthalene.

The following analytes are included in our Massachusetts DEP Scope of Accreditation, Westborough Facility:

Drinking Water
EPA 200.8: Sb,As,Ba,Be,Cd,Cr,Cu,Pb,Ni,Se,Tl; **EPA 200.7**: Ba,Be,Ca,Cd,Cr,Cu,Na; **EPA 245.1:** Mercury;
EPA 300.0: Nitrate-N, Fluoride, Sulfate; **EPA 353.2**: Nitrate-N, Nitrite-N; **SM4500NO3-F**: Nitrate-N, Nitrite-N; **SM4500F-C, SM4500CN-CE, EPA 180.1, SM2130B, SM4500Cl-D, SM2320B, SM2540C, SM4500H-B**
EPA 332: Perchlorate.
Microbiology: **SM9215B; SM9223-P/A, SM9223B-Colilert-QT, Enterolert-QT.**

Non-Potable Water
EPA 200.8: Al,Sb,As,Be,Cd,Cr,Cu,Pb,Mn,Ni,Se,Ag,Tl,Zn;
EPA 200.7: Al,Sb,As,Be,Cd,Ca,Cr,Co,Cu,Fe,Pb,Mg,Mn,Mo,Ni,K,Se,Ag,Na,Sr,Ti,Tl,V,Zn;
EPA 245.1, SM4500H,B, EPA 120.1, SM2510B, SM2540C, SM2340B, SM2320B, SM4500CL-E, SM4500F-BC, SM426C, SM4500NH3-BH, **EPA 350.1**: Ammonia-N, **LACHAT 10-107-06-1-B**: Ammonia-N, **SM4500NO3-F,**
EPA 353.2: Nitrate-N**, SM4500NH3-BC-NES, EPA 351.1, SM4500P-E, SM4500P-B, E, SM5220D, EPA 410.4, SM5210B, SM5310C, SM4500CL-D, EPA 1664, SM14 510AC, EPA 420.1, SM4500-CN-CE, SM2540D.**
EPA 624: Volatile Halocarbons & Aromatics,
EPA 608: Chlordane, Toxaphene, Aldrin, alpha-BHC, beta-BHC, gamma-BHC, delta-BHC, Dieldrin, DDD, DDE, DDT, Endosulfan I, Endosulfan II, Endosulfan sulfate, Endrin, Endrin Aldehyde, Heptachlor, Heptachlor Epoxide, PCBs
EPA 625: SVOC (Acid/Base/Neutral Extractables), **EPA 600/4-81-045**: PCB-Oil.
Microbiology: **SM9223B-Colilert-QT; Enterolert-QT, SM9222D-MF**.

For a complete listing of analytes and methods, please contact your Alpha Project Manager.

COC updated 3/19/14 kob

Serial_No:03251412:57

CHAIN OF CUSTODY

PAGE 1 OF 1

ALPHA ANALYTICAL

WESTBORO, MA TEL: 508-898-9220 FAX: 508-898-9193

MANSFIELD, MA TEL: 508-822-9300 FAX: 508-822-3288

Date Rec'd in Lab: 3/19/14

ALPHA Job #: L1405670

Client Information

Client: TRC

Address: 650 SUFFOLK ST
LOWELL MA

Phone: 978 970-5600

Fax:

Email: DSULLIVAN@TRCSOLUTIONS.COM
ALEONARD

☑ These samples have been previously analyzed by Alpha

Project Information

Project Name: NBHS IRA OXM

Project Location: NBHS NEWBEDFORD MA

Project #: 115058

Project Manager: DAVID SULLIVAN

ALPHA Quote #:

Turn-Around Time

☑ Standard ☐ RUSH (only confirmed if pre-approved!)

Date Due: 3/25/14 Time:

Report Information - Data Deliverables

☐ FAX ☑ EMAIL

☑ ADEx ☐ Add'l Deliverables

Billing Information

☐ Same as Client info PO #: 115058

Regulatory Requirements/Report Limits

State /Fed Program MCP Criteria

MA MCP PRESUMPTIVE CERTAINTY --- CT REASONABLE CONFIDENCE PROTO

☑ Yes ☐ No Are MCP Analytical Methods Required?

☐ Yes ☐ No Is Matrix Spike (MS) Required on this SDG? (If yes see note in Comments)

☐ Yes ☐ No Are CT RCP (Reasonable Confidence Protocols) Required?

Other Project Specific Requirements/Comments/Detection Limits:

If MS is required , indicate in Sample Specific Comments which samples and what tests MS to be performed.
(Note: All *CAM* methods for inorganic analyses require MS every 20 soil samples)

REPLACEMENT FOR MISLABELED CONTAINERS PREVIOUSLY DELIVERED 3/17/14

SAMPLE HANDLING
Filtration
☐ Done
☐ Not needed
☐ Lab to do
Preservation
☐ Lab to do
(Please specify below)

ALPHA Lab ID (Lab Use Only)	Sample ID	Collection Date	Collection Time	Sample Matrix	Sampler's Initials	VOC	Sample Specific Comments	TOTAL # BOTTLES
05670 01	INTRA - CARBON	3/18/14	12:15	X1	JF	✓	Cancel per AL	3
02	EFFLUENT	3/17/14	12:30	E	JF	✓		3

Container Type	V
Preservative	B

PLEASE ANSWER QUESTIONS ABOVE!

IS YOUR PROJECT MA MCP *or* CT RCP?

Relinquished By:	Date/Time	Received By:	Date/Time
Jamie C Fino	3/19	MCM	3/19/14 1105
MCM	3/19/14 1145	Eyuseth	3/19/14 1145

Please print clearly, legibly and completely. Samples can not be logged in and turnaround time clock will not start until any ambiguities are resolved. All samples submitted are subject to Alpha's Terms and Conditions. See reverse side.

FORM NO: 01-01 (rev. 18-Jan-2010)

CHAIN OF CUSTODY

PAGE 1 OF 1

ALPHA ANALYTICAL
WESTBORO, MA TEL: 508-898-9220 FAX: 508-898-9193
MANSFIELD, MA TEL: 508-822-9300 FAX: 508-822-3288

Date Rec'd in Lab: 3/19/14

ALPHA Job #: L1405670

Client Information

Client: TRC
Address: 650 SUFFOLK ST
LOWELL MA
Phone: 978 970-5600
Fax:
Email: DSULLIVAN ALEONARD@TRCSOLUTIONS.COM

☑ These samples have been previously analyzed by Alpha

Project Information

Project Name: NBHS IRA OXM
Project Location: NBHS NEWBEDFORD MA
Project #: 115058
Project Manager: DAVID SULLIVAN
ALPHA Quote #:

Turn-Around Time

☑ Standard ☐ RUSH (only confirmed if pre-approved!)
Date Due: 3/25/14 Time:

Report Information - Data Deliverables

☐ FAX ☑ EMAIL
☑ ADEx ☐ Add'l Deliverables

Billing Information

☐ Same as Client info PO #: C115058

Regulatory Requirements/Report Limits

State /Fed Program MCP Criteria

MA MCP PRESUMPTIVE CERTAINTY --- CT REASONABLE CONFIDENCE PROTO

☑ Yes ☐ No Are MCP Analytical Methods Required?
☐ Yes ☐ No Is Matrix Spike (MS) Required on this SDG? (If yes see note in Comments)
☐ Yes ☐ No Are CT RCP (Reasonable Confidence Protocols) Required?

Other Project Specific Requirements/Comments/Detection Limits:

If MS is required , indicate in Sample Specific Comments which samples and what tests MS to be performed.
(Note: All *CAM* methods for inorganic analyses require MS every 20 soil samples)

REPLACEMENT FOR MISLABELED CONTAINERS PREVIOUSLY DELIVERED 3/17/14

SAMPLE HANDLING
Filtration
☐ Done
☐ Not needed
☐ Lab to do
Preservation
☐ Lab to do
(Please specify below)

ALPHA Lab ID (Lab Use Only)	Sample ID	Collection Date	Collection Time	Sample Matrix	Sampler's Initials	VOCs	Sample Specific Comments	TOTAL # BOTTLES
05670 01	INTRA - CARBON	3/18/14	12:15	X1	JF	✓		3
02	EFFLUENT	3/17/14	12:30	E	JF	✓		3

Container Type	V
Preservative	B

PLEASE ANSWER QUESTIONS ABOVE!

IS YOUR PROJECT MA MCP *or* CT RCP?

Relinquished By:	Date/Time	Received By:	Date/Time
Jamie C Fino	3/19	MCM	3/19/14 1105
MCM	3/19/14 1145	Eyuseth	3/19/14 1145

Please print clearly, legibly and completely. Samples can not be logged in and turnaround time clock will not start until any ambiguities are resolved. All samples submitted are subject to Alpha's Terms and Conditions. See reverse side.

FORM NO: 01-01 (rev. 18-Jan-2010)

7A
Volatile Organics CONTINUING CALIBRATION CHECK

Lab Name: Alpha Analytical Labs

SDG No.: L1405670

Instrument ID: Jack.i Calibration Date: 21-MAR-2014 Time: 06:57

Lab File ID: 0321A05 Init. Calib. Date(s): 06-MAR-2 06-MAR-2

Sample No: 8260 CCAL Init. Calib. Times : 07:52 13:51

Compound	RRF	RRF	MIN RRF	%D	MAX %D	
dichlorodifluoromethane	.59436	.46189	.1	-22	20	F
chloromethane	1.1336	.91566	.1	-19	20	
vinyl chloride	.92614	.83666	.1	-10	20	
bromomethane	.23458	.17763	.1	-24	20	F
chloroethane	.49041	.48552	.1	-1	20	
trichlorofluoromethane	.81322	.83455	.1	3	20	
ethyl ether	.27632	.2759	.05	0	20	
1,1,-dichloroethene	.49987	.51959	.1	4	20	
carbon disulfide	1.3911	1.3582	.1	-2	20	
freon-113	.55867	.58367	.1	4	20	
iodomethane	100	83.329	.05	-17	20	
acrolein	.10565	.10894	.05	3	20	
methylene chloride	.58704	.61738	.1	5	20	
acetone	100	155	.1	55	20	F
trans-1,2-dichloroethene	.56434	.58176	.1	3	20	
methyl acetate	.42089	.43702	.1	4	20	
methyl tert butyl ether	1.3276	1.3770	.1	4	20	
tert butyl alcohol	.04417	.04857	.05	10	20	F
Diisopropyl Ether	3.2284	3.0529	.01	-5	20	
1,1-dichloroethane	1.4406	1.3986	.2	-3	20	
acrylonitrile	.23504	.23145	.05	-2	20	
Halothane	.45961	.45095	.05	-2	20	
Ethyl-Tert-Butyl-Ether	2.5041	2.4274	.05	-3	20	
vinyl acetate	1.8007	1.7784	.05	-1	20	
cis-1,2-dichloroethene	.6273	.62791	.1	0	20	
2,2-dichloropropane	.88473	.90773	.05	3	20	
cyclohexane	1.7958	1.7001	.01	-5	30	
bromochloromethane	.28399	.28845	.05	2	20	
chloroform	1.0367	1.0538	.2	2	20	
carbontetrachloride	.77235	.79182	.1	3	20	
tetrahydrofuran	.21607	.19509	.05	-10	20	
ethyl acetate	.6533	.64215	.05	-2	20	
1,1,1-trichloroethane	.89953	.91582	.1	2	20	
1,1-dichloropropene	.86464	.84712	.05	-2	20	
2-butanone	.29131	.34469	.1	18	20	
benzene	2.5723	2.4503	.5	-5	20	
Tertiary-Amyl Methyl Ether	1.4812	1.4750	.05	0	20	
1,2-dichloroethane	.90699	.90075	.1	-1	20	

FORM VII MCP-8260-10

7A
CONTINUING CALIBRATION CHECK

Lab Name: Alpha Analytical Labs

SDG No.: L1405670

Instrument ID: Jack.i Calibration Date: 21-MAR-2014 Time: 06:57

Lab File ID: 0321A05 Init. Calib. Date(s): 06-MAR-2 06-MAR-2

Sample No: 8260 CCAL Init. Calib. Times : 07:52 13:51

Compound	RRF	RRF	MIN RRF	%D	MAX %D	
methyl cyclohexane	.96989	.94706	.01	-2	30	
trichloroethene	.59513	.59533	.2	0	20	
dibromomethane	.30223	.30414	.05	1	20	
1,2-dichloropropane	.83868	.79881	.1	-5	20	
bromodichloromethane	.7528	.75342	.2	0	20	
1,4-dioxane	.00318	.00351	.05	10	20	F
2-chloroethylvinyl ether	.43057	.41332	.05	-4	20	
cis-1,3-dichloropropene	.9535	.93478	.2	-2	20	
toluene	2.0071	1.8268	.4	-9	20	
tetrachloroethene	.84549	.80265	.2	-5	20	
4-methyl-2-pentanone	.2332	.22783	.1	-2	20	
trans-1,3-dichloropropene	.97579	.89137	.1	-9	20	
1,1,2-trichloroethane	.46572	.44816	.1	-4	20	
ethyl-methacrylate	.81236	.75455	.01	-7	30	
chlorodibromomethane	.65421	.61082	.1	-7	20	
1,3-dichloropropane	1.0315	.97232	.05	-6	20	
1,2-dibromoethane	.57758	.55352	.1	-4	20	
2-hexanone	.50561	.52438	.1	4	20	
chlorobenzene	2.1604	2.0137	.5	-7	20	
ethyl benzene	3.7425	3.3764	.1	-10	20	
1,1,1,2-tetrachloroethane	.73254	.67698	.05	-8	20	
p/m xylene	1.4745	1.3779	.1	-7	20	
o xylene	1.3716	1.2583	.3	-8	20	
bromoform	.67689	.59775	.1	-12	20	
styrene	2.2463	2.3792	.3	6	20	
isopropylbenzene	6.6871	6.3285	.1	-5	20	
bromobenzene	1.6052	1.4811	.05	-8	20	
1,4-dichlorobutane	3.0213	2.7562	.01	-9	30	
n-propylbenzene	6.8365	6.3067	.05	-8	20	
1,1,2,2,-tetrachloroethane	1.2072	1.1282	.3	-7	20	
4-ethyltoluene	6.1760	5.6363	.05	-9	20	
2-chlorotoluene	4.8865	4.4893	.05	-8	20	
1,2,3-trichloropropane	1.0222	.93215	.05	-9	20	
1,3,5-trimethybenzene	5.0793	4.6315	.05	-9	20	
trans-1,4-dichloro-2-butene	.51726	.44588	.05	-14	20	
4-chorotoluene	4.4783	4.1984	.05	-6	20	
tert-butylbenzene	4.0882	3.8003	.05	-7	20	
1,2,4-trimethylbenzene	4.9118	4.5603	.05	-7	20	

FORM VII MCP-8260-10

7A
CONTINUING CALIBRATION CHECK

Lab Name: Alpha Analytical Labs

SDG No.: L1405670

Instrument ID: Jack.i Calibration Date: 21-MAR-2014 Time: 06:57

Lab File ID: 0321A05 Init. Calib. Date(s): 06-MAR-2 06-MAR-2

Sample No: 8260 CCAL Init. Calib. Times : 07:52 13:51

Compound	RRF	RRF	MIN RRF	%D	MAX %D	
sec-butylbenzene	5.6864	5.2549	.01	-8	20	
p-isopropyltoluene	4.5561	4.2950	.05	-6	20	
1,3-dichlorobenzene	2.8689	2.6753	.6	-7	20	
1,4-dichlorobenzene	2.8509	2.6889	.5	-6	20	
p-diethylbenzene	2.5536	2.4682	.05	-3	20	
n-butylbenzene	3.4143	3.2298	.05	-5	20	
1,2-dichlorobenzene	2.6108	2.5007	.4	-4	20	
1,2,4,5-tetramethylbenzene	3.7268	3.5021	.05	-6	20	
1,2-dibromo-3-chloropropane	.18901	.13974	.05	-26	20	F
1,3,5-trichlorobenzene	.57248	.60248	.05	5	20	
1,2,4-trichlorobenzene	1.1067	1.1346	.2	3	20	
hexachlorobutadiene	.37315	.37905	.05	2	20	
naphthalene	2.7345	2.6776	.05	-2	20	
1,2,3-trichlorobenzene	.90527	.9413	.05	4	20	
dibromofluoromethane	.24831	.25443	.05	2	20	
1,2-dichloroethane-d4	.32007	.31686	.05	-1	20	
toluene-d8	1.2595	1.1664	.01	-7	20	
4-bromofluorobenzene	.90814	.86727	.05	-5	20	

FORM VII MCP-8260-10

ANALYTICAL REPORT

Lab Number:	L1408541
Client:	TRC Environmental Consultants Wannalancit Mills 650 Suffolk Street Lowell, MA 01854
ATTN:	David Sullivan
Phone:	(978) 656-3565
Project Name:	NBHS O&M
Project Number:	115058
Report Date:	04/30/14

The original project report/data package is held by Alpha Analytical. This report/data package is paginated and should be reproduced only in its entirety. Alpha Analytical holds no responsibility for results and/or data that are not consistent with the original.

Certifications & Approvals: MA (M-MA086), NY (11148), CT (PH-0574), NH (2003), NJ NELAP (MA935), RI (LAO00065), ME (MA00086), PA (68-03671), USDA (Permit #P-330-11-00240), NC (666), TX (T104704476), DOD (L2217), US Army Corps of Engineers.

Eight Walkup Drive, Westborough, MA 01581-1019
508-898-9220 (Fax) 508-898-9193 800-624-9220 - www.alphalab.com

Project Name: NBHS O&M
Project Number: 115058

Lab Number: L1408541
Report Date: 04/30/14

Alpha Sample ID	Client ID	Sample Location	Collection Date/Time
L1408541-01	INFLUENT	NEW BEDFORD MA	04/21/14 12:30
L1408541-02	INTRA-CARBON	NEW BEDFORD MA	04/21/14 12:45
L1408541-03	EFFLUENT	NEW BEDFORD MA	04/21/14 13:00
L1408541-04	TRIP BLANK	NEW BEDFORD MA	04/21/14 00:00

Project Name: NBHS O&M **Lab Number:** L1408541

Project Number: 115058 **Report Date:** 04/30/14

MADEP MCP Response Action Analytical Report Certification

This form provides certifications for all samples performed by MCP methods. Please refer to the Sample Results and Container Information sections of this report for specification of MCP methods used for each analysis. The following questions pertain only to MCP Analytical Methods.

An affirmative response to questions A through F is required for "Presumptive Certainty" status		
A	Were all samples received in a condition consistent with those described on the Chain-of-Custody, properly preserved (including temperature) in the field or laboratory, and prepared/analyzed within method holding times?	YES
B	Were the analytical method(s) and all associated QC requirements specified in the selected CAM protocol(s) followed?	YES
C	Were all required corrective actions and analytical response actions specified in the selected CAM protocol(s) implemented for all identified performance standard non-conformances?	YES
D	Does the laboratory report comply with all the reporting requirements specified in CAM VII A, "Quality Assurance and Quality Control Guidelines for the Acquisition and Reporting of Analytical Data?"	YES
E a.	VPH, EPH, and APH Methods only: Was each method conducted without significant modification(s)? (Refer to the individual method(s) for a list of significant modifications).	N/A
E b.	APH and TO-15 Methods only: Was the complete analyte list reported for each method?	N/A
F	Were all applicable CAM protocol QC and performance standard non-conformances identified and evaluated in a laboratory narrative (including all "No" responses to Questions A through E)?	YES

A response to questions G, H and I is required for "Presumptive Certainty" status		
G	Were the reporting limits at or below all CAM reporting limits specified in the selected CAM protocol(s)?	YES
H	Were all QC performance standards specified in the CAM protocol(s) achieved?	NO
I	Were results reported for the complete analyte list specified in the selected CAM protocol(s)?	YES

For any questions answered "No", please refer to the case narrative section on the following page(s).

Please note that sample matrix information is located in the Sample Results section of this report.

Project Name: NBHS O&M
Project Number: 115058

Lab Number: L1408541
Report Date: 04/30/14

Case Narrative

The samples were received in accordance with the Chain of Custody and no significant deviations were encountered during the preparation or analysis unless otherwise noted. Sample Receipt, Container Information, and the Chain of Custody are located at the back of the report.

Results contained within this report relate only to the samples submitted under this Alpha Lab Number and meet all of the requirements of NELAC, for all NELAC accredited parameters. The data presented in this report is organized by parameter (i.e. VOC, SVOC, etc.). Sample specific Quality Control data (i.e. Surrogate Spike Recovery) is reported at the end of the target analyte list for each individual sample, followed by the Laboratory Batch Quality Control at the end of each parameter. If a sample was re-analyzed or re-extracted due to a required quality control corrective action and if both sets of data are reported, the Laboratory ID of the re-analysis or re-extraction is designated with an "R" or "RE", respectively. When multiple Batch Quality Control elements are reported (e.g. more than one LCS), the associated samples for each element are noted in the grey shaded header line of each data table. Any Laboratory Batch, Sample Specific % recovery or RPD value that is outside the listed Acceptance Criteria is bolded in the report. Performance criteria for CAM and RCP methods allow for some LCS compound failures to occur and still be within method compliance. In these instances, the specific failures are not narrated but are noted in the associated QC table. This information is also incorporated in the Data Usability format for our Data Merger tool where it can be reviewed along with any associated usability implications. Soil/sediments, solids and tissues are reported on a dry weight basis unless otherwise noted. Definitions of all data qualifiers and acronyms used in this report are provided in the Glossary located at the back of the report.

In reference to questions H (CAM) or 4 (RCP) when "NO" is checked, the performance criteria for CAM and RCP methods allow for some quality control failures to occur and still be within method compliance. In these instances the specific failure is not narrated but noted in the associated QC table. The information is also incorporated in the Data Usability format of our Data Merger tool where it can be reviewed along with any associated usability implications.

Please see the associated ADEx data file for a comparison of laboratory reporting limits that were achieved with the regulatory Numerical Standards requested on the Chain of Custody.

HOLD POLICY
For samples submitted on hold, Alpha's policy is to hold samples (with the exception of Air canisters) free of charge for 21 calendar days from the date the project is completed. After 21 calendar days, we will dispose of all samples submitted including those put on hold unless you have contacted your Client Service Representative and made arrangements for Alpha to continue to hold the samples. Air canisters will be disposed after 3 business days from the date the project is completed.

Please contact Client Services at 800-624-9220 with any questions.

Project Name: NBHS O&M **Lab Number:** L1408541
Project Number: 115058 **Report Date:** 04/30/14

Case Narrative (continued)

MCP Related Narratives

Volatile Organics

L1408541-01 and -03: The Effluent results are greater than the Influent results for trans-1,2-dichloroethene and cis-1,2-dichloroethene. The sample containers were verified as being labeled correctly by the laboratory, and the reported results were confirmed by the screen analysis results.

In reference to question H:

The initial calibration, associated with L1408541-01, -03 and -04, did not meet the method required minimum response factor on the lowest calibration standard for 1,4-dioxane (0.00230), as well as the average response factor for 1,4-dioxane.

The continuing calibration standard, associated with L1408541-01, -03 and -04, is outside the acceptance criteria for several compounds; however, it is within overall method allowances. A copy of the continuing calibration standard is included as an addendum to this report.

PCBs

In reference to question H:

The WG684647-2/-3 LCS/LCSD RPD associated with L1408541-01 and -03, is above the acceptance criteria for Aroclor 1016 (22%).

I, the undersigned, attest under the pains and penalties of perjury that, to the best of my knowledge and belief and based upon my personal inquiry of those responsible for providing the information contained in this analytical report, such information is accurate and complete. This certificate of analysis is not complete unless this page accompanies any and all pages of this report.

Authorized Signature: Lisa Westerlind

Title: Technical Director/Representative Date: 04/30/14

ORGANICS

VOLATILES

Project Name: NBHS O&M
Project Number: 115058
Lab Number: L1408541
Report Date: 04/30/14

SAMPLE RESULTS

Lab ID:	L1408541-01	Date Collected:	04/21/14 12:30
Client ID:	INFLUENT	Date Received:	04/23/14
Sample Location:	NEW BEDFORD MA	Field Prep:	Not Specified
Matrix:	Water		
Analytical Method:	97,8260C		
Analytical Date:	04/29/14 09:19		
Analyst:	MM		

Parameter	Result	Qualifier	Units	RL	MDL	Dilution Factor
MCP Volatile Organics - Westborough Lab						
Methylene chloride	ND		ug/l	2.0	--	1
1,1-Dichloroethane	ND		ug/l	1.0	--	1
Chloroform	ND		ug/l	1.0	--	1
Carbon tetrachloride	ND		ug/l	1.0	--	1
1,2-Dichloropropane	ND		ug/l	1.0	--	1
Dibromochloromethane	ND		ug/l	1.0	--	1
1,1,2-Trichloroethane	ND		ug/l	1.0	--	1
Tetrachloroethene	ND		ug/l	1.0	--	1
Chlorobenzene	ND		ug/l	1.0	--	1
Trichlorofluoromethane	ND		ug/l	2.0	--	1
1,2-Dichloroethane	ND		ug/l	1.0	--	1
1,1,1-Trichloroethane	ND		ug/l	1.0	--	1
Bromodichloromethane	ND		ug/l	1.0	--	1
trans-1,3-Dichloropropene	ND		ug/l	0.50	--	1
cis-1,3-Dichloropropene	ND		ug/l	0.50	--	1
1,1-Dichloropropene	ND		ug/l	2.0	--	1
Bromoform	ND		ug/l	2.0	--	1
1,1,2,2-Tetrachloroethane	ND		ug/l	1.0	--	1
Benzene	ND		ug/l	0.50	--	1
Toluene	ND		ug/l	1.0	--	1
Ethylbenzene	ND		ug/l	1.0	--	1
Chloromethane	ND		ug/l	2.0	--	1
Bromomethane	ND		ug/l	2.0	--	1
Vinyl chloride	4.1		ug/l	1.0	--	1
Chloroethane	ND		ug/l	2.0	--	1
1,1-Dichloroethene	ND		ug/l	1.0	--	1
trans-1,2-Dichloroethene	5.5		ug/l	1.0	--	1
Trichloroethene	5.3		ug/l	1.0	--	1
1,2-Dichlorobenzene	ND		ug/l	1.0	--	1
1,3-Dichlorobenzene	ND		ug/l	1.0	--	1
1,4-Dichlorobenzene	1.3		ug/l	1.0	--	1

Project Name: NBHS O&M **Lab Number:** L1408541

Project Number: 115058 **Report Date:** 04/30/14

SAMPLE RESULTS

Lab ID: L1408541-01 Date Collected: 04/21/14 12:30

Client ID: INFLUENT Date Received: 04/23/14

Sample Location: NEW BEDFORD MA Field Prep: Not Specified

Parameter	Result	Qualifier	Units	RL	MDL	Dilution Factor
MCP Volatile Organics - Westborough Lab						
Methyl tert butyl ether	ND		ug/l	2.0	--	1
p/m-Xylene	ND		ug/l	2.0	--	1
o-Xylene	ND		ug/l	1.0	--	1
cis-1,2-Dichloroethene	21		ug/l	1.0	--	1
Dibromomethane	ND		ug/l	2.0	--	1
1,2,3-Trichloropropane	ND		ug/l	2.0	--	1
Styrene	ND		ug/l	1.0	--	1
Dichlorodifluoromethane	ND		ug/l	2.0	--	1
Acetone	ND		ug/l	5.0	--	1
Carbon disulfide	ND		ug/l	2.0	--	1
2-Butanone	ND		ug/l	5.0	--	1
4-Methyl-2-pentanone	ND		ug/l	5.0	--	1
2-Hexanone	ND		ug/l	5.0	--	1
Bromochloromethane	ND		ug/l	2.0	--	1
Tetrahydrofuran	ND		ug/l	2.0	--	1
2,2-Dichloropropane	ND		ug/l	2.0	--	1
1,2-Dibromoethane	ND		ug/l	2.0	--	1
1,3-Dichloropropane	ND		ug/l	2.0	--	1
1,1,1,2-Tetrachloroethane	ND		ug/l	1.0	--	1
Bromobenzene	ND		ug/l	2.0	--	1
n-Butylbenzene	ND		ug/l	2.0	--	1
sec-Butylbenzene	ND		ug/l	2.0	--	1
tert-Butylbenzene	ND		ug/l	2.0	--	1
o-Chlorotoluene	ND		ug/l	2.0	--	1
p-Chlorotoluene	ND		ug/l	2.0	--	1
1,2-Dibromo-3-chloropropane	ND		ug/l	2.0	--	1
Hexachlorobutadiene	ND		ug/l	0.60	--	1
Isopropylbenzene	ND		ug/l	2.0	--	1
p-Isopropyltoluene	ND		ug/l	2.0	--	1
Naphthalene	ND		ug/l	2.0	--	1
n-Propylbenzene	ND		ug/l	2.0	--	1
1,2,3-Trichlorobenzene	ND		ug/l	2.0	--	1
1,2,4-Trichlorobenzene	ND		ug/l	2.0	--	1
1,3,5-Trimethylbenzene	ND		ug/l	2.0	--	1
1,2,4-Trimethylbenzene	ND		ug/l	2.0	--	1
Ethyl ether	ND		ug/l	2.0	--	1
Isopropyl Ether	ND		ug/l	2.0	--	1
Ethyl-Tert-Butyl-Ether	ND		ug/l	2.0	--	1
Tertiary-Amyl Methyl Ether	ND		ug/l	2.0	--	1

Project Name: NBHS O&M **Lab Number:** L1408541

Project Number: 115058 **Report Date:** 04/30/14

SAMPLE RESULTS

Lab ID:	L1408541-01	Date Collected:	04/21/14 12:30
Client ID:	INFLUENT	Date Received:	04/23/14
Sample Location:	NEW BEDFORD MA	Field Prep:	Not Specified

Parameter	Result	Qualifier	Units	RL	MDL	Dilution Factor
MCP Volatile Organics - Westborough Lab						
1,4-Dioxane	ND		ug/l	250	--	1

Surrogate	% Recovery	Qualifier	Acceptance Criteria
1,2-Dichloroethane-d4	108		70-130
Toluene-d8	101		70-130
4-Bromofluorobenzene	101		70-130
Dibromofluoromethane	105		70-130

Project Name: NBHS O&M
Project Number: 115058
Lab Number: L1408541
Report Date: 04/30/14

SAMPLE RESULTS

Lab ID:	L1408541-03	Date Collected:	04/21/14 13:00
Client ID:	EFFLUENT	Date Received:	04/23/14
Sample Location:	NEW BEDFORD MA	Field Prep:	Not Specified
Matrix:	Water		
Analytical Method:	97,8260C		
Analytical Date:	04/29/14 08:48		
Analyst:	MM		

Parameter	Result	Qualifier	Units	RL	MDL	Dilution Factor
MCP Volatile Organics - Westborough Lab						
Methylene chloride	ND		ug/l	2.0	--	1
1,1-Dichloroethane	ND		ug/l	1.0	--	1
Chloroform	ND		ug/l	1.0	--	1
Carbon tetrachloride	ND		ug/l	1.0	--	1
1,2-Dichloropropane	ND		ug/l	1.0	--	1
Dibromochloromethane	ND		ug/l	1.0	--	1
1,1,2-Trichloroethane	ND		ug/l	1.0	--	1
Tetrachloroethene	ND		ug/l	1.0	--	1
Chlorobenzene	ND		ug/l	1.0	--	1
Trichlorofluoromethane	ND		ug/l	2.0	--	1
1,2-Dichloroethane	ND		ug/l	1.0	--	1
1,1,1-Trichloroethane	ND		ug/l	1.0	--	1
Bromodichloromethane	ND		ug/l	1.0	--	1
trans-1,3-Dichloropropene	ND		ug/l	0.50	--	1
cis-1,3-Dichloropropene	ND		ug/l	0.50	--	1
1,1-Dichloropropene	ND		ug/l	2.0	--	1
Bromoform	ND		ug/l	2.0	--	1
1,1,2,2-Tetrachloroethane	ND		ug/l	1.0	--	1
Benzene	ND		ug/l	0.50	--	1
Toluene	ND		ug/l	1.0	--	1
Ethylbenzene	ND		ug/l	1.0	--	1
Chloromethane	ND		ug/l	2.0	--	1
Bromomethane	ND		ug/l	2.0	--	1
Vinyl chloride	ND		ug/l	1.0	--	1
Chloroethane	ND		ug/l	2.0	--	1
1,1-Dichloroethene	ND		ug/l	1.0	--	1
trans-1,2-Dichloroethene	25		ug/l	1.0	--	1
Trichloroethene	ND		ug/l	1.0	--	1
1,2-Dichlorobenzene	ND		ug/l	1.0	--	1
1,3-Dichlorobenzene	ND		ug/l	1.0	--	1
1,4-Dichlorobenzene	ND		ug/l	1.0	--	1

Project Name: NBHS O&M **Lab Number:** L1408541

Project Number: 115058 **Report Date:** 04/30/14

SAMPLE RESULTS

Lab ID: L1408541-03 Date Collected: 04/21/14 13:00

Client ID: EFFLUENT Date Received: 04/23/14

Sample Location: NEW BEDFORD MA Field Prep: Not Specified

Parameter	Result	Qualifier	Units	RL	MDL	Dilution Factor
MCP Volatile Organics - Westborough Lab						
Methyl tert butyl ether	ND		ug/l	2.0	--	1
p/m-Xylene	ND		ug/l	2.0	--	1
o-Xylene	ND		ug/l	1.0	--	1
cis-1,2-Dichloroethene	100		ug/l	1.0	--	1
Dibromomethane	ND		ug/l	2.0	--	1
1,2,3-Trichloropropane	ND		ug/l	2.0	--	1
Styrene	ND		ug/l	1.0	--	1
Dichlorodifluoromethane	ND		ug/l	2.0	--	1
Acetone	ND		ug/l	5.0	--	1
Carbon disulfide	ND		ug/l	2.0	--	1
2-Butanone	ND		ug/l	5.0	--	1
4-Methyl-2-pentanone	ND		ug/l	5.0	--	1
2-Hexanone	ND		ug/l	5.0	--	1
Bromochloromethane	ND		ug/l	2.0	--	1
Tetrahydrofuran	ND		ug/l	2.0	--	1
2,2-Dichloropropane	ND		ug/l	2.0	--	1
1,2-Dibromoethane	ND		ug/l	2.0	--	1
1,3-Dichloropropane	ND		ug/l	2.0	--	1
1,1,1,2-Tetrachloroethane	ND		ug/l	1.0	--	1
Bromobenzene	ND		ug/l	2.0	--	1
n-Butylbenzene	ND		ug/l	2.0	--	1
sec-Butylbenzene	ND		ug/l	2.0	--	1
tert-Butylbenzene	ND		ug/l	2.0	--	1
o-Chlorotoluene	ND		ug/l	2.0	--	1
p-Chlorotoluene	ND		ug/l	2.0	--	1
1,2-Dibromo-3-chloropropane	ND		ug/l	2.0	--	1
Hexachlorobutadiene	ND		ug/l	0.60	--	1
Isopropylbenzene	ND		ug/l	2.0	--	1
p-Isopropyltoluene	ND		ug/l	2.0	--	1
Naphthalene	ND		ug/l	2.0	--	1
n-Propylbenzene	ND		ug/l	2.0	--	1
1,2,3-Trichlorobenzene	ND		ug/l	2.0	--	1
1,2,4-Trichlorobenzene	ND		ug/l	2.0	--	1
1,3,5-Trimethylbenzene	ND		ug/l	2.0	--	1
1,2,4-Trimethylbenzene	ND		ug/l	2.0	--	1
Ethyl ether	ND		ug/l	2.0	--	1
Isopropyl Ether	ND		ug/l	2.0	--	1
Ethyl-Tert-Butyl-Ether	ND		ug/l	2.0	--	1
Tertiary-Amyl Methyl Ether	ND		ug/l	2.0	--	1

Project Name: NBHS O&M **Lab Number:** L1408541

Project Number: 115058 **Report Date:** 04/30/14

SAMPLE RESULTS

Lab ID:	L1408541-03	Date Collected:	04/21/14 13:00
Client ID:	EFFLUENT	Date Received:	04/23/14
Sample Location:	NEW BEDFORD MA	Field Prep:	Not Specified

Parameter	Result	Qualifier	Units	RL	MDL	Dilution Factor
MCP Volatile Organics - Westborough Lab						
1,4-Dioxane	ND		ug/l	250	--	1

Surrogate	% Recovery	Qualifier	Acceptance Criteria
1,2-Dichloroethane-d4	109		70-130
Toluene-d8	101		70-130
4-Bromofluorobenzene	104		70-130
Dibromofluoromethane	109		70-130

Project Name: NBHS O&M
Project Number: 115058
Lab Number: L1408541
Report Date: 04/30/14

SAMPLE RESULTS

Lab ID:	L1408541-04	Date Collected:	04/21/14 00:00
Client ID:	TRIP BLANK	Date Received:	04/23/14
Sample Location:	NEW BEDFORD MA	Field Prep:	Not Specified
Matrix:	Water		
Analytical Method:	97,8260C		
Analytical Date:	04/29/14 08:17		
Analyst:	MM		

Parameter	Result	Qualifier	Units	RL	MDL	Dilution Factor
MCP Volatile Organics - Westborough Lab						
Methylene chloride	ND		ug/l	2.0	--	1
1,1-Dichloroethane	ND		ug/l	1.0	--	1
Chloroform	ND		ug/l	1.0	--	1
Carbon tetrachloride	ND		ug/l	1.0	--	1
1,2-Dichloropropane	ND		ug/l	1.0	--	1
Dibromochloromethane	ND		ug/l	1.0	--	1
1,1,2-Trichloroethane	ND		ug/l	1.0	--	1
Tetrachloroethene	ND		ug/l	1.0	--	1
Chlorobenzene	ND		ug/l	1.0	--	1
Trichlorofluoromethane	ND		ug/l	2.0	--	1
1,2-Dichloroethane	ND		ug/l	1.0	--	1
1,1,1-Trichloroethane	ND		ug/l	1.0	--	1
Bromodichloromethane	ND		ug/l	1.0	--	1
trans-1,3-Dichloropropene	ND		ug/l	0.50	--	1
cis-1,3-Dichloropropene	ND		ug/l	0.50	--	1
1,1-Dichloropropene	ND		ug/l	2.0	--	1
Bromoform	ND		ug/l	2.0	--	1
1,1,2,2-Tetrachloroethane	ND		ug/l	1.0	--	1
Benzene	ND		ug/l	0.50	--	1
Toluene	ND		ug/l	1.0	--	1
Ethylbenzene	ND		ug/l	1.0	--	1
Chloromethane	ND		ug/l	2.0	--	1
Bromomethane	ND		ug/l	2.0	--	1
Vinyl chloride	ND		ug/l	1.0	--	1
Chloroethane	ND		ug/l	2.0	--	1
1,1-Dichloroethene	ND		ug/l	1.0	--	1
trans-1,2-Dichloroethene	ND		ug/l	1.0	--	1
Trichloroethene	ND		ug/l	1.0	--	1
1,2-Dichlorobenzene	ND		ug/l	1.0	--	1
1,3-Dichlorobenzene	ND		ug/l	1.0	--	1
1,4-Dichlorobenzene	ND		ug/l	1.0	--	1

Project Name: NBHS O&M **Lab Number:** L1408541

Project Number: 115058 **Report Date:** 04/30/14

SAMPLE RESULTS

Lab ID: L1408541-04 Date Collected: 04/21/14 00:00

Client ID: TRIP BLANK Date Received: 04/23/14

Sample Location: NEW BEDFORD MA Field Prep: Not Specified

Parameter	Result	Qualifier	Units	RL	MDL	Dilution Factor
MCP Volatile Organics - Westborough Lab						
Methyl tert butyl ether	ND		ug/l	2.0	--	1
p/m-Xylene	ND		ug/l	2.0	--	1
o-Xylene	ND		ug/l	1.0	--	1
cis-1,2-Dichloroethene	ND		ug/l	1.0	--	1
Dibromomethane	ND		ug/l	2.0	--	1
1,2,3-Trichloropropane	ND		ug/l	2.0	--	1
Styrene	ND		ug/l	1.0	--	1
Dichlorodifluoromethane	ND		ug/l	2.0	--	1
Acetone	ND		ug/l	5.0	--	1
Carbon disulfide	ND		ug/l	2.0	--	1
2-Butanone	ND		ug/l	5.0	--	1
4-Methyl-2-pentanone	ND		ug/l	5.0	--	1
2-Hexanone	ND		ug/l	5.0	--	1
Bromochloromethane	ND		ug/l	2.0	--	1
Tetrahydrofuran	ND		ug/l	2.0	--	1
2,2-Dichloropropane	ND		ug/l	2.0	--	1
1,2-Dibromoethane	ND		ug/l	2.0	--	1
1,3-Dichloropropane	ND		ug/l	2.0	--	1
1,1,1,2-Tetrachloroethane	ND		ug/l	1.0	--	1
Bromobenzene	ND		ug/l	2.0	--	1
n-Butylbenzene	ND		ug/l	2.0	--	1
sec-Butylbenzene	ND		ug/l	2.0	--	1
tert-Butylbenzene	ND		ug/l	2.0	--	1
o-Chlorotoluene	ND		ug/l	2.0	--	1
p-Chlorotoluene	ND		ug/l	2.0	--	1
1,2-Dibromo-3-chloropropane	ND		ug/l	2.0	--	1
Hexachlorobutadiene	ND		ug/l	0.60	--	1
Isopropylbenzene	ND		ug/l	2.0	--	1
p-Isopropyltoluene	ND		ug/l	2.0	--	1
Naphthalene	ND		ug/l	2.0	--	1
n-Propylbenzene	ND		ug/l	2.0	--	1
1,2,3-Trichlorobenzene	ND		ug/l	2.0	--	1
1,2,4-Trichlorobenzene	ND		ug/l	2.0	--	1
1,3,5-Trimethylbenzene	ND		ug/l	2.0	--	1
1,2,4-Trimethylbenzene	ND		ug/l	2.0	--	1
Ethyl ether	ND		ug/l	2.0	--	1
Isopropyl Ether	ND		ug/l	2.0	--	1
Ethyl-Tert-Butyl-Ether	ND		ug/l	2.0	--	1
Tertiary-Amyl Methyl Ether	ND		ug/l	2.0	--	1

Project Name: NBHS O&M **Lab Number:** L1408541

Project Number: 115058 **Report Date:** 04/30/14

SAMPLE RESULTS

Lab ID:	L1408541-04	Date Collected:	04/21/14 00:00
Client ID:	TRIP BLANK	Date Received:	04/23/14
Sample Location:	NEW BEDFORD MA	Field Prep:	Not Specified

Parameter	Result	Qualifier	Units	RL	MDL	Dilution Factor
MCP Volatile Organics - Westborough Lab						
1,4-Dioxane	ND		ug/l	250	--	1

Surrogate	% Recovery	Qualifier	Acceptance Criteria
1,2-Dichloroethane-d4	107		70-130
Toluene-d8	102		70-130
4-Bromofluorobenzene	105		70-130
Dibromofluoromethane	104		70-130

Project Name: NBHS O&M **Lab Number:** L1408541

Project Number: 115058 **Report Date:** 04/30/14

Method Blank Analysis
Batch Quality Control

Analytical Method: 97,8260C
Analytical Date: 04/29/14 07:14
Analyst: MM

Parameter	Result	Qualifier	Units	RL	MDL
MCP Volatile Organics - Westborough Lab for sample(s): 01,03-04 Batch: WG685753-3					
Methylene chloride	ND		ug/l	2.0	--
1,1-Dichloroethane	ND		ug/l	1.0	--
Chloroform	ND		ug/l	1.0	--
Carbon tetrachloride	ND		ug/l	1.0	--
1,2-Dichloropropane	ND		ug/l	1.0	--
Dibromochloromethane	ND		ug/l	1.0	--
1,1,2-Trichloroethane	ND		ug/l	1.0	--
Tetrachloroethene	ND		ug/l	1.0	--
Chlorobenzene	ND		ug/l	1.0	--
Trichlorofluoromethane	ND		ug/l	2.0	--
1,2-Dichloroethane	ND		ug/l	1.0	--
1,1,1-Trichloroethane	ND		ug/l	1.0	--
Bromodichloromethane	ND		ug/l	1.0	--
trans-1,3-Dichloropropene	ND		ug/l	0.50	--
cis-1,3-Dichloropropene	ND		ug/l	0.50	--
1,1-Dichloropropene	ND		ug/l	2.0	--
Bromoform	ND		ug/l	2.0	--
1,1,2,2-Tetrachloroethane	ND		ug/l	1.0	--
Benzene	ND		ug/l	0.50	--
Toluene	ND		ug/l	1.0	--
Ethylbenzene	ND		ug/l	1.0	--
Chloromethane	ND		ug/l	2.0	--
Bromomethane	ND		ug/l	2.0	--
Vinyl chloride	ND		ug/l	1.0	--
Chloroethane	ND		ug/l	2.0	--
1,1-Dichloroethene	ND		ug/l	1.0	--
trans-1,2-Dichloroethene	ND		ug/l	1.0	--
Trichloroethene	ND		ug/l	1.0	--
1,2-Dichlorobenzene	ND		ug/l	1.0	--
1,3-Dichlorobenzene	ND		ug/l	1.0	--
1,4-Dichlorobenzene	ND		ug/l	1.0	--

Project Name: NBHS O&M **Lab Number:** L1408541

Project Number: 115058 **Report Date:** 04/30/14

Method Blank Analysis
Batch Quality Control

Analytical Method: 97,8260C
Analytical Date: 04/29/14 07:14
Analyst: MM

Parameter	Result	Qualifier	Units	RL	MDL
MCP Volatile Organics - Westborough Lab for sample(s): 01,03-04 Batch: WG685753-3					
Methyl tert butyl ether	ND		ug/l	2.0	--
p/m-Xylene	ND		ug/l	2.0	--
o-Xylene	ND		ug/l	1.0	--
cis-1,2-Dichloroethene	ND		ug/l	1.0	--
Dibromomethane	ND		ug/l	2.0	--
1,2,3-Trichloropropane	ND		ug/l	2.0	--
Styrene	ND		ug/l	1.0	--
Dichlorodifluoromethane	ND		ug/l	2.0	--
Acetone	ND		ug/l	5.0	--
Carbon disulfide	ND		ug/l	2.0	--
2-Butanone	ND		ug/l	5.0	--
4-Methyl-2-pentanone	ND		ug/l	5.0	--
2-Hexanone	ND		ug/l	5.0	--
Bromochloromethane	ND		ug/l	2.0	--
Tetrahydrofuran	ND		ug/l	2.0	--
2,2-Dichloropropane	ND		ug/l	2.0	--
1,2-Dibromoethane	ND		ug/l	2.0	--
1,3-Dichloropropane	ND		ug/l	2.0	--
1,1,1,2-Tetrachloroethane	ND		ug/l	1.0	--
Bromobenzene	ND		ug/l	2.0	--
n-Butylbenzene	ND		ug/l	2.0	--
sec-Butylbenzene	ND		ug/l	2.0	--
tert-Butylbenzene	ND		ug/l	2.0	--
o-Chlorotoluene	ND		ug/l	2.0	--
p-Chlorotoluene	ND		ug/l	2.0	--
1,2-Dibromo-3-chloropropane	ND		ug/l	2.0	--
Hexachlorobutadiene	ND		ug/l	0.60	--
Isopropylbenzene	ND		ug/l	2.0	--
p-Isopropyltoluene	ND		ug/l	2.0	--
Naphthalene	ND		ug/l	2.0	--
n-Propylbenzene	ND		ug/l	2.0	--

Project Name: NBHS O&M
Project Number: 115058

Lab Number: L1408541
Report Date: 04/30/14

Method Blank Analysis
Batch Quality Control

Analytical Method: 97,8260C
Analytical Date: 04/29/14 07:14
Analyst: MM

Parameter	Result	Qualifier	Units	RL	MDL
MCP Volatile Organics - Westborough Lab for sample(s): 01,03-04 Batch: WG685753-3					
1,2,3-Trichlorobenzene	ND		ug/l	2.0	--
1,2,4-Trichlorobenzene	ND		ug/l	2.0	--
1,3,5-Trimethylbenzene	ND		ug/l	2.0	--
1,2,4-Trimethylbenzene	ND		ug/l	2.0	--
Ethyl ether	ND		ug/l	2.0	--
Isopropyl Ether	ND		ug/l	2.0	--
Ethyl-Tert-Butyl-Ether	ND		ug/l	2.0	--
Tertiary-Amyl Methyl Ether	ND		ug/l	2.0	--
1,4-Dioxane	ND		ug/l	250	--

Tentatively Identified Compounds

No Tentatively Identified Compounds	ND	ug/l

Surrogate	%Recovery	Qualifier	Acceptance Criteria
1,2-Dichloroethane-d4	109		70-130
Toluene-d8	102		70-130
4-Bromofluorobenzene	102		70-130
Dibromofluoromethane	104		70-130

Lab Control Sample Analysis
Batch Quality Control

Project Name: NBHS O&M
Project Number: 115058

Lab Number: L1408541
Report Date: 04/30/14

Parameter	LCS %Recovery	Qual	LCSD %Recovery	Qual	%Recovery Limits	RPD	Qual	RPD Limits
MCP Volatile Organics - Westborough Lab Associated sample(s): 01,03-04 Batch: WG685753-1 WG685753-2								
Methylene chloride	105		101		70-130	4		20
1,1-Dichloroethane	103		102		70-130	1		20
Chloroform	104		103		70-130	1		20
Carbon tetrachloride	92		98		70-130	6		20
1,2-Dichloropropane	100		98		70-130	2		20
Dibromochloromethane	95		99		70-130	4		20
1,1,2-Trichloroethane	100		98		70-130	2		20
Tetrachloroethene	109		106		70-130	3		20
Chlorobenzene	108		105		70-130	3		20
Trichlorofluoromethane	116		114		70-130	2		20
1,2-Dichloroethane	106		104		70-130	2		20
1,1,1-Trichloroethane	101		105		70-130	4		20
Bromodichloromethane	97		100		70-130	3		20
trans-1,3-Dichloropropene	84		87		70-130	4		20
cis-1,3-Dichloropropene	94		97		70-130	3		20
1,1-Dichloropropene	103		102		70-130	1		20
Bromoform	82		90		70-130	9		20
1,1,2,2-Tetrachloroethane	96		97		70-130	1		20
Benzene	105		103		70-130	2		20
Toluene	105		102		70-130	3		20
Ethylbenzene	111		107		70-130	4		20

Lab Control Sample Analysis
Batch Quality Control

Project Name: NBHS O&M
Project Number: 115058

Lab Number: L1408541
Report Date: 04/30/14

Parameter	LCS %Recovery	Qual	LCSD %Recovery	Qual	%Recovery Limits	RPD	Qual	RPD Limits
MCP Volatile Organics - Westborough Lab Associated sample(s): 01,03-04 Batch: WG685753-1 WG685753-2								
Chloromethane	107		102		70-130	5		20
Bromomethane	90		89		70-130	1		20
Vinyl chloride	119		117		70-130	2		20
Chloroethane	121		110		70-130	10		20
1,1-Dichloroethene	102		101		70-130	1		20
trans-1,2-Dichloroethene	104		100		70-130	4		20
Trichloroethene	104		102		70-130	2		20
1,2-Dichlorobenzene	106		105		70-130	1		20
1,3-Dichlorobenzene	107		106		70-130	1		20
1,4-Dichlorobenzene	107		105		70-130	2		20
Methyl tert butyl ether	86		85		70-130	1		20
p/m-Xylene	113		109		70-130	4		20
o-Xylene	111		109		70-130	2		20
cis-1,2-Dichloroethene	101		100		70-130	1		20
Dibromomethane	102		103		70-130	1		20
1,2,3-Trichloropropane	96		99		70-130	3		20
Styrene	113		110		70-130	3		20
Dichlorodifluoromethane	123		119		70-130	3		20
Acetone	93		100		70-130	7		20
Carbon disulfide	101		100		70-130	1		20
2-Butanone	95		97		70-130	2		20

Lab Control Sample Analysis
Batch Quality Control

Project Name: NBHS O&M
Project Number: 115058

Lab Number: L1408541
Report Date: 04/30/14

Parameter	LCS %Recovery	Qual	LCSD %Recovery	Qual	%Recovery Limits	RPD	Qual	RPD Limits
MCP Volatile Organics - Westborough Lab Associated sample(s): 01,03-04 Batch: WG685753-1 WG685753-2								
4-Methyl-2-pentanone	91		93		70-130	2		20
2-Hexanone	94		95		70-130	1		20
Bromochloromethane	104		102		70-130	2		20
Tetrahydrofuran	88		85		70-130	3		20
2,2-Dichloropropane	83		88		70-130	6		20
1,2-Dibromoethane	103		102		70-130	1		20
1,3-Dichloropropane	101		99		70-130	2		20
1,1,1,2-Tetrachloroethane	103		104		70-130	1		20
Bromobenzene	104		104		70-130	0		20
n-Butylbenzene	105		104		70-130	1		20
sec-Butylbenzene	106		105		70-130	1		20
tert-Butylbenzene	106		105		70-130	1		20
o-Chlorotoluene	108		107		70-130	1		20
p-Chlorotoluene	108		107		70-130	1		20
1,2-Dibromo-3-chloropropane	86		91		70-130	6		20
Hexachlorobutadiene	100		98		70-130	2		20
Isopropylbenzene	110		108		70-130	2		20
p-Isopropyltoluene	110		108		70-130	2		20
Naphthalene	83		85		70-130	2		20
n-Propylbenzene	108		108		70-130	0		20
1,2,3-Trichlorobenzene	87		89		70-130	2		20

Lab Control Sample Analysis
Batch Quality Control

Project Name: NBHS O&M
Project Number: 115058

Lab Number: L1408541
Report Date: 04/30/14

Parameter	LCS %Recovery	Qual	LCSD %Recovery	Qual	%Recovery Limits	RPD	Qual	RPD Limits
MCP Volatile Organics - Westborough Lab Associated sample(s): 01,03-04 Batch: WG685753-1 WG685753-2								
1,2,4-Trichlorobenzene	93		94		70-130	1		20
1,3,5-Trimethylbenzene	109		109		70-130	0		20
1,2,4-Trimethylbenzene	110		108		70-130	2		20
Ethyl ether	87		83		70-130	5		20
Isopropyl Ether	101		99		70-130	2		20
Ethyl-Tert-Butyl-Ether	98		98		70-130	0		20
Tertiary-Amyl Methyl Ether	90		90		70-130	0		20
1,4-Dioxane	116		115		70-130	1		20

Surrogate	LCS %Recovery	Qual	LCSD %Recovery	Qual	Acceptance Criteria
1,2-Dichloroethane-d4	107		109		70-130
Toluene-d8	102		102		70-130
4-Bromofluorobenzene	98		101		70-130
Dibromofluoromethane	106		106		70-130

PCBS

Project Name: NBHS O&M
Project Number: 115058

Lab Number: L1408541
Report Date: 04/30/14

SAMPLE RESULTS

Lab ID:	L1408541-01	Date Collected:	04/21/14 12:30
Client ID:	INFLUENT	Date Received:	04/23/14
Sample Location:	NEW BEDFORD MA	Field Prep:	Not Specified
Matrix:	Water	Extraction Method:	EPA 3510C
Analytical Method:	97,8082	Extraction Date:	04/24/14 00:47
Analytical Date:	04/24/14 16:17	Cleanup Method1:	EPA 3665A
Analyst:	JW	Cleanup Date1:	04/24/14
		Cleanup Method2:	EPA 3660B
		Cleanup Date2:	04/24/14

Parameter	Result	Qualifier	Units	RL	MDL	Dilution Factor	Column
MCP Polychlorinated Biphenyls - Westborough Lab							
Aroclor 1016	ND		ug/l	0.250	--	1	A
Aroclor 1221	ND		ug/l	0.250	--	1	A
Aroclor 1232	ND		ug/l	0.250	--	1	A
Aroclor 1242	ND		ug/l	0.250	--	1	A
Aroclor 1248	ND		ug/l	0.250	--	1	A
Aroclor 1254	3.19		ug/l	0.250	--	1	A
Aroclor 1260	ND		ug/l	0.250	--	1	A
Aroclor 1262	ND		ug/l	0.250	--	1	A
Aroclor 1268	ND		ug/l	0.250	--	1	A
PCBs, Total	3.19		ug/l	0.250	--	1	A

Surrogate	% Recovery	Qualifier	Acceptance Criteria	Column
2,4,5,6-Tetrachloro-m-xylene	55		30-150	A
Decachlorobiphenyl	49		30-150	A
2,4,5,6-Tetrachloro-m-xylene	56		30-150	B
Decachlorobiphenyl	51		30-150	B

Project Name: NBHS O&M
Project Number: 115058

Lab Number: L1408541
Report Date: 04/30/14

SAMPLE RESULTS

Lab ID:	L1408541-03	Date Collected:	04/21/14 13:00
Client ID:	EFFLUENT	Date Received:	04/23/14
Sample Location:	NEW BEDFORD MA	Field Prep:	Not Specified
Matrix:	Water	Extraction Method:	EPA 3510C
Analytical Method:	97,8082	Extraction Date:	04/24/14 00:47
Analytical Date:	04/24/14 15:51	Cleanup Method1:	EPA 3665A
Analyst:	JW	Cleanup Date1:	04/24/14
		Cleanup Method2:	EPA 3660B
		Cleanup Date2:	04/24/14

Parameter	Result	Qualifier	Units	RL	MDL	Dilution Factor	Column
MCP Polychlorinated Biphenyls - Westborough Lab							
Aroclor 1016	ND		ug/l	0.250	--	1	A
Aroclor 1221	ND		ug/l	0.250	--	1	A
Aroclor 1232	ND		ug/l	0.250	--	1	A
Aroclor 1242	ND		ug/l	0.250	--	1	A
Aroclor 1248	ND		ug/l	0.250	--	1	A
Aroclor 1254	ND		ug/l	0.250	--	1	A
Aroclor 1260	ND		ug/l	0.250	--	1	A
Aroclor 1262	ND		ug/l	0.250	--	1	A
Aroclor 1268	ND		ug/l	0.250	--	1	A
PCBs, Total	ND		ug/l	0.250	--	1	A

Surrogate	% Recovery	Qualifier	Acceptance Criteria	Column
2,4,5,6-Tetrachloro-m-xylene	64		30-150	A
Decachlorobiphenyl	60		30-150	A
2,4,5,6-Tetrachloro-m-xylene	66		30-150	B
Decachlorobiphenyl	63		30-150	B

Project Name: NBHS O&M

Project Number: 115058

Lab Number: L1408541

Report Date: 04/30/14

Method Blank Analysis
Batch Quality Control

Analytical Method: 97,8082
Analytical Date: 04/24/14 15:11
Analyst: JW

Extraction Method: EPA 3510C
Extraction Date: 04/24/14 00:47
Cleanup Method1: EPA 3665A
Cleanup Date1: 04/24/14
Cleanup Method2: EPA 3660B
Cleanup Date2: 04/24/14

Parameter	Result	Qualifier	Units	RL	MDL	Column
MCP Polychlorinated Biphenyls - Westborough Lab for sample(s): 01,03 Batch: WG684647-1						
Aroclor 1016	ND		ug/l	0.250	--	A
Aroclor 1221	ND		ug/l	0.250	--	A
Aroclor 1232	ND		ug/l	0.250	--	A
Aroclor 1242	ND		ug/l	0.250	--	A
Aroclor 1248	ND		ug/l	0.250	--	A
Aroclor 1254	ND		ug/l	0.250	--	A
Aroclor 1260	ND		ug/l	0.250	--	A
Aroclor 1262	ND		ug/l	0.250	--	A
Aroclor 1268	ND		ug/l	0.250	--	A
PCBs, Total	ND		ug/l	0.250	--	A

Surrogate	%Recovery	Qualifier	Acceptance Criteria	Column
2,4,5,6-Tetrachloro-m-xylene	72		30-150	B
2,4,5,6-Tetrachloro-m-xylene	72		30-150	A
Decachlorobiphenyl	67		30-150	A
Decachlorobiphenyl	71		30-150	B

Lab Control Sample Analysis

Batch Quality Control

Project Name: NBHS O&M

Project Number: 115058

Lab Number: L1408541

Report Date: 04/30/14

Parameter	LCS %Recovery	Qual	LCSD %Recovery	Qual	%Recovery Limits	RPD	Qual	RPD Limits	Column
MCP Polychlorinated Biphenyls - Westborough Lab Associated sample(s): 01,03 Batch: WG684647-2 WG684647-3									
Aroclor 1016	87		70		40-140	**22**	Q	20	A
Aroclor 1260	73		62		40-140	16		20	A

Surrogate	LCS %Recovery	Qual	LCSD %Recovery	Qual	Acceptance Criteria	Column
2,4,5,6-Tetrachloro-m-xylene	90		73		30-150	A
Decachlorobiphenyl	79		64		30-150	A
2,4,5,6-Tetrachloro-m-xylene	93		74		30-150	B
Decachlorobiphenyl	85		66		30-150	B

Project Name: NBHS O&M
Project Number: 115058

Lab Number: L1408541
Report Date: 04/30/14

Sample Receipt and Container Information

Were project specific reporting limits specified? YES

Reagent H2O Preserved Vials Frozen on: NA

Cooler Information Custody Seal

Cooler	
A	Absent

Container Information

Container ID	Container Type	Cooler	pH	Temp deg C	Pres	Seal	Analysis(*)
L1408541-01A	Vial HCl preserved	A	N/A	3.0	Y	Absent	MCP-8260-10(14)
L1408541-01B	Vial HCl preserved	A	N/A	3.0	Y	Absent	MCP-8260-10(14)
L1408541-01C	Vial HCl preserved	A	N/A	3.0	Y	Absent	MCP-8260-10(14)
L1408541-01D	Amber 1000ml unpreserved	A	8	3.0	Y	Absent	MCP-8082-10(365)
L1408541-01E	Amber 1000ml unpreserved	A	8	3.0	Y	Absent	MCP-8082-10(365)
L1408541-02A	Vial HCl preserved	A	N/A	3.0	Y	Absent	HOLD-8260(14)
L1408541-02B	Vial HCl preserved	A	N/A	3.0	Y	Absent	HOLD-8260(14)
L1408541-02C	Vial HCl preserved	A	N/A	3.0	Y	Absent	HOLD-8260(14)
L1408541-02D	Amber 1000ml unpreserved	A	8	3.0	Y	Absent	HOLD-8260(14)
L1408541-02E	Amber 1000ml unpreserved	A	8	3.0	Y	Absent	HOLD-8260(14)
L1408541-03A	Vial HCl preserved	A	N/A	3.0	Y	Absent	MCP-8260-10(14)
L1408541-03B	Vial HCl preserved	A	N/A	3.0	Y	Absent	MCP-8260-10(14)
L1408541-03C	Vial HCl preserved	A	N/A	3.0	Y	Absent	MCP-8260-10(14)
L1408541-03D	Amber 1000ml unpreserved	A	8	3.0	Y	Absent	MCP-8082-10(365)
L1408541-03E	Amber 1000ml unpreserved	A	8	3.0	Y	Absent	MCP-8082-10(365)
L1408541-04A	Vial HCl preserved	A	N/A	3.0	Y	Absent	MCP-8260-10(14)

*Values in parentheses indicate holding time in days

Project Name:	NBHS O&M	**Lab Number:**	L1408541
Project Number:	115058	**Report Date:**	04/30/14

GLOSSARY

Acronyms

EDL	- Estimated Detection Limit: This value represents the level to which target analyte concentrations are reported as estimated values, when those target analyte concentrations are quantified below the reporting limit (RL). The EDL includes any adjustments from dilutions, concentrations or moisture content, where applicable. The use of EDLs is specific to the analysis of PAHs using Solid-Phase Microextraction (SPME).
EPA	- Environmental Protection Agency.
LCS	- Laboratory Control Sample: A sample matrix, free from the analytes of interest, spiked with verified known amounts of analytes or a material containing known and verified amounts of analytes.
LCSD	- Laboratory Control Sample Duplicate: Refer to LCS.
LFB	- Laboratory Fortified Blank: A sample matrix, free from the analytes of interest, spiked with verified known amounts of analytes or a material containing known and verified amounts of analytes.
MDL	- Method Detection Limit: This value represents the level to which target analyte concentrations are reported as estimated values, when those target analyte concentrations are quantified below the reporting limit (RL). The MDL includes any adjustments from dilutions, concentrations or moisture content, where applicable.
MS	- Matrix Spike Sample: A sample prepared by adding a known mass of target analyte to a specified amount of matrix sample for which an independent estimate of target analyte concentration is available.
MSD	- Matrix Spike Sample Duplicate: Refer to MS.
NA	- Not Applicable.
NC	- Not Calculated: Term is utilized when one or more of the results utilized in the calculation are non-detect at the parameter's reporting unit.
NI	- Not Ignitable.
RL	- Reporting Limit: The value at which an instrument can accurately measure an analyte at a specific concentration. The RL includes any adjustments from dilutions, concentrations or moisture content, where applicable.
RPD	- Relative Percent Difference: The results from matrix and/or matrix spike duplicates are primarily designed to assess the precision of analytical results in a given matrix and are expressed as relative percent difference (RPD). Values which are less than five times the reporting limit for any individual parameter are evaluated by utilizing the absolute difference between the values; although the RPD value will be provided in the report.
SRM	- Standard Reference Material: A reference sample of a known or certified value that is of the same or similar matrix as the associated field samples.

Footnotes

1	- The reference for this analyte should be considered modified since this analyte is absent from the target analyte list of the original method.

Terms

Analytical Method: Both the document from which the method originates and the analytical reference method. (Example: EPA 8260B is shown as 1,8260B.) The codes for the reference method documents are provided in the References section of the Addendum.

Data Qualifiers

A	- Spectra identified as "Aldol Condensation Product".
B	- The analyte was detected above the reporting limit in the associated method blank. Flag only applies to associated field samples that have detectable concentrations of the analyte at less than ten times (10x) the concentration found in the blank. For MCP-related projects, flag only applies to associated field samples that have detectable concentrations of the analyte at less than ten times (10x) the concentration found in the blank. For DOD-related projects, flag only applies to associated field samples that have detectable concentrations of the analyte at less than ten times (10x) the concentration found in the blank AND the analyte was detected above one-half the reporting limit (or above the reporting limit for common lab contaminants) in the associated method blank. For NJ-Air-related projects, flag only applies to associated field samples that have detectable concentrations of the analyte above the reporting limit.
C	- Co-elution: The target analyte co-elutes with a known lab standard (i.e. surrogate, internal standards, etc.) for co-extracted analyses.
D	- Concentration of analyte was quantified from diluted analysis. Flag only applies to field samples that have detectable concentrations of the analyte.
E	- Concentration of analyte exceeds the range of the calibration curve and/or linear range of the instrument.
G	- The concentration may be biased high due to matrix interferences (i.e, co-elution) with non-target compound(s). The result should be considered estimated.
H	- The analysis of pH was performed beyond the regulatory-required holding time of 15 minutes from the time of sample collection.
I	- The lower value for the two columns has been reported due to obvious interference.

Report Format: Data Usability Report

Project Name:	NBHS O&M	**Lab Number:**	L1408541
Project Number:	115058	**Report Date:**	04/30/14

Data Qualifiers

M - Reporting Limit (RL) exceeds the MCP CAM Reporting Limit for this analyte.

NJ - Presumptive evidence of compound. This represents an estimated concentration for Tentatively Identified Compounds (TICs), where the identification is based on a mass spectral library search.

P - The RPD between the results for the two columns exceeds the method-specified criteria.

Q - The quality control sample exceeds the associated acceptance criteria. For DOD-related projects, LCS and/or Continuing Calibration Standard exceedences are also qualified on all associated sample results. Note: This flag is not applicable for matrix spike recoveries when the sample concentration is greater than 4x the spike added or for batch duplicate RPD when the sample concentrations are less than 5x the RL. (Metals only.)

R - Analytical results are from sample re-analysis.

RE - Analytical results are from sample re-extraction.

S - Analytical results are from modified screening analysis.

J - Estimated value. This represents an estimated concentration for Tentatively Identified Compounds (TICs).

ND - Not detected at the reporting limit (RL) for the sample.

Report Format: Data Usability Report

Project Name: NBHS O&M **Lab Number:** L1408541
Project Number: 115058 **Report Date:** 04/30/14

REFERENCES

97 EPA Test Methods (SW-846) with QC Requirements & Performance Standards for the Analysis of EPA SW-846 Methods under the Massachusetts Contingency Plan, WSC-CAM-IIA, IIB, IIIA, IIIB, IIIC, IIID, VA, VB, VC, VIA, VIB, VIIIA and VIIIB, July 2010.

LIMITATION OF LIABILITIES

Alpha Analytical performs services with reasonable care and diligence normal to the analytical testing laboratory industry. In the event of an error, the sole and exclusive responsibility of Alpha Analytical shall be to re-perform the work at it's own expense. In no event shall Alpha Analytical be held liable for any incidental, consequential or special damages, including but not limited to, damages in any way connected with the use of, interpretation of, information or analysis provided by Alpha Analytical.

We strongly urge our clients to comply with EPA protocol regarding sample volume, preservation, cooling, containers, sampling procedures, holding time and splitting of samples in the field.

Certification Information

Last revised April 15, 2014

The following analytes are not included in our NELAP Scope of Accreditation:

Westborough Facility
EPA 524.2: Acetone, 2-Butanone (Methyl ethyl ketone (MEK)), Tert-butyl alcohol, 2-Hexanone, Tetrahydrofuran, 1,3,5-Trichlorobenzene, 4-Methyl-2-pentanone (MIBK), Carbon disulfide, Diethyl ether.
EPA 8260C: 1,2,4,5-Tetramethylbenzene, 4-Ethyltoluene, Iodomethane (methyl iodide), Methyl methacrylate, Azobenzene.
EPA 8330A/B: PETN, Picric Acid, Nitroglycerine, 2,6-DANT, 2,4-DANT.
EPA 8270D: 1-Methylnaphthalene, Dimethylnaphthalene,1,4-Diphenylhydrazine.
EPA 625: 4-Chloroaniline, 4-Methylphenol.
SM4500: Soil: Total Phosphorus, TKN, NO2, NO3.
EPA 9071: Total Petroleum Hydrocarbons, Oil & Grease.

Mansfield Facility
EPA 8270D: Biphenyl.
EPA 2540D: TSS
EPA TO-15: Halothane, 2,4,4-Trimethyl-2-pentene, 2,4,4-Trimethyl-1-pentene, Thiophene, 2-Methylthiophene, 3-Methylthiophene, 2-Ethylthiophene, 1,2,3-Trimethylbenzene, Indan, Indene, 1,2,4,5-Tetramethylbenzene, Benzothiophene, 1-Methylnaphthalene.

The following analytes are included in our Massachusetts DEP Scope of Accreditation, Westborough Facility:

Drinking Water
EPA 200.8: Sb,As,Ba,Be,Cd,Cr,Cu,Pb,Ni,Se,Tl; **EPA 200.7**: Ba,Be,Ca,Cd,Cr,Cu,Na; **EPA 245.1:** Mercury;
EPA 300.0: Nitrate-N, Fluoride, Sulfate; **EPA 353.2**: Nitrate-N, Nitrite-N; **SM4500NO3-F**: Nitrate-N, Nitrite-N; **SM4500F-C, SM4500CN-CE, EPA 180.1, SM2130B, SM4500Cl-D, SM2320B, SM2540C, SM4500H-B**
EPA 332: Perchlorate.
Microbiology: **SM9215B; SM9223-P/A, SM9223B-Colilert-QT, Enterolert-QT.**

Non-Potable Water
EPA 200.8: Al,Sb,As,Be,Cd,Cr,Cu,Pb,Mn,Ni,Se,Ag,Tl,Zn;
EPA 200.7: Al,Sb,As,Be,Cd,Ca,Cr,Co,Cu,Fe,Pb,Mg,Mn,Mo,Ni,K,Se,Ag,Na,Sr,Ti,Tl,V,Zn;
EPA 245.1, SM4500H,B, EPA 120.1, SM2510B, SM2540C, SM2340B, SM2320B, SM4500CL-E, SM4500F-BC, SM426C, SM4500NH3-BH, **EPA 350.1**: Ammonia-N, **LACHAT 10-107-06-1-B**: Ammonia-N, **SM4500NO3-F, EPA 353.2**: Nitrate-N**, SM4500NH3-BC-NES, EPA 351.1, SM4500P-E, SM4500P-B, E, SM5220D, EPA 410.4, SM5210B, SM5310C, SM4500CL-D, EPA 1664, SM14 510AC, EPA 420.1, SM4500-CN-CE, SM2540D.**
EPA 624: Volatile Halocarbons & Aromatics,
EPA 608: Chlordane, Toxaphene, Aldrin, alpha-BHC, beta-BHC, gamma-BHC, delta-BHC, Dieldrin, DDD, DDE, DDT, Endosulfan I, Endosulfan II, Endosulfan sulfate, Endrin, Endrin Aldehyde, Heptachlor, Heptachlor Epoxide, PCBs
EPA 625: SVOC (Acid/Base/Neutral Extractables), **EPA 600/4-81-045**: PCB-Oil.
Microbiology: **SM9223B-Colilert-QT; Enterolert-QT, SM9222D-MF**.

For a complete listing of analytes and methods, please contact your Alpha Project Manager.

CHAIN OF CUSTODY

PAGE 1 OF 1

Date Rec'd in Lab: 4/23/14

ALPHA Job #: L1408541

ALPHA ANALYTICAL
World Class Chemistry
8 Walkup Drive, Westboro, MA 01581, Tel: 508-898-9220
320 Forbes Blvd, Mansfield, MA 02048, Tel: 508-822-9300

Project Information

Project Name: NBHS O&M
Project Location: NEW BEDFORD MA.
Project #: 115058
Project Manager: DAVID SULLIVAN / AL LEONARD
ALPHA Quote #:

Report Information - Data Deliverables

☑ ADEx ☑ EMAIL

Billing Information

☐ Same as Client info PO #: C115058

Client Information

Client: TRC
Address: 650 SUFFOLK ST
LOWELL MA
Phone: 978-970-5600
Email: DSULLIVAN / ALEONARD@TRCSOLUTIONS.COM

Regulatory Requirements & Project Information Requirements

☑ Yes ☐ No MA MCP Analytical Methods ☐ Yes ☐ No CT RCP Analytical Methods
☐ Yes ☐ No Matrix Spike Required on this SDG? (Required for MCP Inorganics)
☐ Yes ☐ No GW1 Standards (Info Required for Metals & EPH with Targets)
☐ Yes ☐ No NPDES RGP
☐ Other State /Fed Program ________ Criteria ________

Turn-Around Time

☑ Standard ☐ RUSH *(only confirmed if pre-approved!)*

Date Due: 4/30

Additional Project Information:

ANALYSIS: VOC: ☑ 8260 ☐ 624 ☐ 524.2; SVOC: ☐ ABN ☐ PAH; METALS: ☐ MCP 13 ☐ MCP 14 ☐ RCP 15; METALS: ☐ RCRA5 ☐ RCRA8 ☐ PP13; EPH: ☐ Ranges & Targets ☐ Ranges Only; VPH: ☐ Ranges & Targets ☐ Ranges Only; ☑ PCB ☐ PEST; TPH: ☐ Quant Only ☐ Fingerprint

SAMPLE INFO: Filtration ☐ Field ☐ Lab to do; Preservation ☐ Lab to do

ALPHA Lab ID (Lab Use Only)	Sample ID	Collection Date	Collection Time	Sample Matrix	Sampler Initials	VOC	PCB	Sample Comments	TOTAL # BOTTLES
08541-01	INFLUENT	4/21	12:30	I	JF	✓	✓		
02	INTRA-CARBON	4/21	12:45	XO	JF	~~✓~~	~~✓~~	hold	
03	EFFLUENT	4/21	13:00	E	JF	✓	✓		
04	TRIP BLANK					✓			

	VOC	PCB
Container Type	V	A
Preservative	B	A

Container Type: P= Plastic, A= Amber glass, V= Vial, G= Glass, B= Bacteria cup, C= Cube, O= Other, E= Encore, D= BOD Bottle

Preservative: A= None, B= HCl, C= HNO_3, D= H_2SO_4, E= NaOH, F= MeOH, G= $NaHSO_4$, H = $Na_2S_2O_3$, I= Ascorbic Acid, J = NH_4Cl, K= Zn Acetate, O= Other

Relinquished By:	Date/Time	Received By:	Date/Time
Jason C. Fiorino	4/22	Nathan Smith	4/23 08:00
~~Nathan Smith~~	~~4/23~~	~~Nathan Smith~~	~~@NS 4/23~~
Laura Miller	4/23/14 10:09	[illegible]	4/23/14 11:15
[illegible]	4/23/14 11:40	[illegible]	4/23/14 1120

All samples submitted are subject to Alpha's Terms and Conditions. See reverse side.
FORM NO: 01-01 (rev. 12-Mar-2012)

CHAIN OF CUSTODY

PAGE 1 OF 1

ALPHA ANALYTICAL — World Class Chemistry
8 Walkup Drive, Westboro, MA 01581, Tel: 508-898-9220
320 Forbes Blvd, Mansfield, MA 02048, Tel: 508-822-9300

Date Rec'd in Lab: 4/23/14

ALPHA Job #: L1408541

Project Information
Project Name: NBHS O&M
Project Location: NEW BEDFORD MA.
Project #: 115058
Project Manager: DAVID SULLIVAN, AL LEONARD
ALPHA Quote #:

Report Information - Data Deliverables
☑ ADEx ☑ EMAIL

Billing Information
☐ Same as Client info PO #: C115058

Client Information
Client: TRC
Address: 650 SUFFOLK ST, LOWELL MA
Phone: 978-970-5600
Email: DSULLIVAN / ALEONARD@TRCSOLUTIONS.COM

Regulatory Requirements & Project Information Requirements
☑ Yes ☐ No MA MCP Analytical Methods ☐ Yes ☐ No CT RCP Analytical Methods
☐ Yes ☐ No Matrix Spike Required on this SDG? (Required for MCP Inorganics)
☐ Yes ☐ No GW1 Standards (Info Required for Metals & EPH with Targets)
☐ Yes ☐ No NPDES RGP
☐ Other State /Fed Program ______ Criteria ______

Turn-Around Time
☑ Standard ☐ RUSH *(only confirmed if pre-approved!)*
Date Due: 4/30

Additional Project Information:

ANALYSIS
VOC: ☑ 8260 ☐ 624 ☐ 524.2
SVOC: ☐ ABN ☐ PAH
METALS: ☐ MCP 13 ☐ MCP 14 ☐ RCP 15 ☐ PP13
METALS: ☐ RCRA5 ☐ RCRA8
EPH: ☐ Ranges & Targets ☐ Ranges Only
VPH: ☐ Ranges & Targets ☐ Ranges Only
☑ PCB ☐ PEST
TPH: ☐ Quant Only ☐ Fingerprint

SAMPLE INFO
Filtration ☐ Field ☐ Lab to do
Preservation ☐ Lab to do

ALPHA Lab ID (Lab Use Only)	Sample ID	Collection Date	Collection Time	Sample Matrix	Sampler Initials	VOC 8260	PCB	Sample Comments	TOTAL # BOTTLES
08541-01	INFLUENT	4/21	12:30	I	JF	✓	✓		
02	INTRA-CARBON	4/21	12:45	XO	JF	✓	✓		
03	EFFLUENT	4/21	13:00	E	JF	✓	✓		
04	TRIP BLANK					✓			
Container Type						V	A		
Preservative						B	A		

Container Type: P= Plastic, A= Amber glass, V= Vial, G= Glass, B= Bacteria cup, C= Cube, O= Other, E= Encore, D= BOD Bottle

Preservative: A= None, B= HCl, C= HNO_3, D= H_2SO_4, E= NaOH, F= MeOH, G= $NaHSO_4$, H = $Na_2S_2O_3$, I= Ascorbic Acid, J = NH_4Cl, K= Zn Acetate, O= Other

Relinquished By:	Date/Time	Received By:	Date/Time
Jason C. Fierro	4/22	Nathan Smith	4/23 08:00
~~Nathan Smith~~	~~4/23~~	~~Nathan Smith~~	~~4/23~~
[signature]	4/23/14 10:09	[signature]	4/23/14 11:50
[signature]	4/23/14 1140	[signature]	4/23/14 1120

All samples submitted are subject to Alpha's Terms and Conditions. See reverse side.
FORM NO: 01-01 (rev. 12-Mar-2012)

CALLS

Call 57605
Date/Time 04/24/14 13:11
Call Type Live Voice
Operator MGULLI
Status Need Done
Status Date 04/24/14 13:11

Contact:
Company: TRC Environmental Consultants
Courier Fee: T.A.T.:

Call is in reference to:
Acct: TRC-LOW-M
Alpha Project #: 115058
Client's Project Name:
Login: L1408541

Credit Status View Report

Street Wannalancit Mills
650 Suffolk Street
City Lowell
State MA Zip 01854

	Area code	Number	Ext.
Phone	978	656 3577	
Fax	978	453 1995	

E mail edenly@trcsolutions.com

Calltracker report Print Label

Call Details

Bottle Order Intro Package Change Order Complaint Compliment Quote
Courier Request PIF Expedite T/A Job Status Report Billing
Suggestion

eonard, Alfred

11:39 AM (1 hour ago)

Reply
to me, Matthew, Jason, Jason
Melissa:

Please hold the intra-carbon samples until we get our other results. It is unlikely that we will want to analyze these.

Thanks.

New Call < > Query Save Close

7A
Volatile Organics CONTINUING CALIBRATION CHECK

Lab Name: Alpha Analytical Labs

SDG No.: L1408541

Instrument ID: Quimby.i Calibration Date: 29-APR-2014 Time: 05:39

Lab File ID: 0429A01 Init. Calib. Date(s): 24-MAR-2 24-MAR-2

Sample No: 8260 CCAL Init. Calib. Times : 06:07 13:28

Compound	RRF	RRF	MIN RRF	%D	MAX %D	
dichlorodifluoromethane	.37755	.46506	.1	23	20	F
chloromethane	.55134	.5892	.1	7	20	
vinyl chloride	.41894	.49794	.1	19	20	
bromomethane	.2956	.26486	.1	-10	20	
chloroethane	.32297	.3896	.1	21	20	F
trichlorofluoromethane	.69441	.8075	.1	16	20	
ethyl ether	.19311	.16807	.05	-13	20	
acrolein	.07673	.06378	.05	-17	20	
freon-113	.44236	.49245	.1	11	20	
acetone	100	93.305	.1	-7	20	
1,1,-dichloroethene	.42433	.43302	.1	2	20	
tert-butyl alcohol	.01716	.0155	.05	-10	20	F
iodomethane	.35707	.11959	.05	-67	20	F
methyl acetate	.21402	.20376	.01	-5	20	
methylene chloride	.4706	.49294	.1	5	20	
carbon disulfide	1.0746	1.0869	.1	1	20	
acrylonitrile	.1387	.1283	.05	-7	20	
methyl tert butyl ether	.83635	.72367	.1	-13	20	
Halothane	.34383	.36114	.05	5	20	
trans-1,2-dichloroethene	.46727	.48542	.1	4	20	
Diisopropyl Ether	1.7593	1.7745	.05	1	20	
vinyl acetate	.67567	.60265	.05	-11	20	
1,1-dichloroethane	.97574	1.006	.2	3	20	
Ethyl-Tert-Butyl-Ether	1.3260	1.2925	.05	-3	20	
2-butanone	.13501	.12789	.1	-5	20	
2,2-dichloropropane	100	82.773	.05	-17	20	
ethyl acetate	100	93.136	.05	-7	20	
cis-1,2-dichloroethene	.50063	.50758	.1	1	20	
chloroform	.81007	.84686	.2	5	20	
bromochloromethane	.20718	.21638	.05	4	20	
tetrahydrofuran	.08878	.07859	.05	-11	20	
1,1,1-trichloroethane	.67564	.68243	.1	1	20	
cyclohexane	1.1643	1.2514	.01	7	30	
1,1-dichloropropene	.69545	.71973	.05	3	20	
carbontetrachloride	100	91.748	.1	-8	20	
Tertiary-Amyl Methyl Ether	.87246	.78558	.05	-10	20	
1,2-dichloroethane	.63126	.66683	.1	6	20	
benzene	1.8091	1.9053	.5	5	20	

FORM VII MCP-8260-10

7A
CONTINUING CALIBRATION CHECK

Lab Name: Alpha Analytical Labs

SDG No.: L1408541

Instrument ID: Quimby.i Calibration Date: 29-APR-2014 Time: 05:39

Lab File ID: 0429A01 Init. Calib. Date(s): 24-MAR-2 24-MAR-2

Sample No: 8260 CCAL Init. Calib. Times : 06:07 13:28

Compound	RRF	RRF	MIN RRF	%D	MAX %D	
trichloroethene	.49594	.51342	.2	4	20	
methyl cyclohexane	.84918	.88824	.01	5	30	
1,2-dichloropropane	.55529	.5559	.1	0	20	
bromodichloromethane	.57605	.55867	.2	-3	20	
1,4-dioxane	.00242	.00282	.05	16	20	F
dibromomethane	.2212	.22463	.05	2	20	
2-chloroethylvinyl ether	.18542	.10037	.05	-46	20	F
4-methyl-2-pentanone	.13235	.12045	.1	-9	20	
cis-1,3-dichloropropene	.61107	.57276	.2	-6	20	
toluene	1.5027	1.5758	.4	5	20	
ethyl-methacrylate	100	91.861	.01	-8	0	F
trans-1,3-dichloropropene	100	84.002	.1	-16	20	
2-hexanone	.24277	.22765	.1	-6	20	
1,1,2-trichloroethane	.33156	.33297	.1	0	20	
1,3-dichloropropane	.72477	.73556	.05	1	20	
tetrachloroethene	.65863	.71572	.2	9	20	
chlorodibromomethane	.43466	.41388	.1	-5	20	
1,2-dibromoethane	.3744	.38464	.1	3	20	
chlorobenzene	1.6152	1.7504	.5	8	20	
1,1,1,2-tetrachloroethane	.4734	.48933	.05	3	20	
ethyl benzene	2.8947	3.2057	.1	11	20	
p/m xylene	1.1089	1.2538	.1	13	20	
o xylene	1.0425	1.1575	.3	11	20	
styrene	1.6584	1.8755	.31	13	20	
isopropylbenzene	2.9108	3.2027	.1	10	20	
bromoform	.46063	.37795	.1	-18	20	
1,4-dichlorobutane	1.7893	1.6907	.01	-6	20	
1,1,2,2,-tetrachloroethane	.86592	.82677	.3	-5	20	
1,2,3-trichloropropane	.67315	.64793	.05	-4	20	
trans-1,4-dichloro-2-butene	.30126	.26725	.05	-11	20	
n-propylbenzene	6.3297	6.8618	.05	8	20	
bromobenzene	1.2513	1.3078	.05	5	20	
4-ethyltoluene	2.4079	2.6273	.05	9	20	
1,3,5-trimethybenzene	4.5406	4.9690	.05	9	20	
2-chlorotoluene	4.4212	4.7854	.05	8	20	
4-chorotoluene	4.0192	4.3318	.05	8	20	
tert-butylbenzene	3.9705	4.2028	.05	6	20	
1,2,4-trimethylbenzene	4.534	4.9720	.05	10	20	

FORM VII MCP-8260-10

7A
CONTINUING CALIBRATION CHECK

Lab Name: Alpha Analytical Labs

SDG No.: L1408541

Instrument ID: Quimby.i Calibration Date: 29-APR-2014 Time: 05:39

Lab File ID: 0429A01 Init. Calib. Date(s): 24-MAR-2 24-MAR-2

Sample No: 8260 CCAL Init. Calib. Times : 06:07 13:28

Compound	$\overline{RRF}$	RRF	MIN RRF	%D	MAX %D
sec-butylbenzene	5.7122	6.0674	.05	6	20
p-isopropyltoluene	4.6145	5.0554	.05	10	20
1,3-dichlorobenzene	2.4376	2.6097	.6	7	20
1,4-dichlorobenzene	2.4145	2.5864	.5	7	20
n-butylbenzene	4.7802	5.0007	.05	5	20
1,2,4,5-tetramethylbenezene	1.1426	1.2330	.05	8	20
1,2-dichlorobenzene	2.1445	2.2852	.4	7	20
p-diethylbenzene	1.5514	1.6606	.05	7	20
1,2-dibromo-3-chloropropane	100	85.613	.05	-14	20
1,3,5-trichlorobenzene	1.5677	1.6242	.01	4	30
1,2,4-trichlorobenzene	1.2023	1.1169	.2	-7	20
hexachlorobutadiene	.57952	.58029	.05	0	20
naphthalene	1.8973	1.5766	.05	-17	20
1,2,3-trichlorobenzene	.92302	.79908	.05	-13	20
dibromofluoromethane	.23494	.24844	.05	6	20
1,2-dichloroethane-d4	.28131	.30157	.05	7	20
toluene-d8	1.2871	1.3149	.05	2	20
4-bromofluorobenzene	1.0179	.99769	.05	-2	20

FORM VII MCP-8260-10

ANALYTICAL REPORT

Lab Number:	L1401584
Client:	TRC Environmental Consultants Wannalancit Mills 650 Suffolk Street Lowell, MA 01854
ATTN:	David Sullivan
Phone:	(978) 656-3565
Project Name:	NBHS IRA PSWS
Project Number:	115058
Report Date:	01/23/14

The original project report/data package is held by Alpha Analytical. This report/data package is paginated and should be reproduced only in its entirety. Alpha Analytical holds no responsibility for results and/or data that are not consistent with the original.

Certifications & Approvals: MA (M-MA086), NY (11148), CT (PH-0574), NH (2003), NJ NELAP (MA935), RI (LAO00065), ME (MA00086), PA (68-03671), USDA (Permit #P-330-11-00240), NC (666), TX (T104704476), DOD (L2217), US Army Corps of Engineers.

Eight Walkup Drive, Westborough, MA 01581-1019
508-898-9220 (Fax) 508-898-9193 800-624-9220 - www.alphalab.com

Project Name: NBHS IRA PSWS
Project Number: 115058

Lab Number: L1401584
Report Date: 01/23/14

Alpha Sample ID	Client ID	Sample Location	Collection Date/Time
L1401584-01	DRUM #1	NEW BEDFORD, MA	01/16/14 15:20
L1401584-02	DRUM #2	NEW BEDFORD, MA	01/16/14 15:50
L1401584-03	BAG FILTER #1	NEW BEDFORD, MA	01/16/14 16:00
L1401584-04	BAG FILTER #2	NEW BEDFORD, MA	01/16/14 16:05

Project Name: NBHS IRA PSWS **Lab Number:** L1401584

Project Number: 115058 **Report Date:** 01/23/14

MADEP MCP Response Action Analytical Report Certification

This form provides certifications for all samples performed by MCP methods. Please refer to the Sample Results and Container Information sections of this report for specification of MCP methods used for each analysis. The following questions pertain only to MCP Analytical Methods.

An affirmative response to questions A through F is required for "Presumptive Certainty" status		
A	Were all samples received in a condition consistent with those described on the Chain-of-Custody, properly preserved (including temperature) in the field or laboratory, and prepared/analyzed within method holding times?	YES
B	Were the analytical method(s) and all associated QC requirements specified in the selected CAM protocol(s) followed?	YES
C	Were all required corrective actions and analytical response actions specified in the selected CAM protocol(s) implemented for all identified performance standard non-conformances?	YES
D	Does the laboratory report comply with all the reporting requirements specified in CAM VII A, "Quality Assurance and Quality Control Guidelines for the Acquisition and Reporting of Analytical Data?"	YES
E a.	VPH, EPH, and APH Methods only: Was each method conducted without significant modification(s)? (Refer to the individual method(s) for a list of significant modifications).	N/A
E b.	APH and TO-15 Methods only: Was the complete analyte list reported for each method?	N/A
F	Were all applicable CAM protocol QC and performance standard non-conformances identified and evaluated in a laboratory narrative (including all "No" responses to Questions A through E)?	YES

A response to questions G, H and I is required for "Presumptive Certainty" status		
G	Were the reporting limits at or below all CAM reporting limits specified in the selected CAM protocol(s)?	NO
H	Were all QC performance standards specified in the CAM protocol(s) achieved?	NO
I	Were results reported for the complete analyte list specified in the selected CAM protocol(s)?	YES

For any questions answered "No", please refer to the case narrative section on the following page(s).

Please note that sample matrix information is located in the Sample Results section of this report.

Project Name: NBHS IRA PSWS **Lab Number:** L1401584
Project Number: 115058 **Report Date:** 01/23/14

Case Narrative

The samples were received in accordance with the Chain of Custody and no significant deviations were encountered during the preparation or analysis unless otherwise noted. Sample Receipt, Container Information, and the Chain of Custody are located at the back of the report.

Results contained within this report relate only to the samples submitted under this Alpha Lab Number and meet all of the requirements of NELAC, for all NELAC accredited parameters. The data presented in this report is organized by parameter (i.e. VOC, SVOC, etc.). Sample specific Quality Control data (i.e. Surrogate Spike Recovery) is reported at the end of the target analyte list for each individual sample, followed by the Laboratory Batch Quality Control at the end of each parameter. If a sample was re-analyzed or re-extracted due to a required quality control corrective action and if both sets of data are reported, the Laboratory ID of the re-analysis or re-extraction is designated with an "R" or "RE", respectively. When multiple Batch Quality Control elements are reported (e.g. more than one LCS), the associated samples for each element are noted in the grey shaded header line of each data table. Any Laboratory Batch, Sample Specific % recovery or RPD value that is outside the listed Acceptance Criteria is bolded in the report. Performance criteria for CAM and RCP methods allow for some LCS compound failures to occur and still be within method compliance. In these instances, the specific failures are not narrated but are noted in the associated QC table. This information is also incorporated in the Data Usability format for our Data Merger tool where it can be reviewed along with any associated usability implications. Soil/sediments, solids and tissues are reported on a dry weight basis unless otherwise noted. Definitions of all data qualifiers and acronyms used in this report are provided in the Glossary located at the back of the report.

In reference to questions H (CAM) or 4 (RCP) when "NO" is checked, the performance criteria for CAM and RCP methods allow for some quality control failures to occur and still be within method compliance. In these instances the specific failure is not narrated but noted in the associated QC table. The information is also incorporated in the Data Usability format of our Data Merger tool where it can be reviewed along with any associated usability implications.

Please see the associated ADEx data file for a comparison of laboratory reporting limits that were achieved with the regulatory Numerical Standards requested on the Chain of Custody.

HOLD POLICY
For samples submitted on hold, Alpha's policy is to hold samples (with the exception of Air canisters) free of charge for 21 calendar days from the date the project is completed. After 21 calendar days, we will dispose of all samples submitted including those put on hold unless you have contacted your Client Service Representative and made arrangements for Alpha to continue to hold the samples. Air canisters will be disposed after 3 business days from the date the project is completed.

Please contact Client Services at 800-624-9220 with any questions.

Project Name: NBHS IRA PSWS **Lab Number:** L1401584
Project Number: 115058 **Report Date:** 01/23/14

Case Narrative (continued)

MCP Related Narratives

Volatile Organics

L1401584-01 has elevated detection limits due to the dilution required by the elevated concentrations of target compounds in the sample.

In reference to question G:

L1401584-01: All of the target analytes, with the exception of Vinyl chloride, trans-1,2-Dichloroethene, Trichloroethene, cis-1,2-Dichloroethene, and 1,2,4-Trichlorobenzene, did not achieve the requested CAM reporting limits.

In reference to question H:

The WG666043-1 LCS recovery, associated with L1401584-01, is above the acceptance criteria (70-130%) for acetone (141%); however, it has been identified as a "difficult" analyte and is within the 40-160% acceptance limits. The results of the associated sample are reported; however, all positive detects are considered to have a potentially high bias for this compound.

The WG666043-1/-2 LCS/LCSD RPDs, associated with L1401584-01, are above the acceptance criteria (20%) for carbon tetrachloride (21%), trichlorofluoromethane (21%), and dichlorodifluoromethane (24%).

The WG666417-1/-2 LCS/LCSD recoveries, associated with L1401584-02, are above the individual acceptance criteria (70-130%) for acetone (131%/142%), but within the overall method allowances. The results of the associated sample are reported; however, all positive detects are considered to have a potentially high bias for this compound.

The WG666417-1/-2 LCS/LCSD RPDs, associated with L1401584-02, are above the acceptance criteria (20%) for carbon tetrachloride (26%), trichlorofluoromethane (24%), 1,1,1-trichloroethane (21%), vinyl chloride (26%), and dichlorodifluoromethane (31%).

The initial calibration, associated with L1401584-01 and -02, did not meet the method required minimum response factor on the lowest calibration standard for 1,4-dioxane (0.00198), as well as the average response factor for 1,4-dioxane. The initial calibration verification was outside acceptance criteria for dichlorodifluoromethane (66%), but within overall method criteria.

The continuing calibration standards, associated with L1401584-01 and -02, are outside the acceptance criteria for several compounds; however, they are within overall method allowances. Copies of the continuing

Project Name:	NBHS IRA PSWS	**Lab Number:**	L1401584
Project Number:	115058	**Report Date:**	01/23/14

Case Narrative (continued)

calibration standards are included as an addendum to this report.

I, the undersigned, attest under the pains and penalties of perjury that, to the best of my knowledge and belief and based upon my personal inquiry of those responsible for providing the information contained in this analytical report, such information is accurate and complete. This certificate of analysis is not complete unless this page accompanies any and all pages of this report.

Authorized Signature: Cynthia McQueen

Title: Technical Director/Representative

Date: 01/23/14

ORGANICS

VOLATILES

Project Name: NBHS IRA PSWS **Lab Number:** L1401584

Project Number: 115058 **Report Date:** 01/23/14

SAMPLE RESULTS

Lab ID:	L1401584-01 D	Date Collected:	01/16/14 15:20
Client ID:	DRUM #1	Date Received:	01/16/14
Sample Location:	NEW BEDFORD, MA	Field Prep:	Not Specified
Matrix:	Soil		
Analytical Method:	97,8260C		
Analytical Date:	01/21/14 18:01		
Analyst:	BN		
Percent Solids:	76%		

Parameter	Result	Qualifier	Units	RL	MDL	Dilution Factor
MCP Volatile Organics by 8260/5035 - Westborough Lab						
Methylene chloride	ND		ug/kg	2200	--	2
1,1-Dichloroethane	ND		ug/kg	320	--	2
Chloroform	ND		ug/kg	320	--	2
Carbon tetrachloride	ND		ug/kg	220	--	2
1,2-Dichloropropane	ND		ug/kg	760	--	2
Dibromochloromethane	ND		ug/kg	220	--	2
1,1,2-Trichloroethane	ND		ug/kg	320	--	2
Tetrachloroethene	ND		ug/kg	220	--	2
Chlorobenzene	ND		ug/kg	220	--	2
Trichlorofluoromethane	ND		ug/kg	870	--	2
1,2-Dichloroethane	ND		ug/kg	220	--	2
1,1,1-Trichloroethane	ND		ug/kg	220	--	2
Bromodichloromethane	ND		ug/kg	220	--	2
trans-1,3-Dichloropropene	ND		ug/kg	220	--	2
cis-1,3-Dichloropropene	ND		ug/kg	220	--	2
1,1-Dichloropropene	ND		ug/kg	870	--	2
Bromoform	ND		ug/kg	870	--	2
1,1,2,2-Tetrachloroethane	ND		ug/kg	220	--	2
Benzene	ND		ug/kg	220	--	2
Toluene	ND		ug/kg	320	--	2
Ethylbenzene	ND		ug/kg	220	--	2
Chloromethane	ND		ug/kg	870	--	2
Bromomethane	ND		ug/kg	430	--	2
Vinyl chloride	1500		ug/kg	430	--	2
Chloroethane	ND		ug/kg	430	--	2
1,1-Dichloroethene	ND		ug/kg	220	--	2
trans-1,2-Dichloroethene	19000		ug/kg	320	--	2
Trichloroethene	26000		ug/kg	220	--	2
1,2-Dichlorobenzene	ND		ug/kg	870	--	2
1,3-Dichlorobenzene	ND		ug/kg	870	--	2
1,4-Dichlorobenzene	ND		ug/kg	870	--	2

Project Name: NBHS IRA PSWS **Lab Number:** L1401584

Project Number: 115058 **Report Date:** 01/23/14

SAMPLE RESULTS

Lab ID: L1401584-01 D Date Collected: 01/16/14 15:20

Client ID: DRUM #1 Date Received: 01/16/14

Sample Location: NEW BEDFORD, MA Field Prep: Not Specified

Parameter	Result	Qualifier	Units	RL	MDL	Dilution Factor
MCP Volatile Organics by 8260/5035 - Westborough Lab						
Methyl tert butyl ether	ND		ug/kg	430	--	2
p/m-Xylene	ND		ug/kg	430	--	2
o-Xylene	ND		ug/kg	430	--	2
cis-1,2-Dichloroethene	30000		ug/kg	220	--	2
Dibromomethane	ND		ug/kg	870	--	2
1,2,3-Trichloropropane	ND		ug/kg	870	--	2
Styrene	ND		ug/kg	430	--	2
Dichlorodifluoromethane	ND		ug/kg	2200	--	2
Acetone	ND		ug/kg	7800	--	2
Carbon disulfide	ND		ug/kg	870	--	2
Methyl ethyl ketone	ND		ug/kg	2200	--	2
Methyl isobutyl ketone	ND		ug/kg	2200	--	2
2-Hexanone	ND		ug/kg	2200	--	2
Bromochloromethane	ND		ug/kg	870	--	2
Tetrahydrofuran	ND		ug/kg	870	--	2
2,2-Dichloropropane	ND		ug/kg	1100	--	2
1,2-Dibromoethane	ND		ug/kg	870	--	2
1,3-Dichloropropane	ND		ug/kg	870	--	2
1,1,1,2-Tetrachloroethane	ND		ug/kg	220	--	2
Bromobenzene	ND		ug/kg	1100	--	2
n-Butylbenzene	ND		ug/kg	220	--	2
sec-Butylbenzene	ND		ug/kg	220	--	2
tert-Butylbenzene	ND		ug/kg	870	--	2
o-Chlorotoluene	ND		ug/kg	870	--	2
p-Chlorotoluene	ND		ug/kg	870	--	2
1,2-Dibromo-3-chloropropane	ND		ug/kg	870	--	2
Hexachlorobutadiene	ND		ug/kg	870	--	2
Isopropylbenzene	ND		ug/kg	220	--	2
p-Isopropyltoluene	ND		ug/kg	220	--	2
Naphthalene	ND		ug/kg	870	--	2
n-Propylbenzene	ND		ug/kg	220	--	2
1,2,3-Trichlorobenzene	ND		ug/kg	870	--	2
1,2,4-Trichlorobenzene	1200		ug/kg	870	--	2
1,3,5-Trimethylbenzene	ND		ug/kg	870	--	2
1,2,4-Trimethylbenzene	ND		ug/kg	870	--	2
Diethyl ether	ND		ug/kg	1100	--	2
Diisopropyl Ether	ND		ug/kg	870	--	2
Ethyl-Tert-Butyl-Ether	ND		ug/kg	870	--	2
Tertiary-Amyl Methyl Ether	ND		ug/kg	870	--	2

Project Name: NBHS IRA PSWS **Lab Number:** L1401584

Project Number: 115058 **Report Date:** 01/23/14

SAMPLE RESULTS

Lab ID: L1401584-01 D Date Collected: 01/16/14 15:20

Client ID: DRUM #1 Date Received: 01/16/14

Sample Location: NEW BEDFORD, MA Field Prep: Not Specified

Parameter	Result	Qualifier	Units	RL	MDL	Dilution Factor
MCP Volatile Organics by 8260/5035 - Westborough Lab						
1,4-Dioxane	ND		ug/kg	22000	--	2

Surrogate	% Recovery	Qualifier	Acceptance Criteria
1,2-Dichloroethane-d4	88		70-130
Toluene-d8	93		70-130
4-Bromofluorobenzene	100		70-130
Dibromofluoromethane	97		70-130

Project Name: NBHS IRA PSWS **Lab Number:** L1401584

Project Number: 115058 **Report Date:** 01/23/14

SAMPLE RESULTS

Lab ID:	L1401584-02	Date Collected:	01/16/14 15:50
Client ID:	DRUM #2	Date Received:	01/16/14
Sample Location:	NEW BEDFORD, MA	Field Prep:	Not Specified
Matrix:	Soil		
Analytical Method:	97,8260C		
Analytical Date:	01/22/14 11:12		
Analyst:	BN		
Percent Solids:	24%		

Parameter	Result	Qualifier	Units	RL	MDL	Dilution Factor
MCP Volatile Organics by 8260/5035 - Westborough Lab						
Methylene chloride	ND		ug/kg	46	--	1
1,1-Dichloroethane	ND		ug/kg	7.0	--	1
Chloroform	ND		ug/kg	7.0	--	1
Carbon tetrachloride	ND		ug/kg	4.6	--	1
1,2-Dichloropropane	ND		ug/kg	16	--	1
Dibromochloromethane	ND		ug/kg	4.6	--	1
1,1,2-Trichloroethane	ND		ug/kg	7.0	--	1
Tetrachloroethene	ND		ug/kg	4.6	--	1
Chlorobenzene	ND		ug/kg	4.6	--	1
Trichlorofluoromethane	ND		ug/kg	18	--	1
1,2-Dichloroethane	ND		ug/kg	4.6	--	1
1,1,1-Trichloroethane	ND		ug/kg	4.6	--	1
Bromodichloromethane	ND		ug/kg	4.6	--	1
trans-1,3-Dichloropropene	ND		ug/kg	4.6	--	1
cis-1,3-Dichloropropene	ND		ug/kg	4.6	--	1
1,1-Dichloropropene	ND		ug/kg	18	--	1
Bromoform	ND		ug/kg	18	--	1
1,1,2,2-Tetrachloroethane	ND		ug/kg	4.6	--	1
Benzene	ND		ug/kg	4.6	--	1
Toluene	ND		ug/kg	7.0	--	1
Ethylbenzene	ND		ug/kg	4.6	--	1
Chloromethane	ND		ug/kg	18	--	1
Bromomethane	ND		ug/kg	9.3	--	1
Vinyl chloride	ND		ug/kg	9.3	--	1
Chloroethane	ND		ug/kg	9.3	--	1
1,1-Dichloroethene	ND		ug/kg	4.6	--	1
trans-1,2-Dichloroethene	ND		ug/kg	7.0	--	1
Trichloroethene	ND		ug/kg	4.6	--	1
1,2-Dichlorobenzene	ND		ug/kg	18	--	1
1,3-Dichlorobenzene	ND		ug/kg	18	--	1
1,4-Dichlorobenzene	ND		ug/kg	18	--	1

Project Name: NBHS IRA PSWS **Lab Number:** L1401584

Project Number: 115058 **Report Date:** 01/23/14

SAMPLE RESULTS

Lab ID: L1401584-02 Date Collected: 01/16/14 15:50

Client ID: DRUM #2 Date Received: 01/16/14

Sample Location: NEW BEDFORD, MA Field Prep: Not Specified

Parameter	Result	Qualifier	Units	RL	MDL	Dilution Factor
MCP Volatile Organics by 8260/5035 - Westborough Lab						
Methyl tert butyl ether	ND		ug/kg	9.3	--	1
p/m-Xylene	ND		ug/kg	9.3	--	1
o-Xylene	ND		ug/kg	9.3	--	1
cis-1,2-Dichloroethene	ND		ug/kg	4.6	--	1
Dibromomethane	ND		ug/kg	18	--	1
1,2,3-Trichloropropane	ND		ug/kg	18	--	1
Styrene	ND		ug/kg	9.3	--	1
Dichlorodifluoromethane	ND		ug/kg	46	--	1
Acetone	ND		ug/kg	170	--	1
Carbon disulfide	ND		ug/kg	18	--	1
Methyl ethyl ketone	ND		ug/kg	46	--	1
Methyl isobutyl ketone	ND		ug/kg	46	--	1
2-Hexanone	ND		ug/kg	46	--	1
Bromochloromethane	ND		ug/kg	18	--	1
Tetrahydrofuran	ND		ug/kg	18	--	1
2,2-Dichloropropane	ND		ug/kg	23	--	1
1,2-Dibromoethane	ND		ug/kg	18	--	1
1,3-Dichloropropane	ND		ug/kg	18	--	1
1,1,1,2-Tetrachloroethane	ND		ug/kg	4.6	--	1
Bromobenzene	ND		ug/kg	23	--	1
n-Butylbenzene	ND		ug/kg	4.6	--	1
sec-Butylbenzene	ND		ug/kg	4.6	--	1
tert-Butylbenzene	ND		ug/kg	18	--	1
o-Chlorotoluene	ND		ug/kg	18	--	1
p-Chlorotoluene	ND		ug/kg	18	--	1
1,2-Dibromo-3-chloropropane	ND		ug/kg	18	--	1
Hexachlorobutadiene	ND		ug/kg	18	--	1
Isopropylbenzene	ND		ug/kg	4.6	--	1
p-Isopropyltoluene	ND		ug/kg	4.6	--	1
Naphthalene	ND		ug/kg	18	--	1
n-Propylbenzene	ND		ug/kg	4.6	--	1
1,2,3-Trichlorobenzene	ND		ug/kg	18	--	1
1,2,4-Trichlorobenzene	ND		ug/kg	18	--	1
1,3,5-Trimethylbenzene	ND		ug/kg	18	--	1
1,2,4-Trimethylbenzene	ND		ug/kg	18	--	1
Diethyl ether	ND		ug/kg	23	--	1
Diisopropyl Ether	ND		ug/kg	18	--	1
Ethyl-Tert-Butyl-Ether	ND		ug/kg	18	--	1
Tertiary-Amyl Methyl Ether	ND		ug/kg	18	--	1

Project Name: NBHS IRA PSWS **Lab Number:** L1401584

Project Number: 115058 **Report Date:** 01/23/14

SAMPLE RESULTS

Lab ID:	L1401584-02	Date Collected:	01/16/14 15:50
Client ID:	DRUM #2	Date Received:	01/16/14
Sample Location:	NEW BEDFORD, MA	Field Prep:	Not Specified

Parameter	Result	Qualifier	Units	RL	MDL	Dilution Factor
MCP Volatile Organics by 8260/5035 - Westborough Lab						
1,4-Dioxane	ND		ug/kg	180	--	1

Surrogate	% Recovery	Qualifier	Acceptance Criteria
1,2-Dichloroethane-d4	83		70-130
Toluene-d8	104		70-130
4-Bromofluorobenzene	106		70-130
Dibromofluoromethane	93		70-130

Project Name: NBHS IRA PSWS **Lab Number:** L1401584

Project Number: 115058 **Report Date:** 01/23/14

Method Blank Analysis
Batch Quality Control

Analytical Method: 97,8260C
Analytical Date: 01/21/14 09:51
Analyst: BN

Parameter	Result	Qualifier	Units	RL	MDL
MCP Volatile Organics by 8260/5035 - Westborough Lab for sample(s): 01 Batch: WG666043-3					
Methylene chloride	ND		ug/kg	500	--
1,1-Dichloroethane	ND		ug/kg	75	--
Chloroform	ND		ug/kg	75	--
Carbon tetrachloride	ND		ug/kg	50	--
1,2-Dichloropropane	ND		ug/kg	180	--
Dibromochloromethane	ND		ug/kg	50	--
1,1,2-Trichloroethane	ND		ug/kg	75	--
Tetrachloroethene	ND		ug/kg	50	--
Chlorobenzene	ND		ug/kg	50	--
Trichlorofluoromethane	ND		ug/kg	200	--
1,2-Dichloroethane	ND		ug/kg	50	--
1,1,1-Trichloroethane	ND		ug/kg	50	--
Bromodichloromethane	ND		ug/kg	50	--
trans-1,3-Dichloropropene	ND		ug/kg	50	--
cis-1,3-Dichloropropene	ND		ug/kg	50	--
1,1-Dichloropropene	ND		ug/kg	200	--
Bromoform	ND		ug/kg	200	--
1,1,2,2-Tetrachloroethane	ND		ug/kg	50	--
Benzene	ND		ug/kg	50	--
Toluene	ND		ug/kg	75	--
Ethylbenzene	ND		ug/kg	50	--
Chloromethane	ND		ug/kg	200	--
Bromomethane	ND		ug/kg	100	--
Vinyl chloride	ND		ug/kg	100	--
Chloroethane	ND		ug/kg	100	--
1,1-Dichloroethene	ND		ug/kg	50	--
trans-1,2-Dichloroethene	ND		ug/kg	75	--
Trichloroethene	ND		ug/kg	50	--
1,2-Dichlorobenzene	ND		ug/kg	200	--
1,3-Dichlorobenzene	ND		ug/kg	200	--
1,4-Dichlorobenzene	ND		ug/kg	200	--

Project Name: NBHS IRA PSWS **Lab Number:** L1401584

Project Number: 115058 **Report Date:** 01/23/14

Method Blank Analysis
Batch Quality Control

Analytical Method: 97,8260C
Analytical Date: 01/21/14 09:51
Analyst: BN

Parameter	Result	Qualifier	Units	RL	MDL
MCP Volatile Organics by 8260/5035 - Westborough Lab for sample(s): 01 Batch: WG666043-3					
Methyl tert butyl ether	ND		ug/kg	100	--
p/m-Xylene	ND		ug/kg	100	--
o-Xylene	ND		ug/kg	100	--
cis-1,2-Dichloroethene	ND		ug/kg	50	--
Dibromomethane	ND		ug/kg	200	--
1,2,3-Trichloropropane	ND		ug/kg	200	--
Styrene	ND		ug/kg	100	--
Dichlorodifluoromethane	ND		ug/kg	500	--
Acetone	ND		ug/kg	1800	--
Carbon disulfide	ND		ug/kg	200	--
Methyl ethyl ketone	ND		ug/kg	500	--
Methyl isobutyl ketone	ND		ug/kg	500	--
2-Hexanone	ND		ug/kg	500	--
Bromochloromethane	ND		ug/kg	200	--
Tetrahydrofuran	ND		ug/kg	200	--
2,2-Dichloropropane	ND		ug/kg	250	--
1,2-Dibromoethane	ND		ug/kg	200	--
1,3-Dichloropropane	ND		ug/kg	200	--
1,1,1,2-Tetrachloroethane	ND		ug/kg	50	--
Bromobenzene	ND		ug/kg	250	--
n-Butylbenzene	ND		ug/kg	50	--
sec-Butylbenzene	ND		ug/kg	50	--
tert-Butylbenzene	ND		ug/kg	200	--
o-Chlorotoluene	ND		ug/kg	200	--
p-Chlorotoluene	ND		ug/kg	200	--
1,2-Dibromo-3-chloropropane	ND		ug/kg	200	--
Hexachlorobutadiene	ND		ug/kg	200	--
Isopropylbenzene	ND		ug/kg	50	--
p-Isopropyltoluene	ND		ug/kg	50	--
Naphthalene	ND		ug/kg	200	--
n-Propylbenzene	ND		ug/kg	50	--

Project Name: NBHS IRA PSWS **Lab Number:** L1401584

Project Number: 115058 **Report Date:** 01/23/14

Method Blank Analysis
Batch Quality Control

Analytical Method: 97,8260C
Analytical Date: 01/21/14 09:51
Analyst: BN

Parameter	Result	Qualifier	Units	RL	MDL
MCP Volatile Organics by 8260/5035 - Westborough Lab for sample(s): 01 Batch: WG666043-3					
1,2,3-Trichlorobenzene	ND		ug/kg	200	--
1,2,4-Trichlorobenzene	ND		ug/kg	200	--
1,3,5-Trimethylbenzene	ND		ug/kg	200	--
1,2,4-Trimethylbenzene	ND		ug/kg	200	--
Diethyl ether	ND		ug/kg	250	--
Diisopropyl Ether	ND		ug/kg	200	--
Ethyl-Tert-Butyl-Ether	ND		ug/kg	200	--
Tertiary-Amyl Methyl Ether	ND		ug/kg	200	--
1,4-Dioxane	ND		ug/kg	5000	--

Surrogate	%Recovery	Qualifier	Acceptance Criteria
1,2-Dichloroethane-d4	90		70-130
Toluene-d8	96		70-130
4-Bromofluorobenzene	100		70-130
Dibromofluoromethane	95		70-130

Project Name: NBHS IRA PSWS **Lab Number:** L1401584

Project Number: 115058 **Report Date:** 01/23/14

Method Blank Analysis
Batch Quality Control

Analytical Method: 97,8260C
Analytical Date: 01/22/14 10:17
Analyst: BN

Parameter	Result	Qualifier	Units	RL	MDL
MCP Volatile Organics by 8260/5035 - Westborough Lab for sample(s): 02 Batch: WG666417-3					
Methylene chloride	ND		ug/kg	10	--
1,1-Dichloroethane	ND		ug/kg	1.5	--
Chloroform	ND		ug/kg	1.5	--
Carbon tetrachloride	ND		ug/kg	1.0	--
1,2-Dichloropropane	ND		ug/kg	3.5	--
Dibromochloromethane	ND		ug/kg	1.0	--
1,1,2-Trichloroethane	ND		ug/kg	1.5	--
Tetrachloroethene	ND		ug/kg	1.0	--
Chlorobenzene	ND		ug/kg	1.0	--
Trichlorofluoromethane	ND		ug/kg	4.0	--
1,2-Dichloroethane	ND		ug/kg	1.0	--
1,1,1-Trichloroethane	ND		ug/kg	1.0	--
Bromodichloromethane	ND		ug/kg	1.0	--
trans-1,3-Dichloropropene	ND		ug/kg	1.0	--
cis-1,3-Dichloropropene	ND		ug/kg	1.0	--
1,1-Dichloropropene	ND		ug/kg	4.0	--
Bromoform	ND		ug/kg	4.0	--
1,1,2,2-Tetrachloroethane	ND		ug/kg	1.0	--
Benzene	ND		ug/kg	1.0	--
Toluene	ND		ug/kg	1.5	--
Ethylbenzene	ND		ug/kg	1.0	--
Chloromethane	ND		ug/kg	4.0	--
Bromomethane	ND		ug/kg	2.0	--
Vinyl chloride	ND		ug/kg	2.0	--
Chloroethane	ND		ug/kg	2.0	--
1,1-Dichloroethene	ND		ug/kg	1.0	--
trans-1,2-Dichloroethene	ND		ug/kg	1.5	--
Trichloroethene	ND		ug/kg	1.0	--
1,2-Dichlorobenzene	ND		ug/kg	4.0	--
1,3-Dichlorobenzene	ND		ug/kg	4.0	--
1,4-Dichlorobenzene	ND		ug/kg	4.0	--

Project Name: NBHS IRA PSWS **Lab Number:** L1401584

Project Number: 115058 **Report Date:** 01/23/14

Method Blank Analysis
Batch Quality Control

Analytical Method: 97,8260C
Analytical Date: 01/22/14 10:17
Analyst: BN

Parameter	Result	Qualifier	Units	RL	MDL
MCP Volatile Organics by 8260/5035 - Westborough Lab for sample(s): 02 Batch: WG666417-3					
Methyl tert butyl ether	ND		ug/kg	2.0	--
p/m-Xylene	ND		ug/kg	2.0	--
o-Xylene	ND		ug/kg	2.0	--
cis-1,2-Dichloroethene	ND		ug/kg	1.0	--
Dibromomethane	ND		ug/kg	4.0	--
1,2,3-Trichloropropane	ND		ug/kg	4.0	--
Styrene	ND		ug/kg	2.0	--
Dichlorodifluoromethane	ND		ug/kg	10	--
Acetone	ND		ug/kg	36	--
Carbon disulfide	ND		ug/kg	4.0	--
Methyl ethyl ketone	ND		ug/kg	10	--
Methyl isobutyl ketone	ND		ug/kg	10	--
2-Hexanone	ND		ug/kg	10	--
Bromochloromethane	ND		ug/kg	4.0	--
Tetrahydrofuran	ND		ug/kg	4.0	--
2,2-Dichloropropane	ND		ug/kg	5.0	--
1,2-Dibromoethane	ND		ug/kg	4.0	--
1,3-Dichloropropane	ND		ug/kg	4.0	--
1,1,1,2-Tetrachloroethane	ND		ug/kg	1.0	--
Bromobenzene	ND		ug/kg	5.0	--
n-Butylbenzene	ND		ug/kg	1.0	--
sec-Butylbenzene	ND		ug/kg	1.0	--
tert-Butylbenzene	ND		ug/kg	4.0	--
o-Chlorotoluene	ND		ug/kg	4.0	--
p-Chlorotoluene	ND		ug/kg	4.0	--
1,2-Dibromo-3-chloropropane	ND		ug/kg	4.0	--
Hexachlorobutadiene	ND		ug/kg	4.0	--
Isopropylbenzene	ND		ug/kg	1.0	--
p-Isopropyltoluene	ND		ug/kg	1.0	--
Naphthalene	ND		ug/kg	4.0	--
n-Propylbenzene	ND		ug/kg	1.0	--

Project Name: NBHS IRA PSWS
Project Number: 115058

Lab Number: L1401584
Report Date: 01/23/14

Method Blank Analysis
Batch Quality Control

Analytical Method: 97,8260C
Analytical Date: 01/22/14 10:17
Analyst: BN

Parameter	Result	Qualifier	Units	RL	MDL
MCP Volatile Organics by 8260/5035 - Westborough Lab for sample(s): 02 Batch: WG666417-3					
1,2,3-Trichlorobenzene	ND		ug/kg	4.0	--
1,2,4-Trichlorobenzene	ND		ug/kg	4.0	--
1,3,5-Trimethylbenzene	ND		ug/kg	4.0	--
1,2,4-Trimethylbenzene	ND		ug/kg	4.0	--
Diethyl ether	ND		ug/kg	5.0	--
Diisopropyl Ether	ND		ug/kg	4.0	--
Ethyl-Tert-Butyl-Ether	ND		ug/kg	4.0	--
Tertiary-Amyl Methyl Ether	ND		ug/kg	4.0	--
1,4-Dioxane	ND		ug/kg	40	--

Surrogate	%Recovery	Qualifier	Acceptance Criteria
1,2-Dichloroethane-d4	86		70-130
Toluene-d8	95		70-130
4-Bromofluorobenzene	98		70-130
Dibromofluoromethane	93		70-130

Lab Control Sample Analysis
Batch Quality Control

Project Name: NBHS IRA PSWS
Project Number: 115058

Lab Number: L1401584
Report Date: 01/23/14

Parameter	LCS %Recovery	Qual	LCSD %Recovery	Qual	%Recovery Limits	RPD	Qual	RPD Limits
MCP Volatile Organics by 8260/5035 - Westborough Lab Associated sample(s): 01 Batch: WG666043-1 WG666043-2								
Methylene chloride	105		96		70-130	9		20
1,1-Dichloroethane	110		97		70-130	13		20
Chloroform	109		98		70-130	11		20
Carbon tetrachloride	111		90		70-130	**21**	Q	20
1,2-Dichloropropane	112		103		70-130	8		20
Dibromochloromethane	98		96		70-130	2		20
1,1,2-Trichloroethane	105		102		70-130	3		20
Tetrachloroethene	105		89		70-130	16		20
Chlorobenzene	106		96		70-130	10		20
Trichlorofluoromethane	114		92		70-130	**21**	Q	20
1,2-Dichloroethane	103		97		70-130	6		20
1,1,1-Trichloroethane	108		90		70-130	18		20
Bromodichloromethane	105		99		70-130	6		20
trans-1,3-Dichloropropene	102		97		70-130	5		20
cis-1,3-Dichloropropene	111		103		70-130	7		20
1,1-Dichloropropene	113		93		70-130	19		20
Bromoform	94		97		70-130	3		20
1,1,2,2-Tetrachloroethane	102		101		70-130	1		20
Benzene	114		99		70-130	14		20
Toluene	107		96		70-130	11		20
Ethylbenzene	107		93		70-130	14		20

Lab Control Sample Analysis
Batch Quality Control

Project Name: NBHS IRA PSWS
Project Number: 115058

Lab Number: L1401584
Report Date: 01/23/14

Parameter	LCS %Recovery	Qual	LCSD %Recovery	Qual	%Recovery Limits	RPD	Qual	RPD Limits
MCP Volatile Organics by 8260/5035 - Westborough Lab Associated sample(s): 01 Batch: WG666043-1 WG666043-2								
Chloromethane	114		96		70-130	17		20
Bromomethane	124		107		70-130	15		20
Vinyl chloride	112		93		70-130	19		20
Chloroethane	107		92		70-130	15		20
1,1-Dichloroethene	116		95		70-130	20		20
trans-1,2-Dichloroethene	113		98		70-130	14		20
Trichloroethene	111		94		70-130	17		20
1,2-Dichlorobenzene	103		98		70-130	5		20
1,3-Dichlorobenzene	103		97		70-130	6		20
1,4-Dichlorobenzene	103		97		70-130	6		20
Methyl tert butyl ether	110		104		70-130	6		20
p/m-Xylene	107		94		70-130	13		20
o-Xylene	106		96		70-130	10		20
cis-1,2-Dichloroethene	114		101		70-130	12		20
Dibromomethane	109		104		70-130	5		20
1,2,3-Trichloropropane	101		101		70-130	0		20
Styrene	106		99		70-130	7		20
Dichlorodifluoromethane	120		94		70-130	**24**	Q	20
Acetone	**141**	Q	122		70-130	14		20
Carbon disulfide	111		92		70-130	19		20
Methyl ethyl ketone	102		99		70-130	3		20

Lab Control Sample Analysis
Batch Quality Control

Project Name: NBHS IRA PSWS
Project Number: 115058

Lab Number: L1401584
Report Date: 01/23/14

Parameter	LCS %Recovery	Qual	LCSD %Recovery	Qual	%Recovery Limits	RPD	Qual	RPD Limits
MCP Volatile Organics by 8260/5035 - Westborough Lab Associated sample(s): 01 Batch: WG666043-1 WG666043-2								
Methyl isobutyl ketone	110		104		70-130	6		20
2-Hexanone	101		95		70-130	6		20
Bromochloromethane	109		104		70-130	5		20
Tetrahydrofuran	113		95		70-130	17		20
2,2-Dichloropropane	107		91		70-130	16		20
1,2-Dibromoethane	104		99		70-130	5		20
1,3-Dichloropropane	104		99		70-130	5		20
1,1,1,2-Tetrachloroethane	101		94		70-130	7		20
Bromobenzene	103		99		70-130	4		20
n-Butylbenzene	106		93		70-130	13		20
sec-Butylbenzene	107		94		70-130	13		20
tert-Butylbenzene	104		94		70-130	10		20
o-Chlorotoluene	105		95		70-130	10		20
p-Chlorotoluene	103		97		70-130	6		20
1,2-Dibromo-3-chloropropane	96		95		70-130	1		20
Hexachlorobutadiene	103		92		70-130	11		20
Isopropylbenzene	102		94		70-130	8		20
p-Isopropyltoluene	105		93		70-130	12		20
Naphthalene	99		96		70-130	3		20
n-Propylbenzene	106		95		70-130	11		20
1,2,3-Trichlorobenzene	100		97		70-130	3		20

Lab Control Sample Analysis
Batch Quality Control

Project Name: NBHS IRA PSWS
Project Number: 115058
Lab Number: L1401584
Report Date: 01/23/14

Parameter	LCS %Recovery	Qual	LCSD %Recovery	Qual	%Recovery Limits	RPD	Qual	RPD Limits
MCP Volatile Organics by 8260/5035 - Westborough Lab Associated sample(s): 01 Batch: WG666043-1 WG666043-2								
1,2,4-Trichlorobenzene	100		99		70-130	1		20
1,3,5-Trimethylbenzene	104		96		70-130	8		20
1,2,4-Trimethylbenzene	105		96		70-130	9		20
Diethyl ether	102		98		70-130	4		20
Diisopropyl Ether	111		103		70-130	7		20
Ethyl-Tert-Butyl-Ether	114		106		70-130	7		20
Tertiary-Amyl Methyl Ether	117		109		70-130	7		20
1,4-Dioxane	111		109		70-130	2		20

Surrogate	LCS %Recovery	Qual	LCSD %Recovery	Qual	Acceptance Criteria
1,2-Dichloroethane-d4	91		93		70-130
Toluene-d8	96		97		70-130
4-Bromofluorobenzene	99		104		70-130
Dibromofluoromethane	98		98		70-130

Lab Control Sample Analysis
Batch Quality Control

Project Name: NBHS IRA PSWS
Project Number: 115058

Lab Number: L1401584
Report Date: 01/23/14

Parameter	LCS %Recovery	Qual	LCSD %Recovery	Qual	%Recovery Limits	RPD	Qual	RPD Limits
MCP Volatile Organics by 8260/5035 - Westborough Lab Associated sample(s): 02 Batch: WG666417-1 WG666417-2								
Methylene chloride	90		102		70-130	13		20
1,1-Dichloroethane	92		111		70-130	19		20
Chloroform	93		107		70-130	14		20
Carbon tetrachloride	83		108		70-130	**26**	Q	20
1,2-Dichloropropane	100		112		70-130	11		20
Dibromochloromethane	90		94		70-130	4		20
1,1,2-Trichloroethane	100		103		70-130	3		20
Tetrachloroethene	87		102		70-130	16		20
Chlorobenzene	94		103		70-130	9		20
Trichlorofluoromethane	82		104		70-130	**24**	Q	20
1,2-Dichloroethane	90		95		70-130	5		20
1,1,1-Trichloroethane	84		104		70-130	**21**	Q	20
Bromodichloromethane	92		104		70-130	12		20
trans-1,3-Dichloropropene	90		92		70-130	2		20
cis-1,3-Dichloropropene	102		109		70-130	7		20
1,1-Dichloropropene	90		110		70-130	20		20
Bromoform	85		88		70-130	3		20
1,1,2,2-Tetrachloroethane	95		99		70-130	4		20
Benzene	98		111		70-130	12		20
Toluene	94		105		70-130	11		20
Ethylbenzene	92		104		70-130	12		20

Lab Control Sample Analysis
Batch Quality Control

Project Name: NBHS IRA PSWS
Project Number: 115058

Lab Number: L1401584
Report Date: 01/23/14

Parameter	LCS %Recovery	Qual	LCSD %Recovery	Qual	%Recovery Limits	RPD	Qual	RPD Limits
MCP Volatile Organics by 8260/5035 - Westborough Lab Associated sample(s): 02 Batch: WG666417-1 WG666417-2								
Chloromethane	92		107		70-130	15		20
Bromomethane	95		114		70-130	18		20
Vinyl chloride	83		108		70-130	**26**	Q	20
Chloroethane	82		98		70-130	18		20
1,1-Dichloroethene	88		108		70-130	20		20
trans-1,2-Dichloroethene	91		111		70-130	20		20
Trichloroethene	92		108		70-130	16		20
1,2-Dichlorobenzene	93		97		70-130	4		20
1,3-Dichlorobenzene	92		101		70-130	9		20
1,4-Dichlorobenzene	92		101		70-130	9		20
Methyl tert butyl ether	94		103		70-130	9		20
p/m-Xylene	93		104		70-130	11		20
o-Xylene	92		105		70-130	13		20
cis-1,2-Dichloroethene	98		113		70-130	14		20
Dibromomethane	95		107		70-130	12		20
1,2,3-Trichloropropane	94		97		70-130	3		20
Styrene	93		100		70-130	7		20
Dichlorodifluoromethane	83		113		70-130	**31**	Q	20
Acetone	**131**	Q	**142**	Q	70-130	8		20
Carbon disulfide	85		104		70-130	20		20
Methyl ethyl ketone	107		111		70-130	4		20

Lab Control Sample Analysis
Batch Quality Control

Project Name: NBHS IRA PSWS
Project Number: 115058

Lab Number: L1401584
Report Date: 01/23/14

Parameter	LCS %Recovery	Qual	LCSD %Recovery	Qual	%Recovery Limits	RPD	Qual	RPD Limits
MCP Volatile Organics by 8260/5035 - Westborough Lab Associated sample(s): 02 Batch: WG666417-1 WG666417-2								
Methyl isobutyl ketone	102		104		70-130	2		20
2-Hexanone	96		102		70-130	6		20
Bromochloromethane	98		108		70-130	10		20
Tetrahydrofuran	97		106		70-130	9		20
2,2-Dichloropropane	85		104		70-130	20		20
1,2-Dibromoethane	95		99		70-130	4		20
1,3-Dichloropropane	96		100		70-130	4		20
1,1,1,2-Tetrachloroethane	90		98		70-130	9		20
Bromobenzene	94		100		70-130	6		20
n-Butylbenzene	86		103		70-130	18		20
sec-Butylbenzene	90		103		70-130	13		20
tert-Butylbenzene	87		102		70-130	16		20
o-Chlorotoluene	94		101		70-130	7		20
p-Chlorotoluene	93		102		70-130	9		20
1,2-Dibromo-3-chloropropane	87		90		70-130	3		20
Hexachlorobutadiene	88		101		70-130	14		20
Isopropylbenzene	88		100		70-130	13		20
p-Isopropyltoluene	88		103		70-130	16		20
Naphthalene	93		97		70-130	4		20
n-Propylbenzene	91		104		70-130	13		20
1,2,3-Trichlorobenzene	95		100		70-130	5		20

Lab Control Sample Analysis
Batch Quality Control

Project Name: NBHS IRA PSWS
Project Number: 115058

Lab Number: L1401584
Report Date: 01/23/14

Parameter	LCS %Recovery	Qual	LCSD %Recovery	Qual	%Recovery Limits	RPD	Qual	RPD Limits
MCP Volatile Organics by 8260/5035 - Westborough Lab Associated sample(s): 02 Batch: WG666417-1 WG666417-2								
1,2,4-Trichlorobenzene	93		99		70-130	6		20
1,3,5-Trimethylbenzene	92		103		70-130	11		20
1,2,4-Trimethylbenzene	92		102		70-130	10		20
Diethyl ether	88		92		70-130	4		20
Diisopropyl Ether	95		110		70-130	15		20
Ethyl-Tert-Butyl-Ether	100		110		70-130	10		20
Tertiary-Amyl Methyl Ether	105		110		70-130	5		20
1,4-Dioxane	102		111		70-130	8		20

Surrogate	LCS %Recovery	Qual	LCSD %Recovery	Qual	Acceptance Criteria
1,2-Dichloroethane-d4	86		84		70-130
Toluene-d8	97		95		70-130
4-Bromofluorobenzene	99		99		70-130
Dibromofluoromethane	95		98		70-130

INORGANICS
&
MISCELLANEOUS

Project Name: NBHS IRA PSWS
Project Number: 115058

Lab Number: L1401584
Report Date: 01/23/14

SAMPLE RESULTS

Lab ID: L1401584-01
Client ID: DRUM #1
Sample Location: NEW BEDFORD, MA
Matrix: Soil

Date Collected: 01/16/14 15:20
Date Received: 01/16/14
Field Prep: Not Specified

Parameter	Result	Qualifier	Units	RL	MDL	Dilution Factor	Date Prepared	Date Analyzed	Analytical Method	Analyst
General Chemistry - Westborough Lab										
Solids, Total	75.8		%	0.100	NA	1	-	01/17/14 00:48	30,2540G	RT

Project Name: NBHS IRA PSWS
Project Number: 115058

Lab Number: L1401584
Report Date: 01/23/14

SAMPLE RESULTS

Lab ID: L1401584-02
Client ID: DRUM #2
Sample Location: NEW BEDFORD, MA
Matrix: Soil

Date Collected: 01/16/14 15:50
Date Received: 01/16/14
Field Prep: Not Specified

Parameter	Result	Qualifier	Units	RL	MDL	Dilution Factor	Date Prepared	Date Analyzed	Analytical Method	Analyst
General Chemistry - Westborough Lab										
Solids, Total	23.9		%	0.100	NA	1	-	01/17/14 00:48	30,2540G	RT

Lab Duplicate Analysis
Batch Quality Control

Project Name: NBHS IRA PSWS
Project Number: 115058

Lab Number: L1401584
Report Date: 01/23/14

Parameter	Native Sample	Duplicate Sample	Units	RPD	Qual	RPD Limits
General Chemistry - Westborough Lab Associated sample(s): 01-02 QC Batch ID: WG665203-1 QC Sample: L1401534-01 Client ID: DUP Sample						
Solids, Total	97.1	97.0	%	0		20

Project Name: NBHS IRA PSWS
Project Number: 115058

Lab Number: L1401584
Report Date: 01/23/14

Sample Receipt and Container Information

Were project specific reporting limits specified? YES

Reagent H2O Preserved Vials Frozen on: 01/16/2014 21:07

Cooler Information	Custody Seal
Cooler	
A	Absent
B	Absent

Container Information

Container ID	Container Type	Cooler	pH	Temp deg C	Pres	Seal	Analysis(*)
L1401584-01A	Vial MeOH preserved	A	N/A	4	Y	Absent	MCP-8260HLW-10(14)
L1401584-01B	Vial water preserved	A	N/A	4	Y	Absent	MCP-8260HLW-10(14)
L1401584-01C	Vial water preserved	A	N/A	4	Y	Absent	MCP-8260HLW-10(14)
L1401584-01D	Plastic 2oz unpreserved for TS	A	N/A	4	Y	Absent	TS(7)
L1401584-02A	Vial MeOH preserved	A	N/A	4	Y	Absent	MCP-8260HLW-10(14)
L1401584-02B	Vial water preserved	A	N/A	4	Y	Absent	MCP-8260HLW-10(14)
L1401584-02C	Vial water preserved	A	N/A	4	Y	Absent	MCP-8260HLW-10(14)
L1401584-02D	Plastic 2oz unpreserved for TS	A	N/A	4	Y	Absent	TS(7)
L1401584-03A	Bag	B	N/A	6	Y	Absent	HOLD(14)
L1401584-04A	Bag	B	N/A	6	Y	Absent	HOLD(14)

*Values in parentheses indicate holding time in days

Project Name:	NBHS IRA PSWS	**Lab Number:**	L1401584
Project Number:	115058	**Report Date:**	01/23/14

GLOSSARY

Acronyms

EDL	- Estimated Detection Limit: This value represents the level to which target analyte concentrations are reported as estimated values, when those target analyte concentrations are quantified below the reporting limit (RL). The EDL includes any adjustments from dilutions, concentrations or moisture content, where applicable. The use of EDLs is specific to the analysis of PAHs using Solid-Phase Microextraction (SPME).
EPA	- Environmental Protection Agency.
LCS	- Laboratory Control Sample: A sample matrix, free from the analytes of interest, spiked with verified known amounts of analytes or a material containing known and verified amounts of analytes.
LCSD	- Laboratory Control Sample Duplicate: Refer to LCS.
LFB	- Laboratory Fortified Blank: A sample matrix, free from the analytes of interest, spiked with verified known amounts of analytes or a material containing known and verified amounts of analytes.
MDL	- Method Detection Limit: This value represents the level to which target analyte concentrations are reported as estimated values, when those target analyte concentrations are quantified below the reporting limit (RL). The MDL includes any adjustments from dilutions, concentrations or moisture content, where applicable.
MS	- Matrix Spike Sample: A sample prepared by adding a known mass of target analyte to a specified amount of matrix sample for which an independent estimate of target analyte concentration is available.
MSD	- Matrix Spike Sample Duplicate: Refer to MS.
NA	- Not Applicable.
NC	- Not Calculated: Term is utilized when one or more of the results utilized in the calculation are non-detect at the parameter's reporting unit.
NI	- Not Ignitable.
RL	- Reporting Limit: The value at which an instrument can accurately measure an analyte at a specific concentration. The RL includes any adjustments from dilutions, concentrations or moisture content, where applicable.
RPD	- Relative Percent Difference: The results from matrix and/or matrix spike duplicates are primarily designed to assess the precision of analytical results in a given matrix and are expressed as relative percent difference (RPD). Values which are less than five times the reporting limit for any individual parameter are evaluated by utilizing the absolute difference between the values; although the RPD value will be provided in the report.
SRM	- Standard Reference Material: A reference sample of a known or certified value that is of the same or similar matrix as the associated field samples.

Footnotes

1	- The reference for this analyte should be considered modified since this analyte is absent from the target analyte list of the original method.

Terms

Analytical Method: Both the document from which the method originates and the analytical reference method. (Example: EPA 8260B is shown as 1,8260B.) The codes for the reference method documents are provided in the References section of the Addendum.

Data Qualifiers

A	- Spectra identified as "Aldol Condensation Product".
B	- The analyte was detected above the reporting limit in the associated method blank. Flag only applies to associated field samples that have detectable concentrations of the analyte at less than ten times (10x) the concentration found in the blank. For MCP-related projects, flag only applies to associated field samples that have detectable concentrations of the analyte at less than ten times (10x) the concentration found in the blank. For DOD-related projects, flag only applies to associated field samples that have detectable concentrations of the analyte at less than ten times (10x) the concentration found in the blank AND the analyte was detected above one-half the reporting limit (or above the reporting limit for common lab contaminants) in the associated method blank. For NJ-Air-related projects, flag only applies to associated field samples that have detectable concentrations of the analyte above the reporting limit.
C	- Co-elution: The target analyte co-elutes with a known lab standard (i.e. surrogate, internal standards, etc.) for co-extracted analyses.
D	- Concentration of analyte was quantified from diluted analysis. Flag only applies to field samples that have detectable concentrations of the analyte.
E	- Concentration of analyte exceeds the range of the calibration curve and/or linear range of the instrument.
G	- The concentration may be biased high due to matrix interferences (i.e, co-elution) with non-target compound(s). The result should be considered estimated.
H	- The analysis of pH was performed beyond the regulatory-required holding time of 15 minutes from the time of sample collection.
I	- The lower value for the two columns has been reported due to obvious interference.

Report Format: Data Usability Report

Project Name:	NBHS IRA PSWS	**Lab Number:**	L1401584
Project Number:	115058	**Report Date:**	01/23/14

Data Qualifiers

M - Reporting Limit (RL) exceeds the MCP CAM Reporting Limit for this analyte.

NJ - Presumptive evidence of compound. This represents an estimated concentration for Tentatively Identified Compounds (TICs), where the identification is based on a mass spectral library search.

P - The RPD between the results for the two columns exceeds the method-specified criteria.

Q - The quality control sample exceeds the associated acceptance criteria. For DOD-related projects, LCS and/or Continuing Calibration Standard exceedences are also qualified on all associated sample results. Note: This flag is not applicable for matrix spike recoveries when the sample concentration is greater than 4x the spike added or for batch duplicate RPD when the sample concentrations are less than 5x the RL. (Metals only.)

R - Analytical results are from sample re-analysis.

RE - Analytical results are from sample re-extraction.

S - Analytical results are from modified screening analysis.

Report Format: Data Usability Report

REFERENCES

30 Standard Methods for the Examination of Water and Wastewater. APHA-AWWA-WPCF. 18th Edition. 1992.

97 EPA Test Methods (SW-846) with QC Requirements & Performance Standards for the Analysis of EPA SW-846 Methods under the Massachusetts Contingency Plan, WSC-CAM-IIA, IIB, IIIA, IIIB, IIIC, IIID, VA, VB, VC, VIA, VIB, VIIIA and VIIIB, July 2010.

LIMITATION OF LIABILITIES

Alpha Analytical performs services with reasonable care and diligence normal to the analytical testing laboratory industry. In the event of an error, the sole and exclusive responsibility of Alpha Analytical shall be to re-perform the work at it's own expense. In no event shall Alpha Analytical be held liable for any incidental, consequential or special damages, including but not limited to, damages in any way connected with the use of, interpretation of, information or analysis provided by Alpha Analytical.

We strongly urge our clients to comply with EPA protocol regarding sample volume, preservation, cooling, containers, sampling procedures, holding time and splitting of samples in the field.

Certification Information

Last revised December 11, 2013

The following analytes are not included in our NELAP Scope of Accreditation:

Westborough Facility
EPA 524.2: Acetone, 2-Butanone (Methyl ethyl ketone (MEK)), Tert-butyl alcohol, 2-Hexanone, Tetrahydrofuran, 1,3,5-Trichlorobenzene, 4-Methyl-2-pentanone (MIBK), Carbon disulfide, Diethyl ether.
EPA 8260C: 1,2,4,5-Tetramethylbenzene, 4-Ethyltoluene, Iodomethane (methyl iodide), Methyl methacrylate, Azobenzene.
EPA 8330A/B: PETN, Picric Acid, Nitroglycerine, 2,6-DANT, 2,4-DANT.
EPA 8270D: 1-Methylnaphthalene, Dimethylnaphthalene,1,4-Diphenylhydrazine.
EPA 625: 4-Chloroaniline, 4-Methylphenol.
SM4500: Soil: Total Phosphorus, TKN, NO2, NO3.
EPA 9071: Total Petroleum Hydrocarbons, Oil & Grease.

Mansfield Facility
EPA 8270D: Biphenyl.
EPA TO-15: Halothane, 2,4,4-Trimethyl-2-pentene, 2,4,4-Trimethyl-1-pentene, Thiophene, 2-Methylthiophene, 3-Methylthiophene, 2-Ethylthiophene, 1,2,3-Trimethylbenzene, Indan, Indene, 1,2,4,5-Tetramethylbenzene, Benzothiophene, 1-Methylnaphthalene.

The following analytes are included in our Massachusetts DEP Scope of Accreditation, Westborough Facility:

Drinking Water
EPA 200.8: Sb,As,Ba,Be,Cd,Cr,Cu,Pb,Ni,Se,Tl; **EPA 200.7**: Ba,Be,Ca,Cd,Cr,Cu,Na; **EPA 245.1:** Mercury;
EPA 300.0: Nitrate-N, Fluoride, Sulfate; **EPA 353.2**: Nitrate-N, Nitrite-N; **SM4500NO3-F**: Nitrate-N, Nitrite-N; **SM4500F-C, SM4500CN-CE, EPA 180.1, SM2130B, SM4500Cl-D, SM2320B, SM2540C, SM4500H-B**
EPA 332: Perchlorate.
Microbiology: **SM9215B; SM9223-P/A, SM9223B-Colilert-QT, Enterolert-QT.**

Non-Potable Water
EPA 200.8: Al,Sb,As,Be,Cd,Cr,Cu,Pb,Mn,Ni,Se,Ag,Tl,Zn;
EPA 200.7: Al,Sb,As,Be,Cd,Ca,Cr,Co,Cu,Fe,Pb,Mg,Mn,Mo,Ni,K,Se,Ag,Na,Sr,Ti,Tl,V,Zn;
EPA 245.1, SM4500H,B, EPA 120.1, SM2510B, SM2540C, SM2340B, SM2320B, SM4500CL-E, SM4500F-BC, SM426C, SM4500NH3-BH, **EPA 350.1**: Ammonia-N, **LACHAT 10-107-06-1-B**: Ammonia-N, **SM4500NO3-F,**
EPA 353.2: Nitrate-N**, SM4500NH3-BC-NES, EPA 351.1, SM4500P-E, SM4500P-B, E, SM5220D, EPA 410.4, SM5210B, SM5310C, SM4500CL-D, EPA 1664, SM14 510AC, EPA 420.1, SM4500-CN-CE, SM2540D.**
EPA 624: Volatile Halocarbons & Aromatics,
EPA 608: Chlordane, Toxaphene, Aldrin, alpha-BHC, beta-BHC, gamma-BHC, delta-BHC, Dieldrin, DDD, DDE, DDT, Endosulfan I, Endosulfan II, Endosulfan sulfate, Endrin, Endrin Aldehyde, Heptachlor, Heptachlor Epoxide, PCBs
EPA 625: SVOC (Acid/Base/Neutral Extractables), **EPA 600/4-81-045**: PCB-Oil.
Microbiology: **SM9223B-Colilert-QT; Enterolert-QT, SM9222D-MF**.

For a complete listing of analytes and methods, please contact your Alpha Project Manager.

CHAIN OF CUSTODY

PAGE 1 OF 1

ALPHA ANALYTICAL — World Class Chemistry

8 Walkup Drive, Westboro, MA 01581, Tel: 508-898-9220
320 Forbes Blvd, Mansfield, MA 02048, Tel: 508-822-9300

Date Rec'd in Lab: 1/16/14

ALPHA Job #: L1401584

Client Information

Client: TRC

Address: 650 Suffolk St.
Lowell, MA 01854

Phone: 978-970-5600

Email: dsullivan@trcsolutions.com
alconard

Project Information

Project Name: NBHS IRA PSWS

Project Location: New Bedford, MA

Project #: 115058

Project Manager: AL LEONARD
★ DAVID SULLIVAN

ALPHA Quote #:

Turn-Around Time

☒ Standard ☐ RUSH (only confirmed if pre-approved!)

Date Due: 1/30/14

Report Information - Data Deliverables

☐ ADEx ☒ EMAIL

Billing Information

☐ Same as Client info PO #: C115058

Regulatory Requirements & Project Information Requirements

☒ Yes ☐ No MA MCP Analytical Methods ☐ Yes ☐ No CT RCP Analytical Methods
☐ Yes ☐ No Matrix Spike Required on this SDG? (Required for MCP Inorganics)
☐ Yes ☐ No GW1 Standards (Info Required for Metals & EPH with Targets)
☐ Yes ☐ No NPDES RGP
☐ Other State /Fed Program MA Criteria MCP

Additional Project Information:

★ HOLD for Jim Occhialini
△ Refer to 12/17/13 "Drum #1" and "Drum #2" Samples

ANALYSIS: VOC: ☒ 8260 ☐ 624 ☐ 524.2; SVOC: ☐ ABN ☐ PAH; METALS: ☐ MCP 13 ☐ MCP 14 ☐ RCP 15; METALS: ☐ RCRA5 ☐ RCRA8 ☐ PP13; EPH: ☐ Ranges & Targets ☐ Ranges Only; VPH: ☐ Ranges & Targets ☐ Ranges Only; ☐ PCB ☐ PEST; TPH: ☐ Quant Only ☐ Fingerprint

SAMPLE INFO
Filtration
☐ Field
☐ Lab to do
Preservation
☐ Lab to do

ALPHA Lab ID (Lab Use Only)	Sample ID	Collection Date	Collection Time	Sample Matrix	Sampler Initials	VOC	Sample Comments	TOTAL # BOTTLES
01584.1	Drum #1	1/16/14	1520	△	KDJ/SB	X		
.2	Drum #2	1/16/14	1550	△	KDJ/SB	X		
.3	Bag Filter #1 ★	1/16/14	1600	★	KDJ/SB	H		
.4	Bag Filter #2 ★	1/16/14	1605	★	KDJ/SB	H		

Container Type	V
Preservative	F/O

Container Type
P= Plastic
A= Amber glass
V= Vial
G= Glass
B= Bacteria cup
C= Cube
O= Other
E= Encore
D= BOD Bottle

Preservative
A= None
B= HCl
C= HNO_3
D= H_2SO_4
E= NaOH
F= MeOH
G= $NaHSO_4$
H = $Na_2S_2O_3$
I= Ascorbic Acid
J = NH_4Cl
K= Zn Acetate
O= Other

Relinquished By:	Date/Time	Received By:	Date/Time
Kevin [illegible]	1/16/14 16:47	MCW	1/16/14 1642
MCW	1/16/14 1735	[illegible]	1/16/14 17:35

All samples submitted are subject to Alpha's Terms and Conditions. See reverse side.

FORM NO: 01-01 (rev. 12-Mar-2012)

7A
Volatile Organics CONTINUING CALIBRATION CHECK

Lab Name: Alpha Analytical Labs

SDG No.: L1401584

Instrument ID: Voa104.i Calibration Date: 21-JAN-2014 Time: 08:57

Lab File ID: 0121B01 Init. Calib. Date(s): 08-JAN-2 08-JAN-2

Sample No: 8260 CCAL Init. Calib. Times : 11:30 14:13

Compound	RRF	RRF	MIN RRF	%D	MAX %D	
dichlorodifluoromethane	.23879	.28771	.1	20	20	F
chloromethane	.35487	.40294	.1	14	20	
vinyl chloride	.32286	.36226	.1	12	20	
bromomethane	.17802	.22054	.1	24	20	F
chloroethane	.17275	.18454	.1	7	20	
trichlorofluoromethane	.34474	.39256	.1	14	20	
ethyl ether	.12717	.13017	.05	2	20	
1,1,-dichloroethene	.25015	.29117	.1	16	20	
carbon disulfide	.84007	.93617	.1	11	20	
methylene chloride	.32032	.3361	.1	5	20	
acetone	100	141	.1	41	20	F
trans-1,2-dichloroethene	.29212	.33145	.1	13	20	
methyl tert butyl ether	.71095	.77956	.1	10	20	
Diisopropyl Ether	.98584	1.0958	.05	11	20	
1,1-dichloroethane	.54984	.608	.2	11	20	
Ethyl-Tert-Butyl-Ether	.93073	1.0609	.05	14	20	
cis-1,2-dichloroethene	.31597	.36142	.1	14	20	
2,2-dichloropropane	.43282	.46254	.05	7	20	
bromochloromethane	.16544	.18014	.05	9	20	
chloroform	.51287	.55956	.2	9	20	
carbontetrachloride	.40809	.45233	.1	11	20	
tetrahydrofuran	.08941	.10096	.05	13	20	
1,1,1-trichloroethane	.47924	.51577	.1	8	20	
2-butanone	.13396	.13695	.1	2	20	
1,1-dichloropropene	.37739	.42652	.05	13	20	
benzene	1.1036	1.2526	.5	14	20	
Tertiary-Amyl Methyl Ether	.68512	.80051	.05	17	20	
1,2-dichloroethane	.39955	.41177	.1	3	20	
trichloroethene	.3029	.33557	.2	11	20	
dibromomethane	.17793	.19357	.05	9	20	
1,2-dichloropropane	.30595	.34333	.1	12	20	
bromodichloromethane	.3956	.41724	.2	5	20	
1,4-dioxane	.00257	.00286	.05	11	20	F
cis-1,3-dichloropropene	.44194	.48975	.2	11	20	
toluene	.95268	1.0240	.4	7	20	
tetrachloroethene	.4792	.50501	.2	5	20	
4-methyl-2-pentanone	.10984	.12084	.1	10	20	
trans-1,3-dichloropropene	.51627	.52731	.1	2	20	

FORM VII MCP-8260HLW-10

7A
CONTINUING CALIBRATION CHECK

Lab Name: Alpha Analytical Labs

SDG No.: L1401584

Instrument ID: Voa104.i Calibration Date: 21-JAN-2014 Time: 08:57

Lab File ID: 0121B01 Init. Calib. Date(s): 08-JAN-2 08-JAN-2

Sample No: 8260 CCAL Init. Calib. Times : 11:30 14:13

Compound	$\overline{RRF}$	RRF	MIN RRF	%D	MAX %D
1,1,2-trichloroethane	.25425	.26776	.1	5	20
chlorodibromomethane	.43876	.43162	.1	-2	20
1,3-dichloropropane	.51455	.53669	.05	4	20
1,2-dibromoethane	.33974	.35188	.1	4	20
2-hexanone	.24749	.24931	.1	1	20
chlorobenzene	1.1275	1.1915	.5	6	20
ethyl benzene	1.8415	1.9752	.1	7	20
1,1,1,2-tetrachloroethane	.42418	.43022	.05	1	20
p/m xylene	.71345	.76546	.1	7	20
o xylene	.6915	.73084	.3	6	20
styrene	1.1338	1.2056	.3	6	20
bromoform	.53612	.50458	.1	-6	20
isopropylbenzene	3.3805	3.4342	.1	2	20
bromobenzene	.96043	.98541	.05	3	20
n-propylbenzene	3.7198	3.9254	.05	6	20
1,1,2,2,-tetrachloroethane	.74981	.76744	.3	2	20
2-chlorotoluene	2.4187	2.5410	.05	5	20
1,2,3-trichloropropane	.57659	.58099	.05	1	20
1,3,5-trimethybenzene	2.8416	2.9707	.05	5	20
4-chorotoluene	2.4130	2.4822	.05	3	20
tert-butylbenzene	2.5094	2.6231	.05	5	20
1,2,4-trimethylbenzene	2.7523	2.8837	.05	5	20
sec-butylbenzene	3.6209	3.8637	.05	7	20
p-isopropyltoluene	3.1788	3.3521	.05	5	20
1,3-dichlorobenzene	1.8146	1.8638	.6	3	20
1,4-dichlorobenzene	1.8146	1.8638	.5	3	20
n-butylbenzene	2.7345	2.8895	.05	6	20
1,2-dichlorobenzene	1.6845	1.7409	.4	3	20
1,2-dibromo-3-chloropropane	.13882	.13257	.05	-5	20
hexachlorobutadiene	.66387	.68494	.05	3	20
1,2,4-trichlorobenzene	1.2041	1.2039	.2	0	20
naphthalene	2.5719	2.5557	.05	-1	20
1,2,3-trichlorobenzene	1.1294	1.1286	.05	0	20
dibromofluoromethane	.27347	.26803	.05	-2	30
1,2-dichloroethane-d4	.26598	.24226	.05	-9	30
toluene-d8	1.2307	1.1824	.05	-4	30
4-bromofluorobenzene	.85219	.84093	.05	-1	30

FORM VII MCP-8260HLW-10

7A
CONTINUING CALIBRATION CHECK

Lab Name: Alpha Analytical Labs

SDG No.: L1401584

Instrument ID: Voa104.i Calibration Date: 22-JAN-2014 Time: 09:23

Lab File ID: 0122B01 Init. Calib. Date(s): 08-JAN-2 08-JAN-2

Sample No: 8260 CCAL Init. Calib. Times : 11:30 14:13

Compound	RRF	RRF	MIN RRF	%D	MAX %D	
dichlorodifluoromethane	.23879	.19828	.1	-17	20	
chloromethane	.35487	.32606	.1	-8	20	
vinyl chloride	.32286	.26922	.1	-17	20	
bromomethane	.17802	.1687	.1	-5	20	
chloroethane	.17275	.14131	.1	-18	20	
trichlorofluoromethane	.34474	.2837	.1	-18	20	
ethyl ether	.12717	.11211	.05	-12	20	
1,1,-dichloroethene	.25015	.22012	.1	-12	20	
carbon disulfide	.84007	.71183	.1	-15	20	
methylene chloride	.32032	.28862	.1	-10	20	
acetone	100	131	.1	31	20	F
trans-1,2-dichloroethene	.29212	.26685	.1	-9	20	
methyl tert butyl ether	.71095	.66512	.1	-6	20	
Diisopropyl Ether	.98584	.93451	.05	-5	20	
1,1-dichloroethane	.54984	.50343	.2	-8	20	
Ethyl-Tert-Butyl-Ether	.93073	.93118	.05	0	20	
cis-1,2-dichloroethene	.31597	.30964	.1	-2	20	
2,2-dichloropropane	.43282	.36712	.05	-15	20	
bromochloromethane	.16544	.16127	.05	-3	20	
chloroform	.51287	.47518	.2	-7	20	
carbontetrachloride	.40809	.33999	.1	-17	20	
tetrahydrofuran	.08941	.08683	.05	-3	20	
1,1,1-trichloroethane	.47924	.40501	.1	-15	20	
2-butanone	.13396	.14349	.1	7	20	
1,1-dichloropropene	.37739	.33941	.05	-10	20	
benzene	1.1036	1.0813	.5	-2	20	
Tertiary-Amyl Methyl Ether	.68512	.71759	.05	5	20	
1,2-dichloroethane	.39955	.36044	.1	-10	20	
trichloroethene	.3029	.27767	.2	-8	20	
dibromomethane	.17793	.16872	.05	-5	20	
1,2-dichloropropane	.30595	.3056	.1	0	20	
bromodichloromethane	.3956	.36257	.2	-8	20	
1,4-dioxane	.00257	.00264	.05	2	20	F
cis-1,3-dichloropropene	.44194	.45038	.2	2	20	
toluene	.95268	.8967	.4	-6	20	
tetrachloroethene	.4792	.41594	.2	-13	20	
4-methyl-2-pentanone	.10984	.11188	.1	2	20	
trans-1,3-dichloropropene	.51627	.46338	.1	-10	20	

FORM VII MCP-8260HLW-10

7A
CONTINUING CALIBRATION CHECK

Lab Name: Alpha Analytical Labs

SDG No.: L1401584

Instrument ID: Voa104.i Calibration Date: 22-JAN-2014 Time: 09:23

Lab File ID: 0122B01 Init. Calib. Date(s): 08-JAN-2 08-JAN-2

Sample No: 8260 CCAL Init. Calib. Times : 11:30 14:13

Compound	$\overline{RRF}$	RRF	MIN RRF	%D	MAX %D
1,1,2-trichloroethane	.25425	.25351	.1	0	20
chlorodibromomethane	.43876	.39569	.1	-10	20
1,3-dichloropropane	.51455	.49152	.05	-4	20
1,2-dibromoethane	.33974	.32305	.1	-5	20
2-hexanone	.24749	.2369	.1	-4	20
chlorobenzene	1.1275	1.0619	.5	-6	20
ethyl benzene	1.8415	1.6885	.1	-8	20
1,1,1,2-tetrachloroethane	.42418	.38337	.05	-10	20
p/m xylene	.71345	.66194	.1	-7	20
o xylene	.6915	.63847	.3	-8	20
styrene	1.1338	1.0561	.3	-7	20
bromoform	.53612	.45672	.1	-15	20
isopropylbenzene	3.3805	2.9723	.1	-12	20
bromobenzene	.96043	.90683	.05	-6	20
n-propylbenzene	3.7198	3.3973	.05	-9	20
1,1,2,2,-tetrachloroethane	.74981	.71363	.3	-5	20
2-chlorotoluene	2.4187	2.2711	.05	-6	20
1,2,3-trichloropropane	.57659	.53902	.05	-7	20
1,3,5-trimethybenzene	2.8416	2.6068	.05	-8	20
4-chorotoluene	2.4130	2.2446	.05	-7	20
tert-butylbenzene	2.5094	2.1871	.05	-13	20
1,2,4-trimethylbenzene	2.7523	2.5330	.05	-8	20
sec-butylbenzene	3.6209	3.2529	.05	-10	20
p-isopropyltoluene	3.1788	2.7920	.05	-12	20
1,3-dichlorobenzene	1.8146	1.6739	.6	-8	20
1,4-dichlorobenzene	1.8146	1.6739	.5	-8	20
n-butylbenzene	2.7345	2.3552	.05	-14	20
1,2-dichlorobenzene	1.6845	1.5601	.4	-7	20
1,2-dibromo-3-chloropropane	.13882	.1204	.05	-13	20
hexachlorobutadiene	.66387	.5819	.05	-12	20
1,2,4-trichlorobenzene	1.2041	1.1209	.2	-7	20
naphthalene	2.5719	2.3954	.05	-7	20
1,2,3-trichlorobenzene	1.1294	1.0698	.05	-5	20
dibromofluoromethane	.27347	.25863	.05	-5	30
1,2-dichloroethane-d4	.26598	.22855	.05	-14	30
toluene-d8	1.2307	1.1900	.05	-3	30
4-bromofluorobenzene	.85219	.84735	.05	-1	30

FORM VII MCP-8260HLW-10

QUARTERLY DISCHARGE MONITORING ANALYTICAL DATA

ANALYTICAL REPORT

Lab Number:	L1325663
Client:	TRC Environmental Consultants Wannalancit Mills 650 Suffolk Street Lowell, MA 01854
ATTN:	David Sullivan
Phone:	(978) 656-3565
Project Name:	NBHS IRA PSWS
Project Number:	115058
Report Date:	12/26/13

The original project report/data package is held by Alpha Analytical. This report/data package is paginated and should be reproduced only in its entirety. Alpha Analytical holds no responsibility for results and/or data that are not consistent with the original.

Certifications & Approvals: MA (M-MA086), NY (11148), CT (PH-0574), NH (2003), NJ NELAP (MA935), RI (LAO00065), ME (MA00086), PA (68-03671), USDA (Permit #P-330-11-00240), NC (666), TX (T104704476), DOD (L2217), US Army Corps of Engineers.

Eight Walkup Drive, Westborough, MA 01581-1019
508-898-9220 (Fax) 508-898-9193 800-624-9220 - www.alphalab.com

Project Name: NBHS IRA PSWS
Project Number: 115058

Lab Number: L1325663
Report Date: 12/26/13

Alpha Sample ID	Client ID	Sample Location	Collection Date/Time
L1325663-01	EFFLUENT (GRAB)	NEW BEDFORD, MA	12/18/13 07:30
L1325663-02	EFFLUENT (COMP)	NEW BEDFORD, MA	12/18/13 11:30
L1325663-03	EFFLUENT ROUND 1 THRU 4	NEW BEDFORD, MA	12/18/13 07:30

Project Name: NBHS IRA PSWS **Lab Number:** L1325663

Project Number: 115058 **Report Date:** 12/26/13

MADEP MCP Response Action Analytical Report Certification

This form provides certifications for all samples performed by MCP methods. Please refer to the Sample Results and Container Information sections of this report for specification of MCP methods used for each analysis. The following questions pertain only to MCP Analytical Methods.

An affirmative response to questions A through F is required for "Presumptive Certainty" status		
A	Were all samples received in a condition consistent with those described on the Chain-of-Custody, properly preserved (including temperature) in the field or laboratory, and prepared/analyzed within method holding times?	NO
B	Were the analytical method(s) and all associated QC requirements specified in the selected CAM protocol(s) followed?	NO
C	Were all required corrective actions and analytical response actions specified in the selected CAM protocol(s) implemented for all identified performance standard non-conformances?	YES
D	Does the laboratory report comply with all the reporting requirements specified in CAM VII A, "Quality Assurance and Quality Control Guidelines for the Acquisition and Reporting of Analytical Data?"	YES
E a.	VPH, EPH, and APH Methods only: Was each method conducted without significant modification(s)? (Refer to the individual method(s) for a list of significant modifications).	N/A
E b.	APH and TO-15 Methods only: Was the complete analyte list reported for each method?	N/A
F	Were all applicable CAM protocol QC and performance standard non-conformances identified and evaluated in a laboratory narrative (including all "No" responses to Questions A through E)?	YES

A response to questions G, H and I is required for "Presumptive Certainty" status		
G	Were the reporting limits at or below all CAM reporting limits specified in the selected CAM protocol(s)?	YES
H	Were all QC performance standards specified in the CAM protocol(s) achieved?	YES
I	Were results reported for the complete analyte list specified in the selected CAM protocol(s)?	NO

For any questions answered "No", please refer to the case narrative section on the following page(s).

Please note that sample matrix information is located in the Sample Results section of this report.

Project Name: NBHS IRA PSWS **Lab Number:** L1325663
Project Number: 115058 **Report Date:** 12/26/13

Case Narrative

The samples were received in accordance with the Chain of Custody and no significant deviations were encountered during the preparation or analysis unless otherwise noted. Sample Receipt, Container Information, and the Chain of Custody are located at the back of the report.

Results contained within this report relate only to the samples submitted under this Alpha Lab Number and meet all of the requirements of NELAC, for all NELAC accredited parameters. The data presented in this report is organized by parameter (i.e. VOC, SVOC, etc.). Sample specific Quality Control data (i.e. Surrogate Spike Recovery) is reported at the end of the target analyte list for each individual sample, followed by the Laboratory Batch Quality Control at the end of each parameter. If a sample was re-analyzed or re-extracted due to a required quality control corrective action and if both sets of data are reported, the Laboratory ID of the re-analysis or re-extraction is designated with an "R" or "RE", respectively. When multiple Batch Quality Control elements are reported (e.g. more than one LCS), the associated samples for each element are noted in the grey shaded header line of each data table. Any Laboratory Batch, Sample Specific % recovery or RPD value that is outside the listed Acceptance Criteria is bolded in the report. Performance criteria for CAM and RCP methods allow for some LCS compound failures to occur and still be within method compliance. In these instances, the specific failures are not narrated but are noted in the associated QC table. This information is also incorporated in the Data Usability format for our Data Merger tool where it can be reviewed along with any associated usability implications. Soil/sediments, solids and tissues are reported on a dry weight basis unless otherwise noted. Definitions of all data qualifiers and acronyms used in this report are provided in the Glossary located at the back of the report.

In reference to questions H (CAM) or 4 (RCP) when "NO" is checked, the performance criteria for CAM and RCP methods allow for some quality control failures to occur and still be within method compliance. In these instances the specific failure is not narrated but noted in the associated QC table. The information is also incorporated in the Data Usability format of our Data Merger tool where it can be reviewed along with any associated usability implications.

Please see the associated ADEx data file for a comparison of laboratory reporting limits that were achieved with the regulatory Numerical Standards requested on the Chain of Custody.

HOLD POLICY
For samples submitted on hold, Alpha's policy is to hold samples (with the exception of Air canisters) free of charge for 21 calendar days from the date the project is completed. After 21 calendar days, we will dispose of all samples submitted including those put on hold unless you have contacted your Client Service Representative and made arrangements for Alpha to continue to hold the samples. Air canisters will be disposed after 3 business days from the date the project is completed.

Please contact Client Services at 800-624-9220 with any questions.

Project Name: NBHS IRA PSWS **Lab Number:** L1325663
Project Number: 115058 **Report Date:** 12/26/13

Case Narrative (continued)

MCP Related Narratives

Volatile Organics

L1325663-01 and -03 have elevated detection limits due to the dilutions required by the elevated concentrations of target compounds in the samples.

In reference to question A:

L1325663-03 was analyzed with the method required holding time exceeded for Acrolein only, due to a laboratory oversight.

In reference to question B:

At the client's request, the analytical method specified in the CAM protocol was not followed.

In reference to question I:

All samples were analyzed for a subset of MCP compounds per the Chain of Custody.

PCBs

In reference to question B:

At the client's request, the analytical method specified in the CAM protocol was not followed.

Non-MCP Related Narratives

BOD, 5 day

The WG660094-2 LCS recovery (76%), is outside the acceptance criteria. Due to the expiration of the method required holding time, no further action was taken.

I, the undersigned, attest under the pains and penalties of perjury that, to the best of my knowledge and belief and based upon my personal inquiry of those responsible for providing the information contained in this analytical report, such information is accurate and complete. This certificate of analysis is not complete unless this page accompanies any and all pages of this report.

Authorized Signature: Lisa Westerlind

Title: Technical Director/Representative Date: 12/26/13

ORGANICS

VOLATILES

Project Name: NBHS IRA PSWS **Lab Number:** L1325663

Project Number: 115058 **Report Date:** 12/26/13

SAMPLE RESULTS

Lab ID:	L1325663-01 D	Date Collected:	12/18/13 07:30
Client ID:	EFFLUENT (GRAB)	Date Received:	12/18/13
Sample Location:	NEW BEDFORD, MA	Field Prep:	Not Specified
Matrix:	Water		
Analytical Method:	5,624		
Analytical Date:	12/21/13 23:34		
Analyst:	GT		

Parameter	Result	Qualifier	Units	RL	MDL	Dilution Factor
Volatile Organics by GC/MS - Westborough Lab						
Methylene chloride	ND		ug/l	12	--	2.5
1,1-Dichloroethane	ND		ug/l	3.8	--	2.5
Chloroform	ND		ug/l	3.8	--	2.5
Carbon tetrachloride	ND		ug/l	2.5	--	2.5
1,2-Dichloropropane	ND		ug/l	8.8	--	2.5
Dibromochloromethane	ND		ug/l	2.5	--	2.5
1,1,2-Trichloroethane	ND		ug/l	3.8	--	2.5
2-Chloroethylvinyl ether	ND		ug/l	50	--	2.5
Tetrachloroethene	ND		ug/l	3.8	--	2.5
Chlorobenzene	ND		ug/l	8.8	--	2.5
Trichlorofluoromethane	ND		ug/l	12	--	2.5
1,2-Dichloroethane	ND		ug/l	3.8	--	2.5
1,1,1-Trichloroethane	ND		ug/l	5.0	--	2.5
Bromodichloromethane	ND		ug/l	2.5	--	2.5
trans-1,3-Dichloropropene	ND		ug/l	3.8	--	2.5
cis-1,3-Dichloropropene	ND		ug/l	3.8	--	2.5
Bromoform	ND		ug/l	2.5	--	2.5
1,1,2,2-Tetrachloroethane	ND		ug/l	2.5	--	2.5
Benzene	ND		ug/l	2.5	--	2.5
Toluene	ND		ug/l	2.5	--	2.5
Ethylbenzene	ND		ug/l	2.5	--	2.5
Chloromethane	ND		ug/l	12	--	2.5
Bromomethane	ND		ug/l	12	--	2.5
Vinyl chloride	ND		ug/l	2.5	--	2.5
Chloroethane	ND		ug/l	5.0	--	2.5
1,1-Dichloroethene	ND		ug/l	2.5	--	2.5
trans-1,2-Dichloroethene	14		ug/l	3.8	--	2.5
cis-1,2-Dichloroethene[1]	180		ug/l	2.5	--	2.5
Trichloroethene	ND		ug/l	2.5	--	2.5
1,2-Dichlorobenzene	ND		ug/l	12	--	2.5
1,3-Dichlorobenzene	ND		ug/l	12	--	2.5

Project Name: NBHS IRA PSWS **Lab Number:** L1325663

Project Number: 115058 **Report Date:** 12/26/13

SAMPLE RESULTS

Lab ID: L1325663-01 D Date Collected: 12/18/13 07:30

Client ID: EFFLUENT (GRAB) Date Received: 12/18/13

Sample Location: NEW BEDFORD, MA Field Prep: Not Specified

Parameter	Result	Qualifier	Units	RL	MDL	Dilution Factor
Volatile Organics by GC/MS - Westborough Lab						
1,4-Dichlorobenzene	ND		ug/l	12	--	2.5
p/m-Xylene[1]	ND		ug/l	5.0	--	2.5
o-xylene[1]	ND		ug/l	2.5	--	2.5
Xylene (Total)[1]	ND		ug/l	5.0	--	2.5
Styrene[1]	ND		ug/l	2.5	--	2.5
Acetone[1]	ND		ug/l	25	--	2.5
Carbon disulfide[1]	ND		ug/l	12	--	2.5
2-Butanone[1]	ND		ug/l	25	--	2.5
Vinyl acetate[1]	ND		ug/l	25	--	2.5
4-Methyl-2-pentanone[1]	ND		ug/l	25	--	2.5
2-Hexanone[1]	ND		ug/l	25	--	2.5
Acrolein[1]	ND		ug/l	20	--	2.5
Acrylonitrile[1]	ND		ug/l	25	--	2.5
Dibromomethane[1]	ND		ug/l	2.5	--	2.5

Surrogate	% Recovery	Qualifier	Acceptance Criteria
Pentafluorobenzene	106		80-120
Fluorobenzene	106		80-120
4-Bromofluorobenzene	108		80-120

Project Name: NBHS IRA PSWS **Lab Number:** L1325663

Project Number: 115058 **Report Date:** 12/26/13

SAMPLE RESULTS

Lab ID:	L1325663-03 D	Date Collected:	12/18/13 07:30
Client ID:	EFFLUENT ROUND 1 THRU 4	Date Received:	12/18/13
Sample Location:	NEW BEDFORD, MA	Field Prep:	Not Specified
Matrix:	Water		
Analytical Method:	5,624		
Analytical Date:	12/22/13 00:09		
Analyst:	GT		

Parameter	Result	Qualifier	Units	RL	MDL	Dilution Factor
Volatile Organics by GC/MS - Westborough Lab						
Methylene chloride	ND		ug/l	10	--	2
1,1-Dichloroethane	ND		ug/l	3.0	--	2
Chloroform	ND		ug/l	3.0	--	2
Carbon tetrachloride	ND		ug/l	2.0	--	2
1,2-Dichloropropane	ND		ug/l	7.0	--	2
Dibromochloromethane	ND		ug/l	2.0	--	2
1,1,2-Trichloroethane	ND		ug/l	3.0	--	2
2-Chloroethylvinyl ether	ND		ug/l	40	--	2
Tetrachloroethene	ND		ug/l	3.0	--	2
Chlorobenzene	ND		ug/l	7.0	--	2
Trichlorofluoromethane	ND		ug/l	10	--	2
1,2-Dichloroethane	ND		ug/l	3.0	--	2
1,1,1-Trichloroethane	ND		ug/l	4.0	--	2
Bromodichloromethane	ND		ug/l	2.0	--	2
trans-1,3-Dichloropropene	ND		ug/l	3.0	--	2
cis-1,3-Dichloropropene	ND		ug/l	3.0	--	2
Bromoform	ND		ug/l	2.0	--	2
1,1,2,2-Tetrachloroethane	ND		ug/l	2.0	--	2
Benzene	ND		ug/l	2.0	--	2
Toluene	ND		ug/l	2.0	--	2
Ethylbenzene	ND		ug/l	2.0	--	2
Chloromethane	ND		ug/l	10	--	2
Bromomethane	ND		ug/l	10	--	2
Vinyl chloride	ND		ug/l	2.0	--	2
Chloroethane	ND		ug/l	4.0	--	2
1,1-Dichloroethene	ND		ug/l	2.0	--	2
trans-1,2-Dichloroethene	14		ug/l	3.0	--	2
cis-1,2-Dichloroethene[1]	180		ug/l	2.0	--	2
Trichloroethene	ND		ug/l	2.0	--	2
1,2-Dichlorobenzene	ND		ug/l	10	--	2
1,3-Dichlorobenzene	ND		ug/l	10	--	2

Project Name: NBHS IRA PSWS **Lab Number:** L1325663

Project Number: 115058 **Report Date:** 12/26/13

SAMPLE RESULTS

Lab ID: L1325663-03 D Date Collected: 12/18/13 07:30

Client ID: EFFLUENT ROUND 1 THRU 4 Date Received: 12/18/13

Sample Location: NEW BEDFORD, MA Field Prep: Not Specified

Parameter	Result	Qualifier	Units	RL	MDL	Dilution Factor
Volatile Organics by GC/MS - Westborough Lab						
1,4-Dichlorobenzene	ND		ug/l	10	--	2
p/m-Xylene[1]	ND		ug/l	4.0	--	2
o-xylene[1]	ND		ug/l	2.0	--	2
Xylene (Total)[1]	ND		ug/l	4.0	--	2
Styrene[1]	ND		ug/l	2.0	--	2
Acetone[1]	ND		ug/l	20	--	2
Carbon disulfide[1]	ND		ug/l	10	--	2
2-Butanone[1]	ND		ug/l	20	--	2
Vinyl acetate[1]	ND		ug/l	20	--	2
4-Methyl-2-pentanone[1]	ND		ug/l	20	--	2
2-Hexanone[1]	ND		ug/l	20	--	2
Acrolein[1]	ND		ug/l	16	--	2
Acrylonitrile[1]	ND		ug/l	20	--	2
Dibromomethane[1]	ND		ug/l	2.0	--	2

Surrogate	% Recovery	Qualifier	Acceptance Criteria
Pentafluorobenzene	107		80-120
Fluorobenzene	105		80-120
4-Bromofluorobenzene	109		80-120

Project Name: NBHS IRA PSWS **Lab Number:** L1325663

Project Number: 115058 **Report Date:** 12/26/13

Method Blank Analysis
Batch Quality Control

Analytical Method: 5,624
Analytical Date: 12/21/13 21:50
Analyst: GT

Parameter	Result	Qualifier	Units	RL	MDL
Volatile Organics by GC/MS - Westborough Lab for sample(s): 01,03 Batch: WG661079-4					
Methylene chloride	ND		ug/l	5.0	--
1,1-Dichloroethane	ND		ug/l	1.5	--
Chloroform	ND		ug/l	1.5	--
Carbon tetrachloride	ND		ug/l	1.0	--
1,2-Dichloropropane	ND		ug/l	3.5	--
Dibromochloromethane	ND		ug/l	1.0	--
1,1,2-Trichloroethane	ND		ug/l	1.5	--
2-Chloroethylvinyl ether	ND		ug/l	20	--
Tetrachloroethene	ND		ug/l	1.5	--
Chlorobenzene	ND		ug/l	3.5	--
Trichlorofluoromethane	ND		ug/l	5.0	--
1,2-Dichloroethane	ND		ug/l	1.5	--
1,1,1-Trichloroethane	ND		ug/l	2.0	--
Bromodichloromethane	ND		ug/l	1.0	--
trans-1,3-Dichloropropene	ND		ug/l	1.5	--
cis-1,3-Dichloropropene	ND		ug/l	1.5	--
Bromoform	ND		ug/l	1.0	--
1,1,2,2-Tetrachloroethane	ND		ug/l	1.0	--
Benzene	ND		ug/l	1.0	--
Toluene	ND		ug/l	1.0	--
Ethylbenzene	ND		ug/l	1.0	--
Chloromethane	ND		ug/l	5.0	--
Bromomethane	ND		ug/l	5.0	--
Vinyl chloride	ND		ug/l	1.0	--
Chloroethane	ND		ug/l	2.0	--
1,1-Dichloroethene	ND		ug/l	1.0	--
trans-1,2-Dichloroethene	ND		ug/l	1.5	--
cis-1,2-Dichloroethene[1]	ND		ug/l	1.0	--
Trichloroethene	ND		ug/l	1.0	--
1,2-Dichlorobenzene	ND		ug/l	5.0	--
1,3-Dichlorobenzene	ND		ug/l	5.0	--

Project Name: NBHS IRA PSWS **Lab Number:** L1325663

Project Number: 115058 **Report Date:** 12/26/13

Method Blank Analysis
Batch Quality Control

Analytical Method: 5,624
Analytical Date: 12/21/13 21:50
Analyst: GT

Parameter	Result	Qualifier	Units	RL	MDL
Volatile Organics by GC/MS - Westborough Lab for sample(s): 01,03 Batch: WG661079-4					
1,4-Dichlorobenzene	ND		ug/l	5.0	--
p/m-Xylene[1]	ND		ug/l	2.0	--
o-xylene[1]	ND		ug/l	1.0	--
Xylene (Total)[1]	ND		ug/l	2.0	--
Styrene[1]	ND		ug/l	1.0	--
Acetone[1]	ND		ug/l	10	--
Carbon disulfide[1]	ND		ug/l	5.0	--
2-Butanone[1]	ND		ug/l	10	--
Vinyl acetate[1]	ND		ug/l	10	--
4-Methyl-2-pentanone[1]	ND		ug/l	10	--
2-Hexanone[1]	ND		ug/l	10	--
Acrolein[1]	ND		ug/l	8.0	--
Acrylonitrile[1]	ND		ug/l	10	--
Methyl tert butyl ether[1]	ND		ug/l	10	--
Dibromomethane[1]	ND		ug/l	1.0	--
1,4-Dioxane[1]	ND		ug/l	2000	--
Tert-Butyl Alcohol[1]	ND		ug/l	100	--
Tertiary-Amyl Methyl Ether[1]	ND		ug/l	20	--

Surrogate	%Recovery	Qualifier	Acceptance Criteria
Pentafluorobenzene	107		80-120
Fluorobenzene	111		80-120
4-Bromofluorobenzene	106		80-120

Lab Control Sample Analysis
Batch Quality Control

Project Name: NBHS IRA PSWS
Project Number: 115058

Lab Number: L1325663
Report Date: 12/26/13

Parameter	LCS %Recovery	Qual	LCSD %Recovery	Qual	%Recovery Limits	RPD	Qual	RPD Limits
Volatile Organics by GC/MS - Westborough Lab Associated sample(s): 01,03 Batch: WG661079-3								
Methylene chloride	99		-		70-111	-		30
1,1-Dichloroethane	93		-		78-116	-		30
Chloroform	95		-		86-111	-		30
Carbon tetrachloride	84		-		60-112	-		30
1,2-Dichloropropane	90		-		83-113	-		30
Dibromochloromethane	92		-		58-129	-		30
1,1,2-Trichloroethane	98		-		80-118	-		30
2-Chloroethylvinyl ether	77		-		69-124	-		30
Tetrachloroethene	91		-		80-126	-		30
Chlorobenzene	93		-		80-126	-		30
Trichlorofluoromethane	88		-		83-128	-		30
1,2-Dichloroethane	90		-		82-110	-		30
1,1,1-Trichloroethane	94		-		72-109	-		30
Bromodichloromethane	92		-		71-120	-		30
trans-1,3-Dichloropropene	98		-		73-106	-		30
cis-1,3-Dichloropropene	92		-		78-111	-		30
Bromoform	88		-		45-131	-		30
1,1,2,2-Tetrachloroethane	95		-		81-122	-		30
Benzene	88		-		84-116	-		30
Toluene	100		-		83-121	-		30
Ethylbenzene	99		-		84-123	-		30

Lab Control Sample Analysis
Batch Quality Control

Project Name: NBHS IRA PSWS
Project Number: 115058

Lab Number: L1325663
Report Date: 12/26/13

Parameter	LCS %Recovery	Qual	LCSD %Recovery	Qual	%Recovery Limits	RPD	Qual	RPD Limits
Volatile Organics by GC/MS - Westborough Lab Associated sample(s): 01,03 Batch: WG661079-3								
Chloromethane	87		-		70-144	-		30
Bromomethane	85		-		63-141	-		30
Vinyl chloride	89		-		56-118	-		30
Chloroethane	93		-		74-130	-		30
1,1-Dichloroethene	91		-		77-116	-		30
trans-1,2-Dichloroethene	94		-		81-121	-		30
cis-1,2-Dichloroethene[1]	97		-		85-110	-		30
Trichloroethene	84		-		84-118	-		30
1,2-Dichlorobenzene	98		-		78-128	-		30
1,3-Dichlorobenzene	95		-		77-125	-		30
1,4-Dichlorobenzene	98		-		77-125	-		30
p/m-Xylene[1]	105		-		81-121	-		30
o-Xylene[1]	102		-		81-124	-		30
Xylene (Total)[1]	104		-		81-122	-		30
Styrene[1]	105		-		84-133	-		30
Acetone[1]	109		-		40-160	-		30
Carbon disulfide[1]	97		-		54-134	-		30
2-Butanone[1]	104		-		57-116	-		30
Vinyl acetate[1]	97		-		40-160	-		30
4-Methyl-2-pentanone[1]	110		-		79-125	-		30
2-Hexanone[1]	104		-		78-120	-		30

Lab Control Sample Analysis
Batch Quality Control

Project Name: NBHS IRA PSWS
Project Number: 115058

Lab Number: L1325663
Report Date: 12/26/13

Parameter	LCS %Recovery	Qual	LCSD %Recovery	Qual	%Recovery Limits	RPD	Qual	RPD Limits
Volatile Organics by GC/MS - Westborough Lab Associated sample(s): 01,03 Batch: WG661079-3								
Acrolein[1]	108		-		40-160	-		30
Acrylonitrile[1]	116		-		66-123	-		30
Methyl tert butyl ether[1]	115		-		57-126	-		30
Dibromomethane[1]	97		-		65-126	-		30
1,4-Dioxane[1]	79		-		74-121	-		30
tert-Butyl Alcohol[1]	101		-		52-114	-		30
Tertiary-Amyl Methyl Ether[1]	101		-		66-111	-		30

Surrogate	LCS %Recovery	Qual	LCSD %Recovery	Qual	Acceptance Criteria
Pentafluorobenzene	103				80-120
Fluorobenzene	92				80-120
4-Bromofluorobenzene	98				80-120

Matrix Spike Analysis
Batch Quality Control

Project Name: NBHS IRA PSWS
Project Number: 115058

Lab Number: L1325663
Report Date: 12/26/13

Parameter	Native Sample	MS Added	MS Found	MS %Recovery	Qual	MSD Found	MSD %Recovery	Qual	Recovery Limits	RPD	Qual	RPD Limits
Volatile Organics by GC/MS - Westborough Lab Associated sample(s): 01,03 QC Batch ID: WG661079-6 QC Sample: L1325821-01 Client ID: MS Sample												
Methylene chloride	ND	200	210	106		-	-		70-111	-		30
1,1-Dichloroethane	ND	200	220	112		-	-		78-116	-		30
Chloroform	ND	200	220	109		-	-		86-111	-		30
Carbon tetrachloride	ND	200	240	**118**	Q	-	-		60-112	-		30
1,2-Dichloropropane	ND	200	170	85		-	-		83-113	-		30
Dibromochloromethane	ND	200	180	93		-	-		58-129	-		30
1,1,2-Trichloroethane	ND	200	200	98		-	-		80-118	-		30
2-Chloroethylvinyl ether	ND	200	210	103		-	-		69-124	-		30
Tetrachloroethene	ND	200	190	97		-	-		80-126	-		30
Chlorobenzene	ND	200	180	91		-	-		80-126	-		30
Trichlorofluoromethane	ND	200	230	117		-	-		83-128	-		30
1,2-Dichloroethane	ND	200	200	99		-	-		82-110	-		30
1,1,1-Trichloroethane	ND	200	210	107		-	-		72-109	-		30
Bromodichloromethane	ND	200	190	95		-	-		71-120	-		30
trans-1,3-Dichloropropene	ND	200	160	83		-	-		73-106	-		30
cis-1,3-Dichloropropene	ND	200	130	**66**	Q	-	-		78-111	-		30
Bromoform	ND	200	180	88		-	-		45-131	-		30
1,1,2,2-Tetrachloroethane	ND	200	180	91		-	-		81-122	-		30
Benzene	ND	200	210	104		-	-		84-116	-		30
Toluene	ND	200	200	100		-	-		83-121	-		30
Ethylbenzene	ND	200	210	103		-	-		84-123	-		30

Matrix Spike Analysis
Batch Quality Control

Project Name: NBHS IRA PSWS
Project Number: 115058

Lab Number: L1325663
Report Date: 12/26/13

Parameter	Native Sample	MS Added	MS Found	MS %Recovery	Qual	MSD Found	MSD %Recovery	Qual	Recovery Limits	RPD	Qual	RPD Limits
Volatile Organics by GC/MS - Westborough Lab Associated sample(s): 01,03 QC Batch ID: WG661079-6 QC Sample: L1325821-01 Client ID: MS Sample												
Chloromethane	ND	200	160	82		-	-		70-144	-		30
Bromomethane	ND	200	96	**48**	Q	-	-		63-141	-		30
Vinyl chloride	ND	200	200	102		-	-		56-118	-		30
Chloroethane	ND	200	200	102		-	-		74-130	-		30
1,1-Dichloroethene	ND	200	230	116		-	-		77-116	-		30
trans-1,2-Dichloroethene	ND	200	210	107		-	-		81-121	-		30
cis-1,2-Dichloroethene[1]	ND	200	220	**113**	Q	-	-		85-110	-		30
Trichloroethene	ND	200	160	**81**	Q	-	-		84-118	-		30
1,2-Dichlorobenzene	ND	200	200	101		-	-		78-128	-		30
1,3-Dichlorobenzene	ND	200	190	97		-	-		77-125	-		30
1,4-Dichlorobenzene	ND	200	190	96		-	-		77-125	-		30
p/m-Xylene[1]	ND	400	450	112		-	-		81-121	-		30
o-Xylene[1]	ND	200	210	107		-	-		81-124	-		30
Xylene (Total)[1]	ND	600	660	111		-	-		81-122	-		30
Styrene[1]	ND	200	210	107		-	-		84-133	-		30
Acetone[1]	190	500	890	140		-	-		40-160	-		30
Carbon disulfide[1]	ND	200	230	113		-	-		54-134	-		30
2-Butanone[1]	ND	500	600	**120**	Q	-	-		57-116	-		30
Vinyl acetate[1]	ND	400	450	113		-	-		40-160	-		30
4-Methyl-2-pentanone[1]	ND	500	530	106		-	-		79-125	-		30
2-Hexanone[1]	ND	500	520	104		-	-		78-120	-		30

Matrix Spike Analysis
Batch Quality Control

Project Name: NBHS IRA PSWS
Project Number: 115058

Lab Number: L1325663
Report Date: 12/26/13

Parameter	Native Sample	MS Added	MS Found	MS %Recovery	Qual	MSD Found	MSD %Recovery	Qual	Recovery Limits	RPD	Qual	RPD Limits
Volatile Organics by GC/MS - Westborough Lab Associated sample(s): 01,03 QC Batch ID: WG661079-6 QC Sample: L1325821-01 Client ID: MS Sample												
Acrolein[1]	ND	400	460	116		-	-		40-160	-		30
Acrylonitrile[1]	ND	400	460	116		-	-		66-123	-		30
Dibromomethane[1]	ND	200	180	88		-	-		65-126	-		30

Surrogate	MS % Recovery	MS Qualifier	MSD % Recovery	MSD Qualifier	Acceptance Criteria
4-Bromofluorobenzene	97				80-120
Fluorobenzene	103				80-120
Pentafluorobenzene	104				80-120

Lab Duplicate Analysis
Batch Quality Control

Project Name: NBHS IRA PSWS
Project Number: 115058

Lab Number: L1325663
Report Date: 12/26/13

Parameter	Native Sample	Duplicate Sample	Units	RPD	Qual	RPD Limits
Volatile Organics by GC/MS - Westborough Lab Associated sample(s): 01,03 QC Batch ID: WG661079-5 QC Sample: L1325821-01 Client ID: DUP Sample						
Methylene chloride	ND	ND	ug/l	NC		30
1,1-Dichloroethane	ND	ND	ug/l	NC		30
Chloroform	ND	ND	ug/l	NC		30
Carbon tetrachloride	ND	ND	ug/l	NC		30
1,2-Dichloropropane	ND	ND	ug/l	NC		30
Dibromochloromethane	ND	ND	ug/l	NC		30
1,1,2-Trichloroethane	ND	ND	ug/l	NC		30
2-Chloroethylvinyl ether	ND	ND	ug/l	NC		30
Tetrachloroethene	ND	ND	ug/l	NC		30
Chlorobenzene	ND	ND	ug/l	NC		30
Trichlorofluoromethane	ND	ND	ug/l	NC		30
1,2-Dichloroethane	ND	ND	ug/l	NC		30
1,1,1-Trichloroethane	ND	ND	ug/l	NC		30
Bromodichloromethane	ND	ND	ug/l	NC		30
trans-1,3-Dichloropropene	ND	ND	ug/l	NC		30
cis-1,3-Dichloropropene	ND	ND	ug/l	NC		30
Bromoform	ND	ND	ug/l	NC		30
1,1,2,2-Tetrachloroethane	ND	ND	ug/l	NC		30
Benzene	ND	ND	ug/l	NC		30

Lab Duplicate Analysis
Batch Quality Control

Project Name: NBHS IRA PSWS
Project Number: 115058

Lab Number: L1325663
Report Date: 12/26/13

Parameter	Native Sample	Duplicate Sample	Units	RPD	RPD Limits
Volatile Organics by GC/MS - Westborough Lab Associated sample(s): 01,03 QC Batch ID: WG661079-5 QC Sample: L1325821-01 Client ID: DUP Sample					
Toluene	ND	ND	ug/l	NC	30
Ethylbenzene	ND	ND	ug/l	NC	30
Chloromethane	ND	ND	ug/l	NC	30
Bromomethane	ND	ND	ug/l	NC	30
Vinyl chloride	ND	ND	ug/l	NC	30
Chloroethane	ND	ND	ug/l	NC	30
1,1-Dichloroethene	ND	ND	ug/l	NC	30
trans-1,2-Dichloroethene	ND	ND	ug/l	NC	30
cis-1,2-Dichloroethene[1]	ND	ND	ug/l	NC	30
Trichloroethene	ND	ND	ug/l	NC	30
1,2-Dichlorobenzene	ND	ND	ug/l	NC	30
1,3-Dichlorobenzene	ND	ND	ug/l	NC	30
1,4-Dichlorobenzene	ND	ND	ug/l	NC	30
p/m-Xylene[1]	ND	ND	ug/l	NC	30
o-Xylene[1]	ND	ND	ug/l	NC	30
Xylene (Total)[1]	ND	ND	ug/l	NC	30
Styrene[1]	ND	ND	ug/l	NC	30
Acetone[1]	190	160	ug/l	17	30
Carbon disulfide[1]	ND	ND	ug/l	NC	30

Lab Duplicate Analysis
Batch Quality Control

Project Name: NBHS IRA PSWS
Project Number: 115058

Lab Number: L1325663
Report Date: 12/26/13

Parameter	Native Sample	Duplicate Sample	Units	RPD	RPD Limits
Volatile Organics by GC/MS - Westborough Lab Associated sample(s): 01,03 QC Batch ID: WG661079-5 QC Sample: L1325821-01 Client ID: DUP Sample					
2-Butanone[1]	ND	ND	ug/l	NC	30
Vinyl acetate[1]	ND	ND	ug/l	NC	30
4-Methyl-2-pentanone[1]	ND	ND	ug/l	NC	30
2-Hexanone[1]	ND	ND	ug/l	NC	30
Acrolein[1]	ND	ND	ug/l	NC	30
Acrylonitrile[1]	ND	ND	ug/l	NC	30
Dibromomethane[1]	ND	ND	ug/l	NC	30

Surrogate	%Recovery	Qualifier	%Recovery	Qualifier	Acceptance Criteria
Pentafluorobenzene	110		111		80-120
Fluorobenzene	106		102		80-120
4-Bromofluorobenzene	99		97		80-120

PCBS

Project Name: NBHS IRA PSWS **Lab Number:** L1325663

Project Number: 115058 **Report Date:** 12/26/13

SAMPLE RESULTS

Lab ID:	L1325663-02	Date Collected:	12/18/13 11:30
Client ID:	EFFLUENT (COMP)	Date Received:	12/18/13
Sample Location:	NEW BEDFORD, MA	Field Prep:	Not Specified
Matrix:	Water	Extraction Method:	EPA 608
Analytical Method:	5,608	Extraction Date:	12/18/13 20:03
Analytical Date:	12/19/13 17:51	Cleanup Method1:	EPA 3665A
Analyst:	JT	Cleanup Date1:	12/19/13
		Cleanup Method2:	EPA 3660B
		Cleanup Date2:	12/19/13

Parameter	Result	Qualifier	Units	RL	MDL	Dilution Factor	Column
Polychlorinated Biphenyls by GC - Westborough Lab							
Aroclor 1016	ND		ug/l	0.250	--	1	A
Aroclor 1221	ND		ug/l	0.250	--	1	A
Aroclor 1232	ND		ug/l	0.250	--	1	A
Aroclor 1242	ND		ug/l	0.250	--	1	A
Aroclor 1248	ND		ug/l	0.250	--	1	A
Aroclor 1254	ND		ug/l	0.250	--	1	A
Aroclor 1260	ND		ug/l	0.200	--	1	A

Surrogate	% Recovery	Qualifier	Acceptance Criteria	Column
2,4,5,6-Tetrachloro-m-xylene	64		30-150	A
Decachlorobiphenyl	77		30-150	A

Project Name: NBHS IRA PSWS

Project Number: 115058

Lab Number: L1325663

Report Date: 12/26/13

Method Blank Analysis
Batch Quality Control

Analytical Method: 5,608
Analytical Date: 12/19/13 18:28
Analyst: JT

Extraction Method: EPA 608
Extraction Date: 12/18/13 20:03
Cleanup Method1: EPA 3665A
Cleanup Date1: 12/19/13
Cleanup Method2: EPA 3660B
Cleanup Date2: 12/19/13

Parameter	Result	Qualifier	Units	RL	MDL	Column
Polychlorinated Biphenyls by GC - Westborough Lab for sample(s): 02 Batch: WG660103-1						
Aroclor 1016	ND		ug/l	0.250	--	A
Aroclor 1221	ND		ug/l	0.250	--	A
Aroclor 1232	ND		ug/l	0.250	--	A
Aroclor 1242	ND		ug/l	0.250	--	A
Aroclor 1248	ND		ug/l	0.250	--	A
Aroclor 1254	ND		ug/l	0.250	--	A
Aroclor 1260	ND		ug/l	0.200	--	A

Surrogate	%Recovery	Qualifier	Acceptance Criteria	Column
2,4,5,6-Tetrachloro-m-xylene	65		30-150	A
Decachlorobiphenyl	85		30-150	A

Matrix Spike Analysis
Batch Quality Control

Project Name: NBHS IRA PSWS
Project Number: 115058
Lab Number: L1325663
Report Date: 12/26/13

Parameter	Native Sample	MS Added	MS Found	MS %Recovery	Qual	MSD Found	MSD %Recovery	Qual	Recovery Limits	RPD	Qual	RPD Limits	Column
Polychlorinated Biphenyls by GC - Westborough Lab Associated sample(s): 02 (COMP) QC Batch ID: WG660103-3 QC Sample: L1325663-02 Client ID: EFFLUENT													
Aroclor 1016	ND	2	1.60	80		-	-		40-140	-		50	A
Aroclor 1260	ND	2	1.37	68		-	-		40-140	-		50	A

Surrogate	MS % Recovery	MS Qualifier	MSD % Recovery	MSD Qualifier	Acceptance Criteria	Column
2,4,5,6-Tetrachloro-m-xylene	70				30-150	A
Decachlorobiphenyl	77				30-150	A

Lab Control Sample Analysis

Batch Quality Control

Project Name: NBHS IRA PSWS

Project Number: 115058

Lab Number: L1325663

Report Date: 12/26/13

Parameter	LCS %Recovery	Qual	LCSD %Recovery	Qual	%Recovery Limits	RPD	Qual	RPD Limits	Column
Polychlorinated Biphenyls by GC - Westborough Lab Associated sample(s): 02 Batch: WG660103-2									
Aroclor 1016	82		-		40-140	-		50	A
Aroclor 1260	78		-		40-140	-		50	A

Surrogate	LCS %Recovery	Qual	LCSD %Recovery	Qual	Acceptance Criteria	Column
2,4,5,6-Tetrachloro-m-xylene	76				30-150	A
Decachlorobiphenyl	88				30-150	A

Lab Duplicate Analysis
Batch Quality Control

Project Name: NBHS IRA PSWS
Project Number: 115058

Lab Number: L1325663
Report Date: 12/26/13

Parameter	Native Sample	Duplicate Sample	Units	RPD	Qual	RPD Limits	
Polychlorinated Biphenyls by GC - Westborough Lab Associated sample(s): 02 QC Batch ID: WG660103-4 QC Sample: L1325663-02 Client ID: EFFLUENT (COMP)							
Aroclor 1016	ND	ND	ug/l	NC		50	A
Aroclor 1221	ND	ND	ug/l	NC		50	A
Aroclor 1232	ND	ND	ug/l	NC		50	A
Aroclor 1242	ND	ND	ug/l	NC		50	A
Aroclor 1248	ND	ND	ug/l	NC		50	A
Aroclor 1254	ND	ND	ug/l	NC		50	A
Aroclor 1260	ND	ND	ug/l	NC		50	A

Surrogate	%Recovery	Qualifier	%Recovery	Qualifier	Acceptance Criteria	Column
2,4,5,6-Tetrachloro-m-xylene	64		73		30-150	A
Decachlorobiphenyl	77		81		30-150	A

INORGANICS
&
MISCELLANEOUS

Project Name: NBHS IRA PSWS
Project Number: 115058

Lab Number: L1325663
Report Date: 12/26/13

SAMPLE RESULTS

Lab ID: L1325663-01
Client ID: EFFLUENT (GRAB)
Sample Location: NEW BEDFORD, MA
Matrix: Water

Date Collected: 12/18/13 07:30
Date Received: 12/18/13
Field Prep: Not Specified

Parameter	Result	Qualifier	Units	RL	MDL	Dilution Factor	Date Prepared	Date Analyzed	Analytical Method	Analyst
General Chemistry - Westborough Lab										
pH (H)	7.9		SU	-	NA	1	-	12/18/13 20:50	30,4500H+-B	EL
Oil & Grease, Hem-Grav	ND		mg/l	4.0	--	1	12/20/13 15:00	12/23/13 08:00	74,1664A	ML

Project Name: NBHS IRA PSWS
Project Number: 115058

Lab Number: L1325663
Report Date: 12/26/13

SAMPLE RESULTS

Lab ID: L1325663-02
Client ID: EFFLUENT (COMP)
Sample Location: NEW BEDFORD, MA
Matrix: Water

Date Collected: 12/18/13 11:30
Date Received: 12/18/13
Field Prep: Not Specified

Parameter	Result	Qualifier	Units	RL	MDL	Dilution Factor	Date Prepared	Date Analyzed	Analytical Method	Analyst
General Chemistry - Westborough Lab										
Solids, Total Suspended	ND		mg/l	5.0	NA	1	-	12/20/13 17:30	30,2540D	DW
BOD, 5 day	ND		mg/l	2.0	NA	1	12/18/13 19:55	12/23/13 15:25	30,5210B	SE

Project Name: NBHS IRA PSWS **Lab Number:** L1325663

Project Number: 115058 **Report Date:** 12/26/13

Method Blank Analysis
Batch Quality Control

Parameter	Result	Qualifier	Units	RL	MDL	Dilution Factor	Date Prepared	Date Analyzed	Analytical Method	Analyst
General Chemistry - Westborough Lab for sample(s): 02 Batch: WG660094-1										
BOD, 5 day	ND		mg/l	2.0	NA	1	12/18/13 19:55	12/23/13 15:25	30,5210B	SE
General Chemistry - Westborough Lab for sample(s): 02 Batch: WG660503-1										
Solids, Total Suspended	ND		mg/l	5.0	NA	1	-	12/20/13 17:30	30,2540D	DW
General Chemistry - Westborough Lab for sample(s): 01 Batch: WG660719-1										
Oil & Grease, Hem-Grav	ND		mg/l	4.0	--	1	12/20/13 15:00	12/23/13 08:00	74,1664A	ML

Lab Control Sample Analysis
Batch Quality Control

Project Name: NBHS IRA PSWS
Project Number: 115058

Lab Number: L1325663
Report Date: 12/26/13

Parameter	LCS %Recovery	Qual	LCSD %Recovery	Qual	%Recovery Limits	RPD	Qual	RPD Limits
General Chemistry - Westborough Lab Associated sample(s): 02 Batch: WG660094-2								
BOD, 5 day	**76**	Q	-		85-115	-		20
General Chemistry - Westborough Lab Associated sample(s): 01 Batch: WG660113-1								
pH	100		-		99-101	-		5
General Chemistry - Westborough Lab Associated sample(s): 01 Batch: WG660719-2								
Oil & Grease, Hem-Grav	90		-		78-114	-		18

Matrix Spike Analysis
Batch Quality Control

Project Name: NBHS IRA PSWS
Project Number: 115058

Lab Number: L1325663
Report Date: 12/26/13

Parameter	Native Sample	MS Added	MS Found	MS %Recovery	Qual	MSD Found	MSD %Recovery	Qual	Recovery Limits	RPD	Qual	RPD Limits
General Chemistry - Westborough Lab Associated sample(s): 02 QC Batch ID: WG660094-4 QC Sample: L1325663-02 Client ID: EFFLUENT (COMP)												
BOD, 5 day	ND	100	78	78		-	-		50-145	-		35
General Chemistry - Westborough Lab Associated sample(s): 01 QC Batch ID: WG660719-4 QC Sample: L1325812-02 Client ID: MS Sample												
Oil & Grease, Hem-Grav	ND	41.2	34	83		-	-		78-114	-		18

Lab Duplicate Analysis
Batch Quality Control

Project Name: NBHS IRA PSWS
Project Number: 115058

Lab Number: L1325663
Report Date: 12/26/13

Parameter	Native Sample	Duplicate Sample	Units	RPD	Qual	RPD Limits
General Chemistry - Westborough Lab Associated sample(s): 02 QC Batch ID: WG660094-3 QC Sample: L1325650-01 Client ID: DUP Sample						
BOD, 5 day	140	150	mg/l	7		35
General Chemistry - Westborough Lab Associated sample(s): 01 QC Batch ID: WG660113-2 QC Sample: L1325663-01 Client ID: EFFLUENT (GRAB)						
pH (H)	7.9	7.8	SU	1		5
General Chemistry - Westborough Lab Associated sample(s): 02 QC Batch ID: WG660503-2 QC Sample: L1325681-01 Client ID: DUP Sample						
Solids, Total Suspended	22	18	mg/l	20		29
General Chemistry - Westborough Lab Associated sample(s): 01 QC Batch ID: WG660719-3 QC Sample: L1325663-01 Client ID: EFFLUENT (GRAB)						
Oil & Grease, Hem-Grav	ND	ND	mg/l	NC		18

Project Name: NBHS IRA PSWS
Project Number: 115058

Lab Number: L1325663
Report Date: 12/26/13

Sample Receipt and Container Information

Were project specific reporting limits specified? YES

Reagent H2O Preserved Vials Frozen on: NA

Cooler Information Custody Seal

Cooler	
A	Absent
B	Absent

Container Information

Container ID	Container Type	Cooler	pH	Temp deg C	Pres	Seal	Analysis(*)
L1325663-01A	Vial Na2S2O3 preserved	B	N/A	4.7	Y	Absent	624(3)
L1325663-01B	Vial Na2S2O3 preserved	B	N/A	4.7	Y	Absent	624(3)
L1325663-01C	Vial Na2S2O3 preserved	B	N/A	4.7	Y	Absent	624(3)
L1325663-01D	Amber 1000ml HCl preserved	A	N/A	3.9	Y	Absent	OG-1664(28)
L1325663-01E	Amber 1000ml HCl preserved	A	N/A	3.9	Y	Absent	OG-1664(28)
L1325663-01F	Plastic 250ml unpreserved	A	7	3.9	Y	Absent	PH-4500(.01)
L1325663-02A	Amber 1000ml unpreserved	A	7	3.9	Y	Absent	PCB-608(7)
L1325663-02B	Amber 1000ml unpreserved	A	7	3.9	Y	Absent	PCB-608(7)
L1325663-02C	Plastic 500ml unpreserved	A	7	3.9	Y	Absent	BOD-5210(2)
L1325663-02D	Plastic 1000ml unpreserved	A	7	3.9	Y	Absent	TSS-2540(7)
L1325663-03A	Vial Na2S2O3 preserved	B	N/A	4.7	Y	Absent	COMP-VOA()
L1325663-03B	Vial Na2S2O3 preserved	B	N/A	4.7	Y	Absent	COMP-VOA()
L1325663-03C	Vial Na2S2O3 preserved	B	N/A	4.7	Y	Absent	COMP-VOA()
L1325663-03D	Vial Na2S2O3 preserved	B	N/A	4.7	Y	Absent	COMP-VOA()
L1325663-03E	Vial Na2S2O3 preserved	B	N/A	4.7	Y	Absent	COMP-VOA()
L1325663-03F	Vial Na2S2O3 preserved	B	N/A	4.7	Y	Absent	COMP-VOA()
L1325663-03G	Vial Na2S2O3 preserved	B	N/A	4.7	Y	Absent	COMP-VOA()
L1325663-03H	Vial Na2S2O3 preserved	B	N/A	4.7	Y	Absent	COMP-VOA()
L1325663-03I	Vial Na2S2O3 preserved	B	N/A	4.7	Y	Absent	COMP-VOA()
L1325663-03J	Vial Na2S2O3 preserved	B	N/A	4.7	Y	Absent	COMP-VOA()
L1325663-03K	Vial Na2S2O3 preserved	B	N/A	4.7	Y	Absent	COMP-VOA()
L1325663-03X	Vial Na2S2O3 preserved split	B	N/A	4.7	Y	Absent	624(3)
L1325663-03Y	Vial Na2S2O3 preserved split	B	N/A	4.7	Y	Absent	624(3)

*Values in parentheses indicate holding time in days

Project Name:	NBHS IRA PSWS	**Lab Number:**	L1325663
Project Number:	115058	**Report Date:**	12/26/13

GLOSSARY

Acronyms

EDL	- Estimated Detection Limit: This value represents the level to which target analyte concentrations are reported as estimated values, when those target analyte concentrations are quantified below the reporting limit (RL). The EDL includes any adjustments from dilutions, concentrations or moisture content, where applicable. The use of EDLs is specific to the analysis of PAHs using Solid-Phase Microextraction (SPME).
EPA	- Environmental Protection Agency.
LCS	- Laboratory Control Sample: A sample matrix, free from the analytes of interest, spiked with verified known amounts of analytes or a material containing known and verified amounts of analytes.
LCSD	- Laboratory Control Sample Duplicate: Refer to LCS.
LFB	- Laboratory Fortified Blank: A sample matrix, free from the analytes of interest, spiked with verified known amounts of analytes or a material containing known and verified amounts of analytes.
MDL	- Method Detection Limit: This value represents the level to which target analyte concentrations are reported as estimated values, when those target analyte concentrations are quantified below the reporting limit (RL). The MDL includes any adjustments from dilutions, concentrations or moisture content, where applicable.
MS	- Matrix Spike Sample: A sample prepared by adding a known mass of target analyte to a specified amount of matrix sample for which an independent estimate of target analyte concentration is available.
MSD	- Matrix Spike Sample Duplicate: Refer to MS.
NA	- Not Applicable.
NC	- Not Calculated: Term is utilized when one or more of the results utilized in the calculation are non-detect at the parameter's reporting unit.
NI	- Not Ignitable.
RL	- Reporting Limit: The value at which an instrument can accurately measure an analyte at a specific concentration. The RL includes any adjustments from dilutions, concentrations or moisture content, where applicable.
RPD	- Relative Percent Difference: The results from matrix and/or matrix spike duplicates are primarily designed to assess the precision of analytical results in a given matrix and are expressed as relative percent difference (RPD). Values which are less than five times the reporting limit for any individual parameter are evaluated by utilizing the absolute difference between the values; although the RPD value will be provided in the report.
SRM	- Standard Reference Material: A reference sample of a known or certified value that is of the same or similar matrix as the associated field samples.

Footnotes

1	- The reference for this analyte should be considered modified since this analyte is absent from the target analyte list of the original method.

Terms

Analytical Method: Both the document from which the method originates and the analytical reference method. (Example: EPA 8260B is shown as 1,8260B.) The codes for the reference method documents are provided in the References section of the Addendum.

Data Qualifiers

A	- Spectra identified as "Aldol Condensation Product".
B	- The analyte was detected above the reporting limit in the associated method blank. Flag only applies to associated field samples that have detectable concentrations of the analyte at less than ten times (10x) the concentration found in the blank. For MCP-related projects, flag only applies to associated field samples that have detectable concentrations of the analyte at less than ten times (10x) the concentration found in the blank. For DOD-related projects, flag only applies to associated field samples that have detectable concentrations of the analyte at less than ten times (10x) the concentration found in the blank AND the analyte was detected above one-half the reporting limit (or above the reporting limit for common lab contaminants) in the associated method blank. For NJ-Air-related projects, flag only applies to associated field samples that have detectable concentrations of the analyte above the reporting limit.
C	- Co-elution: The target analyte co-elutes with a known lab standard (i.e. surrogate, internal standards, etc.) for co-extracted analyses.
D	- Concentration of analyte was quantified from diluted analysis. Flag only applies to field samples that have detectable concentrations of the analyte.
E	- Concentration of analyte exceeds the range of the calibration curve and/or linear range of the instrument.
G	- The concentration may be biased high due to matrix interferences (i.e, co-elution) with non-target compound(s). The result should be considered estimated.
H	- The analysis of pH was performed beyond the regulatory-required holding time of 15 minutes from the time of sample collection.
I	- The lower value for the two columns has been reported due to obvious interference.

Report Format: Data Usability Report

Project Name:	NBHS IRA PSWS	**Lab Number:**	L1325663
Project Number:	115058	**Report Date:**	12/26/13

Data Qualifiers

M - Reporting Limit (RL) exceeds the MCP CAM Reporting Limit for this analyte.

NJ - Presumptive evidence of compound. This represents an estimated concentration for Tentatively Identified Compounds (TICs), where the identification is based on a mass spectral library search.

P - The RPD between the results for the two columns exceeds the method-specified criteria.

Q - The quality control sample exceeds the associated acceptance criteria. For DOD-related projects, LCS and/or Continuing Calibration Standard exceedences are also qualified on all associated sample results. Note: This flag is not applicable for matrix spike recoveries when the sample concentration is greater than 4x the spike added or for batch duplicate RPD when the sample concentrations are less than 5x the RL. (Metals only.)

R - Analytical results are from sample re-analysis.

RE - Analytical results are from sample re-extraction.

S - Analytical results are from modified screening analysis.

Report Format: Data Usability Report

Project Name: NBHS IRA PSWS **Lab Number:** L1325663
Project Number: 115058 **Report Date:** 12/26/13

REFERENCES

5 Methods for the Organic Chemical Analysis of Municipal and Industrial Wastewater. Appendix A, Part 136, 40 CFR (Code of Federal Regulations).

30 Standard Methods for the Examination of Water and Wastewater. APHA-AWWA-WPCF. 18th Edition. 1992.

74 Method 1664,Revision A: N-Hexane Extractable Material (HEM; Oil & Grease) and Silica Gel Treated N-Hexane Extractable Material (SGT-HEM; Non-polar Material) by Extraction and Gravimetry, EPA-821-R-98-002, February 1999.

LIMITATION OF LIABILITIES

Alpha Analytical performs services with reasonable care and diligence normal to the analytical testing laboratory industry. In the event of an error, the sole and exclusive responsibility of Alpha Analytical shall be to re-perform the work at it's own expense. In no event shall Alpha Analytical be held liable for any incidental, consequential or special damages, including but not limited to, damages in any way connected with the use of, interpretation of, information or analysis provided by Alpha Analytical.

We strongly urge our clients to comply with EPA protocol regarding sample volume, preservation, cooling, containers, sampling procedures, holding time and splitting of samples in the field.

Certification Information

Last revised December 11, 2013

The following analytes are not included in our NELAP Scope of Accreditation:

Westborough Facility
EPA 524.2: Acetone, 2-Butanone (Methyl ethyl ketone (MEK)), Tert-butyl alcohol, 2-Hexanone, Tetrahydrofuran, 1,3,5-Trichlorobenzene, 4-Methyl-2-pentanone (MIBK), Carbon disulfide, Diethyl ether.
EPA 8260C: 1,2,4,5-Tetramethylbenzene, 4-Ethyltoluene, Iodomethane (methyl iodide), Methyl methacrylate, Azobenzene.
EPA 8330A/B: PETN, Picric Acid, Nitroglycerine, 2,6-DANT, 2,4-DANT.
EPA 8270D: 1-Methylnaphthalene, Dimethylnaphthalene,1,4-Diphenylhydrazine.
EPA 625: 4-Chloroaniline, 4-Methylphenol.
SM4500: Soil: Total Phosphorus, TKN, NO2, NO3.
EPA 9071: Total Petroleum Hydrocarbons, Oil & Grease.

Mansfield Facility
EPA 8270D: Biphenyl.
EPA TO-15: Halothane, 2,4,4-Trimethyl-2-pentene, 2,4,4-Trimethyl-1-pentene, Thiophene, 2-Methylthiophene, 3-Methylthiophene, 2-Ethylthiophene, 1,2,3-Trimethylbenzene, Indan, Indene, 1,2,4,5-Tetramethylbenzene, Benzothiophene, 1-Methylnaphthalene.

The following analytes are included in our Massachusetts DEP Scope of Accreditation, Westborough Facility:

Drinking Water
EPA 200.8: Sb,As,Ba,Be,Cd,Cr,Cu,Pb,Ni,Se,Tl; **EPA 200.7**: Ba,Be,Ca,Cd,Cr,Cu,Na; **EPA 245.1:** Mercury;
EPA 300.0: Nitrate-N, Fluoride, Sulfate; **EPA 353.2**: Nitrate-N, Nitrite-N; **SM4500NO3-F**: Nitrate-N, Nitrite-N; **SM4500F-C, SM4500CN-CE, EPA 180.1, SM2130B, SM4500Cl-D, SM2320B, SM2540C, SM4500H-B**
EPA 332: Perchlorate.
Microbiology: **SM9215B; SM9223-P/A, SM9223B-Colilert-QT, Enterolert-QT.**

Non-Potable Water
EPA 200.8: Al,Sb,As,Be,Cd,Cr,Cu,Pb,Mn,Ni,Se,Ag,Tl,Zn;
EPA 200.7: Al,Sb,As,Be,Cd,Ca,Cr,Co,Cu,Fe,Pb,Mg,Mn,Mo,Ni,K,Se,Ag,Na,Sr,Ti,Tl,V,Zn;
EPA 245.1, SM4500H,B, EPA 120.1, SM2510B, SM2540C, SM2340B, SM2320B, SM4500CL-E, SM4500F-BC, SM426C, SM4500NH3-BH, **EPA 350.1**: Ammonia-N, **LACHAT 10-107-06-1-B**: Ammonia-N, **SM4500NO3-F,**
EPA 353.2: Nitrate-N**, SM4500NH3-BC-NES, EPA 351.1, SM4500P-E, SM4500P-B, E, SM5220D, EPA 410.4, SM5210B, SM5310C, SM4500CL-D, EPA 1664, SM14 510AC, EPA 420.1, SM4500-CN-CE, SM2540D.**
EPA 624: Volatile Halocarbons & Aromatics,
EPA 608: Chlordane, Toxaphene, Aldrin, alpha-BHC, beta-BHC, gamma-BHC, delta-BHC, Dieldrin, DDD, DDE, DDT, Endosulfan I, Endosulfan II, Endosulfan sulfate, Endrin, Endrin Aldehyde, Heptachlor, Heptachlor Epoxide, PCBs
EPA 625: SVOC (Acid/Base/Neutral Extractables), **EPA 600/4-81-045**: PCB-Oil.
Microbiology: **SM9223B-Colilert-QT; Enterolert-QT, SM9222D-MF**.

For a complete listing of analytes and methods, please contact your Alpha Project Manager.

CHAIN OF CUSTODY

PAGE ____ OF ____

ALPHA ANALYTICAL
Broad Class Chemistry
8 Walkup Drive, Westboro, MA 01581, Tel: 508-898-9220
320 Forbes Blvd, Mansfield, MA 02048, Tel: 508-822-9300

Date Rec'd in Lab: 12/18/13

ALPHA Job #: L1325663

Client Information

Client: TRC
Address: 650 Suffolk St
Lowell, MA 01854
Phone: 978-970-5600
Email: aleonard@trcsolutions.com
dsullivan

Additional Project Information:

Project Information

Project Name: NBHS IRA PSWS
Project Location: New Bedford, MA
Project #: 115058
Project Manager: David Sullivan
ALPHA Quote #:

Turn-Around Time

☒ Standard ☐ RUSH (only confirmed if pre-approved!)
Date Due: 5-day 12/26/13

PR, 12/26

Report Information - Data Deliverables

☐ ADEx ☒ EMAIL

Billing Information

☐ Same as Client info PO #: C115058

Regulatory Requirements & Project Information Requirements

☒ Yes ☐ No MA MCP Analytical Methods ☐ Yes ☐ No CT RCP Analytical Methods
☐ Yes ☐ No Matrix Spike Required on this SDG? (Required for MCP Inorganics)
☐ Yes ☐ No GW1 Standards (Info Required for Metals & EPH with Targets)
☐ Yes ☐ No NPDES RGP
☐ Other State /Fed Program MA Criteria MCP

ANALYSIS: ☐ 8260 ☒ 624 ☐ 524.2 (VOC); ☐ ABN ☐ PAH (SVOC); ☐ MCP 13 ☐ MCP 14 ☐ RCP 15 (METALS); ☐ RCRA5 ☐ RCRA8 ☐ PP13 (METALS); ☐ Ranges & Targets ☐ Ranges Only (EPH); ☐ Ranges & Targets ☐ Ranges Only (VPH); ☒ PCB ☐ PEST by M608; ☐ Quant Only ☐ Fingerprint (TPH); Oil + Grease; BOD; TSS by M160.2; pH by M150.1

SAMPLE INFO
Filtration: ☐ Field ☐ Lab to do
Preservation: ☐ Lab to do

ALPHA Lab ID (Lab Use Only)	Sample ID	Collection Date	Collection Time	Sample Matrix	Sampler Initials	VOC	SVOC	METALS	METALS	EPH	VPH	PCB	TPH	Oil + Grease	BOD	TSS	pH			Sample Comments	TOTAL # BOTTLES
25663 01	Effluent (GRAB)	12/18/13	07:30	E	KDJ	X								X			X				6
02	Effluent (comp)	12/17/13 - 12/18/13	1130 - 1130	E	KDJ							X			X	X					4
03	Effluent Round ① thru ④	12/17/13 12/18/13	1130 1700 2100 0730	E	KDJ	LAB COMP														Set of Vials collected within each 6 HR interval	12

Container Type	V						A		A	P	P	P			
Preservative	H						A			A	A	A			

Container Type
P= Plastic
A= Amber glass
V= Vial
G= Glass
B= Bacteria cup
C= Cube
O= Other
E= Encore
D= BOD Bottle

Preservative
A= None
B= HCl
C= HNO_3
D= H_2SO_4
E= NaOH
F= MeOH
G= $NaHSO_4$
H = $Na_2S_2O_3$
I= Ascorbic Acid
J = NH_4Cl
K= Zn Acetate
O= Other

Relinquished By:	Date/Time	Received By:	Date/Time
Kevin Jordan	12/18/13 10:22	Dan Bentz	12.18.13 1022

All samples submitted are subject to Alpha's Terms and Conditions. See reverse side.

FORM NO: 01-01 (rev. 12-Mar-2012)

Serial_No:12261312:47

CHAIN OF CUSTODY

PAGE____ OF____

ALPHA ANALYTICAL — World Class Chemistry

8 Walkup Drive, Westboro, MA 01581, Tel: 508-898-9220
320 Forbes Blvd, Mansfield, MA 02048, Tel: 508-822-9300

Date Rec'd in Lab: 12/18/13

ALPHA Job #: L1325663

Client Information

Client: TRC
Address: 650 Suffolk St
Lowell, MA 01854
Phone: 978-970-5600
Email: aleonard@trcsolutions.com
dsullivan

Additional Project Information:

Project Information

Project Name: NBHS IRA P8WS
Project Location: New Bedford, MA
Project #: 115058
Project Manager: David Sullivan
ALPHA Quote #:

Turn-Around Time

☒ Standard ☐ RUSH *(only confirmed if pre-approved!)*

Date Due: 5-day 12/26/13

Report Information - Data Deliverables

☐ ADEx ☒ EMAIL

Billing Information

☐ Same as Client info PO #: C115058

Regulatory Requirements & Project Information Requirements

☒ Yes ☐ No MA MCP Analytical Methods
☐ Yes ☐ No CT RCP Analytical Methods
☐ Yes ☐ No Matrix Spike Required on this SDG? (Required for MCP Inorganics)
☐ Yes ☐ No GW1 Standards (Info Required for Metals & EPH with Targets)
☐ Yes ☐ No NPDES RGP
☐ Other State /Fed Program MA Criteria MCP

ANALYSIS

ALPHA Lab ID (Lab Use Only)	Sample ID	Collection Date	Collection Time	Sample Matrix	Sampler Initials	VOC: ☐ 8260 ☒ 624 ☐ 524.2	SVOC: ☐ ABN ☐ PAH	METALS: ☐ MCP 13 ☐ MCP 14 ☐ RCP 15	METALS: ☐ RCRA5 ☐ RCRA8 ☐ PP13	EPH: ☐ Ranges & Targets ☐ Ranges Only	VPH: ☐ Ranges & Targets ☐ Ranges Only	☐ PEST ☒ PCB by M608	TPH: ☐ Quant Only ☐ Fingerprint	Oil + Grease	BOD	TSS by M160.2	pH by M150.1			Sample Comments	TOTAL # BOTTLES
25663 01	Effluent (GRAB)	12/18/13		E	KDJ	X								X			X				6
02	Effluent (comp)	12/17/13 - 12/18/13	1130 - 1130	E	KDJ							X			X	X					4
03	Effluent Round ① thru ④	12/17/13 12/18/13	1130 1700 2100 0730	E	KDJ	LAB COMP														Set of VOAs collected within each 6 HR interval	12
Container Type						V						A		A	P	P	P				
Preservative						H						A			A	A	A				

SAMPLE INFO

Filtration
☐ Field
☐ Lab to do

Preservation
☐ Lab to do

Container Type	Preservative
P= Plastic	A= None
A= Amber glass	B= HCl
V= Vial	C= HNO_3
G= Glass	D= H_2SO_4
B= Bacteria cup	E= NaOH
C= Cube	F= MeOH
O= Other	G= $NaHSO_4$
E= Encore	H = $Na_2S_2O_3$
D= BOD Bottle	I= Ascorbic Acid
	J = NH_4Cl
	K= Zn Acetate
	O= Other

Relinquished By:	Date/Time	Received By:	Date/Time
Kevin Jodoin	12/18/13 10:22	Dan Baez	12.18.13 1022

All samples submitted are subject to Alpha's Terms and Conditions. See reverse side.

FORM NO: 01-01 (rev. 12-Mar-2012)

ANALYTICAL REPORT

Lab Number:	L1405667
Client:	TRC Environmental Consultants Wannalancit Mills 650 Suffolk Street Lowell, MA 01854
ATTN:	David Sullivan
Phone:	(978) 656-3565
Project Name:	NBHS IRA POTW O+M
Project Number:	115058
Report Date:	03/26/14

The original project report/data package is held by Alpha Analytical. This report/data package is paginated and should be reproduced only in its entirety. Alpha Analytical holds no responsibility for results and/or data that are not consistent with the original.

Certifications & Approvals: MA (M-MA086), NY (11148), CT (PH-0574), NH (2003), NJ NELAP (MA935), RI (LAO00065), ME (MA00086), PA (68-03671), USDA (Permit #P-330-11-00240), NC (666), TX (T104704476), DOD (L2217), US Army Corps of Engineers.

Eight Walkup Drive, Westborough, MA 01581-1019
508-898-9220 (Fax) 508-898-9193 800-624-9220 - www.alphalab.com

Project Name: NBHS IRA POTW O+M
Project Number: 115058

Lab Number: L1405667
Report Date: 03/26/14

Alpha Sample ID	Client ID	Sample Location	Collection Date/Time
L1405667-01	EFFLUENT (GRAB)	NBHS NEW BEDFORD, MA	03/17/14 12:30
L1405667-02	EFFLUENT (COMP)	NBHS NEW BEDFORD, MA	03/18/14 09:00
L1405667-03	EFFLUENT ROUNDS 1-4	NBHS NEW BEDFORD, MA	03/18/14 09:00

Project Name: NBHS IRA POTW O+M **Lab Number:** L1405667
Project Number: 115058 **Report Date:** 03/26/14

Case Narrative

The samples were received in accordance with the Chain of Custody and no significant deviations were encountered during the preparation or analysis unless otherwise noted. Sample Receipt, Container Information, and the Chain of Custody are located at the back of the report.

Results contained within this report relate only to the samples submitted under this Alpha Lab Number and meet all of the requirements of NELAC, for all NELAC accredited parameters. The data presented in this report is organized by parameter (i.e. VOC, SVOC, etc.). Sample specific Quality Control data (i.e. Surrogate Spike Recovery) is reported at the end of the target analyte list for each individual sample, followed by the Laboratory Batch Quality Control at the end of each parameter. If a sample was re-analyzed or re-extracted due to a required quality control corrective action and if both sets of data are reported, the Laboratory ID of the re-analysis or re-extraction is designated with an "R" or "RE", respectively. When multiple Batch Quality Control elements are reported (e.g. more than one LCS), the associated samples for each element are noted in the grey shaded header line of each data table. Any Laboratory Batch, Sample Specific % recovery or RPD value that is outside the listed Acceptance Criteria is bolded in the report. Performance criteria for CAM and RCP methods allow for some LCS compound failures to occur and still be within method compliance. In these instances, the specific failures are not narrated but are noted in the associated QC table. This information is also incorporated in the Data Usability format for our Data Merger tool where it can be reviewed along with any associated usability implications. Soil/sediments, solids and tissues are reported on a dry weight basis unless otherwise noted. Definitions of all data qualifiers and acronyms used in this report are provided in the Glossary located at the back of the report.

In reference to questions H (CAM) or 4 (RCP) when "NO" is checked, the performance criteria for CAM and RCP methods allow for some quality control failures to occur and still be within method compliance. In these instances the specific failure is not narrated but noted in the associated QC table. The information is also incorporated in the Data Usability format of our Data Merger tool where it can be reviewed along with any associated usability implications.

Please see the associated ADEx data file for a comparison of laboratory reporting limits that were achieved with the regulatory Numerical Standards requested on the Chain of Custody.

HOLD POLICY
For samples submitted on hold, Alpha's policy is to hold samples (with the exception of Air canisters) free of charge for 21 calendar days from the date the project is completed. After 21 calendar days, we will dispose of all samples submitted including those put on hold unless you have contacted your Client Service Representative and made arrangements for Alpha to continue to hold the samples. Air canisters will be disposed after 3 business days from the date the project is completed.

Please contact Client Services at 800-624-9220 with any questions.

Project Name:	NBHS IRA POTW O+M	**Lab Number:**	L1405667
Project Number:	115058	**Report Date:**	03/26/14

Case Narrative (continued)

BOD, 5 Day

The analysis was performed with the method required holding time exceeded.

I, the undersigned, attest under the pains and penalties of perjury that, to the best of my knowledge and belief and based upon my personal inquiry of those responsible for providing the information contained in this analytical report, such information is accurate and complete. This certificate of analysis is not complete unless this page accompanies any and all pages of this report.

Authorized Signature: Kelly Stenstrom

Title: Technical Director/Representative

Date: 03/26/14

ORGANICS

VOLATILES

Project Name: NBHS IRA POTW O+M **Lab Number:** L1405667

Project Number: 115058 **Report Date:** 03/26/14

SAMPLE RESULTS

Lab ID:	L1405667-03	Date Collected:	03/18/14 09:00
Client ID:	EFFLUENT ROUNDS 1-4	Date Received:	03/19/14
Sample Location:	NBHS NEW BEDFORD, MA	Field Prep:	Not Specified
Matrix:	Water		
Analytical Method:	5,624		
Analytical Date:	03/21/14 13:56		
Analyst:	GT		

Parameter	Result	Qualifier	Units	RL	MDL	Dilution Factor
Volatile Organics by GC/MS - Westborough Lab						
Methylene chloride	ND		ug/l	5.0	--	1
1,1-Dichloroethane	ND		ug/l	1.5	--	1
Chloroform	ND		ug/l	1.5	--	1
Carbon tetrachloride	ND		ug/l	1.0	--	1
1,2-Dichloropropane	ND		ug/l	3.5	--	1
Dibromochloromethane	ND		ug/l	1.0	--	1
1,1,2-Trichloroethane	ND		ug/l	1.5	--	1
2-Chloroethylvinyl ether	ND		ug/l	10	--	1
Tetrachloroethene	ND		ug/l	1.5	--	1
Chlorobenzene	ND		ug/l	3.5	--	1
Trichlorofluoromethane	ND		ug/l	5.0	--	1
1,2-Dichloroethane	ND		ug/l	1.5	--	1
1,1,1-Trichloroethane	ND		ug/l	2.0	--	1
Bromodichloromethane	ND		ug/l	1.0	--	1
trans-1,3-Dichloropropene	ND		ug/l	1.5	--	1
cis-1,3-Dichloropropene	ND		ug/l	1.5	--	1
Bromoform	ND		ug/l	1.0	--	1
1,1,2,2-Tetrachloroethane	ND		ug/l	1.0	--	1
Benzene	ND		ug/l	1.0	--	1
Toluene	ND		ug/l	1.0	--	1
Ethylbenzene	ND		ug/l	1.0	--	1
Chloromethane	ND		ug/l	5.0	--	1
Bromomethane	ND		ug/l	5.0	--	1
Vinyl chloride	ND		ug/l	1.0	--	1
Chloroethane	ND		ug/l	2.0	--	1
1,1-Dichloroethene	ND		ug/l	1.0	--	1
trans-1,2-Dichloroethene	20		ug/l	1.5	--	1
cis-1,2-Dichloroethene[1]	140		ug/l	1.0	--	1
Trichloroethene	ND		ug/l	1.0	--	1
1,2-Dichlorobenzene	ND		ug/l	5.0	--	1
1,3-Dichlorobenzene	ND		ug/l	5.0	--	1

Project Name: NBHS IRA POTW O+M **Lab Number:** L1405667

Project Number: 115058 **Report Date:** 03/26/14

SAMPLE RESULTS

Lab ID: L1405667-03 Date Collected: 03/18/14 09:00

Client ID: EFFLUENT ROUNDS 1-4 Date Received: 03/19/14

Sample Location: NBHS NEW BEDFORD, MA Field Prep: Not Specified

Parameter	Result	Qualifier	Units	RL	MDL	Dilution Factor
Volatile Organics by GC/MS - Westborough Lab						
1,4-Dichlorobenzene	ND		ug/l	5.0	--	1
p/m-Xylene[1]	ND		ug/l	2.0	--	1
o-xylene[1]	ND		ug/l	1.0	--	1
Xylenes, Total[1]	ND		ug/l	1.0	--	1
Styrene[1]	ND		ug/l	1.0	--	1
Acetone[1]	ND		ug/l	10	--	1
Carbon disulfide[1]	ND		ug/l	5.0	--	1
2-Butanone[1]	ND		ug/l	10	--	1
Vinyl acetate[1]	ND		ug/l	10	--	1
4-Methyl-2-pentanone[1]	ND		ug/l	10	--	1
2-Hexanone[1]	ND		ug/l	10	--	1
Acrolein[1]	ND		ug/l	8.0	--	1
Acrylonitrile[1]	ND		ug/l	10	--	1
Dibromomethane[1]	ND		ug/l	1.0	--	1

Surrogate	% Recovery	Qualifier	Acceptance Criteria
Pentafluorobenzene	107		80-120
Fluorobenzene	119		80-120
4-Bromofluorobenzene	98		80-120

Project Name: NBHS IRA POTW O+M **Lab Number:** L1405667

Project Number: 115058 **Report Date:** 03/26/14

Method Blank Analysis
Batch Quality Control

Analytical Method: 5,624
Analytical Date: 03/21/14 12:09
Analyst: GT

Parameter	Result	Qualifier	Units	RL	MDL
Volatile Organics by GC/MS - Westborough Lab for sample(s): 03 Batch: WG677095-6					
Methylene chloride	ND		ug/l	5.0	--
1,1-Dichloroethane	ND		ug/l	1.5	--
Chloroform	ND		ug/l	1.5	--
Carbon tetrachloride	ND		ug/l	1.0	--
1,2-Dichloropropane	ND		ug/l	3.5	--
Dibromochloromethane	ND		ug/l	1.0	--
1,1,2-Trichloroethane	ND		ug/l	1.5	--
2-Chloroethylvinyl ether	ND		ug/l	10	--
Tetrachloroethene	ND		ug/l	1.5	--
Chlorobenzene	ND		ug/l	3.5	--
Trichlorofluoromethane	ND		ug/l	5.0	--
1,2-Dichloroethane	ND		ug/l	1.5	--
1,1,1-Trichloroethane	ND		ug/l	2.0	--
Bromodichloromethane	ND		ug/l	1.0	--
trans-1,3-Dichloropropene	ND		ug/l	1.5	--
cis-1,3-Dichloropropene	ND		ug/l	1.5	--
Bromoform	ND		ug/l	1.0	--
1,1,2,2-Tetrachloroethane	ND		ug/l	1.0	--
Benzene	ND		ug/l	1.0	--
Toluene	ND		ug/l	1.0	--
Ethylbenzene	ND		ug/l	1.0	--
Chloromethane	ND		ug/l	5.0	--
Bromomethane	ND		ug/l	5.0	--
Vinyl chloride	ND		ug/l	1.0	--
Chloroethane	ND		ug/l	2.0	--
1,1-Dichloroethene	ND		ug/l	1.0	--
trans-1,2-Dichloroethene	ND		ug/l	1.5	--
cis-1,2-Dichloroethene[1]	ND		ug/l	1.0	--
Trichloroethene	ND		ug/l	1.0	--
1,2-Dichlorobenzene	ND		ug/l	5.0	--
1,3-Dichlorobenzene	ND		ug/l	5.0	--

Project Name: NBHS IRA POTW O+M **Lab Number:** L1405667

Project Number: 115058 **Report Date:** 03/26/14

Method Blank Analysis
Batch Quality Control

Analytical Method: 5,624
Analytical Date: 03/21/14 12:09
Analyst: GT

Parameter	Result	Qualifier	Units	RL	MDL
Volatile Organics by GC/MS - Westborough Lab for sample(s): 03 Batch: WG677095-6					
1,4-Dichlorobenzene	ND		ug/l	5.0	--
p/m-Xylene[1]	ND		ug/l	2.0	--
o-xylene[1]	ND		ug/l	1.0	--
Xylenes, Total[1]	ND		ug/l	1.0	--
Styrene[1]	ND		ug/l	1.0	--
Acetone[1]	ND		ug/l	10	--
Carbon disulfide[1]	ND		ug/l	5.0	--
2-Butanone[1]	ND		ug/l	10	--
Vinyl acetate[1]	ND		ug/l	10	--
4-Methyl-2-pentanone[1]	ND		ug/l	10	--
2-Hexanone[1]	ND		ug/l	10	--
Acrolein[1]	ND		ug/l	8.0	--
Acrylonitrile[1]	ND		ug/l	10	--
Methyl tert butyl ether[1]	ND		ug/l	10	--
Dibromomethane[1]	ND		ug/l	1.0	--
1,4-Dioxane[1]	ND		ug/l	2000	--
Tert-Butyl Alcohol[1]	ND		ug/l	100	--
Tertiary-Amyl Methyl Ether[1]	ND		ug/l	20	--

Surrogate	%Recovery	Qualifier	Acceptance Criteria
Pentafluorobenzene	104		80-120
Fluorobenzene	115		80-120
4-Bromofluorobenzene	88		80-120

Lab Control Sample Analysis
Batch Quality Control

Project Name: NBHS IRA POTW O+M

Project Number: 115058

Lab Number: L1405667

Report Date: 03/26/14

Parameter	LCS %Recovery	Qual	LCSD %Recovery	Qual	%Recovery Limits	RPD	Qual	RPD Limits
Volatile Organics by GC/MS - Westborough Lab Associated sample(s): 03 Batch: WG677095-5								
Methylene chloride	93		-		70-111	-		30
1,1-Dichloroethane	96		-		78-116	-		30
Chloroform	100		-		86-111	-		30
Carbon tetrachloride	111		-		60-112	-		30
1,2-Dichloropropane	104		-		83-113	-		30
Dibromochloromethane	88		-		58-129	-		30
1,1,2-Trichloroethane	98		-		80-118	-		30
2-Chloroethylvinyl ether	101		-		69-124	-		30
Tetrachloroethene	92		-		80-126	-		30
Chlorobenzene	80		-		80-126	-		30
Trichlorofluoromethane	90		-		83-128	-		30
1,2-Dichloroethane	104		-		82-110	-		30
1,1,1-Trichloroethane	102		-		72-109	-		30
Bromodichloromethane	92		-		71-120	-		30
trans-1,3-Dichloropropene	86		-		73-106	-		30
cis-1,3-Dichloropropene	88		-		78-111	-		30
Bromoform	78		-		45-131	-		30
1,1,2,2-Tetrachloroethane	90		-		81-122	-		30
Benzene	114		-		84-116	-		30
Toluene	99		-		83-121	-		30
Ethylbenzene	92		-		84-123	-		30

Lab Control Sample Analysis
Batch Quality Control

Project Name: NBHS IRA POTW O+M
Project Number: 115058
Lab Number: L1405667
Report Date: 03/26/14

Parameter	LCS %Recovery	Qual	LCSD %Recovery	Qual	%Recovery Limits	RPD	Qual	RPD Limits
Volatile Organics by GC/MS - Westborough Lab Associated sample(s): 03 Batch: WG677095-5								
Chloromethane	109		-		70-144	-		30
Bromomethane	82		-		63-141	-		30
Vinyl chloride	115		-		56-118	-		30
Chloroethane	123		-		74-130	-		30
1,1-Dichloroethene	90		-		77-116	-		30
trans-1,2-Dichloroethene	91		-		81-121	-		30
cis-1,2-Dichloroethene[1]	96		-		85-110	-		30
Trichloroethene	103		-		84-118	-		30
1,2-Dichlorobenzene	86		-		78-128	-		30
1,3-Dichlorobenzene	78		-		77-125	-		30
1,4-Dichlorobenzene	81		-		77-125	-		30
p/m-Xylene[1]	100		-		81-121	-		30
o-Xylene[1]	90		-		81-124	-		30
Styrene[1]	97		-		84-133	-		30
Acetone[1]	93		-		40-160	-		30
Carbon disulfide[1]	85		-		54-134	-		30
2-Butanone[1]	107		-		57-116	-		30
Vinyl acetate[1]	90		-		40-160	-		30
4-Methyl-2-pentanone[1]	119		-		79-125	-		30
2-Hexanone[1]	118		-		78-120	-		30
Acrolein[1]	87		-		40-160	-		30

Lab Control Sample Analysis

Batch Quality Control

Project Name: NBHS IRA POTW O+M

Project Number: 115058

Lab Number: L1405667

Report Date: 03/26/14

Parameter	LCS %Recovery	Qual	LCSD %Recovery	Qual	%Recovery Limits	RPD	Qual	RPD Limits
Volatile Organics by GC/MS - Westborough Lab Associated sample(s): 03 Batch: WG677095-5								
Acrylonitrile[1]	96		-		66-123	-		30
Methyl tert butyl ether[1]	85		-		57-126	-		30
Dibromomethane[1]	94		-		65-126	-		30
1,4-Dioxane[1]	76		-		74-121	-		30
tert-Butyl Alcohol[1]	99		-		52-114	-		30
Tertiary-Amyl Methyl Ether[1]	**113**	Q	-		66-111	-		30

Surrogate	LCS %Recovery	Qual	LCSD %Recovery	Qual	Acceptance Criteria
Pentafluorobenzene	103				80-120
Fluorobenzene	115				80-120
4-Bromofluorobenzene	88				80-120

Matrix Spike Analysis
Batch Quality Control

Project Name: NBHS IRA POTW O+M
Project Number: 115058

Lab Number: L1405667
Report Date: 03/26/14

Parameter	Native Sample	MS Added	MS Found	MS %Recovery	Qual	MSD Found	MSD %Recovery	Qual	Recovery Limits	RPD	Qual	RPD Limits
Volatile Organics by GC/MS - Westborough Lab Associated sample(s): 03 QC Batch ID: WG677095-4 QC Sample: L1405725-02 Client ID: MS Sample												
Methylene chloride	ND	20	24	**119**	Q	-	-		70-111	-		30
1,1-Dichloroethane	ND	20	24	**121**	Q	-	-		78-116	-		30
Chloroform	1.6	20	24	**115**	Q	-	-		86-111	-		30
Carbon tetrachloride	ND	20	24	**121**	Q	-	-		60-112	-		30
1,2-Dichloropropane	ND	20	27	**133**	Q	-	-		83-113	-		30
Dibromochloromethane	ND	20	20	101		-	-		58-129	-		30
1,1,2-Trichloroethane	ND	20	22	110		-	-		80-118	-		30
2-Chloroethylvinyl ether	ND	20	21	104		-	-		69-124	-		30
Tetrachloroethene	ND	20	20	101		-	-		80-126	-		30
Chlorobenzene	ND	20	17	87		-	-		80-126	-		30
Trichlorofluoromethane	ND	20	23	114		-	-		83-128	-		30
1,2-Dichloroethane	ND	20	22	**112**	Q	-	-		82-110	-		30
1,1,1-Trichloroethane	ND	20	22	**112**	Q	-	-		72-109	-		30
Bromodichloromethane	1.2	20	22	103		-	-		71-120	-		30
trans-1,3-Dichloropropene	ND	20	8.8	**44**	Q	-	-		73-106	-		30
cis-1,3-Dichloropropene	ND	20	2.2	**11**	Q	-	-		78-111	-		30
Bromoform	ND	20	18	89		-	-		45-131	-		30
1,1,2,2-Tetrachloroethane	ND	20	20	102		-	-		81-122	-		30
Benzene	ND	20	24	**122**	Q	-	-		84-116	-		30
Toluene	ND	20	21	104		-	-		83-121	-		30
Ethylbenzene	ND	20	20	102		-	-		84-123	-		30

Matrix Spike Analysis
Batch Quality Control

Project Name: NBHS IRA POTW O+M
Project Number: 115058

Lab Number: L1405667
Report Date: 03/26/14

Parameter	Native Sample	MS Added	MS Found	MS %Recovery	Qual	MSD Found	MSD %Recovery	Qual	Recovery Limits	RPD	Qual	RPD Limits
Volatile Organics by GC/MS - Westborough Lab Associated sample(s): 03 QC Batch ID: WG677095-4 QC Sample: L1405725-02 Client ID: MS Sample												
Chloromethane	ND	20	20	98		-	-		70-144	-		30
Bromomethane	ND	20	ND	**0**	Q	-	-		63-141	-		30
Vinyl chloride	ND	20	26	**128**	Q	-	-		56-118	-		30
Chloroethane	ND	20	23	116		-	-		74-130	-		30
1,1-Dichloroethene	ND	20	22	112		-	-		77-116	-		30
trans-1,2-Dichloroethene	ND	20	23	116		-	-		81-121	-		30
cis-1,2-Dichloroethene[1]	ND	20	22	110		-	-		85-110	-		30
Trichloroethene	ND	20	23	115		-	-		84-118	-		30
1,2-Dichlorobenzene	ND	20	18	88		-	-		78-128	-		30
1,3-Dichlorobenzene	ND	20	16	81		-	-		77-125	-		30
1,4-Dichlorobenzene	ND	20	17	87		-	-		77-125	-		30
p/m-Xylene[1]	ND	40	42	106		-	-		81-121	-		30
o-Xylene[1]	ND	20	20	98		-	-		81-124	-		30
Styrene[1]	ND	20	20	98		-	-		84-133	-		30
Acetone[1]	ND	50	52	105		-	-		40-160	-		30
Carbon disulfide[1]	ND	20	22	108		-	-		54-134	-		30
2-Butanone[1]	ND	50	63	**127**	Q	-	-		57-116	-		30
Vinyl acetate[1]	ND	40	42	105		-	-		40-160	-		30
4-Methyl-2-pentanone[1]	ND	50	63	**126**	Q	-	-		79-125	-		30
2-Hexanone[1]	ND	50	62	**124**	Q	-	-		78-120	-		30
Acrolein[1]	ND	40	29	72		-	-		40-160	-		30

Matrix Spike Analysis
Batch Quality Control

Project Name: NBHS IRA POTW O+M
Project Number: 115058

Lab Number: L1405667
Report Date: 03/26/14

Parameter	Native Sample	MS Added	MS Found	MS %Recovery	Qual	MSD Found	MSD %Recovery	Qual	Recovery Limits	RPD	Qual	RPD Limits
Volatile Organics by GC/MS - Westborough Lab Associated sample(s): 03 QC Batch ID: WG677095-4 QC Sample: L1405725-02 Client ID: MS Sample												
Acrylonitrile[1]	ND	40	43	108		-	-		66-123	-		30
Dibromomethane[1]	ND	20	20	102		-	-		65-126	-		30

Surrogate	MS % Recovery	MS Qualifier	MSD % Recovery	MSD Qualifier	Acceptance Criteria
4-Bromofluorobenzene	89				80-120
Fluorobenzene	113				80-120
Pentafluorobenzene	104				80-120

Lab Duplicate Analysis
Batch Quality Control

Project Name: NBHS IRA POTW O+M
Project Number: 115058

Lab Number: L1405667
Report Date: 03/26/14

Parameter	Native Sample	Duplicate Sample	Units	RPD	Qual	RPD Limits
Volatile Organics by GC/MS - Westborough Lab Associated sample(s): 03 QC Batch ID: WG677095-3 QC Sample: L1405690-01 Client ID: DUP Sample						
Methylene chloride	ND	ND	ug/l	NC		30
1,1-Dichloroethane	ND	ND	ug/l	NC		30
Chloroform	ND	ND	ug/l	NC		30
Carbon tetrachloride	ND	ND	ug/l	NC		30
1,2-Dichloropropane	ND	ND	ug/l	NC		30
Dibromochloromethane	ND	ND	ug/l	NC		30
1,1,2-Trichloroethane	ND	ND	ug/l	NC		30
2-Chloroethylvinyl ether	ND	ND	ug/l	NC		30
Tetrachloroethene	ND	ND	ug/l	NC		30
Chlorobenzene	ND	ND	ug/l	NC		30
Trichlorofluoromethane	ND	ND	ug/l	NC		30
1,2-Dichloroethane	ND	ND	ug/l	NC		30
1,1,1-Trichloroethane	ND	ND	ug/l	NC		30
Bromodichloromethane	ND	ND	ug/l	NC		30
trans-1,3-Dichloropropene	ND	ND	ug/l	NC		30
cis-1,3-Dichloropropene	ND	ND	ug/l	NC		30
Bromoform	ND	ND	ug/l	NC		30
1,1,2,2-Tetrachloroethane	ND	ND	ug/l	NC		30
Benzene	ND	ND	ug/l	NC		30

Lab Duplicate Analysis
Batch Quality Control

Project Name: NBHS IRA POTW O+M
Project Number: 115058

Lab Number: L1405667
Report Date: 03/26/14

Parameter	Native Sample	Duplicate Sample	Units	RPD	RPD Limits
Volatile Organics by GC/MS - Westborough Lab Associated sample(s): 03 QC Batch ID: WG677095-3 QC Sample: L1405690-01 Client ID: DUP Sample					
Toluene	ND	ND	ug/l	NC	30
Ethylbenzene	ND	ND	ug/l	NC	30
Chloromethane	ND	ND	ug/l	NC	30
Bromomethane	ND	ND	ug/l	NC	30
Vinyl chloride	ND	ND	ug/l	NC	30
Chloroethane	ND	ND	ug/l	NC	30
1,1-Dichloroethene	ND	ND	ug/l	NC	30
trans-1,2-Dichloroethene	ND	ND	ug/l	NC	30
cis-1,2-Dichloroethene[1]	ND	ND	ug/l	NC	30
Trichloroethene	ND	ND	ug/l	NC	30
1,2-Dichlorobenzene	ND	ND	ug/l	NC	30
1,3-Dichlorobenzene	ND	ND	ug/l	NC	30
1,4-Dichlorobenzene	ND	ND	ug/l	NC	30
p/m-Xylene[1]	ND	ND	ug/l	NC	30
o-Xylene[1]	ND	ND	ug/l	NC	30
Xylene (Total)[1]	ND	ND	ug/l	NC	30
Styrene[1]	ND	ND	ug/l	NC	30
Acetone[1]	ND	ND	ug/l	NC	30
Carbon disulfide[1]	ND	ND	ug/l	NC	30

Lab Duplicate Analysis
Batch Quality Control

Project Name: NBHS IRA POTW O+M
Project Number: 115058

Lab Number: L1405667
Report Date: 03/26/14

Parameter	Native Sample	Duplicate Sample	Units	RPD	RPD Limits
Volatile Organics by GC/MS - Westborough Lab Associated sample(s): 03 QC Batch ID: WG677095-3 QC Sample: L1405690-01 Client ID: DUP Sample					
2-Butanone[1]	ND	ND	ug/l	NC	30
Vinyl acetate[1]	ND	ND	ug/l	NC	30
4-Methyl-2-pentanone[1]	ND	ND	ug/l	NC	30
2-Hexanone[1]	ND	ND	ug/l	NC	30
Acrylonitrile[1]	ND	ND	ug/l	NC	30
Dibromomethane[1]	ND	ND	ug/l	NC	30

Surrogate	%Recovery	Qualifier	%Recovery	Qualifier	Acceptance Criteria
Pentafluorobenzene	107		106		80-120
Fluorobenzene	115		114		80-120
4-Bromofluorobenzene	99		101		80-120

PCBS

Project Name: NBHS IRA POTW O+M **Lab Number:** L1405667

Project Number: 115058 **Report Date:** 03/26/14

SAMPLE RESULTS

Lab ID:	L1405667-02	Date Collected:	03/18/14 09:00
Client ID:	EFFLUENT (COMP)	Date Received:	03/19/14
Sample Location:	NBHS NEW BEDFORD, MA	Field Prep:	Not Specified
Matrix:	Water	Extraction Method:	EPA 608
Analytical Method:	5,608	Extraction Date:	03/20/14 04:34
Analytical Date:	03/20/14 14:38	Cleanup Method1:	EPA 3665A
Analyst:	JW	Cleanup Date1:	03/20/14
		Cleanup Method2:	EPA 3660B
		Cleanup Date2:	03/20/14

Parameter	Result	Qualifier	Units	RL	MDL	Dilution Factor	Column
Polychlorinated Biphenyls by GC - Westborough Lab							
Aroclor 1016	ND		ug/l	0.250	--	1	A
Aroclor 1221	ND		ug/l	0.250	--	1	A
Aroclor 1232	ND		ug/l	0.250	--	1	A
Aroclor 1242	ND		ug/l	0.250	--	1	A
Aroclor 1248	ND		ug/l	0.250	--	1	A
Aroclor 1254	ND		ug/l	0.250	--	1	A
Aroclor 1260	ND		ug/l	0.200	--	1	A

Surrogate	% Recovery	Qualifier	Acceptance Criteria	Column
2,4,5,6-Tetrachloro-m-xylene	78		30-150	A
Decachlorobiphenyl	76		30-150	A

Project Name: NBHS IRA POTW O+M

Project Number: 115058

Lab Number: L1405667

Report Date: 03/26/14

Method Blank Analysis
Batch Quality Control

Analytical Method: 5,608
Analytical Date: 03/20/14 15:04
Analyst: JW

Extraction Method: EPA 608
Extraction Date: 03/20/14 04:34
Cleanup Method1: EPA 3665A
Cleanup Date1: 03/20/14
Cleanup Method2: EPA 3660B
Cleanup Date2: 03/20/14

Parameter	Result	Qualifier	Units	RL	MDL	Column
Polychlorinated Biphenyls by GC - Westborough Lab for sample(s): 02 Batch: WG676650-1						
Aroclor 1016	ND		ug/l	0.250	--	A
Aroclor 1221	ND		ug/l	0.250	--	A
Aroclor 1232	ND		ug/l	0.250	--	A
Aroclor 1242	ND		ug/l	0.250	--	A
Aroclor 1248	ND		ug/l	0.250	--	A
Aroclor 1254	ND		ug/l	0.250	--	A
Aroclor 1260	ND		ug/l	0.200	--	A

Surrogate	%Recovery	Qualifier	Acceptance Criteria	Column
2,4,5,6-Tetrachloro-m-xylene	68		30-150	A
Decachlorobiphenyl	66		30-150	A

Matrix Spike Analysis
Batch Quality Control

Project Name: NBHS IRA POTW O+M
Project Number: 115058

Lab Number: L1405667
Report Date: 03/26/14

Parameter	Native Sample	MS Added	MS Found	MS %Recovery	Qual	MSD Found	MSD %Recovery	Qual	Recovery Limits	RPD	Qual	RPD Limits	Column
Polychlorinated Biphenyls by GC - Westborough Lab Associated sample(s): 02 QC Batch ID: WG676650-3 QC Sample: L1405735-01 Client ID: MS Sample													
Aroclor 1016	ND	1	0.851	85		-	-		40-140	-		50	A
Aroclor 1260	ND	1	0.772	77		-	-		40-140	-		50	A

Surrogate	MS % Recovery	MS Qualifier	MSD % Recovery	MSD Qualifier	Acceptance Criteria	Column
2,4,5,6-Tetrachloro-m-xylene	78				30-150	A
Decachlorobiphenyl	64				30-150	A

Lab Control Sample Analysis

Batch Quality Control

Project Name: NBHS IRA POTW O+M

Project Number: 115058

Lab Number: L1405667

Report Date: 03/26/14

Parameter	LCS %Recovery	Qual	LCSD %Recovery	Qual	%Recovery Limits	RPD	Qual	RPD Limits	Column
Polychlorinated Biphenyls by GC - Westborough Lab Associated sample(s): 02 Batch: WG676650-2									
Aroclor 1016	84		-		40-140	-		50	A
Aroclor 1260	82		-		40-140	-		50	A

Surrogate	LCS %Recovery	Qual	LCSD %Recovery	Qual	Acceptance Criteria	Column
2,4,5,6-Tetrachloro-m-xylene	80				30-150	A
Decachlorobiphenyl	77				30-150	A

Lab Duplicate Analysis
Batch Quality Control

Project Name: NBHS IRA POTW O+M
Project Number: 115058

Lab Number: L1405667
Report Date: 03/26/14

Parameter	Native Sample	Duplicate Sample	Units	RPD	Qual	RPD Limits	
Polychlorinated Biphenyls by GC - Westborough Lab Associated sample(s): 02 QC Batch ID: WG676650-4 QC Sample: L1405667-02 Client ID: EFFLUENT (COMP)							
Aroclor 1016	ND	ND	ug/l	NC		50	A
Aroclor 1221	ND	ND	ug/l	NC		50	A
Aroclor 1232	ND	ND	ug/l	NC		50	A
Aroclor 1242	ND	ND	ug/l	NC		50	A
Aroclor 1248	ND	ND	ug/l	NC		50	A
Aroclor 1254	ND	ND	ug/l	NC		50	A
Aroclor 1260	ND	ND	ug/l	NC		50	A

Surrogate	%Recovery	Qualifier	%Recovery	Qualifier	Acceptance Criteria	Column
2,4,5,6-Tetrachloro-m-xylene	78		80		30-150	A
Decachlorobiphenyl	76		76		30-150	A

INORGANICS
&
MISCELLANEOUS

Project Name: NBHS IRA POTW O+M
Project Number: 115058

Lab Number: L1405667
Report Date: 03/26/14

SAMPLE RESULTS

Lab ID: L1405667-01
Client ID: EFFLUENT (GRAB)
Sample Location: NBHS NEW BEDFORD, MA
Matrix: Water

Date Collected: 03/17/14 12:30
Date Received: 03/19/14
Field Prep: Not Specified

Parameter	Result	Qualifier	Units	RL	MDL	Dilution Factor	Date Prepared	Date Analyzed	Analytical Method	Analyst
General Chemistry - Westborough Lab										
pH (H)	7.2		SU	-	NA	1	-	03/19/14 22:24	30,4500H+-B	EL
BOD, 5 day	ND		mg/l	2.0	NA	1	03/19/14 20:25	03/24/14 14:00	30,5210B	SE
Oil & Grease, Hem-Grav	ND		mg/l	4.0	--	1	03/24/14 09:45	03/24/14 11:30	74,1664A	ML

Project Name: NBHS IRA POTW O+M
Project Number: 115058

Lab Number: L1405667
Report Date: 03/26/14

SAMPLE RESULTS

Lab ID: L1405667-02
Client ID: EFFLUENT (COMP)
Sample Location: NBHS NEW BEDFORD, MA
Matrix: Water

Date Collected: 03/18/14 09:00
Date Received: 03/19/14
Field Prep: Not Specified

Parameter	Result	Qualifier	Units	RL	MDL	Dilution Factor	Date Prepared	Date Analyzed	Analytical Method	Analyst
General Chemistry - Westborough Lab										
Solids, Total Suspended	ND		mg/l	5.0	NA	1	-	03/20/14 12:10	30,2540D	DW

Project Name: NBHS IRA POTW O+M **Lab Number:** L1405667

Project Number: 115058 **Report Date:** 03/26/14

Method Blank Analysis
Batch Quality Control

Parameter	Result	Qualifier	Units	RL	MDL	Dilution Factor	Date Prepared	Date Analyzed	Analytical Method	Analyst
General Chemistry - Westborough Lab for sample(s): 01 Batch: WG676581-1										
BOD, 5 day	ND		mg/l	2.0	NA	1	03/19/14 20:25	03/24/14 14:00	30,5210B	SE
General Chemistry - Westborough Lab for sample(s): 02 Batch: WG676664-1										
Solids, Total Suspended	ND		mg/l	5.0	NA	1	-	03/20/14 12:10	30,2540D	DW
General Chemistry - Westborough Lab for sample(s): 01 Batch: WG677441-1										
Oil & Grease, Hem-Grav	ND		mg/l	4.0	--	1	03/24/14 09:45	03/24/14 11:30	74,1664A	ML

Lab Control Sample Analysis

Batch Quality Control

Project Name: NBHS IRA POTW O+M

Project Number: 115058

Lab Number: L1405667

Report Date: 03/26/14

Parameter	LCS %Recovery	Qual	LCSD %Recovery	Qual	%Recovery Limits	RPD	Qual	RPD Limits
General Chemistry - Westborough Lab Associated sample(s): 01 Batch: WG676581-2								
BOD, 5 day	101		-		85-115	-		20
General Chemistry - Westborough Lab Associated sample(s): 01 Batch: WG676605-1								
pH	100		-		99-101	-		5
General Chemistry - Westborough Lab Associated sample(s): 01 Batch: WG677441-2								
Oil & Grease, Hem-Grav	88		-		78-114	-		18

Matrix Spike Analysis
Batch Quality Control

Project Name: NBHS IRA POTW O+M
Project Number: 115058
Lab Number: L1405667
Report Date: 03/26/14

Parameter	Native Sample	MS Added	MS Found	MS %Recovery	Qual	MSD Found	MSD %Recovery	Qual	Recovery Limits	RPD	Qual	RPD Limits
General Chemistry - Westborough Lab Associated sample(s): 01 QC Batch ID: WG676581-4 QC Sample: L1405649-02 Client ID: MS Sample												
BOD, 5 day	ND	100	100	102		-	-		50-145	-		35
General Chemistry - Westborough Lab Associated sample(s): 01 QC Batch ID: WG677441-4 QC Sample: L1405667-01 Client ID: EFFLUENT (GRAB)												
Oil & Grease, Hem-Grav	ND	44.4	37	84		-	-		78-114	-		18

Lab Duplicate Analysis
Batch Quality Control

Project Name: NBHS IRA POTW O+M
Project Number: 115058

Lab Number: L1405667
Report Date: 03/26/14

Parameter	Native Sample	Duplicate Sample	Units	RPD	Qual	RPD Limits
General Chemistry - Westborough Lab Associated sample(s): 01 QC Batch ID: WG676581-3 QC Sample: L1405649-01 Client ID: DUP Sample						
BOD, 5 day	96	98	mg/l	2		35
General Chemistry - Westborough Lab Associated sample(s): 01 QC Batch ID: WG676605-2 QC Sample: L1405673-01 Client ID: DUP Sample						
pH	9.2	9.3	SU	1		5
General Chemistry - Westborough Lab Associated sample(s): 02 QC Batch ID: WG676664-2 QC Sample: L1405649-01 Client ID: DUP Sample						
Solids, Total Suspended	110	100	mg/l	10		29
General Chemistry - Westborough Lab Associated sample(s): 01 QC Batch ID: WG677441-3 QC Sample: L1405690-01 Client ID: DUP Sample						
Oil & Grease, Hem-Grav	ND	ND	mg/l	NC		18

Project Name: NBHS IRA POTW O+M
Project Number: 115058

Lab Number: L1405667
Report Date: 03/26/14

Sample Receipt and Container Information

Were project specific reporting limits specified? YES

Reagent H2O Preserved Vials Frozen on: NA

Cooler Information	Custody Seal
Cooler	
A	Absent

Container Information

Container ID	Container Type	Cooler	pH	Temp deg C	Pres	Seal	Analysis(*)
L1405667-01A	Amber 1000ml HCl preserved	A	N/A	3.6	Y	Absent	OG-1664(28)
L1405667-01B	Amber 1000ml HCl preserved	A	N/A	3.6	Y	Absent	OG-1664(28)
L1405667-01C	Amber 1000ml unpreserved	A	8	3.6	Y	Absent	BOD-5210(2),PH-4500(.01)
L1405667-02A	Amber 1000ml unpreserved	A	8	3.6	Y	Absent	PCB-608(7)
L1405667-02B	Amber 1000ml unpreserved	A	8	3.6	Y	Absent	PCB-608(7)
L1405667-02C	Amber 1000ml unpreserved	A	8	3.6	Y	Absent	TSS-2540(7)
L1405667-03A	Vial Na2S2O3 preserved	A	N/A	3.6	Y	Absent	624(3)
L1405667-03B	Vial Na2S2O3 preserved	A	N/A	3.6	Y	Absent	624(3)
L1405667-03C	Vial Na2S2O3 preserved	A	N/A	3.6	Y	Absent	624(3)
L1405667-03D	Vial Na2S2O3 preserved	A	N/A	3.6	Y	Absent	624(3)
L1405667-03E	Vial Na2S2O3 preserved	A	N/A	3.6	Y	Absent	624(3)
L1405667-03F	Vial Na2S2O3 preserved	A	N/A	3.6	Y	Absent	624(3)
L1405667-03G	Vial Na2S2O3 preserved	A	N/A	3.6	Y	Absent	624(3)
L1405667-03H	Vial Na2S2O3 preserved	A	N/A	3.6	Y	Absent	624(3)

*Values in parentheses indicate holding time in days

Project Name:	NBHS IRA POTW O+M	**Lab Number:**	L1405667
Project Number:	115058	**Report Date:**	03/26/14

GLOSSARY

Acronyms

EDL	- Estimated Detection Limit: This value represents the level to which target analyte concentrations are reported as estimated values, when those target analyte concentrations are quantified below the reporting limit (RL). The EDL includes any adjustments from dilutions, concentrations or moisture content, where applicable. The use of EDLs is specific to the analysis of PAHs using Solid-Phase Microextraction (SPME).
EPA	- Environmental Protection Agency.
LCS	- Laboratory Control Sample: A sample matrix, free from the analytes of interest, spiked with verified known amounts of analytes or a material containing known and verified amounts of analytes.
LCSD	- Laboratory Control Sample Duplicate: Refer to LCS.
LFB	- Laboratory Fortified Blank: A sample matrix, free from the analytes of interest, spiked with verified known amounts of analytes or a material containing known and verified amounts of analytes.
MDL	- Method Detection Limit: This value represents the level to which target analyte concentrations are reported as estimated values, when those target analyte concentrations are quantified below the reporting limit (RL). The MDL includes any adjustments from dilutions, concentrations or moisture content, where applicable.
MS	- Matrix Spike Sample: A sample prepared by adding a known mass of target analyte to a specified amount of matrix sample for which an independent estimate of target analyte concentration is available.
MSD	- Matrix Spike Sample Duplicate: Refer to MS.
NA	- Not Applicable.
NC	- Not Calculated: Term is utilized when one or more of the results utilized in the calculation are non-detect at the parameter's reporting unit.
NI	- Not Ignitable.
RL	- Reporting Limit: The value at which an instrument can accurately measure an analyte at a specific concentration. The RL includes any adjustments from dilutions, concentrations or moisture content, where applicable.
RPD	- Relative Percent Difference: The results from matrix and/or matrix spike duplicates are primarily designed to assess the precision of analytical results in a given matrix and are expressed as relative percent difference (RPD). Values which are less than five times the reporting limit for any individual parameter are evaluated by utilizing the absolute difference between the values; although the RPD value will be provided in the report.
SRM	- Standard Reference Material: A reference sample of a known or certified value that is of the same or similar matrix as the associated field samples.

Footnotes

1	- The reference for this analyte should be considered modified since this analyte is absent from the target analyte list of the original method.

Terms

Analytical Method: Both the document from which the method originates and the analytical reference method. (Example: EPA 8260B is shown as 1,8260B.) The codes for the reference method documents are provided in the References section of the Addendum.

Data Qualifiers

A	- Spectra identified as "Aldol Condensation Product".
B	- The analyte was detected above the reporting limit in the associated method blank. Flag only applies to associated field samples that have detectable concentrations of the analyte at less than ten times (10x) the concentration found in the blank. For MCP-related projects, flag only applies to associated field samples that have detectable concentrations of the analyte at less than ten times (10x) the concentration found in the blank. For DOD-related projects, flag only applies to associated field samples that have detectable concentrations of the analyte at less than ten times (10x) the concentration found in the blank AND the analyte was detected above one-half the reporting limit (or above the reporting limit for common lab contaminants) in the associated method blank. For NJ-Air-related projects, flag only applies to associated field samples that have detectable concentrations of the analyte above the reporting limit.
C	- Co-elution: The target analyte co-elutes with a known lab standard (i.e. surrogate, internal standards, etc.) for co-extracted analyses.
D	- Concentration of analyte was quantified from diluted analysis. Flag only applies to field samples that have detectable concentrations of the analyte.
E	- Concentration of analyte exceeds the range of the calibration curve and/or linear range of the instrument.
G	- The concentration may be biased high due to matrix interferences (i.e, co-elution) with non-target compound(s). The result should be considered estimated.
H	- The analysis of pH was performed beyond the regulatory-required holding time of 15 minutes from the time of sample collection.
I	- The lower value for the two columns has been reported due to obvious interference.

Report Format: Data Usability Report

Project Name:	NBHS IRA POTW O+M	**Lab Number:**	L1405667
Project Number:	115058	**Report Date:**	03/26/14

Data Qualifiers

M - Reporting Limit (RL) exceeds the MCP CAM Reporting Limit for this analyte.

NJ - Presumptive evidence of compound. This represents an estimated concentration for Tentatively Identified Compounds (TICs), where the identification is based on a mass spectral library search.

P - The RPD between the results for the two columns exceeds the method-specified criteria.

Q - The quality control sample exceeds the associated acceptance criteria. For DOD-related projects, LCS and/or Continuing Calibration Standard exceedences are also qualified on all associated sample results. Note: This flag is not applicable for matrix spike recoveries when the sample concentration is greater than 4x the spike added or for batch duplicate RPD when the sample concentrations are less than 5x the RL. (Metals only.)

R - Analytical results are from sample re-analysis.

RE - Analytical results are from sample re-extraction.

S - Analytical results are from modified screening analysis.

J - Estimated value. This represents an estimated concentration for Tentatively Identified Compounds (TICs).

ND - Not detected at the reporting limit (RL) for the sample.

Report Format: Data Usability Report

REFERENCES

5 Methods for the Organic Chemical Analysis of Municipal and Industrial Wastewater. Appendix A, Part 136, 40 CFR (Code of Federal Regulations).

30 Standard Methods for the Examination of Water and Wastewater. APHA-AWWA-WPCF. 18th Edition. 1992.

74 Method 1664,Revision A: N-Hexane Extractable Material (HEM; Oil & Grease) and Silica Gel Treated N-Hexane Extractable Material (SGT-HEM; Non-polar Material) by Extraction and Gravimetry, EPA-821-R-98-002, February 1999.

LIMITATION OF LIABILITIES

Alpha Analytical performs services with reasonable care and diligence normal to the analytical testing laboratory industry. In the event of an error, the sole and exclusive responsibility of Alpha Analytical shall be to re-perform the work at it's own expense. In no event shall Alpha Analytical be held liable for any incidental, consequential or special damages, including but not limited to, damages in any way connected with the use of, interpretation of, information or analysis provided by Alpha Analytical.

We strongly urge our clients to comply with EPA protocol regarding sample volume, preservation, cooling, containers, sampling procedures, holding time and splitting of samples in the field.

Certification Information

Last revised December 11, 2013

The following analytes are not included in our NELAP Scope of Accreditation:

Westborough Facility
EPA 524.2: Acetone, 2-Butanone (Methyl ethyl ketone (MEK)), Tert-butyl alcohol, 2-Hexanone, Tetrahydrofuran, 1,3,5-Trichlorobenzene, 4-Methyl-2-pentanone (MIBK), Carbon disulfide, Diethyl ether.
EPA 8260C: 1,2,4,5-Tetramethylbenzene, 4-Ethyltoluene, Iodomethane (methyl iodide), Methyl methacrylate, Azobenzene.
EPA 8330A/B: PETN, Picric Acid, Nitroglycerine, 2,6-DANT, 2,4-DANT.
EPA 8270D: 1-Methylnaphthalene, Dimethylnaphthalene,1,4-Diphenylhydrazine.
EPA 625: 4-Chloroaniline, 4-Methylphenol.
SM4500: Soil: Total Phosphorus, TKN, NO2, NO3.
EPA 9071: Total Petroleum Hydrocarbons, Oil & Grease.

Mansfield Facility
EPA 8270D: Biphenyl.
EPA TO-15: Halothane, 2,4,4-Trimethyl-2-pentene, 2,4,4-Trimethyl-1-pentene, Thiophene, 2-Methylthiophene, 3-Methylthiophene, 2-Ethylthiophene, 1,2,3-Trimethylbenzene, Indan, Indene, 1,2,4,5-Tetramethylbenzene, Benzothiophene, 1-Methylnaphthalene.

The following analytes are included in our Massachusetts DEP Scope of Accreditation, Westborough Facility:

Drinking Water
EPA 200.8: Sb,As,Ba,Be,Cd,Cr,Cu,Pb,Ni,Se,Tl; **EPA 200.7**: Ba,Be,Ca,Cd,Cr,Cu,Na; **EPA 245.1:** Mercury;
EPA 300.0: Nitrate-N, Fluoride, Sulfate; **EPA 353.2**: Nitrate-N, Nitrite-N; **SM4500NO3-F**: Nitrate-N, Nitrite-N; **SM4500F-C, SM4500CN-CE, EPA 180.1, SM2130B, SM4500Cl-D, SM2320B, SM2540C, SM4500H-B**
EPA 332: Perchlorate.
Microbiology: **SM9215B; SM9223-P/A, SM9223B-Colilert-QT, Enterolert-QT.**

Non-Potable Water
EPA 200.8: Al,Sb,As,Be,Cd,Cr,Cu,Pb,Mn,Ni,Se,Ag,Tl,Zn;
EPA 200.7: Al,Sb,As,Be,Cd,Ca,Cr,Co,Cu,Fe,Pb,Mg,Mn,Mo,Ni,K,Se,Ag,Na,Sr,Ti,Tl,V,Zn;
EPA 245.1, SM4500H,B, EPA 120.1, SM2510B, SM2540C, SM2340B, SM2320B, SM4500CL-E, SM4500F-BC, SM426C, SM4500NH3-BH, **EPA 350.1**: Ammonia-N, **LACHAT 10-107-06-1-B**: Ammonia-N, **SM4500NO3-F, EPA 353.2**: Nitrate-N**, SM4500NH3-BC-NES, EPA 351.1, SM4500P-E, SM4500P-B, E, SM5220D, EPA 410.4, SM5210B, SM5310C, SM4500CL-D, EPA 1664, SM14 510AC, EPA 420.1, SM4500-CN-CE, SM2540D.**
EPA 624: Volatile Halocarbons & Aromatics,
EPA 608: Chlordane, Toxaphene, Aldrin, alpha-BHC, beta-BHC, gamma-BHC, delta-BHC, Dieldrin, DDD, DDE, DDT, Endosulfan I, Endosulfan II, Endosulfan sulfate, Endrin, Endrin Aldehyde, Heptachlor, Heptachlor Epoxide, PCBs
EPA 625: SVOC (Acid/Base/Neutral Extractables), **EPA 600/4-81-045**: PCB-Oil.
Microbiology: **SM9223B-Colilert-QT; Enterolert-QT, SM9222D-MF**.

For a complete listing of analytes and methods, please contact your Alpha Project Manager.

ALPHA ANALYTICAL — World Class Chemistry

8 Walkup Drive, Westboro, MA 01581, Tel: 508-898-9220
320 Forbes Blvd, Mansfield, MA 02048, Tel: 508-822-9300

CHAIN OF CUSTODY

PAGE 1 OF 1

Date Rec'd in Lab: 3/19/14

ALPHA Job #: L1405667

Client Information

Client: TRC
Address: 650 SUFFOLK ST
LOWELL MA 01854
Phone: 978-970-5600
Email: ALEONARD / DSULLIVAN @TRCSOLUTIONS.COM

Additional Project Information:

Project Information

Project Name: NBHS IRA POTW O&M
Project Location: NBHS NEW BEDFORD MA
Project #: 115058
Project Manager: DAVID SULLIVAN
ALPHA Quote #:

Turn-Around Time

☑ Standard ☐ RUSH (only confirmed if pre-approved!)

Date Due: 3/28/14

Report Information - Data Deliverables

☑ ADEx ☑ EMAIL

Billing Information

☐ Same as Client info PO #: C115058

Regulatory Requirements & Project Information Requirements

~~☐ Yes~~ ☒ No MA MCP Analytical Methods ☐ Yes ☐ No CT RCP Analytical Methods
☐ Yes ☐ No Matrix Spike Required on this SDG? (Required for MCP Inorganics)
☐ Yes ☐ No GW1 Standards (Info Required for Metals & EPH with Targets)
☐ Yes ☐ No NPDES RGP
☐ Other State /Fed Program ______ Criteria ______

ANALYSIS: VOC: ☐ 8260 ☑ 624 ☐ 524.2; SVOC: ☐ ABN ☐ PAH; METALS: ☐ MCP 13 ☐ MCP 14 ☐ RCP 15; METALS: ☐ RCRA5 ☐ RCRA8 ☐ PP13; EPH: ☐ Ranges & Targets ☐ Ranges Only; VPH: ☐ Ranges & Targets ☐ Ranges Only; ☑ PCB ☐ PEST M608; TPH: ☐ Quant Only ☐ Fingerprint; OIL & GREASE 1664; B.O.D. & PH; T.S.S. BY M160.2

SAMPLE INFO — Filtration: ☐ Field ☐ Lab to do; Preservation: ☐ Lab to do

ALPHA Lab ID (Lab Use Only)	Sample ID	Collection Date	Collection Time	Sample Matrix	Sampler Initials	VOC	SVOC	METALS	METALS	EPH	VPH	PCB	TPH	OIL & GREASE 1664	B.O.D. & PH	T.S.S. BY M160.2				Sample Comments	TOTAL # BOTTLES
05667-01	EFFLUENT (GRAB)	3/17/14	12:30	E	JF									✓	✓						3
-02	EFFLUENT (COMP.)	3/17 - 3/18/14	9:00 - 9:00	E	JF							✓				✓					3
-03	EFFLUENT ROUNDS 1→4	3/17 - 3/18/14	(9:00 15:00 21:00 9:00)	E	JF	LAB COMP														PAIR OF VOAs EVERY 6 HRS.	8
	Container Type					V						A		A	A	A					
	Preservative					B						A		B	A	A					

Container Type	Preservative
P= Plastic	A= None
A= Amber glass	B= HCl
V= Vial	C= HNO_3
G= Glass	D= H_2SO_4
B= Bacteria cup	E= NaOH
C= Cube	F= MeOH
O= Other	G= $NaHSO_4$
E= Encore	H = $Na_2S_2O_3$
D= BOD Bottle	I= Ascorbic Acid
	J = NH_4Cl
	K= Zn Acetate
	O= Other

Relinquished By:	Date/Time	Received By:	Date/Time
Jason C. Fern	3/19	[signature]	3/19/14 1115
[signature]	3/19/14 1145	[signature]	3/19/14 1145

All samples submitted are subject to Alpha's Terms and Conditions. See reverse side.

FORM NO: 01-01 (rev. 12-Mar-2012)

CHAIN OF CUSTODY

PAGE 1 OF 1

ALPHA ANALYTICAL
World Class Chemistry
8 Walkup Drive
Westboro, MA 01581
Tel: 508-898-9220
320 Forbes Blvd
Mansfield, MA 02048
Tel: 508-822-9300

Date Rec'd in Lab: 3/19/14

ALPHA Job #: L1408667

Client Information

Client: TRC

Address: 650 SUFFOLK ST
LOWELL MA 01854

Phone: 978-970-5600

Email: ALEONARD DSULLIVAN@TRCSOLUTIONS.COM

Project Information

Project Name: NBHS IRA POTW OXM

Project Location: NBHS NEW BEDFORD MA

Project #: 115058

Project Manager: DAVID SULLIVAN

ALPHA Quote #:

Turn-Around Time

☑ Standard ☐ RUSH (only confirmed if pre-approved!)

Date Due: 3/28/14

Report Information - Data Deliverables

☑ ADEx ☑ EMAIL

Billing Information

☐ Same as Client info PO #: C115058

Regulatory Requirements & Project Information Requirements

☑ Yes ☐ No MA MCP Analytical Methods ☐ Yes ☐ No CT RCP Analytical Methods
☐ Yes ☐ No Matrix Spike Required on this SDG? (Required for MCP Inorganics)
☐ Yes ☐ No GW1 Standards (Info Required for Metals & EPH with Targets)
☐ Yes ☐ No NPDES RGP
☐ Other State /Fed Program _____ Criteria _____

Additional Project Information:

ANALYSIS: VOC: ☐ 8260 ☑ 624 ☐ 524.2; SVOC: ☐ ABN ☐ PAH; METALS: ☐ MCP 13 ☐ MCP 14 ☐ RCP 15; METALS: ☐ RCRA5 ☐ RCRA8 ☐ PP13; EPH: ☐ Ranges & Targets ☐ Ranges Only; VPH: ☐ Ranges & Targets ☐ Ranges Only; ☑ PCB ☐ PEST M 608; TPH: ☐ Quant Only ☐ Fingerprint; OIL & GREASE 1664; B.O.D. & PH; T.S.S. BY M160.2

SAMPLE INFO
Filtration
☐ Field
☐ Lab to do
Preservation
☐ Lab to do

ALPHA Lab ID (Lab Use Only)	Sample ID	Collection Date	Collection Time	Sample Matrix	Sampler Initials	VOC: 8260	VOC: 624	SVOC: ABN	SVOC: PAH	METALS: MCP 13	METALS: MCP 14	METALS: RCP 15	METALS: RCRA5	METALS: RCRA8	EPH: Ranges & Targets	EPH: Ranges Only	VPH: Ranges & Targets	VPH: Ranges Only	PCB	PEST M 608	TPH: Quant Only	TPH: Fingerprint	OIL & GREASE 1664	B.O.D. & PH	T.S.S. BY M160.2			Sample Comments	TOTAL # BOTTLES
0S6667-01	EFFLUENT (GRAB)	3/17/14	12:30	E	JF																✓	✓							3
02	EFFLUENT (COMP.)	3/17-3/18/14	9:00-9:00	E	JF												✓						✓						3
03	EFFLUENT ROUNDS 1→4	3/17-3/18/14	(9:00, 15:00, 21:00, 9:00)	E	JF	LAB COMP																						PAIR OF VOAS EVERY 6 HRS.	8

Container Type	V						A		A	A	A					
Preservative	B						A		B	A	A					

Container Type
P= Plastic
A= Amber glass
V= Vial
G= Glass
B= Bacteria cup
C= Cube
O= Other
E= Encore
D= BOD Bottle

Preservative
A= None
B= HCl
C= HNO_3
D= H_2SO_4
E= NaOH
F= MeOH
G= $NaHSO_4$
H = $Na_2S_2O_3$
I= Ascorbic Acid
J = NH_4Cl
K= Zn Acetate
O= Other

Relinquished By:	Date/Time	Received By:	Date/Time
Jason C. Fiore	3/19	[illegible]	3/19/14 1115
[illegible]	3/19/14 1141	[illegible]	3/19/14 1145

All samples submitted are subject to Alpha's Terms and Conditions. See reverse side.

FORM NO: 01-01 (rev. 12-Mar-2012)

VAPOR MITIGATION SYSTEM EMISSION ANALYTICAL DATA

Date Issued: November 25, 2013

Pace Analytical e-Report

***Issuance of this report is prior to full data package.**

Report prepared for:
TRC ENVIRONMENTAL
WANNALANCIT MILLS
650 SUFFOLK ST
LOWELL, MA 01854
CONTACT: DAVID SULLIVAN

Project ID: 115058 NBHS PCB SAMPLING
Sampling Date(s): November 15, 2013
Lab Report ID: 13110425
Client Service Contact: Kelly Miller (518) 346-4592 ext. 3844

Analysis Included:
PCB Analysis (TO-10A)

Test results meet all National Environmental Laboratory Accreditation Conference (NELAC) requirements unless noted in the case narrative. The results contained within the document relate only to the samples included in this report. Pace Analytical is responsible only for the certified testing and is not directly responsible for the integrity of the sample before laboratory receipt. This report shall not be reproduced, except in full, without the written consent of Pace Analytical Services, Inc.

Dan Pfalzer
Laboratory Director

Certifications: New York (EPA: NY00906, ELAP: 11078), New Jersey (NY026), Connecticut (PH-0337), Massachusetts (M-NY906), Virginia (1884)

Pace Analytical Services, Inc. | 2190 Technology Drive | Schenectady, NY 12308
Phone: 518.346.4592 | internet: www.pacelabs.com

This page intentionally left blank.

Table of Contents

Section 1: QUALIFIERS 4

Section 2: SAMPLE CHAIN OF CUSTODY 6

Section 3: SAMPLE RECEIPT 8

Section 4: GC - PCB 10

Section 5: Quality Control Samples (Lab) 13

QUALIFIERS

Qualifier Definitions

Organic Laboratory Qualifiers

B - Denotes analyte observed in associated method blank or extraction blank. Analyte concentration should be considered as estimated.

D - Surrogate recovery not evaluated against control limits due to sample dilution.

E - Denotes analyte concentration exceeded calibration range of instrument. Sample could not be re-analyzed at secondary dilution due to insufficient sample amount, quick turn-around request, sample matrix interference or hold time excursion. Concentration result should be considered as estimated.

J - Denotes an estimated concentration. The concentration result is greater than or equal to the Method Detection Limit (MDL) but less than the Practical Quantitation Limit (PQL).

P - Indicates relative percent difference (RPD) between primary and secondary gas chromatograph (GC) column analysis exceeds 40 % or indicates percent difference (PD) between primary and secondary gas chromatograph (GC) column analysis exceeds 25 %.

U - Denotes analyte not detected at concentration greater than the Practical Quantitation Limit (PQL). PQLs are adjusted for sample weight/volume and dilution factors.

Z - Chromatographic interference due to polychlorinated biphenyl (PCB) co-elution.

* - Value not within control limits.

Inorganic Laboratory Qualifiers

B - Denotes analyte observed in associated method blank or digestion blank. Analyte concentration should be considered as estimated.

E - Denotes analyte concentration exceeded calibration range of instrument. Sample could not be re-analyzed at secondary dilution due to insufficient sample amount, quick turn-around request, sample matrix interference or hold time excursion. Concentration result should be considered as estimated.

J - Denotes an estimated concentration. The concentration result is greater than or equal to the Method Detection Limit (MDL) but less than the Practical Quantitation Limit (PQL).

U - Denotes analyte not detected at concentration greater than the Practical Quantitation Limit (PQL). PQLs are adjusted for sample weight/volume and dilution factors.

* - Value not within control limits.

SAMPLE CHAIN OF CUSTODY

Pace Analytical®
www.pacelabs.com

CHAIN-OF-CUSTODY / Analytical Request Document

The Chain-of-Custody is a LEGAL DOCUMENT. All relevant fields must be complete

<13110425P1>

131104251

Page: of

1743289

Section A Required Client Information:

Company: TRC
Address: 650 Suffolk St
Lowell, MA
Email To: dsullivan@trcsolutions.com
Phone: 978-970-5600 Fax:
Requested Due Date/TAT: Standard

Section B Required Project Information:

Report To: David Sullivan
Copy To: Alfred Leonard
Purchase Order No.: C115058
Project Name: NBHS IRA
Project Number: 115058

Section C Invoice Information:

Attention:
Company Name:
Address:
Pace Quote Reference:
Pace Project Manager:
Pace Profile #:

REGULATORY AGENCY: ☐ NPDES ☐ GROUND WATER ☐ DRINKING WATER ☐ UST ☐ RCRA ☐ OTHER

Site Location STATE: MA

Section D Required Client Information

Matrix Codes (MATRIX / CODE): Drinking Water DW; Water WT; Waste Water WW; Product P; Soil/Solid SL; Oil OL; Wipe WP; Air AR; Tissue TS; Other OT

SAMPLE ID (A-Z, 0-9 / ,-) Sample IDs MUST BE UNIQUE

Requested Analysis Filtered (Y/N)

ITEM #	SAMPLE ID	MATRIX CODE (see valid codes to left)	SAMPLE TYPE (G=GRAB C=COMP)	COLLECTED Composite Start DATE	Composite Start TIME	Composite End/Grab DATE	Composite End/Grab TIME	SAMPLE TEMP AT COLLECTION	# OF CONTAINERS	Unpreserved	H_2SO_4	HNO_3	HCl	NaOH	$Na_2S_2O_3$	Methanol	Other	Analysis Test (Y/N)	PCB via Soxlet	Residual Chlorine (Y/N)	Pace Project No./ Lab I.D.
1	Vapor Inlet	AIR	C	11/15/13	0945	11/15/13	1345	90	1								X		X		AQ39349
2	Vapor Outlet	AIR	C	11/15/13	0948	11/15/13	1348	90	1								X		X		AQ39350
3																					
4																					
5																					
6																					
7																					
8																					
9																					
10																					
11																					
12																					

ADDITIONAL COMMENTS	RELINQUISHED BY / AFFILIATION	DATE	TIME	ACCEPTED BY / AFFILIATION	DATE	TIME	SAMPLE CONDITIONS			
5 L/min	Kevin Jordan TRC	11/15/13	15:15	FeDEx	11/15/13	15:15				11/16/13
	VIA FED-EX →			J. Butler (PACE)	11/16/13	09:58	0.2	Y	Y	Y

SAMPLER NAME AND SIGNATURE

PRINT Name of SAMPLER: Kevin Jordan

SIGNATURE of SAMPLER: [signature] DATE Signed (MM/DD/YY): 11/15/13

Temp in °C | Received on Ice (Y/N) | Custody Sealed Cooler (Y/N) | Samples Intact (Y/N)

ORIGINAL

SAMPLE RECEIPT

SAMPLE RECEIPT REPORT
13110425

Pace Analytical Services, Inc.
2190 Technology Drive
Schenectady, NY 12308
Phone: 518.346.4592
Fax: 518.381.6055

CLIENT: TRC ENVIRONMENTAL
PROJECT: 115058 NBHS PCB SAMPLING
LRF: 13110425
REPORT: CLP-LIKE FORMS
EDD: YES
LRF TAT: 1 WEEK

RECEIVED DATE: 11/16/2013 09:58
SHIPPED VIA: FEDEX
SHIPPING ID: 8042 2936 1610
NUMBER OF COOLERS: 1
CUSTODY SEAL INTACT: YES
COOLER STATUS: CHILLED
TEMPERATURE(S): [5] 0.2 °C

SAMPLE SEALS INTACT: NA
[1,2] SAMPLES PRESERVED PER METHOD GUIDANCE: YES
[3] SAMPLES REC'D IN HOLDTIME: YES
DISPOSAL: BY LAB (45 DAYS)
COC DISCREPANCY: NO

COMMENTS:

3

CLIENT ID (LAB ID)	TAT-DUE Date[4]	DATE-TIME SAMPLED	MATRIX	METHOD	TEST DESCRIPTION	QC REQUESTED
VAPOR INLET (AQ39349)	1 WEEK 11-25-13	11/15/2013 13:45	PF10	EPA TO-10A	PCB Analysis (TO-10A)	
VAPOR OUTLET (AQ39350)	1 WEEK 11-25-13	11/15/2013 13:48	PF10	EPA TO-10A	PCB Analysis (TO-10A)	

[1]The pH preservation check of Oil and Grease (Method 1664) is performed as soon as possible after sample receipt and may not be included in this report.
[2]The pH preservation check of aqueous volatile samples is not performed until after the analysis of the sample to maintain zero headspace and is not included in this report.
[3]Samples received for pH analysis are not marked as a hold time exceedance here. SW-846 methods suggests analysis to be done within 15 minutes of sample collection. Because of transportation time it is not possible for the laboratory to perform the test in that time. Sample Certificates of Analysis reports are noted as such.
[4]Samples arriving at the laboratory after 4:00 pm are assigned a due date as if they arrived the following business day unless other arrangements have been made.
[5]All samples which require thermal preservation shall be considered acceptable when received greater than 6 degrees Celsius if they are collected on the same day as received and there is evidence that the chilling process has begun, such as arrival on ice.Control limits are between 0-6 Degrees Celsius. Control limits do not apply for metals analysis.

Reporting Parameters and Lists

EPA TO-10A - PCB Analysis (TO-10A) - (ug/m3)

Aroclor 1016
Aroclor 1221
Aroclor 1232
Aroclor 1242
Aroclor 1248
Aroclor 1254
Aroclor 1260
Total PCB Amount > RL

This report may not be reproduced except in full, without the written approval of Pace Analytical Services, Inc.

2190 Technology Drive Schenectady, NY 12308 Phone 518.346.4592 Fax 518.381.6055

GC - PCB

4

Analytical Sample Results

Job Number: 13110425

Pace Analytical Services, Inc.
2190 Technology Drive
Schenectady, NY 12308
Phone: 518.346.4592
Fax: 518.381.6055

Client: TRC ENVIRONMENTAL
Project: 115058 NBHS PCB SAMPLING
Client Sample ID: VAPOR INLET
Lab Sample ID: 13110425-01 (AQ39349)

Collection Date: 11/15/2013 13:45
Sample Matrix: POLYURETHANE FOAM
Received Date: 11/16/2013 09:58
Percent Solid: N/A

	Batch ID	Method	Date	Analyst	Init Wt./Vol.	Final Vol.	Column
Analysis 1:	GC10B-917-7	EPA Method TO-10A/EPA 8082A	11/19/2013 08:54	MCA	NA	NA	Phenomenex, Zebron ZB-5, 20 m, 0.18 mm ID, 0.18 µm
Prep 1:	25032	EPA 3540C	11/18/2013 12:00	AMS	1.20m³	5.00 mL	NA

Analyte	CAS No.	Result (ug/m³)	PQL	Dilution Factor	Flags	File ID
Aroclor 1016	12674-11-2	ND	0.0833	1.00	U	GC10B-917-7
Aroclor 1221	11104-28-2	ND	0.0833	1.00	U	GC10B-917-7
Aroclor 1232	11141-16-5	ND	0.0833	1.00	U	GC10B-917-7
Aroclor 1242	53469-21-9	ND	0.0833	1.00	U	GC10B-917-7
Aroclor 1248	12672-29-6	**0.280**	0.0833	1.00	PE	GC10B-917-7
Aroclor 1254	11097-69-1	**0.206**	0.0833	1.00	AF	GC10B-917-7
Aroclor 1260	11096-82-5	ND	0.0833	1.00	U	GC10B-917-7
Total PCB Amount > RL	1336-36-3	**0.486**		1.00	J	GC10B-917-7

Surrogate	CAS No.	% Recovery	Limits (%)	Q[1]	File ID
Tetrachloro-meta-xylene	877-09-8	81.0	60.0-120		GC10F-938-7
Decachlorobiphenyl	2051-24-3	85.7	60.0-120		GC10F-938-7
Tetrachloro-meta-xylene	877-09-8	86.1	60.0-120		GC10B-917-7
Decachlorobiphenyl	2051-24-3	87.5	60.0-120		GC10B-917-7

[1]Qualifier column where '*' denotes value outside the control limits or 'D' denotes value was diluted out.

ND: Denotes analyte not detected at a concentration greater than the PQL.
PQL (Practical Quantitation Limit). Denotes lowest analyte concentration reportable for the sample.
Note: Concentration results based upon client supplied air volumes.
J - Denotes an estimated concentration. The concentration result is greater than or equal to the Method Detection Limit (MDL) but less than the PQL.
AF-Aroclor 1254 is being reported as the best Aroclor match. The sample exhibits an altered PCB pattern.
PE-Aroclor 1248 is being used to report an altered PCB pattern exhibited by the sample. Actual Aroclor 1248 is not present in the sample, but is reported to more accurately quantify PCB present in sample that has undergone environmental alteration.

This report may not be reproduced except in full, without the written approval of Pace Analytical Services, Inc.
2190 Technology Drive | Schenectady, NY 12308 | Phone 518.346.4592 | Fax 518.381.6055 | www.pacelabs.com

Analytical Sample Results

Job Number: 13110425

Pace Analytical Services, Inc.
2190 Technology Drive
Schenectady, NY 12308
Phone: 518.346.4592
Fax: 518.381.6055

Client: TRC ENVIRONMENTAL
Project: 115058 NBHS PCB SAMPLING
Client Sample ID: VAPOR OUTLET
Lab Sample ID: 13110425-02 (AQ39350)

Collection Date: 11/15/2013 13:48
Sample Matrix: POLYURETHANE FOAM
Received Date: 11/16/2013 09:58
Percent Solid: N/A

	Batch ID	Method	Date	Analyst	Init Wt./Vol.	Final Vol.	Column
Analysis 1:	GC10F-938-8	EPA Method TO-10A/EPA 8082A	11/19/2013 09:07	AMR	NA	NA	Phenomenex, Zebron ZB-1MS, 20 m, 0.18 mm ID, 0.18 µm
Prep 1:	25032	EPA 3540C	11/18/2013 12:00	AMS	1.20m³	5.00 mL	NA

Analyte	CAS No.	Result (ug/m³)	PQL	Dilution Factor	Flags	File ID
Aroclor 1016	12674-11-2	ND	0.0833	1.00	U	GC10F-938-8
Aroclor 1221	11104-28-2	ND	0.0833	1.00	U	GC10F-938-8
Aroclor 1232	11141-16-5	ND	0.0833	1.00	U	GC10F-938-8
Aroclor 1242	53469-21-9	ND	0.0833	1.00	U	GC10F-938-8
Aroclor 1248	12672-29-6	ND	0.0833	1.00	U	GC10F-938-8
Aroclor 1254	11097-69-1	ND	0.0833	1.00	U	GC10F-938-8
Aroclor 1260	11096-82-5	ND	0.0833	1.00	U	GC10F-938-8
Total PCB Amount > RL	1336-36-3	ND		1.00	U	GC10F-938-8

Surrogate	CAS No.	% Recovery	Limits (%)	Q[1]	File ID
Tetrachloro-meta-xylene	877-09-8	84.5	60.0-120		GC10F-938-8
Decachlorobiphenyl	2051-24-3	91.0	60.0-120		GC10F-938-8
Tetrachloro-meta-xylene	877-09-8	90.5	60.0-120		GC10B-917-8
Decachlorobiphenyl	2051-24-3	90.5	60.0-120		GC10B-917-8

[1]Qualifier column where '*' denotes value outside the control limits or 'D' denotes value was diluted out.

ND: Denotes analyte not detected at a concentration greater than the PQL.
PQL (Practical Quantitation Limit). Denotes lowest analyte concentration reportable for the sample.
Note: Concentration results based upon client supplied air volumes.

This report may not be reproduced except in full, without the written approval of Pace Analytical Services, Inc.
2190 Technology Drive | Schenectady, NY 12308 | Phone 518.346.4592 | Fax 518.381.6055 | www.pacelabs.com

Quality Control Samples (Lab)

Quality Control Results
Method Blank

Job Number: 13110425

Pace Analytical Services, Inc.
2190 Technology Drive
Schenectady, NY 12308
Phone: 518.346.4592
Fax: 518.381.6055

Client: TRC ENVIRONMENTAL
Project: 115058 NBHS PCB SAMPLING
Client Sample ID: Method Blank (AQ39349B)
Lab Sample ID: PBLK-50

Collection Date: N/A
Sample Matrix: POLYURETHANE FOAM
Received Date: N/A
Percent Solid: N/A

	Batch ID	Method	Date	Analyst	Init Wt./Vol.	Final Vol.	Column
Analysis 1:	GC10B-917-4	EPA Method TO-10A/EPA 8082A	11/19/2013 08:17	MCA	NA	NA	Phenomenex, Zebron ZB-5, 20 m, 0.18 mm ID, 0.18 µm
Prep 1:	25032	EPA 3540C	11/18/2013 12:00	AMS	0.00m³	5.00 mL	NA

Analyte	CAS No.	Result (ug)	PQL	Dilution Factor	Flags	File ID
Aroclor 1016	12674-11-2	ND	0.100	1.00	U	GC10B-917-4
Aroclor 1221	11104-28-2	ND	0.100	1.00	U	GC10B-917-4
Aroclor 1232	11141-16-5	ND	0.100	1.00	U	GC10B-917-4
Aroclor 1242	53469-21-9	ND	0.100	1.00	U	GC10B-917-4
Aroclor 1248	12672-29-6	ND	0.100	1.00	U	GC10B-917-4
Aroclor 1254	11097-69-1	ND	0.100	1.00	U	GC10B-917-4
Aroclor 1260	11096-82-5	ND	0.100	1.00	U	GC10B-917-4
Total PCB Amount > RL	1336-36-3	ND		1.00	U	GC10B-917-4

Surrogate	CAS No.	% Recovery	Limits (%)	Q[1]	File ID
Tetrachloro-meta-xylene	877-09-8	89.5	60.0-120		GC10B-917-4
Decachlorobiphenyl	2051-24-3	89.8	60.0-120		GC10B-917-4

[1]Qualifier column where '*' denotes value outside the control limits or 'D' denotes value was diluted out.

ND: Denotes analyte not detected at a concentration greater than the PQL.
PQL (Practical Quantitation Limit). Denotes lowest analyte concentration reportable for the sample.

5

This report may not be reproduced except in full, without the written approval of Pace Analytical Services, Inc.
2190 Technology Drive | Schenectady, NY 12308 | Phone 518.346.4592 | Fax 518.381.6055 | www.pacelabs.com

Quality Control Results
Method Blank

Job Number: 13110425

Pace Analytical Services, Inc.
2190 Technology Drive
Schenectady, NY 12308
Phone: 518.346.4592
Fax: 518.381.6055

Client: TRC ENVIRONMENTAL
Project: 115058 NBHS PCB SAMPLING
Client Sample ID: Method Blank (AQ39349B)
Lab Sample ID: PBLK-50

Collection Date: N/A
Sample Matrix: POLYURETHANE FOAM
Received Date: N/A
Percent Solid: N/A

	Batch ID	Method	Date	Analyst	Init Wt./Vol.	Final Vol.	Column
Analysis 1:	GC10F-938-4	EPA Method TO-10A/EPA 8082A	11/19/2013 08:16	MCA	NA	NA	Phenomenex, Zebron ZB-1MS, 20 m, 0.18 mm ID, 0.18 µm
Prep 1:	25032	EPA 3540C	11/18/2013 12:00	AMS	0.00m³	5.00 mL	NA

Analyte	CAS No.	Result (ug)	PQL	Dilution Factor	Flags	File ID
Aroclor 1016	12674-11-2	ND	0.100	1.00	U	GC10F-938-4
Aroclor 1221	11104-28-2	ND	0.100	1.00	U	GC10F-938-4
Aroclor 1232	11141-16-5	ND	0.100	1.00	U	GC10F-938-4
Aroclor 1242	53469-21-9	ND	0.100	1.00	U	GC10F-938-4
Aroclor 1248	12672-29-6	ND	0.100	1.00	U	GC10F-938-4
Aroclor 1254	11097-69-1	ND	0.100	1.00	U	GC10F-938-4
Aroclor 1260	11096-82-5	ND	0.100	1.00	U	GC10F-938-4
Total PCB Amount > RL	1336-36-3	ND		1.00	U	GC10F-938-4

Surrogate	CAS No.	% Recovery	Limits (%)	Q[1]	File ID
Tetrachloro-meta-xylene	877-09-8	81.6	60.0-120		GC10F-938-4
Decachlorobiphenyl	2051-24-3	90.1	60.0-120		GC10F-938-4

[1]Qualifier column where '*' denotes value outside the control limits or 'D' denotes value was diluted out.

ND: Denotes analyte not detected at a concentration greater than the PQL.
PQL (Practical Quantitation Limit). Denotes lowest analyte concentration reportable for the sample.

5

This report may not be reproduced except in full, without the written approval of Pace Analytical Services, Inc.
2190 Technology Drive | Schenectady, NY 12308 | Phone 518.346.4592 | Fax 518.381.6055 | www.pacelabs.com

Quality Control Results
Lab Control Sample (LCS)
Job Number: 13110425

Pace Analytical Services, Inc.
2190 Technology Drive
Schenectady, NY 12308
Phone: 518.346.4592
Fax: 518.381.6055

Client: TRC ENVIRONMENTAL
Project: 115058 NBHS PCB SAMPLING
Client Sample ID: Lab Control Sample (AQ39349L)
Lab Sample ID: LCS-50

Collection Date: N/A
Sample Matrix: POLYURETHANE FOAM
Received Date: N/A
Percent Solid: N/A

	Batch ID	Method	Date	Analyst	Init Wt./Vol.	Final Vol.	Column
Analysis 1:	GC10B-917-5	EPA Method TO-10A/EPA 8082A	11/19/2013 08:29	AMR	NA	NA	Phenomenex, Zebron ZB-5, 20 m, 0.18 mm ID, 0.18 µm
Prep 1:	25032	EPA 3540C	11/18/2013 12:00	AMS	0.00m³	5.00 mL	NA

Analyte Spiked	CAS No.	Added (ug)	LCS (ug)	LCS % Rec.	Q[1]	Limits (%)
Aroclor 1221	11104-28-2	1.00	0.871	87.1		70.0-130

[1]Qualifier column where '*' denotes value outside the control limits. Note: RPD criteria does not apply if either the sample and duplicate sample are not detected.

5

Surrogate	CAS No.	% Recovery	Limits (%)	Q[1]	File ID
Tetrachloro-meta-xylene	877-09-8	92.5	60.0-120		GC10B-917-5
Decachlorobiphenyl	2051-24-3	92.0	60.0-120		GC10B-917-5

[1]Qualifier column where '*' denotes value outside the control limits or 'D' denotes value was diluted out.

ND: Denotes analyte not detected at a concentration greater than the PQL.
PQL (Practical Quantitation Limit). Denotes lowest analyte concentration reportable for the sample.

This report may not be reproduced except in full, without the written approval of Pace Analytical Services, Inc.
2190 Technology Drive | Schenectady, NY 12308 | Phone 518.346.4592 | Fax 518.381.6055 | www.pacelabs.com

Quality Control Results
Lab Control Sample (LCS)
Job Number: 13110425

Pace Analytical Services, Inc.
2190 Technology Drive
Schenectady, NY 12308
Phone: 518.346.4592
Fax: 518.381.6055

Client: TRC ENVIRONMENTAL
Project: 115058 NBHS PCB SAMPLING
Client Sample ID: Lab Control Sample (AQ39349L)
Lab Sample ID: LCS-50

Collection Date: N/A
Sample Matrix: POLYURETHANE FOAM
Received Date: N/A
Percent Solid: N/A

	Batch ID	Method	Date	Analyst	Init Wt./Vol.	Final Vol.	Column
Analysis 1:	GC10F-938-5	EPA Method TO-10A/EPA 8082A	11/19/2013 08:29	AMR	NA	NA	Phenomenex, Zebron ZB-1MS, 20 m, 0.18 mm ID, 0.18 µm
Prep 1:	25032	EPA 3540C	11/18/2013 12:00	AMS	0.00m³	5.00 mL	NA

Analyte Spiked	CAS No.	Added (ug)	LCS (ug)	LCS % Rec.	Q[1]	Limits (%)
Aroclor 1221	11104-28-2	1.00	0.858	85.8		70.0-130

[1]Qualifier column where '*' denotes value outside the control limits. Note: RPD criteria does not apply if either the sample and duplicate sample are not detected.

Surrogate	CAS No.	% Recovery	Limits (%)	Q[1]	File ID
Tetrachloro-meta-xylene	877-09-8	83.8	60.0-120		GC10F-938-5
Decachlorobiphenyl	2051-24-3	89.4	60.0-120		GC10F-938-5

[1]Qualifier column where '*' denotes value outside the control limits or 'D' denotes value was diluted out.

ND: Denotes analyte not detected at a concentration greater than the PQL.
PQL (Practical Quantitation Limit). Denotes lowest analyte concentration reportable for the sample.

5

This report may not be reproduced except in full, without the written approval of Pace Analytical Services, Inc.
2190 Technology Drive | Schenectady, NY 12308 | Phone 518.346.4592 | Fax 518.381.6055 | www.pacelabs.com

Quality Control Results
Lab Control Sample - Duplicate (LCSD)
Job Number: 13110425

Pace Analytical Services, Inc.
2190 Technology Drive
Schenectady, NY 12308
Phone: 518.346.4592
Fax: 518.381.6055

Client: TRC ENVIRONMENTAL
Project: 115058 NBHS PCB SAMPLING
Client Sample ID: Lab Control Sample - Duplicate (AQ39349S)
Lab Sample ID: LCSD-50

Collection Date: N/A
Sample Matrix: POLYURETHANE FOAM
Received Date: N/A
Percent Solid: N/A

	Batch ID	Method	Date	Analyst	Init Wt./Vol.	Final Vol.	Column
Analysis 1:	GC10B-917-6	EPA Method TO-10A/EPA 8082A	11/19/2013 08:42	AMR	NA	NA	Phenomenex, Zebron ZB-5, 20 m, 0.18 mm ID, 0.18 µm
Prep 1:	25032	EPA 3540C	11/18/2013 12:00	AMS	0.00m³	5.00 mL	NA

Analyte Spiked	CAS No.	Added (ug)	LCSD (ug)	LCSD % Rec.	Q[1]	Limits (%)	Precision: LCS % Rec.	Precision: RPD	Precision: Q[1]	Precision: Limits (%)
Aroclor 1221	11104-28-2	1.00	0.864	86.4		70.0-130	87.1	0.807		20

[1]Qualifier column where '*' denotes value outside the control limits. Note: RPD criteria does not apply if either the sample and duplicate sample are not detected.

Surrogate	CAS No.	% Recovery	Limits (%)	Q[1]	File ID
Tetrachloro-meta-xylene	877-09-8	92.2	60.0-120		GC10B-917-6
Decachlorobiphenyl	2051-24-3	91.4	60.0-120		GC10B-917-6

[1]Qualifier column where '*' denotes value outside the control limits or 'D' denotes value was diluted out.

ND: Denotes analyte not detected at a concentration greater than the PQL.
PQL (Practical Quantitation Limit). Denotes lowest analyte concentration reportable for the sample.

5

This report may not be reproduced except in full, without the written approval of Pace Analytical Services, Inc.
2190 Technology Drive | Schenectady, NY 12308 | Phone 518.346.4592 | Fax 518.381.6055 | www.pacelabs.com

Quality Control Results
Lab Control Sample - Duplicate (LCSD)
Job Number: 13110425

Pace Analytical Services, Inc.
2190 Technology Drive
Schenectady, NY 12308
Phone: 518.346.4592
Fax: 518.381.6055

Client: TRC ENVIRONMENTAL
Project: 115058 NBHS PCB SAMPLING
Client Sample ID: Lab Control Sample - Duplicate (AQ39349S)
Lab Sample ID: LCSD-50

Collection Date: N/A
Sample Matrix: POLYURETHANE FOAM
Received Date: N/A
Percent Solid: N/A

	Batch ID	Method	Date	Analyst	Init Wt./Vol.	Final Vol.	Column
Analysis 1:	GC10F-938-6	EPA Method TO-10A/EPA 8082A	11/19/2013 08:42	AMR	NA	NA	Phenomenex, Zebron ZB-1MS, 20 m, 0.18 mm ID, 0.18 µm
Prep 1:	25032	EPA 3540C	11/18/2013 12:00	AMS	0.00m³	5.00 mL	NA

Analyte Spiked	CAS No.	Added (ug)	LCSD (ug)	LCSD % Rec.	Q[1]	Limits (%)	Precision: LCS % Rec.	Precision: RPD	Precision: Q[1]	Precision: Limits (%)
Aroclor 1221	11104-28-2	1.00	0.892	89.2		70.0-130	85.8	3.89		20

[1]Qualifier column where '*' denotes value outside the control limits. Note: RPD criteria does not apply if either the sample and duplicate sample are not detected.

Surrogate	CAS No.	% Recovery	Limits (%)	Q[1]	File ID
Tetrachloro-meta-xylene	877-09-8	83.1	60.0-120		GC10F-938-6
Decachlorobiphenyl	2051-24-3	91.4	60.0-120		GC10F-938-6

[1]Qualifier column where '*' denotes value outside the control limits or 'D' denotes value was diluted out.

ND: Denotes analyte not detected at a concentration greater than the PQL.
PQL (Practical Quantitation Limit). Denotes lowest analyte concentration reportable for the sample.

5

This report may not be reproduced except in full, without the written approval of Pace Analytical Services, Inc.
2190 Technology Drive | Schenectady, NY 12308 | Phone 518.346.4592 | Fax 518.381.6055 | www.pacelabs.com

ANALYTICAL REPORT

Lab Number:	L1323315
Client:	TRC Environmental Consultants Wannalancit Mills 650 Suffolk Street Lowell, MA 01854
ATTN:	David Sullivan
Phone:	(978) 656-3565
Project Name:	NBHS IRA PSWS
Project Number:	115058
Report Date:	11/22/13

The original project report/data package is held by Alpha Analytical. This report/data package is paginated and should be reproduced only in its entirety. Alpha Analytical holds no responsibility for results and/or data that are not consistent with the original.

Certifications & Approvals: NY (11627), CT (PH-0141), NH (2206), NJ NELAP (MA015), RI (LAO00299), PA (68-02089), LA NELAP (03090), FL (E87814), TX (T104704419), WA (C954), DOD (L2217.01), USDA (Permit #P330-11-00109), US Army Corps of Engineers.

320 Forbes Boulevard, Mansfield, MA 02048-1806
508-822-9300 (Fax) 508-822-3288 800-624-9220 - www.alphalab.com

Project Name: NBHS IRA PSWS
Project Number: 115058

Lab Number: L1323315
Report Date: 11/22/13

Alpha Sample ID	Client ID	Sample Location	Collection Date/Time
L1323315-01	VAPOR INLET	NEW BEDFORD, MA	11/15/13 09:14
L1323315-02	VAPOR OUTLET	NEW BEDFORD, MA	11/15/13 09:33

Project Name: NBHS IRA PSWS **Lab Number:** L1323315

Project Number: 115058 **Report Date:** 11/22/13

MADEP MCP Response Action Analytical Report Certification

This form provides certifications for all samples performed by MCP methods. Please refer to the Sample Results and Container Information sections of this report for specification of MCP methods used for each analysis. The following questions pertain only to MCP Analytical Methods.

An affirmative response to questions A through F is required for "Presumptive Certainty" status		
A	Were all samples received in a condition consistent with those described on the Chain-of-Custody, properly preserved (including temperature) in the field or laboratory, and prepared/analyzed within method holding times?	YES
B	Were the analytical method(s) and all associated QC requirements specified in the selected CAM protocol(s) followed?	YES
C	Were all required corrective actions and analytical response actions specified in the selected CAM protocol(s) implemented for all identified performance standard non-conformances?	YES
D	Does the laboratory report comply with all the reporting requirements specified in CAM VII A, "Quality Assurance and Quality Control Guidelines for the Acquisition and Reporting of Analytical Data?"	YES
E a.	VPH, EPH, and APH Methods only: Was each method conducted without significant modification(s)? (Refer to the individual method(s) for a list of significant modifications).	N/A
E b.	APH and TO-15 Methods only: Was the complete analyte list reported for each method?	YES
F	Were all applicable CAM protocol QC and performance standard non-conformances identified and evaluated in a laboratory narrative (including all "No" responses to Questions A through E)?	YES

A response to questions G, H and I is required for "Presumptive Certainty" status		
G	Were the reporting limits at or below all CAM reporting limits specified in the selected CAM protocol(s)?	NO
H	Were all QC performance standards specified in the CAM protocol(s) achieved?	YES
I	Were results reported for the complete analyte list specified in the selected CAM protocol(s)?	YES

For any questions answered "No", please refer to the case narrative section on the following page(s).

Please note that sample matrix information is located in the Sample Results section of this report.

Project Name: NBHS IRA PSWS **Lab Number:** L1323315
Project Number: 115058 **Report Date:** 11/22/13

Case Narrative

The samples were received in accordance with the Chain of Custody and no significant deviations were encountered during the preparation or analysis unless otherwise noted. Sample Receipt, Container Information, and the Chain of Custody are located at the back of the report.

Results contained within this report relate only to the samples submitted under this Alpha Lab Number and meet all of the requirements of NELAC, for all NELAC accredited parameters. The data presented in this report is organized by parameter (i.e. VOC, SVOC, etc.). Sample specific Quality Control data (i.e. Surrogate Spike Recovery) is reported at the end of the target analyte list for each individual sample, followed by the Laboratory Batch Quality Control at the end of each parameter. If a sample was re-analyzed or re-extracted due to a required quality control corrective action and if both sets of data are reported, the Laboratory ID of the re-analysis or re-extraction is designated with an "R" or "RE", respectively. When multiple Batch Quality Control elements are reported (e.g. more than one LCS), the associated samples for each element are noted in the grey shaded header line of each data table. Any Laboratory Batch, Sample Specific % recovery or RPD value that is outside the listed Acceptance Criteria is bolded in the report. Performance criteria for CAM and RCP methods allow for some LCS compound failures to occur and still be within method compliance. In these instances, the specific failures are not narrated but are noted in the associated QC table. This information is also incorporated in the Data Usability format for our Data Merger tool where it can be reviewed along with any associated usability implications. Soil/sediments, solids and tissues are reported on a dry weight basis unless otherwise noted. Definitions of all data qualifiers and acronyms used in this report are provided in the Glossary located at the back of the report.

In reference to questions H (CAM) or 4 (RCP) when "NO" is checked, the performance criteria for CAM and RCP methods allow for some quality control failures to occur and still be within method compliance. In these instances the specific failure is not narrated but noted in the associated QC table. The information is also incorporated in the Data Usability format of our Data Merger tool where it can be reviewed along with any associated usability implications.

Please see the associated ADEx data file for a comparison of laboratory reporting limits that were achieved with the regulatory Numerical Standards requested on the Chain of Custody.

HOLD POLICY
For samples submitted on hold, Alpha's policy is to hold samples (with the exception of Air canisters) free of charge for 21 calendar days from the date the project is completed. After 21 calendar days, we will dispose of all samples submitted including those put on hold unless you have contacted your Client Service Representative and made arrangements for Alpha to continue to hold the samples. Air canisters will be disposed after 3 business days from the date the project is completed.

Please contact Client Services at 800-624-9220 with any questions.

Project Name:	NBHS IRA PSWS	**Lab Number:**	L1323315
Project Number:	115058	**Report Date:**	11/22/13

Case Narrative (continued)

MCP Related Narratives

Canisters were released from the laboratory on November 14, 2013. The canister certification data is provided as an addendum.

MCP Volatile Organics in Air

In reference to question G:

One or more of the target analytes did not achieve the requested CAM reporting limits.

I, the undersigned, attest under the pains and penalties of perjury that, to the best of my knowledge and belief and based upon my personal inquiry of those responsible for providing the information contained in this analytical report, such information is accurate and complete. This certificate of analysis is not complete unless this page accompanies any and all pages of this report.

Authorized Signature: Christopher J. Anderson

Title: Technical Director/Representative Date: 11/22/13

AIR

Project Name: NBHS IRA PSWS
Project Number: 115058
Lab Number: L1323315
Report Date: 11/22/13

SAMPLE RESULTS

Lab ID: L1323315-01
Client ID: VAPOR INLET
Sample Location: NEW BEDFORD, MA
Matrix: Soil_Vapor
Anaytical Method: 101,TO-15
Analytical Date: 11/18/13 23:52
Analyst: MB

Date Collected: 11/15/13 09:14
Date Received: 11/15/13
Field Prep: Not Specified

Parameter	ppbV Results	ppbV RL	ppbV MDL	ug/m3 Results	ug/m3 RL	ug/m3 MDL	Qualifier	Dilution Factor
MCP Volatile Organics in Air - Mansfield Lab								
Vinyl chloride	0.641	0.200	--	1.64	0.511	--		1
Bromomethane	ND	0.200	--	ND	0.777	--		1
Acetone	3.15	1.00	--	7.48	2.38	--		1
1,1-Dichloroethene	ND	0.200	--	ND	0.793	--		1
Methylene chloride	ND	1.40	--	ND	4.86	--		1
trans-1,2-Dichloroethene	0.872	0.200	--	3.46	0.793	--		1
1,1-Dichloroethane	ND	0.200	--	ND	0.809	--		1
Methyl tert butyl ether	ND	0.200	--	ND	0.721	--		1
2-Butanone	0.289	0.200	--	0.852	0.590	--		1
cis-1,2-Dichloroethene	2.53	0.200	--	10.0	0.793	--		1
Chloroform	ND	0.200	--	ND	0.977	--		1
1,2-Dichloroethane	ND	0.200	--	ND	0.809	--		1
1,1,1-Trichloroethane	ND	0.200	--	ND	1.09	--		1
Benzene	ND	0.200	--	ND	0.639	--		1
Carbon tetrachloride	ND	0.200	--	ND	1.26	--		1
1,2-Dichloropropane	ND	0.200	--	ND	0.924	--		1
Bromodichloromethane	ND	0.200	--	ND	1.34	--		1
1,4-Dioxane	ND	0.200	--	ND	0.721	--		1
Trichloroethene	0.785	0.200	--	4.22	1.07	--		1
cis-1,3-Dichloropropene	ND	0.200	--	ND	0.908	--		1
4-Methyl-2-pentanone	ND	0.200	--	ND	0.820	--		1
trans-1,3-Dichloropropene	ND	0.200	--	ND	0.908	--		1
1,1,2-Trichloroethane	ND	0.200	--	ND	1.09	--		1
Toluene	0.657	0.200	--	2.48	0.754	--		1

Project Name: NBHS IRA PSWS
Project Number: 115058
Lab Number: L1323315
Report Date: 11/22/13

SAMPLE RESULTS

Lab ID: L1323315-01
Client ID: VAPOR INLET
Sample Location: NEW BEDFORD, MA
Date Collected: 11/15/13 09:14
Date Received: 11/15/13
Field Prep: Not Specified

Parameter	ppbV Results	ppbV RL	ppbV MDL	ug/m3 Results	ug/m3 RL	ug/m3 MDL	Qualifier	Dilution Factor
MCP Volatile Organics in Air - Mansfield Lab								
Dibromochloromethane	ND	0.200	--	ND	1.70	--		1
1,2-Dibromoethane	ND	0.200	--	ND	1.54	--		1
Tetrachloroethene	ND	0.200	--	ND	1.36	--		1
Chlorobenzene	ND	0.200	--	ND	0.921	--		1
Ethylbenzene	ND	0.200	--	ND	0.869	--		1
p/m-Xylene	0.584	0.400	--	2.54	1.74	--		1
Bromoform	ND	0.200	--	ND	2.07	--		1
Styrene	ND	0.200	--	ND	0.852	--		1
1,1,2,2-Tetrachloroethane	ND	0.200	--	ND	1.37	--		1
o-Xylene	0.261	0.200	--	1.13	0.869	--		1
1,3-Dichlorobenzene	ND	0.200	--	ND	1.20	--		1
1,4-Dichlorobenzene	ND	0.200	--	ND	1.20	--		1
1,2-Dichlorobenzene	ND	0.200	--	ND	1.20	--		1
1,2,4-Trichlorobenzene	ND	0.200	--	ND	1.48	--		1
Naphthalene	0.644	0.200	--	3.38	1.05	--		1
Hexachlorobutadiene	ND	0.200	--	ND	2.13	--		1

Internal Standard	% Recovery	Qualifier	Acceptance Criteria
1,4-Difluorobenzene	91		60-140
Bromochloromethane	111		60-140
chlorobenzene-d5	105		60-140

Project Name: NBHS IRA PSWS
Project Number: 115058
Lab Number: L1323315
Report Date: 11/22/13

SAMPLE RESULTS

Lab ID: L1323315-02
Client ID: VAPOR OUTLET
Sample Location: NEW BEDFORD, MA
Matrix: Soil_Vapor
Anaytical Method: 101,TO15-SIM
Analytical Date: 11/21/13 22:34
Analyst: RY

Date Collected: 11/15/13 09:33
Date Received: 11/15/13
Field Prep: Not Specified

Parameter	ppbV Results	ppbV RL	ppbV MDL	ug/m3 Results	ug/m3 RL	ug/m3 MDL	Qualifier	Dilution Factor
MCP Volatile Organics in Air by SIM - Mansfield Lab								
Vinyl chloride	2.40	0.020	--	6.13	0.051	--		1
Bromomethane	ND	0.020	--	ND	0.078	--		1
Acetone	1.94	1.00	--	4.61	2.38	--		1
1,1-Dichloroethene	0.029	0.020	--	0.115	0.079	--		1
Methylene chloride	ND	1.40	--	ND	4.86	--		1
trans-1,2-Dichloroethene	6.08	0.020	--	24.1	0.079	--		1
1,1-Dichloroethane	ND	0.020	--	ND	0.081	--		1
Methyl tert butyl ether	ND	0.020	--	ND	0.072	--		1
2-Butanone	ND	0.200	--	ND	0.590	--		1
cis-1,2-Dichloroethene	17.4	0.020	--	69.0	0.079	--		1
Chloroform	0.137	0.020	--	0.669	0.098	--		1
1,2-Dichloroethane	ND	0.020	--	ND	0.081	--		1
1,1,1-Trichloroethane	ND	0.020	--	ND	0.109	--		1
Benzene	0.184	0.100	--	0.588	0.319	--		1
Carbon tetrachloride	ND	0.020	--	ND	0.126	--		1
1,2-Dichloropropane	ND	0.020	--	ND	0.092	--		1
Bromodichloromethane	ND	0.020	--	ND	0.134	--		1
1,4-Dioxane	ND	0.100	--	ND	0.360	--		1
Trichloroethene	ND	0.020	--	ND	0.107	--		1
cis-1,3-Dichloropropene	ND	0.020	--	ND	0.091	--		1
4-Methyl-2-pentanone	0.251	0.200	--	1.03	0.820	--		1
trans-1,3-Dichloropropene	ND	0.020	--	ND	0.091	--		1
1,1,2-Trichloroethane	ND	0.020	--	ND	0.109	--		1
Toluene	0.538	0.050	--	2.03	0.188	--		1

Project Name: NBHS IRA PSWS
Project Number: 115058
Lab Number: L1323315
Report Date: 11/22/13

SAMPLE RESULTS

Lab ID: L1323315-02
Client ID: VAPOR OUTLET
Sample Location: NEW BEDFORD, MA
Date Collected: 11/15/13 09:33
Date Received: 11/15/13
Field Prep: Not Specified

Parameter	ppbV Results	ppbV RL	ppbV MDL	ug/m3 Results	ug/m3 RL	ug/m3 MDL	Qualifier	Dilution Factor
MCP Volatile Organics in Air by SIM - Mansfield Lab								
Dibromochloromethane	ND	0.020	--	ND	0.170	--		1
1,2-Dibromoethane	ND	0.020	--	ND	0.154	--		1
Tetrachloroethene	ND	0.020	--	ND	0.136	--		1
Chlorobenzene	ND	0.020	--	ND	0.092	--		1
Ethylbenzene	0.222	0.020	--	0.964	0.087	--		1
p/m-Xylene	0.772	0.040	--	3.35	0.174	--		1
Bromoform	ND	0.020	--	ND	0.207	--		1
Styrene	0.153	0.020	--	0.651	0.085	--		1
1,1,2,2-Tetrachloroethane	ND	0.020	--	ND	0.137	--		1
o-Xylene	0.323	0.020	--	1.40	0.087	--		1
1,3-Dichlorobenzene	0.024	0.020	--	0.144	0.120	--		1
1,4-Dichlorobenzene	ND	0.020	--	ND	0.120	--		1
1,2-Dichlorobenzene	ND	0.020	--	ND	0.120	--		1
1,2,4-Trichlorobenzene	ND	0.050	--	ND	0.371	--		1
Naphthalene	0.895	0.050	--	4.69	0.262	--		1
Hexachlorobutadiene	ND	0.050	--	ND	0.533	--		1

Internal Standard	% Recovery	Qualifier	Acceptance Criteria
1,4-difluorobenzene	85		60-140
bromochloromethane	79		60-140
chlorobenzene-d5	90		60-140

Project Name: NBHS IRA PSWS
Project Number: 115058
Lab Number: L1323315
Report Date: 11/22/13

Method Blank Analysis
Batch Quality Control

Analytical Method: 101,TO-15
Analytical Date: 11/18/13 14:06

Parameter	ppbV Results	ppbV RL	ppbV MDL	ug/m3 Results	ug/m3 RL	ug/m3 MDL	Qualifier	Dilution Factor
MCP Volatile Organics in Air - Mansfield Lab for sample(s): 01 Batch: WG652596-4								
Vinyl chloride	ND	0.200	--	ND	0.511	--		1
Bromomethane	ND	0.200	--	ND	0.777	--		1
Acetone	ND	1.00	--	ND	2.38	--		1
1,1-Dichloroethene	ND	0.200	--	ND	0.793	--		1
Methylene chloride	ND	1.40	--	ND	4.86	--		1
trans-1,2-Dichloroethene	ND	0.200	--	ND	0.793	--		1
1,1-Dichloroethane	ND	0.200	--	ND	0.809	--		1
Methyl tert butyl ether	ND	0.200	--	ND	0.721	--		1
2-Butanone	ND	0.200	--	ND	0.590	--		1
cis-1,2-Dichloroethene	ND	0.200	--	ND	0.793	--		1
Chloroform	ND	0.200	--	ND	0.977	--		1
1,2-Dichloroethane	ND	0.200	--	ND	0.809	--		1
1,1,1-Trichloroethane	ND	0.200	--	ND	1.09	--		1
Benzene	ND	0.200	--	ND	0.639	--		1
Carbon tetrachloride	ND	0.200	--	ND	1.26	--		1
1,2-Dichloropropane	ND	0.200	--	ND	0.924	--		1
Bromodichloromethane	ND	0.200	--	ND	1.34	--		1
1,4-Dioxane	ND	0.200	--	ND	0.721	--		1
Trichloroethene	ND	0.200	--	ND	1.07	--		1
cis-1,3-Dichloropropene	ND	0.200	--	ND	0.908	--		1
4-Methyl-2-pentanone	ND	0.200	--	ND	0.820	--		1
trans-1,3-Dichloropropene	ND	0.200	--	ND	0.908	--		1
1,1,2-Trichloroethane	ND	0.200	--	ND	1.09	--		1
Toluene	ND	0.200	--	ND	0.754	--		1
Dibromochloromethane	ND	0.200	--	ND	1.70	--		1

Project Name: NBHS IRA PSWS
Project Number: 115058
Lab Number: L1323315
Report Date: 11/22/13

Method Blank Analysis
Batch Quality Control

Analytical Method: 101,TO-15
Analytical Date: 11/18/13 14:06

Parameter	ppbV Results	ppbV RL	ppbV MDL	ug/m3 Results	ug/m3 RL	ug/m3 MDL	Qualifier	Dilution Factor
MCP Volatile Organics in Air - Mansfield Lab for sample(s): 01 Batch: WG652596-4								
1,2-Dibromoethane	ND	0.200	--	ND	1.54	--		1
Tetrachloroethene	ND	0.200	--	ND	1.36	--		1
Chlorobenzene	ND	0.200	--	ND	0.921	--		1
Ethylbenzene	ND	0.200	--	ND	0.869	--		1
p/m-Xylene	ND	0.400	--	ND	1.74	--		1
Bromoform	ND	0.200	--	ND	2.07	--		1
Styrene	ND	0.200	--	ND	0.852	--		1
1,1,2,2-Tetrachloroethane	ND	0.200	--	ND	1.37	--		1
o-Xylene	ND	0.200	--	ND	0.869	--		1
1,3-Dichlorobenzene	ND	0.200	--	ND	1.20	--		1
1,4-Dichlorobenzene	ND	0.200	--	ND	1.20	--		1
1,2-Dichlorobenzene	ND	0.200	--	ND	1.20	--		1
1,2,4-Trichlorobenzene	ND	0.200	--	ND	1.48	--		1
Naphthalene	ND	0.200	--	ND	1.05	--		1
Hexachlorobutadiene	ND	0.200	--	ND	2.13	--		1

Project Name: NBHS IRA PSWS
Project Number: 115058
Lab Number: L1323315
Report Date: 11/22/13

Method Blank Analysis
Batch Quality Control

Analytical Method: 101,TO15-SIM
Analytical Date: 11/21/13 14:16

Parameter	ppbV Results	ppbV RL	ppbV MDL	ug/m3 Results	ug/m3 RL	ug/m3 MDL	Qualifier	Dilution Factor
MCP Volatile Organics in Air by SIM - Mansfield Lab for sample(s): 02 Batch: WG653641-4								
Dichlorodifluoromethane	ND	0.050	--	ND	0.247	--		1
Chloromethane	ND	0.500	--	ND	1.03	--		1
Freon-114	ND	0.050	--	ND	0.349	--		1
Vinyl chloride	ND	0.020	--	ND	0.051	--		1
1,3-Butadiene	ND	0.020	--	ND	0.044	--		1
Bromomethane	ND	0.020	--	ND	0.078	--		1
Chloroethane	ND	0.020	--	ND	0.053	--		1
Acetone	ND	1.00	--	ND	2.38	--		1
Trichlorofluoromethane	ND	0.050	--	ND	0.281	--		1
Acrylonitrile	ND	0.500	--	ND	1.09	--		1
1,1-Dichloroethene	ND	0.020	--	ND	0.079	--		1
Methylene chloride	ND	1.40	--	ND	4.86	--		1
Freon-113	ND	0.050	--	ND	0.383	--		1
Halothane	ND	0.050	--	ND	0.404	--		1
trans-1,2-Dichloroethene	ND	0.020	--	ND	0.079	--		1
1,1-Dichloroethane	ND	0.020	--	ND	0.081	--		1
Methyl tert butyl ether	ND	0.020	--	ND	0.072	--		1
2-Butanone	ND	0.200	--	ND	0.590	--		1
cis-1,2-Dichloroethene	ND	0.020	--	ND	0.079	--		1
Chloroform	ND	0.020	--	ND	0.098	--		1
1,2-Dichloroethane	ND	0.020	--	ND	0.081	--		1
1,1,1-Trichloroethane	ND	0.020	--	ND	0.109	--		1
Benzene	ND	0.100	--	ND	0.319	--		1
Carbon tetrachloride	ND	0.020	--	ND	0.126	--		1
1,2-Dichloropropane	ND	0.020	--	ND	0.092	--		1

Project Name: NBHS IRA PSWS
Project Number: 115058
Lab Number: L1323315
Report Date: 11/22/13

Method Blank Analysis
Batch Quality Control

Analytical Method: 101,TO15-SIM
Analytical Date: 11/21/13 14:16

Parameter	ppbV Results	ppbV RL	ppbV MDL	ug/m3 Results	ug/m3 RL	ug/m3 MDL	Qualifier	Dilution Factor
MCP Volatile Organics in Air by SIM - Mansfield Lab for sample(s): 02 Batch: WG653641-4								
Bromodichloromethane	ND	0.020	--	ND	0.134	--		1
1,4-Dioxane	ND	0.100	--	ND	0.360	--		1
Trichloroethene	ND	0.020	--	ND	0.107	--		1
cis-1,3-Dichloropropene	ND	0.020	--	ND	0.091	--		1
4-Methyl-2-pentanone	ND	0.200	--	ND	0.820	--		1
trans-1,3-Dichloropropene	ND	0.020	--	ND	0.091	--		1
1,1,2-Trichloroethane	ND	0.020	--	ND	0.109	--		1
Toluene	ND	0.050	--	ND	0.188	--		1
Dibromochloromethane	ND	0.020	--	ND	0.170	--		1
1,2-Dibromoethane	ND	0.020	--	ND	0.154	--		1
Tetrachloroethene	ND	0.020	--	ND	0.136	--		1
1,1,1,2-Tetrachloroethane	ND	0.020	--	ND	0.137	--		1
Chlorobenzene	ND	0.020	--	ND	0.092	--		1
Ethylbenzene	ND	0.020	--	ND	0.087	--		1
p/m-Xylene	ND	0.040	--	ND	0.174	--		1
Bromoform	ND	0.020	--	ND	0.207	--		1
Styrene	ND	0.020	--	ND	0.085	--		1
1,1,2,2-Tetrachloroethane	ND	0.020	--	ND	0.137	--		1
o-Xylene	ND	0.020	--	ND	0.087	--		1
Isopropylbenzene	ND	0.500	--	ND	2.46	--		1
1,3,5-Trimethybenzene	ND	0.020	--	ND	0.098	--		1
1,2,4-Trimethylbenzene	ND	0.020	--	ND	0.098	--		1
1,3-Dichlorobenzene	ND	0.020	--	ND	0.120	--		1
1,4-Dichlorobenzene	ND	0.020	--	ND	0.120	--		1
sec-Butylbenzene	ND	0.500	--	ND	2.74	--		1

Project Name: NBHS IRA PSWS
Project Number: 115058
Lab Number: L1323315
Report Date: 11/22/13

Method Blank Analysis
Batch Quality Control

Analytical Method: 101,TO15-SIM
Analytical Date: 11/21/13 14:16

Parameter	ppbV Results	ppbV RL	ppbV MDL	ug/m3 Results	ug/m3 RL	ug/m3 MDL	Qualifier	Dilution Factor
MCP Volatile Organics in Air by SIM - Mansfield Lab for sample(s): 02 Batch: WG653641-4								
p-Isopropyltoluene	ND	0.500	--	ND	2.74	--		1
1,2-Dichlorobenzene	ND	0.020	--	ND	0.120	--		1
n-Butylbenzene	ND	0.500	--	ND	2.74	--		1
1,2,4-Trichlorobenzene	ND	0.050	--	ND	0.371	--		1
Naphthalene	ND	0.050	--	ND	0.262	--		1
1,2,3-Trichlorobenzene	ND	0.050	--	ND	0.371	--		1
Hexachlorobutadiene	ND	0.050	--	ND	0.533	--		1

Lab Control Sample Analysis
Batch Quality Control

Project Name: NBHS IRA PSWS
Project Number: 115058

Lab Number: L1323315
Report Date: 11/22/13

Parameter	LCS %Recovery	Qual	LCSD %Recovery	Qual	%Recovery Limits	RPD	Qual	RPD Limits
MCP Volatile Organics in Air - Mansfield Lab Associated sample(s): 01 Batch: WG652596-3								
Vinyl chloride	115		-		70-130	-		
Bromomethane	121		-		70-130	-		
Acetone	113		-		50-150	-		
1,1-Dichloroethene	111		-		70-130	-		
Methylene chloride	102		-		70-130	-		
trans-1,2-Dichloroethene	97		-		70-130	-		
1,1-Dichloroethane	112		-		70-130	-		
Methyl tert butyl ether	102		-		70-130	-		
2-Butanone	101		-		70-130	-		
cis-1,2-Dichloroethene	121		-		70-130	-		
Chloroform	117		-		70-130	-		
1,2-Dichloroethane	107		-		70-130	-		
1,1,1-Trichloroethane	87		-		70-130	-		
Benzene	97		-		70-130	-		
Carbon tetrachloride	91		-		70-130	-		
1,2-Dichloropropane	98		-		70-130	-		
Bromodichloromethane	89		-		70-130	-		
1,4-Dioxane	91		-		50-150	-		
Trichloroethene	103		-		70-130	-		
cis-1,3-Dichloropropene	104		-		70-130	-		
4-Methyl-2-pentanone	83		-		70-130	-		

Lab Control Sample Analysis
Batch Quality Control

Project Name: NBHS IRA PSWS
Project Number: 115058

Lab Number: L1323315
Report Date: 11/22/13

Parameter	LCS %Recovery	Qual	LCSD %Recovery	Qual	%Recovery Limits	RPD	Qual	RPD Limits
MCP Volatile Organics in Air - Mansfield Lab Associated sample(s): 01 Batch: WG652596-3								
trans-1,3-Dichloropropene	89		-		70-130	-		
1,1,2-Trichloroethane	102		-		70-130	-		
Toluene	110		-		70-130	-		
Dibromochloromethane	100		-		70-130	-		
1,2-Dibromoethane	120		-		70-130	-		
Tetrachloroethene	117		-		70-130	-		
Chlorobenzene	116		-		70-130	-		
Ethylbenzene	112		-		70-130	-		
p/m-Xylene	111		-		70-130	-		
Bromoform	102		-		70-130	-		
Styrene	116		-		70-130	-		
1,1,2,2-Tetrachloroethane	118		-		70-130	-		
o-Xylene	114		-		70-130	-		
1,3-Dichlorobenzene	126		-		70-130	-		
1,4-Dichlorobenzene	126		-		70-130	-		
1,2-Dichlorobenzene	126		-		70-130	-		
1,2,4-Trichlorobenzene	136		-		50-150	-		
Naphthalene	118		-		50-150	-		
Hexachlorobutadiene	126		-		50-150	-		

Lab Control Sample Analysis
Batch Quality Control

Project Name: NBHS IRA PSWS
Project Number: 115058

Lab Number: L1323315
Report Date: 11/22/13

Parameter	LCS %Recovery	Qual	LCSD %Recovery	Qual	%Recovery Limits	RPD	Qual	RPD Limits
MCP Volatile Organics in Air by SIM - Mansfield Lab Associated sample(s): 02 Batch: WG653641-3								
Dichlorodifluoromethane	104		-		70-130	-		
Chloromethane	101		-		70-130	-		
1,2-Dichloro-1,1,2,2-tetrafluoroethane	104		-		70-130	-		
Vinyl chloride	103		-		70-130	-		
1,3-Butadiene	102		-		70-130	-		
Bromomethane	102		-		70-130	-		
Chloroethane	103		-		70-130	-		
Acetone	110		-		50-150	-		
Trichlorofluoromethane	106		-		70-130	-		
1,1-Dichloroethene	106		-		70-130	-		
Methylene chloride	100		-		70-130	-		
1,1,2-Trichloro-1,2,2-Trifluoroethane	105		-		70-130	-		
Halothane	117		-		70-130	-		
trans-1,2-Dichloroethene	89		-		70-130	-		
1,1-Dichloroethane	102		-		70-130	-		
Methyl tert butyl ether	95		-		70-130	-		
2-Butanone	98		-		70-130	-		
cis-1,2-Dichloroethene	118		-		70-130	-		
Chloroform	108		-		70-130	-		
1,2-Dichloroethane	102		-		70-130	-		
1,1,1-Trichloroethane	117		-		70-130	-		

Lab Control Sample Analysis
Batch Quality Control

Project Name: NBHS IRA PSWS
Project Number: 115058

Lab Number: L1323315
Report Date: 11/22/13

Parameter	LCS %Recovery	Qual	LCSD %Recovery	Qual	%Recovery Limits	RPD	Qual	RPD Limits
MCP Volatile Organics in Air by SIM - Mansfield Lab Associated sample(s): 02 Batch: WG653641-3								
Benzene	105		-		70-130	-		
Carbon tetrachloride	119		-		70-130	-		
1,2-Dichloropropane	111		-		70-130	-		
Bromodichloromethane	109		-		70-130	-		
1,4-Dioxane	102		-		50-150	-		
Trichloroethene	110		-		70-130	-		
cis-1,3-Dichloropropene	122		-		70-130	-		
4-Methyl-2-pentanone	110		-		70-130	-		
trans-1,3-Dichloropropene	107		-		70-130	-		
1,1,2-Trichloroethane	114		-		70-130	-		
Toluene	110		-		70-130	-		
Dibromochloromethane	113		-		70-130	-		
1,2-Dibromoethane	116		-		70-130	-		
Tetrachloroethene	105		-		70-130	-		
Chlorobenzene	110		-		70-130	-		
Ethylbenzene	109		-		70-130	-		
p/m-Xylene	111		-		70-130	-		
Bromoform	102		-		70-130	-		
Styrene	108		-		70-130	-		
1,1,2,2-Tetrachloroethane	112		-		70-130	-		
o-Xylene	106		-		70-130	-		

Lab Control Sample Analysis
Batch Quality Control

Project Name: NBHS IRA PSWS
Project Number: 115058

Lab Number: L1323315
Report Date: 11/22/13

Parameter	LCS %Recovery	Qual	LCSD %Recovery	Qual	%Recovery Limits	RPD	Qual	RPD Limits
MCP Volatile Organics in Air by SIM - Mansfield Lab Associated sample(s): 02 Batch: WG653641-3								
1,3,5-Trimethylbenzene	106		-		70-130	-		
1,2,4-Trimethylbenzene	111		-		70-130	-		
1,3-Dichlorobenzene	108		-		70-130	-		
1,4-Dichlorobenzene	104		-		70-130	-		
1,2-Dichlorobenzene	115		-		70-130	-		
1,2,4-Trichlorobenzene	135		-		50-150	-		
Naphthalene	117		-		50-150	-		
1,2,3-Trichlorobenzene	122		-		70-130	-		
Hexachlorobutadiene	124		-		50-150	-		

Lab Duplicate Analysis
Batch Quality Control

Project Name: NBHS IRA PSWS
Project Number: 115058

Lab Number: L1323315
Report Date: 11/22/13

Parameter	Native Sample	Duplicate Sample	Units	RPD	Qual	RPD Limits
MCP Volatile Organics in Air - Mansfield Lab Associated sample(s): 01 QC Batch ID: WG652596-5 QC Sample: L1323328-01 Client ID: DUP Sample						
Vinyl chloride	ND	ND	ppbV	NC		25
Bromomethane	ND	ND	ppbV	NC		25
Acetone	24.2	23.8	ppbV	2		25
1,1-Dichloroethene	ND	ND	ppbV	NC		25
Methylene chloride	ND	ND	ppbV	NC		25
trans-1,2-Dichloroethene	ND	ND	ppbV	NC		25
1,1-Dichloroethane	ND	ND	ppbV	NC		25
Methyl tert butyl ether	ND	ND	ppbV	NC		25
2-Butanone	0.407	0.488	ppbV	18		25
cis-1,2-Dichloroethene	ND	ND	ppbV	NC		25
Chloroform	ND	ND	ppbV	NC		25
1,2-Dichloroethane	ND	ND	ppbV	NC		25
1,1,1-Trichloroethane	ND	ND	ppbV	NC		25
Benzene	0.423	0.512	ppbV	19		25
Carbon tetrachloride	ND	ND	ppbV	NC		25
1,2-Dichloropropane	ND	ND	ppbV	NC		25
Bromodichloromethane	ND	ND	ppbV	NC		25
1,4-Dioxane	ND	ND	ppbV	NC		25
Trichloroethene	ND	0.241	ppbV	NC		25

Lab Duplicate Analysis
Batch Quality Control

Project Name: NBHS IRA PSWS
Project Number: 115058

Lab Number: L1323315
Report Date: 11/22/13

Parameter	Native Sample	Duplicate Sample	Units	RPD	RPD Limits
MCP Volatile Organics in Air - Mansfield Lab Associated sample(s): 01 QC Batch ID: WG652596-5 QC Sample: L1323328-01 Client ID: DUP Sample					
cis-1,3-Dichloropropene	ND	ND	ppbV	NC	25
4-Methyl-2-pentanone	ND	ND	ppbV	NC	25
trans-1,3-Dichloropropene	ND	ND	ppbV	NC	25
1,1,2-Trichloroethane	ND	ND	ppbV	NC	25
Toluene	2.98	3.06	ppbV	3	25
Dibromochloromethane	ND	ND	ppbV	NC	25
1,2-Dibromoethane	ND	ND	ppbV	NC	25
Tetrachloroethene	ND	ND	ppbV	NC	25
Chlorobenzene	ND	ND	ppbV	NC	25
Ethylbenzene	0.389	0.414	ppbV	6	25
p/m-Xylene	1.29	1.37	ppbV	6	25
Bromoform	ND	ND	ppbV	NC	25
Styrene	ND	ND	ppbV	NC	25
1,1,2,2-Tetrachloroethane	ND	ND	ppbV	NC	25
o-Xylene	0.439	0.462	ppbV	5	25
1,3-Dichlorobenzene	ND	ND	ppbV	NC	25
1,4-Dichlorobenzene	ND	ND	ppbV	NC	25
1,2-Dichlorobenzene	ND	ND	ppbV	NC	25
1,2,4-Trichlorobenzene	ND	ND	ppbV	NC	25

Lab Duplicate Analysis
Batch Quality Control

Project Name: NBHS IRA PSWS
Project Number: 115058

Lab Number: L1323315
Report Date: 11/22/13

Parameter	Native Sample	Duplicate Sample	Units	RPD	RPD Limits
MCP Volatile Organics in Air - Mansfield Lab Associated sample(s): 01 QC Batch ID: WG652596-5 QC Sample: L1323328-01 Client ID: DUP Sample					
Naphthalene	ND	ND	ppbV	NC	25
Hexachlorobutadiene	ND	ND	ppbV	NC	25

Lab Duplicate Analysis
Batch Quality Control

Project Name: NBHS IRA PSWS
Project Number: 115058

Lab Number: L1323315
Report Date: 11/22/13

Parameter	Native Sample	Duplicate Sample	Units	RPD	RPD Limits
MCP Volatile Organics in Air by SIM - Mansfield Lab Associated sample(s): 02 QC Batch ID: WG653641-5 QC Sample: L1323315-02 Client ID: VAPOR OUTLET					
Vinyl chloride	2.40	2.59	ppbV	8	25
Bromomethane	ND	ND	ppbV	NC	25
Acetone	1.94	2.00	ppbV	3	25
1,1-Dichloroethene	0.029	0.029	ppbV	0	25
Methylene chloride	ND	ND	ppbV	NC	25
trans-1,2-Dichloroethene	6.08	6.25	ppbV	3	25
1,1-Dichloroethane	ND	ND	ppbV	NC	25
Methyl tert butyl ether	ND	ND	ppbV	NC	25
2-Butanone	ND	ND	ppbV	NC	25
cis-1,2-Dichloroethene	17.4	17.9	ppbV	3	25
Chloroform	0.137	0.142	ppbV	4	25
1,2-Dichloroethane	ND	ND	ppbV	NC	25
1,1,1-Trichloroethane	ND	ND	ppbV	NC	25
Benzene	0.184	0.194	ppbV	5	25
Carbon tetrachloride	ND	ND	ppbV	NC	25
1,2-Dichloropropane	ND	ND	ppbV	NC	25
Bromodichloromethane	ND	ND	ppbV	NC	25
1,4-Dioxane	ND	ND	ppbV	NC	25
Trichloroethene	ND	ND	ppbV	NC	25

Lab Duplicate Analysis
Batch Quality Control

Project Name: NBHS IRA PSWS
Project Number: 115058

Lab Number: L1323315
Report Date: 11/22/13

Parameter	Native Sample	Duplicate Sample	Units	RPD	RPD Limits
MCP Volatile Organics in Air by SIM - Mansfield Lab Associated sample(s): 02 QC Batch ID: WG653641-5 QC Sample: L1323315-02 Client ID: VAPOR OUTLET					
cis-1,3-Dichloropropene	ND	ND	ppbV	NC	25
4-Methyl-2-pentanone	0.251	0.265	ppbV	5	25
trans-1,3-Dichloropropene	ND	ND	ppbV	NC	25
1,1,2-Trichloroethane	ND	ND	ppbV	NC	25
Toluene	0.538	0.536	ppbV	0	25
Dibromochloromethane	ND	ND	ppbV	NC	25
1,2-Dibromoethane	ND	ND	ppbV	NC	25
Tetrachloroethene	ND	ND	ppbV	NC	25
Chlorobenzene	ND	ND	ppbV	NC	25
Ethylbenzene	0.222	0.230	ppbV	4	25
p/m-Xylene	0.772	0.786	ppbV	2	25
Bromoform	ND	ND	ppbV	NC	25
Styrene	0.153	0.155	ppbV	1	25
1,1,2,2-Tetrachloroethane	ND	ND	ppbV	NC	25
o-Xylene	0.323	0.329	ppbV	2	25
1,3-Dichlorobenzene	0.024	0.025	ppbV	4	25
1,4-Dichlorobenzene	ND	ND	ppbV	NC	25
1,2-Dichlorobenzene	ND	ND	ppbV	NC	25
1,2,4-Trichlorobenzene	ND	ND	ppbV	NC	25

Lab Duplicate Analysis
Batch Quality Control

Project Name: NBHS IRA PSWS
Project Number: 115058

Lab Number: L1323315
Report Date: 11/22/13

Parameter	Native Sample	Duplicate Sample	Units	RPD	RPD Limits
MCP Volatile Organics in Air by SIM - Mansfield Lab Associated sample(s): 02 QC Batch ID: WG653641-5 QC Sample: L1323315-02 Client ID: VAPOR OUTLET					
Naphthalene	0.895	0.902	ppbV	1	25
Hexachlorobutadiene	ND	ND	ppbV	NC	25

Project Name: NBHS IRA PSWS

Lab Number: L1323315

Project Number: 115058

Report Date: 11/22/13

Canister and Flow Controller Information

Samplenum	Client ID	Media ID	Media Type	Date Prepared	Bottle Order	Cleaning Batch ID	Can Leak Check	Initial Pressure (in. Hg)	Pressure on Receipt (in. Hg)	Flow Controler Leak Chk	Flow Out mL/min	Flow In mL/min	% RPD
L1323315-01	VAPOR INLET	0509	SV200	11/14/13	95490		-	-	-	Pass	228	228	0
L1323315-01	VAPOR INLET	538	2.7L Can	11/14/13	95490	L1322331-01	Pass	-29.6	-2.2	-	-	-	-
L1323315-02	VAPOR OUTLET	0537	SV200	11/14/13	95490		-	-	-	Pass	220	222	1
L1323315-02	VAPOR OUTLET	445	2.7L Can	11/14/13	95490	L1322331-01	Pass	-29.8	-2.3	-	-	-	-

Project Name: BATCH CANISTER CERTIFICATION
Project Number: CANISTER QC BAT
Lab Number: L1322331
Report Date: 11/22/13

Air Canister Certification Results

Lab ID: L1322331-01
Client ID: CAN 193 SHELF 4
Sample Location:
Matrix: Air
Anaytical Method: 48,TO-15
Analytical Date: 11/06/13 17:45
Analyst: RY

Date Collected: 11/04/13 15:13
Date Received: 11/05/13
Field Prep: Not Specified

Parameter	ppbV Results	ppbV RL	ppbV MDL	ug/m3 Results	ug/m3 RL	ug/m3 MDL	Qualifier	Dilution Factor
Volatile Organics in Air - Mansfield Lab								
Chlorodifluoromethane	ND	0.200	--	ND	0.707	--		1
Propylene	ND	0.500	--	ND	0.861	--		1
Propane	ND	0.500	--	ND	0.902	--		1
Dichlorodifluoromethane	ND	0.200	--	ND	0.989	--		1
Chloromethane	ND	0.200	--	ND	0.413	--		1
Freon-114	ND	0.200	--	ND	1.40	--		1
Methanol	ND	5.00	--	ND	6.55	--		1
Vinyl chloride	ND	0.200	--	ND	0.511	--		1
1,3-Butadiene	ND	0.200	--	ND	0.442	--		1
Butane	ND	0.200	--	ND	0.475	--		1
Bromomethane	ND	0.200	--	ND	0.777	--		1
Chloroethane	ND	0.200	--	ND	0.528	--		1
Ethanol	ND	2.50	--	ND	4.71	--		1
Dichlorofluoromethane	ND	0.200	--	ND	0.842	--		1
Vinyl bromide	ND	0.200	--	ND	0.874	--		1
Acrolein	ND	0.500	--	ND	1.15	--		1
Acetone	ND	1.00	--	ND	2.38	--		1
Acetonitrile	ND	0.200	--	ND	0.336	--		1
Trichlorofluoromethane	ND	0.200	--	ND	1.12	--		1
Isopropanol	ND	0.500	--	ND	1.23	--		1
Acrylonitrile	ND	0.200	--	ND	0.434	--		1
Pentane	ND	0.200	--	ND	0.590	--		1
Ethyl ether	ND	0.200	--	ND	0.606	--		1
1,1-Dichloroethene	ND	0.200	--	ND	0.793	--		1
Tertiary butyl Alcohol	ND	0.500	--	ND	1.52	--		1

Project Name: BATCH CANISTER CERTIFICATION **Lab Number:** L1322331

Project Number: CANISTER QC BAT **Report Date:** 11/22/13

Air Canister Certification Results

Lab ID: L1322331-01 Date Collected: 11/04/13 15:13

Client ID: CAN 193 SHELF 4 Date Received: 11/05/13

Sample Location: Field Prep: Not Specified

	ppbV			ug/m3				
Parameter	**Results**	**RL**	**MDL**	**Results**	**RL**	**MDL**	**Qualifier**	**Dilution Factor**
Volatile Organics in Air - Mansfield Lab								
Methylene chloride	ND	1.00	--	ND	3.47	--		1
3-Chloropropene	ND	0.200	--	ND	0.626	--		1
Carbon disulfide	ND	0.200	--	ND	0.623	--		1
Freon-113	ND	0.200	--	ND	1.53	--		1
trans-1,2-Dichloroethene	ND	0.200	--	ND	0.793	--		1
1,1-Dichloroethane	ND	0.200	--	ND	0.809	--		1
Methyl tert butyl ether	ND	0.200	--	ND	0.721	--		1
Vinyl acetate	ND	0.200	--	ND	0.704	--		1
2-Butanone	ND	0.200	--	ND	0.590	--		1
cis-1,2-Dichloroethene	ND	0.200	--	ND	0.793	--		1
Ethyl Acetate	ND	0.500	--	ND	1.80	--		1
Chloroform	ND	0.200	--	ND	0.977	--		1
Tetrahydrofuran	ND	0.200	--	ND	0.590	--		1
2,2-Dichloropropane	ND	0.200	--	ND	0.924	--		1
1,2-Dichloroethane	ND	0.200	--	ND	0.809	--		1
n-Hexane	ND	0.200	--	ND	0.705	--		1
Diisopropyl ether	ND	0.200	--	ND	0.836	--		1
tert-Butyl Ethyl Ether	ND	0.200	--	ND	0.836	--		1
1,1,1-Trichloroethane	ND	0.200	--	ND	1.09	--		1
1,1-Dichloropropene	ND	0.200	--	ND	0.908	--		1
Benzene	ND	0.200	--	ND	0.639	--		1
Carbon tetrachloride	ND	0.200	--	ND	1.26	--		1
Cyclohexane	ND	0.200	--	ND	0.688	--		1
tert-Amyl Methyl Ether	ND	0.200	--	ND	0.836	--		1
Dibromomethane	ND	0.200	--	ND	1.42	--		1
1,2-Dichloropropane	ND	0.200	--	ND	0.924	--		1
Bromodichloromethane	ND	0.200	--	ND	1.34	--		1
1,4-Dioxane	ND	0.200	--	ND	0.721	--		1

Project Name: BATCH CANISTER CERTIFICATION **Lab Number:** L1322331

Project Number: CANISTER QC BAT **Report Date:** 11/22/13

Air Canister Certification Results

Lab ID: L1322331-01 Date Collected: 11/04/13 15:13

Client ID: CAN 193 SHELF 4 Date Received: 11/05/13

Sample Location: Field Prep: Not Specified

Parameter	ppbV Results	ppbV RL	ppbV MDL	ug/m3 Results	ug/m3 RL	ug/m3 MDL	Qualifier	Dilution Factor
Volatile Organics in Air - Mansfield Lab								
Trichloroethene	ND	0.200	--	ND	1.07	--		1
2,2,4-Trimethylpentane	ND	0.200	--	ND	0.934	--		1
Methyl Methacrylate	ND	0.500	--	ND	2.05	--		1
Heptane	ND	0.200	--	ND	0.820	--		1
cis-1,3-Dichloropropene	ND	0.200	--	ND	0.908	--		1
4-Methyl-2-pentanone	ND	0.200	--	ND	0.820	--		1
trans-1,3-Dichloropropene	ND	0.200	--	ND	0.908	--		1
1,1,2-Trichloroethane	ND	0.200	--	ND	1.09	--		1
Toluene	ND	0.200	--	ND	0.754	--		1
1,3-Dichloropropane	ND	0.200	--	ND	0.924	--		1
2-Hexanone	ND	0.200	--	ND	0.820	--		1
Dibromochloromethane	ND	0.200	--	ND	1.70	--		1
1,2-Dibromoethane	ND	0.200	--	ND	1.54	--		1
Butyl acetate	ND	0.500	--	ND	2.38	--		1
Octane	ND	0.200	--	ND	0.934	--		1
Tetrachloroethene	ND	0.200	--	ND	1.36	--		1
1,1,1,2-Tetrachloroethane	ND	0.200	--	ND	1.37	--		1
Chlorobenzene	ND	0.200	--	ND	0.921	--		1
Ethylbenzene	ND	0.200	--	ND	0.869	--		1
p/m-Xylene	ND	0.400	--	ND	1.74	--		1
Bromoform	ND	0.200	--	ND	2.07	--		1
Styrene	ND	0.200	--	ND	0.852	--		1
1,1,2,2-Tetrachloroethane	ND	0.200	--	ND	1.37	--		1
o-Xylene	ND	0.200	--	ND	0.869	--		1
1,2,3-Trichloropropane	ND	0.200	--	ND	1.21	--		1
Nonane	ND	0.200	--	ND	1.05	--		1
Isopropylbenzene	ND	0.200	--	ND	0.983	--		1
Bromobenzene	ND	0.200	--	ND	0.793	--		1

Project Name: BATCH CANISTER CERTIFICATION **Lab Number:** L1322331

Project Number: CANISTER QC BAT **Report Date:** 11/22/13

Air Canister Certification Results

Lab ID: L1322331-01 Date Collected: 11/04/13 15:13

Client ID: CAN 193 SHELF 4 Date Received: 11/05/13

Sample Location: Field Prep: Not Specified

Parameter	ppbV Results	ppbV RL	ppbV MDL	ug/m3 Results	ug/m3 RL	ug/m3 MDL	Qualifier	Dilution Factor
Volatile Organics in Air - Mansfield Lab								
2-Chlorotoluene	ND	0.200	--	ND	1.04	--		1
n-Propylbenzene	ND	0.200	--	ND	0.983	--		1
4-Chlorotoluene	ND	0.200	--	ND	1.04	--		1
4-Ethyltoluene	ND	0.200	--	ND	0.983	--		1
1,3,5-Trimethylbenzene	ND	0.200	--	ND	0.983	--		1
tert-Butylbenzene	ND	0.200	--	ND	1.10	--		1
1,2,4-Trimethylbenzene	ND	0.200	--	ND	0.983	--		1
Decane	ND	0.200	--	ND	1.16	--		1
Benzyl chloride	ND	0.200	--	ND	1.04	--		1
1,3-Dichlorobenzene	ND	0.200	--	ND	1.20	--		1
1,4-Dichlorobenzene	ND	0.200	--	ND	1.20	--		1
sec-Butylbenzene	ND	0.200	--	ND	1.10	--		1
p-Isopropyltoluene	ND	0.200	--	ND	1.10	--		1
1,2-Dichlorobenzene	ND	0.200	--	ND	1.20	--		1
n-Butylbenzene	ND	0.200	--	ND	1.10	--		1
1,2-Dibromo-3-chloropropane	ND	0.200	--	ND	1.93	--		1
Undecane	ND	0.200	--	ND	1.28	--		1
Dodecane	ND	0.200	--	ND	1.39	--		1
1,2,4-Trichlorobenzene	ND	0.200	--	ND	1.48	--		1
Naphthalene	ND	0.200	--	ND	1.05	--		1
1,2,3-Trichlorobenzene	ND	0.200	--	ND	1.48	--		1
Hexachlorobutadiene	ND	0.200	--	ND	2.13	--		1

	Results	Qualifier	Units	RDL	Dilution Factor
Tentatively Identified Compounds					
No Tentatively Identified Compounds					

Project Name: BATCH CANISTER CERTIFICATION **Lab Number:** L1322331

Project Number: CANISTER QC BAT **Report Date:** 11/22/13

Air Canister Certification Results

Lab ID: L1322331-01 Date Collected: 11/04/13 15:13

Client ID: CAN 193 SHELF 4 Date Received: 11/05/13

Sample Location: Field Prep: Not Specified

Parameter	ppbV Results	ppbV RL	ppbV MDL	ug/m3 Results	ug/m3 RL	ug/m3 MDL	Qualifier	Dilution Factor
Volatile Organics in Air - Mansfield Lab								

Internal Standard	% Recovery	Qualifier	Acceptance Criteria
1,4-Difluorobenzene	90		60-140
Bromochloromethane	89		60-140
chlorobenzene-d5	89		60-140

Project Name: BATCH CANISTER CERTIFICATION **Lab Number:** L1322331

Project Number: CANISTER QC BAT **Report Date:** 11/22/13

Air Canister Certification Results

Lab ID:	L1322331-01	Date Collected:	11/04/13 15:13
Client ID:	CAN 193 SHELF 4	Date Received:	11/05/13
Sample Location:		Field Prep:	Not Specified
Matrix:	Air		
Anaytical Method:	48,TO-15-SIM		
Analytical Date:	11/06/13 17:45		
Analyst:	RY		

	ppbV			ug/m3				
Parameter	**Results**	**RL**	**MDL**	**Results**	**RL**	**MDL**	**Qualifier**	**Dilution Factor**
Volatile Organics in Air by SIM - Mansfield Lab								
Dichlorodifluoromethane	ND	0.050	--	ND	0.247	--		1
Chloromethane	ND	0.500	--	ND	1.03	--		1
Freon-114	ND	0.050	--	ND	0.349	--		1
Vinyl chloride	ND	0.020	--	ND	0.051	--		1
1,3-Butadiene	ND	0.020	--	ND	0.044	--		1
Bromomethane	ND	0.020	--	ND	0.078	--		1
Chloroethane	ND	0.020	--	ND	0.053	--		1
Acetone	ND	2.00	--	ND	4.75	--		1
Trichlorofluoromethane	ND	0.050	--	ND	0.281	--		1
Acrylonitrile	ND	0.500	--	ND	1.09	--		1
1,1-Dichloroethene	ND	0.020	--	ND	0.079	--		1
Methylene chloride	ND	1.00	--	ND	3.47	--		1
Freon-113	ND	0.050	--	ND	0.383	--		1
Halothane	ND	0.050	--	ND	0.404	--		1
trans-1,2-Dichloroethene	ND	0.020	--	ND	0.079	--		1
1,1-Dichloroethane	ND	0.020	--	ND	0.081	--		1
Methyl tert butyl ether	ND	0.020	--	ND	0.072	--		1
2-Butanone	ND	0.500	--	ND	1.47	--		1
cis-1,2-Dichloroethene	ND	0.020	--	ND	0.079	--		1
Chloroform	ND	0.020	--	ND	0.098	--		1
1,2-Dichloroethane	ND	0.020	--	ND	0.081	--		1
1,1,1-Trichloroethane	ND	0.020	--	ND	0.109	--		1
Benzene	ND	0.100	--	ND	0.319	--		1
Carbon tetrachloride	ND	0.020	--	ND	0.126	--		1
1,2-Dichloropropane	ND	0.020	--	ND	0.092	--		1

Project Name: BATCH CANISTER CERTIFICATION **Lab Number:** L1322331

Project Number: CANISTER QC BAT **Report Date:** 11/22/13

Air Canister Certification Results

Lab ID: L1322331-01 Date Collected: 11/04/13 15:13

Client ID: CAN 193 SHELF 4 Date Received: 11/05/13

Sample Location: Field Prep: Not Specified

Parameter	ppbV Results	ppbV RL	ppbV MDL	ug/m3 Results	ug/m3 RL	ug/m3 MDL	Qualifier	Dilution Factor
Volatile Organics in Air by SIM - Mansfield Lab								
Bromodichloromethane	ND	0.020	--	ND	0.134	--		1
1,4-Dioxane	ND	0.100	--	ND	0.360	--		1
Trichloroethene	ND	0.020	--	ND	0.107	--		1
cis-1,3-Dichloropropene	ND	0.020	--	ND	0.091	--		1
4-Methyl-2-pentanone	ND	0.500	--	ND	2.05	--		1
trans-1,3-Dichloropropene	ND	0.020	--	ND	0.091	--		1
1,1,2-Trichloroethane	ND	0.020	--	ND	0.109	--		1
Toluene	ND	0.050	--	ND	0.188	--		1
Dibromochloromethane	ND	0.020	--	ND	0.170	--		1
1,2-Dibromoethane	ND	0.020	--	ND	0.154	--		1
Tetrachloroethene	ND	0.020	--	ND	0.136	--		1
1,1,1,2-Tetrachloroethane	ND	0.020	--	ND	0.137	--		1
Chlorobenzene	ND	0.020	--	ND	0.092	--		1
Ethylbenzene	ND	0.020	--	ND	0.087	--		1
p/m-Xylene	ND	0.040	--	ND	0.174	--		1
Bromoform	ND	0.020	--	ND	0.207	--		1
Styrene	ND	0.020	--	ND	0.085	--		1
1,1,2,2-Tetrachloroethane	ND	0.020	--	ND	0.137	--		1
o-Xylene	ND	0.020	--	ND	0.087	--		1
Isopropylbenzene	ND	0.500	--	ND	2.46	--		1
4-Ethyltoluene	ND	0.020	--	ND	0.098	--		1
1,3,5-Trimethybenzene	ND	0.020	--	ND	0.098	--		1
1,2,4-Trimethylbenzene	ND	0.020	--	ND	0.098	--		1
1,3-Dichlorobenzene	ND	0.020	--	ND	0.120	--		1
1,4-Dichlorobenzene	ND	0.020	--	ND	0.120	--		1
sec-Butylbenzene	ND	0.500	--	ND	2.74	--		1
p-Isopropyltoluene	ND	0.500	--	ND	2.74	--		1
1,2-Dichlorobenzene	ND	0.020	--	ND	0.120	--		1

Project Name: BATCH CANISTER CERTIFICATION **Lab Number:** L1322331

Project Number: CANISTER QC BAT **Report Date:** 11/22/13

Air Canister Certification Results

Lab ID: L1322331-01 Date Collected: 11/04/13 15:13

Client ID: CAN 193 SHELF 4 Date Received: 11/05/13

Sample Location: Field Prep: Not Specified

Parameter	ppbV Results	ppbV RL	ppbV MDL	ug/m3 Results	ug/m3 RL	ug/m3 MDL	Qualifier	Dilution Factor
Volatile Organics in Air by SIM - Mansfield Lab								
n-Butylbenzene	ND	0.500	--	ND	2.74	--		1
1,2,4-Trichlorobenzene	ND	0.050	--	ND	0.371	--		1
Naphthalene	ND	0.050	--	ND	0.262	--		1
1,2,3-Trichlorobenzene	ND	0.050	--	ND	0.371	--		1
Hexachlorobutadiene	ND	0.050	--	ND	0.533	--		1

Internal Standard	% Recovery	Qualifier	Acceptance Criteria
1,4-difluorobenzene	92		60-140
bromochloromethane	92		60-140
chlorobenzene-d5	92		60-140

Project Name: NBHS IRA PSWS
Project Number: 115058

Lab Number: L1323315
Report Date: 11/22/13

Sample Receipt and Container Information

Were project specific reporting limits specified? YES

Reagent H2O Preserved Vials Frozen on: NA

Cooler Information **Custody Seal**

Cooler	
N/A	Absent

Container Information

Container ID	Container Type	Cooler	pH	Temp deg C	Pres	Seal	Analysis(*)
L1323315-01A	Canister - 2.7 Liter	N/A	N/A		Y	Absent	MCP-TO15(30)
L1323315-02A	Canister - 2.7 Liter	N/A	N/A		Y	Absent	MCP-TO15-SIM(30)

*Values in parentheses indicate holding time in days

Project Name:	NBHS IRA PSWS	**Lab Number:**	L1323315
Project Number:	115058	**Report Date:**	11/22/13

GLOSSARY

Acronyms

EDL	- Estimated Detection Limit: This value represents the level to which target analyte concentrations are reported as estimated values, when those target analyte concentrations are quantified below the reporting limit (RL). The EDL includes any adjustments from dilutions, concentrations or moisture content, where applicable. The use of EDLs is specific to the analysis of PAHs using Solid-Phase Microextraction (SPME).
EPA	- Environmental Protection Agency.
LCS	- Laboratory Control Sample: A sample matrix, free from the analytes of interest, spiked with verified known amounts of analytes or a material containing known and verified amounts of analytes.
LCSD	- Laboratory Control Sample Duplicate: Refer to LCS.
LFB	- Laboratory Fortified Blank: A sample matrix, free from the analytes of interest, spiked with verified known amounts of analytes or a material containing known and verified amounts of analytes.
MDL	- Method Detection Limit: This value represents the level to which target analyte concentrations are reported as estimated values, when those target analyte concentrations are quantified below the reporting limit (RL). The MDL includes any adjustments from dilutions, concentrations or moisture content, where applicable.
MS	- Matrix Spike Sample: A sample prepared by adding a known mass of target analyte to a specified amount of matrix sample for which an independent estimate of target analyte concentration is available.
MSD	- Matrix Spike Sample Duplicate: Refer to MS.
NA	- Not Applicable.
NC	- Not Calculated: Term is utilized when one or more of the results utilized in the calculation are non-detect at the parameter's reporting unit.
NI	- Not Ignitable.
RL	- Reporting Limit: The value at which an instrument can accurately measure an analyte at a specific concentration. The RL includes any adjustments from dilutions, concentrations or moisture content, where applicable.
RPD	- Relative Percent Difference: The results from matrix and/or matrix spike duplicates are primarily designed to assess the precision of analytical results in a given matrix and are expressed as relative percent difference (RPD). Values which are less than five times the reporting limit for any individual parameter are evaluated by utilizing the absolute difference between the values; although the RPD value will be provided in the report.
SRM	- Standard Reference Material: A reference sample of a known or certified value that is of the same or similar matrix as the associated field samples.

Footnotes

1	- The reference for this analyte should be considered modified since this analyte is absent from the target analyte list of the original method.

Terms

Analytical Method: Both the document from which the method originates and the analytical reference method. (Example: EPA 8260B is shown as 1,8260B.) The codes for the reference method documents are provided in the References section of the Addendum.

Data Qualifiers

A	- Spectra identified as "Aldol Condensation Product".
B	- The analyte was detected above the reporting limit in the associated method blank. Flag only applies to associated field samples that have detectable concentrations of the analyte at less than ten times (10x) the concentration found in the blank. For MCP-related projects, flag only applies to associated field samples that have detectable concentrations of the analyte at less than ten times (10x) the concentration found in the blank. For DOD-related projects, flag only applies to associated field samples that have detectable concentrations of the analyte at less than ten times (10x) the concentration found in the blank AND the analyte was detected above one-half the reporting limit (or above the reporting limit for common lab contaminants) in the associated method blank. For NJ-Air-related projects, flag only applies to associated field samples that have detectable concentrations of the analyte above the reporting limit.
C	- Co-elution: The target analyte co-elutes with a known lab standard (i.e. surrogate, internal standards, etc.) for co-extracted analyses.
D	- Concentration of analyte was quantified from diluted analysis. Flag only applies to field samples that have detectable concentrations of the analyte.
E	- Concentration of analyte exceeds the range of the calibration curve and/or linear range of the instrument.
G	- The concentration may be biased high due to matrix interferences (i.e, co-elution) with non-target compound(s). The result should be considered estimated.
H	- The analysis of pH was performed beyond the regulatory-required holding time of 15 minutes from the time of sample collection.
I	- The lower value for the two columns has been reported due to obvious interference.

Report Format: Data Usability Report

Project Name:	NBHS IRA PSWS	**Lab Number:**	L1323315
Project Number:	115058	**Report Date:**	11/22/13

Data Qualifiers

M - Reporting Limit (RL) exceeds the MCP CAM Reporting Limit for this analyte.

NJ - Presumptive evidence of compound. This represents an estimated concentration for Tentatively Identified Compounds (TICs), where the identification is based on a mass spectral library search.

P - The RPD between the results for the two columns exceeds the method-specified criteria.

Q - The quality control sample exceeds the associated acceptance criteria. For DOD-related projects, LCS and/or Continuing Calibration Standard exceedences are also qualified on all associated sample results. Note: This flag is not applicable for matrix spike recoveries when the sample concentration is greater than 4x the spike added or for batch duplicate RPD when the sample concentrations are less than 5x the RL. (Metals only.)

R - Analytical results are from sample re-analysis.

RE - Analytical results are from sample re-extraction.

S - Analytical results are from modified screening analysis.

Report Format: Data Usability Report

Project Name: NBHS IRA PSWS **Lab Number:** L1323315
Project Number: 115058 **Report Date:** 11/22/13

REFERENCES

101 Compendium of Methods for the Determination of Toxic Organic Compounds in Ambient Air (EPA/625/R-96/010b:January 1999) with QC Requirements & Performance Standards for the Analysis of TO-15 under the Massachusetts Contingency Plan, WSC-CAM-IXB, July 2010.

LIMITATION OF LIABILITIES

Alpha Analytical performs services with reasonable care and diligence normal to the analytical testing laboratory industry. In the event of an error, the sole and exclusive responsibility of Alpha Analytical shall be to re-perform the work at it's own expense. In no event shall Alpha Analytical be held liable for any incidental, consequential or special damages, including but not limited to, damages in any way connected with the use of, interpretation of, information or analysis provided by Alpha Analytical.

We strongly urge our clients to comply with EPA protocol regarding sample volume, preservation, cooling, containers, sampling procedures, holding time and splitting of samples in the field.

Certificate/Approval Program Summary

Last revised October 1, 2013 – Mansfield Facility

The following list includes only those analytes/methods for which certification/approval is currently held.
For a complete listing of analytes for the referenced methods, please contact your Alpha Customer Service Representative.

Connecticut Department of Public Health Certificate/Lab ID: PH-0141.

Wastewater/Non-Potable Water (Inorganic Parameters: pH, Turbidity, Conductivity, Alkalinity, Aluminum, Antimony, Arsenic, Barium, Beryllium, Boron, Cadmium, Calcium, Chromium, Cobalt, Copper, Iron, Lead, Magnesium, Manganese, Mercury, Molybdenum, Nickel, Potassium, Selenium, Silver, Sodium, Strontium, Thallium, Tin, Titanium, Vanadium, Zinc, Total Residue (Solids), Total Suspended Solids (non-filterable). Organic Parameters: PCBs, Organochlorine Pesticides, Technical Chlordane, Toxaphene, Acid Extractables, Benzidines, Phthalate Esters, Nitrosamines, Nitroaromatics & Isophorone, PAHs, Haloethers, Chlorinated Hydrocarbons, Volatile Organics.)

Solid Waste/Soil (Inorganic Parameters: pH, Aluminum, Antimony, Arsenic, Barium, Beryllium, Cadmium, Calcium, Chromium, Hexavalent Chromium, Cobalt, Copper, Iron, Lead, Magnesium, Manganese, Mercury, Molybdenum, Nickel, Potassium, Selenium, Silver, Sodium, Thallium, Titanium, Vanadium, Zinc, Total Organic Carbon, Corrosivity, TCLP 1311, SPLP 1312. Organic Parameters: PCBs, Organochlorine Pesticides, Technical Chlordane, Toxaphene, Volatile Organics, Acid Extractables, Benzidines, Phthalates, Nitrosamines, Nitroaromatics & Cyclic Ketones, PAHs, Haloethers, Chlorinated Hydrocarbons.)

Florida Department of Health Certificate/Lab ID: E87814. ***NELAP Accredited.***

Non-Potable Water (Inorganic Parameters: SM2320B, SM2540D, SM2540G.)

Solid & Chemical Materials (Inorganic Parameters: 6020, 7470, 7471, 9045. Organic Parameters: EPA 8260, 8270, 8082, 8081.)

Air & Emissions (EPA TO-15.)

Louisiana Department of Environmental Quality Certificate/Lab ID: 03090. ***NELAP Accredited.***

Non-Potable Water (Inorganic Parameters: EPA 180.1, 245.7, 1631E, 3020A, 6020A, 7470A, 9040, 9050A, SM2320B, 2540D, 2540G, 4500H-B, Organic Parameters: EPA 3510C, 3580A, 3630C, 3640A, 3660B, 3665A, 5030B, 8015D, 3570, 8081B, 8082A, 8260B, 8270C, 8270D.)

Solid & Chemical Materials (Inorganic Parameters: EPA 1311, 3050B, 3051A, 3060A, 6020A, 7196A, 7470A, 7471B, 7474, 9040B, 9045C, 9060. Organic Parameters: EPA 3540C, 3570, 3580A, 3630C, 3640A, 3660, 3665A, 5035, 8015D, 8081B, 8082A, 8260B, 8270C, 8270D.)

Biological Tissue (Inorganic Parameters: EPA 6020A. Organic Parameters: EPA 3570, 3510C, 3610B, 3630C, 3640A, 8270C, 8270D.)

Air & Emissions (EPA TO-15.)

New Hampshire Department of Environmental Services Certificate/Lab ID: 2206. ***NELAP Accredited.***

Non-Potable Water (Inorganic Parameters: EPA 180.1, 1631E, 6020A, 7470A, 9040B, 9050A, SM2540D, 2540G, 4500H+B, 2320B, 3020A, . Organic Parameters: EPA 3510C, 3630C, 3640A, 3660B, 8081B, 8082A, 8270C, 8270D, 8015D.)

Solid & Chemical Materials (Inorganic Parameters: SW-846 1311, 3050B, 3051A, 6020A, 7471B, 9040B, 9045C. Organic Parameters: SW-846 3540C, 3580A, 3630C, 3640A, 3660B, 3665A, 8270C, 8015D, 8082A, 8081B.)

New Jersey Department of Environmental Protection Certificate/Lab ID: MA015. ***NELAP Accredited.***

Non-Potable Water (Inorganic Parameters: SW-846 1312, 3020A, SM2320B, SM2540D, 2540G, 4500H-B, EPA 180.1, 1631E, SW-846 7470A, 9040C, 6020A, 9050A. Organic Parameters: SW-846 3510C, 3580A, 3630C, 3640A, 3660B, 3665A, 8015D, 8081B, 8082A, 8270C, 8270D)

Solid & Chemical Materials (Inorganic Parameters: SW-846 1311, 1312, 3050B, 3051A, 6020A, 7471B, 7474, 9040B, 9040C, 9045C, 9045D, 9060, 9060A. Organic Parameters: SW-846 3540C, 3570, 3580A, 3630C, 3640A, 3660B, 3665A, 8081B, 8082A, 8270C, 8270D, 8015D.)

Atmospheric Organic Parameters (EPA 3C, TO-15, TO-10A, TO-13A-SIM.)

Biological Tissue (Inorganic Parameters: SW-846 6020A. Organic Parameters: SW-846 8270C, 8270D, 3510C, 3570, 3610C, 3630C, 3640A)

New York Department of Health Certificate/Lab ID: 11627. ***NELAP Accredited.***

Non-Potable Water (Inorganic Parameters: SM2320B, SM2540D, 6020A, 1631E, 7470A, 9050A, EPA 180.1, 3020A. Organic Parameters: EPA 8270C, 8270D, 8081B, 8082A, 3510C.)

Solid & Hazardous Waste (Inorganic Parameters: EPA 6020A, 7471B, 7474, 9040C, 9045D, 9060A. Organic Parameters: EPA 8270C, 8270D, 8081B, 8082A, 1311, 3050B, 3580A, 3570, 3051A.)

Air & Emissions (EPA TO-15, TO-10A.)

Pennsylvania Certificate/Lab ID: 68-02089 ***NELAP Accredited***

Non-Potable Water (Inorganic Parameters: 1312, 1631E, 180.1, 3020A, 6020A, 7470A, 9040B, 9050A, 2320B, 2540D, 2540G, SM4500H+-B. Organic Parameters: 3510C, 3580A, 3630C, 3640A, 3660B, 3665A, 8015D, 8081B, 8082A, 8270C, 8270D .)

Solid & Hazardous Waste (Inorganic Parameters: EPA 1311, 3051A, 6020A, 7471B, 7474 9040B, 9045C, 9060. Organic Parameters: EPA3050B, 3540C, 3570, 3580A, 3630C, 3640A, 3660B, 3665A, 8270C, 8270D, 8081B, 8015D, 8082A.)

Rhode Island Department of Health Certificate/Lab ID: LAO00299. ***NELAP Accredited via NJ-DEP.***

Refer to NJ-DEP Certificate for Non-Potable Water.

Texas Commission of Environmental Quality Certificate/Lab ID: T104704419-08-TX. ***NELAP Accredited.***

Solid & Chemical Materials (Inorganic Parameters: EPA 6020, 7470, 7471, 1311, 9040, 9045, 9060. Organic Parameters: EPA 8015, 8270, 8081, 8082.)

Air (Organic Parameters: EPA TO-15)

Virginia Division of Consolidated Laboratory Services Certificate/Lab ID:460194. ***NELAP Accredited.***

Non-Potable Water (Inorganic Parameters:EPA 3020A, 6020A, 245.7, 9040B. Organic Parameters: EPA 3510C, 3640A, 3660B, 3665A, 8270C, 8270D, 8082A, 8081B, 8015D.)

Solid & Chemical Materials (Inorganic Parameters: EPA 6020A,7470A,7471B,9040B,9045C,3050B,3051, 9060. Organic Parameters: EPA 3540C, 3580A, 3630C, 3640A, 3660B, 3665A, 3570, 8270C, 8270D, 8081B, 8082A, 8015D.)

Washington State Department of Ecology Certificate/Lab ID: C954. *Non-Potable Water* (Inorganic Parameters: SM2540D, 180.1, 1631E.)

Solid & Chemical Materials (Inorganic Parameters: EPA 6020, 7470, 7471, 7474, 9045C, 9050A, 9060. Organic Parameters: EPA 8081, 8082, 8015, 8270.)

U.S. Army Corps of Engineers

Department of Defense, L-A-B Certificate/Lab ID: L2217.01.

Non-Potable Water (Inorganic Parameters: EPA 6020A, SM4500H-B. Organic Parameters: 3020A, 3510C, 8270C, 8270D, 8270C-ALK-PAH, 8270D-ALK-PAH, 8082A, 8081B, 8015D-SHC, 8015D.)

Solid & Hazardous Waste (Inorganic Parameters: EPA 1311, 3050B, 6020A, 7471A, 9045C, 9060, SM 2540G, ASTM D422-63. Organic Parameters: EPA 3580A, 3570, 3540C, 8270C, 8270D, 8270C-ALK-PAH, 8270D-ALK-PAH 8082A, 8081B, 8015D-SHC, 8015D.

Air & Emissions (EPA TO-15.)

Analytes Not Accredited by NELAP

Certification is not available by NELAP for the following analytes: **8270C:** Biphenyl. **TO-15:** Halothane, 2,4,4-Trimethyl-2-pentene, 2,4,4-Trimethyl-1-pentene, Thiophene, 2-Methylthiophene, 3-Methylthiophene, 2-Ethylthiophene, 1,2,3-Trimethylbenzene, Indan, Indene, 1,2,4,5-Tetramethylbenzene, Benzothiophene, 2-Methylnaphthalene, 1-Methylnaphthalene.

AIR ANALYSIS

PAGE 1 OF 1

CHAIN OF CUSTODY

ALPHA ANALYTICAL
320 Forbes Blvd, Mansfield, MA 02048
TEL: 508-822-9300 FAX: 508-822-3288

Date Rec'd in Lab:

ALPHA Job #: L1323315

Client Information

Client: TRC
Address: 650 Suffolk St. Lowell, MA 01854
Phone: 978-970-5600
Fax:
Email: dsullivan@trcsolutions.com
☐ These samples have been previously analyzed by Alpha

Project Information

Project Name: NBHS IRA PSWS
Project Location: New Bedford, MA
Project #: 115058
Project Manager: David Sullivan
ALPHA Quote #:

Turn-Around Time

☐ Standard ☐ RUSH (only confirmed if pre-approved!)
Date Due: Time:

Report Information - Data Deliverables

☐ FAX
☐ ADEx
Criteria Checker:
(Default based on Regulatory Criteria Indicated)
Other Formats:
☑ EMAIL (standard pdf report)
☐ Additional Deliverables:
Report to: (if different than Project Manager)

Billing Information

☐ Same as Client info PO #: C115058

Regulatory Requirements/Report Limits

State/Fed	Program	Criteria
MA	MCP	

Other Project Specific Requirements/Comments:

All Columns Below Must Be Filled Out

ALPHA Lab ID (Lab Use Only)	Sample ID	Collection Date	Start Time	End Time	Initial Vacuum	Final Vacuum	Sample Matrix*	Sampler's Initials	Can Size	I D Can	I D - Flow Controller	TO-14A by TO-15	TO-15	TO-15 SIM	APH	FIXED GASES	TO-13A	TO-4 / TO-10	Sample Comments (i.e. PID)
23315-01	Vapor Inlet	11/15/13	0902	0914	-29.68	-2.00	SV	KDJ	2.7L	538	0509		X						
↓ 02	Vapor Outlet	11/15/13	0921	0933	-30.06	-2.01	SV	KDJ	2.7L	445	0537			X					

*SAMPLE MATRIX CODES
AA = Ambient Air (Indoor/Outdoor)
SV = Soil Vapor/Landfill Gas/SVE
Other = Please Specify

Container Type

Relinquished By:	Date/Time	Received By:	Date/Time:
[signature]	11/15/13 1525	[signature]	11/15/13 15:25

Please print clearly, legibly and completely. Samples can not be logged in and turnaround time clock will not start until any ambiguities are resolved. All samples submitted are subject to Alpha's Terms and Conditions. See reverse side.

Pace Analytical e-Report

***Issuance of this report is prior to full data package.**

Report prepared for:
TRC ENVIRONMENTAL
WANNALANCIT MILLS
650 SUFFOLK ST
LOWELL, MA 01854
CONTACT: DAVID SULLIVAN

Project ID: 115058 NBHS PCB SAMPLING
Sampling Date(s): December 17, 2013
Lab Report ID: 13120422
Client Service Contact: Kelly Miller (518) 346-4592 ext. 3844

Analysis Included:
PCB Analysis (TO-10A)

Test results meet all National Environmental Laboratory Accreditation Conference (NELAC) requirements unless noted in the case narrative. The results contained within the document relate only to the samples included in this report. Pace Analytical is responsible only for the certified testing and is not directly responsible for the integrity of the sample before laboratory receipt. This report shall not be reproduced, except in full, without the written consent of Pace Analytical Services, Inc.

Dan Pfalzer
Laboratory Director

Certifications: New York (EPA: NY00906, ELAP: 11078), New Jersey (NY026), Connecticut (PH-0337), Massachusetts (M-NY906), Virginia (1884)

Pace Analytical Services, Inc. | 2190 Technology Drive | Schenectady, NY 12308
Phone: 518.346.4592 | internet: www.pacelabs.com

This page intentionally left blank.

Table of Contents

Section 1: QUALIFIERS 4

Section 2: SAMPLE CHAIN OF CUSTODY 6

Section 3: SAMPLE RECEIPT 8

Section 4: GC - PCB 10

Section 5: Quality Control Samples (Lab) 13

QUALIFIERS

Qualifier Definitions

Organic Laboratory Qualifiers

B - Denotes analyte observed in associated method blank or extraction blank. Analyte concentration should be considered as estimated.

D - Surrogate recovery not evaluated against control limits due to sample dilution.

E - Denotes analyte concentration exceeded calibration range of instrument. Sample could not be re-analyzed at secondary dilution due to insufficient sample amount, quick turn-around request, sample matrix interference or hold time excursion. Concentration result should be considered as estimated.

J - Denotes an estimated concentration. The concentration result is greater than or equal to the Method Detection Limit (MDL) but less than the Practical Quantitation Limit (PQL).

P - Indicates relative percent difference (RPD) between primary and secondary gas chromatograph (GC) column analysis exceeds 40 % or indicates percent difference (PD) between primary and secondary gas chromatograph (GC) column analysis exceeds 25 %.

U - Denotes analyte not detected at concentration greater than the Practical Quantitation Limit (PQL). PQLs are adjusted for sample weight/volume and dilution factors.

Z - Chromatographic interference due to polychlorinated biphenyl (PCB) co-elution.

* - Value not within control limits.

Inorganic Laboratory Qualifiers

B - Denotes analyte observed in associated method blank or digestion blank. Analyte concentration should be considered as estimated.

E - Denotes analyte concentration exceeded calibration range of instrument. Sample could not be re-analyzed at secondary dilution due to insufficient sample amount, quick turn-around request, sample matrix interference or hold time excursion. Concentration result should be considered as estimated.

J - Denotes an estimated concentration. The concentration result is greater than or equal to the Method Detection Limit (MDL) but less than the Practical Quantitation Limit (PQL).

U - Denotes analyte not detected at concentration greater than the Practical Quantitation Limit (PQL). PQLs are adjusted for sample weight/volume and dilution factors.

* - Value not within control limits.

SAMPLE CHAIN OF CUSTODY

Pace Analytical®
www.pacelabs.com

<13120422P1>

131204221

CHAIN-OF-CUSTODY / Analytical Request Document

The Chain-of-Custody is a LEGAL DOCUMENT. All relevant fields must be completed accurately.

Page: of 1738750

Section A
Required Client Information:

Company: TRC	Report To: David Sullivan
Address: 650 Suffolk St. Lowell, MA 01854	Copy To: Alfred Leonard
Email To: ALEONARD@TRCSOLUTIONS.COM DSULLIVAN@TRCSOLUTIONS.COM	Purchase Order No.: C115058
Phone: 978-970-5600 Fax:	Project Name: NBHS IRA PSWS
Requested Due Date/TAT: Standard	Project Number: 115058

Section C
Invoice Information:

Attention:	
Company Name:	
Address:	
Pace Quote Reference:	
Pace Project Manager:	
Pace Profile #:	

REGULATORY AGENCY
☐ NPDES ☐ GROUND WATER ☐ DRINKING WATER
☐ UST ☐ RCRA ☐ OTHER _____

Site Location STATE: MA

Section D
Required Client Information

SAMPLE ID
(A-Z, 0-9 / ,-)
Sample IDs MUST BE UNIQUE

Matrix Codes
MATRIX / CODE

Drinking Water	DW
Water	WT
Waste Water	WW
Product	P
Soil/Solid	SL
Oil	OL
Wipe	WP
Air	AR
Tissue	TS
Other	OT

Requested Analysis Filtered (Y/N)

ITEM #	SAMPLE ID	MATRIX CODE (see valid codes to left)	SAMPLE TYPE (G=GRAB C=COMP)	COLLECTED COMPOSITE START DATE	COLLECTED COMPOSITE START TIME	COLLECTED COMPOSITE END/GRAB DATE	COLLECTED COMPOSITE END/GRAB TIME	SAMPLE TEMP AT COLLECTION	# OF CONTAINERS	Preservatives: Unpreserved	H_2SO_4	HNO_3	HCl	NaOH	$Na_2S_2O_3$	Methanol	Other ICE	Analysis Test (Y/N): PCB via Soxhlet	Residual Chlorine (Y/N)	Pace Project No./ Lab I.D.
1	VAPOR INLET	AR	C	12/17/13	1204	12/17/13	1804		1								X	X		AQ43403
2	VAPOR OUTLET	AR	C	12/17/13	1208	12/17/13	1808		1								X	X		AQ43404
3																				
4																				
5																				
6																				
7																				
8																				
9																				
10																				
11																				
12																				

ADDITIONAL COMMENTS	RELINQUISHED BY / AFFILIATION	DATE	TIME	ACCEPTED BY / AFFILIATION	DATE	TIME	SAMPLE CONDITIONS: Temp in °C	Received on Ice (Y/N)	Custody Sealed Cooler (Y/N)	Samples Intact (Y/N)
6 HR @ 5 L/min	Kevin Jordan / TRC	12/18/13	0910	FedEx	12/18/13	0910				LMS 12/23/13
	FedEx	12/23/13	1126	[illegible]	12/23/13	1126	12.9	Y	Y	Y

ORIGINAL

SAMPLER NAME AND SIGNATURE
PRINT Name of SAMPLER: Kevin Jordan
SIGNATURE of SAMPLER: Kevin Jordan
DATE Signed (MM/DD/YY): 12/18/13

*Important Note: By signing this form you are accepting Pace's NET 30 day payment terms and agreeing to late charges of 1.5% per month for any invoices not paid within 30 days.

F-ALL-Q-020rev.07, 15-May-2007

SAMPLE RECEIPT

SAMPLE RECEIPT REPORT
13120422

Pace Analytical Services, Inc.
2190 Technology Drive
Schenectady, NY 12308
Phone: 518.346.4592
Fax: 518.381.6055

CLIENT: TRC ENVIRONMENTAL
PROJECT: 115058 NBHS PCB SAMPLING
LRF: 13120422
REPORT: CLP-LIKE FORMS
EDD: YES
LRF TAT: 1 WEEK

RECEIVED DATE: 12/23/2013 11:26
SHIPPED VIA: FEDEX
SHIPPING ID: 804545686421
NUMBER OF COOLERS: 1
CUSTODY SEAL INTACT: YES
COOLER STATUS: CHILLED
TEMPERATURE(S): [5] 12.9 °C

SAMPLE SEALS INTACT: NA
[1,2] **SAMPLES PRESERVED PER METHOD GUIDANCE:** NO
[3] **SAMPLES REC'D IN HOLDTIME:** YES
DISPOSAL: BY LAB (45 DAYS)
COC DISCREPANCY: NO

COMMENTS:
NOT PROPERLY PRESERVED DUE TO TEMPERATURE BEING GREATER THAN 6C.

3

CLIENT ID (LAB ID)	TAT-DUE Date[4]	DATE-TIME SAMPLED	MATRIX	METHOD	TEST DESCRIPTION	QC REQUESTED
VAPOR INLET (AQ43403)	1 WEEK 12-31-13	12/17/2013 18:04	PF10	EPA TO-10A	PCB Analysis (TO-10A)	
VAPOR OUTLET (AQ43404)	1 WEEK 12-31-13	12/17/2013 18:08	PF10	EPA TO-10A	PCB Analysis (TO-10A)	

[1] The pH preservation check of Oil and Grease (Method 1664) is performed as soon as possible after sample receipt and may not be included in this report.
[2] The pH preservation check of aqueous volatile samples is not performed until after the analysis of the sample to maintain zero headspace and is not included in this report.
[3] Samples received for pH analysis are not marked as a hold time exceedance here. SW-846 methods suggests analysis to be done within 15 minutes of sample collection. Because of transportation time it is not possible for the laboratory to perform the test in that time. Sample Certificates of Analysis reports are noted as such.
[4] Samples arriving at the laboratory after 4:00 pm are assigned a due date as if they arrived the following business day unless other arrangements have been made.
[5] All samples which require thermal preservation shall be considered acceptable when received greater than 6 degrees Celsius if they are collected on the same day as received and there is evidence that the chilling process has begun, such as arrival on ice.Control limits are between 0-6 Degrees Celsius. Control limits do not apply for metals analysis.

Reporting Parameters and Lists

EPA TO-10A - PCB Analysis (TO-10A) - (ug/m3)

Aroclor 1016
Aroclor 1221
Aroclor 1232
Aroclor 1242
Aroclor 1248
Aroclor 1254
Aroclor 1260
Total PCB Amount > RL

This report may not be reproduced except in full, without the written approval of Pace Analytical Services, Inc.

2190 Technology Drive Schenectady, NY 12308 Phone 518.346.4592 Fax 518.381.6055

GC - PCB

4

Analytical Sample Results

Job Number: 13120422

Pace Analytical Services, Inc.
2190 Technology Drive
Schenectady, NY 12308
Phone: 518.346.4592
Fax: 518.381.6055

Client: TRC ENVIRONMENTAL
Project: 115058 NBHS PCB SAMPLING
Client Sample ID: VAPOR INLET
Lab Sample ID: 13120422-01 (AQ43403)

Collection Date: 12/17/2013 18:04
Sample Matrix: POLYURETHANE FOAM
Received Date: 12/23/2013 11:26
Percent Solid: N/A

	Batch ID	Method	Date	Analyst	Init Wt./Vol.	Final Vol.	Column
Analysis 1:	GC20B-1775-38	EPA Method TO-10A/EPA 8082A	12/24/2013 17:18	MCA	NA	NA	Phenomenex, Zebron ZB-5, 20 m, 0.18 mm ID, 0.18 µm
Prep 1:	25350	TO-10A	12/23/2013 14:00	LMB	1.80m³	5.00 mL	NA

Analyte	CAS No.	Result (ug/m³)	PQL	Dilution Factor	Flags	File ID
Aroclor 1016	12674-11-2	ND	0.0556	1.00	U	GC20B-1775-38
Aroclor 1221	11104-28-2	**0.0797**	0.0556	1.00	PB	GC20B-1775-38
Aroclor 1232	11141-16-5	ND	0.0556	1.00	U	GC20B-1775-38
Aroclor 1242	53469-21-9	ND	0.0556	1.00	U	GC20B-1775-38
Aroclor 1248	12672-29-6	**0.289**	0.0556	1.00	PE	GC20B-1775-38
Aroclor 1254	11097-69-1	**0.195**	0.0556	1.00	AF	GC20B-1775-38
Aroclor 1260	11096-82-5	ND	0.0556	1.00	U	GC20B-1775-38
Total PCB Amount > RL	1336-36-3	**0.5637**		1.00		GC20B-1775-38

Surrogate	CAS No.	% Recovery	Limits (%)	Q[1]	File ID
Tetrachloro-meta-xylene	877-09-8	95.4	60.0-120		GC20B-1775-38
Decachlorobiphenyl	2051-24-3	93.9	60.0-120		GC20B-1775-38
Tetrachloro-meta-xylene	877-09-8	97.9	60.0-120		GC20F-1778-38
Decachlorobiphenyl	2051-24-3	85.1	60.0-120		GC20F-1778-38

[1]Qualifier column where '*' denotes value outside the control limits or 'D' denotes value was diluted out.

ND: Denotes analyte not detected at a concentration greater than the PQL.
PQL (Practical Quantitation Limit). Denotes lowest analyte concentration reportable for the sample.
Note: Concentration results based upon client supplied air volumes.
AF-Aroclor 1254 is being reported as the best Aroclor match. The sample exhibits an altered PCB pattern.
PB-Aroclor 1221 is being used to report an altered PCB pattern exhibited by the sample. Actual Aroclor 1221 is not present in the sample, but is reported to more accurately quantify PCB present in sample that has undergone environmental alteration.
PE-Aroclor 1248 is being used to report an altered PCB pattern exhibited by the sample. Actual Aroclor 1248 is not present in the sample, but is reported to more accurately quantify PCB present in sample that has undergone environmental alteration.

This report may not be reproduced except in full, without the written approval of Pace Analytical Services, Inc.
2190 Technology Drive | Schenectady, NY 12308 | Phone 518.346.4592 | Fax 518.381.6055 | www.pacelabs.com

Analytical Sample Results

Job Number: 13120422

Pace Analytical Services, Inc.
2190 Technology Drive
Schenectady, NY 12308
Phone: 518.346.4592
Fax: 518.381.6055

Client: TRC ENVIRONMENTAL
Project: 115058 NBHS PCB SAMPLING
Client Sample ID: VAPOR OUTLET
Lab Sample ID: 13120422-02 (AQ43404)

Collection Date: 12/17/2013 18:08
Sample Matrix: POLYURETHANE FOAM
Received Date: 12/23/2013 11:26
Percent Solid: N/A

	Batch ID	Method	Date	Analyst	Init Wt./Vol.	Final Vol.	Column
Analysis 1:	GC20F-1778-39	EPA Method TO-10A/EPA 8082A	12/24/2013 17:30	MCA	NA	NA	Phenomenex, Zebron ZB-1MS, 20 m, 0.18 mm ID, 0.18 µm
Prep 1:	25350	TO-10A	12/23/2013 14:00	LMB	1.80m³	5.00 mL	NA

Analyte	CAS No.	Result (ug/m³)	PQL	Dilution Factor	Flags	File ID
Aroclor 1016	12674-11-2	ND	0.0556	1.00	U	GC20F-1778-39
Aroclor 1221	11104-28-2	ND	0.0556	1.00	U	GC20F-1778-39
Aroclor 1232	11141-16-5	ND	0.0556	1.00	U	GC20F-1778-39
Aroclor 1242	53469-21-9	ND	0.0556	1.00	U	GC20F-1778-39
Aroclor 1248	12672-29-6	ND	0.0556	1.00	U	GC20F-1778-39
Aroclor 1254	11097-69-1	ND	0.0556	1.00	U	GC20F-1778-39
Aroclor 1260	11096-82-5	ND	0.0556	1.00	U	GC20F-1778-39
Total PCB Amount > RL	1336-36-3	ND		1.00	U	GC20F-1778-39

Surrogate	CAS No.	% Recovery	Limits (%)	Q[1]	File ID
Tetrachloro-meta-xylene	877-09-8	93.6	60.0-120		GC20B-1775-39
Decachlorobiphenyl	2051-24-3	90.2	60.0-120		GC20B-1775-39
Tetrachloro-meta-xylene	877-09-8	97.7	60.0-120		GC20F-1778-39
Decachlorobiphenyl	2051-24-3	83.6	60.0-120		GC20F-1778-39

[1]Qualifier column where '*' denotes value outside the control limits or 'D' denotes value was diluted out.

ND: Denotes analyte not detected at a concentration greater than the PQL.
PQL (Practical Quantitation Limit). Denotes lowest analyte concentration reportable for the sample.
Note: Concentration results based upon client supplied air volumes.

This report may not be reproduced except in full, without the written approval of Pace Analytical Services, Inc.
2190 Technology Drive | Schenectady, NY 12308 | Phone 518.346.4592 | Fax 518.381.6055 | www.pacelabs.com

Quality Control Samples (Lab)

5

Quality Control Results
Method Blank

Job Number: 13120422

Pace Analytical Services, Inc.
2190 Technology Drive
Schenectady, NY 12308
Phone: 518.346.4592
Fax: 518.381.6055

Client: TRC ENVIRONMENTAL
Project: 115058 NBHS PCB SAMPLING
Client Sample ID: Method Blank (AQ43403BRR1)
Lab Sample ID: PBLK-75

Collection Date: N/A
Sample Matrix: POLYURETHANE FOAM
Received Date: N/A
Percent Solid: N/A

	Batch ID	Method	Date	Analyst	Init Wt./Vol.	Final Vol.	Column
Analysis 1:	GC20B-1775-35	EPA Method TO-10A/EPA 8082A	12/24/2013 16:40	MCA	NA	NA	Phenomenex, Zebron ZB-5, 20 m, 0.18 mm ID, 0.18 µm
Prep 1:	25350	TO-10A	12/23/2013 14:00	LMB	0.00m³	5.00 mL	NA

Analyte	CAS No.	Result (ug)	PQL	Dilution Factor	Flags	File ID
Aroclor 1016	12674-11-2	ND	0.100	1.00	U	GC20B-1775-35
Aroclor 1221	11104-28-2	ND	0.100	1.00	U	GC20B-1775-35
Aroclor 1232	11141-16-5	ND	0.100	1.00	U	GC20B-1775-35
Aroclor 1242	53469-21-9	ND	0.100	1.00	U	GC20B-1775-35
Aroclor 1248	12672-29-6	ND	0.100	1.00	U	GC20B-1775-35
Aroclor 1254	11097-69-1	ND	0.100	1.00	U	GC20B-1775-35
Aroclor 1260	11096-82-5	ND	0.100	1.00	U	GC20B-1775-35
Total PCB Amount > RL	1336-36-3	ND		1.00	U	GC20B-1775-35

Surrogate	CAS No.	% Recovery	Limits (%)	Q[1]	File ID
Tetrachloro-meta-xylene	877-09-8	84.9	60.0-120		GC20B-1775-35
Decachlorobiphenyl	2051-24-3	85.8	60.0-120		GC20B-1775-35

[1]Qualifier column where '*' denotes value outside the control limits or 'D' denotes value was diluted out.

ND: Denotes analyte not detected at a concentration greater than the PQL.
PQL (Practical Quantitation Limit). Denotes lowest analyte concentration reportable for the sample.

5

This report may not be reproduced except in full, without the written approval of Pace Analytical Services, Inc.
2190 Technology Drive | Schenectady, NY 12308 | Phone 518.346.4592 | Fax 518.381.6055 | www.pacelabs.com

Quality Control Results
Method Blank

Job Number: 13120422

Pace Analytical Services, Inc.
2190 Technology Drive
Schenectady, NY 12308
Phone: 518.346.4592
Fax: 518.381.6055

Client: TRC ENVIRONMENTAL
Project: 115058 NBHS PCB SAMPLING
Client Sample ID: Method Blank (AQ43403BRR1)
Lab Sample ID: PBLK-75

Collection Date: N/A
Sample Matrix: POLYURETHANE FOAM
Received Date: N/A
Percent Solid: N/A

	Batch ID	Method	Date	Analyst	Init Wt./Vol.	Final Vol.	Column
Analysis 1:	GC20F-1778-35	EPA Method TO-10A/EPA 8082A	12/24/2013 16:40	MCA	NA	NA	Phenomenex, Zebron ZB-1MS, 20 m, 0.18 mm ID, 0.18 µm
Prep 1:	25350	TO-10A	12/23/2013 14:00	LMB	0.00m³	5.00 mL	NA

Analyte	CAS No.	Result (ug)	PQL	Dilution Factor	Flags	File ID
Aroclor 1016	12674-11-2	ND	0.100	1.00	U	GC20F-1778-35
Aroclor 1221	11104-28-2	ND	0.100	1.00	U	GC20F-1778-35
Aroclor 1232	11141-16-5	ND	0.100	1.00	U	GC20F-1778-35
Aroclor 1242	53469-21-9	ND	0.100	1.00	U	GC20F-1778-35
Aroclor 1248	12672-29-6	ND	0.100	1.00	U	GC20F-1778-35
Aroclor 1254	11097-69-1	ND	0.100	1.00	U	GC20F-1778-35
Aroclor 1260	11096-82-5	ND	0.100	1.00	U	GC20F-1778-35
Total PCB Amount > RL	1336-36-3	ND		1.00	U	GC20F-1778-35

Surrogate	CAS No.	% Recovery	Limits (%)	Q[1]	File ID
Tetrachloro-meta-xylene	877-09-8	88.7	60.0-120		GC20F-1778-35
Decachlorobiphenyl	2051-24-3	80.5	60.0-120		GC20F-1778-35

[1]Qualifier column where '*' denotes value outside the control limits or 'D' denotes value was diluted out.

ND: Denotes analyte not detected at a concentration greater than the PQL.
PQL (Practical Quantitation Limit). Denotes lowest analyte concentration reportable for the sample.

5

This report may not be reproduced except in full, without the written approval of Pace Analytical Services, Inc.
2190 Technology Drive | Schenectady, NY 12308 | Phone 518.346.4592 | Fax 518.381.6055 | www.pacelabs.com

Quality Control Results
Lab Control Sample (LCS)
Job Number: 13120422

Pace Analytical Services, Inc.
2190 Technology Drive
Schenectady, NY 12308
Phone: 518.346.4592
Fax: 518.381.6055

Client: TRC ENVIRONMENTAL
Project: 115058 NBHS PCB SAMPLING
Client Sample ID: Lab Control Sample (AQ43403LRR1)
Lab Sample ID: LCS-75

Collection Date: N/A
Sample Matrix: POLYURETHANE FOAM
Received Date: N/A
Percent Solid: N/A

	Batch ID	Method	Date	Analyst	Init Wt./Vol.	Final Vol.	Column
Analysis 1:	GC20B-1775-36	EPA Method TO-10A/EPA 8082A	12/24/2013 16:52	MCA	NA	NA	Phenomenex, Zebron ZB-5, 20 m, 0.18 mm ID, 0.18 µm
Prep 1:	25350	TO-10A	12/23/2013 14:00	LMB	0.00m³	5.00 mL	NA

Analyte Spiked	CAS No.	Added (ug)	LCS (ug)	LCS % Rec.	Q[1]	Limits (%)
Aroclor 1232	11141-16-5	1.00	1.05	105		70.0-130

[1]Qualifier column where '*' denotes value outside the control limits. Note: RPD criteria does not apply if either the sample and duplicate sample are not detected.

Surrogate	CAS No.	% Recovery	Limits (%)	Q[1]	File ID
Tetrachloro-meta-xylene	877-09-8	92.0	60.0-120		GC20B-1775-36
Decachlorobiphenyl	2051-24-3	87.9	60.0-120		GC20B-1775-36

[1]Qualifier column where '*' denotes value outside the control limits or 'D' denotes value was diluted out.

ND: Denotes analyte not detected at a concentration greater than the PQL.
PQL (Practical Quantitation Limit). Denotes lowest analyte concentration reportable for the sample.

5

This report may not be reproduced except in full, without the written approval of Pace Analytical Services, Inc.
2190 Technology Drive | Schenectady, NY 12308 | Phone 518.346.4592 | Fax 518.381.6055 | www.pacelabs.com

Quality Control Results
Lab Control Sample (LCS)
Job Number: 13120422

Pace Analytical Services, Inc.
2190 Technology Drive
Schenectady, NY 12308
Phone: 518.346.4592
Fax: 518.381.6055

Client: TRC ENVIRONMENTAL
Project: 115058 NBHS PCB SAMPLING
Client Sample ID: Lab Control Sample (AQ43403LRR1)
Lab Sample ID: LCS-75

Collection Date: N/A
Sample Matrix: POLYURETHANE FOAM
Received Date: N/A
Percent Solid: N/A

	Batch ID	Method	Date	Analyst	Init Wt./Vol.	Final Vol.	Column
Analysis 1:	GC20F-1778-36	EPA Method TO-10A/EPA 8082A	12/24/2013 16:52	MCA	NA	NA	Phenomenex, Zebron ZB-1MS, 20 m, 0.18 mm ID, 0.18 µm
Prep 1:	25350	TO-10A	12/23/2013 14:00	LMB	0.00m³	5.00 mL	NA

Analyte Spiked	CAS No.	Added (ug)	LCS (ug)	LCS % Rec.	Q[1]	Limits (%)
Aroclor 1232	11141-16-5	1.00	1.04	104		70.0-130

[1]Qualifier column where '*' denotes value outside the control limits. Note: RPD criteria does not apply if either the sample and duplicate sample are not detected.

Surrogate	CAS No.	% Recovery	Limits (%)	Q[1]	File ID
Tetrachloro-meta-xylene	877-09-8	93.8	60.0-120		GC20F-1778-36
Decachlorobiphenyl	2051-24-3	80.3	60.0-120		GC20F-1778-36

[1]Qualifier column where '*' denotes value outside the control limits or 'D' denotes value was diluted out.

ND: Denotes analyte not detected at a concentration greater than the PQL.
PQL (Practical Quantitation Limit). Denotes lowest analyte concentration reportable for the sample.

5

This report may not be reproduced except in full, without the written approval of Pace Analytical Services, Inc.
2190 Technology Drive | Schenectady, NY 12308 | Phone 518.346.4592 | Fax 518.381.6055 | www.pacelabs.com

Quality Control Results
Lab Control Sample - Duplicate (LCSD)
Job Number: 13120422

Pace Analytical Services, Inc.
2190 Technology Drive
Schenectady, NY 12308
Phone: 518.346.4592
Fax: 518.381.6055

Client: TRC ENVIRONMENTAL
Project: 115058 NBHS PCB SAMPLING
Client Sample ID: Lab Control Sample - Duplicate (AQ43403SRR1)
Lab Sample ID: LCSD-75

Collection Date: N/A
Sample Matrix: POLYURETHANE FOAM
Received Date: N/A
Percent Solid: N/A

	Batch ID	Method	Date	Analyst	Init Wt./Vol.	Final Vol.	Column
Analysis 1:	GC20B-1775-37	EPA Method TO-10A/EPA 8082A	12/24/2013 17:05	MCA	NA	NA	Phenomenex, Zebron ZB-5, 20 m, 0.18 mm ID, 0.18 µm
Prep 1:	25350	TO-10A	12/23/2013 14:00	LMB	0.00m³	5.00 mL	NA

Analyte Spiked	CAS No.	Added (ug)	LCSD (ug)	LCSD % Rec.	Q[1]	Limits (%)	Precision: LCS % Rec.	Precision: RPD	Precision: Q[1]	Precision: Limits (%)
Aroclor 1232	11141-16-5	1.00	1.02	102		70.0-130	105	1.94		20

[1]Qualifier column where '*' denotes value outside the control limits. Note: RPD criteria does not apply if either the sample and duplicate sample are not detected.

Surrogate	CAS No.	% Recovery	Limits (%)	Q[1]	File ID
Tetrachloro-meta-xylene	877-09-8	91.3	60.0-120		GC20B-1775-37
Decachlorobiphenyl	2051-24-3	93.2	60.0-120		GC20B-1775-37

[1]Qualifier column where '*' denotes value outside the control limits or 'D' denotes value was diluted out.

ND: Denotes analyte not detected at a concentration greater than the PQL.
PQL (Practical Quantitation Limit). Denotes lowest analyte concentration reportable for the sample.

5

This report may not be reproduced except in full, without the written approval of Pace Analytical Services, Inc.
2190 Technology Drive | Schenectady, NY 12308 | Phone 518.346.4592 | Fax 518.381.6055 | www.pacelabs.com

Quality Control Results
Lab Control Sample - Duplicate (LCSD)
Job Number: 13120422

Pace Analytical Services, Inc.
2190 Technology Drive
Schenectady, NY 12308
Phone: 518.346.4592
Fax: 518.381.6055

Client: TRC ENVIRONMENTAL
Project: 115058 NBHS PCB SAMPLING
Client Sample ID: Lab Control Sample - Duplicate (AQ43403SRR1)
Lab Sample ID: LCSD-75

Collection Date: N/A
Sample Matrix: POLYURETHANE FOAM
Received Date: N/A
Percent Solid: N/A

	Batch ID	Method	Date	Analyst	Init Wt./Vol.	Final Vol.	Column
Analysis 1:	GC20F-1778-37	EPA Method TO-10A/EPA 8082A	12/24/2013 17:05	MCA	NA	NA	Phenomenex, Zebron ZB-1MS, 20 m, 0.18 mm ID, 0.18 µm
Prep 1:	25350	TO-10A	12/23/2013 14:00	LMB	0.00m³	5.00 mL	NA

Analyte Spiked	CAS No.	Added (ug)	LCSD (ug)	LCSD % Rec.	Q[1]	Limits (%)	Precision: LCS % Rec.	Precision: RPD	Precision: Q[1]	Precision: Limits (%)
Aroclor 1232	11141-16-5	1.00	1.00	100		70.0-130	104	4.88		20

[1]Qualifier column where '*' denotes value outside the control limits. Note: RPD criteria does not apply if either the sample and duplicate sample are not detected.

Surrogate	CAS No.	% Recovery	Limits (%)	Q[1]	File ID
Tetrachloro-meta-xylene	877-09-8	93.3	60.0-120		GC20F-1778-37
Decachlorobiphenyl	2051-24-3	85.4	60.0-120		GC20F-1778-37

[1]Qualifier column where '*' denotes value outside the control limits or 'D' denotes value was diluted out.

ND: Denotes analyte not detected at a concentration greater than the PQL.
PQL (Practical Quantitation Limit). Denotes lowest analyte concentration reportable for the sample.

5

This report may not be reproduced except in full, without the written approval of Pace Analytical Services, Inc.
2190 Technology Drive | Schenectady, NY 12308 | Phone 518.346.4592 | Fax 518.381.6055 | www.pacelabs.com

ANALYTICAL REPORT

Lab Number:	L1325778
Client:	TRC Environmental Consultants Wannalancit Mills 650 Suffolk Street Lowell, MA 01854
ATTN:	David Sullivan
Phone:	(978) 656-3565
Project Name:	NBHS IRA PSWS
Project Number:	115058
Report Date:	12/26/13

The original project report/data package is held by Alpha Analytical. This report/data package is paginated and should be reproduced only in its entirety. Alpha Analytical holds no responsibility for results and/or data that are not consistent with the original.

Certifications & Approvals: NY (11627), CT (PH-0141), NH (2206), NJ NELAP (MA015), RI (LAO00299), PA (68-02089), LA NELAP (03090), FL (E87814), TX (T104704419), WA (C954), DOD (L2217.01), USDA (Permit #P330-11-00109), US Army Corps of Engineers.

320 Forbes Boulevard, Mansfield, MA 02048-1806
508-822-9300 (Fax) 508-822-3288 800-624-9220 - www.alphalab.com

Project Name: NBHS IRA PSWS
Project Number: 115058

Lab Number: L1325778
Report Date: 12/26/13

Alpha Sample ID	Client ID	Sample Location	Collection Date/Time
L1325778-01	VAPOR INLET	NEW BEDFORD, MA	12/17/13 11:42
L1325778-02	VAPOR OUTLET	NEW BEDFORD, MA	12/17/13 11:52

Project Name: NBHS IRA PSWS **Lab Number:** L1325778

Project Number: 115058 **Report Date:** 12/26/13

MADEP MCP Response Action Analytical Report Certification

This form provides certifications for all samples performed by MCP methods. Please refer to the Sample Results and Container Information sections of this report for specification of MCP methods used for each analysis. The following questions pertain only to MCP Analytical Methods.

An affirmative response to questions A through F is required for "Presumptive Certainty" status		
A	Were all samples received in a condition consistent with those described on the Chain-of-Custody, properly preserved (including temperature) in the field or laboratory, and prepared/analyzed within method holding times?	YES
B	Were the analytical method(s) and all associated QC requirements specified in the selected CAM protocol(s) followed?	YES
C	Were all required corrective actions and analytical response actions specified in the selected CAM protocol(s) implemented for all identified performance standard non-conformances?	YES
D	Does the laboratory report comply with all the reporting requirements specified in CAM VII A, "Quality Assurance and Quality Control Guidelines for the Acquisition and Reporting of Analytical Data?"	YES
E a.	VPH, EPH, and APH Methods only: Was each method conducted without significant modification(s)? (Refer to the individual method(s) for a list of significant modifications).	N/A
E b.	APH and TO-15 Methods only: Was the complete analyte list reported for each method?	YES
F	Were all applicable CAM protocol QC and performance standard non-conformances identified and evaluated in a laboratory narrative (including all "No" responses to Questions A through E)?	YES

A response to questions G, H and I is required for "Presumptive Certainty" status		
G	Were the reporting limits at or below all CAM reporting limits specified in the selected CAM protocol(s)?	NO
H	Were all QC performance standards specified in the CAM protocol(s) achieved?	YES
I	Were results reported for the complete analyte list specified in the selected CAM protocol(s)?	YES

For any questions answered "No", please refer to the case narrative section on the following page(s).

Please note that sample matrix information is located in the Sample Results section of this report.

Project Name: NBHS IRA PSWS **Lab Number:** L1325778
Project Number: 115058 **Report Date:** 12/26/13

Case Narrative

The samples were received in accordance with the Chain of Custody and no significant deviations were encountered during the preparation or analysis unless otherwise noted. Sample Receipt, Container Information, and the Chain of Custody are located at the back of the report.

Results contained within this report relate only to the samples submitted under this Alpha Lab Number and meet all of the requirements of NELAC, for all NELAC accredited parameters. The data presented in this report is organized by parameter (i.e. VOC, SVOC, etc.). Sample specific Quality Control data (i.e. Surrogate Spike Recovery) is reported at the end of the target analyte list for each individual sample, followed by the Laboratory Batch Quality Control at the end of each parameter. If a sample was re-analyzed or re-extracted due to a required quality control corrective action and if both sets of data are reported, the Laboratory ID of the re-analysis or re-extraction is designated with an "R" or "RE", respectively. When multiple Batch Quality Control elements are reported (e.g. more than one LCS), the associated samples for each element are noted in the grey shaded header line of each data table. Any Laboratory Batch, Sample Specific % recovery or RPD value that is outside the listed Acceptance Criteria is bolded in the report. Performance criteria for CAM and RCP methods allow for some LCS compound failures to occur and still be within method compliance. In these instances, the specific failures are not narrated but are noted in the associated QC table. This information is also incorporated in the Data Usability format for our Data Merger tool where it can be reviewed along with any associated usability implications. Soil/sediments, solids and tissues are reported on a dry weight basis unless otherwise noted. Definitions of all data qualifiers and acronyms used in this report are provided in the Glossary located at the back of the report.

In reference to questions H (CAM) or 4 (RCP) when "NO" is checked, the performance criteria for CAM and RCP methods allow for some quality control failures to occur and still be within method compliance. In these instances the specific failure is not narrated but noted in the associated QC table. The information is also incorporated in the Data Usability format of our Data Merger tool where it can be reviewed along with any associated usability implications.

Please see the associated ADEx data file for a comparison of laboratory reporting limits that were achieved with the regulatory Numerical Standards requested on the Chain of Custody.

HOLD POLICY
For samples submitted on hold, Alpha's policy is to hold samples (with the exception of Air canisters) free of charge for 21 calendar days from the date the project is completed. After 21 calendar days, we will dispose of all samples submitted including those put on hold unless you have contacted your Client Service Representative and made arrangements for Alpha to continue to hold the samples. Air canisters will be disposed after 3 business days from the date the project is completed.

Please contact Client Services at 800-624-9220 with any questions.

Project Name:	NBHS IRA PSWS	**Lab Number:**	L1325778
Project Number:	115058	**Report Date:**	12/26/13

Case Narrative (continued)

LOGIN NARRATIVE

MCP Related Narratives

Canisters were released from the laboratory on December 16, 2013. The canister certification data is provided as an addendum.

MCP Volatile Organics in Air

In reference to question G:

One or more of the target analytes did not achieve the requested CAM reporting limits.

L1325778-01 results for Acetone should be considered estimated due to co-elution with a non-target peak.

I, the undersigned, attest under the pains and penalties of perjury that, to the best of my knowledge and belief and based upon my personal inquiry of those responsible for providing the information contained in this analytical report, such information is accurate and complete. This certificate of analysis is not complete unless this page accompanies any and all pages of this report.

Authorized Signature: Andy Rezendes

Title: Technical Director/Representative Date: 12/26/13

AIR

Project Name: NBHS IRA PSWS
Project Number: 115058
Lab Number: L1325778
Report Date: 12/26/13

SAMPLE RESULTS

Lab ID: L1325778-01
Client ID: VAPOR INLET
Sample Location: NEW BEDFORD, MA
Matrix: Soil_Vapor
Anaytical Method: 101,TO-15
Analytical Date: 12/21/13 01:05
Analyst: RY

Date Collected: 12/17/13 11:42
Date Received: 12/18/13
Field Prep: Not Specified

Parameter	ppbV Results	ppbV RL	ppbV MDL	ug/m3 Results	ug/m3 RL	ug/m3 MDL	Qualifier	Dilution Factor
MCP Volatile Organics in Air - Mansfield Lab								
Vinyl chloride	1.45	0.200	--	3.71	0.511	--		1
Bromomethane	ND	0.200	--	ND	0.777	--		1
Acetone	4.59	1.00	--	10.9	2.38	--		1
1,1-Dichloroethene	ND	0.200	--	ND	0.793	--		1
Methylene chloride	ND	1.40	--	ND	4.86	--		1
trans-1,2-Dichloroethene	0.785	0.200	--	3.11	0.793	--		1
1,1-Dichloroethane	ND	0.200	--	ND	0.809	--		1
Methyl tert butyl ether	ND	0.200	--	ND	0.721	--		1
2-Butanone	1.02	0.200	--	3.01	0.590	--		1
cis-1,2-Dichloroethene	1.63	0.200	--	6.46	0.793	--		1
Chloroform	ND	0.200	--	ND	0.977	--		1
1,2-Dichloroethane	ND	0.200	--	ND	0.809	--		1
1,1,1-Trichloroethane	ND	0.200	--	ND	1.09	--		1
Benzene	0.338	0.200	--	1.08	0.639	--		1
Carbon tetrachloride	ND	0.200	--	ND	1.26	--		1
1,2-Dichloropropane	ND	0.200	--	ND	0.924	--		1
Bromodichloromethane	ND	0.200	--	ND	1.34	--		1
1,4-Dioxane	ND	0.200	--	ND	0.721	--		1
Trichloroethene	0.539	0.200	--	2.90	1.07	--		1
cis-1,3-Dichloropropene	ND	0.200	--	ND	0.908	--		1
4-Methyl-2-pentanone	ND	0.200	--	ND	0.820	--		1
trans-1,3-Dichloropropene	ND	0.200	--	ND	0.908	--		1
1,1,2-Trichloroethane	ND	0.200	--	ND	1.09	--		1
Toluene	4.84	0.200	--	18.2	0.754	--		1

Project Name: NBHS IRA PSWS
Project Number: 115058
Lab Number: L1325778
Report Date: 12/26/13

SAMPLE RESULTS

Lab ID: L1325778-01
Client ID: VAPOR INLET
Sample Location: NEW BEDFORD, MA
Date Collected: 12/17/13 11:42
Date Received: 12/18/13
Field Prep: Not Specified

Parameter	ppbV Results	ppbV RL	ppbV MDL	ug/m3 Results	ug/m3 RL	ug/m3 MDL	Qualifier	Dilution Factor
MCP Volatile Organics in Air - Mansfield Lab								
Dibromochloromethane	ND	0.200	--	ND	1.70	--		1
1,2-Dibromoethane	ND	0.200	--	ND	1.54	--		1
Tetrachloroethene	ND	0.200	--	ND	1.36	--		1
Chlorobenzene	ND	0.200	--	ND	0.921	--		1
Ethylbenzene	0.506	0.200	--	2.20	0.869	--		1
p/m-Xylene	1.48	0.400	--	6.43	1.74	--		1
Bromoform	ND	0.200	--	ND	2.07	--		1
Styrene	ND	0.200	--	ND	0.852	--		1
1,1,2,2-Tetrachloroethane	ND	0.200	--	ND	1.37	--		1
o-Xylene	0.558	0.200	--	2.42	0.869	--		1
1,3-Dichlorobenzene	ND	0.200	--	ND	1.20	--		1
1,4-Dichlorobenzene	ND	0.200	--	ND	1.20	--		1
1,2-Dichlorobenzene	ND	0.200	--	ND	1.20	--		1
1,2,4-Trichlorobenzene	ND	0.200	--	ND	1.48	--		1
Naphthalene	ND	0.200	--	ND	1.05	--		1
Hexachlorobutadiene	ND	0.200	--	ND	2.13	--		1

Internal Standard	% Recovery	Qualifier	Acceptance Criteria
1,4-Difluorobenzene	82		60-140
Bromochloromethane	80		60-140
chlorobenzene-d5	89		60-140

Project Name: NBHS IRA PSWS
Project Number: 115058
Lab Number: L1325778
Report Date: 12/26/13

SAMPLE RESULTS

Lab ID: L1325778-02
Client ID: VAPOR OUTLET
Sample Location: NEW BEDFORD, MA
Matrix: Soil_Vapor
Anaytical Method: 101,TO15-SIM
Analytical Date: 12/21/13 00:01
Analyst: RY

Date Collected: 12/17/13 11:52
Date Received: 12/18/13
Field Prep: Not Specified

Parameter	ppbV Results	ppbV RL	ppbV MDL	ug/m3 Results	ug/m3 RL	ug/m3 MDL	Qualifier	Dilution Factor
MCP Volatile Organics in Air by SIM - Mansfield Lab								
Vinyl chloride	2.94	0.020	--	7.52	0.051	--		1
Bromomethane	ND	0.020	--	ND	0.078	--		1
Acetone	3.10	1.00	--	7.36	2.38	--		1
1,1-Dichloroethene	0.026	0.020	--	0.103	0.079	--		1
Methylene chloride	ND	1.40	--	ND	4.86	--		1
trans-1,2-Dichloroethene	5.14	0.020	--	20.4	0.079	--		1
1,1-Dichloroethane	ND	0.020	--	ND	0.081	--		1
Methyl tert butyl ether	ND	0.020	--	ND	0.072	--		1
2-Butanone	ND	0.200	--	ND	0.590	--		1
cis-1,2-Dichloroethene	15.4	0.020	--	61.1	0.079	--		1
Chloroform	0.129	0.020	--	0.630	0.098	--		1
1,2-Dichloroethane	ND	0.020	--	ND	0.081	--		1
1,1,1-Trichloroethane	ND	0.020	--	ND	0.109	--		1
Benzene	0.117	0.100	--	0.374	0.319	--		1
Carbon tetrachloride	ND	0.020	--	ND	0.126	--		1
1,2-Dichloropropane	ND	0.020	--	ND	0.092	--		1
Bromodichloromethane	ND	0.020	--	ND	0.134	--		1
1,4-Dioxane	ND	0.100	--	ND	0.360	--		1
Trichloroethene	ND	0.020	--	ND	0.107	--		1
cis-1,3-Dichloropropene	ND	0.020	--	ND	0.091	--		1
4-Methyl-2-pentanone	ND	0.200	--	ND	0.820	--		1
trans-1,3-Dichloropropene	ND	0.020	--	ND	0.091	--		1
1,1,2-Trichloroethane	ND	0.020	--	ND	0.109	--		1
Toluene	0.620	0.050	--	2.34	0.188	--		1

Project Name: NBHS IRA PSWS
Project Number: 115058
Lab Number: L1325778
Report Date: 12/26/13

SAMPLE RESULTS

Lab ID: L1325778-02
Client ID: VAPOR OUTLET
Sample Location: NEW BEDFORD, MA
Date Collected: 12/17/13 11:52
Date Received: 12/18/13
Field Prep: Not Specified

Parameter	ppbV Results	ppbV RL	ppbV MDL	ug/m3 Results	ug/m3 RL	ug/m3 MDL	Qualifier	Dilution Factor
MCP Volatile Organics in Air by SIM - Mansfield Lab								
Dibromochloromethane	ND	0.020	--	ND	0.170	--		1
1,2-Dibromoethane	ND	0.020	--	ND	0.154	--		1
Tetrachloroethene	ND	0.020	--	ND	0.136	--		1
Chlorobenzene	ND	0.020	--	ND	0.092	--		1
Ethylbenzene	0.165	0.020	--	0.717	0.087	--		1
p/m-Xylene	0.595	0.040	--	2.58	0.174	--		1
Bromoform	ND	0.020	--	ND	0.207	--		1
Styrene	ND	0.020	--	ND	0.085	--		1
1,1,2,2-Tetrachloroethane	ND	0.020	--	ND	0.137	--		1
o-Xylene	0.205	0.020	--	0.890	0.087	--		1
1,3-Dichlorobenzene	ND	0.020	--	ND	0.120	--		1
1,4-Dichlorobenzene	ND	0.020	--	ND	0.120	--		1
1,2-Dichlorobenzene	ND	0.020	--	ND	0.120	--		1
1,2,4-Trichlorobenzene	ND	0.050	--	ND	0.371	--		1
Naphthalene	ND	0.050	--	ND	0.262	--		1
Hexachlorobutadiene	ND	0.050	--	ND	0.533	--		1

Internal Standard	% Recovery	Qualifier	Acceptance Criteria
1,4-difluorobenzene	85		60-140
bromochloromethane	80		60-140
chlorobenzene-d5	88		60-140

Project Name: NBHS IRA PSWS
Project Number: 115058
Lab Number: L1325778
Report Date: 12/26/13

Method Blank Analysis
Batch Quality Control

Analytical Method: 101,TO-15
Analytical Date: 12/20/13 15:05

Parameter	ppbV Results	ppbV RL	ppbV MDL	ug/m3 Results	ug/m3 RL	ug/m3 MDL	Qualifier	Dilution Factor
MCP Volatile Organics in Air - Mansfield Lab for sample(s): 01 Batch: WG660683-4								
Vinyl chloride	ND	0.200	--	ND	0.511	--		1
Bromomethane	ND	0.200	--	ND	0.777	--		1
Acetone	ND	1.00	--	ND	2.38	--		1
1,1-Dichloroethene	ND	0.200	--	ND	0.793	--		1
Methylene chloride	ND	1.40	--	ND	4.86	--		1
trans-1,2-Dichloroethene	ND	0.200	--	ND	0.793	--		1
1,1-Dichloroethane	ND	0.200	--	ND	0.809	--		1
Methyl tert butyl ether	ND	0.200	--	ND	0.721	--		1
2-Butanone	ND	0.200	--	ND	0.590	--		1
cis-1,2-Dichloroethene	ND	0.200	--	ND	0.793	--		1
Chloroform	ND	0.200	--	ND	0.977	--		1
1,2-Dichloroethane	ND	0.200	--	ND	0.809	--		1
1,1,1-Trichloroethane	ND	0.200	--	ND	1.09	--		1
Benzene	ND	0.200	--	ND	0.639	--		1
Carbon tetrachloride	ND	0.200	--	ND	1.26	--		1
1,2-Dichloropropane	ND	0.200	--	ND	0.924	--		1
Bromodichloromethane	ND	0.200	--	ND	1.34	--		1
1,4-Dioxane	ND	0.200	--	ND	0.721	--		1
Trichloroethene	ND	0.200	--	ND	1.07	--		1
cis-1,3-Dichloropropene	ND	0.200	--	ND	0.908	--		1
4-Methyl-2-pentanone	ND	0.200	--	ND	0.820	--		1
trans-1,3-Dichloropropene	ND	0.200	--	ND	0.908	--		1
1,1,2-Trichloroethane	ND	0.200	--	ND	1.09	--		1
Toluene	ND	0.200	--	ND	0.754	--		1
Dibromochloromethane	ND	0.200	--	ND	1.70	--		1

Project Name: NBHS IRA PSWS
Project Number: 115058
Lab Number: L1325778
Report Date: 12/26/13

Method Blank Analysis
Batch Quality Control

Analytical Method: 101,TO-15
Analytical Date: 12/20/13 15:05

Parameter	ppbV Results	ppbV RL	ppbV MDL	ug/m3 Results	ug/m3 RL	ug/m3 MDL	Qualifier	Dilution Factor
MCP Volatile Organics in Air - Mansfield Lab for sample(s): 01 Batch: WG660683-4								
1,2-Dibromoethane	ND	0.200	--	ND	1.54	--		1
Tetrachloroethene	ND	0.200	--	ND	1.36	--		1
Chlorobenzene	ND	0.200	--	ND	0.921	--		1
Ethylbenzene	ND	0.200	--	ND	0.869	--		1
p/m-Xylene	ND	0.400	--	ND	1.74	--		1
Bromoform	ND	0.200	--	ND	2.07	--		1
Styrene	ND	0.200	--	ND	0.852	--		1
1,1,2,2-Tetrachloroethane	ND	0.200	--	ND	1.37	--		1
o-Xylene	ND	0.200	--	ND	0.869	--		1
1,3-Dichlorobenzene	ND	0.200	--	ND	1.20	--		1
1,4-Dichlorobenzene	ND	0.200	--	ND	1.20	--		1
1,2-Dichlorobenzene	ND	0.200	--	ND	1.20	--		1
1,2,4-Trichlorobenzene	ND	0.200	--	ND	1.48	--		1
Naphthalene	ND	0.200	--	ND	1.05	--		1
Hexachlorobutadiene	ND	0.200	--	ND	2.13	--		1

Project Name: NBHS IRA PSWS
Project Number: 115058
Lab Number: L1325778
Report Date: 12/26/13

Method Blank Analysis
Batch Quality Control

Analytical Method: 101,TO15-SIM
Analytical Date: 12/20/13 15:05

Parameter	ppbV Results	ppbV RL	ppbV MDL	ug/m3 Results	ug/m3 RL	ug/m3 MDL	Qualifier	Dilution Factor
MCP Volatile Organics in Air by SIM - Mansfield Lab for sample(s): 02 Batch: WG660684-4								
Dichlorodifluoromethane	ND	0.050	--	ND	0.247	--		1
Chloromethane	ND	0.500	--	ND	1.03	--		1
Freon-114	ND	0.050	--	ND	0.349	--		1
Vinyl chloride	ND	0.020	--	ND	0.051	--		1
1,3-Butadiene	ND	0.020	--	ND	0.044	--		1
Bromomethane	ND	0.020	--	ND	0.078	--		1
Chloroethane	ND	0.020	--	ND	0.053	--		1
Acetone	ND	1.00	--	ND	2.38	--		1
Trichlorofluoromethane	ND	0.050	--	ND	0.281	--		1
Acrylonitrile	ND	0.500	--	ND	1.09	--		1
1,1-Dichloroethene	ND	0.020	--	ND	0.079	--		1
Methylene chloride	ND	1.40	--	ND	4.86	--		1
Freon-113	ND	0.050	--	ND	0.383	--		1
Halothane	ND	0.050	--	ND	0.404	--		1
trans-1,2-Dichloroethene	ND	0.020	--	ND	0.079	--		1
1,1-Dichloroethane	ND	0.020	--	ND	0.081	--		1
Methyl tert butyl ether	ND	0.020	--	ND	0.072	--		1
2-Butanone	ND	0.200	--	ND	0.590	--		1
cis-1,2-Dichloroethene	ND	0.020	--	ND	0.079	--		1
Chloroform	ND	0.020	--	ND	0.098	--		1
1,2-Dichloroethane	ND	0.020	--	ND	0.081	--		1
1,1,1-Trichloroethane	ND	0.020	--	ND	0.109	--		1
Benzene	ND	0.100	--	ND	0.319	--		1
Carbon tetrachloride	ND	0.020	--	ND	0.126	--		1
1,2-Dichloropropane	ND	0.020	--	ND	0.092	--		1

Project Name: NBHS IRA PSWS
Project Number: 115058
Lab Number: L1325778
Report Date: 12/26/13

Method Blank Analysis
Batch Quality Control

Analytical Method: 101,TO15-SIM
Analytical Date: 12/20/13 15:05

Parameter	ppbV Results	ppbV RL	ppbV MDL	ug/m3 Results	ug/m3 RL	ug/m3 MDL	Qualifier	Dilution Factor
MCP Volatile Organics in Air by SIM - Mansfield Lab for sample(s): 02 Batch: WG660684-4								
Bromodichloromethane	ND	0.020	--	ND	0.134	--		1
1,4-Dioxane	ND	0.100	--	ND	0.360	--		1
Trichloroethene	ND	0.020	--	ND	0.107	--		1
cis-1,3-Dichloropropene	ND	0.020	--	ND	0.091	--		1
4-Methyl-2-pentanone	ND	0.200	--	ND	0.820	--		1
trans-1,3-Dichloropropene	ND	0.020	--	ND	0.091	--		1
1,1,2-Trichloroethane	ND	0.020	--	ND	0.109	--		1
Toluene	ND	0.050	--	ND	0.188	--		1
Dibromochloromethane	ND	0.020	--	ND	0.170	--		1
1,2-Dibromoethane	ND	0.020	--	ND	0.154	--		1
Tetrachloroethene	ND	0.020	--	ND	0.136	--		1
1,1,1,2-Tetrachloroethane	ND	0.020	--	ND	0.137	--		1
Chlorobenzene	ND	0.020	--	ND	0.092	--		1
Ethylbenzene	ND	0.020	--	ND	0.087	--		1
p/m-Xylene	ND	0.040	--	ND	0.174	--		1
Bromoform	ND	0.020	--	ND	0.207	--		1
Styrene	ND	0.020	--	ND	0.085	--		1
1,1,2,2-Tetrachloroethane	ND	0.020	--	ND	0.137	--		1
o-Xylene	ND	0.020	--	ND	0.087	--		1
Isopropylbenzene	ND	0.500	--	ND	2.46	--		1
1,3,5-Trimethybenzene	ND	0.020	--	ND	0.098	--		1
1,2,4-Trimethylbenzene	ND	0.020	--	ND	0.098	--		1
1,3-Dichlorobenzene	ND	0.020	--	ND	0.120	--		1
1,4-Dichlorobenzene	ND	0.020	--	ND	0.120	--		1
sec-Butylbenzene	ND	0.500	--	ND	2.74	--		1

Project Name: NBHS IRA PSWS
Project Number: 115058
Lab Number: L1325778
Report Date: 12/26/13

Method Blank Analysis
Batch Quality Control

Analytical Method: 101,TO15-SIM
Analytical Date: 12/20/13 15:05

Parameter	ppbV Results	ppbV RL	ppbV MDL	ug/m3 Results	ug/m3 RL	ug/m3 MDL	Qualifier	Dilution Factor
MCP Volatile Organics in Air by SIM - Mansfield Lab for sample(s): 02 Batch: WG660684-4								
p-Isopropyltoluene	ND	0.500	--	ND	2.74	--		1
1,2-Dichlorobenzene	ND	0.020	--	ND	0.120	--		1
n-Butylbenzene	ND	0.500	--	ND	2.74	--		1
1,2,4-Trichlorobenzene	ND	0.050	--	ND	0.371	--		1
Naphthalene	ND	0.050	--	ND	0.262	--		1
1,2,3-Trichlorobenzene	ND	0.050	--	ND	0.371	--		1
Hexachlorobutadiene	ND	0.050	--	ND	0.533	--		1

Lab Control Sample Analysis
Batch Quality Control

Project Name: NBHS IRA PSWS
Project Number: 115058

Lab Number: L1325778
Report Date: 12/26/13

Parameter	LCS %Recovery	Qual	LCSD %Recovery	Qual	%Recovery Limits	RPD	Qual	RPD Limits
MCP Volatile Organics in Air - Mansfield Lab Associated sample(s): 01 Batch: WG660683-3								
Vinyl chloride	111		-		70-130	-		
Bromomethane	110		-		70-130	-		
Acetone	102		-		50-150	-		
1,1-Dichloroethene	116		-		70-130	-		
Methylene chloride	101		-		70-130	-		
trans-1,2-Dichloroethene	97		-		70-130	-		
1,1-Dichloroethane	108		-		70-130	-		
Methyl tert butyl ether	107		-		70-130	-		
2-Butanone	88		-		70-130	-		
cis-1,2-Dichloroethene	119		-		70-130	-		
Chloroform	119		-		70-130	-		
1,2-Dichloroethane	113		-		70-130	-		
1,1,1-Trichloroethane	123		-		70-130	-		
Benzene	104		-		70-130	-		
Carbon tetrachloride	122		-		70-130	-		
1,2-Dichloropropane	105		-		70-130	-		
Bromodichloromethane	114		-		70-130	-		
1,4-Dioxane	96		-		50-150	-		
Trichloroethene	102		-		70-130	-		
cis-1,3-Dichloropropene	117		-		70-130	-		
4-Methyl-2-pentanone	93		-		70-130	-		

Lab Control Sample Analysis
Batch Quality Control

Project Name: NBHS IRA PSWS
Project Number: 115058

Lab Number: L1325778
Report Date: 12/26/13

Parameter	LCS %Recovery	Qual	LCSD %Recovery	Qual	%Recovery Limits	RPD	Qual	RPD Limits
MCP Volatile Organics in Air - Mansfield Lab Associated sample(s): 01 Batch: WG660683-3								
trans-1,3-Dichloropropene	107		-		70-130	-		
1,1,2-Trichloroethane	109		-		70-130	-		
Toluene	104		-		70-130	-		
Dibromochloromethane	105		-		70-130	-		
1,2-Dibromoethane	107		-		70-130	-		
Tetrachloroethene	112		-		70-130	-		
Chlorobenzene	101		-		70-130	-		
Ethylbenzene	102		-		70-130	-		
p/m-Xylene	106		-		70-130	-		
Bromoform	104		-		70-130	-		
Styrene	94		-		70-130	-		
1,1,2,2-Tetrachloroethane	104		-		70-130	-		
o-Xylene	104		-		70-130	-		
1,3-Dichlorobenzene	85		-		70-130	-		
1,4-Dichlorobenzene	82		-		70-130	-		
1,2-Dichlorobenzene	80		-		70-130	-		
1,2,4-Trichlorobenzene	127		-		50-150	-		
Naphthalene	99		-		50-150	-		
Hexachlorobutadiene	133		-		50-150	-		

Lab Control Sample Analysis
Batch Quality Control

Project Name: NBHS IRA PSWS
Project Number: 115058

Lab Number: L1325778
Report Date: 12/26/13

Parameter	LCS %Recovery	Qual	LCSD %Recovery	Qual	%Recovery Limits	RPD	Qual	RPD Limits
MCP Volatile Organics in Air by SIM - Mansfield Lab Associated sample(s): 02 Batch: WG660684-3								
Dichlorodifluoromethane	119		-		70-130	-		
Chloromethane	98		-		70-130	-		
1,2-Dichloro-1,1,2,2-tetrafluoroethane	116		-		70-130	-		
Vinyl chloride	113		-		70-130	-		
1,3-Butadiene	104		-		70-130	-		
Bromomethane	113		-		70-130	-		
Chloroethane	113		-		70-130	-		
Acetone	100		-		50-150	-		
Trichlorofluoromethane	122		-		70-130	-		
1,1-Dichloroethene	118		-		70-130	-		
Methylene chloride	100		-		70-130	-		
1,1,2-Trichloro-1,2,2-Trifluoroethane	114		-		70-130	-		
Halothane	110		-		70-130	-		
trans-1,2-Dichloroethene	100		-		70-130	-		
1,1-Dichloroethane	114		-		70-130	-		
Methyl tert butyl ether	108		-		70-130	-		
2-Butanone	86		-		70-130	-		
cis-1,2-Dichloroethene	125		-		70-130	-		
Chloroform	120		-		70-130	-		
1,2-Dichloroethane	114		-		70-130	-		
1,1,1-Trichloroethane	127		-		70-130	-		

Lab Control Sample Analysis
Batch Quality Control

Project Name: NBHS IRA PSWS
Project Number: 115058

Lab Number: L1325778
Report Date: 12/26/13

Parameter	LCS %Recovery	Qual	LCSD %Recovery	Qual	%Recovery Limits	RPD	Qual	RPD Limits
MCP Volatile Organics in Air by SIM - Mansfield Lab Associated sample(s): 02 Batch: WG660684-3								
Benzene	107		-		70-130	-		
Carbon tetrachloride	130		-		70-130	-		
1,2-Dichloropropane	112		-		70-130	-		
Bromodichloromethane	119		-		70-130	-		
1,4-Dioxane	98		-		50-150	-		
Trichloroethene	106		-		70-130	-		
cis-1,3-Dichloropropene	125		-		70-130	-		
4-Methyl-2-pentanone	98		-		70-130	-		
trans-1,3-Dichloropropene	113		-		70-130	-		
1,1,2-Trichloroethane	114		-		70-130	-		
Toluene	105		-		70-130	-		
Dibromochloromethane	112		-		70-130	-		
1,2-Dibromoethane	111		-		70-130	-		
Tetrachloroethene	106		-		70-130	-		
Chlorobenzene	102		-		70-130	-		
Ethylbenzene	104		-		70-130	-		
p/m-Xylene	107		-		70-130	-		
Bromoform	106		-		70-130	-		
Styrene	96		-		70-130	-		
1,1,2,2-Tetrachloroethane	110		-		70-130	-		
o-Xylene	101		-		70-130	-		

Lab Control Sample Analysis
Batch Quality Control

Project Name: NBHS IRA PSWS
Project Number: 115058

Lab Number: L1325778
Report Date: 12/26/13

Parameter	LCS %Recovery	Qual	LCSD %Recovery	Qual	%Recovery Limits	RPD	Qual	RPD Limits
MCP Volatile Organics in Air by SIM - Mansfield Lab Associated sample(s): 02 Batch: WG660684-3								
1,3,5-Trimethylbenzene	96		-		70-130	-		
1,2,4-Trimethylbenzene	99		-		70-130	-		
1,3-Dichlorobenzene	98		-		70-130	-		
1,4-Dichlorobenzene	94		-		70-130	-		
1,2-Dichlorobenzene	103		-		70-130	-		
1,2,4-Trichlorobenzene	145		-		50-150	-		
Naphthalene	115		-		50-150	-		
1,2,3-Trichlorobenzene	127		-		70-130	-		
Hexachlorobutadiene	146		-		50-150	-		

Lab Duplicate Analysis
Batch Quality Control

Project Name: NBHS IRA PSWS
Project Number: 115058

Lab Number: L1325778
Report Date: 12/26/13

Parameter	Native Sample	Duplicate Sample	Units	RPD	Qual	RPD Limits
MCP Volatile Organics in Air - Mansfield Lab Associated sample(s): 01 QC Batch ID: WG660683-5 QC Sample: L1325646-01 Client ID: DUP Sample						
Vinyl chloride	ND	ND	ppbV	NC		25
Bromomethane	ND	ND	ppbV	NC		25
Acetone	19.0	19.4	ppbV	2		25
1,1-Dichloroethene	ND	ND	ppbV	NC		25
Methylene chloride	8.77	8.60	ppbV	2		25
trans-1,2-Dichloroethene	ND	ND	ppbV	NC		25
1,1-Dichloroethane	ND	ND	ppbV	NC		25
Methyl tert butyl ether	ND	ND	ppbV	NC		25
2-Butanone	0.375	0.345	ppbV	8		25
cis-1,2-Dichloroethene	ND	ND	ppbV	NC		25
Chloroform	ND	ND	ppbV	NC		25
1,2-Dichloroethane	ND	ND	ppbV	NC		25
1,1,1-Trichloroethane	ND	ND	ppbV	NC		25
Benzene	0.268	0.237	ppbV	12		25
Carbon tetrachloride	ND	ND	ppbV	NC		25
1,2-Dichloropropane	ND	ND	ppbV	NC		25
Bromodichloromethane	ND	ND	ppbV	NC		25
1,4-Dioxane	ND	ND	ppbV	NC		25
Trichloroethene	0.277	0.254	ppbV	9		25

Lab Duplicate Analysis
Batch Quality Control

Project Name: NBHS IRA PSWS
Project Number: 115058

Lab Number: L1325778
Report Date: 12/26/13

Parameter	Native Sample	Duplicate Sample	Units	RPD	RPD Limits
MCP Volatile Organics in Air - Mansfield Lab Associated sample(s): 01 QC Batch ID: WG660683-5 QC Sample: L1325646-01 Client ID: DUP Sample					
cis-1,3-Dichloropropene	ND	ND	ppbV	NC	25
4-Methyl-2-pentanone	ND	ND	ppbV	NC	25
trans-1,3-Dichloropropene	ND	ND	ppbV	NC	25
1,1,2-Trichloroethane	ND	ND	ppbV	NC	25
Toluene	2.61	2.45	ppbV	6	25
Dibromochloromethane	ND	ND	ppbV	NC	25
1,2-Dibromoethane	ND	ND	ppbV	NC	25
Tetrachloroethene	ND	ND	ppbV	NC	25
Chlorobenzene	ND	ND	ppbV	NC	25
Ethylbenzene	ND	ND	ppbV	NC	25
p/m-Xylene	0.512	0.478	ppbV	7	25
Bromoform	ND	ND	ppbV	NC	25
Styrene	ND	ND	ppbV	NC	25
1,1,2,2-Tetrachloroethane	ND	ND	ppbV	NC	25
o-Xylene	0.228	0.205	ppbV	11	25
1,3-Dichlorobenzene	ND	ND	ppbV	NC	25
1,4-Dichlorobenzene	ND	ND	ppbV	NC	25
1,2-Dichlorobenzene	ND	ND	ppbV	NC	25
1,2,4-Trichlorobenzene	ND	ND	ppbV	NC	25

Lab Duplicate Analysis
Batch Quality Control

Project Name: NBHS IRA PSWS
Project Number: 115058

Lab Number: L1325778
Report Date: 12/26/13

Parameter	Native Sample	Duplicate Sample	Units	RPD	RPD Limits
MCP Volatile Organics in Air - Mansfield Lab Associated sample(s): 01 QC Batch ID: WG660683-5 QC Sample: L1325646-01 Client ID: DUP Sample					
Naphthalene	ND	ND	ppbV	NC	25
Hexachlorobutadiene	ND	ND	ppbV	NC	25

Lab Duplicate Analysis
Batch Quality Control

Project Name: NBHS IRA PSWS
Project Number: 115058

Lab Number: L1325778
Report Date: 12/26/13

Parameter	Native Sample	Duplicate Sample	Units	RPD	RPD Limits
MCP Volatile Organics in Air by SIM - Mansfield Lab Associated sample(s): 02 QC Batch ID: WG660684-5 QC Sample: L1325778-02 Client ID: VAPOR OUTLET					
Vinyl chloride	2.94	3.02	ppbV	3	25
Bromomethane	ND	ND	ppbV	NC	25
Acetone	3.10	3.16	ppbV	2	25
1,1-Dichloroethene	0.026	0.026	ppbV	0	25
Methylene chloride	ND	ND	ppbV	NC	25
trans-1,2-Dichloroethene	5.14	5.25	ppbV	2	25
1,1-Dichloroethane	ND	ND	ppbV	NC	25
Methyl tert butyl ether	ND	ND	ppbV	NC	25
2-Butanone	ND	ND	ppbV	NC	25
cis-1,2-Dichloroethene	15.4	15.6	ppbV	1	25
Chloroform	0.129	0.136	ppbV	5	25
1,2-Dichloroethane	ND	ND	ppbV	NC	25
1,1,1-Trichloroethane	ND	ND	ppbV	NC	25
Benzene	0.117	0.117	ppbV	0	25
Carbon tetrachloride	ND	ND	ppbV	NC	25
1,2-Dichloropropane	ND	ND	ppbV	NC	25
Bromodichloromethane	ND	ND	ppbV	NC	25
1,4-Dioxane	ND	ND	ppbV	NC	25
Trichloroethene	ND	ND	ppbV	NC	25

Lab Duplicate Analysis
Batch Quality Control

Project Name: NBHS IRA PSWS
Project Number: 115058

Lab Number: L1325778
Report Date: 12/26/13

Parameter	Native Sample	Duplicate Sample	Units	RPD	RPD Limits
MCP Volatile Organics in Air by SIM - Mansfield Lab Associated sample(s): 02 QC Batch ID: WG660684-5 QC Sample: L1325778-02 Client ID: VAPOR OUTLET					
cis-1,3-Dichloropropene	ND	ND	ppbV	NC	25
4-Methyl-2-pentanone	ND	ND	ppbV	NC	25
trans-1,3-Dichloropropene	ND	ND	ppbV	NC	25
1,1,2-Trichloroethane	ND	ND	ppbV	NC	25
Toluene	0.620	0.618	ppbV	0	25
Dibromochloromethane	ND	ND	ppbV	NC	25
1,2-Dibromoethane	ND	ND	ppbV	NC	25
Tetrachloroethene	ND	ND	ppbV	NC	25
Chlorobenzene	ND	ND	ppbV	NC	25
Ethylbenzene	0.165	0.168	ppbV	2	25
p/m-Xylene	0.595	0.602	ppbV	1	25
Bromoform	ND	ND	ppbV	NC	25
Styrene	ND	ND	ppbV	NC	25
1,1,2,2-Tetrachloroethane	ND	ND	ppbV	NC	25
o-Xylene	0.205	0.210	ppbV	2	25
1,3-Dichlorobenzene	ND	ND	ppbV	NC	25
1,4-Dichlorobenzene	ND	ND	ppbV	NC	25
1,2-Dichlorobenzene	ND	ND	ppbV	NC	25
1,2,4-Trichlorobenzene	ND	ND	ppbV	NC	25

Lab Duplicate Analysis
Batch Quality Control

Project Name: NBHS IRA PSWS
Project Number: 115058

Lab Number: L1325778
Report Date: 12/26/13

Parameter	Native Sample	Duplicate Sample	Units	RPD	RPD Limits
MCP Volatile Organics in Air by SIM - Mansfield Lab Associated sample(s): 02 QC Batch ID: WG660684-5 QC Sample: L1325778-02 Client ID: VAPOR OUTLET					
Naphthalene	ND	ND	ppbV	NC	25
Hexachlorobutadiene	ND	ND	ppbV	NC	25

Project Name: NBHS IRA PSWS

Project Number: 115058

Lab Number: L1325778

Report Date: 12/26/13

Canister and Flow Controller Information

Samplenum	Client ID	Media ID	Media Type	Date Prepared	Bottle Order	Cleaning Batch ID	Can Leak Check	Initial Pressure (in. Hg)	Pressure on Receipt (in. Hg)	Flow Controler Leak Chk	Flow Out mL/min	Flow In mL/min	% RPD
L1325778-01	VAPOR INLET	0535	SV200	12/16/13	96888		-	-	-	Pass	218	221	1
L1325778-01	VAPOR INLET	481	2.7L Can	12/16/13	96888	L1325006-01	Pass	-29.6	-1.5	-	-	-	-
L1325778-02	VAPOR OUTLET	0518	SV200	12/16/13	96888		-	-	-	Pass	219	220	0
L1325778-02	VAPOR OUTLET	498	2.7L Can	12/16/13	96888	L1325006-01	Pass	-29.7	-1.9	-	-	-	-

Project Name: BATCH CANISTER CERTIFICATION
Project Number: CANISTER QC BAT

Lab Number: L1325006
Report Date: 12/26/13

Air Canister Certification Results

Lab ID: L1325006-01
Client ID: CAN 152 SHELF 19
Sample Location:
Matrix: Air
Anaytical Method: 48,TO-15
Analytical Date: 12/10/13 14:57
Analyst: RY

Date Collected: 12/09/13 16:54
Date Received: 12/10/13
Field Prep: Not Specified

Parameter	ppbV Results	ppbV RL	ppbV MDL	ug/m3 Results	ug/m3 RL	ug/m3 MDL	Qualifier	Dilution Factor
Volatile Organics in Air - Mansfield Lab								
Chlorodifluoromethane	ND	0.200	--	ND	0.707	--		1
Propylene	ND	0.500	--	ND	0.861	--		1
Propane	ND	0.500	--	ND	0.902	--		1
Dichlorodifluoromethane	ND	0.200	--	ND	0.989	--		1
Chloromethane	ND	0.200	--	ND	0.413	--		1
Freon-114	ND	0.200	--	ND	1.40	--		1
Methanol	ND	5.00	--	ND	6.55	--		1
Vinyl chloride	ND	0.200	--	ND	0.511	--		1
1,3-Butadiene	ND	0.200	--	ND	0.442	--		1
Butane	ND	0.200	--	ND	0.475	--		1
Bromomethane	ND	0.200	--	ND	0.777	--		1
Chloroethane	ND	0.200	--	ND	0.528	--		1
Ethanol	ND	2.50	--	ND	4.71	--		1
Dichlorofluoromethane	ND	0.200	--	ND	0.842	--		1
Vinyl bromide	ND	0.200	--	ND	0.874	--		1
Acrolein	ND	0.500	--	ND	1.15	--		1
Acetone	ND	1.00	--	ND	2.38	--		1
Acetonitrile	ND	0.200	--	ND	0.336	--		1
Trichlorofluoromethane	ND	0.200	--	ND	1.12	--		1
Isopropanol	ND	0.500	--	ND	1.23	--		1
Acrylonitrile	ND	0.200	--	ND	0.434	--		1
Pentane	ND	0.200	--	ND	0.590	--		1
Ethyl ether	ND	0.200	--	ND	0.606	--		1
1,1-Dichloroethene	ND	0.200	--	ND	0.793	--		1
Tertiary butyl Alcohol	ND	0.500	--	ND	1.52	--		1

Project Name: BATCH CANISTER CERTIFICATION **Lab Number:** L1325006

Project Number: CANISTER QC BAT **Report Date:** 12/26/13

Air Canister Certification Results

Lab ID: L1325006-01 Date Collected: 12/09/13 16:54

Client ID: CAN 152 SHELF 19 Date Received: 12/10/13

Sample Location: Field Prep: Not Specified

	ppbV			ug/m3				
Parameter	**Results**	**RL**	**MDL**	**Results**	**RL**	**MDL**	**Qualifier**	**Dilution Factor**
Volatile Organics in Air - Mansfield Lab								
Methylene chloride	ND	1.00	--	ND	3.47	--		1
3-Chloropropene	ND	0.200	--	ND	0.626	--		1
Carbon disulfide	ND	0.200	--	ND	0.623	--		1
Freon-113	ND	0.200	--	ND	1.53	--		1
trans-1,2-Dichloroethene	ND	0.200	--	ND	0.793	--		1
1,1-Dichloroethane	ND	0.200	--	ND	0.809	--		1
Methyl tert butyl ether	ND	0.200	--	ND	0.721	--		1
Vinyl acetate	ND	0.200	--	ND	0.704	--		1
2-Butanone	ND	0.200	--	ND	0.590	--		1
cis-1,2-Dichloroethene	ND	0.200	--	ND	0.793	--		1
Ethyl Acetate	ND	0.500	--	ND	1.80	--		1
Chloroform	ND	0.200	--	ND	0.977	--		1
Tetrahydrofuran	ND	0.200	--	ND	0.590	--		1
2,2-Dichloropropane	ND	0.200	--	ND	0.924	--		1
1,2-Dichloroethane	ND	0.200	--	ND	0.809	--		1
n-Hexane	ND	0.200	--	ND	0.705	--		1
Diisopropyl ether	ND	0.200	--	ND	0.836	--		1
tert-Butyl Ethyl Ether	ND	0.200	--	ND	0.836	--		1
1,1,1-Trichloroethane	ND	0.200	--	ND	1.09	--		1
1,1-Dichloropropene	ND	0.200	--	ND	0.908	--		1
Benzene	ND	0.200	--	ND	0.639	--		1
Carbon tetrachloride	ND	0.200	--	ND	1.26	--		1
Cyclohexane	ND	0.200	--	ND	0.688	--		1
tert-Amyl Methyl Ether	ND	0.200	--	ND	0.836	--		1
Dibromomethane	ND	0.200	--	ND	1.42	--		1
1,2-Dichloropropane	ND	0.200	--	ND	0.924	--		1
Bromodichloromethane	ND	0.200	--	ND	1.34	--		1
1,4-Dioxane	ND	0.200	--	ND	0.721	--		1

Project Name: BATCH CANISTER CERTIFICATION **Lab Number:** L1325006

Project Number: CANISTER QC BAT **Report Date:** 12/26/13

Air Canister Certification Results

Lab ID: L1325006-01 Date Collected: 12/09/13 16:54

Client ID: CAN 152 SHELF 19 Date Received: 12/10/13

Sample Location: Field Prep: Not Specified

	ppbV			ug/m3				
Parameter	**Results**	**RL**	**MDL**	**Results**	**RL**	**MDL**	**Qualifier**	**Dilution Factor**
Volatile Organics in Air - Mansfield Lab								
Trichloroethene	ND	0.200	--	ND	1.07	--		1
2,2,4-Trimethylpentane	ND	0.200	--	ND	0.934	--		1
Methyl Methacrylate	ND	0.500	--	ND	2.05	--		1
Heptane	ND	0.200	--	ND	0.820	--		1
cis-1,3-Dichloropropene	ND	0.200	--	ND	0.908	--		1
4-Methyl-2-pentanone	ND	0.200	--	ND	0.820	--		1
trans-1,3-Dichloropropene	ND	0.200	--	ND	0.908	--		1
1,1,2-Trichloroethane	ND	0.200	--	ND	1.09	--		1
Toluene	ND	0.200	--	ND	0.754	--		1
1,3-Dichloropropane	ND	0.200	--	ND	0.924	--		1
2-Hexanone	ND	0.200	--	ND	0.820	--		1
Dibromochloromethane	ND	0.200	--	ND	1.70	--		1
1,2-Dibromoethane	ND	0.200	--	ND	1.54	--		1
Butyl acetate	ND	0.500	--	ND	2.38	--		1
Octane	ND	0.200	--	ND	0.934	--		1
Tetrachloroethene	ND	0.200	--	ND	1.36	--		1
1,1,1,2-Tetrachloroethane	ND	0.200	--	ND	1.37	--		1
Chlorobenzene	ND	0.200	--	ND	0.921	--		1
Ethylbenzene	ND	0.200	--	ND	0.869	--		1
p/m-Xylene	ND	0.400	--	ND	1.74	--		1
Bromoform	ND	0.200	--	ND	2.07	--		1
Styrene	ND	0.200	--	ND	0.852	--		1
1,1,2,2-Tetrachloroethane	ND	0.200	--	ND	1.37	--		1
o-Xylene	ND	0.200	--	ND	0.869	--		1
1,2,3-Trichloropropane	ND	0.200	--	ND	1.21	--		1
Nonane	ND	0.200	--	ND	1.05	--		1
Isopropylbenzene	ND	0.200	--	ND	0.983	--		1
Bromobenzene	ND	0.200	--	ND	0.793	--		1

Project Name: BATCH CANISTER CERTIFICATION **Lab Number:** L1325006

Project Number: CANISTER QC BAT **Report Date:** 12/26/13

Air Canister Certification Results

Lab ID: L1325006-01 Date Collected: 12/09/13 16:54

Client ID: CAN 152 SHELF 19 Date Received: 12/10/13

Sample Location: Field Prep: Not Specified

	ppbV			ug/m3				
Parameter	**Results**	**RL**	**MDL**	**Results**	**RL**	**MDL**	**Qualifier**	**Dilution Factor**
Volatile Organics in Air - Mansfield Lab								
2-Chlorotoluene	ND	0.200	--	ND	1.04	--		1
n-Propylbenzene	ND	0.200	--	ND	0.983	--		1
4-Chlorotoluene	ND	0.200	--	ND	1.04	--		1
4-Ethyltoluene	ND	0.200	--	ND	0.983	--		1
1,3,5-Trimethylbenzene	ND	0.200	--	ND	0.983	--		1
tert-Butylbenzene	ND	0.200	--	ND	1.10	--		1
1,2,4-Trimethylbenzene	ND	0.200	--	ND	0.983	--		1
Decane	ND	0.200	--	ND	1.16	--		1
Benzyl chloride	ND	0.200	--	ND	1.04	--		1
1,3-Dichlorobenzene	ND	0.200	--	ND	1.20	--		1
1,4-Dichlorobenzene	ND	0.200	--	ND	1.20	--		1
sec-Butylbenzene	ND	0.200	--	ND	1.10	--		1
p-Isopropyltoluene	ND	0.200	--	ND	1.10	--		1
1,2-Dichlorobenzene	ND	0.200	--	ND	1.20	--		1
n-Butylbenzene	ND	0.200	--	ND	1.10	--		1
1,2-Dibromo-3-chloropropane	ND	0.200	--	ND	1.93	--		1
Undecane	ND	0.200	--	ND	1.28	--		1
Dodecane	ND	0.200	--	ND	1.39	--		1
1,2,4-Trichlorobenzene	ND	0.200	--	ND	1.48	--		1
Naphthalene	ND	0.200	--	ND	1.05	--		1
1,2,3-Trichlorobenzene	ND	0.200	--	ND	1.48	--		1
Hexachlorobutadiene	ND	0.200	--	ND	2.13	--		1

	Results	**Qualifier**	**Units**	**RDL**	**Dilution Factor**
Tentatively Identified Compounds					
No Tentatively Identified Compounds					

Project Name: BATCH CANISTER CERTIFICATION **Lab Number:** L1325006

Project Number: CANISTER QC BAT **Report Date:** 12/26/13

Air Canister Certification Results

Lab ID: L1325006-01 Date Collected: 12/09/13 16:54

Client ID: CAN 152 SHELF 19 Date Received: 12/10/13

Sample Location: Field Prep: Not Specified

	ppbV			ug/m3				
Parameter	**Results**	**RL**	**MDL**	**Results**	**RL**	**MDL**	**Qualifier**	**Dilution Factor**
Volatile Organics in Air - Mansfield Lab								

Internal Standard	**% Recovery**	**Qualifier**	**Acceptance Criteria**
1,4-Difluorobenzene	96		60-140
Bromochloromethane	108		60-140
chlorobenzene-d5	96		60-140

Project Name: BATCH CANISTER CERTIFICATION **Lab Number:** L1325006

Project Number: CANISTER QC BAT **Report Date:** 12/26/13

Air Canister Certification Results

Lab ID:	L1325006-01	Date Collected:	12/09/13 16:54
Client ID:	CAN 152 SHELF 19	Date Received:	12/10/13
Sample Location:		Field Prep:	Not Specified
Matrix:	Air		
Anaytical Method:	48,TO-15-SIM		
Analytical Date:	12/10/13 14:57		
Analyst:	RY		

	ppbV			ug/m3				
Parameter	**Results**	**RL**	**MDL**	**Results**	**RL**	**MDL**	**Qualifier**	**Dilution Factor**
Volatile Organics in Air by SIM - Mansfield Lab								
Dichlorodifluoromethane	ND	0.050	--	ND	0.247	--		1
Chloromethane	ND	0.500	--	ND	1.03	--		1
Freon-114	ND	0.050	--	ND	0.349	--		1
Vinyl chloride	ND	0.020	--	ND	0.051	--		1
1,3-Butadiene	ND	0.020	--	ND	0.044	--		1
Bromomethane	ND	0.020	--	ND	0.078	--		1
Chloroethane	ND	0.020	--	ND	0.053	--		1
Acetone	ND	2.00	--	ND	4.75	--		1
Trichlorofluoromethane	ND	0.050	--	ND	0.281	--		1
Acrylonitrile	ND	0.500	--	ND	1.09	--		1
1,1-Dichloroethene	ND	0.020	--	ND	0.079	--		1
Methylene chloride	ND	1.00	--	ND	3.47	--		1
Freon-113	ND	0.050	--	ND	0.383	--		1
Halothane	ND	0.050	--	ND	0.404	--		1
trans-1,2-Dichloroethene	ND	0.020	--	ND	0.079	--		1
1,1-Dichloroethane	ND	0.020	--	ND	0.081	--		1
Methyl tert butyl ether	ND	0.020	--	ND	0.072	--		1
2-Butanone	ND	0.500	--	ND	1.47	--		1
cis-1,2-Dichloroethene	ND	0.020	--	ND	0.079	--		1
Chloroform	ND	0.020	--	ND	0.098	--		1
1,2-Dichloroethane	ND	0.020	--	ND	0.081	--		1
1,1,1-Trichloroethane	ND	0.020	--	ND	0.109	--		1
Benzene	ND	0.100	--	ND	0.319	--		1
Carbon tetrachloride	ND	0.020	--	ND	0.126	--		1
1,2-Dichloropropane	ND	0.020	--	ND	0.092	--		1

Project Name: BATCH CANISTER CERTIFICATION **Lab Number:** L1325006

Project Number: CANISTER QC BAT **Report Date:** 12/26/13

Air Canister Certification Results

Lab ID: L1325006-01 Date Collected: 12/09/13 16:54

Client ID: CAN 152 SHELF 19 Date Received: 12/10/13

Sample Location: Field Prep: Not Specified

	ppbV			ug/m3				
Parameter	**Results**	**RL**	**MDL**	**Results**	**RL**	**MDL**	**Qualifier**	**Dilution Factor**
Volatile Organics in Air by SIM - Mansfield Lab								
Bromodichloromethane	ND	0.020	--	ND	0.134	--		1
1,4-Dioxane	ND	0.100	--	ND	0.360	--		1
Trichloroethene	ND	0.020	--	ND	0.107	--		1
cis-1,3-Dichloropropene	ND	0.020	--	ND	0.091	--		1
4-Methyl-2-pentanone	ND	0.500	--	ND	2.05	--		1
trans-1,3-Dichloropropene	ND	0.020	--	ND	0.091	--		1
1,1,2-Trichloroethane	ND	0.020	--	ND	0.109	--		1
Toluene	ND	0.050	--	ND	0.188	--		1
Dibromochloromethane	ND	0.020	--	ND	0.170	--		1
1,2-Dibromoethane	ND	0.020	--	ND	0.154	--		1
Tetrachloroethene	ND	0.020	--	ND	0.136	--		1
1,1,1,2-Tetrachloroethane	ND	0.020	--	ND	0.137	--		1
Chlorobenzene	ND	0.020	--	ND	0.092	--		1
Ethylbenzene	ND	0.020	--	ND	0.087	--		1
p/m-Xylene	ND	0.040	--	ND	0.174	--		1
Bromoform	ND	0.020	--	ND	0.207	--		1
Styrene	ND	0.020	--	ND	0.085	--		1
1,1,2,2-Tetrachloroethane	ND	0.020	--	ND	0.137	--		1
o-Xylene	ND	0.020	--	ND	0.087	--		1
Isopropylbenzene	ND	0.500	--	ND	2.46	--		1
4-Ethyltoluene	ND	0.020	--	ND	0.098	--		1
1,3,5-Trimethybenzene	ND	0.020	--	ND	0.098	--		1
1,2,4-Trimethylbenzene	ND	0.020	--	ND	0.098	--		1
1,3-Dichlorobenzene	ND	0.020	--	ND	0.120	--		1
1,4-Dichlorobenzene	ND	0.020	--	ND	0.120	--		1
sec-Butylbenzene	ND	0.500	--	ND	2.74	--		1
p-Isopropyltoluene	ND	0.500	--	ND	2.74	--		1
1,2-Dichlorobenzene	ND	0.020	--	ND	0.120	--		1

Project Name: BATCH CANISTER CERTIFICATION **Lab Number:** L1325006

Project Number: CANISTER QC BAT **Report Date:** 12/26/13

Air Canister Certification Results

Lab ID: L1325006-01 Date Collected: 12/09/13 16:54

Client ID: CAN 152 SHELF 19 Date Received: 12/10/13

Sample Location: Field Prep: Not Specified

	ppbV			ug/m3				
Parameter	**Results**	**RL**	**MDL**	**Results**	**RL**	**MDL**	**Qualifier**	**Dilution Factor**
Volatile Organics in Air by SIM - Mansfield Lab								
n-Butylbenzene	ND	0.500	--	ND	2.74	--		1
1,2,4-Trichlorobenzene	ND	0.050	--	ND	0.371	--		1
Naphthalene	ND	0.050	--	ND	0.262	--		1
1,2,3-Trichlorobenzene	ND	0.050	--	ND	0.371	--		1
Hexachlorobutadiene	ND	0.050	--	ND	0.533	--		1

Internal Standard	**% Recovery**	**Qualifier**	**Acceptance Criteria**
1,4-difluorobenzene	96		60-140
bromochloromethane	98		60-140
chlorobenzene-d5	99		60-140

Project Name: NBHS IRA PSWS
Project Number: 115058

Lab Number: L1325778
Report Date: 12/26/13

Sample Receipt and Container Information

Were project specific reporting limits specified? YES

Reagent H2O Preserved Vials Frozen on: NA

Cooler Information **Custody Seal**

Cooler	
N/A	Absent

Container Information

Container ID	Container Type	Cooler	pH	Temp deg C	Pres	Seal	Analysis(*)
L1325778-01A	Canister - 2.7 Liter	N/A	N/A		Y	Absent	MCP-TO15(30)
L1325778-02A	Canister - 2.7 Liter	N/A	N/A		Y	Absent	MCP-TO15-SIM(30)

*Values in parentheses indicate holding time in days

Project Name:	NBHS IRA PSWS	**Lab Number:**	L1325778
Project Number:	115058	**Report Date:**	12/26/13

GLOSSARY

Acronyms

EDL	- Estimated Detection Limit: This value represents the level to which target analyte concentrations are reported as estimated values, when those target analyte concentrations are quantified below the reporting limit (RL). The EDL includes any adjustments from dilutions, concentrations or moisture content, where applicable. The use of EDLs is specific to the analysis of PAHs using Solid-Phase Microextraction (SPME).
EPA	- Environmental Protection Agency.
LCS	- Laboratory Control Sample: A sample matrix, free from the analytes of interest, spiked with verified known amounts of analytes or a material containing known and verified amounts of analytes.
LCSD	- Laboratory Control Sample Duplicate: Refer to LCS.
LFB	- Laboratory Fortified Blank: A sample matrix, free from the analytes of interest, spiked with verified known amounts of analytes or a material containing known and verified amounts of analytes.
MDL	- Method Detection Limit: This value represents the level to which target analyte concentrations are reported as estimated values, when those target analyte concentrations are quantified below the reporting limit (RL). The MDL includes any adjustments from dilutions, concentrations or moisture content, where applicable.
MS	- Matrix Spike Sample: A sample prepared by adding a known mass of target analyte to a specified amount of matrix sample for which an independent estimate of target analyte concentration is available.
MSD	- Matrix Spike Sample Duplicate: Refer to MS.
NA	- Not Applicable.
NC	- Not Calculated: Term is utilized when one or more of the results utilized in the calculation are non-detect at the parameter's reporting unit.
NI	- Not Ignitable.
RL	- Reporting Limit: The value at which an instrument can accurately measure an analyte at a specific concentration. The RL includes any adjustments from dilutions, concentrations or moisture content, where applicable.
RPD	- Relative Percent Difference: The results from matrix and/or matrix spike duplicates are primarily designed to assess the precision of analytical results in a given matrix and are expressed as relative percent difference (RPD). Values which are less than five times the reporting limit for any individual parameter are evaluated by utilizing the absolute difference between the values; although the RPD value will be provided in the report.
SRM	- Standard Reference Material: A reference sample of a known or certified value that is of the same or similar matrix as the associated field samples.

Footnotes

1	- The reference for this analyte should be considered modified since this analyte is absent from the target analyte list of the original method.

Terms

Analytical Method: Both the document from which the method originates and the analytical reference method. (Example: EPA 8260B is shown as 1,8260B.) The codes for the reference method documents are provided in the References section of the Addendum.

Data Qualifiers

A	- Spectra identified as "Aldol Condensation Product".
B	- The analyte was detected above the reporting limit in the associated method blank. Flag only applies to associated field samples that have detectable concentrations of the analyte at less than ten times (10x) the concentration found in the blank. For MCP-related projects, flag only applies to associated field samples that have detectable concentrations of the analyte at less than ten times (10x) the concentration found in the blank. For DOD-related projects, flag only applies to associated field samples that have detectable concentrations of the analyte at less than ten times (10x) the concentration found in the blank AND the analyte was detected above one-half the reporting limit (or above the reporting limit for common lab contaminants) in the associated method blank. For NJ-Air-related projects, flag only applies to associated field samples that have detectable concentrations of the analyte above the reporting limit.
C	- Co-elution: The target analyte co-elutes with a known lab standard (i.e. surrogate, internal standards, etc.) for co-extracted analyses.
D	- Concentration of analyte was quantified from diluted analysis. Flag only applies to field samples that have detectable concentrations of the analyte.
E	- Concentration of analyte exceeds the range of the calibration curve and/or linear range of the instrument.
G	- The concentration may be biased high due to matrix interferences (i.e, co-elution) with non-target compound(s). The result should be considered estimated.
H	- The analysis of pH was performed beyond the regulatory-required holding time of 15 minutes from the time of sample collection.
I	- The lower value for the two columns has been reported due to obvious interference.

Report Format: Data Usability Report

Project Name:	NBHS IRA PSWS	**Lab Number:**	L1325778
Project Number:	115058	**Report Date:**	12/26/13

Data Qualifiers

M - Reporting Limit (RL) exceeds the MCP CAM Reporting Limit for this analyte.

NJ - Presumptive evidence of compound. This represents an estimated concentration for Tentatively Identified Compounds (TICs), where the identification is based on a mass spectral library search.

P - The RPD between the results for the two columns exceeds the method-specified criteria.

Q - The quality control sample exceeds the associated acceptance criteria. For DOD-related projects, LCS and/or Continuing Calibration Standard exceedences are also qualified on all associated sample results. Note: This flag is not applicable for matrix spike recoveries when the sample concentration is greater than 4x the spike added or for batch duplicate RPD when the sample concentrations are less than 5x the RL. (Metals only.)

R - Analytical results are from sample re-analysis.

RE - Analytical results are from sample re-extraction.

S - Analytical results are from modified screening analysis.

Report Format: Data Usability Report

Project Name:	NBHS IRA PSWS	**Lab Number:**	L1325778
Project Number:	115058	**Report Date:**	12/26/13

REFERENCES

101 Compendium of Methods for the Determination of Toxic Organic Compounds in Ambient Air (EPA/625/R-96/010b:January 1999) with QC Requirements & Performance Standards for the Analysis of TO-15 under the Massachusetts Contingency Plan, WSC-CAM-IXB, July 2010.

LIMITATION OF LIABILITIES

Alpha Analytical performs services with reasonable care and diligence normal to the analytical testing laboratory industry. In the event of an error, the sole and exclusive responsibility of Alpha Analytical shall be to re-perform the work at it's own expense. In no event shall Alpha Analytical be held liable for any incidental, consequential or special damages, including but not limited to, damages in any way connected with the use of, interpretation of, information or analysis provided by Alpha Analytical.

We strongly urge our clients to comply with EPA protocol regarding sample volume, preservation, cooling, containers, sampling procedures, holding time and splitting of samples in the field.

Certification Information

Last revised December 11, 2013

The following analytes are not included in our NELAP Scope of Accreditation:

Westborough Facility
EPA 524.2: Acetone, 2-Butanone (Methyl ethyl ketone (MEK)), Tert-butyl alcohol, 2-Hexanone, Tetrahydrofuran, 1,3,5-Trichlorobenzene, 4-Methyl-2-pentanone (MIBK), Carbon disulfide, Diethyl ether.
EPA 8260C: 1,2,4,5-Tetramethylbenzene, 4-Ethyltoluene, Iodomethane (methyl iodide), Methyl methacrylate, Azobenzene.
EPA 8330A/B: PETN, Picric Acid, Nitroglycerine, 2,6-DANT, 2,4-DANT.
EPA 8270D: 1-Methylnaphthalene, Dimethylnaphthalene,1,4-Diphenylhydrazine.
EPA 625: 4-Chloroaniline, 4-Methylphenol.
SM4500: Soil: Total Phosphorus, TKN, NO2, NO3.
EPA 9071: Total Petroleum Hydrocarbons, Oil & Grease.

Mansfield Facility
EPA 8270D: Biphenyl.
EPA TO-15: Halothane, 2,4,4-Trimethyl-2-pentene, 2,4,4-Trimethyl-1-pentene, Thiophene, 2-Methylthiophene, 3-Methylthiophene, 2-Ethylthiophene, 1,2,3-Trimethylbenzene, Indan, Indene, 1,2,4,5-Tetramethylbenzene, Benzothiophene, 1-Methylnaphthalene.

The following analytes are included in our Massachusetts DEP Scope of Accreditation, Westborough Facility:

Drinking Water
EPA 200.8: Sb,As,Ba,Be,Cd,Cr,Cu,Pb,Ni,Se,Tl; **EPA 200.7**: Ba,Be,Ca,Cd,Cr,Cu,Na; **EPA 245.1:** Mercury;
EPA 300.0: Nitrate-N, Fluoride, Sulfate; **EPA 353.2**: Nitrate-N, Nitrite-N; **SM4500NO3-F**: Nitrate-N, Nitrite-N; **SM4500F-C, SM4500CN-CE, EPA 180.1, SM2130B, SM4500Cl-D, SM2320B, SM2540C, SM4500H-B**
EPA 332: Perchlorate.
Microbiology: **SM9215B; SM9223-P/A, SM9223B-Colilert-QT, Enterolert-QT.**

Non-Potable Water
EPA 200.8: Al,Sb,As,Be,Cd,Cr,Cu,Pb,Mn,Ni,Se,Ag,Tl,Zn;
EPA 200.7: Al,Sb,As,Be,Cd,Ca,Cr,Co,Cu,Fe,Pb,Mg,Mn,Mo,Ni,K,Se,Ag,Na,Sr,Ti,Tl,V,Zn;
EPA 245.1, SM4500H,B, EPA 120.1, SM2510B, SM2540C, SM2340B, SM2320B, SM4500CL-E, SM4500F-BC, SM426C, SM4500NH3-BH, **EPA 350.1**: Ammonia-N, **LACHAT 10-107-06-1-B**: Ammonia-N, **SM4500NO3-F,**
EPA 353.2: Nitrate-N**, SM4500NH3-BC-NES, EPA 351.1, SM4500P-E, SM4500P-B, E, SM5220D, EPA 410.4, SM5210B, SM5310C, SM4500CL-D, EPA 1664, SM14 510AC, EPA 420.1, SM4500-CN-CE, SM2540D.**
EPA 624: Volatile Halocarbons & Aromatics,
EPA 608: Chlordane, Toxaphene, Aldrin, alpha-BHC, beta-BHC, gamma-BHC, delta-BHC, Dieldrin, DDD, DDE, DDT, Endosulfan I, Endosulfan II, Endosulfan sulfate, Endrin, Endrin Aldehyde, Heptachlor, Heptachlor Epoxide, PCBs
EPA 625: SVOC (Acid/Base/Neutral Extractables), **EPA 600/4-81-045**: PCB-Oil.
Microbiology: **SM9223B-Colilert-QT; Enterolert-QT, SM9222D-MF**.

For a complete listing of analytes and methods, please contact your Alpha Project Manager.

AIR ANALYSIS

PAGE 1 OF 1

CHAIN OF CUSTODY

ALPHA ANALYTICAL
320 Forbes Blvd, Mansfield, MA 02048
TEL: 508-822-9300 FAX: 508-822-3288

Date Rec'd in Lab:

ALPHA Job #: L1325778

Client Information

Client: TRC
Address: 650 Suffolk St.
Lowell, MA 01854
Phone: 978-970-5600
Fax:
Email: aleonard dsullivan@trcsolutions.com
☐ These samples have been previously analyzed by Alpha

Project Information

Project Name: NBHS IRA PSWS
Project Location: New Bedford, MA
Project #: 115058
Project Manager: David Sullivan
ALPHA Quote #:

Turn-Around Time

☒ Standard ☐ RUSH (only confirmed if pre-approved!)
Date Due: 5-day Time:

Report Information - Data Deliverables

☐ FAX
☐ ADEx
Criteria Checker:
(Default based on Regulatory Criteria Indicated)
Other Formats:
☒ EMAIL (standard pdf report)
☐ Additional Deliverables:
Report to: (if different than Project Manager)

Billing Information

☐ Same as Client info PO #: C115058

Regulatory Requirements/Report Limits

State/Fed	Program	Criteria
MA	MCP	

Other Project Specific Requirements/Comments:

All Columns Below Must Be Filled Out

ANALYSIS

ALPHA Lab ID (Lab Use Only)	Sample ID	Collection Date	Start Time	End Time	Initial Vacuum	Final Vacuum	Sample Matrix*	Sampler's Initials	Can Size	I D Can	I D - Flow Controller	TO-14A by TO-15	TO-15	TO-15 SIM	APH	FIXED GASES	TO-13A	TO-4 / TO-10	Sample Comments (i.e. PID)
25778-01	VAPOR INLET	12/17/13	1129	1142	-30.04	-2.00	SV	KDJ	2.7L	481	0535		X						
02	VAPOR OUTLET	12/17/13	1140	1152	-30.05	-2.64	SV	KDJ	2.7L	498	0518			X					
Container Type													CS	CS					

*SAMPLE MATRIX CODES
AA = Ambient Air (Indoor/Outdoor)
SV = Soil Vapor/Landfill Gas/SVE
Other = Please Specify

Relinquished By:	Date/Time	Received By:	Date/Time:
Kevin Jordan	12/18/13 10:22	Don Bayes	12.18.13 1022
[illegible]	12/19/13 03:00	Mansfield Lab	12/19/13 03:00

Please print clearly, legibly and completely. Samples can not be logged in and turnaround time clock will not start until any ambiguities are resolved. BY EXECUTING THIS COC, THE CLIENT HAS READ AND AGREES TO BE BOUND BY ALPHA'S TERMS & CONDITIONS. (See reverse side.)

Form No: 101-02 (19-Jun-09)

ANALYTICAL REPORT

Lab Number:	L1401597
Client:	TRC Environmental Consultants Wannalancit Mills 650 Suffolk Street Lowell, MA 01854
ATTN:	David Sullivan
Phone:	(978) 656-3565
Project Name:	NBHS IRA PSWS
Project Number:	115058
Report Date:	01/29/14

The original project report/data package is held by Alpha Analytical. This report/data package is paginated and should be reproduced only in its entirety. Alpha Analytical holds no responsibility for results and/or data that are not consistent with the original.

Certifications & Approvals: NY (11627), CT (PH-0141), NH (2206), NJ NELAP (MA015), RI (LAO00299), PA (68-02089), LA NELAP (03090), FL (E87814), TX (T104704419), WA (C954), DOD (L2217.01), USDA (Permit #P330-11-00109), US Army Corps of Engineers.

320 Forbes Boulevard, Mansfield, MA 02048-1806
508-822-9300 (Fax) 508-822-3288 800-624-9220 - www.alphalab.com

Project Name: NBHS IRA PSWS
Project Number: 115058

Lab Number: L1401597
Report Date: 01/29/14

Alpha Sample ID	Client ID	Sample Location	Collection Date/Time
L1401597-01	VAPOR INLET	NEW BEDFORD, MA	01/16/14 13:13
L1401597-02	VAPOR OUTLET	NEW BEDFORD, MA	01/16/14 13:18

Project Name: NBHS IRA PSWS **Lab Number:** L1401597
Project Number: 115058 **Report Date:** 01/29/14

Case Narrative

The samples were received in accordance with the Chain of Custody and no significant deviations were encountered during the preparation or analysis unless otherwise noted. Sample Receipt, Container Information, and the Chain of Custody are located at the back of the report.

Results contained within this report relate only to the samples submitted under this Alpha Lab Number and meet all of the requirements of NELAC, for all NELAC accredited parameters. The data presented in this report is organized by parameter (i.e. VOC, SVOC, etc.). Sample specific Quality Control data (i.e. Surrogate Spike Recovery) is reported at the end of the target analyte list for each individual sample, followed by the Laboratory Batch Quality Control at the end of each parameter. If a sample was re-analyzed or re-extracted due to a required quality control corrective action and if both sets of data are reported, the Laboratory ID of the re-analysis or re-extraction is designated with an "R" or "RE", respectively. When multiple Batch Quality Control elements are reported (e.g. more than one LCS), the associated samples for each element are noted in the grey shaded header line of each data table. Any Laboratory Batch, Sample Specific % recovery or RPD value that is outside the listed Acceptance Criteria is bolded in the report. Performance criteria for CAM and RCP methods allow for some LCS compound failures to occur and still be within method compliance. In these instances, the specific failures are not narrated but are noted in the associated QC table. This information is also incorporated in the Data Usability format for our Data Merger tool where it can be reviewed along with any associated usability implications. Soil/sediments, solids and tissues are reported on a dry weight basis unless otherwise noted. Definitions of all data qualifiers and acronyms used in this report are provided in the Glossary located at the back of the report.

In reference to questions H (CAM) or 4 (RCP) when "NO" is checked, the performance criteria for CAM and RCP methods allow for some quality control failures to occur and still be within method compliance. In these instances the specific failure is not narrated but noted in the associated QC table. The information is also incorporated in the Data Usability format of our Data Merger tool where it can be reviewed along with any associated usability implications.

Please see the associated ADEx data file for a comparison of laboratory reporting limits that were achieved with the regulatory Numerical Standards requested on the Chain of Custody.

HOLD POLICY
For samples submitted on hold, Alpha's policy is to hold samples (with the exception of Air canisters) free of charge for 21 calendar days from the date the project is completed. After 21 calendar days, we will dispose of all samples submitted including those put on hold unless you have contacted your Client Service Representative and made arrangements for Alpha to continue to hold the samples. Air canisters will be disposed after 3 business days from the date the project is completed.

Please contact Client Services at 800-624-9220 with any questions.

Project Name: NBHS IRA PSWS **Lab Number:** L1401597
Project Number: 115058 **Report Date:** 01/29/14

Case Narrative (continued)

PCBs in Air

The surrogate recovery for Decachlorobiphenyl, in samples L1401597-01 and -02, were outside of the acceptance criteria at 33% and 33% for the Rtx-5 column only. The samples were re-analyzed with the re-analysis exhibiting the same results. The samples were consumed during the initial extraction; therefore re-extraction could not be performed. No further corrective action was taken.

The results in ug/m3 are attached as an addendum to the end of the summary report.

I, the undersigned, attest under the pains and penalties of perjury that, to the best of my knowledge and belief and based upon my personal inquiry of those responsible for providing the information contained in this analytical report, such information is accurate and complete. This certificate of analysis is not complete unless this page accompanies any and all pages of this report.

Authorized Signature: Elizabeth Porta

Title: Technical Director/Representative Date: 01/29/14

AIR

Project Name: NBHS IRA PSWS **Lab Number:** L1401597

Project Number: 115058 **Report Date:** 01/29/14

SAMPLE RESULTS

Lab ID:	L1401597-01	Date Collected:	01/16/14 13:13
Client ID:	VAPOR INLET	Date Received:	01/16/14
Sample Location:	NEW BEDFORD, MA	Field Prep:	Not Specified
Matrix:	Air Media	Extraction Method:	EPA 3540C
Analytical Method:	48,TO-10A	Extraction Date:	01/20/14 11:30
Analytical Date:	01/23/14 23:37		
Analyst:	JS		

Parameter	Result	Qualifier	Units	RL	MDL	Dilution Factor	Column
PCB Aroclors in Air - Mansfield Lab							
Aroclor 1016	ND		ng/cart	30.0	--	1	A
Aroclor 1221	ND		ng/cart	100	--	1	A
Aroclor 1232	ND		ng/cart	30.0	--	1	A
Aroclor 1242	106		ng/cart	20.0	--	1	B
Aroclor 1248	ND		ng/cart	20.0	--	1	A
Aroclor 1254	61.2		ng/cart	20.0	--	1	A
Aroclor 1260	ND		ng/cart	20.0	--	1	A
Aroclor 1262	ND		ng/cart	20.0	--	1	A
Aroclor 1268	ND		ng/cart	20.0	--	1	A

Surrogate	% Recovery	Qualifier	Acceptance Criteria	Column
Tetrachloro-meta-Xylene	73		60-120	A
Decachlorobiphenyl	**33**	Q	60-120	A
Tetrachloro-meta-Xylene	73		60-120	B
Decachlorobiphenyl	63		60-120	B

Project Name: NBHS IRA PSWS **Lab Number:** L1401597

Project Number: 115058 **Report Date:** 01/29/14

SAMPLE RESULTS

Lab ID:	L1401597-02	Date Collected:	01/16/14 13:18
Client ID:	VAPOR OUTLET	Date Received:	01/16/14
Sample Location:	NEW BEDFORD, MA	Field Prep:	Not Specified
Matrix:	Air Media	Extraction Method:	EPA 3540C
Analytical Method:	48,TO-10A	Extraction Date:	01/20/14 11:30
Analytical Date:	01/24/14 00:07		
Analyst:	JS		

Parameter	Result	Qualifier	Units	RL	MDL	Dilution Factor	Column
PCB Aroclors in Air - Mansfield Lab							
Aroclor 1016	ND		ng/cart	30.0	--	1	A
Aroclor 1221	ND		ng/cart	100	--	1	A
Aroclor 1232	ND		ng/cart	30.0	--	1	A
Aroclor 1242	ND		ng/cart	20.0	--	1	A
Aroclor 1248	ND		ng/cart	20.0	--	1	A
Aroclor 1254	ND		ng/cart	20.0	--	1	A
Aroclor 1260	ND		ng/cart	20.0	--	1	A
Aroclor 1262	ND		ng/cart	20.0	--	1	A
Aroclor 1268	ND		ng/cart	20.0	--	1	A

Surrogate	% Recovery	Qualifier	Acceptance Criteria	Column
Tetrachloro-meta-Xylene	71		60-120	A
Decachlorobiphenyl	**33**	Q	60-120	A
Tetrachloro-meta-Xylene	70		60-120	B
Decachlorobiphenyl	61		60-120	B

Project Name: NBHS IRA PSWS
Project Number: 115058

Lab Number: L1401597
Report Date: 01/29/14

Method Blank Analysis
Batch Quality Control

Analytical Method: 48,TO-10A
Analytical Date: 01/23/14 22:37
Analyst: JS

Extraction Method: EPA 3540C
Extraction Date: 01/20/14 11:30

Parameter	Result	Qualifier	Units	RL	MDL	Column
PCB Aroclors in Air - Mansfield Lab for sample(s): 01-02 Batch: WG665713-1						
Aroclor 1016	ND		ng/cart	30.0	--	A
Aroclor 1221	ND		ng/cart	100	--	A
Aroclor 1232	ND		ng/cart	30.0	--	A
Aroclor 1242	ND		ng/cart	20.0	--	A
Aroclor 1248	ND		ng/cart	20.0	--	A
Aroclor 1254	ND		ng/cart	20.0	--	A
Aroclor 1260	ND		ng/cart	20.0	--	A
Aroclor 1262	ND		ng/cart	20.0	--	A
Aroclor 1268	ND		ng/cart	20.0	--	A

Surrogate	%Recovery	Qualifier	Acceptance Criteria	Column
Tetrachloro-meta-Xylene	74		60-120	A
Decachlorobiphenyl	65		60-120	A
Tetrachloro-meta-Xylene	68		60-120	B
Decachlorobiphenyl	60		60-120	B

Lab Control Sample Analysis
Batch Quality Control

Project Name: NBHS IRA PSWS
Project Number: 115058

Lab Number: L1401597
Report Date: 01/29/14

Parameter	LCS %Recovery	Qual	LCSD %Recovery	Qual	%Recovery Limits	RPD	Qual	RPD Limits	Column
PCB Aroclors in Air - Mansfield Lab Associated sample(s): 01-02 Batch: WG665713-2									
Aroclor 1016	67		-		40-140	-		50	A
Aroclor 1260	86		-		40-140	-		50	A

Surrogate	LCS %Recovery	Qual	LCSD %Recovery	Qual	Acceptance Criteria	Column
Tetrachloro-meta-Xylene	79				60-120	A
Decachlorobiphenyl	70				60-120	A
Tetrachloro-meta-Xylene	80				60-120	B
Decachlorobiphenyl	68				60-120	B

Project Name: NBHS IRA PSWS
Project Number: 115058

Lab Number: L1401597
Report Date: 01/29/14

Sample Receipt and Container Information

Were project specific reporting limits specified? YES

Reagent H2O Preserved Vials Frozen on: NA

Cooler Information Custody Seal

Cooler	
A	Absent

Container Information

Container ID	Container Type	Cooler	pH	Temp deg C	Pres	Seal	Analysis(*)
L1401597-01A	PUF Air Cartridge - High or Low	A	N/A		Y	Absent	A2-TO10-AROCLOR(7)
L1401597-02A	PUF Air Cartridge - High or Low	A	N/A		Y	Absent	A2-TO10-AROCLOR(7)

*Values in parentheses indicate holding time in days

Project Name:	NBHS IRA PSWS	**Lab Number:**	L1401597
Project Number:	115058	**Report Date:**	01/29/14

GLOSSARY

Acronyms

EDL	- Estimated Detection Limit: This value represents the level to which target analyte concentrations are reported as estimated values, when those target analyte concentrations are quantified below the reporting limit (RL). The EDL includes any adjustments from dilutions, concentrations or moisture content, where applicable. The use of EDLs is specific to the analysis of PAHs using Solid-Phase Microextraction (SPME).
EPA	- Environmental Protection Agency.
LCS	- Laboratory Control Sample: A sample matrix, free from the analytes of interest, spiked with verified known amounts of analytes or a material containing known and verified amounts of analytes.
LCSD	- Laboratory Control Sample Duplicate: Refer to LCS.
LFB	- Laboratory Fortified Blank: A sample matrix, free from the analytes of interest, spiked with verified known amounts of analytes or a material containing known and verified amounts of analytes.
MDL	- Method Detection Limit: This value represents the level to which target analyte concentrations are reported as estimated values, when those target analyte concentrations are quantified below the reporting limit (RL). The MDL includes any adjustments from dilutions, concentrations or moisture content, where applicable.
MS	- Matrix Spike Sample: A sample prepared by adding a known mass of target analyte to a specified amount of matrix sample for which an independent estimate of target analyte concentration is available.
MSD	- Matrix Spike Sample Duplicate: Refer to MS.
NA	- Not Applicable.
NC	- Not Calculated: Term is utilized when one or more of the results utilized in the calculation are non-detect at the parameter's reporting unit.
NI	- Not Ignitable.
RL	- Reporting Limit: The value at which an instrument can accurately measure an analyte at a specific concentration. The RL includes any adjustments from dilutions, concentrations or moisture content, where applicable.
RPD	- Relative Percent Difference: The results from matrix and/or matrix spike duplicates are primarily designed to assess the precision of analytical results in a given matrix and are expressed as relative percent difference (RPD). Values which are less than five times the reporting limit for any individual parameter are evaluated by utilizing the absolute difference between the values; although the RPD value will be provided in the report.
SRM	- Standard Reference Material: A reference sample of a known or certified value that is of the same or similar matrix as the associated field samples.

Footnotes

1	- The reference for this analyte should be considered modified since this analyte is absent from the target analyte list of the original method.

Terms

Analytical Method: Both the document from which the method originates and the analytical reference method. (Example: EPA 8260B is shown as 1,8260B.) The codes for the reference method documents are provided in the References section of the Addendum.

Data Qualifiers

A	- Spectra identified as "Aldol Condensation Product".
B	- The analyte was detected above the reporting limit in the associated method blank. Flag only applies to associated field samples that have detectable concentrations of the analyte at less than ten times (10x) the concentration found in the blank. For MCP-related projects, flag only applies to associated field samples that have detectable concentrations of the analyte at less than ten times (10x) the concentration found in the blank. For DOD-related projects, flag only applies to associated field samples that have detectable concentrations of the analyte at less than ten times (10x) the concentration found in the blank AND the analyte was detected above one-half the reporting limit (or above the reporting limit for common lab contaminants) in the associated method blank. For NJ-Air-related projects, flag only applies to associated field samples that have detectable concentrations of the analyte above the reporting limit.
C	- Co-elution: The target analyte co-elutes with a known lab standard (i.e. surrogate, internal standards, etc.) for co-extracted analyses.
D	- Concentration of analyte was quantified from diluted analysis. Flag only applies to field samples that have detectable concentrations of the analyte.
E	- Concentration of analyte exceeds the range of the calibration curve and/or linear range of the instrument.
G	- The concentration may be biased high due to matrix interferences (i.e, co-elution) with non-target compound(s). The result should be considered estimated.
H	- The analysis of pH was performed beyond the regulatory-required holding time of 15 minutes from the time of sample collection.
I	- The lower value for the two columns has been reported due to obvious interference.

Report Format: Data Usability Report

Project Name:	NBHS IRA PSWS	**Lab Number:**	L1401597
Project Number:	115058	**Report Date:**	01/29/14

Data Qualifiers

M - Reporting Limit (RL) exceeds the MCP CAM Reporting Limit for this analyte.

NJ - Presumptive evidence of compound. This represents an estimated concentration for Tentatively Identified Compounds (TICs), where the identification is based on a mass spectral library search.

P - The RPD between the results for the two columns exceeds the method-specified criteria.

Q - The quality control sample exceeds the associated acceptance criteria. For DOD-related projects, LCS and/or Continuing Calibration Standard exceedences are also qualified on all associated sample results. Note: This flag is not applicable for matrix spike recoveries when the sample concentration is greater than 4x the spike added or for batch duplicate RPD when the sample concentrations are less than 5x the RL. (Metals only.)

R - Analytical results are from sample re-analysis.

RE - Analytical results are from sample re-extraction.

S - Analytical results are from modified screening analysis.

J - Estimated value. This represents an estimated concentration for Tentatively Identified Compounds (TICs).

ND - Not detected at the reporting limit (RL) for the sample.

Report Format: Data Usability Report

REFERENCES

48 Compendium of Methods for the Determination of Toxic Organic Compounds in Ambient Air. Second Edition. EPA/625/R-96/010b, January 1999.

LIMITATION OF LIABILITIES

Alpha Analytical performs services with reasonable care and diligence normal to the analytical testing laboratory industry. In the event of an error, the sole and exclusive responsibility of Alpha Analytical shall be to re-perform the work at it's own expense. In no event shall Alpha Analytical be held liable for any incidental, consequential or special damages, including but not limited to, damages in any way connected with the use of, interpretation of, information or analysis provided by Alpha Analytical.

We strongly urge our clients to comply with EPA protocol regarding sample volume, preservation, cooling, containers, sampling procedures, holding time and splitting of samples in the field.

Certification Information

Last revised December 11, 2013

The following analytes are not included in our NELAP Scope of Accreditation:

Westborough Facility
EPA 524.2: Acetone, 2-Butanone (Methyl ethyl ketone (MEK)), Tert-butyl alcohol, 2-Hexanone, Tetrahydrofuran, 1,3,5-Trichlorobenzene, 4-Methyl-2-pentanone (MIBK), Carbon disulfide, Diethyl ether.
EPA 8260C: 1,2,4,5-Tetramethylbenzene, 4-Ethyltoluene, Iodomethane (methyl iodide), Methyl methacrylate, Azobenzene.
EPA 8330A/B: PETN, Picric Acid, Nitroglycerine, 2,6-DANT, 2,4-DANT.
EPA 8270D: 1-Methylnaphthalene, Dimethylnaphthalene,1,4-Diphenylhydrazine.
EPA 625: 4-Chloroaniline, 4-Methylphenol.
SM4500: Soil: Total Phosphorus, TKN, NO2, NO3.
EPA 9071: Total Petroleum Hydrocarbons, Oil & Grease.

Mansfield Facility
EPA 8270D: Biphenyl.
EPA TO-15: Halothane, 2,4,4-Trimethyl-2-pentene, 2,4,4-Trimethyl-1-pentene, Thiophene, 2-Methylthiophene, 3-Methylthiophene, 2-Ethylthiophene, 1,2,3-Trimethylbenzene, Indan, Indene, 1,2,4,5-Tetramethylbenzene, Benzothiophene, 1-Methylnaphthalene.

The following analytes are included in our Massachusetts DEP Scope of Accreditation, Westborough Facility:

Drinking Water
EPA 200.8: Sb,As,Ba,Be,Cd,Cr,Cu,Pb,Ni,Se,Tl; **EPA 200.7**: Ba,Be,Ca,Cd,Cr,Cu,Na; **EPA 245.1:** Mercury;
EPA 300.0: Nitrate-N, Fluoride, Sulfate; **EPA 353.2**: Nitrate-N, Nitrite-N; **SM4500NO3-F**: Nitrate-N, Nitrite-N; **SM4500F-C, SM4500CN-CE, EPA 180.1, SM2130B, SM4500Cl-D, SM2320B, SM2540C, SM4500H-B**
EPA 332: Perchlorate.
Microbiology: **SM9215B; SM9223-P/A, SM9223B-Colilert-QT, Enterolert-QT.**

Non-Potable Water
EPA 200.8: Al,Sb,As,Be,Cd,Cr,Cu,Pb,Mn,Ni,Se,Ag,Tl,Zn;
EPA 200.7: Al,Sb,As,Be,Cd,Ca,Cr,Co,Cu,Fe,Pb,Mg,Mn,Mo,Ni,K,Se,Ag,Na,Sr,Ti,Tl,V,Zn;
EPA 245.1, SM4500H,B, EPA 120.1, SM2510B, SM2540C, SM2340B, SM2320B, SM4500CL-E, SM4500F-BC, SM426C, SM4500NH3-BH, **EPA 350.1**: Ammonia-N, **LACHAT 10-107-06-1-B**: Ammonia-N, **SM4500NO3-F,**
EPA 353.2: Nitrate-N**, SM4500NH3-BC-NES, EPA 351.1, SM4500P-E, SM4500P-B, E, SM5220D, EPA 410.4, SM5210B, SM5310C, SM4500CL-D, EPA 1664, SM14 510AC, EPA 420.1, SM4500-CN-CE, SM2540D.**
EPA 624: Volatile Halocarbons & Aromatics,
EPA 608: Chlordane, Toxaphene, Aldrin, alpha-BHC, beta-BHC, gamma-BHC, delta-BHC, Dieldrin, DDD, DDE, DDT, Endosulfan I, Endosulfan II, Endosulfan sulfate, Endrin, Endrin Aldehyde, Heptachlor, Heptachlor Epoxide, PCBs
EPA 625: SVOC (Acid/Base/Neutral Extractables), **EPA 600/4-81-045**: PCB-Oil.
Microbiology: **SM9223B-Colilert-QT; Enterolert-QT, SM9222D-MF**.

For a complete listing of analytes and methods, please contact your Alpha Project Manager.

AIR ANALYSIS - SORBENT MEDIA
CHAIN OF CUSTODY

Page 1 of 1

Date Rec'd in Lab

ALPHA Job # L1401597

Westborough, MA
TEL: 508-898-9220
FAX: 508-822-3288

Mansfield, MA
TEL: 508-822-9300
508-822-3288

Client Information

Client: TRC
Address: 650 Suffolt St
Phone: 978 970 5600
Fax:
Email: DSullivan@TRCsolutions.com

Project Information

Project Name: NBHS IRA PSWS
Project Location: New Bedford, MA
Project # 115058
(Use Project name as Project #) ☐
Project Manager: Dave Sullivan
ALPHA Quote #:

Turn-Around Time

Standard ☒ Due Date:
Rush (only if pre approved) ☐ Time:

Report Information - Data Deliverables

☐ FAX
☐ ADEx
Criteria Checker:
Other Formats:
☒ EMAIL
☐ Add'l Deliverables

Report to: (if different than Project Manager)

Billing Information

☐ Same as Client Info
PO # CN5058

Regulatory Requirements/Report Limits

State/Fed	Program	Criteria
MA	MCP	

These samples have been previously analyzed by Alpha ☐

Other Project Specific Requirements/ Comments/Detection Limits
Refer to Melissa Gulli for RL's discussed with Matt Oliveira

For PCBs, selection is REQUIRED:
☐ Congeners
☐ Homologs
☐ Aroclors (Low Vol only)

ANALYSIS

NOTE: For metals, please specify elements of interest and media type.
☐ PM-10
☐ TSP
☐ MCE

All Columns Below Must Be Filled Out

ALPHA Lab ID (Lab Use Only)	Sample ID	Collection Date	Start Time	End Time	Flow Rate (L/min)	Total Volume (L)	Sample Matrix*	Sampler's Initials	Media ID# (1)	TO-13A	PCBs (High Vol)	PCBs (Low Vol)	TO-11A	Hg via NIOSH 6009 Mod.	Metals	TO-17	Soxhlet PCB	Sample Comments (i.e. PID)
1597-01	Vapor Inlet	1/16/14	09:13	13:13	5L/m	1200	~~Puff~~ SV	SB	1								X	
-02	Vapor Outlet	1/16/14	09:18	13:18	5L/min	1200	~~Puff~~ SV	SB	1								X	
Media Type										P	P	P	D	T	F	T		

* SAMPLE MATRIX CODES
AA = Ambient Air (Indoor/Outdoor)
SV = Soil Vapor/Landfill Gas/SVE
Other = Please Specify

(1) Required for PUF cartridges, PM-10 and TSP filters and TO-17 sorbent tubes.

Media Code
D = DNPH Cartridge
F = Filter
P = PUF Cartridge
T = Sorbent Tube
O = Other

Relinquished By:	Date/Time	Received By:	Date/Time
Stephen P Brown	1/16/14 1634	MGM	1/16/14 1634
MGM	1/16/14 1735	[illegible]	1/17/14 0900

Form No: 101-13 (rev 01-OCT-2013)

Please print clearly, legibly and completely. Samples can not be logged in and turnaround time clock will not start until any ambiguities are resolved. BY EXECUTING THIS COC, THE CLIENT HAS READ AND AGREES TO BE BOUND BY ALPHA'S TERMS & CONDITIONS. (See reverse side.)

Sample Results

Lab ID:	L1401597-01	Sampling Time:	4	hrs
		Sampling Rate:	5	L/min
Matrix:	Air Media	Total Flow:	1200	L

PCB Aroclors in Air

	ng/cart				ug/m3				Dilution	
Parameter	Result	Units	RL	MDL	Result	Units	RL	MDL	Factor	Column
									1	A
Aroclor 1016	ND	ng/cart	30	-	ND	ug/m3	0.0250	-	1	A
Aroclor 1221	ND	ng/cart	100	-	ND	ug/m3	0.0833	-	1	A
Aroclor 1232	ND	ng/cart	30	-	ND	ug/m3	0.0250	-	1	A
Aroclor 1242	106	ng/cart	20	-	0.08833	ug/m3	0.0167	-	1	B
Aroclor 1248	ND	ng/cart	20	-	ND	ug/m3	0.0167	-	1	A
Aroclor 1254	61.2	ng/cart	20	-	0.0510	ug/m3	0.0167	-	1	A
Aroclor 1260	ND	ng/cart	20	-	ND	ug/m3	0.0167	-	1	A
Aroclor 1262	ND	ng/cart	20	-	ND	ug/m3	0.0167	-	1	A
Aroclor 1268	ND	ng/cart	20	-	ND	ug/m3	0.0167	-	1	A

Sample Results

Lab ID:	L1401597-02	Sampling Time:	4	hrs
		Sampling Rate:	5	L/min
Matrix:	Air Media	Total Flow:	1200	L

PCB Aroclors in Air

	ng/cart				ug/m3				Dilution	
Parameter	**Result**	**Units**	**RL**	**MDL**	**Result**	**Units**	**RL**	**MDL**	**Factor**	**Column**
									1	A
Aroclor 1016	ND	ng/cart	30	-	ND	ug/m3	0.0250	-	1	A
Aroclor 1221	ND	ng/cart	100	-	ND	ug/m3	0.0833	-	1	A
Aroclor 1232	ND	ng/cart	30	-	ND	ug/m3	0.0250	-	1	A
Aroclor 1242	ND	ng/cart	20	-	ND	ug/m3	0.0167	-	1	A
Aroclor 1248	ND	ng/cart	20	-	ND	ug/m3	0.0167	-	1	A
Aroclor 1254	ND	ng/cart	20	-	ND	ug/m3	0.0167	-	1	A
Aroclor 1260	ND	ng/cart	20	-	ND	ug/m3	0.0167	-	1	A
Aroclor 1262	ND	ng/cart	20	-	ND	ug/m3	0.0167	-	1	A
Aroclor 1268	ND	ng/cart	20	-	ND	ug/m3	0.0167	-	1	A

ANALYTICAL REPORT

Lab Number:	L1401595
Client:	TRC Environmental Consultants Wannalancit Mills 650 Suffolk Street Lowell, MA 01854
ATTN:	David Sullivan
Phone:	(978) 656-3565
Project Name:	NBHS IRA PSWS
Project Number:	115058
Report Date:	01/23/14

The original project report/data package is held by Alpha Analytical. This report/data package is paginated and should be reproduced only in its entirety. Alpha Analytical holds no responsibility for results and/or data that are not consistent with the original.

Certifications & Approvals: NY (11627), CT (PH-0141), NH (2206), NJ NELAP (MA015), RI (LAO00299), PA (68-02089), LA NELAP (03090), FL (E87814), TX (T104704419), WA (C954), DOD (L2217.01), USDA (Permit #P330-11-00109), US Army Corps of Engineers.

320 Forbes Boulevard, Mansfield, MA 02048-1806
508-822-9300 (Fax) 508-822-3288 800-624-9220 - www.alphalab.com

Project Name: NBHS IRA PSWS
Project Number: 115058

Lab Number: L1401595
Report Date: 01/23/14

Alpha Sample ID	Client ID	Sample Location	Collection Date/Time
L1401595-01	VAPOR INLET	NEW BEDFORD, MA	01/16/14 14:41
L1401595-02	VAPOR OUTLET	NEW BEDFORD, MA	01/16/14 14:39

Project Name: NBHS IRA PSWS **Lab Number:** L1401595

Project Number: 115058 **Report Date:** 01/23/14

MADEP MCP Response Action Analytical Report Certification

This form provides certifications for all samples performed by MCP methods. Please refer to the Sample Results and Container Information sections of this report for specification of MCP methods used for each analysis. The following questions pertain only to MCP Analytical Methods.

An affirmative response to questions A through F is required for "Presumptive Certainty" status		
A	Were all samples received in a condition consistent with those described on the Chain-of-Custody, properly preserved (including temperature) in the field or laboratory, and prepared/analyzed within method holding times?	YES
B	Were the analytical method(s) and all associated QC requirements specified in the selected CAM protocol(s) followed?	YES
C	Were all required corrective actions and analytical response actions specified in the selected CAM protocol(s) implemented for all identified performance standard non-conformances?	YES
D	Does the laboratory report comply with all the reporting requirements specified in CAM VII A, "Quality Assurance and Quality Control Guidelines for the Acquisition and Reporting of Analytical Data?"	YES
E a.	VPH, EPH, and APH Methods only: Was each method conducted without significant modification(s)? (Refer to the individual method(s) for a list of significant modifications).	N/A
E b.	APH and TO-15 Methods only: Was the complete analyte list reported for each method?	YES
F	Were all applicable CAM protocol QC and performance standard non-conformances identified and evaluated in a laboratory narrative (including all "No" responses to Questions A through E)?	YES

A response to questions G, H and I is required for "Presumptive Certainty" status		
G	Were the reporting limits at or below all CAM reporting limits specified in the selected CAM protocol(s)?	NO
H	Were all QC performance standards specified in the CAM protocol(s) achieved?	YES
I	Were results reported for the complete analyte list specified in the selected CAM protocol(s)?	YES

For any questions answered "No", please refer to the case narrative section on the following page(s).

Please note that sample matrix information is located in the Sample Results section of this report.

Project Name: NBHS IRA PSWS **Lab Number:** L1401595
Project Number: 115058 **Report Date:** 01/23/14

Case Narrative

The samples were received in accordance with the Chain of Custody and no significant deviations were encountered during the preparation or analysis unless otherwise noted. Sample Receipt, Container Information, and the Chain of Custody are located at the back of the report.

Results contained within this report relate only to the samples submitted under this Alpha Lab Number and meet all of the requirements of NELAC, for all NELAC accredited parameters. The data presented in this report is organized by parameter (i.e. VOC, SVOC, etc.). Sample specific Quality Control data (i.e. Surrogate Spike Recovery) is reported at the end of the target analyte list for each individual sample, followed by the Laboratory Batch Quality Control at the end of each parameter. If a sample was re-analyzed or re-extracted due to a required quality control corrective action and if both sets of data are reported, the Laboratory ID of the re-analysis or re-extraction is designated with an "R" or "RE", respectively. When multiple Batch Quality Control elements are reported (e.g. more than one LCS), the associated samples for each element are noted in the grey shaded header line of each data table. Any Laboratory Batch, Sample Specific % recovery or RPD value that is outside the listed Acceptance Criteria is bolded in the report. Performance criteria for CAM and RCP methods allow for some LCS compound failures to occur and still be within method compliance. In these instances, the specific failures are not narrated but are noted in the associated QC table. This information is also incorporated in the Data Usability format for our Data Merger tool where it can be reviewed along with any associated usability implications. Soil/sediments, solids and tissues are reported on a dry weight basis unless otherwise noted. Definitions of all data qualifiers and acronyms used in this report are provided in the Glossary located at the back of the report.

In reference to questions H (CAM) or 4 (RCP) when "NO" is checked, the performance criteria for CAM and RCP methods allow for some quality control failures to occur and still be within method compliance. In these instances the specific failure is not narrated but noted in the associated QC table. The information is also incorporated in the Data Usability format of our Data Merger tool where it can be reviewed along with any associated usability implications.

Please see the associated ADEx data file for a comparison of laboratory reporting limits that were achieved with the regulatory Numerical Standards requested on the Chain of Custody.

HOLD POLICY
For samples submitted on hold, Alpha's policy is to hold samples (with the exception of Air canisters) free of charge for 21 calendar days from the date the project is completed. After 21 calendar days, we will dispose of all samples submitted including those put on hold unless you have contacted your Client Service Representative and made arrangements for Alpha to continue to hold the samples. Air canisters will be disposed after 3 business days from the date the project is completed.

Please contact Client Services at 800-624-9220 with any questions.

Project Name: NBHS IRA PSWS **Lab Number:** L1401595
Project Number: 115058 **Report Date:** 01/23/14

Case Narrative (continued)

MCP Related Narratives

Canisters were released from the laboratory on January 15, 2014. The canister certification data is provided as an addendum.

MCP Volatile Organics in Air

In reference to question G:

One or more of the target analytes did not achieve the requested CAM reporting limits.

I, the undersigned, attest under the pains and penalties of perjury that, to the best of my knowledge and belief and based upon my personal inquiry of those responsible for providing the information contained in this analytical report, such information is accurate and complete. This certificate of analysis is not complete unless this page accompanies any and all pages of this report.

Authorized Signature: Kathleen O'Brien

Title: Technical Director/Representative Date: 01/23/14

AIR

Project Name: NBHS IRA PSWS
Project Number: 115058
Lab Number: L1401595
Report Date: 01/23/14

SAMPLE RESULTS

Lab ID: L1401595-01
Client ID: VAPOR INLET
Sample Location: NEW BEDFORD, MA
Matrix: Soil_Vapor
Anaytical Method: 101,TO-15
Analytical Date: 01/21/14 00:28
Analyst: MB

Date Collected: 01/16/14 14:41
Date Received: 01/16/14
Field Prep: Not Specified

Parameter	ppbV Results	ppbV RL	ppbV MDL	ug/m3 Results	ug/m3 RL	ug/m3 MDL	Qualifier	Dilution Factor
MCP Volatile Organics in Air - Mansfield Lab								
Vinyl chloride	16.9	0.200	--	43.2	0.511	--		1
Bromomethane	ND	0.200	--	ND	0.777	--		1
Acetone	2.20	1.00	--	5.23	2.38	--		1
1,1-Dichloroethene	ND	0.200	--	ND	0.793	--		1
Methylene chloride	ND	1.40	--	ND	4.86	--		1
trans-1,2-Dichloroethene	4.43	0.200	--	17.6	0.793	--		1
1,1-Dichloroethane	ND	0.200	--	ND	0.809	--		1
Methyl tert butyl ether	ND	0.200	--	ND	0.721	--		1
2-Butanone	0.474	0.200	--	1.40	0.590	--		1
cis-1,2-Dichloroethene	6.56	0.200	--	26.0	0.793	--		1
Chloroform	ND	0.200	--	ND	0.977	--		1
1,2-Dichloroethane	ND	0.200	--	ND	0.809	--		1
1,1,1-Trichloroethane	ND	0.200	--	ND	1.09	--		1
Benzene	ND	0.200	--	ND	0.639	--		1
Carbon tetrachloride	ND	0.200	--	ND	1.26	--		1
1,2-Dichloropropane	ND	0.200	--	ND	0.924	--		1
Bromodichloromethane	ND	0.200	--	ND	1.34	--		1
1,4-Dioxane	ND	0.200	--	ND	0.721	--		1
Trichloroethene	0.543	0.200	--	2.92	1.07	--		1
cis-1,3-Dichloropropene	ND	0.200	--	ND	0.908	--		1
4-Methyl-2-pentanone	ND	0.200	--	ND	0.820	--		1
trans-1,3-Dichloropropene	ND	0.200	--	ND	0.908	--		1
1,1,2-Trichloroethane	ND	0.200	--	ND	1.09	--		1
Toluene	0.959	0.200	--	3.61	0.754	--		1

Project Name: NBHS IRA PSWS
Project Number: 115058
Lab Number: L1401595
Report Date: 01/23/14

SAMPLE RESULTS

Lab ID: L1401595-01
Client ID: VAPOR INLET
Sample Location: NEW BEDFORD, MA
Date Collected: 01/16/14 14:41
Date Received: 01/16/14
Field Prep: Not Specified

Parameter	ppbV Results	ppbV RL	ppbV MDL	ug/m3 Results	ug/m3 RL	ug/m3 MDL	Qualifier	Dilution Factor
MCP Volatile Organics in Air - Mansfield Lab								
Dibromochloromethane	ND	0.200	--	ND	1.70	--		1
1,2-Dibromoethane	ND	0.200	--	ND	1.54	--		1
Tetrachloroethene	ND	0.200	--	ND	1.36	--		1
Chlorobenzene	ND	0.200	--	ND	0.921	--		1
Ethylbenzene	ND	0.200	--	ND	0.869	--		1
p/m-Xylene	ND	0.400	--	ND	1.74	--		1
Bromoform	ND	0.200	--	ND	2.07	--		1
Styrene	ND	0.200	--	ND	0.852	--		1
1,1,2,2-Tetrachloroethane	ND	0.200	--	ND	1.37	--		1
o-Xylene	ND	0.200	--	ND	0.869	--		1
1,3-Dichlorobenzene	ND	0.200	--	ND	1.20	--		1
1,4-Dichlorobenzene	0.247	0.200	--	1.49	1.20	--		1
1,2-Dichlorobenzene	ND	0.200	--	ND	1.20	--		1
1,2,4-Trichlorobenzene	ND	0.200	--	ND	1.48	--		1
Naphthalene	ND	0.200	--	ND	1.05	--		1
Hexachlorobutadiene	ND	0.200	--	ND	2.13	--		1

Internal Standard	% Recovery	Qualifier	Acceptance Criteria
1,4-Difluorobenzene	89		60-140
Bromochloromethane	83		60-140
chlorobenzene-d5	89		60-140

Project Name: NBHS IRA PSWS
Project Number: 115058
Lab Number: L1401595
Report Date: 01/23/14

SAMPLE RESULTS

Lab ID: L1401595-02
Client ID: VAPOR OUTLET
Sample Location: NEW BEDFORD, MA
Matrix: Soil_Vapor
Anaytical Method: 101,TO15-SIM
Analytical Date: 01/21/14 20:51
Analyst: MB

Date Collected: 01/16/14 14:39
Date Received: 01/16/14
Field Prep: Not Specified

Parameter	ppbV Results	ppbV RL	ppbV MDL	ug/m3 Results	ug/m3 RL	ug/m3 MDL	Qualifier	Dilution Factor
MCP Volatile Organics in Air by SIM - Mansfield Lab								
Vinyl chloride	0.120	0.020	--	0.307	0.051	--		1
Bromomethane	ND	0.020	--	ND	0.078	--		1
Acetone	ND	1.00	--	ND	2.38	--		1
1,1-Dichloroethene	ND	0.020	--	ND	0.079	--		1
Methylene chloride	ND	1.40	--	ND	4.86	--		1
trans-1,2-Dichloroethene	2.78	0.020	--	11.0	0.079	--		1
1,1-Dichloroethane	ND	0.020	--	ND	0.081	--		1
Methyl tert butyl ether	ND	0.020	--	ND	0.072	--		1
2-Butanone	ND	0.200	--	ND	0.590	--		1
cis-1,2-Dichloroethene	8.13	0.020	--	32.2	0.079	--		1
Chloroform	0.090	0.020	--	0.440	0.098	--		1
1,2-Dichloroethane	ND	0.020	--	ND	0.081	--		1
1,1,1-Trichloroethane	ND	0.020	--	ND	0.109	--		1
Benzene	ND	0.100	--	ND	0.319	--		1
Carbon tetrachloride	ND	0.020	--	ND	0.126	--		1
1,2-Dichloropropane	ND	0.020	--	ND	0.092	--		1
Bromodichloromethane	ND	0.020	--	ND	0.134	--		1
1,4-Dioxane	ND	0.100	--	ND	0.360	--		1
Trichloroethene	ND	0.020	--	ND	0.107	--		1
cis-1,3-Dichloropropene	ND	0.020	--	ND	0.091	--		1
4-Methyl-2-pentanone	ND	0.200	--	ND	0.820	--		1
trans-1,3-Dichloropropene	ND	0.020	--	ND	0.091	--		1
1,1,2-Trichloroethane	ND	0.020	--	ND	0.109	--		1
Toluene	0.136	0.050	--	0.513	0.188	--		1

Project Name: NBHS IRA PSWS
Project Number: 115058
Lab Number: L1401595
Report Date: 01/23/14

SAMPLE RESULTS

Lab ID: L1401595-02
Client ID: VAPOR OUTLET
Sample Location: NEW BEDFORD, MA
Date Collected: 01/16/14 14:39
Date Received: 01/16/14
Field Prep: Not Specified

Parameter	ppbV Results	ppbV RL	ppbV MDL	ug/m3 Results	ug/m3 RL	ug/m3 MDL	Qualifier	Dilution Factor
MCP Volatile Organics in Air by SIM - Mansfield Lab								
Dibromochloromethane	ND	0.020	--	ND	0.170	--		1
1,2-Dibromoethane	ND	0.020	--	ND	0.154	--		1
Tetrachloroethene	ND	0.020	--	ND	0.136	--		1
Chlorobenzene	ND	0.020	--	ND	0.092	--		1
Ethylbenzene	0.020	0.020	--	0.087	0.087	--		1
p/m-Xylene	0.070	0.040	--	0.304	0.174	--		1
Bromoform	ND	0.020	--	ND	0.207	--		1
Styrene	ND	0.020	--	ND	0.085	--		1
1,1,2,2-Tetrachloroethane	ND	0.020	--	ND	0.137	--		1
o-Xylene	0.025	0.020	--	0.109	0.087	--		1
1,3-Dichlorobenzene	ND	0.020	--	ND	0.120	--		1
1,4-Dichlorobenzene	ND	0.020	--	ND	0.120	--		1
1,2-Dichlorobenzene	ND	0.020	--	ND	0.120	--		1
1,2,4-Trichlorobenzene	ND	0.050	--	ND	0.371	--		1
Naphthalene	ND	0.050	--	ND	0.262	--		1
Hexachlorobutadiene	ND	0.050	--	ND	0.533	--		1

Internal Standard	% Recovery	Qualifier	Acceptance Criteria
1,4-difluorobenzene	100		60-140
bromochloromethane	107		60-140
chlorobenzene-d5	100		60-140

Project Name: NBHS IRA PSWS
Project Number: 115058

Lab Number: L1401595
Report Date: 01/23/14

Method Blank Analysis
Batch Quality Control

Analytical Method: 101,TO-15
Analytical Date: 01/20/14 15:36

Parameter	ppbV Results	ppbV RL	ppbV MDL	ug/m3 Results	ug/m3 RL	ug/m3 MDL	Qualifier	Dilution Factor
MCP Volatile Organics in Air - Mansfield Lab for sample(s): 01 Batch: WG665821-4								
Chlorodifluoromethane	ND	0.200	--	ND	0.707	--		1
Propylene	ND	0.500	--	ND	0.861	--		1
Chloromethane	ND	0.200	--	ND	0.413	--		1
1,2-Dichloro-1,1,2,2-tetrafluoroethane	ND	0.200	--	ND	1.40	--		1
Vinyl chloride	ND	0.200	--	ND	0.511	--		1
1,3-Butadiene	ND	0.200	--	ND	0.442	--		1
Butane	ND	0.200	--	ND	0.475	--		1
Bromomethane	ND	0.200	--	ND	0.777	--		1
Chloroethane	ND	0.200	--	ND	0.528	--		1
Ethyl Alcohol	ND	2.50	--	ND	4.71	--		1
Dichlorofluoromethane	ND	0.200	--	ND	0.842	--		1
Vinyl bromide	ND	0.200	--	ND	0.874	--		1
Acrolein	ND	0.500	--	ND	1.15	--		1
Acetone	ND	1.00	--	ND	2.38	--		1
Acetonitrile	ND	0.200	--	ND	0.336	--		1
Trichlorofluoromethane	ND	0.200	--	ND	1.12	--		1
iso-Propyl Alcohol	ND	0.500	--	ND	1.23	--		1
Acrylonitrile	ND	0.200	--	ND	0.434	--		1
Pentane	ND	0.200	--	ND	0.590	--		1
Ethyl ether	ND	0.200	--	ND	0.606	--		1
1,1-Dichloroethene	ND	0.200	--	ND	0.793	--		1
tert-Butyl Alcohol	ND	0.500	--	ND	1.52	--		1
Methylene chloride	ND	1.40	--	ND	4.86	--		1
3-Chloropropene	ND	0.200	--	ND	0.626	--		1
Carbon disulfide	ND	0.200	--	ND	0.623	--		1

Project Name: NBHS IRA PSWS
Project Number: 115058
Lab Number: L1401595
Report Date: 01/23/14

Method Blank Analysis
Batch Quality Control

Analytical Method: 101,TO-15
Analytical Date: 01/20/14 15:36

Parameter	ppbV Results	ppbV RL	ppbV MDL	ug/m3 Results	ug/m3 RL	ug/m3 MDL	Qualifier	Dilution Factor
MCP Volatile Organics in Air - Mansfield Lab for sample(s): 01 Batch: WG665821-4								
1,1,2-Trichloro-1,2,2-Trifluoroethane	ND	0.200	--	ND	1.53	--		1
trans-1,2-Dichloroethene	ND	0.200	--	ND	0.793	--		1
1,1-Dichloroethane	ND	0.200	--	ND	0.809	--		1
Methyl tert butyl ether	ND	0.200	--	ND	0.721	--		1
Vinyl acetate	ND	0.200	--	ND	0.704	--		1
2-Butanone	ND	0.200	--	ND	0.590	--		1
cis-1,2-Dichloroethene	ND	0.200	--	ND	0.793	--		1
Ethyl Acetate	ND	0.500	--	ND	1.80	--		1
Chloroform	ND	0.200	--	ND	0.977	--		1
Tetrahydrofuran	ND	0.200	--	ND	0.590	--		1
2,2-Dichloropropane	ND	0.200	--	ND	0.924	--		1
1,2-Dichloroethane	ND	0.200	--	ND	0.809	--		1
n-Hexane	ND	0.200	--	ND	0.705	--		1
Isopropyl Ether	ND	0.200	--	ND	0.836	--		1
Ethyl-Tert-Butyl-Ether	ND	0.200	--	ND	0.836	--		1
1,1,1-Trichloroethane	ND	0.200	--	ND	1.09	--		1
1,1-Dichloropropene	ND	0.200	--	ND	0.908	--		1
Benzene	ND	0.200	--	ND	0.639	--		1
Carbon tetrachloride	ND	0.200	--	ND	1.26	--		1
Cyclohexane	ND	0.200	--	ND	0.688	--		1
Tertiary-Amyl Methyl Ether	ND	0.200	--	ND	0.836	--		1
Dibromomethane	ND	0.200	--	ND	1.42	--		1
1,2-Dichloropropane	ND	0.200	--	ND	0.924	--		1
Bromodichloromethane	ND	0.200	--	ND	1.34	--		1
1,4-Dioxane	ND	0.200	--	ND	0.721	--		1

Project Name: NBHS IRA PSWS
Project Number: 115058

Lab Number: L1401595
Report Date: 01/23/14

Method Blank Analysis
Batch Quality Control

Analytical Method: 101,TO-15
Analytical Date: 01/20/14 15:36

Parameter	ppbV Results	ppbV RL	ppbV MDL	ug/m3 Results	ug/m3 RL	ug/m3 MDL	Qualifier	Dilution Factor
MCP Volatile Organics in Air - Mansfield Lab for sample(s): 01 Batch: WG665821-4								
Trichloroethene	ND	0.200	--	ND	1.07	--		1
2,2,4-Trimethylpentane	ND	0.200	--	ND	0.934	--		1
Heptane	ND	0.200	--	ND	0.820	--		1
cis-1,3-Dichloropropene	ND	0.200	--	ND	0.908	--		1
4-Methyl-2-pentanone	ND	0.200	--	ND	0.820	--		1
trans-1,3-Dichloropropene	ND	0.200	--	ND	0.908	--		1
1,1,2-Trichloroethane	ND	0.200	--	ND	1.09	--		1
Toluene	ND	0.200	--	ND	0.754	--		1
1,3-Dichloropropane	ND	0.200	--	ND	0.924	--		1
2-Hexanone	ND	0.200	--	ND	0.820	--		1
Dibromochloromethane	ND	0.200	--	ND	1.70	--		1
1,2-Dibromoethane	ND	0.200	--	ND	1.54	--		1
Butyl Acetate	ND	0.500	--	ND	2.38	--		1
Octane	ND	0.200	--	ND	0.934	--		1
Tetrachloroethene	ND	0.200	--	ND	1.36	--		1
1,1,1,2-Tetrachloroethane	ND	0.200	--	ND	1.37	--		1
Chlorobenzene	ND	0.200	--	ND	0.921	--		1
Ethylbenzene	ND	0.200	--	ND	0.869	--		1
p/m-Xylene	ND	0.400	--	ND	1.74	--		1
Bromoform	ND	0.200	--	ND	2.07	--		1
Styrene	ND	0.200	--	ND	0.852	--		1
1,1,2,2-Tetrachloroethane	ND	0.200	--	ND	1.37	--		1
o-Xylene	ND	0.200	--	ND	0.869	--		1
1,2,3-Trichloropropane	ND	0.200	--	ND	1.21	--		1
Nonane (C9)	ND	0.200	--	ND	1.05	--		1

Project Name: NBHS IRA PSWS
Project Number: 115058

Lab Number: L1401595
Report Date: 01/23/14

Method Blank Analysis
Batch Quality Control

Analytical Method: 101,TO-15
Analytical Date: 01/20/14 15:36

Parameter	ppbV Results	ppbV RL	ppbV MDL	ug/m3 Results	ug/m3 RL	ug/m3 MDL	Qualifier	Dilution Factor
MCP Volatile Organics in Air - Mansfield Lab for sample(s): 01 Batch: WG665821-4								
Isopropylbenzene	ND	0.200	--	ND	0.983	--		1
Bromobenzene	ND	0.200	--	ND	0.793	--		1
o-Chlorotoluene	ND	0.200	--	ND	1.04	--		1
n-Propylbenzene	ND	0.200	--	ND	0.983	--		1
p-Chlorotoluene	ND	0.200	--	ND	1.04	--		1
4-Ethyltoluene	ND	0.200	--	ND	0.983	--		1
1,3,5-Trimethylbenzene	ND	0.200	--	ND	0.983	--		1
tert-Butylbenzene	ND	0.200	--	ND	1.10	--		1
1,2,4-Trimethylbenzene	ND	0.200	--	ND	0.983	--		1
Decane (C10)	ND	0.200	--	ND	1.16	--		1
Benzyl chloride	ND	0.200	--	ND	1.04	--		1
1,3-Dichlorobenzene	ND	0.200	--	ND	1.20	--		1
1,4-Dichlorobenzene	ND	0.200	--	ND	1.20	--		1
sec-Butylbenzene	ND	0.200	--	ND	1.10	--		1
p-Isopropyltoluene	ND	0.200	--	ND	1.10	--		1
1,2-Dichlorobenzene	ND	0.200	--	ND	1.20	--		1
n-Butylbenzene	ND	0.200	--	ND	1.10	--		1
1,2-Dibromo-3-chloropropane	ND	0.200	--	ND	1.93	--		1
Undecane	ND	0.200	--	ND	1.28	--		1
Dodecane (C12)	ND	0.200	--	ND	1.39	--		1
1,2,4-Trichlorobenzene	ND	0.200	--	ND	1.48	--		1
Naphthalene	ND	0.200	--	ND	1.05	--		1
1,2,3-Trichlorobenzene	ND	0.200	--	ND	1.48	--		1
Hexachlorobutadiene	ND	0.200	--	ND	2.13	--		1

Project Name: NBHS IRA PSWS **Lab Number:** L1401595

Project Number: 115058 **Report Date:** 01/23/14

Method Blank Analysis
Batch Quality Control

Analytical Method: 101,TO15-SIM
Analytical Date: 01/21/14 13:33

Parameter	ppbV Results	ppbV RL	ppbV MDL	ug/m3 Results	ug/m3 RL	ug/m3 MDL	Qualifier	Dilution Factor
MCP Volatile Organics in Air by SIM - Mansfield Lab for sample(s): 02 Batch: WG666084-4								
Dichlorodifluoromethane	ND	0.050	--	ND	0.247	--		1
Chloromethane	ND	0.500	--	ND	1.03	--		1
Freon-114	ND	0.050	--	ND	0.349	--		1
Vinyl chloride	ND	0.020	--	ND	0.051	--		1
1,3-Butadiene	ND	0.020	--	ND	0.044	--		1
Bromomethane	ND	0.020	--	ND	0.078	--		1
Chloroethane	ND	0.020	--	ND	0.053	--		1
Acetone	ND	1.00	--	ND	2.38	--		1
Trichlorofluoromethane	ND	0.050	--	ND	0.281	--		1
Acrylonitrile	ND	0.500	--	ND	1.09	--		1
1,1-Dichloroethene	ND	0.020	--	ND	0.079	--		1
Methylene chloride	ND	1.40	--	ND	4.86	--		1
Freon-113	ND	0.050	--	ND	0.383	--		1
Halothane	ND	0.050	--	ND	0.404	--		1
trans-1,2-Dichloroethene	ND	0.020	--	ND	0.079	--		1
1,1-Dichloroethane	ND	0.020	--	ND	0.081	--		1
Methyl tert butyl ether	ND	0.020	--	ND	0.072	--		1
2-Butanone	ND	0.200	--	ND	0.590	--		1
cis-1,2-Dichloroethene	ND	0.020	--	ND	0.079	--		1
Chloroform	ND	0.020	--	ND	0.098	--		1
1,2-Dichloroethane	ND	0.020	--	ND	0.081	--		1
1,1,1-Trichloroethane	ND	0.020	--	ND	0.109	--		1
Benzene	ND	0.100	--	ND	0.319	--		1
Carbon tetrachloride	ND	0.020	--	ND	0.126	--		1
1,2-Dichloropropane	ND	0.020	--	ND	0.092	--		1

Project Name: NBHS IRA PSWS
Project Number: 115058

Lab Number: L1401595
Report Date: 01/23/14

Method Blank Analysis
Batch Quality Control

Analytical Method: 101,TO15-SIM
Analytical Date: 01/21/14 13:33

Parameter	ppbV Results	ppbV RL	ppbV MDL	ug/m3 Results	ug/m3 RL	ug/m3 MDL	Qualifier	Dilution Factor
MCP Volatile Organics in Air by SIM - Mansfield Lab for sample(s): 02 Batch: WG666084-4								
Bromodichloromethane	ND	0.020	--	ND	0.134	--		1
1,4-Dioxane	ND	0.100	--	ND	0.360	--		1
Trichloroethene	ND	0.020	--	ND	0.107	--		1
cis-1,3-Dichloropropene	ND	0.020	--	ND	0.091	--		1
4-Methyl-2-pentanone	ND	0.200	--	ND	0.820	--		1
trans-1,3-Dichloropropene	ND	0.020	--	ND	0.091	--		1
1,1,2-Trichloroethane	ND	0.020	--	ND	0.109	--		1
Toluene	ND	0.050	--	ND	0.188	--		1
Dibromochloromethane	ND	0.020	--	ND	0.170	--		1
1,2-Dibromoethane	ND	0.020	--	ND	0.154	--		1
Tetrachloroethene	ND	0.020	--	ND	0.136	--		1
1,1,1,2-Tetrachloroethane	ND	0.020	--	ND	0.137	--		1
Chlorobenzene	ND	0.020	--	ND	0.092	--		1
Ethylbenzene	ND	0.020	--	ND	0.087	--		1
p/m-Xylene	ND	0.040	--	ND	0.174	--		1
Bromoform	ND	0.020	--	ND	0.207	--		1
Styrene	ND	0.020	--	ND	0.085	--		1
1,1,2,2-Tetrachloroethane	ND	0.020	--	ND	0.137	--		1
o-Xylene	ND	0.020	--	ND	0.087	--		1
Isopropylbenzene	ND	0.500	--	ND	2.46	--		1
1,3,5-Trimethybenzene	ND	0.020	--	ND	0.098	--		1
1,2,4-Trimethylbenzene	ND	0.020	--	ND	0.098	--		1
1,3-Dichlorobenzene	ND	0.020	--	ND	0.120	--		1
1,4-Dichlorobenzene	ND	0.020	--	ND	0.120	--		1
sec-Butylbenzene	ND	0.500	--	ND	2.74	--		1

Project Name: NBHS IRA PSWS
Project Number: 115058

Lab Number: L1401595
Report Date: 01/23/14

Method Blank Analysis
Batch Quality Control

Analytical Method: 101,TO15-SIM
Analytical Date: 01/21/14 13:33

Parameter	ppbV Results	ppbV RL	ppbV MDL	ug/m3 Results	ug/m3 RL	ug/m3 MDL	Qualifier	Dilution Factor
MCP Volatile Organics in Air by SIM - Mansfield Lab for sample(s): 02 Batch: WG666084-4								
p-Isopropyltoluene	ND	0.500	--	ND	2.74	--		1
1,2-Dichlorobenzene	ND	0.020	--	ND	0.120	--		1
n-Butylbenzene	ND	0.500	--	ND	2.74	--		1
1,2,4-Trichlorobenzene	ND	0.050	--	ND	0.371	--		1
Naphthalene	ND	0.050	--	ND	0.262	--		1
1,2,3-Trichlorobenzene	ND	0.050	--	ND	0.371	--		1
Hexachlorobutadiene	ND	0.050	--	ND	0.533	--		1

Lab Control Sample Analysis
Batch Quality Control

Project Name: NBHS IRA PSWS
Project Number: 115058

Lab Number: L1401595
Report Date: 01/23/14

Parameter	LCS %Recovery	Qual	LCSD %Recovery	Qual	%Recovery Limits	RPD	Qual	RPD Limits
MCP Volatile Organics in Air - Mansfield Lab Associated sample(s): 01 Batch: WG665821-3								
Chlorodifluoromethane	82		-		70-130	-		
Propylene	95		-		70-130	-		
Chloromethane	84		-		70-130	-		
1,2-Dichloro-1,1,2,2-tetrafluoroethane	82		-		70-130	-		
Vinyl chloride	89		-		70-130	-		
1,3-Butadiene	100		-		70-130	-		
Bromomethane	89		-		70-130	-		
Chloroethane	92		-		70-130	-		
Ethyl Alcohol	86		-		70-130	-		
Dichlorofluoromethane	80		-		70-130	-		
Vinyl bromide	92		-		70-130	-		
Acrolein	91		-		70-130	-		
Acetone	107		-		50-150	-		
Acetonitrile	88		-		70-130	-		
Trichlorofluoromethane	91		-		70-130	-		
iso-Propyl Alcohol	82		-		70-130	-		
Acrylonitrile	81		-		70-130	-		
Pentane	82		-		70-130	-		
Ethyl ether	79		-		70-130	-		
1,1-Dichloroethene	87		-		70-130	-		
tert-Butyl Alcohol	77		-		70-130	-		

Lab Control Sample Analysis
Batch Quality Control

Project Name: NBHS IRA PSWS
Project Number: 115058

Lab Number: L1401595
Report Date: 01/23/14

Parameter	LCS %Recovery	Qual	LCSD %Recovery	Qual	%Recovery Limits	RPD	Qual	RPD Limits
MCP Volatile Organics in Air - Mansfield Lab Associated sample(s): 01 Batch: WG665821-3								
Methylene chloride	98		-		70-130	-		
3-Chloropropene	100		-		70-130	-		
Carbon disulfide	92		-		70-130	-		
1,1,2-Trichloro-1,2,2-Trifluoroethane	91		-		70-130	-		
trans-1,2-Dichloroethene	86		-		70-130	-		
1,1-Dichloroethane	90		-		70-130	-		
Methyl tert butyl ether	88		-		70-130	-		
Vinyl acetate	110		-		70-130	-		
2-Butanone	84		-		70-130	-		
cis-1,2-Dichloroethene	108		-		70-130	-		
Ethyl Acetate	85		-		70-130	-		
Chloroform	93		-		70-130	-		
Tetrahydrofuran	91		-		70-130	-		
2,2-Dichloropropane	84		-		70-130	-		
1,2-Dichloroethane	93		-		70-130	-		
n-Hexane	90		-		70-130	-		
Isopropyl Ether	85		-		70-130	-		
Ethyl-Tert-Butyl-Ether	86		-		70-130	-		
1,1,1-Trichloroethane	96		-		70-130	-		
1,1-Dichloropropene	95		-		70-130	-		
Benzene	92		-		70-130	-		

Lab Control Sample Analysis
Batch Quality Control

Project Name: NBHS IRA PSWS
Project Number: 115058

Lab Number: L1401595
Report Date: 01/23/14

Parameter	LCS %Recovery	Qual	LCSD %Recovery	Qual	%Recovery Limits	RPD	Qual	RPD Limits
MCP Volatile Organics in Air - Mansfield Lab Associated sample(s): 01 Batch: WG665821-3								
Carbon tetrachloride	98		-		70-130	-		
Cyclohexane	89		-		70-130	-		
Tertiary-Amyl Methyl Ether	82		-		70-130	-		
Dibromomethane	93		-		70-130	-		
1,2-Dichloropropane	90		-		70-130	-		
Bromodichloromethane	93		-		70-130	-		
1,4-Dioxane	80		-		50-150	-		
Trichloroethene	99		-		70-130	-		
2,2,4-Trimethylpentane	89		-		70-130	-		
Heptane	88		-		70-130	-		
cis-1,3-Dichloropropene	106		-		70-130	-		
4-Methyl-2-pentanone	89		-		70-130	-		
trans-1,3-Dichloropropene	91		-		70-130	-		
1,1,2-Trichloroethane	97		-		70-130	-		
Toluene	92		-		70-130	-		
1,3-Dichloropropane	90		-		70-130	-		
2-Hexanone	88		-		70-130	-		
Dibromochloromethane	89		-		70-130	-		
1,2-Dibromoethane	99		-		70-130	-		
Octane	88		-		70-130	-		
Tetrachloroethene	96		-		70-130	-		

Lab Control Sample Analysis
Batch Quality Control

Project Name: NBHS IRA PSWS
Project Number: 115058

Lab Number: L1401595
Report Date: 01/23/14

Parameter	LCS %Recovery	Qual	LCSD %Recovery	Qual	%Recovery Limits	RPD	Qual	RPD Limits
MCP Volatile Organics in Air - Mansfield Lab Associated sample(s): 01 Batch: WG665821-3								
1,1,1,2-Tetrachloroethane	90		-		70-130	-		
Chlorobenzene	94		-		70-130	-		
Ethylbenzene	92		-		70-130	-		
p/m-Xylene	91		-		70-130	-		
Bromoform	86		-		70-130	-		
Styrene	93		-		70-130	-		
1,1,2,2-Tetrachloroethane	90		-		70-130	-		
o-Xylene	93		-		70-130	-		
1,2,3-Trichloropropane	78		-		70-130	-		
Nonane (C9)	93		-		70-130	-		
Isopropylbenzene	90		-		70-130	-		
Bromobenzene	88		-		70-130	-		
o-Chlorotoluene	86		-		70-130	-		
n-Propylbenzene	85		-		70-130	-		
p-Chlorotoluene	88		-		70-130	-		
4-Ethyltoluene	81		-		70-130	-		
1,3,5-Trimethylbenzene	90		-		70-130	-		
tert-Butylbenzene	86		-		70-130	-		
1,2,4-Trimethylbenzene	92		-		70-130	-		
Decane (C10)	89		-		70-130	-		
Benzyl chloride	82		-		70-130	-		

Lab Control Sample Analysis
Batch Quality Control

Project Name: NBHS IRA PSWS
Project Number: 115058

Lab Number: L1401595
Report Date: 01/23/14

Parameter	LCS %Recovery	Qual	LCSD %Recovery	Qual	%Recovery Limits	RPD	Qual	RPD Limits
MCP Volatile Organics in Air - Mansfield Lab Associated sample(s): 01 Batch: WG665821-3								
1,3-Dichlorobenzene	92		-		70-130	-		
1,4-Dichlorobenzene	92		-		70-130	-		
sec-Butylbenzene	87		-		70-130	-		
p-Isopropyltoluene	81		-		70-130	-		
1,2-Dichlorobenzene	91		-		70-130	-		
n-Butylbenzene	90		-		70-130	-		
1,2-Dibromo-3-chloropropane	84		-		70-130	-		
Undecane	88		-		70-130	-		
Dodecane (C12)	90		-		70-130	-		
1,2,4-Trichlorobenzene	94		-		50-150	-		
Naphthalene	90		-		50-150	-		
1,2,3-Trichlorobenzene	88		-		70-130	-		
Hexachlorobutadiene	92		-		50-150	-		

Lab Control Sample Analysis
Batch Quality Control

Project Name: NBHS IRA PSWS
Project Number: 115058

Lab Number: L1401595
Report Date: 01/23/14

Parameter	LCS %Recovery	Qual	LCSD %Recovery	Qual	%Recovery Limits	RPD	Qual	RPD Limits
MCP Volatile Organics in Air by SIM - Mansfield Lab Associated sample(s): 02 Batch: WG666084-3								
Dichlorodifluoromethane	82		-		70-130	-		
Chloromethane	83		-		70-130	-		
1,2-Dichloro-1,1,2,2-tetrafluoroethane	82		-		70-130	-		
Vinyl chloride	80		-		70-130	-		
1,3-Butadiene	81		-		70-130	-		
Bromomethane	79		-		70-130	-		
Chloroethane	80		-		70-130	-		
Acetone	97		-		50-150	-		
Trichlorofluoromethane	90		-		70-130	-		
1,1-Dichloroethene	88		-		70-130	-		
Methylene chloride	87		-		70-130	-		
1,1,2-Trichloro-1,2,2-Trifluoroethane	85		-		70-130	-		
Halothane	90		-		70-130	-		
trans-1,2-Dichloroethene	78		-		70-130	-		
1,1-Dichloroethane	85		-		70-130	-		
Methyl tert butyl ether	78		-		70-130	-		
2-Butanone	86		-		70-130	-		
cis-1,2-Dichloroethene	99		-		70-130	-		
Chloroform	96		-		70-130	-		
1,2-Dichloroethane	91		-		70-130	-		
1,1,1-Trichloroethane	124		-		70-130	-		

Lab Control Sample Analysis
Batch Quality Control

Project Name: NBHS IRA PSWS
Project Number: 115058

Lab Number: L1401595
Report Date: 01/23/14

Parameter	LCS %Recovery	Qual	LCSD %Recovery	Qual	%Recovery Limits	RPD	Qual	RPD Limits
MCP Volatile Organics in Air by SIM - Mansfield Lab Associated sample(s): 02 Batch: WG666084-3								
Benzene	98		-		70-130	-		
Carbon tetrachloride	123		-		70-130	-		
1,2-Dichloropropane	107		-		70-130	-		
Bromodichloromethane	110		-		70-130	-		
1,4-Dioxane	99		-		50-150	-		
Trichloroethene	103		-		70-130	-		
cis-1,3-Dichloropropene	122		-		70-130	-		
4-Methyl-2-pentanone	126		-		70-130	-		
trans-1,3-Dichloropropene	110		-		70-130	-		
1,1,2-Trichloroethane	112		-		70-130	-		
Toluene	88		-		70-130	-		
Dibromochloromethane	96		-		70-130	-		
1,2-Dibromoethane	95		-		70-130	-		
Tetrachloroethene	89		-		70-130	-		
Chlorobenzene	92		-		70-130	-		
Ethylbenzene	94		-		70-130	-		
p/m-Xylene	97		-		70-130	-		
Bromoform	99		-		70-130	-		
Styrene	97		-		70-130	-		
1,1,2,2-Tetrachloroethane	101		-		70-130	-		
o-Xylene	98		-		70-130	-		

Lab Control Sample Analysis
Batch Quality Control

Project Name: NBHS IRA PSWS
Project Number: 115058

Lab Number: L1401595
Report Date: 01/23/14

Parameter	LCS %Recovery	Qual	LCSD %Recovery	Qual	%Recovery Limits	RPD	Qual	RPD Limits
MCP Volatile Organics in Air by SIM - Mansfield Lab Associated sample(s): 02 Batch: WG666084-3								
1,3,5-Trimethylbenzene	99		-		70-130	-		
1,2,4-Trimethylbenzene	101		-		70-130	-		
1,3-Dichlorobenzene	101		-		70-130	-		
1,4-Dichlorobenzene	100		-		70-130	-		
1,2-Dichlorobenzene	99		-		70-130	-		
1,2,4-Trichlorobenzene	99		-		50-150	-		
Naphthalene	88		-		50-150	-		
1,2,3-Trichlorobenzene	92		-		70-130	-		
Hexachlorobutadiene	102		-		50-150	-		

Lab Duplicate Analysis
Batch Quality Control

Project Name: NBHS IRA PSWS
Project Number: 115058

Lab Number: L1401595
Report Date: 01/23/14

Parameter	Native Sample	Duplicate Sample	Units	RPD	Qual	RPD Limits
MCP Volatile Organics in Air - Mansfield Lab Associated sample(s): 01 QC Batch ID: WG665821-5 QC Sample: L1401402-02 Client ID: DUP Sample						
Vinyl chloride	ND	ND	ppbV	NC		25
Chloroethane	ND	ND	ppbV	NC		25
1,1-Dichloroethene	ND	ND	ppbV	NC		25
trans-1,2-Dichloroethene	ND	ND	ppbV	NC		25
1,1-Dichloroethane	ND	ND	ppbV	NC		25
cis-1,2-Dichloroethene	ND	ND	ppbV	NC		25
1,2-Dichloroethane	ND	ND	ppbV	NC		25
1,1,1-Trichloroethane	ND	ND	ppbV	NC		25
Trichloroethene	ND	ND	ppbV	NC		25
1,1,2-Trichloroethane	ND	ND	ppbV	NC		25
Tetrachloroethene	ND	ND	ppbV	NC		25

Lab Duplicate Analysis
Batch Quality Control

Project Name: NBHS IRA PSWS
Project Number: 115058

Lab Number: L1401595
Report Date: 01/23/14

Parameter	Native Sample	Duplicate Sample	Units	RPD	RPD Limits
MCP Volatile Organics in Air by SIM - Mansfield Lab Associated sample(s): 02 QC Batch ID: WG666084-5 QC Sample: L1401723-02 Client ID: DUP Sample					
Vinyl chloride	ND	ND	ppbV	NC	25
Bromomethane	ND	ND	ppbV	NC	25
Acetone	13.3	13.1	ppbV	2	25
1,1-Dichloroethene	ND	ND	ppbV	NC	25
Methylene chloride	ND	ND	ppbV	NC	25
trans-1,2-Dichloroethene	ND	ND	ppbV	NC	25
1,1-Dichloroethane	ND	ND	ppbV	NC	25
Methyl tert butyl ether	ND	ND	ppbV	NC	25
2-Butanone	0.493	0.488	ppbV	1	25
cis-1,2-Dichloroethene	0.023	0.022	ppbV	4	25
Chloroform	0.128	0.128	ppbV	0	25
1,2-Dichloroethane	0.077	0.076	ppbV	1	25
1,1,1-Trichloroethane	ND	ND	ppbV	NC	25
Benzene	0.338	0.375	ppbV	10	25
Carbon tetrachloride	0.088	0.085	ppbV	3	25
1,2-Dichloropropane	ND	ND	ppbV	NC	25
Bromodichloromethane	ND	ND	ppbV	NC	25
1,4-Dioxane	ND	ND	ppbV	NC	25
Trichloroethene	1.11	1.10	ppbV	1	25

Lab Duplicate Analysis
Batch Quality Control

Project Name: NBHS IRA PSWS
Project Number: 115058

Lab Number: L1401595
Report Date: 01/23/14

Parameter	Native Sample	Duplicate Sample	Units	RPD	RPD Limits
MCP Volatile Organics in Air by SIM - Mansfield Lab Associated sample(s): 02 QC Batch ID: WG666084-5 QC Sample: L1401723-02 Client ID: DUP Sample					
cis-1,3-Dichloropropene	ND	ND	ppbV	NC	25
4-Methyl-2-pentanone	ND	ND	ppbV	NC	25
trans-1,3-Dichloropropene	ND	ND	ppbV	NC	25
1,1,2-Trichloroethane	ND	ND	ppbV	NC	25
Toluene	1.66	1.65	ppbV	1	25
Dibromochloromethane	ND	ND	ppbV	NC	25
1,2-Dibromoethane	ND	ND	ppbV	NC	25
Tetrachloroethene	0.066	0.067	ppbV	2	25
Chlorobenzene	ND	ND	ppbV	NC	25
Ethylbenzene	0.226	0.205	ppbV	10	25
p/m-Xylene	0.704	0.710	ppbV	1	25
Bromoform	ND	ND	ppbV	NC	25
Styrene	0.091	0.089	ppbV	2	25
1,1,2,2-Tetrachloroethane	ND	ND	ppbV	NC	25
o-Xylene	0.210	0.211	ppbV	0	25
1,3-Dichlorobenzene	ND	ND	ppbV	NC	25
1,4-Dichlorobenzene	0.024	0.024	ppbV	0	25
1,2-Dichlorobenzene	ND	ND	ppbV	NC	25
1,2,4-Trichlorobenzene	ND	ND	ppbV	NC	25

Lab Duplicate Analysis
Batch Quality Control

Project Name: NBHS IRA PSWS
Project Number: 115058

Lab Number: L1401595
Report Date: 01/23/14

Parameter	Native Sample	Duplicate Sample	Units	RPD	RPD Limits
MCP Volatile Organics in Air by SIM - Mansfield Lab Associated sample(s): 02 QC Batch ID: WG666084-5 QC Sample: L1401723-02 Client ID: DUP Sample					
Naphthalene	0.073	0.066	ppbV	10	25
Hexachlorobutadiene	ND	ND	ppbV	NC	25

Project Name: NBHS IRA PSWS

Project Number: 115058

Lab Number: L1401595

Report Date: 01/23/14

Canister and Flow Controller Information

Samplenum	Client ID	Media ID	Media Type	Date Prepared	Bottle Order	Cleaning Batch ID	Can Leak Check	Initial Pressure (in. Hg)	Pressure on Receipt (in. Hg)	Flow Controler Leak Chk	Flow Out mL/min	Flow In mL/min	% RPD
L1401595-01	VAPOR INLET	0040	#90 SV	01/15/14	97738		-	-	-	Pass	200	215	7
L1401595-01	VAPOR INLET	483	2.7L Can	01/15/14	97738	L1400744-02	Pass	-29.3	-2.6	-	-	-	-
L1401595-02	VAPOR OUTLET	0501	#90 SV	01/15/14	97738		-	-	-	Pass	200	207	3
L1401595-02	VAPOR OUTLET	150	2.7L Can	01/15/14	97738	L1400744-02	Pass	-29.3	-1.8	-	-	-	-

Project Name: BATCH CANISTER CERTIFICATION **Lab Number:** L1400744

Project Number: CANISTER QC BAT **Report Date:** 01/23/14

Air Canister Certification Results

Lab ID:	L1400744-02	Date Collected:	01/03/14 17:32
Client ID:	CAN 197 SHELF 7	Date Received:	01/04/14
Sample Location:		Field Prep:	Not Specified
Matrix:	Air		
Anaytical Method:	48,TO-15		
Analytical Date:	01/04/14 17:41		
Analyst:	RY		

	ppbV			ug/m3				
Parameter	**Results**	**RL**	**MDL**	**Results**	**RL**	**MDL**	**Qualifier**	**Dilution Factor**
Volatile Organics in Air - Mansfield Lab								
Chlorodifluoromethane	ND	0.200	--	ND	0.707	--		1
Propylene	ND	0.500	--	ND	0.861	--		1
Dichlorodifluoromethane	ND	0.200	--	ND	0.989	--		1
Chloromethane	ND	0.200	--	ND	0.413	--		1
Freon-114	ND	0.200	--	ND	1.40	--		1
Methanol	ND	5.00	--	ND	6.55	--		1
Vinyl chloride	ND	0.200	--	ND	0.511	--		1
1,3-Butadiene	ND	0.200	--	ND	0.442	--		1
Butane	ND	0.200	--	ND	0.475	--		1
Bromomethane	ND	0.200	--	ND	0.777	--		1
Chloroethane	ND	0.200	--	ND	0.528	--		1
Ethanol	ND	2.50	--	ND	4.71	--		1
Dichlorofluoromethane	ND	0.200	--	ND	0.842	--		1
Vinyl bromide	ND	0.200	--	ND	0.874	--		1
Acrolein	ND	0.500	--	ND	1.15	--		1
Acetone	ND	1.00	--	ND	2.38	--		1
Acetonitrile	ND	0.200	--	ND	0.336	--		1
Trichlorofluoromethane	ND	0.200	--	ND	1.12	--		1
Isopropanol	ND	0.500	--	ND	1.23	--		1
Acrylonitrile	ND	0.200	--	ND	0.434	--		1
Pentane	ND	0.200	--	ND	0.590	--		1
Ethyl ether	ND	0.200	--	ND	0.606	--		1
1,1-Dichloroethene	ND	0.200	--	ND	0.793	--		1
Tertiary butyl Alcohol	ND	0.500	--	ND	1.52	--		1
Methylene chloride	ND	1.00	--	ND	3.47	--		1

Project Name: BATCH CANISTER CERTIFICATION **Lab Number:** L1400744

Project Number: CANISTER QC BAT **Report Date:** 01/23/14

Air Canister Certification Results

Lab ID: L1400744-02 Date Collected: 01/03/14 17:32

Client ID: CAN 197 SHELF 7 Date Received: 01/04/14

Sample Location: Field Prep: Not Specified

	ppbV			ug/m3				
Parameter	**Results**	**RL**	**MDL**	**Results**	**RL**	**MDL**	**Qualifier**	**Dilution Factor**
Volatile Organics in Air - Mansfield Lab								
3-Chloropropene	ND	0.200	--	ND	0.626	--		1
Carbon disulfide	ND	0.200	--	ND	0.623	--		1
Freon-113	ND	0.200	--	ND	1.53	--		1
trans-1,2-Dichloroethene	ND	0.200	--	ND	0.793	--		1
1,1-Dichloroethane	ND	0.200	--	ND	0.809	--		1
Methyl tert butyl ether	ND	0.200	--	ND	0.721	--		1
Vinyl acetate	ND	0.200	--	ND	0.704	--		1
2-Butanone	ND	0.200	--	ND	0.590	--		1
cis-1,2-Dichloroethene	ND	0.200	--	ND	0.793	--		1
Ethyl Acetate	ND	0.500	--	ND	1.80	--		1
Chloroform	ND	0.200	--	ND	0.977	--		1
Tetrahydrofuran	ND	0.200	--	ND	0.590	--		1
2,2-Dichloropropane	ND	0.200	--	ND	0.924	--		1
1,2-Dichloroethane	ND	0.200	--	ND	0.809	--		1
n-Hexane	ND	0.200	--	ND	0.705	--		1
Diisopropyl ether	ND	0.200	--	ND	0.836	--		1
tert-Butyl Ethyl Ether	ND	0.200	--	ND	0.836	--		1
1,1,1-Trichloroethane	ND	0.200	--	ND	1.09	--		1
1,1-Dichloropropene	ND	0.200	--	ND	0.908	--		1
Benzene	ND	0.200	--	ND	0.639	--		1
Carbon tetrachloride	ND	0.200	--	ND	1.26	--		1
Cyclohexane	ND	0.200	--	ND	0.688	--		1
tert-Amyl Methyl Ether	ND	0.200	--	ND	0.836	--		1
Dibromomethane	ND	0.200	--	ND	1.42	--		1
1,2-Dichloropropane	ND	0.200	--	ND	0.924	--		1
Bromodichloromethane	ND	0.200	--	ND	1.34	--		1
1,4-Dioxane	ND	0.200	--	ND	0.721	--		1
Trichloroethene	ND	0.200	--	ND	1.07	--		1

Project Name: BATCH CANISTER CERTIFICATION **Lab Number:** L1400744

Project Number: CANISTER QC BAT **Report Date:** 01/23/14

Air Canister Certification Results

Lab ID: L1400744-02 Date Collected: 01/03/14 17:32

Client ID: CAN 197 SHELF 7 Date Received: 01/04/14

Sample Location: Field Prep: Not Specified

Parameter	ppbV Results	ppbV RL	ppbV MDL	ug/m3 Results	ug/m3 RL	ug/m3 MDL	Qualifier	Dilution Factor
Volatile Organics in Air - Mansfield Lab								
2,2,4-Trimethylpentane	ND	0.200	--	ND	0.934	--		1
Methyl Methacrylate	ND	0.500	--	ND	2.05	--		1
Heptane	ND	0.200	--	ND	0.820	--		1
cis-1,3-Dichloropropene	ND	0.200	--	ND	0.908	--		1
4-Methyl-2-pentanone	ND	0.200	--	ND	0.820	--		1
trans-1,3-Dichloropropene	ND	0.200	--	ND	0.908	--		1
1,1,2-Trichloroethane	ND	0.200	--	ND	1.09	--		1
Toluene	ND	0.200	--	ND	0.754	--		1
1,3-Dichloropropane	ND	0.200	--	ND	0.924	--		1
2-Hexanone	ND	0.200	--	ND	0.820	--		1
Dibromochloromethane	ND	0.200	--	ND	1.70	--		1
1,2-Dibromoethane	ND	0.200	--	ND	1.54	--		1
Butyl acetate	ND	0.500	--	ND	2.38	--		1
Octane	ND	0.200	--	ND	0.934	--		1
Tetrachloroethene	ND	0.200	--	ND	1.36	--		1
1,1,1,2-Tetrachloroethane	ND	0.200	--	ND	1.37	--		1
Chlorobenzene	ND	0.200	--	ND	0.921	--		1
Ethylbenzene	ND	0.200	--	ND	0.869	--		1
p/m-Xylene	ND	0.400	--	ND	1.74	--		1
Bromoform	ND	0.200	--	ND	2.07	--		1
Styrene	ND	0.200	--	ND	0.852	--		1
1,1,2,2-Tetrachloroethane	ND	0.200	--	ND	1.37	--		1
o-Xylene	ND	0.200	--	ND	0.869	--		1
1,2,3-Trichloropropane	ND	0.200	--	ND	1.21	--		1
Nonane	ND	0.200	--	ND	1.05	--		1
Isopropylbenzene	ND	0.200	--	ND	0.983	--		1
Bromobenzene	ND	0.200	--	ND	0.793	--		1
2-Chlorotoluene	ND	0.200	--	ND	1.04	--		1

Project Name: BATCH CANISTER CERTIFICATION **Lab Number:** L1400744

Project Number: CANISTER QC BAT **Report Date:** 01/23/14

Air Canister Certification Results

Lab ID: L1400744-02 Date Collected: 01/03/14 17:32

Client ID: CAN 197 SHELF 7 Date Received: 01/04/14

Sample Location: Field Prep: Not Specified

Parameter	ppbV Results	ppbV RL	ppbV MDL	ug/m3 Results	ug/m3 RL	ug/m3 MDL	Qualifier	Dilution Factor
Volatile Organics in Air - Mansfield Lab								
n-Propylbenzene	ND	0.200	--	ND	0.983	--		1
4-Chlorotoluene	ND	0.200	--	ND	1.04	--		1
4-Ethyltoluene	ND	0.200	--	ND	0.983	--		1
1,3,5-Trimethylbenzene	ND	0.200	--	ND	0.983	--		1
tert-Butylbenzene	ND	0.200	--	ND	1.10	--		1
1,2,4-Trimethylbenzene	ND	0.200	--	ND	0.983	--		1
Decane	ND	0.200	--	ND	1.16	--		1
Benzyl chloride	ND	0.200	--	ND	1.04	--		1
1,3-Dichlorobenzene	ND	0.200	--	ND	1.20	--		1
1,4-Dichlorobenzene	ND	0.200	--	ND	1.20	--		1
sec-Butylbenzene	ND	0.200	--	ND	1.10	--		1
p-Isopropyltoluene	ND	0.200	--	ND	1.10	--		1
1,2-Dichlorobenzene	ND	0.200	--	ND	1.20	--		1
n-Butylbenzene	ND	0.200	--	ND	1.10	--		1
1,2-Dibromo-3-chloropropane	ND	0.200	--	ND	1.93	--		1
Undecane	ND	0.200	--	ND	1.28	--		1
Dodecane	ND	0.200	--	ND	1.39	--		1
1,2,4-Trichlorobenzene	ND	0.200	--	ND	1.48	--		1
Naphthalene	ND	0.200	--	ND	1.05	--		1
1,2,3-Trichlorobenzene	ND	0.200	--	ND	1.48	--		1
Hexachlorobutadiene	ND	0.200	--	ND	2.13	--		1

	Results	Qualifier	Units	RDL	Dilution Factor
Tentatively Identified Compounds					
No Tentatively Identified Compounds					

Project Name: BATCH CANISTER CERTIFICATION **Lab Number:** L1400744

Project Number: CANISTER QC BAT **Report Date:** 01/23/14

Air Canister Certification Results

Lab ID: L1400744-02 Date Collected: 01/03/14 17:32

Client ID: CAN 197 SHELF 7 Date Received: 01/04/14

Sample Location: Field Prep: Not Specified

Parameter	ppbV Results	ppbV RL	ppbV MDL	ug/m3 Results	ug/m3 RL	ug/m3 MDL	Qualifier	Dilution Factor
Volatile Organics in Air - Mansfield Lab								

Internal Standard	% Recovery	Qualifier	Acceptance Criteria
1,4-Difluorobenzene	85		60-140
Bromochloromethane	85		60-140
chlorobenzene-d5	86		60-140

Project Name: BATCH CANISTER CERTIFICATION **Lab Number:** L1400744

Project Number: CANISTER QC BAT **Report Date:** 01/23/14

Air Canister Certification Results

Lab ID:	L1400744-02	Date Collected:	01/03/14 17:32
Client ID:	CAN 197 SHELF 7	Date Received:	01/04/14
Sample Location:		Field Prep:	Not Specified
Matrix:	Air		
Anaytical Method:	48,TO-15-SIM		
Analytical Date:	01/10/14 17:35		
Analyst:	RY		

	ppbV			ug/m3				
Parameter	**Results**	**RL**	**MDL**	**Results**	**RL**	**MDL**	**Qualifier**	**Dilution Factor**
Volatile Organics in Air by SIM - Mansfield Lab								
Dichlorodifluoromethane	ND	0.050	--	ND	0.247	--		1
Chloromethane	ND	0.500	--	ND	1.03	--		1
Freon-114	ND	0.050	--	ND	0.349	--		1
Vinyl chloride	ND	0.020	--	ND	0.051	--		1
1,3-Butadiene	ND	0.020	--	ND	0.044	--		1
Bromomethane	ND	0.020	--	ND	0.078	--		1
Chloroethane	ND	0.020	--	ND	0.053	--		1
Acetone	ND	2.00	--	ND	4.75	--		1
Trichlorofluoromethane	ND	0.050	--	ND	0.281	--		1
Acrylonitrile	ND	0.500	--	ND	1.09	--		1
1,1-Dichloroethene	ND	0.020	--	ND	0.079	--		1
Methylene chloride	ND	1.00	--	ND	3.47	--		1
Freon-113	ND	0.050	--	ND	0.383	--		1
Halothane	ND	0.050	--	ND	0.404	--		1
trans-1,2-Dichloroethene	ND	0.020	--	ND	0.079	--		1
1,1-Dichloroethane	ND	0.020	--	ND	0.081	--		1
Methyl tert butyl ether	ND	0.020	--	ND	0.072	--		1
2-Butanone	ND	0.500	--	ND	1.47	--		1
cis-1,2-Dichloroethene	ND	0.020	--	ND	0.079	--		1
Chloroform	ND	0.020	--	ND	0.098	--		1
1,2-Dichloroethane	ND	0.020	--	ND	0.081	--		1
1,1,1-Trichloroethane	ND	0.020	--	ND	0.109	--		1
Benzene	ND	0.100	--	ND	0.319	--		1
Carbon tetrachloride	ND	0.020	--	ND	0.126	--		1
1,2-Dichloropropane	ND	0.020	--	ND	0.092	--		1

Project Name: BATCH CANISTER CERTIFICATION **Lab Number:** L1400744

Project Number: CANISTER QC BAT **Report Date:** 01/23/14

Air Canister Certification Results

Lab ID: L1400744-02 Date Collected: 01/03/14 17:32

Client ID: CAN 197 SHELF 7 Date Received: 01/04/14

Sample Location: Field Prep: Not Specified

Parameter	ppbV Results	ppbV RL	ppbV MDL	ug/m3 Results	ug/m3 RL	ug/m3 MDL	Qualifier	Dilution Factor
Volatile Organics in Air by SIM - Mansfield Lab								
Bromodichloromethane	ND	0.020	--	ND	0.134	--		1
1,4-Dioxane	ND	0.100	--	ND	0.360	--		1
Trichloroethene	ND	0.020	--	ND	0.107	--		1
cis-1,3-Dichloropropene	ND	0.020	--	ND	0.091	--		1
4-Methyl-2-pentanone	ND	0.500	--	ND	2.05	--		1
trans-1,3-Dichloropropene	ND	0.020	--	ND	0.091	--		1
1,1,2-Trichloroethane	ND	0.020	--	ND	0.109	--		1
Toluene	ND	0.050	--	ND	0.188	--		1
Dibromochloromethane	ND	0.020	--	ND	0.170	--		1
1,2-Dibromoethane	ND	0.020	--	ND	0.154	--		1
Tetrachloroethene	ND	0.020	--	ND	0.136	--		1
1,1,1,2-Tetrachloroethane	ND	0.020	--	ND	0.137	--		1
Chlorobenzene	ND	0.020	--	ND	0.092	--		1
Ethylbenzene	ND	0.020	--	ND	0.087	--		1
p/m-Xylene	ND	0.040	--	ND	0.174	--		1
Bromoform	ND	0.020	--	ND	0.207	--		1
Styrene	ND	0.020	--	ND	0.085	--		1
1,1,2,2-Tetrachloroethane	ND	0.020	--	ND	0.137	--		1
o-Xylene	ND	0.020	--	ND	0.087	--		1
Isopropylbenzene	ND	0.500	--	ND	2.46	--		1
4-Ethyltoluene	ND	0.020	--	ND	0.098	--		1
1,3,5-Trimethybenzene	ND	0.020	--	ND	0.098	--		1
1,2,4-Trimethylbenzene	ND	0.020	--	ND	0.098	--		1
1,3-Dichlorobenzene	ND	0.020	--	ND	0.120	--		1
1,4-Dichlorobenzene	ND	0.020	--	ND	0.120	--		1
sec-Butylbenzene	ND	0.500	--	ND	2.74	--		1
p-Isopropyltoluene	ND	0.500	--	ND	2.74	--		1
1,2-Dichlorobenzene	ND	0.020	--	ND	0.120	--		1

Project Name: BATCH CANISTER CERTIFICATION **Lab Number:** L1400744

Project Number: CANISTER QC BAT **Report Date:** 01/23/14

Air Canister Certification Results

Lab ID: L1400744-02 Date Collected: 01/03/14 17:32

Client ID: CAN 197 SHELF 7 Date Received: 01/04/14

Sample Location: Field Prep: Not Specified

	ppbV			ug/m3				
Parameter	**Results**	**RL**	**MDL**	**Results**	**RL**	**MDL**	**Qualifier**	**Dilution Factor**
Volatile Organics in Air by SIM - Mansfield Lab								
n-Butylbenzene	ND	0.500	--	ND	2.74	--		1
1,2,4-Trichlorobenzene	ND	0.050	--	ND	0.371	--		1
Naphthalene	ND	0.050	--	ND	0.262	--		1
1,2,3-Trichlorobenzene	ND	0.050	--	ND	0.371	--		1
Hexachlorobutadiene	ND	0.050	--	ND	0.533	--		1

Internal Standard	**% Recovery**	**Qualifier**	**Acceptance Criteria**
1,4-difluorobenzene	92		60-140
bromochloromethane	92		60-140
chlorobenzene-d5	90		60-140

Project Name: NBHS IRA PSWS
Project Number: 115058

Lab Number: L1401595
Report Date: 01/23/14

Sample Receipt and Container Information

Were project specific reporting limits specified? YES

Reagent H2O Preserved Vials Frozen on: NA

Cooler Information **Custody Seal**

Cooler	
N/A	Absent

Container Information

Container ID	Container Type	Cooler	pH	Temp deg C	Pres	Seal	Analysis(*)
L1401595-01A	Canister - 2.7 Liter	N/A	N/A		Y	Absent	MCP-TO15(30)
L1401595-02A	Canister - 2.7 Liter	N/A	N/A		Y	Absent	MCP-TO15-SIM(30)

*Values in parentheses indicate holding time in days

Project Name:	NBHS IRA PSWS	**Lab Number:**	L1401595
Project Number:	115058	**Report Date:**	01/23/14

GLOSSARY

Acronyms

EDL	- Estimated Detection Limit: This value represents the level to which target analyte concentrations are reported as estimated values, when those target analyte concentrations are quantified below the reporting limit (RL). The EDL includes any adjustments from dilutions, concentrations or moisture content, where applicable. The use of EDLs is specific to the analysis of PAHs using Solid-Phase Microextraction (SPME).
EPA	- Environmental Protection Agency.
LCS	- Laboratory Control Sample: A sample matrix, free from the analytes of interest, spiked with verified known amounts of analytes or a material containing known and verified amounts of analytes.
LCSD	- Laboratory Control Sample Duplicate: Refer to LCS.
LFB	- Laboratory Fortified Blank: A sample matrix, free from the analytes of interest, spiked with verified known amounts of analytes or a material containing known and verified amounts of analytes.
MDL	- Method Detection Limit: This value represents the level to which target analyte concentrations are reported as estimated values, when those target analyte concentrations are quantified below the reporting limit (RL). The MDL includes any adjustments from dilutions, concentrations or moisture content, where applicable.
MS	- Matrix Spike Sample: A sample prepared by adding a known mass of target analyte to a specified amount of matrix sample for which an independent estimate of target analyte concentration is available.
MSD	- Matrix Spike Sample Duplicate: Refer to MS.
NA	- Not Applicable.
NC	- Not Calculated: Term is utilized when one or more of the results utilized in the calculation are non-detect at the parameter's reporting unit.
NI	- Not Ignitable.
RL	- Reporting Limit: The value at which an instrument can accurately measure an analyte at a specific concentration. The RL includes any adjustments from dilutions, concentrations or moisture content, where applicable.
RPD	- Relative Percent Difference: The results from matrix and/or matrix spike duplicates are primarily designed to assess the precision of analytical results in a given matrix and are expressed as relative percent difference (RPD). Values which are less than five times the reporting limit for any individual parameter are evaluated by utilizing the absolute difference between the values; although the RPD value will be provided in the report.
SRM	- Standard Reference Material: A reference sample of a known or certified value that is of the same or similar matrix as the associated field samples.

Footnotes

1	- The reference for this analyte should be considered modified since this analyte is absent from the target analyte list of the original method.

Terms

Analytical Method: Both the document from which the method originates and the analytical reference method. (Example: EPA 8260B is shown as 1,8260B.) The codes for the reference method documents are provided in the References section of the Addendum.

Data Qualifiers

A	- Spectra identified as "Aldol Condensation Product".
B	- The analyte was detected above the reporting limit in the associated method blank. Flag only applies to associated field samples that have detectable concentrations of the analyte at less than ten times (10x) the concentration found in the blank. For MCP-related projects, flag only applies to associated field samples that have detectable concentrations of the analyte at less than ten times (10x) the concentration found in the blank. For DOD-related projects, flag only applies to associated field samples that have detectable concentrations of the analyte at less than ten times (10x) the concentration found in the blank AND the analyte was detected above one-half the reporting limit (or above the reporting limit for common lab contaminants) in the associated method blank. For NJ-Air-related projects, flag only applies to associated field samples that have detectable concentrations of the analyte above the reporting limit.
C	- Co-elution: The target analyte co-elutes with a known lab standard (i.e. surrogate, internal standards, etc.) for co-extracted analyses.
D	- Concentration of analyte was quantified from diluted analysis. Flag only applies to field samples that have detectable concentrations of the analyte.
E	- Concentration of analyte exceeds the range of the calibration curve and/or linear range of the instrument.
G	- The concentration may be biased high due to matrix interferences (i.e, co-elution) with non-target compound(s). The result should be considered estimated.
H	- The analysis of pH was performed beyond the regulatory-required holding time of 15 minutes from the time of sample collection.
I	- The lower value for the two columns has been reported due to obvious interference.

Report Format: Data Usability Report

Project Name:	NBHS IRA PSWS	**Lab Number:**	L1401595
Project Number:	115058	**Report Date:**	01/23/14

Data Qualifiers

M - Reporting Limit (RL) exceeds the MCP CAM Reporting Limit for this analyte.

NJ - Presumptive evidence of compound. This represents an estimated concentration for Tentatively Identified Compounds (TICs), where the identification is based on a mass spectral library search.

P - The RPD between the results for the two columns exceeds the method-specified criteria.

Q - The quality control sample exceeds the associated acceptance criteria. For DOD-related projects, LCS and/or Continuing Calibration Standard exceedences are also qualified on all associated sample results. Note: This flag is not applicable for matrix spike recoveries when the sample concentration is greater than 4x the spike added or for batch duplicate RPD when the sample concentrations are less than 5x the RL. (Metals only.)

R - Analytical results are from sample re-analysis.

RE - Analytical results are from sample re-extraction.

S - Analytical results are from modified screening analysis.

Report Format: Data Usability Report

Project Name: NBHS IRA PSWS **Lab Number:** L1401595
Project Number: 115058 **Report Date:** 01/23/14

REFERENCES

101 Compendium of Methods for the Determination of Toxic Organic Compounds in Ambient Air (EPA/625/R-96/010b:January 1999) with QC Requirements & Performance Standards for the Analysis of TO-15 under the Massachusetts Contingency Plan, WSC-CAM-IXB, July 2010.

LIMITATION OF LIABILITIES

Alpha Analytical performs services with reasonable care and diligence normal to the analytical testing laboratory industry. In the event of an error, the sole and exclusive responsibility of Alpha Analytical shall be to re-perform the work at it's own expense. In no event shall Alpha Analytical be held liable for any incidental, consequential or special damages, including but not limited to, damages in any way connected with the use of, interpretation of, information or analysis provided by Alpha Analytical.

We strongly urge our clients to comply with EPA protocol regarding sample volume, preservation, cooling, containers, sampling procedures, holding time and splitting of samples in the field.

Certification Information

Last revised December 11, 2013

The following analytes are not included in our NELAP Scope of Accreditation:

Westborough Facility
EPA 524.2: Acetone, 2-Butanone (Methyl ethyl ketone (MEK)), Tert-butyl alcohol, 2-Hexanone, Tetrahydrofuran, 1,3,5-Trichlorobenzene, 4-Methyl-2-pentanone (MIBK), Carbon disulfide, Diethyl ether.
EPA 8260C: 1,2,4,5-Tetramethylbenzene, 4-Ethyltoluene, Iodomethane (methyl iodide), Methyl methacrylate, Azobenzene.
EPA 8330A/B: PETN, Picric Acid, Nitroglycerine, 2,6-DANT, 2,4-DANT.
EPA 8270D: 1-Methylnaphthalene, Dimethylnaphthalene,1,4-Diphenylhydrazine.
EPA 625: 4-Chloroaniline, 4-Methylphenol.
SM4500: Soil: Total Phosphorus, TKN, NO2, NO3.
EPA 9071: Total Petroleum Hydrocarbons, Oil & Grease.

Mansfield Facility
EPA 8270D: Biphenyl.
EPA TO-15: Halothane, 2,4,4-Trimethyl-2-pentene, 2,4,4-Trimethyl-1-pentene, Thiophene, 2-Methylthiophene, 3-Methylthiophene, 2-Ethylthiophene, 1,2,3-Trimethylbenzene, Indan, Indene, 1,2,4,5-Tetramethylbenzene, Benzothiophene, 1-Methylnaphthalene.

The following analytes are included in our Massachusetts DEP Scope of Accreditation, Westborough Facility:

Drinking Water
EPA 200.8: Sb,As,Ba,Be,Cd,Cr,Cu,Pb,Ni,Se,Tl; **EPA 200.7**: Ba,Be,Ca,Cd,Cr,Cu,Na; **EPA 245.1:** Mercury;
EPA 300.0: Nitrate-N, Fluoride, Sulfate; **EPA 353.2**: Nitrate-N, Nitrite-N; **SM4500NO3-F**: Nitrate-N, Nitrite-N; **SM4500F-C, SM4500CN-CE, EPA 180.1, SM2130B, SM4500Cl-D, SM2320B, SM2540C, SM4500H-B**
EPA 332: Perchlorate.
Microbiology: **SM9215B; SM9223-P/A, SM9223B-Colilert-QT, Enterolert-QT.**

Non-Potable Water
EPA 200.8: Al,Sb,As,Be,Cd,Cr,Cu,Pb,Mn,Ni,Se,Ag,Tl,Zn;
EPA 200.7: Al,Sb,As,Be,Cd,Ca,Cr,Co,Cu,Fe,Pb,Mg,Mn,Mo,Ni,K,Se,Ag,Na,Sr,Ti,Tl,V,Zn;
EPA 245.1, SM4500H,B, EPA 120.1, SM2510B, SM2540C, SM2340B, SM2320B, SM4500CL-E, SM4500F-BC, SM426C, SM4500NH3-BH, **EPA 350.1**: Ammonia-N, **LACHAT 10-107-06-1-B**: Ammonia-N, **SM4500NO3-F,**
EPA 353.2: Nitrate-N**, SM4500NH3-BC-NES, EPA 351.1, SM4500P-E, SM4500P-B, E, SM5220D, EPA 410.4, SM5210B, SM5310C, SM4500CL-D, EPA 1664, SM14 510AC, EPA 420.1, SM4500-CN-CE, SM2540D.**
EPA 624: Volatile Halocarbons & Aromatics,
EPA 608: Chlordane, Toxaphene, Aldrin, alpha-BHC, beta-BHC, gamma-BHC, delta-BHC, Dieldrin, DDD, DDE, DDT, Endosulfan I, Endosulfan II, Endosulfan sulfate, Endrin, Endrin Aldehyde, Heptachlor, Heptachlor Epoxide, PCBs
EPA 625: SVOC (Acid/Base/Neutral Extractables), **EPA 600/4-81-045**: PCB-Oil.
Microbiology: **SM9223B-Colilert-QT; Enterolert-QT, SM9222D-MF**.

For a complete listing of analytes and methods, please contact your Alpha Project Manager.

AIR ANALYSIS

PAGE 1 OF 1

CHAIN OF CUSTODY

ALPHA ANALYTICAL
320 Forbes Blvd, Mansfield, MA 02048
TEL: 508-822-9300 FAX: 508-822-3288

Date Rec'd in Lab:

ALPHA Job #: L1401595

Client Information

Client: TRC
Address: 650 Suffolk St
Lowell, MA 01854
Phone: 978-970-5600
Fax:
Email: aleonard@TRCSolutions.com
asullivan
☐ These samples have been previously analyzed by Alpha

Project Information

Project Name: NBHS IRA PSWS
Project Location: New Bedford, MA
Project #: 115058
Project Manager: Dave Sullivan
ALPHA Quote #:

Turn-Around Time

☒ Standard ☐ RUSH (only confirmed if pre-approved!)

Date Due: Time:

Report Information - Data Deliverables

☐ FAX
☐ ADEx
Criteria Checker:
(Default based on Regulatory Criteria Indicated)
Other Formats:
☒ EMAIL (standard pdf report)
☐ Additional Deliverables:
Report to: (if different than Project Manager)

Billing Information

☐ Same as Client info PO #: C115058

Regulatory Requirements/Report Limits

State/Fed	Program	Criteria
MA	MCP	

Other Project Specific Requirements/Comments:

All Columns Below Must Be Filled Out

ALPHA Lab ID (Lab Use Only)	Sample ID	Collection Date	Start Time	End Time	Initial Vacuum	Final Vacuum	Sample Matrix*	Sampler's Initials	Can Size	I D Can	I D - Flow Controller	TO-14A by TO-15	TO-15	TO-15 SIM	APH	FIXED GASES	TO-13A	TO-4 / TO-10	Sample Comments (i.e. PID)
1595-01	Vapor Inlet	1/16/14	1431	1441	-29.3	-2.39	SV	SB	2.7L	483	0040		X						
-02	Vapor Outlet	1/16/14	1429	1439	-29.3	-2.06	SV	SB	2.7	150	0501			X					

Container Type: CS CS

*SAMPLE MATRIX CODES
AA = Ambient Air (Indoor/Outdoor)
SV = Soil Vapor/Landfill Gas/SVE
Other = Please Specify

Relinquished By:	Date/Time	Received By:	Date/Time:
Stephen P Brown	1/16/14 1632	[illegible]	1/16/14 1632
[illegible]	1/17/14 1730	[illegible]	1/17/14 0900

Please print clearly, legibly and completely. Samples can not be logged in and turnaround time clock will not start until any ambiguities are resolved. BY EXECUTING THIS COC, THE CLIENT HAS READ AND AGREES TO BE BOUND BY ALPHA'S TERMS & CONDITIONS. (See reverse side.)

Form No: 101-02 (19-Jun-09)

ANALYTICAL REPORT

Lab Number:	L1403549
Client:	TRC Environmental Consultants Wannalancit Mills 650 Suffolk Street Lowell, MA 01854
ATTN:	David Sullivan
Phone:	(978) 656-3565
Project Name:	NBHS IRA PSWS
Project Number:	115058
Report Date:	02/28/14

The original project report/data package is held by Alpha Analytical. This report/data package is paginated and should be reproduced only in its entirety. Alpha Analytical holds no responsibility for results and/or data that are not consistent with the original.

Certifications & Approvals: NY (11627), CT (PH-0141), NH (2206), NJ NELAP (MA015), RI (LAO00299), PA (68-02089), LA NELAP (03090), FL (E87814), TX (T104704419), WA (C954), DOD (L2217.01), USDA (Permit #P330-11-00109), US Army Corps of Engineers.

320 Forbes Boulevard, Mansfield, MA 02048-1806
508-822-9300 (Fax) 508-822-3288 800-624-9220 - www.alphalab.com

Project Name: NBHS IRA PSWS
Project Number: 115058

Lab Number: L1403549
Report Date: 02/28/14

Alpha Sample ID	Client ID	Sample Location	Collection Date/Time
L1403549-01	VAPOR INLET	NEW BEDFORD, MA	02/14/14 14:48
L1403549-02	VAPOR OUTLET	NEW BEDFORD, MA	02/14/14 14:52

Project Name: NBHS IRA PSWS **Lab Number:** L1403549
Project Number: 115058 **Report Date:** 02/28/14

Case Narrative

The samples were received in accordance with the Chain of Custody and no significant deviations were encountered during the preparation or analysis unless otherwise noted. Sample Receipt, Container Information, and the Chain of Custody are located at the back of the report.

Results contained within this report relate only to the samples submitted under this Alpha Lab Number and meet all of the requirements of NELAC, for all NELAC accredited parameters. The data presented in this report is organized by parameter (i.e. VOC, SVOC, etc.). Sample specific Quality Control data (i.e. Surrogate Spike Recovery) is reported at the end of the target analyte list for each individual sample, followed by the Laboratory Batch Quality Control at the end of each parameter. If a sample was re-analyzed or re-extracted due to a required quality control corrective action and if both sets of data are reported, the Laboratory ID of the re-analysis or re-extraction is designated with an "R" or "RE", respectively. When multiple Batch Quality Control elements are reported (e.g. more than one LCS), the associated samples for each element are noted in the grey shaded header line of each data table. Any Laboratory Batch, Sample Specific % recovery or RPD value that is outside the listed Acceptance Criteria is bolded in the report. Performance criteria for CAM and RCP methods allow for some LCS compound failures to occur and still be within method compliance. In these instances, the specific failures are not narrated but are noted in the associated QC table. This information is also incorporated in the Data Usability format for our Data Merger tool where it can be reviewed along with any associated usability implications. Soil/sediments, solids and tissues are reported on a dry weight basis unless otherwise noted. Definitions of all data qualifiers and acronyms used in this report are provided in the Glossary located at the back of the report.

In reference to questions H (CAM) or 4 (RCP) when "NO" is checked, the performance criteria for CAM and RCP methods allow for some quality control failures to occur and still be within method compliance. In these instances the specific failure is not narrated but noted in the associated QC table. The information is also incorporated in the Data Usability format of our Data Merger tool where it can be reviewed along with any associated usability implications.

Please see the associated ADEx data file for a comparison of laboratory reporting limits that were achieved with the regulatory Numerical Standards requested on the Chain of Custody.

HOLD POLICY
For samples submitted on hold, Alpha's policy is to hold samples (with the exception of Air canisters) free of charge for 21 calendar days from the date the project is completed. After 21 calendar days, we will dispose of all samples submitted including those put on hold unless you have contacted your Client Service Representative and made arrangements for Alpha to continue to hold the samples. Air canisters will be disposed after 3 business days from the date the project is completed.

Please contact Client Services at 800-624-9220 with any questions.

Project Name:	NBHS IRA PSWS	**Lab Number:**	L1403549
Project Number:	115058	**Report Date:**	02/28/14

Case Narrative (continued)

PCBs in Air

Sample L1403549-01: The peaks present match the retention time of Aroclor 1248 however the chromatographic pattern is not an identical match.

The results in ug/m3 are attached as an addendum to the end of the summary report.

I, the undersigned, attest under the pains and penalties of perjury that, to the best of my knowledge and belief and based upon my personal inquiry of those responsible for providing the information contained in this analytical report, such information is accurate and complete. This certificate of analysis is not complete unless this page accompanies any and all pages of this report.

Authorized Signature: Elizabeth Porta

Title: Technical Director/Representative

Date: 02/28/14

AIR

Project Name: NBHS IRA PSWS
Project Number: 115058
Lab Number: L1403549
Report Date: 02/28/14

SAMPLE RESULTS

Lab ID:	L1403549-01	Date Collected:	02/14/14 14:48
Client ID:	VAPOR INLET	Date Received:	02/14/14
Sample Location:	NEW BEDFORD, MA	Field Prep:	Not Specified
Matrix:	Air Media	Extraction Method:	EPA 3540C
Analytical Method:	48,TO-10A	Extraction Date:	02/18/14 15:20
Analytical Date:	02/19/14 18:03		
Analyst:	JS		

Parameter	Result	Qualifier	Units	RL	MDL	Dilution Factor	Column
PCB Aroclors in Air - Mansfield Lab							
Aroclor 1016	ND		ng/cart	30.0	--	1	A
Aroclor 1221	ND		ng/cart	100	--	1	A
Aroclor 1232	ND		ng/cart	30.0	--	1	A
Aroclor 1242	ND		ng/cart	20.0	--	1	A
Aroclor 1248	320		ng/cart	20.0	--	1	B
Aroclor 1254	ND		ng/cart	20.0	--	1	A
Aroclor 1260	ND		ng/cart	20.0	--	1	A
Aroclor 1262	ND		ng/cart	20.0	--	1	A
Aroclor 1268	ND		ng/cart	20.0	--	1	A

Surrogate	% Recovery	Qualifier	Acceptance Criteria	Column
Tetrachloro-meta-Xylene	81		60-120	A
Decachlorobiphenyl	75		60-120	A
Tetrachloro-meta-Xylene	83		60-120	B
Decachlorobiphenyl	79		60-120	B

Project Name: NBHS IRA PSWS
Project Number: 115058
Lab Number: L1403549
Report Date: 02/28/14

SAMPLE RESULTS

Lab ID:	L1403549-02	Date Collected:	02/14/14 14:52
Client ID:	VAPOR OUTLET	Date Received:	02/14/14
Sample Location:	NEW BEDFORD, MA	Field Prep:	Not Specified
Matrix:	Air Media	Extraction Method:	EPA 3540C
Analytical Method:	48,TO-10A	Extraction Date:	02/18/14 15:20
Analytical Date:	02/19/14 18:33		
Analyst:	JS		

Parameter	Result	Qualifier	Units	RL	MDL	Dilution Factor	Column
PCB Aroclors in Air - Mansfield Lab							
Aroclor 1016	ND		ng/cart	30.0	--	1	A
Aroclor 1221	ND		ng/cart	100	--	1	A
Aroclor 1232	ND		ng/cart	30.0	--	1	A
Aroclor 1242	ND		ng/cart	20.0	--	1	A
Aroclor 1248	ND		ng/cart	20.0	--	1	A
Aroclor 1254	ND		ng/cart	20.0	--	1	A
Aroclor 1260	ND		ng/cart	20.0	--	1	A
Aroclor 1262	ND		ng/cart	20.0	--	1	A
Aroclor 1268	ND		ng/cart	20.0	--	1	A

Surrogate	% Recovery	Qualifier	Acceptance Criteria	Column
Tetrachloro-meta-Xylene	85		60-120	A
Decachlorobiphenyl	75		60-120	A
Tetrachloro-meta-Xylene	88		60-120	B
Decachlorobiphenyl	82		60-120	B

Project Name: NBHS IRA PSWS
Project Number: 115058

Lab Number: L1403549
Report Date: 02/28/14

Method Blank Analysis
Batch Quality Control

Analytical Method: 48,TO-10A
Analytical Date: 02/19/14 17:02
Analyst: JS

Extraction Method: EPA 3540C
Extraction Date: 02/18/14 15:20

Parameter	Result	Qualifier	Units	RL	MDL	Column
PCB Aroclors in Air - Mansfield Lab for sample(s): 01-02 Batch: WG671000-1						
Aroclor 1016	ND		ng/cart	30.0	--	A
Aroclor 1221	ND		ng/cart	100	--	A
Aroclor 1232	ND		ng/cart	30.0	--	A
Aroclor 1242	ND		ng/cart	20.0	--	A
Aroclor 1248	ND		ng/cart	20.0	--	A
Aroclor 1254	ND		ng/cart	20.0	--	A
Aroclor 1260	ND		ng/cart	20.0	--	A
Aroclor 1262	ND		ng/cart	20.0	--	A
Aroclor 1268	ND		ng/cart	20.0	--	A

Surrogate	%Recovery	Qualifier	Acceptance Criteria	Column
Tetrachloro-meta-Xylene	85		60-120	A
Decachlorobiphenyl	74		60-120	A
Tetrachloro-meta-Xylene	89		60-120	B
Decachlorobiphenyl	80		60-120	B

Lab Control Sample Analysis
Batch Quality Control

Project Name: NBHS IRA PSWS
Project Number: 115058

Lab Number: L1403549
Report Date: 02/28/14

Parameter	LCS %Recovery	Qual	LCSD %Recovery	Qual	%Recovery Limits	RPD	Qual	RPD Limits	Column
PCB Aroclors in Air - Mansfield Lab Associated sample(s): 01-02 Batch: WG671000-2									
Aroclor 1016	71		-		40-140	-		50	A
Aroclor 1260	88		-		40-140	-		50	A

Surrogate	LCS %Recovery	Qual	LCSD %Recovery	Qual	Acceptance Criteria	Column
Tetrachloro-meta-Xylene	83				60-120	A
Decachlorobiphenyl	76				60-120	A
Tetrachloro-meta-Xylene	86				60-120	B
Decachlorobiphenyl	79				60-120	B

Project Name: NBHS IRA PSWS
Project Number: 115058

Lab Number: L1403549
Report Date: 02/28/14

Sample Receipt and Container Information

Were project specific reporting limits specified? YES

Reagent H2O Preserved Vials Frozen on: NA

Cooler Information Custody Seal

Cooler	
A	Absent

Container Information

Container ID	Container Type	Cooler	pH	Temp deg C	Pres	Seal	Analysis(*)
L1403549-01A	PUF Air Cartridge - High or Low	A	N/A	4.2	Y	Absent	A2-TO10-AROCLOR(7)
L1403549-02A	PUF Air Cartridge - High or Low	A	N/A	4.2	Y	Absent	A2-TO10-AROCLOR(7)

*Values in parentheses indicate holding time in days

Project Name:	NBHS IRA PSWS	**Lab Number:**	L1403549
Project Number:	115058	**Report Date:**	02/28/14

GLOSSARY

Acronyms

EDL	- Estimated Detection Limit: This value represents the level to which target analyte concentrations are reported as estimated values, when those target analyte concentrations are quantified below the reporting limit (RL). The EDL includes any adjustments from dilutions, concentrations or moisture content, where applicable. The use of EDLs is specific to the analysis of PAHs using Solid-Phase Microextraction (SPME).
EPA	- Environmental Protection Agency.
LCS	- Laboratory Control Sample: A sample matrix, free from the analytes of interest, spiked with verified known amounts of analytes or a material containing known and verified amounts of analytes.
LCSD	- Laboratory Control Sample Duplicate: Refer to LCS.
LFB	- Laboratory Fortified Blank: A sample matrix, free from the analytes of interest, spiked with verified known amounts of analytes or a material containing known and verified amounts of analytes.
MDL	- Method Detection Limit: This value represents the level to which target analyte concentrations are reported as estimated values, when those target analyte concentrations are quantified below the reporting limit (RL). The MDL includes any adjustments from dilutions, concentrations or moisture content, where applicable.
MS	- Matrix Spike Sample: A sample prepared by adding a known mass of target analyte to a specified amount of matrix sample for which an independent estimate of target analyte concentration is available.
MSD	- Matrix Spike Sample Duplicate: Refer to MS.
NA	- Not Applicable.
NC	- Not Calculated: Term is utilized when one or more of the results utilized in the calculation are non-detect at the parameter's reporting unit.
NI	- Not Ignitable.
RL	- Reporting Limit: The value at which an instrument can accurately measure an analyte at a specific concentration. The RL includes any adjustments from dilutions, concentrations or moisture content, where applicable.
RPD	- Relative Percent Difference: The results from matrix and/or matrix spike duplicates are primarily designed to assess the precision of analytical results in a given matrix and are expressed as relative percent difference (RPD). Values which are less than five times the reporting limit for any individual parameter are evaluated by utilizing the absolute difference between the values; although the RPD value will be provided in the report.
SRM	- Standard Reference Material: A reference sample of a known or certified value that is of the same or similar matrix as the associated field samples.

Footnotes

1	- The reference for this analyte should be considered modified since this analyte is absent from the target analyte list of the original method.

Terms

Analytical Method: Both the document from which the method originates and the analytical reference method. (Example: EPA 8260B is shown as 1,8260B.) The codes for the reference method documents are provided in the References section of the Addendum.

Data Qualifiers

A	- Spectra identified as "Aldol Condensation Product".
B	- The analyte was detected above the reporting limit in the associated method blank. Flag only applies to associated field samples that have detectable concentrations of the analyte at less than ten times (10x) the concentration found in the blank. For MCP-related projects, flag only applies to associated field samples that have detectable concentrations of the analyte at less than ten times (10x) the concentration found in the blank. For DOD-related projects, flag only applies to associated field samples that have detectable concentrations of the analyte at less than ten times (10x) the concentration found in the blank AND the analyte was detected above one-half the reporting limit (or above the reporting limit for common lab contaminants) in the associated method blank. For NJ-Air-related projects, flag only applies to associated field samples that have detectable concentrations of the analyte above the reporting limit.
C	- Co-elution: The target analyte co-elutes with a known lab standard (i.e. surrogate, internal standards, etc.) for co-extracted analyses.
D	- Concentration of analyte was quantified from diluted analysis. Flag only applies to field samples that have detectable concentrations of the analyte.
E	- Concentration of analyte exceeds the range of the calibration curve and/or linear range of the instrument.
G	- The concentration may be biased high due to matrix interferences (i.e, co-elution) with non-target compound(s). The result should be considered estimated.
H	- The analysis of pH was performed beyond the regulatory-required holding time of 15 minutes from the time of sample collection.
I	- The lower value for the two columns has been reported due to obvious interference.

Report Format: Data Usability Report

Project Name:	NBHS IRA PSWS	**Lab Number:**	L1403549
Project Number:	115058	**Report Date:**	02/28/14

Data Qualifiers

M - Reporting Limit (RL) exceeds the MCP CAM Reporting Limit for this analyte.

NJ - Presumptive evidence of compound. This represents an estimated concentration for Tentatively Identified Compounds (TICs), where the identification is based on a mass spectral library search.

P - The RPD between the results for the two columns exceeds the method-specified criteria.

Q - The quality control sample exceeds the associated acceptance criteria. For DOD-related projects, LCS and/or Continuing Calibration Standard exceedences are also qualified on all associated sample results. Note: This flag is not applicable for matrix spike recoveries when the sample concentration is greater than 4x the spike added or for batch duplicate RPD when the sample concentrations are less than 5x the RL. (Metals only.)

R - Analytical results are from sample re-analysis.

RE - Analytical results are from sample re-extraction.

S - Analytical results are from modified screening analysis.

J - Estimated value. This represents an estimated concentration for Tentatively Identified Compounds (TICs).

ND - Not detected at the reporting limit (RL) for the sample.

Report Format: Data Usability Report

REFERENCES

48 Compendium of Methods for the Determination of Toxic Organic Compounds in Ambient Air. Second Edition. EPA/625/R-96/010b, January 1999.

LIMITATION OF LIABILITIES

Alpha Analytical performs services with reasonable care and diligence normal to the analytical testing laboratory industry. In the event of an error, the sole and exclusive responsibility of Alpha Analytical shall be to re-perform the work at it's own expense. In no event shall Alpha Analytical be held liable for any incidental, consequential or special damages, including but not limited to, damages in any way connected with the use of, interpretation of, information or analysis provided by Alpha Analytical.

We strongly urge our clients to comply with EPA protocol regarding sample volume, preservation, cooling, containers, sampling procedures, holding time and splitting of samples in the field.

Certification Information

Last revised December 11, 2013

The following analytes are not included in our NELAP Scope of Accreditation:

Westborough Facility
EPA 524.2: Acetone, 2-Butanone (Methyl ethyl ketone (MEK)), Tert-butyl alcohol, 2-Hexanone, Tetrahydrofuran, 1,3,5-Trichlorobenzene, 4-Methyl-2-pentanone (MIBK), Carbon disulfide, Diethyl ether.
EPA 8260C: 1,2,4,5-Tetramethylbenzene, 4-Ethyltoluene, Iodomethane (methyl iodide), Methyl methacrylate, Azobenzene.
EPA 8330A/B: PETN, Picric Acid, Nitroglycerine, 2,6-DANT, 2,4-DANT.
EPA 8270D: 1-Methylnaphthalene, Dimethylnaphthalene,1,4-Diphenylhydrazine.
EPA 625: 4-Chloroaniline, 4-Methylphenol.
SM4500: Soil: Total Phosphorus, TKN, NO2, NO3.
EPA 9071: Total Petroleum Hydrocarbons, Oil & Grease.

Mansfield Facility
EPA 8270D: Biphenyl.
EPA TO-15: Halothane, 2,4,4-Trimethyl-2-pentene, 2,4,4-Trimethyl-1-pentene, Thiophene, 2-Methylthiophene, 3-Methylthiophene, 2-Ethylthiophene, 1,2,3-Trimethylbenzene, Indan, Indene, 1,2,4,5-Tetramethylbenzene, Benzothiophene, 1-Methylnaphthalene.

The following analytes are included in our Massachusetts DEP Scope of Accreditation, Westborough Facility:

Drinking Water
EPA 200.8: Sb,As,Ba,Be,Cd,Cr,Cu,Pb,Ni,Se,Tl; **EPA 200.7**: Ba,Be,Ca,Cd,Cr,Cu,Na; **EPA 245.1:** Mercury;
EPA 300.0: Nitrate-N, Fluoride, Sulfate; **EPA 353.2**: Nitrate-N, Nitrite-N; **SM4500NO3-F**: Nitrate-N, Nitrite-N; **SM4500F-C, SM4500CN-CE, EPA 180.1, SM2130B, SM4500Cl-D, SM2320B, SM2540C, SM4500H-B**
EPA 332: Perchlorate.
Microbiology: **SM9215B; SM9223-P/A, SM9223B-Colilert-QT, Enterolert-QT.**

Non-Potable Water
EPA 200.8: Al,Sb,As,Be,Cd,Cr,Cu,Pb,Mn,Ni,Se,Ag,Tl,Zn;
EPA 200.7: Al,Sb,As,Be,Cd,Ca,Cr,Co,Cu,Fe,Pb,Mg,Mn,Mo,Ni,K,Se,Ag,Na,Sr,Ti,Tl,V,Zn;
EPA 245.1, SM4500H,B, EPA 120.1, SM2510B, SM2540C, SM2340B, SM2320B, SM4500CL-E, SM4500F-BC, SM426C, SM4500NH3-BH, **EPA 350.1**: Ammonia-N, **LACHAT 10-107-06-1-B**: Ammonia-N, **SM4500NO3-F,**
EPA 353.2: Nitrate-N**, SM4500NH3-BC-NES, EPA 351.1, SM4500P-E, SM4500P-B, E, SM5220D, EPA 410.4, SM5210B, SM5310C, SM4500CL-D, EPA 1664, SM14 510AC, EPA 420.1, SM4500-CN-CE, SM2540D.**
EPA 624: Volatile Halocarbons & Aromatics,
EPA 608: Chlordane, Toxaphene, Aldrin, alpha-BHC, beta-BHC, gamma-BHC, delta-BHC, Dieldrin, DDD, DDE, DDT, Endosulfan I, Endosulfan II, Endosulfan sulfate, Endrin, Endrin Aldehyde, Heptachlor, Heptachlor Epoxide, PCBs
EPA 625: SVOC (Acid/Base/Neutral Extractables), **EPA 600/4-81-045**: PCB-Oil.
Microbiology: **SM9223B-Colilert-QT; Enterolert-QT, SM9222D-MF**.

For a complete listing of analytes and methods, please contact your Alpha Project Manager.

AIR ANALYSIS - SORBENT MEDIA
CHAIN OF CUSTODY

ALPHA ANALYTICAL

Page 1 of 1

Date Rec'd in Lab 2-15-14

ALPHA Job # L1403558/49

Westborough, MA TEL: 508-898-9220 FAX: 508-822-3288
Mansfield, MA TEL: 508-822-9300 508-822-3288

Client Information
Client: TRC
Address: 650 Suffolk St. Lowell, MA 01854
Phone: 978-970-5600
Fax:
Email: aleonard@trcsolutions.com dsullivan

Project Information
Project Name: NBHS IRA PSWS
Project Location: New Bedford, MA
Project # 115058
(Use Project name as Project #) ☐
Project Manager: David Sullivan
ALPHA Quote #:

Turn-Around Time
Standard ☒ Due Date:
Rush (only if pre approved) ☐ Time:

Report Information - Data Deliverables
☐ FAX
☐ ADEx
Criteria Checker:
Other Formats:
☒ EMAIL
☐ Add'l Deliverables
Report to: (if different than Project Manager)

Billing Information
☐ Same as Client Info
PO # C115058

Regulatory Requirements/Report Limits

State/Fed	Program	Criteria
MA	MCP	

These samples have been previously analyzed by Alpha ☐

Other Project Specific Requirements/ Comments/Detection Limits
Refer to Mellisa Gulli for RL's discussed with Matt Oliveira

For PCBs, selection is REQUIRED:
☐ Congeners
☐ Homologs
☒ Aroclors (Low Vol only)

ANALYSIS

NOTE: For metals, please specify elements of interest and media type.
☐ PM-10
☐ TSP
☐ MCE

All Columns Below Must Be Filled Out

ALPHA Lab ID (Lab Use Only)	Sample ID	Collection Date	Start Time	End Time	Flow Rate (L/min)	Total Volume (L)	Sample Matrix*	Sampler's Initials	Media ID# (1)	TO-13A	PCBs (High Vol)	PCBs (Low Vol)	TO-11A	Hg via NIOSH 6009 Mod.	Metals	TO-17	PCB via Soxhlet	Sample Comments (i.e. PID)
3561 3549-01	Vapor Inlet	2/14/14	1048	1448	5 L/min	1,200	SV	KDJ	LP 332								X	
-02	Vapor Outlet	2/14/14	1052	1452	5 L/min	1,200	SV	KDJ	LP 348								X	
Media Type										P	P	P	D	T	F	T	P	

* SAMPLE MATRIX CODES
AA = Ambient Air (Indoor/Outdoor)
SV = Soil Vapor/Landfill Gas/SVE
Other = Please Specify

(1) Required for PUF cartridges, PM-10 and TSP filters and TO-17 sorbent tubes.

Media Code
D = DNPH Cartridge
F = Filter
P = PUF Cartridge
T = Sorbent Tube
O = Other

Relinquished By:	Date/Time	Received By:	Date/Time
Kevin [illegible]	2/14/14 15:40	T. Hudek	2/14/14 1540
T. Hudek	2/14/14 1745	[illegible]	2/14/14 17:45
[illegible]	2/15/14 0400	Marshfield lab	2/15/14 04:00

Please print clearly, legibly and completely. Samples can not be logged in and turnaround time clock will not start until any ambiguities are resolved. BY EXECUTING THIS COC, THE CLIENT HAS READ AND AGREES TO BE BOUND BY ALPHA'S TERMS & CONDITIONS. (See reverse side.)

Form No: 101-13 (rev 01-OCT-2013)

Sample Results

Client ID:	VAPOR INLET	Sampling Time:	4 hrs
Lab ID:	L1403549-01	Sampling Rate:	5 L/min
Matrix:	Air Media	Total Flow:	1200 L

PCB Aroclors in Air

	ng/cart				ug/m3				Dilution	
Parameter	**Result**	**Units**	**RL**	**MDL**	**Result**	**Units**	**RL**	**MDL**	**Factor**	**Column**
									1	A
Aroclor 1016	ND	ng/cart	30	-	ND	ug/m3	0.0250	-	1	A
Aroclor 1221	ND	ng/cart	100	-	ND	ug/m3	0.0833	-	1	A
Aroclor 1232	ND	ng/cart	30	-	ND	ug/m3	0.0250	-	1	A
Aroclor 1242	ND	ng/cart	20	-	ND	ug/m3	0.0167	-	1	A
Aroclor 1248	320	ng/cart	20	-	0.267	ug/m3	0.0167	-	1	A
Aroclor 1254	ND	ng/cart	20	-	ND	ug/m3	0.0167	-	1	A
Aroclor 1260	ND	ng/cart	20	-	ND	ug/m3	0.0167	-	1	A
Aroclor 1262	ND	ng/cart	20	-	ND	ug/m3	0.0167	-	1	A
Aroclor 1268	ND	ng/cart	20	-	ND	ug/m3	0.0167	-	1	A

Sample Results

Client ID:	VAPOR OUTLET	Sampling Time:	4 hrs
Lab ID:	L1403549-02	Sampling Rate:	5 L/min
Matrix:	Air Media	Total Flow:	1200 L

PCB Aroclors in Air

	ng/cart				ug/m3				Dilution	
Parameter	Result	Units	RL	MDL	Result	Units	RL	MDL	Factor	Column
									1	A
Aroclor 1016	ND	ng/cart	30	-	ND	ug/m3	0.0250	-	1	A
Aroclor 1221	ND	ng/cart	100	-	ND	ug/m3	0.0833	-	1	A
Aroclor 1232	ND	ng/cart	30	-	ND	ug/m3	0.0250	-	1	A
Aroclor 1242	ND	ng/cart	20	-	ND	ug/m3	0.0167	-	1	A
Aroclor 1248	ND	ng/cart	20	-	ND	ug/m3	0.0167	-	1	A
Aroclor 1254	ND	ng/cart	20	-	ND	ug/m3	0.0167	-	1	A
Aroclor 1260	ND	ng/cart	20	-	ND	ug/m3	0.0167	-	1	A
Aroclor 1262	ND	ng/cart	20	-	ND	ug/m3	0.0167	-	1	A
Aroclor 1268	ND	ng/cart	20	-	ND	ug/m3	0.0167	-	1	A

ANALYTICAL REPORT

Lab Number:	L1403551
Client:	TRC Environmental Consultants Wannalancit Mills 650 Suffolk Street Lowell, MA 01854
ATTN:	David Sullivan
Phone:	(978) 656-3565
Project Name:	NBHS IRA PSWS
Project Number:	115058
Report Date:	02/25/14

The original project report/data package is held by Alpha Analytical. This report/data package is paginated and should be reproduced only in its entirety. Alpha Analytical holds no responsibility for results and/or data that are not consistent with the original.

Certifications & Approvals: NY (11627), CT (PH-0141), NH (2206), NJ NELAP (MA015), RI (LAO00299), PA (68-02089), LA NELAP (03090), FL (E87814), TX (T104704419), WA (C954), DOD (L2217.01), USDA (Permit #P330-11-00109), US Army Corps of Engineers.

320 Forbes Boulevard, Mansfield, MA 02048-1806
508-822-9300 (Fax) 508-822-3288 800-624-9220 - www.alphalab.com

Project Name: NBHS IRA PSWS
Project Number: 115058

Lab Number: L1403551
Report Date: 02/25/14

Alpha Sample ID	Client ID	Sample Location	Collection Date/Time
L1403551-01	VAPOR INLET	NEW BEDFORD, MA	02/14/14 15:01
L1403551-02	VAPOR OUTLET	NEW BEDFORD, MA	02/14/14 15:08

Project Name: NBHS IRA PSWS **Lab Number:** L1403551

Project Number: 115058 **Report Date:** 02/25/14

MADEP MCP Response Action Analytical Report Certification

This form provides certifications for all samples performed by MCP methods. Please refer to the Sample Results and Container Information sections of this report for specification of MCP methods used for each analysis. The following questions pertain only to MCP Analytical Methods.

An affirmative response to questions A through F is required for "Presumptive Certainty" status		
A	Were all samples received in a condition consistent with those described on the Chain-of-Custody, properly preserved (including temperature) in the field or laboratory, and prepared/analyzed within method holding times?	YES
B	Were the analytical method(s) and all associated QC requirements specified in the selected CAM protocol(s) followed?	YES
C	Were all required corrective actions and analytical response actions specified in the selected CAM protocol(s) implemented for all identified performance standard non-conformances?	YES
D	Does the laboratory report comply with all the reporting requirements specified in CAM VII A, "Quality Assurance and Quality Control Guidelines for the Acquisition and Reporting of Analytical Data?"	YES
E a.	VPH, EPH, and APH Methods only: Was each method conducted without significant modification(s)? (Refer to the individual method(s) for a list of significant modifications).	N/A
E b.	APH and TO-15 Methods only: Was the complete analyte list reported for each method?	YES
F	Were all applicable CAM protocol QC and performance standard non-conformances identified and evaluated in a laboratory narrative (including all "No" responses to Questions A through E)?	YES

A response to questions G, H and I is required for "Presumptive Certainty" status		
G	Were the reporting limits at or below all CAM reporting limits specified in the selected CAM protocol(s)?	NO
H	Were all QC performance standards specified in the CAM protocol(s) achieved?	YES
I	Were results reported for the complete analyte list specified in the selected CAM protocol(s)?	YES

For any questions answered "No", please refer to the case narrative section on the following page(s).

Please note that sample matrix information is located in the Sample Results section of this report.

Project Name: NBHS IRA PSWS **Lab Number:** L1403551
Project Number: 115058 **Report Date:** 02/25/14

Case Narrative

The samples were received in accordance with the Chain of Custody and no significant deviations were encountered during the preparation or analysis unless otherwise noted. Sample Receipt, Container Information, and the Chain of Custody are located at the back of the report.

Results contained within this report relate only to the samples submitted under this Alpha Lab Number and meet all of the requirements of NELAC, for all NELAC accredited parameters. The data presented in this report is organized by parameter (i.e. VOC, SVOC, etc.). Sample specific Quality Control data (i.e. Surrogate Spike Recovery) is reported at the end of the target analyte list for each individual sample, followed by the Laboratory Batch Quality Control at the end of each parameter. If a sample was re-analyzed or re-extracted due to a required quality control corrective action and if both sets of data are reported, the Laboratory ID of the re-analysis or re-extraction is designated with an "R" or "RE", respectively. When multiple Batch Quality Control elements are reported (e.g. more than one LCS), the associated samples for each element are noted in the grey shaded header line of each data table. Any Laboratory Batch, Sample Specific % recovery or RPD value that is outside the listed Acceptance Criteria is bolded in the report. Performance criteria for CAM and RCP methods allow for some LCS compound failures to occur and still be within method compliance. In these instances, the specific failures are not narrated but are noted in the associated QC table. This information is also incorporated in the Data Usability format for our Data Merger tool where it can be reviewed along with any associated usability implications. Soil/sediments, solids and tissues are reported on a dry weight basis unless otherwise noted. Definitions of all data qualifiers and acronyms used in this report are provided in the Glossary located at the back of the report.

In reference to questions H (CAM) or 4 (RCP) when "NO" is checked, the performance criteria for CAM and RCP methods allow for some quality control failures to occur and still be within method compliance. In these instances the specific failure is not narrated but noted in the associated QC table. The information is also incorporated in the Data Usability format of our Data Merger tool where it can be reviewed along with any associated usability implications.

Please see the associated ADEx data file for a comparison of laboratory reporting limits that were achieved with the regulatory Numerical Standards requested on the Chain of Custody.

HOLD POLICY
For samples submitted on hold, Alpha's policy is to hold samples (with the exception of Air canisters) free of charge for 21 calendar days from the date the project is completed. After 21 calendar days, we will dispose of all samples submitted including those put on hold unless you have contacted your Client Service Representative and made arrangements for Alpha to continue to hold the samples. Air canisters will be disposed after 3 business days from the date the project is completed.

Please contact Client Services at 800-624-9220 with any questions.

Project Name:	NBHS IRA PSWS	**Lab Number:**	L1403551
Project Number:	115058	**Report Date:**	02/25/14

Case Narrative (continued)

MCP Related Narratives

Canisters were released from the laboratory on February 13, 2014. The canister certification data is provided as an addendum.

MCP Volatile Organics in Air

In reference to question G:

One or more of the target analytes did not achieve the requested CAM reporting limits.

I, the undersigned, attest under the pains and penalties of perjury that, to the best of my knowledge and belief and based upon my personal inquiry of those responsible for providing the information contained in this analytical report, such information is accurate and complete. This certificate of analysis is not complete unless this page accompanies any and all pages of this report.

Authorized Signature: Kathleen O'Brien

Title: Technical Director/Representative

Date: 02/25/14

AIR

Project Name: NBHS IRA PSWS
Project Number: 115058
Lab Number: L1403551
Report Date: 02/25/14

SAMPLE RESULTS

Lab ID: L1403551-01
Client ID: VAPOR INLET
Sample Location: NEW BEDFORD, MA
Matrix: Soil_Vapor
Anaytical Method: 101,TO-15
Analytical Date: 02/21/14 01:33
Analyst: MB

Date Collected: 02/14/14 15:01
Date Received: 02/14/14
Field Prep: Not Specified

Parameter	ppbV Results	ppbV RL	ppbV MDL	ug/m3 Results	ug/m3 RL	ug/m3 MDL	Qualifier	Dilution Factor
MCP Volatile Organics in Air - Mansfield Lab								
Vinyl chloride	ND	0.200	--	ND	0.511	--		1
Bromomethane	ND	0.200	--	ND	0.777	--		1
Acetone	5.25	1.00	--	12.5	2.38	--		1
1,1-Dichloroethene	ND	0.200	--	ND	0.793	--		1
Methylene chloride	ND	1.40	--	ND	4.86	--		1
trans-1,2-Dichloroethene	ND	0.200	--	ND	0.793	--		1
1,1-Dichloroethane	ND	0.200	--	ND	0.809	--		1
Methyl tert butyl ether	ND	0.200	--	ND	0.721	--		1
2-Butanone	1.37	0.200	--	4.04	0.590	--		1
cis-1,2-Dichloroethene	ND	0.200	--	ND	0.793	--		1
Chloroform	ND	0.200	--	ND	0.977	--		1
1,2-Dichloroethane	ND	0.200	--	ND	0.809	--		1
1,1,1-Trichloroethane	ND	0.200	--	ND	1.09	--		1
Benzene	0.437	0.200	--	1.40	0.639	--		1
Carbon tetrachloride	ND	0.200	--	ND	1.26	--		1
1,2-Dichloropropane	ND	0.200	--	ND	0.924	--		1
Bromodichloromethane	ND	0.200	--	ND	1.34	--		1
1,4-Dioxane	ND	0.200	--	ND	0.721	--		1
Trichloroethene	ND	0.200	--	ND	1.07	--		1
cis-1,3-Dichloropropene	ND	0.200	--	ND	0.908	--		1
4-Methyl-2-pentanone	ND	0.200	--	ND	0.820	--		1
trans-1,3-Dichloropropene	ND	0.200	--	ND	0.908	--		1
1,1,2-Trichloroethane	ND	0.200	--	ND	1.09	--		1
Toluene	5.88	0.200	--	22.2	0.754	--		1

Project Name: NBHS IRA PSWS
Project Number: 115058
Lab Number: L1403551
Report Date: 02/25/14

SAMPLE RESULTS

Lab ID: L1403551-01
Client ID: VAPOR INLET
Sample Location: NEW BEDFORD, MA
Date Collected: 02/14/14 15:01
Date Received: 02/14/14
Field Prep: Not Specified

Parameter	ppbV Results	ppbV RL	ppbV MDL	ug/m3 Results	ug/m3 RL	ug/m3 MDL	Qualifier	Dilution Factor
MCP Volatile Organics in Air - Mansfield Lab								
Dibromochloromethane	ND	0.200	--	ND	1.70	--		1
1,2-Dibromoethane	ND	0.200	--	ND	1.54	--		1
Tetrachloroethene	ND	0.200	--	ND	1.36	--		1
Chlorobenzene	ND	0.200	--	ND	0.921	--		1
Ethylbenzene	1.62	0.200	--	7.04	0.869	--		1
p/m-Xylene	5.40	0.400	--	23.5	1.74	--		1
Bromoform	ND	0.200	--	ND	2.07	--		1
Styrene	ND	0.200	--	ND	0.852	--		1
1,1,2,2-Tetrachloroethane	ND	0.200	--	ND	1.37	--		1
o-Xylene	2.15	0.200	--	9.34	0.869	--		1
1,3-Dichlorobenzene	8.15	0.200	--	49.0	1.20	--		1
1,4-Dichlorobenzene	ND	0.200	--	ND	1.20	--		1
1,2-Dichlorobenzene	ND	0.200	--	ND	1.20	--		1
1,2,4-Trichlorobenzene	ND	0.200	--	ND	1.48	--		1
Naphthalene	0.217	0.200	--	1.14	1.05	--		1
Hexachlorobutadiene	ND	0.200	--	ND	2.13	--		1

Internal Standard	% Recovery	Qualifier	Acceptance Criteria
1,4-Difluorobenzene	92		60-140
Bromochloromethane	81		60-140
chlorobenzene-d5	94		60-140

Project Name: NBHS IRA PSWS
Project Number: 115058
Lab Number: L1403551
Report Date: 02/25/14

SAMPLE RESULTS

Lab ID: L1403551-02
Client ID: VAPOR OUTLET
Sample Location: NEW BEDFORD, MA
Matrix: Soil_Vapor
Anaytical Method: 101,TO15-SIM
Analytical Date: 02/18/14 03:24
Analyst: MB

Date Collected: 02/14/14 15:08
Date Received: 02/14/14
Field Prep: Not Specified

Parameter	ppbV Results	ppbV RL	ppbV MDL	ug/m3 Results	ug/m3 RL	ug/m3 MDL	Qualifier	Dilution Factor
MCP Volatile Organics in Air by SIM - Mansfield Lab								
Vinyl chloride	0.089	0.020	--	0.228	0.051	--		1
Bromomethane	ND	0.020	--	ND	0.078	--		1
Acetone	3.20	1.00	--	7.60	2.38	--		1
1,1-Dichloroethene	ND	0.020	--	ND	0.079	--		1
Methylene chloride	ND	1.40	--	ND	4.86	--		1
trans-1,2-Dichloroethene	2.76	0.020	--	10.9	0.079	--		1
1,1-Dichloroethane	ND	0.020	--	ND	0.081	--		1
Methyl tert butyl ether	ND	0.020	--	ND	0.072	--		1
2-Butanone	0.684	0.200	--	2.02	0.590	--		1
cis-1,2-Dichloroethene	7.88	0.020	--	31.2	0.079	--		1
Chloroform	0.102	0.020	--	0.498	0.098	--		1
1,2-Dichloroethane	ND	0.020	--	ND	0.081	--		1
1,1,1-Trichloroethane	ND	0.020	--	ND	0.109	--		1
Benzene	0.253	0.100	--	0.808	0.319	--		1
Carbon tetrachloride	ND	0.020	--	ND	0.126	--		1
1,2-Dichloropropane	ND	0.020	--	ND	0.092	--		1
Bromodichloromethane	ND	0.020	--	ND	0.134	--		1
1,4-Dioxane	ND	0.100	--	ND	0.360	--		1
Trichloroethene	ND	0.020	--	ND	0.107	--		1
cis-1,3-Dichloropropene	ND	0.020	--	ND	0.091	--		1
4-Methyl-2-pentanone	ND	0.200	--	ND	0.820	--		1
trans-1,3-Dichloropropene	ND	0.020	--	ND	0.091	--		1
1,1,2-Trichloroethane	ND	0.020	--	ND	0.109	--		1
Toluene	4.46	0.050	--	16.8	0.188	--		1

Project Name: NBHS IRA PSWS
Project Number: 115058
Lab Number: L1403551
Report Date: 02/25/14

SAMPLE RESULTS

Lab ID: L1403551-02
Client ID: VAPOR OUTLET
Sample Location: NEW BEDFORD, MA
Date Collected: 02/14/14 15:08
Date Received: 02/14/14
Field Prep: Not Specified

Parameter	ppbV Results	ppbV RL	ppbV MDL	ug/m3 Results	ug/m3 RL	ug/m3 MDL	Qualifier	Dilution Factor
MCP Volatile Organics in Air by SIM - Mansfield Lab								
Dibromochloromethane	ND	0.020	--	ND	0.170	--		1
1,2-Dibromoethane	ND	0.020	--	ND	0.154	--		1
Tetrachloroethene	ND	0.020	--	ND	0.136	--		1
Chlorobenzene	ND	0.020	--	ND	0.092	--		1
Ethylbenzene	1.18	0.020	--	5.13	0.087	--		1
p/m-Xylene	4.35	0.040	--	18.9	0.174	--		1
Bromoform	ND	0.020	--	ND	0.207	--		1
Styrene	0.062	0.020	--	0.264	0.085	--		1
1,1,2,2-Tetrachloroethane	ND	0.020	--	ND	0.137	--		1
o-Xylene	1.64	0.020	--	7.12	0.087	--		1
1,3-Dichlorobenzene	7.13	0.020	--	42.9	0.120	--		1
1,4-Dichlorobenzene	ND	0.020	--	ND	0.120	--		1
1,2-Dichlorobenzene	ND	0.020	--	ND	0.120	--		1
1,2,4-Trichlorobenzene	ND	0.050	--	ND	0.371	--		1
Naphthalene	0.130	0.050	--	0.682	0.262	--		1
Hexachlorobutadiene	ND	0.050	--	ND	0.533	--		1

Internal Standard	% Recovery	Qualifier	Acceptance Criteria
1,4-difluorobenzene	88		60-140
bromochloromethane	96		60-140
chlorobenzene-d5	91		60-140

Project Name: NBHS IRA PSWS
Project Number: 115058

Lab Number: L1403551
Report Date: 02/25/14

Method Blank Analysis
Batch Quality Control

Analytical Method: 101,TO15-SIM
Analytical Date: 02/17/14 19:38

Parameter	ppbV Results	ppbV RL	ppbV MDL	ug/m3 Results	ug/m3 RL	ug/m3 MDL	Qualifier	Dilution Factor
MCP Volatile Organics in Air by SIM - Mansfield Lab for sample(s): 02 Batch: WG670845-4								
Dichlorodifluoromethane	ND	0.050	--	ND	0.247	--		1
Chloromethane	ND	0.500	--	ND	1.03	--		1
Freon-114	ND	0.050	--	ND	0.349	--		1
Vinyl chloride	ND	0.020	--	ND	0.051	--		1
1,3-Butadiene	ND	0.020	--	ND	0.044	--		1
Bromomethane	ND	0.020	--	ND	0.078	--		1
Chloroethane	ND	0.020	--	ND	0.053	--		1
Acetone	ND	1.00	--	ND	2.38	--		1
Trichlorofluoromethane	ND	0.050	--	ND	0.281	--		1
1,1-Dichloroethene	ND	0.020	--	ND	0.079	--		1
Methylene chloride	ND	1.40	--	ND	4.86	--		1
Freon-113	ND	0.050	--	ND	0.383	--		1
Halothane	ND	0.050	--	ND	0.404	--		1
trans-1,2-Dichloroethene	ND	0.020	--	ND	0.079	--		1
1,1-Dichloroethane	ND	0.020	--	ND	0.081	--		1
Methyl tert butyl ether	ND	0.020	--	ND	0.072	--		1
2-Butanone	ND	0.200	--	ND	0.590	--		1
cis-1,2-Dichloroethene	ND	0.020	--	ND	0.079	--		1
Chloroform	ND	0.020	--	ND	0.098	--		1
1,2-Dichloroethane	ND	0.020	--	ND	0.081	--		1
1,1,1-Trichloroethane	ND	0.020	--	ND	0.109	--		1
Benzene	ND	0.100	--	ND	0.319	--		1
Carbon tetrachloride	ND	0.020	--	ND	0.126	--		1
1,2-Dichloropropane	ND	0.020	--	ND	0.092	--		1
Bromodichloromethane	ND	0.020	--	ND	0.134	--		1

Project Name: NBHS IRA PSWS
Project Number: 115058

Lab Number: L1403551
Report Date: 02/25/14

Method Blank Analysis
Batch Quality Control

Analytical Method: 101,TO15-SIM
Analytical Date: 02/17/14 19:38

Parameter	ppbV Results	ppbV RL	ppbV MDL	ug/m3 Results	ug/m3 RL	ug/m3 MDL	Qualifier	Dilution Factor
MCP Volatile Organics in Air by SIM - Mansfield Lab for sample(s): 02 Batch: WG670845-4								
1,4-Dioxane	ND	0.100	--	ND	0.360	--		1
Trichloroethene	ND	0.020	--	ND	0.107	--		1
cis-1,3-Dichloropropene	ND	0.020	--	ND	0.091	--		1
4-Methyl-2-pentanone	ND	0.200	--	ND	0.820	--		1
trans-1,3-Dichloropropene	ND	0.020	--	ND	0.091	--		1
1,1,2-Trichloroethane	ND	0.020	--	ND	0.109	--		1
Toluene	ND	0.050	--	ND	0.188	--		1
Dibromochloromethane	ND	0.020	--	ND	0.170	--		1
1,2-Dibromoethane	ND	0.020	--	ND	0.154	--		1
Tetrachloroethene	ND	0.020	--	ND	0.136	--		1
1,1,1,2-Tetrachloroethane	ND	0.020	--	ND	0.137	--		1
Chlorobenzene	ND	0.020	--	ND	0.092	--		1
Ethylbenzene	ND	0.020	--	ND	0.087	--		1
p/m-Xylene	ND	0.040	--	ND	0.174	--		1
Bromoform	ND	0.020	--	ND	0.207	--		1
Styrene	ND	0.020	--	ND	0.085	--		1
1,1,2,2-Tetrachloroethane	ND	0.020	--	ND	0.137	--		1
o-Xylene	ND	0.020	--	ND	0.087	--		1
Isopropylbenzene	ND	0.500	--	ND	2.46	--		1
1,3,5-Trimethybenzene	ND	0.020	--	ND	0.098	--		1
1,2,4-Trimethylbenzene	ND	0.020	--	ND	0.098	--		1
1,3-Dichlorobenzene	ND	0.020	--	ND	0.120	--		1
1,4-Dichlorobenzene	ND	0.020	--	ND	0.120	--		1
sec-Butylbenzene	ND	0.500	--	ND	2.74	--		1
p-Isopropyltoluene	ND	0.500	--	ND	2.74	--		1

Project Name: NBHS IRA PSWS
Project Number: 115058
Lab Number: L1403551
Report Date: 02/25/14

Method Blank Analysis
Batch Quality Control

Analytical Method: 101,TO15-SIM
Analytical Date: 02/17/14 19:38

Parameter	ppbV Results	ppbV RL	ppbV MDL	ug/m3 Results	ug/m3 RL	ug/m3 MDL	Qualifier	Dilution Factor
MCP Volatile Organics in Air by SIM - Mansfield Lab for sample(s): 02 Batch: WG670845-4								
1,2-Dichlorobenzene	ND	0.020	--	ND	0.120	--		1
n-Butylbenzene	ND	0.500	--	ND	2.74	--		1
1,2,4-Trichlorobenzene	ND	0.050	--	ND	0.371	--		1
Naphthalene	ND	0.050	--	ND	0.262	--		1
1,2,3-Trichlorobenzene	ND	0.050	--	ND	0.371	--		1
Hexachlorobutadiene	ND	0.050	--	ND	0.533	--		1

Project Name: NBHS IRA PSWS
Project Number: 115058
Lab Number: L1403551
Report Date: 02/25/14

Method Blank Analysis
Batch Quality Control

Analytical Method: 101,TO-15
Analytical Date: 02/20/14 17:49

Parameter	ppbV Results	ppbV RL	ppbV MDL	ug/m3 Results	ug/m3 RL	ug/m3 MDL	Qualifier	Dilution Factor
MCP Volatile Organics in Air - Mansfield Lab for sample(s): 01 Batch: WG671458-4								
Chlorodifluoromethane	ND	0.200	--	ND	0.707	--		1
Propylene	ND	0.500	--	ND	0.861	--		1
Propane	ND	0.500	--	ND	0.902	--		1
Dichlorodifluoromethane	ND	0.200	--	ND	0.989	--		1
Chloromethane	ND	0.200	--	ND	0.413	--		1
1,2-Dichloro-1,1,2,2-tetrafluoroethane	ND	0.200	--	ND	1.40	--		1
Methanol	ND	5.00	--	ND	6.55	--		1
Vinyl chloride	ND	0.200	--	ND	0.511	--		1
1,3-Butadiene	ND	0.200	--	ND	0.442	--		1
Butane	ND	0.200	--	ND	0.475	--		1
Bromomethane	ND	0.200	--	ND	0.777	--		1
Chloroethane	ND	0.200	--	ND	0.528	--		1
Ethyl Alcohol	ND	2.50	--	ND	4.71	--		1
Dichlorofluoromethane	ND	0.200	--	ND	0.842	--		1
Vinyl bromide	ND	0.200	--	ND	0.874	--		1
Acrolein	ND	0.500	--	ND	1.15	--		1
Acetone	ND	1.00	--	ND	2.38	--		1
Acetonitrile	ND	0.200	--	ND	0.336	--		1
Trichlorofluoromethane	ND	0.200	--	ND	1.12	--		1
iso-Propyl Alcohol	ND	0.500	--	ND	1.23	--		1
Acrylonitrile	ND	0.200	--	ND	0.434	--		1
Pentane	ND	0.200	--	ND	0.590	--		1
Ethyl ether	ND	0.200	--	ND	0.606	--		1
1,1-Dichloroethene	ND	0.200	--	ND	0.793	--		1
tert-Butyl Alcohol	ND	0.500	--	ND	1.52	--		1

Project Name: NBHS IRA PSWS
Project Number: 115058
Lab Number: L1403551
Report Date: 02/25/14

Method Blank Analysis
Batch Quality Control

Analytical Method: 101,TO-15
Analytical Date: 02/20/14 17:49

Parameter	ppbV Results	ppbV RL	ppbV MDL	ug/m3 Results	ug/m3 RL	ug/m3 MDL	Qualifier	Dilution Factor
MCP Volatile Organics in Air - Mansfield Lab for sample(s): 01 Batch: WG671458-4								
Methylene chloride	ND	1.40	--	ND	4.86	--		1
3-Chloropropene	ND	0.200	--	ND	0.626	--		1
Carbon disulfide	ND	0.200	--	ND	0.623	--		1
1,1,2-Trichloro-1,2,2-Trifluoroethane	ND	0.200	--	ND	1.53	--		1
trans-1,2-Dichloroethene	ND	0.200	--	ND	0.793	--		1
1,1-Dichloroethane	ND	0.200	--	ND	0.809	--		1
Methyl tert butyl ether	ND	0.200	--	ND	0.721	--		1
Vinyl acetate	ND	0.200	--	ND	0.704	--		1
2-Butanone	ND	0.200	--	ND	0.590	--		1
cis-1,2-Dichloroethene	ND	0.200	--	ND	0.793	--		1
Ethyl Acetate	ND	0.500	--	ND	1.80	--		1
Chloroform	ND	0.200	--	ND	0.977	--		1
Tetrahydrofuran	ND	0.200	--	ND	0.590	--		1
2,2-Dichloropropane	ND	0.200	--	ND	0.924	--		1
1,2-Dichloroethane	ND	0.200	--	ND	0.809	--		1
n-Hexane	ND	0.200	--	ND	0.705	--		1
Isopropyl Ether	ND	0.200	--	ND	0.836	--		1
Ethyl-Tert-Butyl-Ether	ND	0.200	--	ND	0.836	--		1
1,1,1-Trichloroethane	ND	0.200	--	ND	1.09	--		1
1,1-Dichloropropene	ND	0.200	--	ND	0.908	--		1
Benzene	ND	0.200	--	ND	0.639	--		1
Carbon tetrachloride	ND	0.200	--	ND	1.26	--		1
Cyclohexane	ND	0.200	--	ND	0.688	--		1
Tertiary-Amyl Methyl Ether	ND	0.200	--	ND	0.836	--		1
Dibromomethane	ND	0.200	--	ND	1.42	--		1

Project Name: NBHS IRA PSWS
Project Number: 115058
Lab Number: L1403551
Report Date: 02/25/14

Method Blank Analysis
Batch Quality Control

Analytical Method: 101,TO-15
Analytical Date: 02/20/14 17:49

Parameter	ppbV Results	ppbV RL	ppbV MDL	ug/m3 Results	ug/m3 RL	ug/m3 MDL	Qualifier	Dilution Factor
MCP Volatile Organics in Air - Mansfield Lab for sample(s): 01 Batch: WG671458-4								
1,2-Dichloropropane	ND	0.200	--	ND	0.924	--		1
Bromodichloromethane	ND	0.200	--	ND	1.34	--		1
1,4-Dioxane	ND	0.200	--	ND	0.721	--		1
Trichloroethene	ND	0.200	--	ND	1.07	--		1
2,2,4-Trimethylpentane	ND	0.200	--	ND	0.934	--		1
Heptane	ND	0.200	--	ND	0.820	--		1
cis-1,3-Dichloropropene	ND	0.200	--	ND	0.908	--		1
4-Methyl-2-pentanone	ND	0.200	--	ND	0.820	--		1
trans-1,3-Dichloropropene	ND	0.200	--	ND	0.908	--		1
1,1,2-Trichloroethane	ND	0.200	--	ND	1.09	--		1
Toluene	ND	0.200	--	ND	0.754	--		1
1,3-Dichloropropane	ND	0.200	--	ND	0.924	--		1
2-Hexanone	ND	0.200	--	ND	0.820	--		1
Dibromochloromethane	ND	0.200	--	ND	1.70	--		1
1,2-Dibromoethane	ND	0.200	--	ND	1.54	--		1
Butyl Acetate	ND	0.500	--	ND	2.38	--		1
Octane	ND	0.200	--	ND	0.934	--		1
Tetrachloroethene	ND	0.200	--	ND	1.36	--		1
1,1,1,2-Tetrachloroethane	ND	0.200	--	ND	1.37	--		1
Chlorobenzene	ND	0.200	--	ND	0.921	--		1
Ethylbenzene	ND	0.200	--	ND	0.869	--		1
p/m-Xylene	ND	0.400	--	ND	1.74	--		1
Bromoform	ND	0.200	--	ND	2.07	--		1
Styrene	ND	0.200	--	ND	0.852	--		1
1,1,2,2-Tetrachloroethane	ND	0.200	--	ND	1.37	--		1

Project Name: NBHS IRA PSWS
Project Number: 115058

Lab Number: L1403551
Report Date: 02/25/14

Method Blank Analysis
Batch Quality Control

Analytical Method: 101,TO-15
Analytical Date: 02/20/14 17:49

Parameter	ppbV Results	ppbV RL	ppbV MDL	ug/m3 Results	ug/m3 RL	ug/m3 MDL	Qualifier	Dilution Factor
MCP Volatile Organics in Air - Mansfield Lab for sample(s): 01 Batch: WG671458-4								
o-Xylene	ND	0.200	--	ND	0.869	--		1
1,2,3-Trichloropropane	ND	0.200	--	ND	1.21	--		1
Nonane (C9)	ND	0.200	--	ND	1.05	--		1
Isopropylbenzene	ND	0.200	--	ND	0.983	--		1
Bromobenzene	ND	0.200	--	ND	0.793	--		1
o-Chlorotoluene	ND	0.200	--	ND	1.04	--		1
n-Propylbenzene	ND	0.200	--	ND	0.983	--		1
p-Chlorotoluene	ND	0.200	--	ND	1.04	--		1
4-Ethyltoluene	ND	0.200	--	ND	0.983	--		1
1,3,5-Trimethylbenzene	ND	0.200	--	ND	0.983	--		1
tert-Butylbenzene	ND	0.200	--	ND	1.10	--		1
1,2,4-Trimethylbenzene	ND	0.200	--	ND	0.983	--		1
Decane (C10)	ND	0.200	--	ND	1.16	--		1
Benzyl chloride	ND	0.200	--	ND	1.04	--		1
1,3-Dichlorobenzene	ND	0.200	--	ND	1.20	--		1
1,4-Dichlorobenzene	ND	0.200	--	ND	1.20	--		1
sec-Butylbenzene	ND	0.200	--	ND	1.10	--		1
p-Isopropyltoluene	ND	0.200	--	ND	1.10	--		1
1,2-Dichlorobenzene	ND	0.200	--	ND	1.20	--		1
n-Butylbenzene	ND	0.200	--	ND	1.10	--		1
1,2-Dibromo-3-chloropropane	ND	0.200	--	ND	1.93	--		1
Undecane	ND	0.200	--	ND	1.28	--		1
Dodecane (C12)	ND	0.200	--	ND	1.39	--		1
1,2,4-Trichlorobenzene	ND	0.200	--	ND	1.48	--		1
Naphthalene	ND	0.200	--	ND	1.05	--		1

Project Name: NBHS IRA PSWS
Project Number: 115058
Lab Number: L1403551
Report Date: 02/25/14

Method Blank Analysis
Batch Quality Control

Analytical Method: 101,TO-15
Analytical Date: 02/20/14 17:49

Parameter	ppbV Results	ppbV RL	ppbV MDL	ug/m3 Results	ug/m3 RL	ug/m3 MDL	Qualifier	Dilution Factor
MCP Volatile Organics in Air - Mansfield Lab for sample(s): 01 Batch: WG671458-4								
1,2,3-Trichlorobenzene	ND	0.200	--	ND	1.48	--		1
Hexachlorobutadiene	ND	0.200	--	ND	2.13	--		1

Lab Control Sample Analysis
Batch Quality Control

Project Name: NBHS IRA PSWS
Project Number: 115058

Lab Number: L1403551
Report Date: 02/25/14

Parameter	LCS %Recovery	Qual	LCSD %Recovery	Qual	%Recovery Limits	RPD	Qual	RPD Limits
MCP Volatile Organics in Air by SIM - Mansfield Lab Associated sample(s): 02 Batch: WG670845-3								
Propylene	75		-		70-130	-		
Dichlorodifluoromethane	76		-		70-130	-		
Chloromethane	87		-		70-130	-		
1,2-Dichloro-1,1,2,2-tetrafluoroethane	87		-		70-130	-		
Vinyl chloride	83		-		70-130	-		
1,3-Butadiene	92		-		70-130	-		
Bromomethane	89		-		70-130	-		
Chloroethane	86		-		70-130	-		
Ethyl Alcohol	103		-		70-130	-		
Vinyl bromide	87		-		70-130	-		
Acetone	116		-		50-150	-		
Trichlorofluoromethane	95		-		70-130	-		
iso-Propyl Alcohol	100		-		70-130	-		
1,1-Dichloroethene	90		-		70-130	-		
Methylene chloride	98		-		70-130	-		
3-Chloropropene	97		-		70-130	-		
Carbon disulfide	86		-		70-130	-		
1,1,2-Trichloro-1,2,2-Trifluoroethane	95		-		70-130	-		
Halothane	99		-		70-130	-		
trans-1,2-Dichloroethene	82		-		70-130	-		
1,1-Dichloroethane	89		-		70-130	-		

Lab Control Sample Analysis
Batch Quality Control

Project Name: NBHS IRA PSWS
Project Number: 115058

Lab Number: L1403551
Report Date: 02/25/14

Parameter	LCS %Recovery	Qual	LCSD %Recovery	Qual	%Recovery Limits	RPD	Qual	RPD Limits
MCP Volatile Organics in Air by SIM - Mansfield Lab Associated sample(s): 02 Batch: WG670845-3								
Methyl tert butyl ether	86		-		70-130	-		
Vinyl acetate	112		-		70-130	-		
2-Butanone	98		-		70-130	-		
cis-1,2-Dichloroethene	100		-		70-130	-		
Ethyl Acetate	87		-		70-130	-		
Chloroform	93		-		70-130	-		
Tetrahydrofuran	89		-		70-130	-		
1,2-Dichloroethane	81		-		70-130	-		
n-Hexane	110		-		70-130	-		
1,1,1-Trichloroethane	106		-		70-130	-		
Benzene	89		-		70-130	-		
Carbon tetrachloride	108		-		70-130	-		
Cyclohexane	95		-		70-130	-		
1,2-Dichloropropane	98		-		70-130	-		
Bromodichloromethane	98		-		70-130	-		
1,4-Dioxane	88		-		50-150	-		
Trichloroethene	99		-		70-130	-		
2,2,4-Trimethylpentane	101		-		70-130	-		
cis-1,3-Dichloropropene	103		-		70-130	-		
4-Methyl-2-pentanone	106		-		70-130	-		
trans-1,3-Dichloropropene	89		-		70-130	-		

Lab Control Sample Analysis
Batch Quality Control

Project Name: NBHS IRA PSWS
Project Number: 115058

Lab Number: L1403551
Report Date: 02/25/14

Parameter	LCS %Recovery	Qual	LCSD %Recovery	Qual	%Recovery Limits	RPD	Qual	RPD Limits
MCP Volatile Organics in Air by SIM - Mansfield Lab Associated sample(s): 02 Batch: WG670845-3								
1,1,2-Trichloroethane	101		-		70-130	-		
Toluene	93		-		70-130	-		
2-Hexanone	104		-		70-130	-		
Dibromochloromethane	89		-		70-130	-		
1,2-Dibromoethane	98		-		70-130	-		
Tetrachloroethene	97		-		70-130	-		
Chlorobenzene	89		-		70-130	-		
Ethylbenzene	93		-		70-130	-		
p/m-Xylene	95		-		70-130	-		
Bromoform	87		-		70-130	-		
Styrene	95		-		70-130	-		
1,1,2,2-Tetrachloroethane	93		-		70-130	-		
o-Xylene	93		-		70-130	-		
1,3,5-Trimethylbenzene	86		-		70-130	-		
1,2,4-Trimethylbenzene	91		-		70-130	-		
Benzyl chloride	82		-		70-130	-		
1,3-Dichlorobenzene	94		-		70-130	-		
1,4-Dichlorobenzene	90		-		70-130	-		
1,2-Dichlorobenzene	91		-		70-130	-		
1,2,4-Trichlorobenzene	98		-		50-150	-		
Naphthalene	98		-		50-150	-		

Lab Control Sample Analysis
Batch Quality Control

Project Name: NBHS IRA PSWS
Project Number: 115058

Lab Number: L1403551
Report Date: 02/25/14

Parameter	LCS %Recovery	Qual	LCSD %Recovery	Qual	%Recovery Limits	RPD	Qual	RPD Limits
MCP Volatile Organics in Air by SIM - Mansfield Lab Associated sample(s): 02 Batch: WG670845-3								
1,2,3-Trichlorobenzene	100		-		70-130	-		
Hexachlorobutadiene	98		-		50-150	-		

Lab Control Sample Analysis
Batch Quality Control

Project Name: NBHS IRA PSWS
Project Number: 115058

Lab Number: L1403551
Report Date: 02/25/14

Parameter	LCS %Recovery	Qual	LCSD %Recovery	Qual	%Recovery Limits	RPD	Qual	RPD Limits
MCP Volatile Organics in Air - Mansfield Lab Associated sample(s): 01 Batch: WG671458-3								
Chlorodifluoromethane	80		-		70-130	-		
Propylene	90		-		70-130	-		
Dichlorodifluoromethane	80		-		70-130	-		
Chloromethane	92		-		70-130	-		
1,2-Dichloro-1,1,2,2-tetrafluoroethane	89		-		70-130	-		
Methanol	77		-		70-130	-		
Vinyl chloride	90		-		70-130	-		
1,3-Butadiene	95		-		70-130	-		
Bromomethane	86		-		70-130	-		
Chloroethane	90		-		70-130	-		
Ethyl Alcohol	87		-		70-130	-		
Dichlorofluoromethane	82		-		70-130	-		
Vinyl bromide	87		-		70-130	-		
Acrolein	84		-		70-130	-		
Acetone	107		-		50-150	-		
Acetonitrile	81		-		70-130	-		
Trichlorofluoromethane	84		-		70-130	-		
iso-Propyl Alcohol	82		-		70-130	-		
Acrylonitrile	78		-		70-130	-		
Pentane	81		-		70-130	-		
Ethyl ether	82		-		70-130	-		

Lab Control Sample Analysis
Batch Quality Control

Project Name: NBHS IRA PSWS
Project Number: 115058

Lab Number: L1403551
Report Date: 02/25/14

Parameter	LCS %Recovery	Qual	LCSD %Recovery	Qual	%Recovery Limits	RPD	Qual	RPD Limits
MCP Volatile Organics in Air - Mansfield Lab Associated sample(s): 01 Batch: WG671458-3								
1,1-Dichloroethene	84		-		70-130	-		
tert-Butyl Alcohol	84		-		70-130	-		
Methylene chloride	87		-		70-130	-		
3-Chloropropene	90		-		70-130	-		
Carbon disulfide	85		-		70-130	-		
1,1,2-Trichloro-1,2,2-Trifluoroethane	86		-		70-130	-		
trans-1,2-Dichloroethene	78		-		70-130	-		
1,1-Dichloroethane	86		-		70-130	-		
Methyl tert butyl ether	91		-		70-130	-		
Vinyl acetate	106		-		70-130	-		
2-Butanone	103		-		70-130	-		
cis-1,2-Dichloroethene	113		-		70-130	-		
Ethyl Acetate	112		-		70-130	-		
Chloroform	97		-		70-130	-		
Tetrahydrofuran	102		-		70-130	-		
2,2-Dichloropropane	93		-		70-130	-		
1,2-Dichloroethane	101		-		70-130	-		
n-Hexane	105		-		70-130	-		
Isopropyl Ether	102		-		70-130	-		
Ethyl-Tert-Butyl-Ether	102		-		70-130	-		
1,1,1-Trichloroethane	94		-		70-130	-		

Lab Control Sample Analysis
Batch Quality Control

Project Name: NBHS IRA PSWS
Project Number: 115058

Lab Number: L1403551
Report Date: 02/25/14

Parameter	LCS %Recovery	Qual	LCSD %Recovery	Qual	%Recovery Limits	RPD	Qual	RPD Limits
MCP Volatile Organics in Air - Mansfield Lab Associated sample(s): 01 Batch: WG671458-3								
1,1-Dichloropropene	98		-		70-130	-		
Benzene	97		-		70-130	-		
Carbon tetrachloride	95		-		70-130	-		
Cyclohexane	99		-		70-130	-		
Tertiary-Amyl Methyl Ether	97		-		70-130	-		
Dibromomethane	95		-		70-130	-		
1,2-Dichloropropane	98		-		70-130	-		
Bromodichloromethane	94		-		70-130	-		
1,4-Dioxane	90		-		50-150	-		
Trichloroethene	97		-		70-130	-		
2,2,4-Trimethylpentane	98		-		70-130	-		
Heptane	98		-		70-130	-		
cis-1,3-Dichloropropene	105		-		70-130	-		
4-Methyl-2-pentanone	103		-		70-130	-		
trans-1,3-Dichloropropene	93		-		70-130	-		
1,1,2-Trichloroethane	94		-		70-130	-		
Toluene	97		-		70-130	-		
1,3-Dichloropropane	92		-		70-130	-		
2-Hexanone	118		-		70-130	-		
Dibromochloromethane	90		-		70-130	-		
1,2-Dibromoethane	98		-		70-130	-		

Lab Control Sample Analysis
Batch Quality Control

Project Name: NBHS IRA PSWS
Project Number: 115058

Lab Number: L1403551
Report Date: 02/25/14

Parameter	LCS %Recovery	Qual	LCSD %Recovery	Qual	%Recovery Limits	RPD	Qual	RPD Limits
MCP Volatile Organics in Air - Mansfield Lab Associated sample(s): 01 Batch: WG671458-3								
Octane	92		-		70-130	-		
Tetrachloroethene	93		-		70-130	-		
1,1,1,2-Tetrachloroethane	92		-		70-130	-		
Chlorobenzene	97		-		70-130	-		
Ethylbenzene	103		-		70-130	-		
p/m-Xylene	99		-		70-130	-		
Bromoform	86		-		70-130	-		
Styrene	102		-		70-130	-		
1,1,2,2-Tetrachloroethane	99		-		70-130	-		
o-Xylene	100		-		70-130	-		
1,2,3-Trichloropropane	93		-		70-130	-		
Nonane (C9)	97		-		70-130	-		
Isopropylbenzene	95		-		70-130	-		
Bromobenzene	92		-		70-130	-		
o-Chlorotoluene	93		-		70-130	-		
n-Propylbenzene	96		-		70-130	-		
p-Chlorotoluene	91		-		70-130	-		
4-Ethyltoluene	87		-		70-130	-		
1,3,5-Trimethylbenzene	97		-		70-130	-		
tert-Butylbenzene	94		-		70-130	-		
1,2,4-Trimethylbenzene	99		-		70-130	-		

Lab Control Sample Analysis
Batch Quality Control

Project Name: NBHS IRA PSWS
Project Number: 115058

Lab Number: L1403551
Report Date: 02/25/14

Parameter	LCS %Recovery	Qual	LCSD %Recovery	Qual	%Recovery Limits	RPD	Qual	RPD Limits
MCP Volatile Organics in Air - Mansfield Lab Associated sample(s): 01 Batch: WG671458-3								
Decane (C10)	96		-		70-130	-		
Benzyl chloride	87		-		70-130	-		
1,3-Dichlorobenzene	95		-		70-130	-		
1,4-Dichlorobenzene	94		-		70-130	-		
sec-Butylbenzene	93		-		70-130	-		
p-Isopropyltoluene	87		-		70-130	-		
1,2-Dichlorobenzene	96		-		70-130	-		
n-Butylbenzene	94		-		70-130	-		
1,2-Dibromo-3-chloropropane	93		-		70-130	-		
Undecane	99		-		70-130	-		
Dodecane (C12)	112		-		70-130	-		
1,2,4-Trichlorobenzene	92		-		50-150	-		
Naphthalene	88		-		50-150	-		
1,2,3-Trichlorobenzene	88		-		70-130	-		
Hexachlorobutadiene	88		-		50-150	-		

Lab Duplicate Analysis
Batch Quality Control

Project Name: NBHS IRA PSWS
Project Number: 115058

Lab Number: L1403551
Report Date: 02/25/14

Parameter	Native Sample	Duplicate Sample	Units	RPD	Qual	RPD Limits
MCP Volatile Organics in Air by SIM - Mansfield Lab Associated sample(s): 02 QC Batch ID: WG670845-5 QC Sample: L1403423-01 Client ID: DUP Sample						
Dichlorodifluoromethane	0.353	0.287	ppbV	21		25
Chloromethane	0.506	0.624	ppbV	21		25
Vinyl chloride	0.029	0.035	ppbV	19		25
Bromomethane	ND	ND	ppbV	NC		25
Chloroethane	ND	ND	ppbV	NC		25
Trichlorofluoromethane	0.301	0.365	ppbV	19		25
1,1-Dichloroethene	ND	ND	ppbV	NC		25
Methylene chloride	ND	ND	ppbV	NC		25
trans-1,2-Dichloroethene	ND	ND	ppbV	NC		25
1,1-Dichloroethane	ND	ND	ppbV	NC		25
cis-1,2-Dichloroethene	ND	0.056	ppbV	NC		25
Chloroform	0.021	0.025	ppbV	17		25
1,2-Dichloroethane	0.026	0.031	ppbV	18		25
1,1,1-Trichloroethane	0.027	0.030	ppbV	11		25
Carbon tetrachloride	0.086	0.098	ppbV	13		25
1,2-Dichloropropane	ND	ND	ppbV	NC		25
Bromodichloromethane	ND	ND	ppbV	NC		25
Trichloroethene	0.427	0.507	ppbV	17		25
cis-1,3-Dichloropropene	ND	ND	ppbV	NC		25

Lab Duplicate Analysis
Batch Quality Control

Project Name: NBHS IRA PSWS
Project Number: 115058

Lab Number: L1403551
Report Date: 02/25/14

Parameter	Native Sample	Duplicate Sample	Units	RPD	RPD Limits
MCP Volatile Organics in Air by SIM - Mansfield Lab Associated sample(s): 02 QC Batch ID: WG670845-5 QC Sample: L1403423-01 Client ID: DUP Sample					
trans-1,3-Dichloropropene	ND	ND	ppbV	NC	25
1,1,2-Trichloroethane	ND	ND	ppbV	NC	25
Dibromochloromethane	ND	ND	ppbV	NC	25
Tetrachloroethene	0.222	0.248	ppbV	11	25
1,1,1,2-Tetrachloroethane	ND	ND	ppbV	NC	25
Chlorobenzene	ND	ND	ppbV	NC	25
Bromoform	ND	ND	ppbV	NC	25
1,1,2,2-Tetrachloroethane	ND	ND	ppbV	NC	25
Benzyl chloride	ND	ND	ppbV	NC	25
1,3-Dichlorobenzene	ND	0.039	ppbV	NC	25
1,4-Dichlorobenzene	ND	ND	ppbV	NC	25
1,2-Dichlorobenzene	ND	ND	ppbV	NC	25

Lab Duplicate Analysis
Batch Quality Control

Project Name: NBHS IRA PSWS
Project Number: 115058

Lab Number: L1403551
Report Date: 02/25/14

Parameter	Native Sample	Duplicate Sample	Units	RPD	RPD Limits
MCP Volatile Organics in Air - Mansfield Lab Associated sample(s): 01 QC Batch ID: WG671458-5 QC Sample: L1403515-02 Client ID: DUP Sample					
Vinyl chloride	ND	ND	ppbV	NC	25
Bromomethane	ND	ND	ppbV	NC	25
Acetone	ND	ND	ppbV	NC	25
1,1-Dichloroethene	ND	ND	ppbV	NC	25
Methylene chloride	ND	ND	ppbV	NC	25
trans-1,2-Dichloroethene	ND	ND	ppbV	NC	25
1,1-Dichloroethane	ND	ND	ppbV	NC	25
Methyl tert butyl ether	2.08	2.16	ppbV	4	25
2-Butanone	56.7	58.7	ppbV	3	25
cis-1,2-Dichloroethene	ND	ND	ppbV	NC	25
Chloroform	ND	ND	ppbV	NC	25
1,2-Dichloroethane	ND	ND	ppbV	NC	25
1,1,1-Trichloroethane	37.9	46.2	ppbV	20	25
Benzene	17.2	17.4	ppbV	1	25
Carbon tetrachloride	ND	ND	ppbV	NC	25
1,2-Dichloropropane	ND	ND	ppbV	NC	25
Bromodichloromethane	ND	ND	ppbV	NC	25
1,4-Dioxane	ND	ND	ppbV	NC	25
Trichloroethene	0.325	0.337	ppbV	4	25

Lab Duplicate Analysis
Batch Quality Control

Project Name: NBHS IRA PSWS
Project Number: 115058

Lab Number: L1403551
Report Date: 02/25/14

Parameter	Native Sample	Duplicate Sample	Units	RPD	RPD Limits
MCP Volatile Organics in Air - Mansfield Lab Associated sample(s): 01 QC Batch ID: WG671458-5 QC Sample: L1403515-02 Client ID: DUP Sample					
cis-1,3-Dichloropropene	ND	ND	ppbV	NC	25
4-Methyl-2-pentanone	1.06	1.08	ppbV	2	25
trans-1,3-Dichloropropene	ND	ND	ppbV	NC	25
1,1,2-Trichloroethane	ND	ND	ppbV	NC	25
Toluene	94.2	102E	ppbV	8	25
Dibromochloromethane	ND	ND	ppbV	NC	25
1,2-Dibromoethane	ND	ND	ppbV	NC	25
Tetrachloroethene	94.5	103E	ppbV	9	25
Chlorobenzene	ND	ND	ppbV	NC	25
Ethylbenzene	15.8	17.0	ppbV	7	25
p/m-Xylene	50.3	54.6	ppbV	8	25
Bromoform	ND	ND	ppbV	NC	25
Styrene	8.89	9.83	ppbV	10	25
1,1,2,2-Tetrachloroethane	ND	ND	ppbV	NC	25
o-Xylene	17.9	19.8	ppbV	10	25
1,3-Dichlorobenzene	ND	ND	ppbV	NC	25
1,4-Dichlorobenzene	ND	ND	ppbV	NC	25
1,2-Dichlorobenzene	ND	ND	ppbV	NC	25
1,2,4-Trichlorobenzene	ND	ND	ppbV	NC	25

Lab Duplicate Analysis
Batch Quality Control

Project Name: NBHS IRA PSWS
Project Number: 115058

Lab Number: L1403551
Report Date: 02/25/14

Parameter	Native Sample	Duplicate Sample	Units	RPD	RPD Limits
MCP Volatile Organics in Air - Mansfield Lab Associated sample(s): 01 QC Batch ID: WG671458-5 QC Sample: L1403515-02 Client ID: DUP Sample					
Naphthalene	0.893	1.05	ppbV	16	25
Hexachlorobutadiene	ND	ND	ppbV	NC	25

Project Name: NBHS IRA PSWS

Lab Number: L1403551

Project Number: 115058

Report Date: 02/25/14

Canister and Flow Controller Information

Samplenum	Client ID	Media ID	Media Type	Date Prepared	Bottle Order	Cleaning Batch ID	Can Leak Check	Initial Pressure (in. Hg)	Pressure on Receipt (in. Hg)	Flow Controler Leak Chk	Flow Out mL/min	Flow In mL/min	% RPD
L1403551-01	VAPOR INLET	0342	#90 SV	02/13/14	98778		-	-	-	Pass	200	209	4
L1403551-01	VAPOR INLET	253	2.7L Can	02/13/14	98778	L1402937-01	Pass	-30.0	-1.9	-	-	-	-
L1403551-02	VAPOR OUTLET	0236	#90 SV	02/13/14	98778		-	-	-	Pass	200	212	6
L1403551-02	VAPOR OUTLET	499	2.7L Can	02/13/14	98778	L1402937-01	Pass	-30.0	-3.3	-	-	-	-

Project Name: BATCH CANISTER CERTIFICATION **Lab Number:** L1402937

Project Number: CANISTER QC BAT **Report Date:** 02/25/14

Air Canister Certification Results

Lab ID:	L1402937-01	Date Collected:	02/05/14 19:10
Client ID:	CAN 499 SHELF 4	Date Received:	02/06/14
Sample Location:		Field Prep:	Not Specified
Matrix:	Air		
Anaytical Method:	48,TO-15		
Analytical Date:	02/08/14 14:01		
Analyst:	MB		

	ppbV			ug/m3				
Parameter	**Results**	**RL**	**MDL**	**Results**	**RL**	**MDL**	**Qualifier**	**Dilution Factor**
Volatile Organics in Air - Mansfield Lab								
Chlorodifluoromethane	ND	0.200	--	ND	0.707	--		1
Propylene	ND	0.500	--	ND	0.861	--		1
Propane	ND	0.500	--	ND	0.902	--		1
Dichlorodifluoromethane	ND	0.200	--	ND	0.989	--		1
Chloromethane	ND	0.200	--	ND	0.413	--		1
Freon-114	ND	0.200	--	ND	1.40	--		1
Methanol	ND	5.00	--	ND	6.55	--		1
Vinyl chloride	ND	0.200	--	ND	0.511	--		1
1,3-Butadiene	ND	0.200	--	ND	0.442	--		1
Butane	ND	0.200	--	ND	0.475	--		1
Bromomethane	ND	0.200	--	ND	0.777	--		1
Chloroethane	ND	0.200	--	ND	0.528	--		1
Ethanol	ND	2.50	--	ND	4.71	--		1
Dichlorofluoromethane	ND	0.200	--	ND	0.842	--		1
Vinyl bromide	ND	0.200	--	ND	0.874	--		1
Acrolein	ND	0.500	--	ND	1.15	--		1
Acetone	ND	1.00	--	ND	2.38	--		1
Acetonitrile	ND	0.200	--	ND	0.336	--		1
Trichlorofluoromethane	ND	0.200	--	ND	1.12	--		1
Isopropanol	ND	0.500	--	ND	1.23	--		1
Acrylonitrile	ND	0.200	--	ND	0.434	--		1
Pentane	ND	0.200	--	ND	0.590	--		1
Ethyl ether	ND	0.200	--	ND	0.606	--		1
1,1-Dichloroethene	ND	0.200	--	ND	0.793	--		1
Tertiary butyl Alcohol	ND	0.500	--	ND	1.52	--		1

Project Name: BATCH CANISTER CERTIFICATION **Lab Number:** L1402937

Project Number: CANISTER QC BAT **Report Date:** 02/25/14

Air Canister Certification Results

Lab ID: L1402937-01 Date Collected: 02/05/14 19:10

Client ID: CAN 499 SHELF 4 Date Received: 02/06/14

Sample Location: Field Prep: Not Specified

	ppbV			ug/m3				
Parameter	**Results**	**RL**	**MDL**	**Results**	**RL**	**MDL**	**Qualifier**	**Dilution Factor**
Volatile Organics in Air - Mansfield Lab								
Methylene chloride	ND	1.00	--	ND	3.47	--		1
3-Chloropropene	ND	0.200	--	ND	0.626	--		1
Carbon disulfide	ND	0.200	--	ND	0.623	--		1
Freon-113	ND	0.200	--	ND	1.53	--		1
trans-1,2-Dichloroethene	ND	0.200	--	ND	0.793	--		1
1,1-Dichloroethane	ND	0.200	--	ND	0.809	--		1
Methyl tert butyl ether	ND	0.200	--	ND	0.721	--		1
Vinyl acetate	ND	0.200	--	ND	0.704	--		1
2-Butanone	ND	0.200	--	ND	0.590	--		1
cis-1,2-Dichloroethene	ND	0.200	--	ND	0.793	--		1
Ethyl Acetate	ND	0.500	--	ND	1.80	--		1
Chloroform	ND	0.200	--	ND	0.977	--		1
Tetrahydrofuran	ND	0.200	--	ND	0.590	--		1
2,2-Dichloropropane	ND	0.200	--	ND	0.924	--		1
1,2-Dichloroethane	ND	0.200	--	ND	0.809	--		1
n-Hexane	ND	0.200	--	ND	0.705	--		1
Diisopropyl ether	ND	0.200	--	ND	0.836	--		1
tert-Butyl Ethyl Ether	ND	0.200	--	ND	0.836	--		1
1,1,1-Trichloroethane	ND	0.200	--	ND	1.09	--		1
1,1-Dichloropropene	ND	0.200	--	ND	0.908	--		1
Benzene	ND	0.200	--	ND	0.639	--		1
Carbon tetrachloride	ND	0.200	--	ND	1.26	--		1
Cyclohexane	ND	0.200	--	ND	0.688	--		1
tert-Amyl Methyl Ether	ND	0.200	--	ND	0.836	--		1
Dibromomethane	ND	0.200	--	ND	1.42	--		1
1,2-Dichloropropane	ND	0.200	--	ND	0.924	--		1
Bromodichloromethane	ND	0.200	--	ND	1.34	--		1
1,4-Dioxane	ND	0.200	--	ND	0.721	--		1

Project Name: BATCH CANISTER CERTIFICATION **Lab Number:** L1402937

Project Number: CANISTER QC BAT **Report Date:** 02/25/14

Air Canister Certification Results

Lab ID: L1402937-01 Date Collected: 02/05/14 19:10

Client ID: CAN 499 SHELF 4 Date Received: 02/06/14

Sample Location: Field Prep: Not Specified

Parameter	ppbV Results	ppbV RL	ppbV MDL	ug/m3 Results	ug/m3 RL	ug/m3 MDL	Qualifier	Dilution Factor
Volatile Organics in Air - Mansfield Lab								
Trichloroethene	ND	0.200	--	ND	1.07	--		1
2,2,4-Trimethylpentane	ND	0.200	--	ND	0.934	--		1
Methyl Methacrylate	ND	0.500	--	ND	2.05	--		1
Heptane	ND	0.200	--	ND	0.820	--		1
cis-1,3-Dichloropropene	ND	0.200	--	ND	0.908	--		1
4-Methyl-2-pentanone	ND	0.200	--	ND	0.820	--		1
trans-1,3-Dichloropropene	ND	0.200	--	ND	0.908	--		1
1,1,2-Trichloroethane	ND	0.200	--	ND	1.09	--		1
Toluene	ND	0.200	--	ND	0.754	--		1
1,3-Dichloropropane	ND	0.200	--	ND	0.924	--		1
2-Hexanone	ND	0.200	--	ND	0.820	--		1
Dibromochloromethane	ND	0.200	--	ND	1.70	--		1
1,2-Dibromoethane	ND	0.200	--	ND	1.54	--		1
Butyl acetate	ND	0.500	--	ND	2.38	--		1
Octane	ND	0.200	--	ND	0.934	--		1
Tetrachloroethene	ND	0.200	--	ND	1.36	--		1
1,1,1,2-Tetrachloroethane	ND	0.200	--	ND	1.37	--		1
Chlorobenzene	ND	0.200	--	ND	0.921	--		1
Ethylbenzene	ND	0.200	--	ND	0.869	--		1
p/m-Xylene	ND	0.400	--	ND	1.74	--		1
Bromoform	ND	0.200	--	ND	2.07	--		1
Styrene	ND	0.200	--	ND	0.852	--		1
1,1,2,2-Tetrachloroethane	ND	0.200	--	ND	1.37	--		1
o-Xylene	ND	0.200	--	ND	0.869	--		1
1,2,3-Trichloropropane	ND	0.200	--	ND	1.21	--		1
Nonane	ND	0.200	--	ND	1.05	--		1
Isopropylbenzene	ND	0.200	--	ND	0.983	--		1
Bromobenzene	ND	0.200	--	ND	0.793	--		1

Project Name: BATCH CANISTER CERTIFICATION **Lab Number:** L1402937

Project Number: CANISTER QC BAT **Report Date:** 02/25/14

Air Canister Certification Results

Lab ID: L1402937-01 Date Collected: 02/05/14 19:10

Client ID: CAN 499 SHELF 4 Date Received: 02/06/14

Sample Location: Field Prep: Not Specified

Parameter	ppbV Results	ppbV RL	ppbV MDL	ug/m3 Results	ug/m3 RL	ug/m3 MDL	Qualifier	Dilution Factor
Volatile Organics in Air - Mansfield Lab								
2-Chlorotoluene	ND	0.200	--	ND	1.04	--		1
n-Propylbenzene	ND	0.200	--	ND	0.983	--		1
4-Chlorotoluene	ND	0.200	--	ND	1.04	--		1
4-Ethyltoluene	ND	0.200	--	ND	0.983	--		1
1,3,5-Trimethylbenzene	ND	0.200	--	ND	0.983	--		1
tert-Butylbenzene	ND	0.200	--	ND	1.10	--		1
1,2,4-Trimethylbenzene	ND	0.200	--	ND	0.983	--		1
Decane	ND	0.200	--	ND	1.16	--		1
Benzyl chloride	ND	0.200	--	ND	1.04	--		1
1,3-Dichlorobenzene	ND	0.200	--	ND	1.20	--		1
1,4-Dichlorobenzene	ND	0.200	--	ND	1.20	--		1
sec-Butylbenzene	ND	0.200	--	ND	1.10	--		1
p-Isopropyltoluene	ND	0.200	--	ND	1.10	--		1
1,2-Dichlorobenzene	ND	0.200	--	ND	1.20	--		1
n-Butylbenzene	ND	0.200	--	ND	1.10	--		1
1,2-Dibromo-3-chloropropane	ND	0.200	--	ND	1.93	--		1
Undecane	ND	0.200	--	ND	1.28	--		1
Dodecane	ND	0.200	--	ND	1.39	--		1
1,2,4-Trichlorobenzene	ND	0.200	--	ND	1.48	--		1
Naphthalene	ND	0.200	--	ND	1.05	--		1
1,2,3-Trichlorobenzene	ND	0.200	--	ND	1.48	--		1
Hexachlorobutadiene	ND	0.200	--	ND	2.13	--		1

	Results	Qualifier	Units	RDL	Dilution Factor
Tentatively Identified Compounds					
No Tentatively Identified Compounds					

Project Name: BATCH CANISTER CERTIFICATION **Lab Number:** L1402937

Project Number: CANISTER QC BAT **Report Date:** 02/25/14

Air Canister Certification Results

Lab ID: L1402937-01 Date Collected: 02/05/14 19:10

Client ID: CAN 499 SHELF 4 Date Received: 02/06/14

Sample Location: Field Prep: Not Specified

Parameter	ppbV Results	ppbV RL	ppbV MDL	ug/m3 Results	ug/m3 RL	ug/m3 MDL	Qualifier	Dilution Factor
Volatile Organics in Air - Mansfield Lab								

Internal Standard	% Recovery	Qualifier	Acceptance Criteria
1,4-Difluorobenzene	92		60-140
Bromochloromethane	94		60-140
chlorobenzene-d5	95		60-140

Project Name: BATCH CANISTER CERTIFICATION **Lab Number:** L1402937

Project Number: CANISTER QC BAT **Report Date:** 02/25/14

Air Canister Certification Results

Lab ID:	L1402937-01	Date Collected:	02/05/14 19:10
Client ID:	CAN 499 SHELF 4	Date Received:	02/06/14
Sample Location:		Field Prep:	Not Specified
Matrix:	Air		
Anaytical Method:	48,TO-15-SIM		
Analytical Date:	02/08/14 14:01		
Analyst:	MB		

	ppbV			ug/m3				
Parameter	**Results**	**RL**	**MDL**	**Results**	**RL**	**MDL**	**Qualifier**	**Dilution Factor**
Volatile Organics in Air by SIM - Mansfield Lab								
Dichlorodifluoromethane	ND	0.050	--	ND	0.247	--		1
Chloromethane	ND	0.500	--	ND	1.03	--		1
Freon-114	ND	0.050	--	ND	0.349	--		1
Vinyl chloride	ND	0.020	--	ND	0.051	--		1
1,3-Butadiene	ND	0.020	--	ND	0.044	--		1
Bromomethane	ND	0.020	--	ND	0.078	--		1
Chloroethane	ND	0.020	--	ND	0.053	--		1
Acetone	ND	2.00	--	ND	4.75	--		1
Trichlorofluoromethane	ND	0.050	--	ND	0.281	--		1
Acrylonitrile	ND	0.500	--	ND	1.09	--		1
1,1-Dichloroethene	ND	0.020	--	ND	0.079	--		1
Methylene chloride	ND	1.00	--	ND	3.47	--		1
Freon-113	ND	0.050	--	ND	0.383	--		1
Halothane	ND	0.050	--	ND	0.404	--		1
trans-1,2-Dichloroethene	ND	0.020	--	ND	0.079	--		1
1,1-Dichloroethane	ND	0.020	--	ND	0.081	--		1
Methyl tert butyl ether	ND	0.020	--	ND	0.072	--		1
2-Butanone	ND	0.500	--	ND	1.47	--		1
cis-1,2-Dichloroethene	ND	0.020	--	ND	0.079	--		1
Chloroform	ND	0.020	--	ND	0.098	--		1
1,2-Dichloroethane	ND	0.020	--	ND	0.081	--		1
1,1,1-Trichloroethane	ND	0.020	--	ND	0.109	--		1
Benzene	ND	0.100	--	ND	0.319	--		1
Carbon tetrachloride	ND	0.020	--	ND	0.126	--		1
1,2-Dichloropropane	ND	0.020	--	ND	0.092	--		1

Project Name: BATCH CANISTER CERTIFICATION **Lab Number:** L1402937

Project Number: CANISTER QC BAT **Report Date:** 02/25/14

Air Canister Certification Results

Lab ID: L1402937-01 Date Collected: 02/05/14 19:10

Client ID: CAN 499 SHELF 4 Date Received: 02/06/14

Sample Location: Field Prep: Not Specified

Parameter	ppbV Results	ppbV RL	ppbV MDL	ug/m3 Results	ug/m3 RL	ug/m3 MDL	Qualifier	Dilution Factor
Volatile Organics in Air by SIM - Mansfield Lab								
Bromodichloromethane	ND	0.020	--	ND	0.134	--		1
1,4-Dioxane	ND	0.100	--	ND	0.360	--		1
Trichloroethene	ND	0.020	--	ND	0.107	--		1
cis-1,3-Dichloropropene	ND	0.020	--	ND	0.091	--		1
4-Methyl-2-pentanone	ND	0.500	--	ND	2.05	--		1
trans-1,3-Dichloropropene	ND	0.020	--	ND	0.091	--		1
1,1,2-Trichloroethane	ND	0.020	--	ND	0.109	--		1
Toluene	ND	0.050	--	ND	0.188	--		1
Dibromochloromethane	ND	0.020	--	ND	0.170	--		1
1,2-Dibromoethane	ND	0.020	--	ND	0.154	--		1
Tetrachloroethene	ND	0.020	--	ND	0.136	--		1
1,1,1,2-Tetrachloroethane	ND	0.020	--	ND	0.137	--		1
Chlorobenzene	ND	0.020	--	ND	0.092	--		1
Ethylbenzene	ND	0.020	--	ND	0.087	--		1
p/m-Xylene	ND	0.040	--	ND	0.174	--		1
Bromoform	ND	0.020	--	ND	0.207	--		1
Styrene	ND	0.020	--	ND	0.085	--		1
1,1,2,2-Tetrachloroethane	ND	0.020	--	ND	0.137	--		1
o-Xylene	ND	0.020	--	ND	0.087	--		1
Isopropylbenzene	ND	0.500	--	ND	2.46	--		1
4-Ethyltoluene	ND	0.020	--	ND	0.098	--		1
1,3,5-Trimethybenzene	ND	0.020	--	ND	0.098	--		1
1,2,4-Trimethylbenzene	ND	0.020	--	ND	0.098	--		1
1,3-Dichlorobenzene	ND	0.020	--	ND	0.120	--		1
1,4-Dichlorobenzene	ND	0.020	--	ND	0.120	--		1
sec-Butylbenzene	ND	0.500	--	ND	2.74	--		1
p-Isopropyltoluene	ND	0.500	--	ND	2.74	--		1
1,2-Dichlorobenzene	ND	0.020	--	ND	0.120	--		1

Project Name: BATCH CANISTER CERTIFICATION **Lab Number:** L1402937

Project Number: CANISTER QC BAT **Report Date:** 02/25/14

Air Canister Certification Results

Lab ID: L1402937-01 Date Collected: 02/05/14 19:10

Client ID: CAN 499 SHELF 4 Date Received: 02/06/14

Sample Location: Field Prep: Not Specified

Parameter	ppbV Results	ppbV RL	ppbV MDL	ug/m3 Results	ug/m3 RL	ug/m3 MDL	Qualifier	Dilution Factor
Volatile Organics in Air by SIM - Mansfield Lab								
n-Butylbenzene	ND	0.500	--	ND	2.74	--		1
1,2,4-Trichlorobenzene	ND	0.050	--	ND	0.371	--		1
Naphthalene	ND	0.050	--	ND	0.262	--		1
1,2,3-Trichlorobenzene	ND	0.050	--	ND	0.371	--		1
Hexachlorobutadiene	ND	0.050	--	ND	0.533	--		1

Internal Standard	% Recovery	Qualifier	Acceptance Criteria
1,4-difluorobenzene	92		60-140
bromochloromethane	94		60-140
chlorobenzene-d5	94		60-140

Project Name: NBHS IRA PSWS
Project Number: 115058

Lab Number: L1403551
Report Date: 02/25/14

Sample Receipt and Container Information

Were project specific reporting limits specified? YES

Reagent H2O Preserved Vials Frozen on: NA

Cooler Information Custody Seal

Cooler	
A	Absent

Container Information

Container ID	Container Type	Cooler	pH	Temp deg C	Pres	Seal	Analysis(*)
L1403551-01A	Canister - 2.7 Liter	N/A	N/A		Y	Absent	MCP-TO15(30)
L1403551-02A	Canister - 2.7 Liter	N/A	N/A		Y	Absent	MCP-TO15-SIM(30)

*Values in parentheses indicate holding time in days

Project Name:	NBHS IRA PSWS	**Lab Number:**	L1403551
Project Number:	115058	**Report Date:**	02/25/14

GLOSSARY

Acronyms

EDL	- Estimated Detection Limit: This value represents the level to which target analyte concentrations are reported as estimated values, when those target analyte concentrations are quantified below the reporting limit (RL). The EDL includes any adjustments from dilutions, concentrations or moisture content, where applicable. The use of EDLs is specific to the analysis of PAHs using Solid-Phase Microextraction (SPME).
EPA	- Environmental Protection Agency.
LCS	- Laboratory Control Sample: A sample matrix, free from the analytes of interest, spiked with verified known amounts of analytes or a material containing known and verified amounts of analytes.
LCSD	- Laboratory Control Sample Duplicate: Refer to LCS.
LFB	- Laboratory Fortified Blank: A sample matrix, free from the analytes of interest, spiked with verified known amounts of analytes or a material containing known and verified amounts of analytes.
MDL	- Method Detection Limit: This value represents the level to which target analyte concentrations are reported as estimated values, when those target analyte concentrations are quantified below the reporting limit (RL). The MDL includes any adjustments from dilutions, concentrations or moisture content, where applicable.
MS	- Matrix Spike Sample: A sample prepared by adding a known mass of target analyte to a specified amount of matrix sample for which an independent estimate of target analyte concentration is available.
MSD	- Matrix Spike Sample Duplicate: Refer to MS.
NA	- Not Applicable.
NC	- Not Calculated: Term is utilized when one or more of the results utilized in the calculation are non-detect at the parameter's reporting unit.
NI	- Not Ignitable.
RL	- Reporting Limit: The value at which an instrument can accurately measure an analyte at a specific concentration. The RL includes any adjustments from dilutions, concentrations or moisture content, where applicable.
RPD	- Relative Percent Difference: The results from matrix and/or matrix spike duplicates are primarily designed to assess the precision of analytical results in a given matrix and are expressed as relative percent difference (RPD). Values which are less than five times the reporting limit for any individual parameter are evaluated by utilizing the absolute difference between the values; although the RPD value will be provided in the report.
SRM	- Standard Reference Material: A reference sample of a known or certified value that is of the same or similar matrix as the associated field samples.

Footnotes

1	- The reference for this analyte should be considered modified since this analyte is absent from the target analyte list of the original method.

Terms

Analytical Method: Both the document from which the method originates and the analytical reference method. (Example: EPA 8260B is shown as 1,8260B.) The codes for the reference method documents are provided in the References section of the Addendum.

Data Qualifiers

A	- Spectra identified as "Aldol Condensation Product".
B	- The analyte was detected above the reporting limit in the associated method blank. Flag only applies to associated field samples that have detectable concentrations of the analyte at less than ten times (10x) the concentration found in the blank. For MCP-related projects, flag only applies to associated field samples that have detectable concentrations of the analyte at less than ten times (10x) the concentration found in the blank. For DOD-related projects, flag only applies to associated field samples that have detectable concentrations of the analyte at less than ten times (10x) the concentration found in the blank AND the analyte was detected above one-half the reporting limit (or above the reporting limit for common lab contaminants) in the associated method blank. For NJ-Air-related projects, flag only applies to associated field samples that have detectable concentrations of the analyte above the reporting limit.
C	- Co-elution: The target analyte co-elutes with a known lab standard (i.e. surrogate, internal standards, etc.) for co-extracted analyses.
D	- Concentration of analyte was quantified from diluted analysis. Flag only applies to field samples that have detectable concentrations of the analyte.
E	- Concentration of analyte exceeds the range of the calibration curve and/or linear range of the instrument.
G	- The concentration may be biased high due to matrix interferences (i.e, co-elution) with non-target compound(s). The result should be considered estimated.
H	- The analysis of pH was performed beyond the regulatory-required holding time of 15 minutes from the time of sample collection.
I	- The lower value for the two columns has been reported due to obvious interference.

Report Format: Data Usability Report

Project Name:	NBHS IRA PSWS	**Lab Number:**	L1403551
Project Number:	115058	**Report Date:**	02/25/14

Data Qualifiers

M - Reporting Limit (RL) exceeds the MCP CAM Reporting Limit for this analyte.

NJ - Presumptive evidence of compound. This represents an estimated concentration for Tentatively Identified Compounds (TICs), where the identification is based on a mass spectral library search.

P - The RPD between the results for the two columns exceeds the method-specified criteria.

Q - The quality control sample exceeds the associated acceptance criteria. For DOD-related projects, LCS and/or Continuing Calibration Standard exceedences are also qualified on all associated sample results. Note: This flag is not applicable for matrix spike recoveries when the sample concentration is greater than 4x the spike added or for batch duplicate RPD when the sample concentrations are less than 5x the RL. (Metals only.)

R - Analytical results are from sample re-analysis.

RE - Analytical results are from sample re-extraction.

S - Analytical results are from modified screening analysis.

J - Estimated value. This represents an estimated concentration for Tentatively Identified Compounds (TICs).

ND - Not detected at the reporting limit (RL) for the sample.

Report Format: Data Usability Report

Project Name:	NBHS IRA PSWS	**Lab Number:**	L1403551
Project Number:	115058	**Report Date:**	02/25/14

REFERENCES

101 Compendium of Methods for the Determination of Toxic Organic Compounds in Ambient Air (EPA/625/R-96/010b:January 1999) with QC Requirements & Performance Standards for the Analysis of TO-15 under the Massachusetts Contingency Plan, WSC-CAM-IXB, July 2010.

LIMITATION OF LIABILITIES

Alpha Analytical performs services with reasonable care and diligence normal to the analytical testing laboratory industry. In the event of an error, the sole and exclusive responsibility of Alpha Analytical shall be to re-perform the work at it's own expense. In no event shall Alpha Analytical be held liable for any incidental, consequential or special damages, including but not limited to, damages in any way connected with the use of, interpretation of, information or analysis provided by Alpha Analytical.

We strongly urge our clients to comply with EPA protocol regarding sample volume, preservation, cooling, containers, sampling procedures, holding time and splitting of samples in the field.

Certification Information

Last revised December 11, 2013

The following analytes are not included in our NELAP Scope of Accreditation:

Westborough Facility
EPA 524.2: Acetone, 2-Butanone (Methyl ethyl ketone (MEK)), Tert-butyl alcohol, 2-Hexanone, Tetrahydrofuran, 1,3,5-Trichlorobenzene, 4-Methyl-2-pentanone (MIBK), Carbon disulfide, Diethyl ether.
EPA 8260C: 1,2,4,5-Tetramethylbenzene, 4-Ethyltoluene, Iodomethane (methyl iodide), Methyl methacrylate, Azobenzene.
EPA 8330A/B: PETN, Picric Acid, Nitroglycerine, 2,6-DANT, 2,4-DANT.
EPA 8270D: 1-Methylnaphthalene, Dimethylnaphthalene,1,4-Diphenylhydrazine.
EPA 625: 4-Chloroaniline, 4-Methylphenol.
SM4500: Soil: Total Phosphorus, TKN, NO2, NO3.
EPA 9071: Total Petroleum Hydrocarbons, Oil & Grease.

Mansfield Facility
EPA 8270D: Biphenyl.
EPA TO-15: Halothane, 2,4,4-Trimethyl-2-pentene, 2,4,4-Trimethyl-1-pentene, Thiophene, 2-Methylthiophene, 3-Methylthiophene, 2-Ethylthiophene, 1,2,3-Trimethylbenzene, Indan, Indene, 1,2,4,5-Tetramethylbenzene, Benzothiophene, 1-Methylnaphthalene.

The following analytes are included in our Massachusetts DEP Scope of Accreditation, Westborough Facility:

Drinking Water
EPA 200.8: Sb,As,Ba,Be,Cd,Cr,Cu,Pb,Ni,Se,Tl; **EPA 200.7**: Ba,Be,Ca,Cd,Cr,Cu,Na; **EPA 245.1:** Mercury;
EPA 300.0: Nitrate-N, Fluoride, Sulfate; **EPA 353.2**: Nitrate-N, Nitrite-N; **SM4500NO3-F**: Nitrate-N, Nitrite-N; **SM4500F-C, SM4500CN-CE, EPA 180.1, SM2130B, SM4500Cl-D, SM2320B, SM2540C, SM4500H-B**
EPA 332: Perchlorate.
Microbiology: **SM9215B; SM9223-P/A, SM9223B-Colilert-QT, Enterolert-QT.**

Non-Potable Water
EPA 200.8: Al,Sb,As,Be,Cd,Cr,Cu,Pb,Mn,Ni,Se,Ag,Tl,Zn;
EPA 200.7: Al,Sb,As,Be,Cd,Ca,Cr,Co,Cu,Fe,Pb,Mg,Mn,Mo,Ni,K,Se,Ag,Na,Sr,Ti,Tl,V,Zn;
EPA 245.1, SM4500H,B, EPA 120.1, SM2510B, SM2540C, SM2340B, SM2320B, SM4500CL-E, SM4500F-BC, SM426C, SM4500NH3-BH, **EPA 350.1**: Ammonia-N, **LACHAT 10-107-06-1-B**: Ammonia-N, **SM4500NO3-F,**
EPA 353.2: Nitrate-N**, SM4500NH3-BC-NES, EPA 351.1, SM4500P-E, SM4500P-B, E, SM5220D, EPA 410.4, SM5210B, SM5310C, SM4500CL-D, EPA 1664, SM14 510AC, EPA 420.1, SM4500-CN-CE, SM2540D.**
EPA 624: Volatile Halocarbons & Aromatics,
EPA 608: Chlordane, Toxaphene, Aldrin, alpha-BHC, beta-BHC, gamma-BHC, delta-BHC, Dieldrin, DDD, DDE, DDT, Endosulfan I, Endosulfan II, Endosulfan sulfate, Endrin, Endrin Aldehyde, Heptachlor, Heptachlor Epoxide, PCBs
EPA 625: SVOC (Acid/Base/Neutral Extractables), **EPA 600/4-81-045**: PCB-Oil.
Microbiology: **SM9223B-Colilert-QT; Enterolert-QT, SM9222D-MF**.

For a complete listing of analytes and methods, please contact your Alpha Project Manager.

AIR ANALYSIS

PAGE 1 OF 1

ALPHA ANALYTICAL — CHAIN OF CUSTODY

320 Forbes Blvd, Mansfield, MA 02048
TEL: 508-822-9300 FAX: 508-822-3288

Date Rec'd in Lab: 2-15-14

ALPHA Job #: L1403549 51

Client Information

Client: TRC
Address: 650 Suffolk St.
Lowell, MA 01854
Phone: 978-970-5600
Fax:
Email: aleonard@trcsolutions.com
dsullivan
☐ These samples have been previously analyzed by Alpha

Project Information

Project Name: NBHS IRA PSWS
Project Location: New Bedford, MA
Project #: 115058
Project Manager: David Sullivan
ALPHA Quote #:

Turn-Around Time

☒ Standard ☐ RUSH (only confirmed if pre-approved!)
Date Due: Time:

Report Information - Data Deliverables

☐ FAX
☐ ADEx
Criteria Checker:
(Default based on Regulatory Criteria Indicated)
Other Formats:
☒ EMAIL (standard pdf report)
☐ Additional Deliverables:
Report to: (if different than Project Manager)

Billing Information

☐ Same as Client info PO #: C115058

Regulatory Requirements/Report Limits

State/Fed	Program	Criteria
MA	MCP	

Other Project Specific Requirements/Comments:

All Columns Below Must Be Filled Out

ALPHA Lab ID (Lab Use Only)	Sample ID	Collection Date	Start Time	End Time	Initial Vacuum	Final Vacuum	Sample Matrix*	Sampler's Initials	Can Size	I D Can	I D - Flow Controller	TO-14A by TO-15	TO-15	TO-15 SIM	APH	FIXED GASES	TO-13A	TO-4 / TO-10	Sample Comments (i.e. PID)
35449 3551-01	Vapor Inlet	2/14/14	1449	1501	-29.3	-1.19	Kg	SV	2.7L	253	342		X						
-02	Vapor Outlet	2/14/14	1457	1508	-29.65	-2.37	Kg	SV	2.7L	499	0236			X					

*SAMPLE MATRIX CODES
AA = Ambient Air (Indoor/Outdoor)
SV = Soil Vapor/Landfill Gas/SVE
Other = Please Specify

Container Type								
				Summa	Summa			

Please print clearly, legibly and completely. Samples can not be logged in and turnaround time clock will not start until any ambiguities are resolved. BY EXECUTING THIS COC, THE CLIENT HAS READ AND AGREES TO BE BOUND BY ALPHA'S TERMS & CONDITIONS.

Relinquished By:	Date/Time	Received By:	Date/Time:
Karen John	2/14/14 15:40	T. Hudell	2/14/14 1540
T. Hudell	2/14/14 1745		2/14/14 17:45
	2/15/14 0400	Mansfield Lab	2/15/14 0400

Date Issued: March 25, 2014

Pace Analytical e-Report

***Issuance of this report is prior to full data package.**

Report prepared for:
TRC ENVIRONMENTAL
WANNALANCIT MILLS
650 SUFFOLK ST
LOWELL, MA 01854
CONTACT: DAVID SULLIVAN

Project ID: 115058 NBHS PCB SAMPLING
Sampling Date(s): March 17, 2014
Lab Report ID: 14030347
Client Service Contact: Chelsea Farmer (518) 346-4592 ext. 3843

Analysis Included:
PCB Analysis (TO-10A)

Test results meet all National Environmental Laboratory Accreditation Conference (NELAC) requirements unless noted in the case narrative. The results contained within the document relate only to the samples included in this report. Pace Analytical is responsible only for the certified testing and is not directly responsible for the integrity of the sample before laboratory receipt. This report shall not be reproduced, except in full, without the written consent of Pace Analytical Services, Inc.

Dan Pfalzer
Laboratory Director

Certifications: New York (EPA: NY00906, ELAP: 11078), New Jersey (NY026), Connecticut (PH-0337), Massachusetts (M-NY906), Virginia (1884)

Pace Analytical Services, Inc. | 2190 Technology Drive | Schenectady, NY 12308
Phone: 518.346.4592 | internet: www.pacelabs.com

This page intentionally left blank.

Table of Contents

Section 1: QUALIFIERS 4

Section 2: SAMPLE CHAIN OF CUSTODY 6

Section 3: SAMPLE RECEIPT 8

Section 4: GC - PCB 10

Section 5: Quality Control Samples (Lab) 13

QUALIFIERS

Qualifier Definitions

Organic Laboratory Qualifiers

B - Denotes analyte observed in associated method blank or extraction blank. Analyte concentration should be considered as estimated.

D - Surrogate recovery not evaluated against control limits due to sample dilution.

E - Denotes analyte concentration exceeded calibration range of instrument. Sample could not be re-analyzed at secondary dilution due to insufficient sample amount, quick turn-around request, sample matrix interference or hold time excursion. Concentration result should be considered as estimated.

J - Denotes an estimated concentration. The concentration result is greater than or equal to the Method Detection Limit (MDL) but less than the Practical Quantitation Limit (PQL).

P - Indicates relative percent difference (RPD) between primary and secondary gas chromatograph (GC) column analysis exceeds 40 % or indicates percent difference (PD) between primary and secondary gas chromatograph (GC) column analysis exceeds 25 %.

U - Denotes analyte not detected at concentration greater than the Practical Quantitation Limit (PQL). PQLs are adjusted for sample weight/volume and dilution factors.

Z - Chromatographic interference due to polychlorinated biphenyl (PCB) co-elution.

* - Value not within control limits.

Inorganic Laboratory Qualifiers

B - Denotes analyte observed in associated method blank or digestion blank. Analyte concentration should be considered as estimated.

E - Denotes analyte concentration exceeded calibration range of instrument. Sample could not be re-analyzed at secondary dilution due to insufficient sample amount, quick turn-around request, sample matrix interference or hold time excursion. Concentration result should be considered as estimated.

J - Denotes an estimated concentration. The concentration result is greater than or equal to the Method Detection Limit (MDL) but less than the Practical Quantitation Limit (PQL).

U - Denotes analyte not detected at concentration greater than the Practical Quantitation Limit (PQL). PQLs are adjusted for sample weight/volume and dilution factors.

* - Value not within control limits.

SAMPLE CHAIN OF CUSTODY

Pace Analytical®
www.pacelabs.com

CHAIN-OF-CUSTODY / Analytical Request Document

The Chain-of-Custody is a LEGAL DOCUMENT. All relevant fields must be completed accurately.

<14030347P1>

140303471

Page: 1 of 1

1739269

Section A Required Client Information:

Company: TRC
Address: 650 SUFFOLK ST
LOWELL MA
Email To: ALEONARD@TRCSOLUTIONS.com
Phone: 978 970 5600 Fax:
Requested Due Date/TAT: 5 DAY

Section B Required Project Information:

Report To: DAVID SULLIVAN
Copy To: AL LEONARD
Purchase Order No.: C115058
Project Name: NBHS 115058 IRA
Project Number: 115058

Section C Invoice Information:

Attention:
Company Name:
Address:
Pace Quote Reference:
Pace Project Manager:
Pace Profile #:

REGULATORY AGENCY

☐ NPDES ☑ GROUND WATER ☐ DRINKING WATER
☐ UST ☑ RCRA ☐ OTHER _____

Site Location STATE: MA

Section D Required Client Information

Matrix Codes MATRIX / CODE

Drinking Water	DW
Water	WT
Waste Water	WW
Product	P
Soil/Solid	SL
Oil	OL
Wipe	WP
Air	AR
Tissue	TS
Other	OT

SAMPLE ID (A-Z, 0-9 / ,-) Sample IDs MUST BE UNIQUE

Requested Analysis Filtered (Y/N)

ITEM #	SAMPLE ID	MATRIX CODE (see valid codes to left)	SAMPLE TYPE (G=GRAB C=COMP)	COLLECTED Composite Start DATE	COLLECTED Composite Start TIME	COLLECTED Composite End/Grab DATE	COLLECTED Composite End/Grab TIME	SAMPLE TEMP AT COLLECTION	# OF CONTAINERS	Preservatives: Unpreserved	H_2SO_4	HNO_3	HCl	NaOH	$Na_2S_2O_3$	Methanol	Other	Analysis Test (Y/N): PCBs by SOXHLET	Residual Chlorine (Y/N)	Pace Project No./ Lab I.D.
1	VAPOR INLET	AR	G	3/17	11:36	3/17	21:36	98	1	✓								✓		AR059935
2	VAPOR OUTLET	AR	G	3/17	11:35	3/17	21:35	93	1	✓								✓		AR059936
3																				
4																				
5																				
6																				
7																				
8																				
9																				
10																				
11																				
12																				

ADDITIONAL COMMENTS	RELINQUISHED BY / AFFILIATION	DATE	TIME	ACCEPTED BY / AFFILIATION	DATE	TIME	SAMPLE CONDITIONS			
10 HR @ 5 ℓ/MIN	JASON FIERO TRC	3/18/14	17:30	VIA FEDEX						
FEDEX # 8015 5077 7452	VIA FEDEX	3/19/14	10:15		3/19/14	10:15	1.8	Y	Y	Y
SHIPPED ON ICE 3/18/14										
							Temp in °C	Received on Ice (Y/N)	Custody Sealed Cooler (Y/N)	Samples Intact (Y/N)

ORIGINAL

SAMPLER NAME AND SIGNATURE

PRINT Name of SAMPLER: JASON C FIERO

SIGNATURE of SAMPLER: Jason C. Fiero

DATE Signed (MM/DD/YY): 03/17/2014

SAMPLE RECEIPT

SAMPLE RECEIPT REPORT
14030347

Pace Analytical Services, Inc.
2190 Technology Drive
Schenectady, NY 12308
Phone: 518.346.4592
Fax: 518.381.6055

CLIENT: TRC ENVIRONMENTAL
PROJECT: 115058 NBHS PCB SAMPLING
LRF: 14030347
REPORT: CLP-LIKE FORMS
EDD: YES
LRF TAT: 1 WEEK

RECEIVED DATE: 03/19/2014 10:15
SHIPPED VIA: FEDEX
SHIPPING ID: 801550777452
NUMBER OF COOLERS: 1
CUSTODY SEAL INTACT: YES
COOLER STATUS: CHILLED
TEMPERATURE(S): [5] 1.8 °C

SAMPLE SEALS INTACT: NA
[1,2] **SAMPLES PRESERVED PER METHOD GUIDANCE:** YES
[3] **SAMPLES REC'D IN HOLDTIME:** YES
DISPOSAL: BY LAB (45 DAYS)
COC DISCREPANCY: NO

COMMENTS:

3

CLIENT ID (LAB ID)	TAT-DUE Date[4]	DATE-TIME SAMPLED	MATRIX	METHOD	TEST DESCRIPTION	QC REQUEST
VAPOR INLET (AR05935)	1 WEEK 03-26-14	03/17/2014 21:36	PF10	EPA TO-10A	PCB Analysis (TO-10A)	
VAPOR OUTLET (AR05936)	1 WEEK 03-26-14	03/17/2014 21:35	PF10	EPA TO-10A	PCB Analysis (TO-10A)	

[1] The pH preservation check of Oil and Grease (Method 1664) is performed as soon as possible after sample receipt and may not be included in this report.
[2] The pH preservation check of aqueous volatile samples is not performed until after the analysis of the sample to maintain zero headspace and is not included in this report.
[3] Samples received for pH analysis are not marked as a hold time exceedance here. SW-846 methods suggests analysis to be done within 15 minutes of sample collection. Because of transportation time it is not possible for the laboratory to perform the test in that time. Sample Certificates of Analysis reports are noted as such.
[4] Samples arriving at the laboratory after 4:00 pm are assigned a due date as if they arrived the following business day unless other arrangements have been made.
[5] All samples which require thermal preservation shall be considered acceptable when received greater than 6 degrees Celsius if they are collected on the same day as received and there is evidence that the chilling process has begun, such as arrival on ice.Control limits are between 0-6 Degrees Celsius. Control limits do not apply for metals analysis.

Reporting Parameters and Lists

EPA TO-10A - PCB Analysis (TO-10A) - (ug/m3)

Aroclor 1016
Aroclor 1221
Aroclor 1232
Aroclor 1242
Aroclor 1248
Aroclor 1254
Aroclor 1260
Total PCB Amount > RL

This report may not be reproduced except in full, without the written approval of Pace Analytical Services, Inc.

2190 Technology Drive Schenectady, NY 12308 Phone 518.346.4592 Fax 518.381.6055

GC - PCB

4

Analytical Sample Results

Job Number: 14030347

Pace Analytical Services, Inc.
2190 Technology Drive
Schenectady, NY 12308
Phone: 518.346.4592
Fax: 518.381.6055

Client: TRC ENVIRONMENTAL
Project: 115058 NBHS PCB SAMPLING
Client Sample ID: VAPOR INLET
Lab Sample ID: 14030347-01 (AR05935)

Collection Date: 03/17/2014 21:36
Sample Matrix: POLYURETHANE FOAM
Received Date: 03/19/2014 10:15
Percent Solid: N/A

	Batch ID	Method	Date	Analyst	Init Wt./Vol.	Final Vol.	Column
Analysis 1:	GC20B-1837-14	EPA Method TO-10A/EPA 8082A	03/21/2014 13:15	MCA	NA	NA	Phenomenex, Zebron ZB-5, 20 m, 0.18 mm ID, 0.18 µm
Analysis 2:	GC20F-1841-14	EPA Method TO-10A/EPA 8082A	03/21/2014 13:15	MCA	NA	NA	Phenomenex, Zebron ZB-1MS, 20 m, 0.18 mm ID, 0.18 µm
Prep 1:	26017	TO-10A	03/20/2014 13:50	MH	3.00m³	5.00 mL	NA

Analyte	CAS No.	Result (ug/m³)	PQL	Dilution Factor	Flags	File ID
Aroclor 1016	12674-11-2	ND	0.0333	1.00	U	GC20F-1841-14
Aroclor 1221	11104-28-2	**0.179**	0.0333	1.00	PB	GC20B-1837-14
Aroclor 1232	11141-16-5	ND	0.0333	1.00	U	GC20F-1841-14
Aroclor 1242	53469-21-9	ND	0.0333	1.00	U	GC20F-1841-14
Aroclor 1248	12672-29-6	**0.826**	0.0333	1.00	PE	GC20F-1841-14
Aroclor 1254	11097-69-1	**0.666**	0.0333	1.00	AF	GC20B-1837-14
Aroclor 1260	11096-82-5	ND	0.0333	1.00	U	GC20F-1841-14
Total PCB Amount > RL	1336-36-3	**1.671**		1.00		GC20F-1841-14

Surrogate	CAS No.	% Recovery	Limits (%)	Q[1]	File ID
Tetrachloro-meta-xylene	877-09-8	84.1	60.0-120		GC20F-1841-14
Decachlorobiphenyl	2051-24-3	80.3	60.0-120		GC20F-1841-14
Tetrachloro-meta-xylene	877-09-8	85.7	60.0-120		GC20B-1837-14
Decachlorobiphenyl	2051-24-3	76.0	60.0-120		GC20B-1837-14

[1]Qualifier column where '*' denotes value outside the control limits or 'D' denotes value was diluted out.

ND: Denotes analyte not detected at a concentration greater than the PQL.
PQL (Practical Quantitation Limit). Denotes lowest analyte concentration reportable for the sample.
Note: Concentration results based upon client supplied air volumes.
AF-Aroclor 1254 is being reported as the best Aroclor match. The sample exhibits an altered PCB pattern.
PB-Aroclor 1221 is being used to report an altered PCB pattern exhibited by the sample. Actual Aroclor 1221 is not present in the sample, but is reported to more accurately quantify PCB present in sample that has undergone environmental alteration.
PE-Aroclor 1248 is being used to report an altered PCB pattern exhibited by the sample. Actual Aroclor 1248 is not present in the sample, but is reported to more accurately quantify PCB present in sample that has undergone environmental alteration.

This report may not be reproduced except in full, without the written approval of Pace Analytical Services, Inc.
2190 Technology Drive | Schenectady, NY 12308 | Phone 518.346.4592 | Fax 518.381.6055 | www.pacelabs.com

Analytical Sample Results

Job Number: 14030347

Pace Analytical Services, Inc.
2190 Technology Drive
Schenectady, NY 12308
Phone: 518.346.4592
Fax: 518.381.6055

Client: TRC ENVIRONMENTAL
Project: 115058 NBHS PCB SAMPLING
Client Sample ID: VAPOR OUTLET
Lab Sample ID: 14030347-02 (AR05936)

Collection Date: 03/17/2014 21:35
Sample Matrix: POLYURETHANE FOAM
Received Date: 03/19/2014 10:15
Percent Solid: N/A

	Batch ID	Method	Date	Analyst	Init Wt./Vol.	Final Vol.	Column
Analysis 1:	GC20F-1841-15	EPA Method TO-10A/EPA 8082A	03/21/2014 13:28	MCA	NA	NA	Phenomenex, Zebron ZB-1MS, 20 m, 0.18 mm ID, 0.18 µm
Prep 1:	26017	TO-10A	03/20/2014 13:50	MH	3.00m³	5.00 mL	NA

Analyte	CAS No.	Result (ug/m³)	PQL	Dilution Factor	Flags	File ID
Aroclor 1016	12674-11-2	ND	0.0333	1.00	U	GC20F-1841-15
Aroclor 1221	11104-28-2	ND	0.0333	1.00	U	GC20F-1841-15
Aroclor 1232	11141-16-5	ND	0.0333	1.00	U	GC20F-1841-15
Aroclor 1242	53469-21-9	ND	0.0333	1.00	U	GC20F-1841-15
Aroclor 1248	12672-29-6	ND	0.0333	1.00	U	GC20F-1841-15
Aroclor 1254	11097-69-1	ND	0.0333	1.00	U	GC20F-1841-15
Aroclor 1260	11096-82-5	ND	0.0333	1.00	U	GC20F-1841-15
Total PCB Amount > RL	1336-36-3	ND		1.00	U	GC20F-1841-15

Surrogate	CAS No.	% Recovery	Limits (%)	Q[1]	File ID
Tetrachloro-meta-xylene	877-09-8	83.0	60.0-120		GC20F-1841-15
Decachlorobiphenyl	2051-24-3	82.8	60.0-120		GC20F-1841-15
Tetrachloro-meta-xylene	877-09-8	83.5	60.0-120		GC20B-1837-15
Decachlorobiphenyl	2051-24-3	79.2	60.0-120		GC20B-1837-15

[1]Qualifier column where '*' denotes value outside the control limits or 'D' denotes value was diluted out.

ND: Denotes analyte not detected at a concentration greater than the PQL.
PQL (Practical Quantitation Limit). Denotes lowest analyte concentration reportable for the sample.
Note: Concentration results based upon client supplied air volumes.

4

This report may not be reproduced except in full, without the written approval of Pace Analytical Services, Inc.
2190 Technology Drive | Schenectady, NY 12308 | Phone 518.346.4592 | Fax 518.381.6055 | www.pacelabs.com

Quality Control Samples (Lab)

5

Quality Control Results
Method Blank

Job Number: 14030347

Pace Analytical Services, Inc.
2190 Technology Drive
Schenectady, NY 12308
Phone: 518.346.4592
Fax: 518.381.6055

Client: TRC ENVIRONMENTAL
Project: 115058 NBHS PCB SAMPLING
Client Sample ID: Method Blank (AR05935BRR1)
Lab Sample ID: PBLK-97

Collection Date: N/A
Sample Matrix: POLYURETHANE FOAM
Received Date: N/A
Percent Solid: N/A

	Batch ID	Method	Date	Analyst	Init Wt./Vol.	Final Vol.	Column
Analysis 1:	GC20B-1837-11	EPA Method TO-10A/EPA 8082A	03/21/2014 12:38	MCA	NA	NA	Phenomenex, Zebron ZB-5, 20 m, 0.18 mm ID, 0.18 µm
Prep 1:	26017	TO-10A	03/20/2014 13:50	MH	0.00m³	5.00 mL	NA

Analyte	CAS No.	Result (ug)	PQL	Dilution Factor	Flags	File ID
Aroclor 1016	12674-11-2	ND	0.100	1.00	U	GC20B-1837-11
Aroclor 1221	11104-28-2	ND	0.100	1.00	U	GC20B-1837-11
Aroclor 1232	11141-16-5	ND	0.100	1.00	U	GC20B-1837-11
Aroclor 1242	53469-21-9	ND	0.100	1.00	U	GC20B-1837-11
Aroclor 1248	12672-29-6	ND	0.100	1.00	U	GC20B-1837-11
Aroclor 1254	11097-69-1	ND	0.100	1.00	U	GC20B-1837-11
Aroclor 1260	11096-82-5	ND	0.100	1.00	U	GC20B-1837-11
Total PCB Amount > RL	1336-36-3	ND		1.00	U	GC20B-1837-11

Surrogate	CAS No.	% Recovery	Limits (%)	Q[1]	File ID
Tetrachloro-meta-xylene	877-09-8	86.1	60.0-120		GC20B-1837-11
Decachlorobiphenyl	2051-24-3	78.8	60.0-120		GC20B-1837-11

[1]Qualifier column where '*' denotes value outside the control limits or 'D' denotes value was diluted out.

ND: Denotes analyte not detected at a concentration greater than the PQL.
PQL (Practical Quantitation Limit). Denotes lowest analyte concentration reportable for the sample.

5

This report may not be reproduced except in full, without the written approval of Pace Analytical Services, Inc.
2190 Technology Drive | Schenectady, NY 12308 | Phone 518.346.4592 | Fax 518.381.6055 | www.pacelabs.com

Quality Control Results
Method Blank

Job Number: 14030347

Pace Analytical Services, Inc.
2190 Technology Drive
Schenectady, NY 12308
Phone: 518.346.4592
Fax: 518.381.6055

Client: TRC ENVIRONMENTAL
Project: 115058 NBHS PCB SAMPLING
Client Sample ID: Method Blank (AR05935BRR1)
Lab Sample ID: PBLK-97

Collection Date: N/A
Sample Matrix: POLYURETHANE FOAM
Received Date: N/A
Percent Solid: N/A

	Batch ID	Method	Date	Analyst	Init Wt./Vol.	Final Vol.	Column
Analysis 1:	GC20F-1841-11	EPA Method TO-10A/EPA 8082A	03/21/2014 12:38	MCA	NA	NA	Phenomenex, Zebron ZB-1MS, 20 m, 0.18 mm ID, 0.18 µm
Prep 1:	26017	TO-10A	03/20/2014 13:50	MH	0.00m³	5.00 mL	NA

Analyte	CAS No.	Result (ug)	PQL	Dilution Factor	Flags	File ID
Aroclor 1016	12674-11-2	ND	0.100	1.00	U	GC20F-1841-11
Aroclor 1221	11104-28-2	ND	0.100	1.00	U	GC20F-1841-11
Aroclor 1232	11141-16-5	ND	0.100	1.00	U	GC20F-1841-11
Aroclor 1242	53469-21-9	ND	0.100	1.00	U	GC20F-1841-11
Aroclor 1248	12672-29-6	ND	0.100	1.00	U	GC20F-1841-11
Aroclor 1254	11097-69-1	ND	0.100	1.00	U	GC20F-1841-11
Aroclor 1260	11096-82-5	ND	0.100	1.00	U	GC20F-1841-11
Total PCB Amount > RL	1336-36-3	ND		1.00	U	GC20F-1841-11

Surrogate	CAS No.	% Recovery	Limits (%)	Q[1]	File ID
Tetrachloro-meta-xylene	877-09-8	87.1	60.0-120		GC20F-1841-11
Decachlorobiphenyl	2051-24-3	84.5	60.0-120		GC20F-1841-11

[1]Qualifier column where '*' denotes value outside the control limits or 'D' denotes value was diluted out.

ND: Denotes analyte not detected at a concentration greater than the PQL.
PQL (Practical Quantitation Limit). Denotes lowest analyte concentration reportable for the sample.

5

This report may not be reproduced except in full, without the written approval of Pace Analytical Services, Inc.
2190 Technology Drive | Schenectady, NY 12308 | Phone 518.346.4592 | Fax 518.381.6055 | www.pacelabs.com

Quality Control Results
Lab Control Sample (LCS)
Job Number: 14030347

Pace Analytical Services, Inc.
2190 Technology Drive
Schenectady, NY 12308
Phone: 518.346.4592
Fax: 518.381.6055

Client: TRC ENVIRONMENTAL
Project: 115058 NBHS PCB SAMPLING
Client Sample ID: Lab Control Sample (AR05935LRR1)
Lab Sample ID: LCS-97

Collection Date: N/A
Sample Matrix: POLYURETHANE FOAM
Received Date: N/A
Percent Solid: N/A

	Batch ID	Method	Date	Analyst	Init Wt./Vol.	Final Vol.	Column
Analysis 1:	GC20B-1837-12	EPA Method TO-10A/EPA 8082A	03/21/2014 12:50	MCA	NA	NA	Phenomenex, Zebron ZB-5, 20 m, 0.18 mm ID, 0.18 µm
Prep 1:	26017	TO-10A	03/20/2014 13:50	MH	0.00m³	5.00 mL	NA

Analyte Spiked	CAS No.	Added (ug)	LCS (ug)	LCS % Rec.	Q[1]	Limits (%)
Aroclor 1242	53469-21-9	1.00	0.915	91.5		70.0-130

[1]Qualifier column where '*' denotes value outside the control limits. Note: RPD criteria does not apply if either the sample and duplicate sample are not detected.

5

Surrogate	CAS No.	% Recovery	Limits (%)	Q[1]	File ID
Tetrachloro-meta-xylene	877-09-8	84.9	60.0-120		GC20B-1837-12
Decachlorobiphenyl	2051-24-3	77.6	60.0-120		GC20B-1837-12

[1]Qualifier column where '*' denotes value outside the control limits or 'D' denotes value was diluted out.

ND: Denotes analyte not detected at a concentration greater than the PQL.
PQL (Practical Quantitation Limit). Denotes lowest analyte concentration reportable for the sample.

This report may not be reproduced except in full, without the written approval of Pace Analytical Services, Inc.
2190 Technology Drive | Schenectady, NY 12308 | Phone 518.346.4592 | Fax 518.381.6055 | www.pacelabs.com

Quality Control Results
Lab Control Sample (LCS)
Job Number: 14030347

Pace Analytical Services, Inc.
2190 Technology Drive
Schenectady, NY 12308
Phone: 518.346.4592
Fax: 518.381.6055

Client: TRC ENVIRONMENTAL
Project: 115058 NBHS PCB SAMPLING
Client Sample ID: Lab Control Sample (AR05935LRR1)
Lab Sample ID: LCS-97

Collection Date: N/A
Sample Matrix: POLYURETHANE FOAM
Received Date: N/A
Percent Solid: N/A

	Batch ID	Method	Date	Analyst	Init Wt./Vol.	Final Vol.	Column
Analysis 1:	GC20F-1841-12	EPA Method TO-10A/EPA 8082A	03/21/2014 12:50	MCA	NA	NA	Phenomenex, Zebron ZB-1MS, 20 m, 0.18 mm ID, 0.18 µm
Prep 1:	26017	TO-10A	03/20/2014 13:50	MH	0.00m³	5.00 mL	NA

Analyte Spiked	CAS No.	Added (ug)	LCS (ug)	LCS % Rec.	Q[1]	Limits (%)
Aroclor 1242	53469-21-9	1.00	0.910	91.0		70.0-130

[1]Qualifier column where '*' denotes value outside the control limits. Note: RPD criteria does not apply if either the sample and duplicate sample are not detected.

Surrogate	CAS No.	% Recovery	Limits (%)	Q[1]	File ID
Tetrachloro-meta-xylene	877-09-8	86.0	60.0-120		GC20F-1841-12
Decachlorobiphenyl	2051-24-3	81.8	60.0-120		GC20F-1841-12

[1]Qualifier column where '*' denotes value outside the control limits or 'D' denotes value was diluted out.

ND: Denotes analyte not detected at a concentration greater than the PQL.
PQL (Practical Quantitation Limit). Denotes lowest analyte concentration reportable for the sample.

5

This report may not be reproduced except in full, without the written approval of Pace Analytical Services, Inc.
2190 Technology Drive | Schenectady, NY 12308 | Phone 518.346.4592 | Fax 518.381.6055 | www.pacelabs.com

Quality Control Results
Lab Control Sample - Duplicate (LCSD)
Job Number: 14030347

Pace Analytical Services, Inc.
2190 Technology Drive
Schenectady, NY 12308
Phone: 518.346.4592
Fax: 518.381.6055

Client: TRC ENVIRONMENTAL
Project: 115058 NBHS PCB SAMPLING
Client Sample ID: Lab Control Sample - Duplicate (AR05935SRR1)
Lab Sample ID: LCSD-97

Collection Date: N/A
Sample Matrix: POLYURETHANE FOAM
Received Date: N/A
Percent Solid: N/A

	Batch ID	Method	Date	Analyst	Init Wt./Vol.	Final Vol.	Column
Analysis 1:	GC20B-1837-13	EPA Method TO-10A/EPA 8082A	03/21/2014 13:03	MCA	NA	NA	Phenomenex, Zebron ZB-5, 20 m, 0.18 mm ID, 0.18 µm
Prep 1:	26017	TO-10A	03/20/2014 13:50	MH	0.00m³	5.00 mL	NA

Analyte Spiked	CAS No.	Added (ug)	LCSD (ug)	LCSD % Rec.	Q[1]	Limits (%)	Precision: LCS % Rec.	Precision: RPD	Precision: Q[1]	Precision: Limits (%)
Aroclor 1242	53469-21-9	1.00	0.956	95.6		70.0-130	91.5	4.93		20

[1]Qualifier column where '*' denotes value outside the control limits. Note: RPD criteria does not apply if either the sample and duplicate sample are not detected.

Surrogate	CAS No.	% Recovery	Limits (%)	Q[1]	File ID
Tetrachloro-meta-xylene	877-09-8	89.1	60.0-120		GC20B-1837-13
Decachlorobiphenyl	2051-24-3	80.6	60.0-120		GC20B-1837-13

[1]Qualifier column where '*' denotes value outside the control limits or 'D' denotes value was diluted out.

ND: Denotes analyte not detected at a concentration greater than the PQL.
PQL (Practical Quantitation Limit). Denotes lowest analyte concentration reportable for the sample.

5

This report may not be reproduced except in full, without the written approval of Pace Analytical Services, Inc.
2190 Technology Drive | Schenectady, NY 12308 | Phone 518.346.4592 | Fax 518.381.6055 | www.pacelabs.com

Quality Control Results
Lab Control Sample - Duplicate (LCSD)
Job Number: 14030347

Pace Analytical Services, Inc.
2190 Technology Drive
Schenectady, NY 12308
Phone: 518.346.4592
Fax: 518.381.6055

Client: TRC ENVIRONMENTAL
Project: 115058 NBHS PCB SAMPLING
Client Sample ID: Lab Control Sample - Duplicate (AR05935SRR1)
Lab Sample ID: LCSD-97

Collection Date: N/A
Sample Matrix: POLYURETHANE FOAM
Received Date: N/A
Percent Solid: N/A

	Batch ID	Method	Date	Analyst	Init Wt./Vol.	Final Vol.	Column
Analysis 1:	GC20F-1841-13	EPA Method TO-10A/EPA 8082A	03/21/2014 13:03	MCA	NA	NA	Phenomenex, Zebron ZB-1MS, 20 m, 0.18 mm ID, 0.18 µm
Prep 1:	26017	TO-10A	03/20/2014 13:50	MH	0.00m³	5.00 mL	NA

Analyte Spiked	CAS No.	Added (ug)	LCSD (ug)	LCSD % Rec.	Q[1]	Limits (%)	Precision: LCS % Rec.	Precision: RPD	Precision: Q[1]	Precision: Limits (%)
Aroclor 1242	53469-21-9	1.00	0.907	90.7		70.0-130	91.0	0.878		20

[1]Qualifier column where '*' denotes value outside the control limits. Note: RPD criteria does not apply if either the sample and duplicate sample are not detected.

Surrogate	CAS No.	% Recovery	Limits (%)	Q[1]	File ID
Tetrachloro-meta-xylene	877-09-8	83.7	60.0-120		GC20F-1841-13
Decachlorobiphenyl	2051-24-3	81.3	60.0-120		GC20F-1841-13

[1]Qualifier column where '*' denotes value outside the control limits or 'D' denotes value was diluted out.

ND: Denotes analyte not detected at a concentration greater than the PQL.
PQL (Practical Quantitation Limit). Denotes lowest analyte concentration reportable for the sample.

5

This report may not be reproduced except in full, without the written approval of Pace Analytical Services, Inc.
2190 Technology Drive | Schenectady, NY 12308 | Phone 518.346.4592 | Fax 518.381.6055 | www.pacelabs.com

ANALYTICAL REPORT

Lab Number:	L1405769
Client:	TRC Environmental Consultants Wannalancit Mills 650 Suffolk Street Lowell, MA 01854
ATTN:	David Sullivan
Phone:	(978) 656-3565
Project Name:	NBHS IRA O&M
Project Number:	115058
Report Date:	03/26/14

The original project report/data package is held by Alpha Analytical. This report/data package is paginated and should be reproduced only in its entirety. Alpha Analytical holds no responsibility for results and/or data that are not consistent with the original.

Certifications & Approvals: NY (11627), CT (PH-0141), NH (2206), NJ NELAP (MA015), RI (LAO00299), PA (68-02089), LA NELAP (03090), FL (E87814), TX (T104704419), WA (C954), DOD (L2217.01), USDA (Permit #P330-11-00109), US Army Corps of Engineers.

320 Forbes Boulevard, Mansfield, MA 02048-1806
508-822-9300 (Fax) 508-822-3288 800-624-9220 - www.alphalab.com

Project Name: NBHS IRA O&M
Project Number: 115058

Lab Number: L1405769
Report Date: 03/26/14

Alpha Sample ID	Client ID	Sample Location	Collection Date/Time
L1405769-01	VAPOR INLET	NEW BEDFORD, MA	03/17/14 21:48
L1405769-02	VAPOR OUTLET	NEW BEDFORD, MA	03/17/14 21:51

Project Name: NBHS IRA O&M **Lab Number:** L1405769

Project Number: 115058 **Report Date:** 03/26/14

MADEP MCP Response Action Analytical Report Certification

This form provides certifications for all samples performed by MCP methods. Please refer to the Sample Results and Container Information sections of this report for specification of MCP methods used for each analysis. The following questions pertain only to MCP Analytical Methods.

An affirmative response to questions A through F is required for "Presumptive Certainty" status		
A	Were all samples received in a condition consistent with those described on the Chain-of-Custody, properly preserved (including temperature) in the field or laboratory, and prepared/analyzed within method holding times?	YES
B	Were the analytical method(s) and all associated QC requirements specified in the selected CAM protocol(s) followed?	YES
C	Were all required corrective actions and analytical response actions specified in the selected CAM protocol(s) implemented for all identified performance standard non-conformances?	YES
D	Does the laboratory report comply with all the reporting requirements specified in CAM VII A, "Quality Assurance and Quality Control Guidelines for the Acquisition and Reporting of Analytical Data?"	YES
E a.	VPH, EPH, and APH Methods only: Was each method conducted without significant modification(s)? (Refer to the individual method(s) for a list of significant modifications).	N/A
E b.	APH and TO-15 Methods only: Was the complete analyte list reported for each method?	YES
F	Were all applicable CAM protocol QC and performance standard non-conformances identified and evaluated in a laboratory narrative (including all "No" responses to Questions A through E)?	YES

A response to questions G, H and I is required for "Presumptive Certainty" status		
G	Were the reporting limits at or below all CAM reporting limits specified in the selected CAM protocol(s)?	NO
H	Were all QC performance standards specified in the CAM protocol(s) achieved?	YES
I	Were results reported for the complete analyte list specified in the selected CAM protocol(s)?	YES

For any questions answered "No", please refer to the case narrative section on the following page(s).

Please note that sample matrix information is located in the Sample Results section of this report.

Project Name: NBHS IRA O&M **Lab Number:** L1405769
Project Number: 115058 **Report Date:** 03/26/14

Case Narrative

The samples were received in accordance with the Chain of Custody and no significant deviations were encountered during the preparation or analysis unless otherwise noted. Sample Receipt, Container Information, and the Chain of Custody are located at the back of the report.

Results contained within this report relate only to the samples submitted under this Alpha Lab Number and meet all of the requirements of NELAC, for all NELAC accredited parameters. The data presented in this report is organized by parameter (i.e. VOC, SVOC, etc.). Sample specific Quality Control data (i.e. Surrogate Spike Recovery) is reported at the end of the target analyte list for each individual sample, followed by the Laboratory Batch Quality Control at the end of each parameter. If a sample was re-analyzed or re-extracted due to a required quality control corrective action and if both sets of data are reported, the Laboratory ID of the re-analysis or re-extraction is designated with an "R" or "RE", respectively. When multiple Batch Quality Control elements are reported (e.g. more than one LCS), the associated samples for each element are noted in the grey shaded header line of each data table. Any Laboratory Batch, Sample Specific % recovery or RPD value that is outside the listed Acceptance Criteria is bolded in the report. Performance criteria for CAM and RCP methods allow for some LCS compound failures to occur and still be within method compliance. In these instances, the specific failures are not narrated but are noted in the associated QC table. This information is also incorporated in the Data Usability format for our Data Merger tool where it can be reviewed along with any associated usability implications. Soil/sediments, solids and tissues are reported on a dry weight basis unless otherwise noted. Definitions of all data qualifiers and acronyms used in this report are provided in the Glossary located at the back of the report.

In reference to questions H (CAM) or 4 (RCP) when "NO" is checked, the performance criteria for CAM and RCP methods allow for some quality control failures to occur and still be within method compliance. In these instances the specific failure is not narrated but noted in the associated QC table. The information is also incorporated in the Data Usability format of our Data Merger tool where it can be reviewed along with any associated usability implications.

Please see the associated ADEx data file for a comparison of laboratory reporting limits that were achieved with the regulatory Numerical Standards requested on the Chain of Custody.

HOLD POLICY
For samples submitted on hold, Alpha's policy is to hold samples (with the exception of Air canisters) free of charge for 21 calendar days from the date the project is completed. After 21 calendar days, we will dispose of all samples submitted including those put on hold unless you have contacted your Client Service Representative and made arrangements for Alpha to continue to hold the samples. Air canisters will be disposed after 3 business days from the date the project is completed.

Please contact Client Services at 800-624-9220 with any questions.

Project Name: NBHS IRA O&M **Lab Number:** L1405769
Project Number: 115058 **Report Date:** 03/26/14

Case Narrative (continued)

MCP Related Narratives

Canisters were released from the laboratory on March 17, 2014. The canister certification data is provided as an addendum.

MCP Volatile Organics in Air

In reference to question G:

One or more of the target analytes did not achieve the requested CAM reporting limits.

Sample L1405769-01 results for Acetone should be considered estimated due to co-elution with a non-target peak.

I, the undersigned, attest under the pains and penalties of perjury that, to the best of my knowledge and belief and based upon my personal inquiry of those responsible for providing the information contained in this analytical report, such information is accurate and complete. This certificate of analysis is not complete unless this page accompanies any and all pages of this report.

Authorized Signature: Christopher J. Anderson

Title: Technical Director/Representative Date: 03/26/14

AIR

Project Name: NBHS IRA O&M
Project Number: 115058
Lab Number: L1405769
Report Date: 03/26/14

SAMPLE RESULTS

Lab ID: L1405769-01
Client ID: VAPOR INLET
Sample Location: NEW BEDFORD, MA
Matrix: Soil_Vapor
Anaytical Method: 101,TO-15
Analytical Date: 03/25/14 05:10
Analyst: RY

Date Collected: 03/17/14 21:48
Date Received: 03/19/14
Field Prep: Not Specified

Parameter	ppbV Results	ppbV RL	ppbV MDL	ug/m3 Results	ug/m3 RL	ug/m3 MDL	Qualifier	Dilution Factor
MCP Volatile Organics in Air - Mansfield Lab								
Vinyl chloride	3.94	0.200	--	10.1	0.511	--		1
Bromomethane	ND	0.200	--	ND	0.777	--		1
Acetone	1.49	1.00	--	3.54	2.38	--		1
1,1-Dichloroethene	ND	0.200	--	ND	0.793	--		1
Methylene chloride	ND	1.40	--	ND	4.86	--		1
trans-1,2-Dichloroethene	2.49	0.200	--	9.87	0.793	--		1
1,1-Dichloroethane	ND	0.200	--	ND	0.809	--		1
Methyl tert butyl ether	ND	0.200	--	ND	0.721	--		1
2-Butanone	0.604	0.200	--	1.78	0.590	--		1
cis-1,2-Dichloroethene	6.23	0.200	--	24.7	0.793	--		1
Chloroform	ND	0.200	--	ND	0.977	--		1
1,2-Dichloroethane	ND	0.200	--	ND	0.809	--		1
1,1,1-Trichloroethane	ND	0.200	--	ND	1.09	--		1
Benzene	ND	0.200	--	ND	0.639	--		1
Carbon tetrachloride	ND	0.200	--	ND	1.26	--		1
1,2-Dichloropropane	ND	0.200	--	ND	0.924	--		1
Bromodichloromethane	ND	0.200	--	ND	1.34	--		1
1,4-Dioxane	ND	0.200	--	ND	0.721	--		1
Trichloroethene	0.900	0.200	--	4.84	1.07	--		1
cis-1,3-Dichloropropene	ND	0.200	--	ND	0.908	--		1
4-Methyl-2-pentanone	ND	0.200	--	ND	0.820	--		1
trans-1,3-Dichloropropene	ND	0.200	--	ND	0.908	--		1
1,1,2-Trichloroethane	ND	0.200	--	ND	1.09	--		1
Toluene	0.688	0.200	--	2.59	0.754	--		1

Project Name: NBHS IRA O&M
Project Number: 115058
Lab Number: L1405769
Report Date: 03/26/14

SAMPLE RESULTS

Lab ID: L1405769-01
Client ID: VAPOR INLET
Sample Location: NEW BEDFORD, MA
Date Collected: 03/17/14 21:48
Date Received: 03/19/14
Field Prep: Not Specified

Parameter	ppbV Results	ppbV RL	ppbV MDL	ug/m3 Results	ug/m3 RL	ug/m3 MDL	Qualifier	Dilution Factor
MCP Volatile Organics in Air - Mansfield Lab								
Dibromochloromethane	ND	0.200	--	ND	1.70	--		1
1,2-Dibromoethane	ND	0.200	--	ND	1.54	--		1
Tetrachloroethene	ND	0.200	--	ND	1.36	--		1
Chlorobenzene	ND	0.200	--	ND	0.921	--		1
Ethylbenzene	ND	0.200	--	ND	0.869	--		1
p/m-Xylene	ND	0.400	--	ND	1.74	--		1
Bromoform	ND	0.200	--	ND	2.07	--		1
Styrene	ND	0.200	--	ND	0.852	--		1
1,1,2,2-Tetrachloroethane	ND	0.200	--	ND	1.37	--		1
o-Xylene	ND	0.200	--	ND	0.869	--		1
1,3-Dichlorobenzene	ND	0.200	--	ND	1.20	--		1
1,4-Dichlorobenzene	ND	0.200	--	ND	1.20	--		1
1,2-Dichlorobenzene	ND	0.200	--	ND	1.20	--		1
1,2,4-Trichlorobenzene	ND	0.200	--	ND	1.48	--		1
Naphthalene	ND	0.200	--	ND	1.05	--		1
Hexachlorobutadiene	ND	0.200	--	ND	2.13	--		1

Internal Standard	% Recovery	Qualifier	Acceptance Criteria
1,4-Difluorobenzene	86		60-140
Bromochloromethane	81		60-140
chlorobenzene-d5	95		60-140

Project Name: NBHS IRA O&M
Project Number: 115058
Lab Number: L1405769
Report Date: 03/26/14

SAMPLE RESULTS

Lab ID: L1405769-02
Client ID: VAPOR OUTLET
Sample Location: NEW BEDFORD, MA
Matrix: Soil_Vapor
Anaytical Method: 101,TO15-SIM
Analytical Date: 03/25/14 04:38
Analyst: RY

Date Collected: 03/17/14 21:51
Date Received: 03/19/14
Field Prep: Not Specified

Parameter	ppbV Results	ppbV RL	ppbV MDL	ug/m3 Results	ug/m3 RL	ug/m3 MDL	Qualifier	Dilution Factor
MCP Volatile Organics in Air by SIM - Mansfield Lab								
Vinyl chloride	3.86	0.020	--	9.87	0.051	--		1
Bromomethane	ND	0.020	--	ND	0.078	--		1
Acetone	1.79	1.00	--	4.25	2.38	--		1
1,1-Dichloroethene	ND	0.020	--	ND	0.079	--		1
Methylene chloride	ND	1.40	--	ND	4.86	--		1
trans-1,2-Dichloroethene	4.70	0.020	--	18.6	0.079	--		1
1,1-Dichloroethane	ND	0.020	--	ND	0.081	--		1
Methyl tert butyl ether	ND	0.020	--	ND	0.072	--		1
2-Butanone	0.263	0.200	--	0.776	0.590	--		1
cis-1,2-Dichloroethene	12.3	0.020	--	48.8	0.079	--		1
Chloroform	0.231	0.020	--	1.13	0.098	--		1
1,2-Dichloroethane	ND	0.020	--	ND	0.081	--		1
1,1,1-Trichloroethane	ND	0.020	--	ND	0.109	--		1
Benzene	0.417	0.100	--	1.33	0.319	--		1
Carbon tetrachloride	ND	0.020	--	ND	0.126	--		1
1,2-Dichloropropane	ND	0.020	--	ND	0.092	--		1
Bromodichloromethane	ND	0.020	--	ND	0.134	--		1
1,4-Dioxane	ND	0.100	--	ND	0.360	--		1
Trichloroethene	ND	0.020	--	ND	0.107	--		1
cis-1,3-Dichloropropene	ND	0.020	--	ND	0.091	--		1
4-Methyl-2-pentanone	ND	0.200	--	ND	0.820	--		1
trans-1,3-Dichloropropene	ND	0.020	--	ND	0.091	--		1
1,1,2-Trichloroethane	ND	0.020	--	ND	0.109	--		1
Toluene	0.137	0.050	--	0.516	0.188	--		1

Project Name: NBHS IRA O&M
Project Number: 115058
Lab Number: L1405769
Report Date: 03/26/14

SAMPLE RESULTS

Lab ID: L1405769-02
Client ID: VAPOR OUTLET
Sample Location: NEW BEDFORD, MA
Date Collected: 03/17/14 21:51
Date Received: 03/19/14
Field Prep: Not Specified

Parameter	ppbV Results	ppbV RL	ppbV MDL	ug/m3 Results	ug/m3 RL	ug/m3 MDL	Qualifier	Dilution Factor
MCP Volatile Organics in Air by SIM - Mansfield Lab								
Dibromochloromethane	ND	0.020	--	ND	0.170	--		1
1,2-Dibromoethane	ND	0.020	--	ND	0.154	--		1
Tetrachloroethene	ND	0.020	--	ND	0.136	--		1
Chlorobenzene	ND	0.020	--	ND	0.092	--		1
Ethylbenzene	ND	0.020	--	ND	0.087	--		1
p/m-Xylene	0.058	0.040	--	0.252	0.174	--		1
Bromoform	ND	0.020	--	ND	0.207	--		1
Styrene	ND	0.020	--	ND	0.085	--		1
1,1,2,2-Tetrachloroethane	ND	0.020	--	ND	0.137	--		1
o-Xylene	0.023	0.020	--	0.10	0.087	--		1
1,3-Dichlorobenzene	ND	0.020	--	ND	0.120	--		1
1,4-Dichlorobenzene	ND	0.020	--	ND	0.120	--		1
1,2-Dichlorobenzene	ND	0.020	--	ND	0.120	--		1
1,2,4-Trichlorobenzene	ND	0.050	--	ND	0.371	--		1
Naphthalene	ND	0.050	--	ND	0.262	--		1
Hexachlorobutadiene	ND	0.050	--	ND	0.533	--		1

Internal Standard	% Recovery	Qualifier	Acceptance Criteria
1,4-difluorobenzene	89		60-140
bromochloromethane	79		60-140
chlorobenzene-d5	92		60-140

Project Name: NBHS IRA O&M
Project Number: 115058

Lab Number: L1405769
Report Date: 03/26/14

Method Blank Analysis
Batch Quality Control

Analytical Method: 101,TO15-SIM
Analytical Date: 03/24/14 18:56

Parameter	ppbV Results	ppbV RL	ppbV MDL	ug/m3 Results	ug/m3 RL	ug/m3 MDL	Qualifier	Dilution Factor
MCP Volatile Organics in Air by SIM - Mansfield Lab for sample(s): 02 Batch: WG677584-4								
Dichlorodifluoromethane	ND	0.050	--	ND	0.247	--		1
Chloromethane	ND	0.500	--	ND	1.03	--		1
Freon-114	ND	0.050	--	ND	0.349	--		1
Vinyl chloride	ND	0.020	--	ND	0.051	--		1
1,3-Butadiene	ND	0.020	--	ND	0.044	--		1
Bromomethane	ND	0.020	--	ND	0.078	--		1
Chloroethane	ND	0.020	--	ND	0.053	--		1
Acetone	ND	1.00	--	ND	2.38	--		1
Trichlorofluoromethane	ND	0.050	--	ND	0.281	--		1
Acrylonitrile	ND	0.500	--	ND	1.09	--		1
1,1-Dichloroethene	ND	0.020	--	ND	0.079	--		1
Methylene chloride	ND	1.40	--	ND	4.86	--		1
Freon-113	ND	0.050	--	ND	0.383	--		1
Halothane	ND	0.050	--	ND	0.404	--		1
trans-1,2-Dichloroethene	ND	0.020	--	ND	0.079	--		1
1,1-Dichloroethane	ND	0.020	--	ND	0.081	--		1
Methyl tert butyl ether	ND	0.020	--	ND	0.072	--		1
2-Butanone	ND	0.200	--	ND	0.590	--		1
cis-1,2-Dichloroethene	ND	0.020	--	ND	0.079	--		1
Chloroform	ND	0.020	--	ND	0.098	--		1
1,2-Dichloroethane	ND	0.020	--	ND	0.081	--		1
1,1,1-Trichloroethane	ND	0.020	--	ND	0.109	--		1
Benzene	ND	0.100	--	ND	0.319	--		1
Carbon tetrachloride	ND	0.020	--	ND	0.126	--		1
1,2-Dichloropropane	ND	0.020	--	ND	0.092	--		1

Project Name: NBHS IRA O&M
Project Number: 115058

Lab Number: L1405769
Report Date: 03/26/14

Method Blank Analysis
Batch Quality Control

Analytical Method: 101,TO15-SIM
Analytical Date: 03/24/14 18:56

Parameter	ppbV Results	ppbV RL	ppbV MDL	ug/m3 Results	ug/m3 RL	ug/m3 MDL	Qualifier	Dilution Factor
MCP Volatile Organics in Air by SIM - Mansfield Lab for sample(s): 02 Batch: WG677584-4								
Bromodichloromethane	ND	0.020	--	ND	0.134	--		1
1,4-Dioxane	ND	0.100	--	ND	0.360	--		1
Trichloroethene	ND	0.020	--	ND	0.107	--		1
cis-1,3-Dichloropropene	ND	0.020	--	ND	0.091	--		1
4-Methyl-2-pentanone	ND	0.200	--	ND	0.820	--		1
trans-1,3-Dichloropropene	ND	0.020	--	ND	0.091	--		1
1,1,2-Trichloroethane	ND	0.020	--	ND	0.109	--		1
Toluene	ND	0.050	--	ND	0.188	--		1
Dibromochloromethane	ND	0.020	--	ND	0.170	--		1
1,2-Dibromoethane	ND	0.020	--	ND	0.154	--		1
Tetrachloroethene	ND	0.020	--	ND	0.136	--		1
1,1,1,2-Tetrachloroethane	ND	0.020	--	ND	0.137	--		1
Chlorobenzene	ND	0.020	--	ND	0.092	--		1
Ethylbenzene	ND	0.020	--	ND	0.087	--		1
p/m-Xylene	ND	0.040	--	ND	0.174	--		1
Bromoform	ND	0.020	--	ND	0.207	--		1
Styrene	ND	0.020	--	ND	0.085	--		1
1,1,2,2-Tetrachloroethane	ND	0.020	--	ND	0.137	--		1
o-Xylene	ND	0.020	--	ND	0.087	--		1
Isopropylbenzene	ND	0.500	--	ND	2.46	--		1
1,3,5-Trimethybenzene	ND	0.020	--	ND	0.098	--		1
1,2,4-Trimethylbenzene	ND	0.020	--	ND	0.098	--		1
1,3-Dichlorobenzene	ND	0.020	--	ND	0.120	--		1
1,4-Dichlorobenzene	ND	0.020	--	ND	0.120	--		1
sec-Butylbenzene	ND	0.500	--	ND	2.74	--		1

Project Name: NBHS IRA O&M
Project Number: 115058
Lab Number: L1405769
Report Date: 03/26/14

Method Blank Analysis
Batch Quality Control

Analytical Method: 101,TO15-SIM
Analytical Date: 03/24/14 18:56

Parameter	ppbV Results	ppbV RL	ppbV MDL	ug/m3 Results	ug/m3 RL	ug/m3 MDL	Qualifier	Dilution Factor
MCP Volatile Organics in Air by SIM - Mansfield Lab for sample(s): 02 Batch: WG677584-4								
p-Isopropyltoluene	ND	0.500	--	ND	2.74	--		1
1,2-Dichlorobenzene	ND	0.020	--	ND	0.120	--		1
n-Butylbenzene	ND	0.500	--	ND	2.74	--		1
1,2,4-Trichlorobenzene	ND	0.050	--	ND	0.371	--		1
Naphthalene	ND	0.050	--	ND	0.262	--		1
1,2,3-Trichlorobenzene	ND	0.050	--	ND	0.371	--		1
Hexachlorobutadiene	ND	0.050	--	ND	0.533	--		1

Project Name: NBHS IRA O&M
Project Number: 115058

Lab Number: L1405769
Report Date: 03/26/14

Method Blank Analysis
Batch Quality Control

Analytical Method: 101,TO-15
Analytical Date: 03/24/14 18:56

Parameter	ppbV Results	ppbV RL	ppbV MDL	ug/m3 Results	ug/m3 RL	ug/m3 MDL	Qualifier	Dilution Factor
MCP Volatile Organics in Air - Mansfield Lab for sample(s): 01 Batch: WG677586-4								
Chlorodifluoromethane	ND	0.200	--	ND	0.707	--		1
Propylene	ND	0.500	--	ND	0.861	--		1
Propane	ND	0.500	--	ND	0.902	--		1
Dichlorodifluoromethane	ND	0.200	--	ND	0.989	--		1
Chloromethane	ND	0.200	--	ND	0.413	--		1
1,2-Dichloro-1,1,2,2-tetrafluoroethane	ND	0.200	--	ND	1.40	--		1
Methanol	ND	5.00	--	ND	6.55	--		1
Vinyl chloride	ND	0.200	--	ND	0.511	--		1
1,3-Butadiene	ND	0.200	--	ND	0.442	--		1
Butane	ND	0.200	--	ND	0.475	--		1
Bromomethane	ND	0.200	--	ND	0.777	--		1
Chloroethane	ND	0.200	--	ND	0.528	--		1
Ethyl Alcohol	ND	2.50	--	ND	4.71	--		1
Dichlorofluoromethane	ND	0.200	--	ND	0.842	--		1
Vinyl bromide	ND	0.200	--	ND	0.874	--		1
Acrolein	ND	0.500	--	ND	1.15	--		1
Acetone	ND	1.00	--	ND	2.38	--		1
Acetonitrile	ND	0.200	--	ND	0.336	--		1
Trichlorofluoromethane	ND	0.200	--	ND	1.12	--		1
iso-Propyl Alcohol	ND	0.500	--	ND	1.23	--		1
Acrylonitrile	ND	0.200	--	ND	0.434	--		1
Pentane	ND	0.200	--	ND	0.590	--		1
Ethyl ether	ND	0.200	--	ND	0.606	--		1
1,1-Dichloroethene	ND	0.200	--	ND	0.793	--		1
tert-Butyl Alcohol	ND	0.500	--	ND	1.52	--		1

Project Name: NBHS IRA O&M
Project Number: 115058

Lab Number: L1405769
Report Date: 03/26/14

Method Blank Analysis
Batch Quality Control

Analytical Method: 101,TO-15
Analytical Date: 03/24/14 18:56

Parameter	ppbV Results	ppbV RL	ppbV MDL	ug/m3 Results	ug/m3 RL	ug/m3 MDL	Qualifier	Dilution Factor
MCP Volatile Organics in Air - Mansfield Lab for sample(s): 01 Batch: WG677586-4								
Methylene chloride	ND	1.40	--	ND	4.86	--		1
3-Chloropropene	ND	0.200	--	ND	0.626	--		1
Carbon disulfide	ND	0.200	--	ND	0.623	--		1
1,1,2-Trichloro-1,2,2-Trifluoroethane	ND	0.200	--	ND	1.53	--		1
trans-1,2-Dichloroethene	ND	0.200	--	ND	0.793	--		1
1,1-Dichloroethane	ND	0.200	--	ND	0.809	--		1
Methyl tert butyl ether	ND	0.200	--	ND	0.721	--		1
Vinyl acetate	ND	0.200	--	ND	0.704	--		1
2-Butanone	ND	0.200	--	ND	0.590	--		1
cis-1,2-Dichloroethene	ND	0.200	--	ND	0.793	--		1
Ethyl Acetate	ND	0.500	--	ND	1.80	--		1
Chloroform	ND	0.200	--	ND	0.977	--		1
Tetrahydrofuran	ND	0.200	--	ND	0.590	--		1
2,2-Dichloropropane	ND	0.200	--	ND	0.924	--		1
1,2-Dichloroethane	ND	0.200	--	ND	0.809	--		1
n-Hexane	ND	0.200	--	ND	0.705	--		1
Isopropyl Ether	ND	0.200	--	ND	0.836	--		1
Ethyl-Tert-Butyl-Ether	ND	0.200	--	ND	0.836	--		1
1,1,1-Trichloroethane	ND	0.200	--	ND	1.09	--		1
1,1-Dichloropropene	ND	0.200	--	ND	0.908	--		1
Benzene	ND	0.200	--	ND	0.639	--		1
Carbon tetrachloride	ND	0.200	--	ND	1.26	--		1
Cyclohexane	ND	0.200	--	ND	0.688	--		1
Tertiary-Amyl Methyl Ether	ND	0.200	--	ND	0.836	--		1
Dibromomethane	ND	0.200	--	ND	1.42	--		1

Project Name: NBHS IRA O&M
Project Number: 115058
Lab Number: L1405769
Report Date: 03/26/14

Method Blank Analysis
Batch Quality Control

Analytical Method: 101,TO-15
Analytical Date: 03/24/14 18:56

Parameter	ppbV Results	ppbV RL	ppbV MDL	ug/m3 Results	ug/m3 RL	ug/m3 MDL	Qualifier	Dilution Factor
MCP Volatile Organics in Air - Mansfield Lab for sample(s): 01 Batch: WG677586-4								
1,2-Dichloropropane	ND	0.200	--	ND	0.924	--		1
Bromodichloromethane	ND	0.200	--	ND	1.34	--		1
1,4-Dioxane	ND	0.200	--	ND	0.721	--		1
Trichloroethene	ND	0.200	--	ND	1.07	--		1
2,2,4-Trimethylpentane	ND	0.200	--	ND	0.934	--		1
Heptane	ND	0.200	--	ND	0.820	--		1
cis-1,3-Dichloropropene	ND	0.200	--	ND	0.908	--		1
4-Methyl-2-pentanone	ND	0.200	--	ND	0.820	--		1
trans-1,3-Dichloropropene	ND	0.200	--	ND	0.908	--		1
1,1,2-Trichloroethane	ND	0.200	--	ND	1.09	--		1
Toluene	ND	0.200	--	ND	0.754	--		1
1,3-Dichloropropane	ND	0.200	--	ND	0.924	--		1
2-Hexanone	ND	0.200	--	ND	0.820	--		1
Dibromochloromethane	ND	0.200	--	ND	1.70	--		1
1,2-Dibromoethane	ND	0.200	--	ND	1.54	--		1
Butyl Acetate	ND	0.500	--	ND	2.38	--		1
Octane	ND	0.200	--	ND	0.934	--		1
Tetrachloroethene	ND	0.200	--	ND	1.36	--		1
1,1,1,2-Tetrachloroethane	ND	0.200	--	ND	1.37	--		1
Chlorobenzene	ND	0.200	--	ND	0.921	--		1
Ethylbenzene	ND	0.200	--	ND	0.869	--		1
p/m-Xylene	ND	0.400	--	ND	1.74	--		1
Bromoform	ND	0.200	--	ND	2.07	--		1
Styrene	ND	0.200	--	ND	0.852	--		1
1,1,2,2-Tetrachloroethane	ND	0.200	--	ND	1.37	--		1

Project Name: NBHS IRA O&M
Project Number: 115058
Lab Number: L1405769
Report Date: 03/26/14

Method Blank Analysis
Batch Quality Control

Analytical Method: 101,TO-15
Analytical Date: 03/24/14 18:56

Parameter	ppbV Results	ppbV RL	ppbV MDL	ug/m3 Results	ug/m3 RL	ug/m3 MDL	Qualifier	Dilution Factor
MCP Volatile Organics in Air - Mansfield Lab for sample(s): 01 Batch: WG677586-4								
o-Xylene	ND	0.200	--	ND	0.869	--		1
1,2,3-Trichloropropane	ND	0.200	--	ND	1.21	--		1
Nonane (C9)	ND	0.200	--	ND	1.05	--		1
Isopropylbenzene	ND	0.200	--	ND	0.983	--		1
Bromobenzene	ND	0.200	--	ND	0.793	--		1
o-Chlorotoluene	ND	0.200	--	ND	1.04	--		1
n-Propylbenzene	ND	0.200	--	ND	0.983	--		1
p-Chlorotoluene	ND	0.200	--	ND	1.04	--		1
4-Ethyltoluene	ND	0.200	--	ND	0.983	--		1
1,3,5-Trimethylbenzene	ND	0.200	--	ND	0.983	--		1
tert-Butylbenzene	ND	0.200	--	ND	1.10	--		1
1,2,4-Trimethylbenzene	ND	0.200	--	ND	0.983	--		1
Decane (C10)	ND	0.200	--	ND	1.16	--		1
Benzyl chloride	ND	0.200	--	ND	1.04	--		1
1,3-Dichlorobenzene	ND	0.200	--	ND	1.20	--		1
1,4-Dichlorobenzene	ND	0.200	--	ND	1.20	--		1
sec-Butylbenzene	ND	0.200	--	ND	1.10	--		1
p-Isopropyltoluene	ND	0.200	--	ND	1.10	--		1
1,2-Dichlorobenzene	ND	0.200	--	ND	1.20	--		1
n-Butylbenzene	ND	0.200	--	ND	1.10	--		1
1,2-Dibromo-3-chloropropane	ND	0.200	--	ND	1.93	--		1
Undecane	ND	0.200	--	ND	1.28	--		1
Dodecane (C12)	ND	0.200	--	ND	1.39	--		1
1,2,4-Trichlorobenzene	ND	0.200	--	ND	1.48	--		1
Naphthalene	ND	0.200	--	ND	1.05	--		1

Project Name: NBHS IRA O&M
Project Number: 115058

Lab Number: L1405769
Report Date: 03/26/14

Method Blank Analysis
Batch Quality Control

Analytical Method: 101,TO-15
Analytical Date: 03/24/14 18:56

Parameter	ppbV Results	ppbV RL	ppbV MDL	ug/m3 Results	ug/m3 RL	ug/m3 MDL	Qualifier	Dilution Factor
MCP Volatile Organics in Air - Mansfield Lab for sample(s): 01 Batch: WG677586-4								
1,2,3-Trichlorobenzene	ND	0.200	--	ND	1.48	--		1
Hexachlorobutadiene	ND	0.200	--	ND	2.13	--		1

Lab Control Sample Analysis
Batch Quality Control

Project Name: NBHS IRA O&M
Project Number: 115058

Lab Number: L1405769
Report Date: 03/26/14

Parameter	LCS %Recovery	Qual	LCSD %Recovery	Qual	%Recovery Limits	RPD	Qual	RPD Limits
MCP Volatile Organics in Air by SIM - Mansfield Lab Associated sample(s): 02 Batch: WG677584-3								
Dichlorodifluoromethane	130		-		70-130	-		
Chloromethane	97		-		70-130	-		
1,2-Dichloro-1,1,2,2-tetrafluoroethane	125		-		70-130	-		
Vinyl chloride	114		-		70-130	-		
1,3-Butadiene	114		-		70-130	-		
Bromomethane	126		-		70-130	-		
Chloroethane	116		-		70-130	-		
Acetone	104		-		50-150	-		
Trichlorofluoromethane	120		-		70-130	-		
1,1-Dichloroethene	110		-		70-130	-		
Methylene chloride	94		-		70-130	-		
1,1,2-Trichloro-1,2,2-Trifluoroethane	115		-		70-130	-		
Halothane	102		-		70-130	-		
trans-1,2-Dichloroethene	102		-		70-130	-		
1,1-Dichloroethane	108		-		70-130	-		
Methyl tert butyl ether	123		-		70-130	-		
2-Butanone	97		-		70-130	-		
cis-1,2-Dichloroethene	123		-		70-130	-		
Chloroform	126		-		70-130	-		
1,2-Dichloroethane	113		-		70-130	-		
1,1,1-Trichloroethane	109		-		70-130	-		

Lab Control Sample Analysis
Batch Quality Control

Project Name: NBHS IRA O&M
Project Number: 115058

Lab Number: L1405769
Report Date: 03/26/14

Parameter	LCS %Recovery	Qual	LCSD %Recovery	Qual	%Recovery Limits	RPD	Qual	RPD Limits
MCP Volatile Organics in Air by SIM - Mansfield Lab Associated sample(s): 02 Batch: WG677584-3								
Benzene	111		-		70-130	-		
Carbon tetrachloride	103		-		70-130	-		
1,2-Dichloropropane	101		-		70-130	-		
Bromodichloromethane	113		-		70-130	-		
1,4-Dioxane	111		-		50-150	-		
Trichloroethene	100		-		70-130	-		
cis-1,3-Dichloropropene	121		-		70-130	-		
4-Methyl-2-pentanone	100		-		70-130	-		
trans-1,3-Dichloropropene	107		-		70-130	-		
1,1,2-Trichloroethane	112		-		70-130	-		
Toluene	113		-		70-130	-		
Dibromochloromethane	99		-		70-130	-		
1,2-Dibromoethane	110		-		70-130	-		
Tetrachloroethene	102		-		70-130	-		
Chlorobenzene	110		-		70-130	-		
Ethylbenzene	114		-		70-130	-		
p/m-Xylene	116		-		70-130	-		
Bromoform	91		-		70-130	-		
Styrene	120		-		70-130	-		
1,1,2,2-Tetrachloroethane	119		-		70-130	-		
o-Xylene	115		-		70-130	-		

Lab Control Sample Analysis
Batch Quality Control

Project Name: NBHS IRA O&M

Project Number: 115058

Lab Number: L1405769

Report Date: 03/26/14

Parameter	LCS %Recovery	Qual	LCSD %Recovery	Qual	%Recovery Limits	RPD	Qual	RPD Limits
MCP Volatile Organics in Air by SIM - Mansfield Lab Associated sample(s): 02 Batch: WG677584-3								
1,3,5-Trimethylbenzene	113		-		70-130	-		
1,2,4-Trimethylbenzene	116		-		70-130	-		
1,3-Dichlorobenzene	110		-		70-130	-		
1,4-Dichlorobenzene	105		-		70-130	-		
1,2-Dichlorobenzene	106		-		70-130	-		
1,2,4-Trichlorobenzene	122		-		50-150	-		
Naphthalene	116		-		50-150	-		
1,2,3-Trichlorobenzene	117		-		70-130	-		
Hexachlorobutadiene	120		-		50-150	-		

Lab Control Sample Analysis
Batch Quality Control

Project Name: NBHS IRA O&M
Project Number: 115058

Lab Number: L1405769
Report Date: 03/26/14

Parameter	LCS %Recovery	Qual	LCSD %Recovery	Qual	%Recovery Limits	RPD	Qual	RPD Limits
MCP Volatile Organics in Air - Mansfield Lab Associated sample(s): 01 Batch: WG677586-3								
Chlorodifluoromethane	95		-		70-130	-		
Propylene	106		-		70-130	-		
Dichlorodifluoromethane	113		-		70-130	-		
Chloromethane	100		-		70-130	-		
1,2-Dichloro-1,1,2,2-tetrafluoroethane	128		-		70-130	-		
Methanol	89		-		70-130	-		
Vinyl chloride	123		-		70-130	-		
1,3-Butadiene	111		-		70-130	-		
Bromomethane	126		-		70-130	-		
Chloroethane	121		-		70-130	-		
Ethyl Alcohol	96		-		70-130	-		
Dichlorofluoromethane	121		-		70-130	-		
Vinyl bromide	125		-		70-130	-		
Acrolein	98		-		70-130	-		
Acetone	108		-		50-150	-		
Acetonitrile	99		-		70-130	-		
Trichlorofluoromethane	122		-		70-130	-		
iso-Propyl Alcohol	110		-		70-130	-		
Acrylonitrile	95		-		70-130	-		
Pentane	91		-		70-130	-		
Ethyl ether	88		-		70-130	-		

Lab Control Sample Analysis
Batch Quality Control

Project Name: NBHS IRA O&M
Project Number: 115058

Lab Number: L1405769
Report Date: 03/26/14

Parameter	LCS %Recovery	Qual	LCSD %Recovery	Qual	%Recovery Limits	RPD	Qual	RPD Limits
MCP Volatile Organics in Air - Mansfield Lab Associated sample(s): 01 Batch: WG677586-3								
1,1-Dichloroethene	112		-		70-130	-		
tert-Butyl Alcohol	108		-		70-130	-		
Methylene chloride	96		-		70-130	-		
3-Chloropropene	102		-		70-130	-		
Carbon disulfide	122		-		70-130	-		
1,1,2-Trichloro-1,2,2-Trifluoroethane	116		-		70-130	-		
trans-1,2-Dichloroethene	107		-		70-130	-		
1,1-Dichloroethane	116		-		70-130	-		
Methyl tert butyl ether	126		-		70-130	-		
Vinyl acetate	**133**	Q	-		70-130	-		
2-Butanone	103		-		70-130	-		
cis-1,2-Dichloroethene	128		-		70-130	-		
Ethyl Acetate	124		-		70-130	-		
Chloroform	127		-		70-130	-		
Tetrahydrofuran	96		-		70-130	-		
2,2-Dichloropropane	117		-		70-130	-		
1,2-Dichloroethane	119		-		70-130	-		
n-Hexane	92		-		70-130	-		
Isopropyl Ether	102		-		70-130	-		
Ethyl-Tert-Butyl-Ether	88		-		70-130	-		
1,1,1-Trichloroethane	104		-		70-130	-		

Lab Control Sample Analysis
Batch Quality Control

Project Name: NBHS IRA O&M
Project Number: 115058

Lab Number: L1405769
Report Date: 03/26/14

Parameter	LCS %Recovery	Qual	LCSD %Recovery	Qual	%Recovery Limits	RPD	Qual	RPD Limits
MCP Volatile Organics in Air - Mansfield Lab Associated sample(s): 01 Batch: WG677586-3								
1,1-Dichloropropene	109		-		70-130	-		
Benzene	110		-		70-130	-		
Carbon tetrachloride	100		-		70-130	-		
Cyclohexane	90		-		70-130	-		
Tertiary-Amyl Methyl Ether	101		-		70-130	-		
Dibromomethane	102		-		70-130	-		
1,2-Dichloropropane	100		-		70-130	-		
Bromodichloromethane	109		-		70-130	-		
1,4-Dioxane	109		-		50-150	-		
Trichloroethene	100		-		70-130	-		
2,2,4-Trimethylpentane	94		-		70-130	-		
Heptane	85		-		70-130	-		
cis-1,3-Dichloropropene	117		-		70-130	-		
4-Methyl-2-pentanone	89		-		70-130	-		
trans-1,3-Dichloropropene	101		-		70-130	-		
1,1,2-Trichloroethane	107		-		70-130	-		
Toluene	115		-		70-130	-		
1,3-Dichloropropane	117		-		70-130	-		
2-Hexanone	103		-		70-130	-		
Dibromochloromethane	100		-		70-130	-		
1,2-Dibromoethane	110		-		70-130	-		

Lab Control Sample Analysis
Batch Quality Control

Project Name: NBHS IRA O&M
Project Number: 115058

Lab Number: L1405769
Report Date: 03/26/14

Parameter	LCS %Recovery	Qual	LCSD %Recovery	Qual	%Recovery Limits	RPD	Qual	RPD Limits
MCP Volatile Organics in Air - Mansfield Lab Associated sample(s): 01 Batch: WG677586-3								
Octane	110		-		70-130	-		
Tetrachloroethene	105		-		70-130	-		
1,1,1,2-Tetrachloroethane	99		-		70-130	-		
Chlorobenzene	112		-		70-130	-		
Ethylbenzene	115		-		70-130	-		
p/m-Xylene	117		-		70-130	-		
Bromoform	94		-		70-130	-		
Styrene	114		-		70-130	-		
1,1,2,2-Tetrachloroethane	124		-		70-130	-		
o-Xylene	118		-		70-130	-		
1,2,3-Trichloropropane	115		-		70-130	-		
Nonane (C9)	90		-		70-130	-		
Isopropylbenzene	111		-		70-130	-		
Bromobenzene	116		-		70-130	-		
o-Chlorotoluene	104		-		70-130	-		
n-Propylbenzene	108		-		70-130	-		
p-Chlorotoluene	114		-		70-130	-		
4-Ethyltoluene	104		-		70-130	-		
1,3,5-Trimethylbenzene	114		-		70-130	-		
tert-Butylbenzene	107		-		70-130	-		
1,2,4-Trimethylbenzene	117		-		70-130	-		

Lab Control Sample Analysis
Batch Quality Control

Project Name: NBHS IRA O&M
Project Number: 115058

Lab Number: L1405769
Report Date: 03/26/14

Parameter	LCS %Recovery	Qual	LCSD %Recovery	Qual	%Recovery Limits	RPD	Qual	RPD Limits
MCP Volatile Organics in Air - Mansfield Lab Associated sample(s): 01 Batch: WG677586-3								
Decane (C10)	100		-		70-130	-		
Benzyl chloride	99		-		70-130	-		
1,3-Dichlorobenzene	110		-		70-130	-		
1,4-Dichlorobenzene	109		-		70-130	-		
sec-Butylbenzene	110		-		70-130	-		
p-Isopropyltoluene	101		-		70-130	-		
1,2-Dichlorobenzene	109		-		70-130	-		
n-Butylbenzene	118		-		70-130	-		
1,2-Dibromo-3-chloropropane	119		-		70-130	-		
Undecane	105		-		70-130	-		
Dodecane (C12)	119		-		70-130	-		
1,2,4-Trichlorobenzene	123		-		50-150	-		
Naphthalene	115		-		50-150	-		
1,2,3-Trichlorobenzene	117		-		70-130	-		
Hexachlorobutadiene	126		-		50-150	-		

Lab Duplicate Analysis
Batch Quality Control

Project Name: NBHS IRA O&M
Project Number: 115058

Lab Number: L1405769
Report Date: 03/26/14

Parameter	Native Sample	Duplicate Sample	Units	RPD	Qual	RPD Limits
MCP Volatile Organics in Air by SIM - Mansfield Lab Associated sample(s): 02 QC Batch ID: WG677584-5 QC Sample: L1405726-01 Client ID: DUP Sample						
Vinyl chloride	ND	ND	ppbV	NC		25
Bromomethane	ND	ND	ppbV	NC		25
Acetone	10.8	11.0	ppbV	2		25
1,1-Dichloroethene	ND	ND	ppbV	NC		25
Methylene chloride	ND	ND	ppbV	NC		25
trans-1,2-Dichloroethene	ND	ND	ppbV	NC		25
1,1-Dichloroethane	ND	ND	ppbV	NC		25
Methyl tert butyl ether	ND	ND	ppbV	NC		25
2-Butanone	0.307	0.311	ppbV	1		25
cis-1,2-Dichloroethene	ND	ND	ppbV	NC		25
Chloroform	0.076	0.078	ppbV	3		25
1,2-Dichloroethane	0.022	0.021	ppbV	5		25
1,1,1-Trichloroethane	ND	ND	ppbV	NC		25
Benzene	0.262	0.253	ppbV	3		25
Carbon tetrachloride	0.073	0.069	ppbV	6		25
1,2-Dichloropropane	ND	ND	ppbV	NC		25
Bromodichloromethane	ND	ND	ppbV	NC		25
1,4-Dioxane	ND	ND	ppbV	NC		25
Trichloroethene	0.030	0.028	ppbV	7		25

Lab Duplicate Analysis
Batch Quality Control

Project Name: NBHS IRA O&M
Project Number: 115058

Lab Number: L1405769
Report Date: 03/26/14

Parameter	Native Sample	Duplicate Sample	Units	RPD	RPD Limits
MCP Volatile Organics in Air by SIM - Mansfield Lab Associated sample(s): 02 QC Batch ID: WG677584-5 QC Sample: L1405726-01 Client ID: DUP Sample					
cis-1,3-Dichloropropene	ND	ND	ppbV	NC	25
4-Methyl-2-pentanone	ND	ND	ppbV	NC	25
trans-1,3-Dichloropropene	ND	ND	ppbV	NC	25
1,1,2-Trichloroethane	ND	ND	ppbV	NC	25
Toluene	0.370	0.374	ppbV	1	25
Dibromochloromethane	ND	ND	ppbV	NC	25
1,2-Dibromoethane	ND	ND	ppbV	NC	25
Tetrachloroethene	0.026	0.026	ppbV	0	25
Chlorobenzene	ND	ND	ppbV	NC	25
Ethylbenzene	0.043	0.042	ppbV	2	25
p/m-Xylene	0.118	0.121	ppbV	3	25
Bromoform	ND	ND	ppbV	NC	25
Styrene	0.020	0.020	ppbV	0	25
1,1,2,2-Tetrachloroethane	ND	ND	ppbV	NC	25
o-Xylene	0.043	0.044	ppbV	2	25
1,3-Dichlorobenzene	ND	ND	ppbV	NC	25
1,4-Dichlorobenzene	ND	ND	ppbV	NC	25
1,2-Dichlorobenzene	ND	ND	ppbV	NC	25
1,2,4-Trichlorobenzene	ND	ND	ppbV	NC	25

Lab Duplicate Analysis
Batch Quality Control

Project Name: NBHS IRA O&M
Project Number: 115058

Lab Number: L1405769
Report Date: 03/26/14

Parameter	Native Sample	Duplicate Sample	Units	RPD	RPD Limits
MCP Volatile Organics in Air by SIM - Mansfield Lab Associated sample(s): 02 QC Batch ID: WG677584-5 QC Sample: L1405726-01 Client ID: DUP Sample					
Naphthalene	0.077	ND	ppbV	NC	25
Hexachlorobutadiene	ND	ND	ppbV	NC	25

Project Name: NBHS IRA O&M

Lab Number: L1405769

Project Number: 115058

Report Date: 03/26/14

Canister and Flow Controller Information

Samplenum	Client ID	Media ID	Media Type	Date Prepared	Bottle Order	Cleaning Batch ID	Can Leak Check	Initial Pressure (in. Hg)	Pressure on Receipt (in. Hg)	Flow Controler Leak Chk	Flow Out mL/min	Flow In mL/min	% RPD
L1405769-01	VAPOR INLET	0501	#90 SV	03/17/14	99980		-	-	-	Pass	200	209	4
L1405769-01	VAPOR INLET	497	2.7L Can	03/17/14	99980	L1405340-01	Pass	-28.5	-1.8	-	-	-	-
L1405769-02	VAPOR OUTLET	0015	#90 SV	03/17/14	99980		-	-	-	Pass	200	208	4
L1405769-02	VAPOR OUTLET	507	2.7L Can	03/17/14	99980	L1405340-01	Pass	-28.6	-2.3	-	-	-	-

Project Name: BATCH CANISTER CERTIFICATION **Lab Number:** L1405340

Project Number: CANISTER QC BAT **Report Date:** 03/26/14

Air Canister Certification Results

Lab ID:	L1405340-01	Date Collected:	03/13/14 19:14
Client ID:	CAN 150 SHELF 3	Date Received:	03/14/14
Sample Location:		Field Prep:	Not Specified
Matrix:	Air		
Anaytical Method:	48,TO-15		
Analytical Date:	03/14/14 15:51		
Analyst:	RY		

	ppbV			ug/m3				
Parameter	**Results**	**RL**	**MDL**	**Results**	**RL**	**MDL**	**Qualifier**	**Dilution Factor**
Volatile Organics in Air - Mansfield Lab								
Chlorodifluoromethane	ND	0.200	--	ND	0.707	--		1
Propylene	ND	0.500	--	ND	0.861	--		1
Propane	ND	0.500	--	ND	0.902	--		1
Dichlorodifluoromethane	ND	0.200	--	ND	0.989	--		1
Chloromethane	ND	0.200	--	ND	0.413	--		1
Freon-114	ND	0.200	--	ND	1.40	--		1
Methanol	ND	5.00	--	ND	6.55	--		1
Vinyl chloride	ND	0.200	--	ND	0.511	--		1
1,3-Butadiene	ND	0.200	--	ND	0.442	--		1
Butane	ND	0.200	--	ND	0.475	--		1
Bromomethane	ND	0.200	--	ND	0.777	--		1
Chloroethane	ND	0.200	--	ND	0.528	--		1
Ethanol	ND	2.50	--	ND	4.71	--		1
Dichlorofluoromethane	ND	0.200	--	ND	0.842	--		1
Vinyl bromide	ND	0.200	--	ND	0.874	--		1
Acrolein	ND	0.500	--	ND	1.15	--		1
Acetone	ND	1.00	--	ND	2.38	--		1
Acetonitrile	ND	0.200	--	ND	0.336	--		1
Trichlorofluoromethane	ND	0.200	--	ND	1.12	--		1
Isopropanol	ND	0.500	--	ND	1.23	--		1
Acrylonitrile	ND	0.200	--	ND	0.434	--		1
Pentane	ND	0.200	--	ND	0.590	--		1
Ethyl ether	ND	0.200	--	ND	0.606	--		1
1,1-Dichloroethene	ND	0.200	--	ND	0.793	--		1
Tertiary butyl Alcohol	ND	0.500	--	ND	1.52	--		1

Project Name: BATCH CANISTER CERTIFICATION **Lab Number:** L1405340

Project Number: CANISTER QC BAT **Report Date:** 03/26/14

Air Canister Certification Results

Lab ID: L1405340-01 Date Collected: 03/13/14 19:14

Client ID: CAN 150 SHELF 3 Date Received: 03/14/14

Sample Location: Field Prep: Not Specified

	ppbV			ug/m3				
Parameter	**Results**	**RL**	**MDL**	**Results**	**RL**	**MDL**	**Qualifier**	**Dilution Factor**
Volatile Organics in Air - Mansfield Lab								
Methylene chloride	ND	1.00	--	ND	3.47	--		1
3-Chloropropene	ND	0.200	--	ND	0.626	--		1
Carbon disulfide	ND	0.200	--	ND	0.623	--		1
Freon-113	ND	0.200	--	ND	1.53	--		1
trans-1,2-Dichloroethene	ND	0.200	--	ND	0.793	--		1
1,1-Dichloroethane	ND	0.200	--	ND	0.809	--		1
Methyl tert butyl ether	ND	0.200	--	ND	0.721	--		1
Vinyl acetate	ND	0.200	--	ND	0.704	--		1
2-Butanone	ND	0.200	--	ND	0.590	--		1
cis-1,2-Dichloroethene	ND	0.200	--	ND	0.793	--		1
Ethyl Acetate	ND	0.500	--	ND	1.80	--		1
Chloroform	ND	0.200	--	ND	0.977	--		1
Tetrahydrofuran	ND	0.200	--	ND	0.590	--		1
2,2-Dichloropropane	ND	0.200	--	ND	0.924	--		1
1,2-Dichloroethane	ND	0.200	--	ND	0.809	--		1
n-Hexane	ND	0.200	--	ND	0.705	--		1
Diisopropyl ether	ND	0.200	--	ND	0.836	--		1
tert-Butyl Ethyl Ether	ND	0.200	--	ND	0.836	--		1
1,1,1-Trichloroethane	ND	0.200	--	ND	1.09	--		1
1,1-Dichloropropene	ND	0.200	--	ND	0.908	--		1
Benzene	ND	0.200	--	ND	0.639	--		1
Carbon tetrachloride	ND	0.200	--	ND	1.26	--		1
Cyclohexane	ND	0.200	--	ND	0.688	--		1
tert-Amyl Methyl Ether	ND	0.200	--	ND	0.836	--		1
Dibromomethane	ND	0.200	--	ND	1.42	--		1
1,2-Dichloropropane	ND	0.200	--	ND	0.924	--		1
Bromodichloromethane	ND	0.200	--	ND	1.34	--		1
1,4-Dioxane	ND	0.200	--	ND	0.721	--		1

Project Name: BATCH CANISTER CERTIFICATION **Lab Number:** L1405340

Project Number: CANISTER QC BAT **Report Date:** 03/26/14

Air Canister Certification Results

Lab ID: L1405340-01 Date Collected: 03/13/14 19:14

Client ID: CAN 150 SHELF 3 Date Received: 03/14/14

Sample Location: Field Prep: Not Specified

	ppbV			ug/m3				
Parameter	**Results**	**RL**	**MDL**	**Results**	**RL**	**MDL**	**Qualifier**	**Dilution Factor**
Volatile Organics in Air - Mansfield Lab								
Trichloroethene	ND	0.200	--	ND	1.07	--		1
2,2,4-Trimethylpentane	ND	0.200	--	ND	0.934	--		1
Methyl Methacrylate	ND	0.500	--	ND	2.05	--		1
Heptane	ND	0.200	--	ND	0.820	--		1
cis-1,3-Dichloropropene	ND	0.200	--	ND	0.908	--		1
4-Methyl-2-pentanone	ND	0.200	--	ND	0.820	--		1
trans-1,3-Dichloropropene	ND	0.200	--	ND	0.908	--		1
1,1,2-Trichloroethane	ND	0.200	--	ND	1.09	--		1
Toluene	ND	0.200	--	ND	0.754	--		1
1,3-Dichloropropane	ND	0.200	--	ND	0.924	--		1
2-Hexanone	ND	0.200	--	ND	0.820	--		1
Dibromochloromethane	ND	0.200	--	ND	1.70	--		1
1,2-Dibromoethane	ND	0.200	--	ND	1.54	--		1
Butyl acetate	ND	0.500	--	ND	2.38	--		1
Octane	ND	0.200	--	ND	0.934	--		1
Tetrachloroethene	ND	0.200	--	ND	1.36	--		1
1,1,1,2-Tetrachloroethane	ND	0.200	--	ND	1.37	--		1
Chlorobenzene	ND	0.200	--	ND	0.921	--		1
Ethylbenzene	ND	0.200	--	ND	0.869	--		1
p/m-Xylene	ND	0.400	--	ND	1.74	--		1
Bromoform	ND	0.200	--	ND	2.07	--		1
Styrene	ND	0.200	--	ND	0.852	--		1
1,1,2,2-Tetrachloroethane	ND	0.200	--	ND	1.37	--		1
o-Xylene	ND	0.200	--	ND	0.869	--		1
1,2,3-Trichloropropane	ND	0.200	--	ND	1.21	--		1
Nonane	ND	0.200	--	ND	1.05	--		1
Isopropylbenzene	ND	0.200	--	ND	0.983	--		1
Bromobenzene	ND	0.200	--	ND	0.793	--		1

Project Name: BATCH CANISTER CERTIFICATION **Lab Number:** L1405340

Project Number: CANISTER QC BAT **Report Date:** 03/26/14

Air Canister Certification Results

Lab ID: L1405340-01 Date Collected: 03/13/14 19:14

Client ID: CAN 150 SHELF 3 Date Received: 03/14/14

Sample Location: Field Prep: Not Specified

Parameter	ppbV Results	ppbV RL	ppbV MDL	ug/m3 Results	ug/m3 RL	ug/m3 MDL	Qualifier	Dilution Factor
Volatile Organics in Air - Mansfield Lab								
2-Chlorotoluene	ND	0.200	--	ND	1.04	--		1
n-Propylbenzene	ND	0.200	--	ND	0.983	--		1
4-Chlorotoluene	ND	0.200	--	ND	1.04	--		1
4-Ethyltoluene	ND	0.200	--	ND	0.983	--		1
1,3,5-Trimethylbenzene	ND	0.200	--	ND	0.983	--		1
tert-Butylbenzene	ND	0.200	--	ND	1.10	--		1
1,2,4-Trimethylbenzene	ND	0.200	--	ND	0.983	--		1
Decane	ND	0.200	--	ND	1.16	--		1
Benzyl chloride	ND	0.200	--	ND	1.04	--		1
1,3-Dichlorobenzene	ND	0.200	--	ND	1.20	--		1
1,4-Dichlorobenzene	ND	0.200	--	ND	1.20	--		1
sec-Butylbenzene	ND	0.200	--	ND	1.10	--		1
p-Isopropyltoluene	ND	0.200	--	ND	1.10	--		1
1,2-Dichlorobenzene	ND	0.200	--	ND	1.20	--		1
n-Butylbenzene	ND	0.200	--	ND	1.10	--		1
1,2-Dibromo-3-chloropropane	ND	0.200	--	ND	1.93	--		1
Undecane	ND	0.200	--	ND	1.28	--		1
Dodecane	ND	0.200	--	ND	1.39	--		1
1,2,4-Trichlorobenzene	ND	0.200	--	ND	1.48	--		1
Naphthalene	ND	0.200	--	ND	1.05	--		1
1,2,3-Trichlorobenzene	ND	0.200	--	ND	1.48	--		1
Hexachlorobutadiene	ND	0.200	--	ND	2.13	--		1

	Results	Qualifier	Units	RDL	Dilution Factor
Tentatively Identified Compounds					
No Tentatively Identified Compounds					

Project Name: BATCH CANISTER CERTIFICATION **Lab Number:** L1405340

Project Number: CANISTER QC BAT **Report Date:** 03/26/14

Air Canister Certification Results

Lab ID: L1405340-01 Date Collected: 03/13/14 19:14

Client ID: CAN 150 SHELF 3 Date Received: 03/14/14

Sample Location: Field Prep: Not Specified

Parameter	ppbV Results	ppbV RL	ppbV MDL	ug/m3 Results	ug/m3 RL	ug/m3 MDL	Qualifier	Dilution Factor
Volatile Organics in Air - Mansfield Lab								

Internal Standard	% Recovery	Qualifier	Acceptance Criteria
1,4-Difluorobenzene	93		60-140
Bromochloromethane	93		60-140
chlorobenzene-d5	91		60-140

Project Name: BATCH CANISTER CERTIFICATION **Lab Number:** L1405340

Project Number: CANISTER QC BAT **Report Date:** 03/26/14

Air Canister Certification Results

Lab ID:	L1405340-01	Date Collected:	03/13/14 19:14
Client ID:	CAN 150 SHELF 3	Date Received:	03/14/14
Sample Location:		Field Prep:	Not Specified
Matrix:	Air		
Anaytical Method:	48,TO-15-SIM		
Analytical Date:	03/14/14 15:51		
Analyst:	RY		

	ppbV			ug/m3				
Parameter	**Results**	**RL**	**MDL**	**Results**	**RL**	**MDL**	**Qualifier**	**Dilution Factor**
Volatile Organics in Air by SIM - Mansfield Lab								
Dichlorodifluoromethane	ND	0.050	--	ND	0.247	--		1
Chloromethane	ND	0.500	--	ND	1.03	--		1
Freon-114	ND	0.050	--	ND	0.349	--		1
Vinyl chloride	ND	0.020	--	ND	0.051	--		1
1,3-Butadiene	ND	0.020	--	ND	0.044	--		1
Bromomethane	ND	0.020	--	ND	0.078	--		1
Chloroethane	ND	0.020	--	ND	0.053	--		1
Acetone	ND	2.00	--	ND	4.75	--		1
Trichlorofluoromethane	ND	0.050	--	ND	0.281	--		1
Acrylonitrile	ND	0.500	--	ND	1.09	--		1
1,1-Dichloroethene	ND	0.020	--	ND	0.079	--		1
Methylene chloride	ND	1.00	--	ND	3.47	--		1
Freon-113	ND	0.050	--	ND	0.383	--		1
Halothane	ND	0.050	--	ND	0.404	--		1
trans-1,2-Dichloroethene	ND	0.020	--	ND	0.079	--		1
1,1-Dichloroethane	ND	0.020	--	ND	0.081	--		1
Methyl tert butyl ether	ND	0.020	--	ND	0.072	--		1
2-Butanone	ND	0.500	--	ND	1.47	--		1
cis-1,2-Dichloroethene	ND	0.020	--	ND	0.079	--		1
Chloroform	ND	0.020	--	ND	0.098	--		1
1,2-Dichloroethane	ND	0.020	--	ND	0.081	--		1
1,1,1-Trichloroethane	ND	0.020	--	ND	0.109	--		1
Benzene	ND	0.100	--	ND	0.319	--		1
Carbon tetrachloride	ND	0.020	--	ND	0.126	--		1
1,2-Dichloropropane	ND	0.020	--	ND	0.092	--		1

Project Name: BATCH CANISTER CERTIFICATION **Lab Number:** L1405340

Project Number: CANISTER QC BAT **Report Date:** 03/26/14

Air Canister Certification Results

Lab ID: L1405340-01 Date Collected: 03/13/14 19:14

Client ID: CAN 150 SHELF 3 Date Received: 03/14/14

Sample Location: Field Prep: Not Specified

	ppbV			ug/m3				
Parameter	**Results**	**RL**	**MDL**	**Results**	**RL**	**MDL**	**Qualifier**	**Dilution Factor**
Volatile Organics in Air by SIM - Mansfield Lab								
Bromodichloromethane	ND	0.020	--	ND	0.134	--		1
1,4-Dioxane	ND	0.100	--	ND	0.360	--		1
Trichloroethene	ND	0.020	--	ND	0.107	--		1
cis-1,3-Dichloropropene	ND	0.020	--	ND	0.091	--		1
4-Methyl-2-pentanone	ND	0.500	--	ND	2.05	--		1
trans-1,3-Dichloropropene	ND	0.020	--	ND	0.091	--		1
1,1,2-Trichloroethane	ND	0.020	--	ND	0.109	--		1
Toluene	ND	0.050	--	ND	0.188	--		1
Dibromochloromethane	ND	0.020	--	ND	0.170	--		1
1,2-Dibromoethane	ND	0.020	--	ND	0.154	--		1
Tetrachloroethene	ND	0.020	--	ND	0.136	--		1
1,1,1,2-Tetrachloroethane	ND	0.020	--	ND	0.137	--		1
Chlorobenzene	ND	0.020	--	ND	0.092	--		1
Ethylbenzene	ND	0.020	--	ND	0.087	--		1
p/m-Xylene	ND	0.040	--	ND	0.174	--		1
Bromoform	ND	0.020	--	ND	0.207	--		1
Styrene	ND	0.020	--	ND	0.085	--		1
1,1,2,2-Tetrachloroethane	ND	0.020	--	ND	0.137	--		1
o-Xylene	ND	0.020	--	ND	0.087	--		1
Isopropylbenzene	ND	0.500	--	ND	2.46	--		1
4-Ethyltoluene	ND	0.020	--	ND	0.098	--		1
1,3,5-Trimethybenzene	ND	0.020	--	ND	0.098	--		1
1,2,4-Trimethylbenzene	ND	0.020	--	ND	0.098	--		1
1,3-Dichlorobenzene	ND	0.020	--	ND	0.120	--		1
1,4-Dichlorobenzene	ND	0.020	--	ND	0.120	--		1
sec-Butylbenzene	ND	0.500	--	ND	2.74	--		1
p-Isopropyltoluene	ND	0.500	--	ND	2.74	--		1
1,2-Dichlorobenzene	ND	0.020	--	ND	0.120	--		1

Project Name: BATCH CANISTER CERTIFICATION **Lab Number:** L1405340

Project Number: CANISTER QC BAT **Report Date:** 03/26/14

Air Canister Certification Results

Lab ID: L1405340-01 Date Collected: 03/13/14 19:14

Client ID: CAN 150 SHELF 3 Date Received: 03/14/14

Sample Location: Field Prep: Not Specified

Parameter	ppbV Results	ppbV RL	ppbV MDL	ug/m3 Results	ug/m3 RL	ug/m3 MDL	Qualifier	Dilution Factor
Volatile Organics in Air by SIM - Mansfield Lab								
n-Butylbenzene	ND	0.500	--	ND	2.74	--		1
1,2,4-Trichlorobenzene	ND	0.050	--	ND	0.371	--		1
Naphthalene	ND	0.050	--	ND	0.262	--		1
1,2,3-Trichlorobenzene	ND	0.050	--	ND	0.371	--		1
Hexachlorobutadiene	ND	0.050	--	ND	0.533	--		1

Internal Standard	% Recovery	Qualifier	Acceptance Criteria
1,4-difluorobenzene	97		60-140
bromochloromethane	95		60-140
chlorobenzene-d5	95		60-140

Project Name: NBHS IRA O&M
Project Number: 115058

Lab Number: L1405769
Report Date: 03/26/14

Sample Receipt and Container Information

Were project specific reporting limits specified? YES

Reagent H2O Preserved Vials Frozen on: NA

Cooler Information **Custody Seal**

Cooler	
NA	Absent

Container Information

Container ID	Container Type	Cooler	pH	Temp deg C	Pres	Seal	Analysis(*)
L1405769-01A	Canister - 2.7 Liter	NA	N/A		Y	Absent	MCP-TO15(30)
L1405769-02A	Canister - 2.7 Liter	NA	N/A		Y	Absent	MCP-TO15-SIM(30)

*Values in parentheses indicate holding time in days

Project Name:	NBHS IRA O&M	**Lab Number:**	L1405769
Project Number:	115058	**Report Date:**	03/26/14

GLOSSARY

Acronyms

EDL	- Estimated Detection Limit: This value represents the level to which target analyte concentrations are reported as estimated values, when those target analyte concentrations are quantified below the reporting limit (RL). The EDL includes any adjustments from dilutions, concentrations or moisture content, where applicable. The use of EDLs is specific to the analysis of PAHs using Solid-Phase Microextraction (SPME).
EPA	- Environmental Protection Agency.
LCS	- Laboratory Control Sample: A sample matrix, free from the analytes of interest, spiked with verified known amounts of analytes or a material containing known and verified amounts of analytes.
LCSD	- Laboratory Control Sample Duplicate: Refer to LCS.
LFB	- Laboratory Fortified Blank: A sample matrix, free from the analytes of interest, spiked with verified known amounts of analytes or a material containing known and verified amounts of analytes.
MDL	- Method Detection Limit: This value represents the level to which target analyte concentrations are reported as estimated values, when those target analyte concentrations are quantified below the reporting limit (RL). The MDL includes any adjustments from dilutions, concentrations or moisture content, where applicable.
MS	- Matrix Spike Sample: A sample prepared by adding a known mass of target analyte to a specified amount of matrix sample for which an independent estimate of target analyte concentration is available.
MSD	- Matrix Spike Sample Duplicate: Refer to MS.
NA	- Not Applicable.
NC	- Not Calculated: Term is utilized when one or more of the results utilized in the calculation are non-detect at the parameter's reporting unit.
NI	- Not Ignitable.
RL	- Reporting Limit: The value at which an instrument can accurately measure an analyte at a specific concentration. The RL includes any adjustments from dilutions, concentrations or moisture content, where applicable.
RPD	- Relative Percent Difference: The results from matrix and/or matrix spike duplicates are primarily designed to assess the precision of analytical results in a given matrix and are expressed as relative percent difference (RPD). Values which are less than five times the reporting limit for any individual parameter are evaluated by utilizing the absolute difference between the values; although the RPD value will be provided in the report.
SRM	- Standard Reference Material: A reference sample of a known or certified value that is of the same or similar matrix as the associated field samples.

Footnotes

1	- The reference for this analyte should be considered modified since this analyte is absent from the target analyte list of the original method.

Terms

Analytical Method: Both the document from which the method originates and the analytical reference method. (Example: EPA 8260B is shown as 1,8260B.) The codes for the reference method documents are provided in the References section of the Addendum.

Data Qualifiers

A	- Spectra identified as "Aldol Condensation Product".
B	- The analyte was detected above the reporting limit in the associated method blank. Flag only applies to associated field samples that have detectable concentrations of the analyte at less than ten times (10x) the concentration found in the blank. For MCP-related projects, flag only applies to associated field samples that have detectable concentrations of the analyte at less than ten times (10x) the concentration found in the blank. For DOD-related projects, flag only applies to associated field samples that have detectable concentrations of the analyte at less than ten times (10x) the concentration found in the blank AND the analyte was detected above one-half the reporting limit (or above the reporting limit for common lab contaminants) in the associated method blank. For NJ-Air-related projects, flag only applies to associated field samples that have detectable concentrations of the analyte above the reporting limit.
C	- Co-elution: The target analyte co-elutes with a known lab standard (i.e. surrogate, internal standards, etc.) for co-extracted analyses.
D	- Concentration of analyte was quantified from diluted analysis. Flag only applies to field samples that have detectable concentrations of the analyte.
E	- Concentration of analyte exceeds the range of the calibration curve and/or linear range of the instrument.
G	- The concentration may be biased high due to matrix interferences (i.e, co-elution) with non-target compound(s). The result should be considered estimated.
H	- The analysis of pH was performed beyond the regulatory-required holding time of 15 minutes from the time of sample collection.
I	- The lower value for the two columns has been reported due to obvious interference.

Report Format: Data Usability Report

Project Name:	NBHS IRA O&M	**Lab Number:**	L1405769
Project Number:	115058	**Report Date:**	03/26/14

Data Qualifiers

M - Reporting Limit (RL) exceeds the MCP CAM Reporting Limit for this analyte.

NJ - Presumptive evidence of compound. This represents an estimated concentration for Tentatively Identified Compounds (TICs), where the identification is based on a mass spectral library search.

P - The RPD between the results for the two columns exceeds the method-specified criteria.

Q - The quality control sample exceeds the associated acceptance criteria. For DOD-related projects, LCS and/or Continuing Calibration Standard exceedences are also qualified on all associated sample results. Note: This flag is not applicable for matrix spike recoveries when the sample concentration is greater than 4x the spike added or for batch duplicate RPD when the sample concentrations are less than 5x the RL. (Metals only.)

R - Analytical results are from sample re-analysis.

RE - Analytical results are from sample re-extraction.

S - Analytical results are from modified screening analysis.

J - Estimated value. This represents an estimated concentration for Tentatively Identified Compounds (TICs).

ND - Not detected at the reporting limit (RL) for the sample.

Report Format: Data Usability Report

Project Name: NBHS IRA O&M **Lab Number:** L1405769
Project Number: 115058 **Report Date:** 03/26/14

REFERENCES

101 Compendium of Methods for the Determination of Toxic Organic Compounds in Ambient Air (EPA/625/R-96/010b:January 1999) with QC Requirements & Performance Standards for the Analysis of TO-15 under the Massachusetts Contingency Plan, WSC-CAM-IXB, July 2010.

LIMITATION OF LIABILITIES

Alpha Analytical performs services with reasonable care and diligence normal to the analytical testing laboratory industry. In the event of an error, the sole and exclusive responsibility of Alpha Analytical shall be to re-perform the work at it's own expense. In no event shall Alpha Analytical be held liable for any incidental, consequential or special damages, including but not limited to, damages in any way connected with the use of, interpretation of, information or analysis provided by Alpha Analytical.

We strongly urge our clients to comply with EPA protocol regarding sample volume, preservation, cooling, containers, sampling procedures, holding time and splitting of samples in the field.

Certification Information

Last revised December 11, 2013

The following analytes are not included in our NELAP Scope of Accreditation:

Westborough Facility
EPA 524.2: Acetone, 2-Butanone (Methyl ethyl ketone (MEK)), Tert-butyl alcohol, 2-Hexanone, Tetrahydrofuran, 1,3,5-Trichlorobenzene, 4-Methyl-2-pentanone (MIBK), Carbon disulfide, Diethyl ether.
EPA 8260C: 1,2,4,5-Tetramethylbenzene, 4-Ethyltoluene, Iodomethane (methyl iodide), Methyl methacrylate, Azobenzene.
EPA 8330A/B: PETN, Picric Acid, Nitroglycerine, 2,6-DANT, 2,4-DANT.
EPA 8270D: 1-Methylnaphthalene, Dimethylnaphthalene,1,4-Diphenylhydrazine.
EPA 625: 4-Chloroaniline, 4-Methylphenol.
SM4500: Soil: Total Phosphorus, TKN, NO2, NO3.
EPA 9071: Total Petroleum Hydrocarbons, Oil & Grease.

Mansfield Facility
EPA 8270D: Biphenyl.
EPA TO-15: Halothane, 2,4,4-Trimethyl-2-pentene, 2,4,4-Trimethyl-1-pentene, Thiophene, 2-Methylthiophene, 3-Methylthiophene, 2-Ethylthiophene, 1,2,3-Trimethylbenzene, Indan, Indene, 1,2,4,5-Tetramethylbenzene, Benzothiophene, 1-Methylnaphthalene.

The following analytes are included in our Massachusetts DEP Scope of Accreditation, Westborough Facility:

Drinking Water
EPA 200.8: Sb,As,Ba,Be,Cd,Cr,Cu,Pb,Ni,Se,Tl; **EPA 200.7**: Ba,Be,Ca,Cd,Cr,Cu,Na; **EPA 245.1:** Mercury;
EPA 300.0: Nitrate-N, Fluoride, Sulfate; **EPA 353.2**: Nitrate-N, Nitrite-N; **SM4500NO3-F**: Nitrate-N, Nitrite-N; **SM4500F-C, SM4500CN-CE, EPA 180.1, SM2130B, SM4500Cl-D, SM2320B, SM2540C, SM4500H-B**
EPA 332: Perchlorate.
Microbiology: **SM9215B; SM9223-P/A, SM9223B-Colilert-QT, Enterolert-QT.**

Non-Potable Water
EPA 200.8: Al,Sb,As,Be,Cd,Cr,Cu,Pb,Mn,Ni,Se,Ag,Tl,Zn;
EPA 200.7: Al,Sb,As,Be,Cd,Ca,Cr,Co,Cu,Fe,Pb,Mg,Mn,Mo,Ni,K,Se,Ag,Na,Sr,Ti,Tl,V,Zn;
EPA 245.1, SM4500H,B, EPA 120.1, SM2510B, SM2540C, SM2340B, SM2320B, SM4500CL-E, SM4500F-BC, SM426C, SM4500NH3-BH, **EPA 350.1**: Ammonia-N, **LACHAT 10-107-06-1-B**: Ammonia-N, **SM4500NO3-F, EPA 353.2**: Nitrate-N**, SM4500NH3-BC-NES, EPA 351.1, SM4500P-E, SM4500P-B, E, SM5220D, EPA 410.4, SM5210B, SM5310C, SM4500CL-D, EPA 1664, SM14 510AC, EPA 420.1, SM4500-CN-CE, SM2540D.**
EPA 624: Volatile Halocarbons & Aromatics,
EPA 608: Chlordane, Toxaphene, Aldrin, alpha-BHC, beta-BHC, gamma-BHC, delta-BHC, Dieldrin, DDD, DDE, DDT, Endosulfan I, Endosulfan II, Endosulfan sulfate, Endrin, Endrin Aldehyde, Heptachlor, Heptachlor Epoxide, PCBs
EPA 625: SVOC (Acid/Base/Neutral Extractables), **EPA 600/4-81-045**: PCB-Oil.
Microbiology: **SM9223B-Colilert-QT; Enterolert-QT, SM9222D-MF**.

For a complete listing of analytes and methods, please contact your Alpha Project Manager.

AIR ANALYSIS

PAGE 1 OF 1

CHAIN OF CUSTODY

ALPHA ANALYTICAL
320 Forbes Blvd, Mansfield, MA 02048
TEL: 508-822-9300 FAX: 508-822-3288

Date Rec'd in Lab:

ALPHA Job #: L1405769

Client Information

Client: TRC
Address: 650 SUFFOLK ST
LOWELL MA
Phone: 978-970-5600
Fax:
Email: DSULLIVAN ALEONARD@TRCSOLUTIONS.COM
☐ These samples have been previously analyzed by Alpha

Project Information

Project Name: NBHS IRA O&M
Project Location: NEW BEDFORD MA.
Project #: 115058
Project Manager: DAVID SULLIVAN
ALPHA Quote #:

Turn-Around Time

☑ Standard ☐ RUSH (only confirmed if pre-approved!)
Date Due: 3/27 Time:

Report Information - Data Deliverables

☐ FAX
☑ ADEx
Criteria Checker:
(Default based on Regulatory Criteria Indicated)
Other Formats:
☑ EMAIL (standard pdf report)
☐ Additional Deliverables:
Report to: (if different than Project Manager)

Billing Information

☐ Same as Client info PO #: C115058

Regulatory Requirements/Report Limits

State/Fed	Program	Criteria
MA	MCP	

Other Project Specific Requirements/Comments: 115058 PH 1320 TSK8

All Columns Below Must Be Filled Out

ANALYSIS

ALPHA Lab ID (Lab Use Only)	Sample ID	Collection Date	Start Time	End Time	Initial Vacuum	Final Vacuum	Sample Matrix*	Sampler's Initials	Can Size	I D Can	I D - Flow Controller	TO-14A by TO-15	TO-15	TO-15 SIM	APH	FIXED GASES	TO-13A	TO-4/TO-10	Sample Comments (i.e. PID)
05769 01	VAPOR INLET	3/17	21:39	21:48	-28.6	-2	SV	JF	2.7L	497	0501			✓					
✓ 02	VAPOR OUTLET	3/17	21:41	21:51	-28.6	-2.4	SV	JF	2.7L	507	0015			✓					

*SAMPLE MATRIX CODES
AA = Ambient Air (Indoor/Outdoor)
SV = Soil Vapor/Landfill Gas/SVE
Other = Please Specify

Container Type				CS			

Relinquished By:	Date/Time	Received By:	Date/Time:
Jason C. Fino	3/19/14	[illegible]	3/19/14 1115
[illegible]	3/19/14 1850	[illegible]	3/19/14 1850

Please print clearly, legibly and completely. Samples can not be logged in and turnaround time clock will not start until any ambiguities are resolved. BY EXECUTING THIS COC, THE CLIENT HAS READ AND AGREES TO BE BOUND BY ALPHA'S TERMS & CONDITIONS. (See reverse side.)

Form No: 101-02 (19-Jun-09)

ANALYTICAL REPORT

Lab Number:	L1408582
Client:	TRC Environmental Consultants Wannalancit Mills 650 Suffolk Street Lowell, MA 01854
ATTN:	David Sullivan
Phone:	(978) 656-3565
Project Name:	NBHS O&M
Project Number:	115058
Report Date:	04/30/14

The original project report/data package is held by Alpha Analytical. This report/data package is paginated and should be reproduced only in its entirety. Alpha Analytical holds no responsibility for results and/or data that are not consistent with the original.

Certifications & Approvals: NY (11627), CT (PH-0141), NH (2206), NJ NELAP (MA015), RI (LAO00299), PA (68-02089), LA NELAP (03090), FL (E87814), TX (T104704419), WA (C954), DOD (L2217.01), USDA (Permit #P330-11-00109), US Army Corps of Engineers.

320 Forbes Boulevard, Mansfield, MA 02048-1806
508-822-9300 (Fax) 508-822-3288 800-624-9220 - www.alphalab.com

Project Name: NBHS O&M
Project Number: 115058

Lab Number: L1408582
Report Date: 04/30/14

Alpha Sample ID	Client ID	Sample Location	Collection Date/Time
L1408582-01	VAPOR INLET	NEW BEDFORD MA	04/21/14 16:15
L1408582-02	VAPOR OUTLET	NEW BEDFORD MA	04/21/14 16:30

Project Name: NBHS O&M
Project Number: 115058

Lab Number: L1408582
Report Date: 04/30/14

Case Narrative

The samples were received in accordance with the Chain of Custody and no significant deviations were encountered during the preparation or analysis unless otherwise noted. Sample Receipt, Container Information, and the Chain of Custody are located at the back of the report.

Results contained within this report relate only to the samples submitted under this Alpha Lab Number and meet all of the requirements of NELAC, for all NELAC accredited parameters. The data presented in this report is organized by parameter (i.e. VOC, SVOC, etc.). Sample specific Quality Control data (i.e. Surrogate Spike Recovery) is reported at the end of the target analyte list for each individual sample, followed by the Laboratory Batch Quality Control at the end of each parameter. If a sample was re-analyzed or re-extracted due to a required quality control corrective action and if both sets of data are reported, the Laboratory ID of the re-analysis or re-extraction is designated with an "R" or "RE", respectively. When multiple Batch Quality Control elements are reported (e.g. more than one LCS), the associated samples for each element are noted in the grey shaded header line of each data table. Any Laboratory Batch, Sample Specific % recovery or RPD value that is outside the listed Acceptance Criteria is bolded in the report. Performance criteria for CAM and RCP methods allow for some LCS compound failures to occur and still be within method compliance. In these instances, the specific failures are not narrated but are noted in the associated QC table. This information is also incorporated in the Data Usability format for our Data Merger tool where it can be reviewed along with any associated usability implications. Soil/sediments, solids and tissues are reported on a dry weight basis unless otherwise noted. Definitions of all data qualifiers and acronyms used in this report are provided in the Glossary located at the back of the report.

In reference to questions H (CAM) or 4 (RCP) when "NO" is checked, the performance criteria for CAM and RCP methods allow for some quality control failures to occur and still be within method compliance. In these instances the specific failure is not narrated but noted in the associated QC table. The information is also incorporated in the Data Usability format of our Data Merger tool where it can be reviewed along with any associated usability implications.

Please see the associated ADEx data file for a comparison of laboratory reporting limits that were achieved with the regulatory Numerical Standards requested on the Chain of Custody.

HOLD POLICY
For samples submitted on hold, Alpha's policy is to hold samples (with the exception of Air canisters) free of charge for 21 calendar days from the date the project is completed. After 21 calendar days, we will dispose of all samples submitted including those put on hold unless you have contacted your Client Service Representative and made arrangements for Alpha to continue to hold the samples. Air canisters will be disposed after 3 business days from the date the project is completed.

Please contact Client Services at 800-624-9220 with any questions.

Project Name: NBHS O&M **Lab Number:** L1408582
Project Number: 115058 **Report Date:** 04/30/14

Case Narrative (continued)

PCBs in Air

Sample L1408582-01: The peaks present match the retention time of Aroclor 1248 however the chromatographic pattern is not an identical match.

The results in ug/m3 are attached as an addendum to the end of the summary report.

I, the undersigned, attest under the pains and penalties of perjury that, to the best of my knowledge and belief and based upon my personal inquiry of those responsible for providing the information contained in this analytical report, such information is accurate and complete. This certificate of analysis is not complete unless this page accompanies any and all pages of this report.

Authorized Signature: Elizabeth Porta

Title: Technical Director/Representative Date: 04/30/14

AIR

Project Name: NBHS O&M
Project Number: 115058

Lab Number: L1408582
Report Date: 04/30/14

SAMPLE RESULTS

Lab ID:	L1408582-01	Date Collected:	04/21/14 16:15
Client ID:	VAPOR INLET	Date Received:	04/23/14
Sample Location:	NEW BEDFORD MA	Field Prep:	Not Specified
Matrix:	Air Media	Extraction Method:	EPA 3540C
Analytical Method:	48,TO-10A	Extraction Date:	04/24/14 18:25
Analytical Date:	04/26/14 13:56		
Analyst:	JS		

Parameter	Result	Qualifier	Units	RL	MDL	Dilution Factor	Column
PCB Aroclors in Air - Mansfield Lab							
Aroclor 1016	ND		ng/cart	30.0	--	1	A
Aroclor 1221	ND		ng/cart	100	--	1	A
Aroclor 1232	ND		ng/cart	30.0	--	1	A
Aroclor 1242	441		ng/cart	20.0	--	1	B
Aroclor 1248	ND		ng/cart	20.0	--	1	A
Aroclor 1254	625		ng/cart	20.0	--	1	A
Aroclor 1260	ND		ng/cart	20.0	--	1	A
Aroclor 1262	ND		ng/cart	20.0	--	1	A
Aroclor 1268	ND		ng/cart	20.0	--	1	A

Surrogate	% Recovery	Qualifier	Acceptance Criteria	Column
Tetrachloro-meta-Xylene	78		60-120	A
Decachlorobiphenyl	73		60-120	A
Tetrachloro-meta-Xylene	71		60-120	B
Decachlorobiphenyl	71		60-120	B

Project Name: NBHS O&M
Project Number: 115058

Lab Number: L1408582
Report Date: 04/30/14

SAMPLE RESULTS

Lab ID:	L1408582-02	Date Collected:	04/21/14 16:30
Client ID:	VAPOR OUTLET	Date Received:	04/23/14
Sample Location:	NEW BEDFORD MA	Field Prep:	Not Specified
Matrix:	Air Media	Extraction Method:	EPA 3540C
Analytical Method:	48,TO-10A	Extraction Date:	04/24/14 18:25
Analytical Date:	04/26/14 14:26		
Analyst:	JS		

Parameter	Result	Qualifier	Units	RL	MDL	Dilution Factor	Column
PCB Aroclors in Air - Mansfield Lab							
Aroclor 1016	ND		ng/cart	30.0	--	1	A
Aroclor 1221	ND		ng/cart	100	--	1	A
Aroclor 1232	ND		ng/cart	30.0	--	1	A
Aroclor 1242	ND		ng/cart	20.0	--	1	A
Aroclor 1248	ND		ng/cart	20.0	--	1	A
Aroclor 1254	ND		ng/cart	20.0	--	1	A
Aroclor 1260	ND		ng/cart	20.0	--	1	A
Aroclor 1262	ND		ng/cart	20.0	--	1	A
Aroclor 1268	ND		ng/cart	20.0	--	1	A

Surrogate	% Recovery	Qualifier	Acceptance Criteria	Column
Tetrachloro-meta-Xylene	87		60-120	A
Decachlorobiphenyl	79		60-120	A
Tetrachloro-meta-Xylene	78		60-120	B
Decachlorobiphenyl	75		60-120	B

Project Name: NBHS O&M
Project Number: 115058

Lab Number: L1408582
Report Date: 04/30/14

Method Blank Analysis
Batch Quality Control

Analytical Method: 48,TO-10A
Analytical Date: 04/26/14 12:55
Analyst: JS

Extraction Method: EPA 3540C
Extraction Date: 04/24/14 18:25

Parameter	Result	Qualifier	Units	RL	MDL	Column
PCB Aroclors in Air - Mansfield Lab for sample(s): 01-02 Batch: WG684942-1						
Aroclor 1016	ND		ng/cart	30.0	--	A
Aroclor 1221	ND		ng/cart	100	--	A
Aroclor 1232	ND		ng/cart	30.0	--	A
Aroclor 1242	ND		ng/cart	20.0	--	A
Aroclor 1248	ND		ng/cart	20.0	--	A
Aroclor 1254	ND		ng/cart	20.0	--	A
Aroclor 1260	ND		ng/cart	20.0	--	A
Aroclor 1262	ND		ng/cart	20.0	--	A
Aroclor 1268	ND		ng/cart	20.0	--	A

Surrogate	%Recovery	Qualifier	Acceptance Criteria	Column
Tetrachloro-meta-Xylene	91		60-120	A
Tetrachloro-meta-Xylene	83		60-120	B
Decachlorobiphenyl	77		60-120	B
Decachlorobiphenyl	81		60-120	A

Lab Control Sample Analysis
Batch Quality Control

Project Name: NBHS O&M
Project Number: 115058

Lab Number: L1408582
Report Date: 04/30/14

Parameter	LCS %Recovery	Qual	LCSD %Recovery	Qual	%Recovery Limits	RPD	Qual	RPD Limits	Column
PCB Aroclors in Air - Mansfield Lab Associated sample(s): 01-02 Batch: WG684942-2									
Aroclor 1016	67		-		40-140	-		50	B
Aroclor 1260	76		-		40-140	-		50	B

Surrogate	LCS %Recovery	Qual	LCSD %Recovery	Qual	Acceptance Criteria	Column
Tetrachloro-meta-Xylene	88				60-120	A
Decachlorobiphenyl	80				60-120	A
Tetrachloro-meta-Xylene	81				60-120	B
Decachlorobiphenyl	77				60-120	B

Project Name: NBHS O&M
Project Number: 115058

Lab Number: L1408582
Report Date: 04/30/14

Sample Receipt and Container Information

Were project specific reporting limits specified? YES

Reagent H2O Preserved Vials Frozen on: NA

Cooler Information Custody Seal

Cooler	
A	Absent

Container Information

Container ID	Container Type	Cooler	pH	Temp deg C	Pres	Seal	Analysis(*)
L1408582-01A	PUF Air Cartridge - High or Low	A	N/A	4.7	Y	Absent	A2-TO10-AROCLOR(7)
L1408582-02A	PUF Air Cartridge - High or Low	A	N/A	4.7	Y	Absent	A2-TO10-AROCLOR(7)

*Values in parentheses indicate holding time in days

Project Name:	NBHS O&M	**Lab Number:**	L1408582
Project Number:	115058	**Report Date:**	04/30/14

GLOSSARY

Acronyms

EDL	- Estimated Detection Limit: This value represents the level to which target analyte concentrations are reported as estimated values, when those target analyte concentrations are quantified below the reporting limit (RL). The EDL includes any adjustments from dilutions, concentrations or moisture content, where applicable. The use of EDLs is specific to the analysis of PAHs using Solid-Phase Microextraction (SPME).
EPA	- Environmental Protection Agency.
LCS	- Laboratory Control Sample: A sample matrix, free from the analytes of interest, spiked with verified known amounts of analytes or a material containing known and verified amounts of analytes.
LCSD	- Laboratory Control Sample Duplicate: Refer to LCS.
LFB	- Laboratory Fortified Blank: A sample matrix, free from the analytes of interest, spiked with verified known amounts of analytes or a material containing known and verified amounts of analytes.
MDL	- Method Detection Limit: This value represents the level to which target analyte concentrations are reported as estimated values, when those target analyte concentrations are quantified below the reporting limit (RL). The MDL includes any adjustments from dilutions, concentrations or moisture content, where applicable.
MS	- Matrix Spike Sample: A sample prepared by adding a known mass of target analyte to a specified amount of matrix sample for which an independent estimate of target analyte concentration is available.
MSD	- Matrix Spike Sample Duplicate: Refer to MS.
NA	- Not Applicable.
NC	- Not Calculated: Term is utilized when one or more of the results utilized in the calculation are non-detect at the parameter's reporting unit.
NI	- Not Ignitable.
RL	- Reporting Limit: The value at which an instrument can accurately measure an analyte at a specific concentration. The RL includes any adjustments from dilutions, concentrations or moisture content, where applicable.
RPD	- Relative Percent Difference: The results from matrix and/or matrix spike duplicates are primarily designed to assess the precision of analytical results in a given matrix and are expressed as relative percent difference (RPD). Values which are less than five times the reporting limit for any individual parameter are evaluated by utilizing the absolute difference between the values; although the RPD value will be provided in the report.
SRM	- Standard Reference Material: A reference sample of a known or certified value that is of the same or similar matrix as the associated field samples.

Footnotes

1	- The reference for this analyte should be considered modified since this analyte is absent from the target analyte list of the original method.

Terms

Analytical Method: Both the document from which the method originates and the analytical reference method. (Example: EPA 8260B is shown as 1,8260B.) The codes for the reference method documents are provided in the References section of the Addendum.

Data Qualifiers

A	- Spectra identified as "Aldol Condensation Product".
B	- The analyte was detected above the reporting limit in the associated method blank. Flag only applies to associated field samples that have detectable concentrations of the analyte at less than ten times (10x) the concentration found in the blank. For MCP-related projects, flag only applies to associated field samples that have detectable concentrations of the analyte at less than ten times (10x) the concentration found in the blank. For DOD-related projects, flag only applies to associated field samples that have detectable concentrations of the analyte at less than ten times (10x) the concentration found in the blank AND the analyte was detected above one-half the reporting limit (or above the reporting limit for common lab contaminants) in the associated method blank. For NJ-Air-related projects, flag only applies to associated field samples that have detectable concentrations of the analyte above the reporting limit.
C	- Co-elution: The target analyte co-elutes with a known lab standard (i.e. surrogate, internal standards, etc.) for co-extracted analyses.
D	- Concentration of analyte was quantified from diluted analysis. Flag only applies to field samples that have detectable concentrations of the analyte.
E	- Concentration of analyte exceeds the range of the calibration curve and/or linear range of the instrument.
G	- The concentration may be biased high due to matrix interferences (i.e, co-elution) with non-target compound(s). The result should be considered estimated.
H	- The analysis of pH was performed beyond the regulatory-required holding time of 15 minutes from the time of sample collection.
I	- The lower value for the two columns has been reported due to obvious interference.

Report Format: Data Usability Report

Project Name:	NBHS O&M	**Lab Number:**	L1408582
Project Number:	115058	**Report Date:**	04/30/14

Data Qualifiers

M - Reporting Limit (RL) exceeds the MCP CAM Reporting Limit for this analyte.

NJ - Presumptive evidence of compound. This represents an estimated concentration for Tentatively Identified Compounds (TICs), where the identification is based on a mass spectral library search.

P - The RPD between the results for the two columns exceeds the method-specified criteria.

Q - The quality control sample exceeds the associated acceptance criteria. For DOD-related projects, LCS and/or Continuing Calibration Standard exceedences are also qualified on all associated sample results. Note: This flag is not applicable for matrix spike recoveries when the sample concentration is greater than 4x the spike added or for batch duplicate RPD when the sample concentrations are less than 5x the RL. (Metals only.)

R - Analytical results are from sample re-analysis.

RE - Analytical results are from sample re-extraction.

S - Analytical results are from modified screening analysis.

J - Estimated value. This represents an estimated concentration for Tentatively Identified Compounds (TICs).

ND - Not detected at the reporting limit (RL) for the sample.

Report Format: Data Usability Report

REFERENCES

48 Compendium of Methods for the Determination of Toxic Organic Compounds in Ambient Air. Second Edition. EPA/625/R-96/010b, January 1999.

LIMITATION OF LIABILITIES

Alpha Analytical performs services with reasonable care and diligence normal to the analytical testing laboratory industry. In the event of an error, the sole and exclusive responsibility of Alpha Analytical shall be to re-perform the work at it's own expense. In no event shall Alpha Analytical be held liable for any incidental, consequential or special damages, including but not limited to, damages in any way connected with the use of, interpretation of, information or analysis provided by Alpha Analytical.

We strongly urge our clients to comply with EPA protocol regarding sample volume, preservation, cooling, containers, sampling procedures, holding time and splitting of samples in the field.

Certification Information

Last revised April 15, 2014

The following analytes are not included in our NELAP Scope of Accreditation:

Westborough Facility
EPA 524.2: Acetone, 2-Butanone (Methyl ethyl ketone (MEK)), Tert-butyl alcohol, 2-Hexanone, Tetrahydrofuran, 1,3,5-Trichlorobenzene, 4-Methyl-2-pentanone (MIBK), Carbon disulfide, Diethyl ether.
EPA 8260C: 1,2,4,5-Tetramethylbenzene, 4-Ethyltoluene, Iodomethane (methyl iodide), Methyl methacrylate, Azobenzene.
EPA 8330A/B: PETN, Picric Acid, Nitroglycerine, 2,6-DANT, 2,4-DANT.
EPA 8270D: 1-Methylnaphthalene, Dimethylnaphthalene,1,4-Diphenylhydrazine.
EPA 625: 4-Chloroaniline, 4-Methylphenol.
SM4500: Soil: Total Phosphorus, TKN, NO2, NO3.
EPA 9071: Total Petroleum Hydrocarbons, Oil & Grease.

Mansfield Facility
EPA 8270D: Biphenyl.
EPA 2540D: TSS
EPA TO-15: Halothane, 2,4,4-Trimethyl-2-pentene, 2,4,4-Trimethyl-1-pentene, Thiophene, 2-Methylthiophene, 3-Methylthiophene, 2-Ethylthiophene, 1,2,3-Trimethylbenzene, Indan, Indene, 1,2,4,5-Tetramethylbenzene, Benzothiophene, 1-Methylnaphthalene.

The following analytes are included in our Massachusetts DEP Scope of Accreditation, Westborough Facility:

Drinking Water
EPA 200.8: Sb,As,Ba,Be,Cd,Cr,Cu,Pb,Ni,Se,Tl; **EPA 200.7**: Ba,Be,Ca,Cd,Cr,Cu,Na; **EPA 245.1:** Mercury;
EPA 300.0: Nitrate-N, Fluoride, Sulfate; **EPA 353.2**: Nitrate-N, Nitrite-N; **SM4500NO3-F**: Nitrate-N, Nitrite-N; **SM4500F-C, SM4500CN-CE, EPA 180.1, SM2130B, SM4500Cl-D, SM2320B, SM2540C, SM4500H-B**
EPA 332: Perchlorate.
Microbiology: **SM9215B; SM9223-P/A, SM9223B-Colilert-QT, Enterolert-QT.**

Non-Potable Water
EPA 200.8: Al,Sb,As,Be,Cd,Cr,Cu,Pb,Mn,Ni,Se,Ag,Tl,Zn;
EPA 200.7: Al,Sb,As,Be,Cd,Ca,Cr,Co,Cu,Fe,Pb,Mg,Mn,Mo,Ni,K,Se,Ag,Na,Sr,Ti,Tl,V,Zn;
EPA 245.1, SM4500H,B, EPA 120.1, SM2510B, SM2540C, SM2340B, SM2320B, SM4500CL-E, SM4500F-BC, SM426C, SM4500NH3-BH, **EPA 350.1**: Ammonia-N, **LACHAT 10-107-06-1-B**: Ammonia-N, **SM4500NO3-F, EPA 353.2**: Nitrate-N**, SM4500NH3-BC-NES, EPA 351.1, SM4500P-E, SM4500P-B, E, SM5220D, EPA 410.4, SM5210B, SM5310C, SM4500CL-D, EPA 1664, SM14 510AC, EPA 420.1, SM4500-CN-CE, SM2540D.**
EPA 624: Volatile Halocarbons & Aromatics,
EPA 608: Chlordane, Toxaphene, Aldrin, alpha-BHC, beta-BHC, gamma-BHC, delta-BHC, Dieldrin, DDD, DDE, DDT, Endosulfan I, Endosulfan II, Endosulfan sulfate, Endrin, Endrin Aldehyde, Heptachlor, Heptachlor Epoxide, PCBs
EPA 625: SVOC (Acid/Base/Neutral Extractables), **EPA 600/4-81-045**: PCB-Oil.
Microbiology: **SM9223B-Colilert-QT; Enterolert-QT, SM9222D-MF**.

For a complete listing of analytes and methods, please contact your Alpha Project Manager.

AIR ANALYSIS - SORBENT MEDIA
CHAIN OF CUSTODY

Page 1 of 1

Date Rec'd in Lab: 4/23/14

ALPHA Job #: L1408582

Westborough, MA
TEL: 508-898-9220
FAX: 508-822-3288

Mansfield, MA
TEL: 508-822-9300
508-822-3288

Client Information

Client: TRC
Address: 650 SUFFOLK ST
LOWELL MA.
Phone: 978-970-5600
Fax:
Email: DSULLIVANALEONARD@TRCSOLUTIONS.COM

Project Information

Project Name: NBHS O&M
Project Location: NEW BEDFORD MA
Project #: 115058
(Use Project name as Project #) ☑
Project Manager: DAVID SULLIVAN
ALPHA Quote #:

Turn-Around Time

Standard ☑ Due Date:
Rush (only if pre approved) ☐ Time:

Report Information - Data Deliverables

☐ FAX
☑ ADEx
Criteria Checker:
Other Formats:
☑ EMAIL
☐ Add'l Deliverables

Report to: (if different than Project Manager)

Billing Information

☐ Same as Client Info
PO # C115058

Regulatory Requirements/Report Limits

State/Fed	Program	Criteria
MA	MCP.	

These samples have been previously analyzed by Alpha ☑

Other Project Specific Requirements/ Comments/Detection Limits

For PCBs, selection is REQUIRED:
☐ Congeners
☐ Homologs
☑ Aroclors (Low Vol only)

NOTE: For metals, please specify elements of interest and media type.
☐ PM-10
☐ TSP
☐ MCE

All Columns Below Must Be Filled Out

ALPHA Lab ID (Lab Use Only)	Sample ID	Collection Date	Start Time	End Time	Flow Rate (L/min)	Total Volume (L)	Sample Matrix*	Sampler's Initials	Media ID# (1)	TO-13A	PCBs (High Vol)	PCBs (Low Vol)	TO-11A	Hg via NIOSH 6009 Mod.	Metals	TO-17	PCBs SOXHLET	Sample Comments (i.e. PID)
08582.01	VAPOR INLET	4/21	12:15	16:15	5	1200	SV	JF	LP371			→					✓	96°
02	VAPOR OUTLET	4/21	12:30	16:30	5	1200	SV	JF	LP355			→					✓	88°
Media Type										P	P	P	D	T	F	T	P	

* SAMPLE MATRIX CODES
AA = Ambient Air (Indoor/Outdoor)
SV = Soil Vapor/Landfill Gas/SVE
Other = Please Specify

(1) Required for PUF cartridges, PM-10 and TSP filters and TO-17 sorbent tubes.

Media Code
D = DNPH Cartridge
F = Filter
P = PUF Cartridge
T = Sorbent Tube
O = Other

Relinquished By:	Date/Time	Received By:	Date/Time
Jason C. Fiorio	4/22	Nathan Salle	4/23 @08:00
[illegible]	4/23/14 10:09	[illegible]	4/23/14 1100
[illegible]	4/23/14 1145	[illegible]	4/23/14 1628
[illegible]	4/23/14 1722	[illegible]	4/23/14 17:22

Please print clearly, legibly and completely. Samples can not be logged in and turnaround time clock will not start until any ambiguities are resolved. BY EXECUTING THIS COC, THE CLIENT HAS READ AND AGREES TO BE BOUND BY ALPHA'S TERMS & CONDITIONS. (See reverse side.)

Form No: 101-13 (rev 01-OCT-2013)

Sample Results

Client ID:	Vapor Inlet	Sampling Time:	4 hrs
Lab ID:	L1408582-01	Sampling Rate:	5 L/min
Matrix:	Air Media	Total Flow:	1200 L

PCB Aroclors in Air

	ng/cart				ug/m3				Dilution	
Parameter	**Result**	**Units**	**RL**	**MDL**	**Result**	**Units**	**RL**	**MDL**	**Factor**	**Column**
									1	A
Aroclor 1016	ND	ng/cart	30	-	ND	ug/m3	0.0250	-	1	A
Aroclor 1221	ND	ng/cart	100	-	ND	ug/m3	0.0833	-	1	A
Aroclor 1232	ND	ng/cart	30	-	ND	ug/m3	0.0250	-	1	A
Aroclor 1242	441	ng/cart	20	-	0.368	ug/m3	0.0167	-	1	A
Aroclor 1248	ND	ng/cart	20	-	ND	ug/m3	0.0167	-	1	A
Aroclor 1254	625	ng/cart	20	-	0.521	ug/m3	0.0167	-	1	A
Aroclor 1260	ND	ng/cart	20	-	ND	ug/m3	0.0167	-	1	A
Aroclor 1262	ND	ng/cart	20	-	ND	ug/m3	0.0167	-	1	A
Aroclor 1268	ND	ng/cart	20	-	ND	ug/m3	0.0167	-	1	A

Sample Results

Client ID:	Vapor Outlet	Sampling Time:	4 hrs
Lab ID:	L1408582-02	Sampling Rate:	5 L/min
Matrix:	Air Media	Total Flow:	1200 L

PCB Aroclors in Air

	ng/cart				ug/m3				Dilution	
Parameter	Result	Units	RL	MDL	Result	Units	RL	MDL	Factor	Column
									1	A
Aroclor 1016	ND	ng/cart	30	-	ND	ug/m3	0.0250	-	1	A
Aroclor 1221	ND	ng/cart	100	-	ND	ug/m3	0.0833	-	1	A
Aroclor 1232	ND	ng/cart	30	-	ND	ug/m3	0.0250	-	1	A
Aroclor 1242	ND	ng/cart	20	-	ND	ug/m3	0.0167	-	1	A
Aroclor 1248	ND	ng/cart	20	-	ND	ug/m3	0.0167	-	1	A
Aroclor 1254	ND	ng/cart	20	-	ND	ug/m3	0.0167	-	1	A
Aroclor 1260	ND	ng/cart	20	-	ND	ug/m3	0.0167	-	1	A
Aroclor 1262	ND	ng/cart	20	-	ND	ug/m3	0.0167	-	1	A
Aroclor 1268	ND	ng/cart	20	-	ND	ug/m3	0.0167	-	1	A

ANALYTICAL REPORT

Lab Number:	L1408488
Client:	TRC Environmental Consultants Wannalancit Mills 650 Suffolk Street Lowell, MA 01854
ATTN:	David Sullivan
Phone:	(978) 656-3565
Project Name:	NHBS O&M
Project Number:	115058
Report Date:	04/30/14

The original project report/data package is held by Alpha Analytical. This report/data package is paginated and should be reproduced only in its entirety. Alpha Analytical holds no responsibility for results and/or data that are not consistent with the original.

Certifications & Approvals: NY (11627), CT (PH-0141), NH (2206), NJ NELAP (MA015), RI (LAO00299), PA (68-02089), LA NELAP (03090), FL (E87814), TX (T104704419), WA (C954), DOD (L2217.01), USDA (Permit #P330-11-00109), US Army Corps of Engineers.

320 Forbes Boulevard, Mansfield, MA 02048-1806
508-822-9300 (Fax) 508-822-3288 800-624-9220 - www.alphalab.com

Project Name: NHBS O&M
Project Number: 115058

Lab Number: L1408488
Report Date: 04/30/14

Alpha Sample ID	Client ID	Sample Location	Collection Date/Time
L1408488-01	VAPOR INLET	NEW BEDFORD MA	04/21/14 11:43
L1408488-02	VAPOR OUTLET	NEW BEDFORD MA	04/21/14 11:46

Project Name: NHBS O&M **Lab Number:** L1408488

Project Number: 115058 **Report Date:** 04/30/14

MADEP MCP Response Action Analytical Report Certification

This form provides certifications for all samples performed by MCP methods. Please refer to the Sample Results and Container Information sections of this report for specification of MCP methods used for each analysis. The following questions pertain only to MCP Analytical Methods.

An affirmative response to questions A through F is required for "Presumptive Certainty" status		
A	Were all samples received in a condition consistent with those described on the Chain-of-Custody, properly preserved (including temperature) in the field or laboratory, and prepared/analyzed within method holding times?	YES
B	Were the analytical method(s) and all associated QC requirements specified in the selected CAM protocol(s) followed?	YES
C	Were all required corrective actions and analytical response actions specified in the selected CAM protocol(s) implemented for all identified performance standard non-conformances?	YES
D	Does the laboratory report comply with all the reporting requirements specified in CAM VII A, "Quality Assurance and Quality Control Guidelines for the Acquisition and Reporting of Analytical Data?"	YES
E a.	VPH, EPH, and APH Methods only: Was each method conducted without significant modification(s)? (Refer to the individual method(s) for a list of significant modifications).	N/A
E b.	APH and TO-15 Methods only: Was the complete analyte list reported for each method?	YES
F	Were all applicable CAM protocol QC and performance standard non-conformances identified and evaluated in a laboratory narrative (including all "No" responses to Questions A through E)?	YES

A response to questions G, H and I is required for "Presumptive Certainty" status		
G	Were the reporting limits at or below all CAM reporting limits specified in the selected CAM protocol(s)?	NO
H	Were all QC performance standards specified in the CAM protocol(s) achieved?	YES
I	Were results reported for the complete analyte list specified in the selected CAM protocol(s)?	YES

For any questions answered "No", please refer to the case narrative section on the following page(s).

Please note that sample matrix information is located in the Sample Results section of this report.

Project Name: NHBS O&M
Project Number: 115058

Lab Number: L1408488
Report Date: 04/30/14

Case Narrative

The samples were received in accordance with the Chain of Custody and no significant deviations were encountered during the preparation or analysis unless otherwise noted. Sample Receipt, Container Information, and the Chain of Custody are located at the back of the report.

Results contained within this report relate only to the samples submitted under this Alpha Lab Number and meet all of the requirements of NELAC, for all NELAC accredited parameters. The data presented in this report is organized by parameter (i.e. VOC, SVOC, etc.). Sample specific Quality Control data (i.e. Surrogate Spike Recovery) is reported at the end of the target analyte list for each individual sample, followed by the Laboratory Batch Quality Control at the end of each parameter. If a sample was re-analyzed or re-extracted due to a required quality control corrective action and if both sets of data are reported, the Laboratory ID of the re-analysis or re-extraction is designated with an "R" or "RE", respectively. When multiple Batch Quality Control elements are reported (e.g. more than one LCS), the associated samples for each element are noted in the grey shaded header line of each data table. Any Laboratory Batch, Sample Specific % recovery or RPD value that is outside the listed Acceptance Criteria is bolded in the report. Performance criteria for CAM and RCP methods allow for some LCS compound failures to occur and still be within method compliance. In these instances, the specific failures are not narrated but are noted in the associated QC table. This information is also incorporated in the Data Usability format for our Data Merger tool where it can be reviewed along with any associated usability implications. Soil/sediments, solids and tissues are reported on a dry weight basis unless otherwise noted. Definitions of all data qualifiers and acronyms used in this report are provided in the Glossary located at the back of the report.

In reference to questions H (CAM) or 4 (RCP) when "NO" is checked, the performance criteria for CAM and RCP methods allow for some quality control failures to occur and still be within method compliance. In these instances the specific failure is not narrated but noted in the associated QC table. The information is also incorporated in the Data Usability format of our Data Merger tool where it can be reviewed along with any associated usability implications.

Please see the associated ADEx data file for a comparison of laboratory reporting limits that were achieved with the regulatory Numerical Standards requested on the Chain of Custody.

HOLD POLICY
For samples submitted on hold, Alpha's policy is to hold samples (with the exception of Air canisters) free of charge for 21 calendar days from the date the project is completed. After 21 calendar days, we will dispose of all samples submitted including those put on hold unless you have contacted your Client Service Representative and made arrangements for Alpha to continue to hold the samples. Air canisters will be disposed after 3 business days from the date the project is completed.

Please contact Client Services at 800-624-9220 with any questions.

Project Name: NHBS O&M **Lab Number:** L1408488
Project Number: 115058 **Report Date:** 04/30/14

Case Narrative (continued)

MCP Related Narratives

Canisters were released from the laboratory on April 18, 2014. The canister certification data is provided as an addendum.

MCP Volatile Organics in Air

In reference to question G:

One or more of the target analytes did not achieve the requested CAM reporting limits.

I, the undersigned, attest under the pains and penalties of perjury that, to the best of my knowledge and belief and based upon my personal inquiry of those responsible for providing the information contained in this analytical report, such information is accurate and complete. This certificate of analysis is not complete unless this page accompanies any and all pages of this report.

Authorized Signature: Christopher J. Anderson

Title: Technical Director/Representative Date: 04/30/14

AIR

Project Name: NHBS O&M
Project Number: 115058
Lab Number: L1408488
Report Date: 04/30/14

SAMPLE RESULTS

Lab ID: L1408488-01
Client ID: VAPOR INLET
Sample Location: NEW BEDFORD MA
Matrix: Soil_Vapor
Anaytical Method: 101,TO-15
Analytical Date: 04/28/14 21:54
Analyst: MB

Date Collected: 04/21/14 11:43
Date Received: 04/23/14
Field Prep: Not Specified

Parameter	ppbV Results	ppbV RL	ppbV MDL	ug/m3 Results	ug/m3 RL	ug/m3 MDL	Qualifier	Dilution Factor
MCP Volatile Organics in Air - Mansfield Lab								
Vinyl chloride	0.682	0.200	--	1.74	0.511	--		1
Bromomethane	ND	0.200	--	ND	0.777	--		1
Acetone	3.70	1.00	--	8.79	2.38	--		1
1,1-Dichloroethene	ND	0.200	--	ND	0.793	--		1
Methylene chloride	ND	1.40	--	ND	4.86	--		1
trans-1,2-Dichloroethene	1.24	0.200	--	4.92	0.793	--		1
1,1-Dichloroethane	ND	0.200	--	ND	0.809	--		1
Methyl tert butyl ether	ND	0.200	--	ND	0.721	--		1
2-Butanone	0.780	0.200	--	2.30	0.590	--		1
cis-1,2-Dichloroethene	2.05	0.200	--	8.13	0.793	--		1
Chloroform	ND	0.200	--	ND	0.977	--		1
1,2-Dichloroethane	ND	0.200	--	ND	0.809	--		1
1,1,1-Trichloroethane	ND	0.200	--	ND	1.09	--		1
Benzene	ND	0.200	--	ND	0.639	--		1
Carbon tetrachloride	ND	0.200	--	ND	1.26	--		1
1,2-Dichloropropane	ND	0.200	--	ND	0.924	--		1
Bromodichloromethane	ND	0.200	--	ND	1.34	--		1
1,4-Dioxane	ND	0.200	--	ND	0.721	--		1
Trichloroethene	0.649	0.200	--	3.49	1.07	--		1
cis-1,3-Dichloropropene	ND	0.200	--	ND	0.908	--		1
4-Methyl-2-pentanone	ND	0.200	--	ND	0.820	--		1
trans-1,3-Dichloropropene	ND	0.200	--	ND	0.908	--		1
1,1,2-Trichloroethane	ND	0.200	--	ND	1.09	--		1
Toluene	3.36	0.200	--	12.7	0.754	--		1

Project Name: NHBS O&M
Project Number: 115058
Lab Number: L1408488
Report Date: 04/30/14

SAMPLE RESULTS

Lab ID: L1408488-01
Client ID: VAPOR INLET
Sample Location: NEW BEDFORD MA
Date Collected: 04/21/14 11:43
Date Received: 04/23/14
Field Prep: Not Specified

Parameter	ppbV Results	ppbV RL	ppbV MDL	ug/m3 Results	ug/m3 RL	ug/m3 MDL	Qualifier	Dilution Factor
MCP Volatile Organics in Air - Mansfield Lab								
Dibromochloromethane	ND	0.200	--	ND	1.70	--		1
1,2-Dibromoethane	ND	0.200	--	ND	1.54	--		1
Tetrachloroethene	ND	0.200	--	ND	1.36	--		1
Chlorobenzene	ND	0.200	--	ND	0.921	--		1
Ethylbenzene	ND	0.200	--	ND	0.869	--		1
p/m-Xylene	0.702	0.400	--	3.05	1.74	--		1
Bromoform	ND	0.200	--	ND	2.07	--		1
Styrene	ND	0.200	--	ND	0.852	--		1
1,1,2,2-Tetrachloroethane	ND	0.200	--	ND	1.37	--		1
o-Xylene	0.244	0.200	--	1.06	0.869	--		1
1,3-Dichlorobenzene	ND	0.200	--	ND	1.20	--		1
1,4-Dichlorobenzene	ND	0.200	--	ND	1.20	--		1
1,2-Dichlorobenzene	ND	0.200	--	ND	1.20	--		1
1,2,4-Trichlorobenzene	ND	0.200	--	ND	1.48	--		1
Naphthalene	ND	0.200	--	ND	1.05	--		1
Hexachlorobutadiene	ND	0.200	--	ND	2.13	--		1

Internal Standard	% Recovery	Qualifier	Acceptance Criteria
1,4-Difluorobenzene	84		60-140
Bromochloromethane	80		60-140
chlorobenzene-d5	98		60-140

Project Name: NHBS O&M
Project Number: 115058

Lab Number: L1408488
Report Date: 04/30/14

SAMPLE RESULTS

Lab ID: L1408488-02
Client ID: VAPOR OUTLET
Sample Location: NEW BEDFORD MA
Matrix: Soil_Vapor
Anaytical Method: 101,TO15-SIM
Analytical Date: 04/26/14 20:27
Analyst: RY

Date Collected: 04/21/14 11:46
Date Received: 04/23/14
Field Prep: Not Specified

Parameter	ppbV Results	ppbV RL	ppbV MDL	ug/m3 Results	ug/m3 RL	ug/m3 MDL	Qualifier	Dilution Factor
MCP Volatile Organics in Air by SIM - Mansfield Lab								
Vinyl chloride	2.84	0.020	--	7.26	0.051	--		1
Bromomethane	ND	0.020	--	ND	0.078	--		1
Acetone	1.91	1.00	--	4.54	2.38	--		1
1,1-Dichloroethene	ND	0.020	--	ND	0.079	--		1
Methylene chloride	ND	1.40	--	ND	4.86	--		1
trans-1,2-Dichloroethene	3.28	0.020	--	13.0	0.079	--		1
1,1-Dichloroethane	ND	0.020	--	ND	0.081	--		1
Methyl tert butyl ether	ND	0.020	--	ND	0.072	--		1
2-Butanone	0.241	0.200	--	0.711	0.590	--		1
cis-1,2-Dichloroethene	9.01	0.020	--	35.7	0.079	--		1
Chloroform	0.173	0.020	--	0.845	0.098	--		1
1,2-Dichloroethane	ND	0.020	--	ND	0.081	--		1
1,1,1-Trichloroethane	ND	0.020	--	ND	0.109	--		1
Benzene	0.515	0.100	--	1.65	0.319	--		1
Carbon tetrachloride	ND	0.020	--	ND	0.126	--		1
1,2-Dichloropropane	ND	0.020	--	ND	0.092	--		1
Bromodichloromethane	ND	0.020	--	ND	0.134	--		1
1,4-Dioxane	ND	0.100	--	ND	0.360	--		1
Trichloroethene	ND	0.020	--	ND	0.107	--		1
cis-1,3-Dichloropropene	ND	0.020	--	ND	0.091	--		1
4-Methyl-2-pentanone	ND	0.200	--	ND	0.820	--		1
trans-1,3-Dichloropropene	ND	0.020	--	ND	0.091	--		1
1,1,2-Trichloroethane	ND	0.020	--	ND	0.109	--		1
Toluene	0.554	0.050	--	2.09	0.188	--		1

Project Name: NHBS O&M
Project Number: 115058
Lab Number: L1408488
Report Date: 04/30/14

SAMPLE RESULTS

Lab ID: L1408488-02
Client ID: VAPOR OUTLET
Sample Location: NEW BEDFORD MA
Date Collected: 04/21/14 11:46
Date Received: 04/23/14
Field Prep: Not Specified

Parameter	ppbV Results	ppbV RL	ppbV MDL	ug/m3 Results	ug/m3 RL	ug/m3 MDL	Qualifier	Dilution Factor
MCP Volatile Organics in Air by SIM - Mansfield Lab								
Dibromochloromethane	ND	0.020	--	ND	0.170	--		1
1,2-Dibromoethane	ND	0.020	--	ND	0.154	--		1
Tetrachloroethene	0.021	0.020	--	0.142	0.136	--		1
Chlorobenzene	0.055	0.020	--	0.253	0.092	--		1
Ethylbenzene	0.083	0.020	--	0.361	0.087	--		1
p/m-Xylene	0.304	0.040	--	1.32	0.174	--		1
Bromoform	ND	0.020	--	ND	0.207	--		1
Styrene	ND	0.020	--	ND	0.085	--		1
1,1,2,2-Tetrachloroethane	ND	0.020	--	ND	0.137	--		1
o-Xylene	0.098	0.020	--	0.426	0.087	--		1
1,3-Dichlorobenzene	ND	0.020	--	ND	0.120	--		1
1,4-Dichlorobenzene	0.043	0.020	--	0.259	0.120	--		1
1,2-Dichlorobenzene	0.741	0.020	--	4.46	0.120	--		1
1,2,4-Trichlorobenzene	ND	0.050	--	ND	0.371	--		1
Naphthalene	ND	0.050	--	ND	0.262	--		1
Hexachlorobutadiene	ND	0.050	--	ND	0.533	--		1

Internal Standard	% Recovery	Qualifier	Acceptance Criteria
1,4-difluorobenzene	95		60-140
bromochloromethane	86		60-140
chlorobenzene-d5	94		60-140

Project Name: NHBS O&M
Project Number: 115058

Lab Number: L1408488
Report Date: 04/30/14

Method Blank Analysis
Batch Quality Control

Analytical Method: 101,TO15-SIM
Analytical Date: 04/26/14 14:39

Parameter	ppbV Results	ppbV RL	ppbV MDL	ug/m3 Results	ug/m3 RL	ug/m3 MDL	Qualifier	Dilution Factor
MCP Volatile Organics in Air by SIM - Mansfield Lab for sample(s): 02 Batch: WG685355-4								
Dichlorodifluoromethane	ND	0.050	--	ND	0.247	--		1
Chloromethane	ND	0.500	--	ND	1.03	--		1
Freon-114	ND	0.050	--	ND	0.349	--		1
Vinyl chloride	ND	0.020	--	ND	0.051	--		1
1,3-Butadiene	ND	0.020	--	ND	0.044	--		1
Bromomethane	ND	0.020	--	ND	0.078	--		1
Chloroethane	ND	0.020	--	ND	0.053	--		1
Acetone	ND	1.00	--	ND	2.38	--		1
Trichlorofluoromethane	ND	0.050	--	ND	0.281	--		1
Acrylonitrile	ND	0.500	--	ND	1.09	--		1
1,1-Dichloroethene	ND	0.020	--	ND	0.079	--		1
Methylene chloride	ND	1.40	--	ND	4.86	--		1
Freon-113	ND	0.050	--	ND	0.383	--		1
Halothane	ND	0.050	--	ND	0.404	--		1
trans-1,2-Dichloroethene	ND	0.020	--	ND	0.079	--		1
1,1-Dichloroethane	ND	0.020	--	ND	0.081	--		1
Methyl tert butyl ether	ND	0.020	--	ND	0.072	--		1
2-Butanone	ND	0.200	--	ND	0.590	--		1
cis-1,2-Dichloroethene	ND	0.020	--	ND	0.079	--		1
Chloroform	ND	0.020	--	ND	0.098	--		1
1,2-Dichloroethane	ND	0.020	--	ND	0.081	--		1
1,1,1-Trichloroethane	ND	0.020	--	ND	0.109	--		1
Benzene	ND	0.100	--	ND	0.319	--		1
Carbon tetrachloride	ND	0.020	--	ND	0.126	--		1
1,2-Dichloropropane	ND	0.020	--	ND	0.092	--		1

Project Name: NHBS O&M
Project Number: 115058

Lab Number: L1408488
Report Date: 04/30/14

Method Blank Analysis
Batch Quality Control

Analytical Method: 101,TO15-SIM
Analytical Date: 04/26/14 14:39

Parameter	ppbV Results	ppbV RL	ppbV MDL	ug/m3 Results	ug/m3 RL	ug/m3 MDL	Qualifier	Dilution Factor
MCP Volatile Organics in Air by SIM - Mansfield Lab for sample(s): 02 Batch: WG685355-4								
Bromodichloromethane	ND	0.020	--	ND	0.134	--		1
1,4-Dioxane	ND	0.100	--	ND	0.360	--		1
Trichloroethene	ND	0.020	--	ND	0.107	--		1
cis-1,3-Dichloropropene	ND	0.020	--	ND	0.091	--		1
4-Methyl-2-pentanone	ND	0.200	--	ND	0.820	--		1
trans-1,3-Dichloropropene	ND	0.020	--	ND	0.091	--		1
1,1,2-Trichloroethane	ND	0.020	--	ND	0.109	--		1
Toluene	ND	0.050	--	ND	0.188	--		1
Dibromochloromethane	ND	0.020	--	ND	0.170	--		1
1,2-Dibromoethane	ND	0.020	--	ND	0.154	--		1
Tetrachloroethene	ND	0.020	--	ND	0.136	--		1
1,1,1,2-Tetrachloroethane	ND	0.020	--	ND	0.137	--		1
Chlorobenzene	ND	0.020	--	ND	0.092	--		1
Ethylbenzene	ND	0.020	--	ND	0.087	--		1
p/m-Xylene	ND	0.040	--	ND	0.174	--		1
Bromoform	ND	0.020	--	ND	0.207	--		1
Styrene	ND	0.020	--	ND	0.085	--		1
1,1,2,2-Tetrachloroethane	ND	0.020	--	ND	0.137	--		1
o-Xylene	ND	0.020	--	ND	0.087	--		1
Isopropylbenzene	ND	0.500	--	ND	2.46	--		1
1,3,5-Trimethybenzene	ND	0.020	--	ND	0.098	--		1
1,2,4-Trimethylbenzene	ND	0.020	--	ND	0.098	--		1
1,3-Dichlorobenzene	ND	0.020	--	ND	0.120	--		1
1,4-Dichlorobenzene	ND	0.020	--	ND	0.120	--		1
sec-Butylbenzene	ND	0.500	--	ND	2.74	--		1

Project Name: NHBS O&M
Project Number: 115058

Lab Number: L1408488
Report Date: 04/30/14

Method Blank Analysis
Batch Quality Control

Analytical Method: 101,TO15-SIM
Analytical Date: 04/26/14 14:39

Parameter	ppbV Results	ppbV RL	ppbV MDL	ug/m3 Results	ug/m3 RL	ug/m3 MDL	Qualifier	Dilution Factor
MCP Volatile Organics in Air by SIM - Mansfield Lab for sample(s): 02 Batch: WG685355-4								
p-Isopropyltoluene	ND	0.500	--	ND	2.74	--		1
1,2-Dichlorobenzene	ND	0.020	--	ND	0.120	--		1
n-Butylbenzene	ND	0.500	--	ND	2.74	--		1
1,2,4-Trichlorobenzene	ND	0.050	--	ND	0.371	--		1
Naphthalene	ND	0.050	--	ND	0.262	--		1
1,2,3-Trichlorobenzene	ND	0.050	--	ND	0.371	--		1
Hexachlorobutadiene	ND	0.050	--	ND	0.533	--		1

Project Name: NHBS O&M
Project Number: 115058

Lab Number: L1408488
Report Date: 04/30/14

Method Blank Analysis
Batch Quality Control

Analytical Method: 101,TO-15
Analytical Date: 04/28/14 16:17

Parameter	ppbV Results	ppbV RL	ppbV MDL	ug/m3 Results	ug/m3 RL	ug/m3 MDL	Qualifier	Dilution Factor
MCP Volatile Organics in Air - Mansfield Lab for sample(s): 01 Batch: WG685635-4								
Vinyl chloride	ND	0.200	--	ND	0.511	--		1
Bromomethane	ND	0.200	--	ND	0.777	--		1
Acetone	ND	1.00	--	ND	2.38	--		1
1,1-Dichloroethene	ND	0.200	--	ND	0.793	--		1
Methylene chloride	ND	1.40	--	ND	4.86	--		1
trans-1,2-Dichloroethene	ND	0.200	--	ND	0.793	--		1
1,1-Dichloroethane	ND	0.200	--	ND	0.809	--		1
Methyl tert butyl ether	ND	0.200	--	ND	0.721	--		1
2-Butanone	ND	0.200	--	ND	0.590	--		1
cis-1,2-Dichloroethene	ND	0.200	--	ND	0.793	--		1
Chloroform	ND	0.200	--	ND	0.977	--		1
1,2-Dichloroethane	ND	0.200	--	ND	0.809	--		1
1,1,1-Trichloroethane	ND	0.200	--	ND	1.09	--		1
Benzene	ND	0.200	--	ND	0.639	--		1
Carbon tetrachloride	ND	0.200	--	ND	1.26	--		1
1,2-Dichloropropane	ND	0.200	--	ND	0.924	--		1
Bromodichloromethane	ND	0.200	--	ND	1.34	--		1
1,4-Dioxane	ND	0.200	--	ND	0.721	--		1
Trichloroethene	ND	0.200	--	ND	1.07	--		1
cis-1,3-Dichloropropene	ND	0.200	--	ND	0.908	--		1
4-Methyl-2-pentanone	ND	0.200	--	ND	0.820	--		1
trans-1,3-Dichloropropene	ND	0.200	--	ND	0.908	--		1
1,1,2-Trichloroethane	ND	0.200	--	ND	1.09	--		1
Toluene	ND	0.200	--	ND	0.754	--		1
Dibromochloromethane	ND	0.200	--	ND	1.70	--		1

Project Name: NHBS O&M
Project Number: 115058

Lab Number: L1408488
Report Date: 04/30/14

Method Blank Analysis
Batch Quality Control

Analytical Method: 101,TO-15
Analytical Date: 04/28/14 16:17

Parameter	ppbV Results	ppbV RL	ppbV MDL	ug/m3 Results	ug/m3 RL	ug/m3 MDL	Qualifier	Dilution Factor
MCP Volatile Organics in Air - Mansfield Lab for sample(s): 01 Batch: WG685635-4								
1,2-Dibromoethane	ND	0.200	--	ND	1.54	--		1
Tetrachloroethene	ND	0.200	--	ND	1.36	--		1
Chlorobenzene	ND	0.200	--	ND	0.921	--		1
Ethylbenzene	ND	0.200	--	ND	0.869	--		1
p/m-Xylene	ND	0.400	--	ND	1.74	--		1
Bromoform	ND	0.200	--	ND	2.07	--		1
Styrene	ND	0.200	--	ND	0.852	--		1
1,1,2,2-Tetrachloroethane	ND	0.200	--	ND	1.37	--		1
o-Xylene	ND	0.200	--	ND	0.869	--		1
1,3-Dichlorobenzene	ND	0.200	--	ND	1.20	--		1
1,4-Dichlorobenzene	ND	0.200	--	ND	1.20	--		1
1,2-Dichlorobenzene	ND	0.200	--	ND	1.20	--		1
1,2,4-Trichlorobenzene	ND	0.200	--	ND	1.48	--		1
Naphthalene	ND	0.200	--	ND	1.05	--		1
Hexachlorobutadiene	ND	0.200	--	ND	2.13	--		1

Lab Control Sample Analysis
Batch Quality Control

Project Name: NHBS O&M
Project Number: 115058

Lab Number: L1408488
Report Date: 04/30/14

Parameter	LCS %Recovery	Qual	LCSD %Recovery	Qual	%Recovery Limits	RPD	Qual	RPD Limits
MCP Volatile Organics in Air by SIM - Mansfield Lab Associated sample(s): 02 Batch: WG685355-3								
Dichlorodifluoromethane	87		-		70-130	-		
Chloromethane	106		-		70-130	-		
1,2-Dichloro-1,1,2,2-tetrafluoroethane	109		-		70-130	-		
Vinyl chloride	112		-		70-130	-		
1,3-Butadiene	115		-		70-130	-		
Bromomethane	111		-		70-130	-		
Chloroethane	110		-		70-130	-		
Acetone	105		-		50-150	-		
Trichlorofluoromethane	112		-		70-130	-		
1,1-Dichloroethene	105		-		70-130	-		
Methylene chloride	100		-		70-130	-		
1,1,2-Trichloro-1,2,2-Trifluoroethane	106		-		70-130	-		
Halothane	98		-		70-130	-		
trans-1,2-Dichloroethene	95		-		70-130	-		
1,1-Dichloroethane	106		-		70-130	-		
Methyl tert butyl ether	95		-		70-130	-		
2-Butanone	91		-		70-130	-		
cis-1,2-Dichloroethene	112		-		70-130	-		
Chloroform	108		-		70-130	-		
1,2-Dichloroethane	104		-		70-130	-		
1,1,1-Trichloroethane	102		-		70-130	-		

Lab Control Sample Analysis
Batch Quality Control

Project Name: NHBS O&M
Project Number: 115058

Lab Number: L1408488
Report Date: 04/30/14

Parameter	LCS %Recovery	Qual	LCSD %Recovery	Qual	%Recovery Limits	RPD	Qual	RPD Limits
MCP Volatile Organics in Air by SIM - Mansfield Lab Associated sample(s): 02 Batch: WG685355-3								
Benzene	99		-		70-130	-		
Carbon tetrachloride	102		-		70-130	-		
1,2-Dichloropropane	102		-		70-130	-		
Bromodichloromethane	97		-		70-130	-		
1,4-Dioxane	94		-		50-150	-		
Trichloroethene	104		-		70-130	-		
cis-1,3-Dichloropropene	100		-		70-130	-		
4-Methyl-2-pentanone	101		-		70-130	-		
trans-1,3-Dichloropropene	88		-		70-130	-		
1,1,2-Trichloroethane	106		-		70-130	-		
Toluene	102		-		70-130	-		
Dibromochloromethane	92		-		70-130	-		
1,2-Dibromoethane	105		-		70-130	-		
Tetrachloroethene	105		-		70-130	-		
Chlorobenzene	107		-		70-130	-		
Ethylbenzene	104		-		70-130	-		
p/m-Xylene	107		-		70-130	-		
Bromoform	86		-		70-130	-		
Styrene	111		-		70-130	-		
1,1,2,2-Tetrachloroethane	109		-		70-130	-		
o-Xylene	106		-		70-130	-		

Lab Control Sample Analysis
Batch Quality Control

Project Name: NHBS O&M
Project Number: 115058

Lab Number: L1408488
Report Date: 04/30/14

Parameter	LCS %Recovery	Qual	LCSD %Recovery	Qual	%Recovery Limits	RPD	Qual	RPD Limits
MCP Volatile Organics in Air by SIM - Mansfield Lab Associated sample(s): 02 Batch: WG685355-3								
1,3,5-Trimethylbenzene	107		-		70-130	-		
1,2,4-Trimethylbenzene	111		-		70-130	-		
1,3-Dichlorobenzene	116		-		70-130	-		
1,4-Dichlorobenzene	112		-		70-130	-		
1,2-Dichlorobenzene	113		-		70-130	-		
1,2,4-Trichlorobenzene	124		-		50-150	-		
Naphthalene	114		-		50-150	-		
1,2,3-Trichlorobenzene	113		-		70-130	-		
Hexachlorobutadiene	122		-		50-150	-		

Lab Control Sample Analysis
Batch Quality Control

Project Name: NHBS O&M
Project Number: 115058

Lab Number: L1408488
Report Date: 04/30/14

Parameter	LCS %Recovery	Qual	LCSD %Recovery	Qual	%Recovery Limits	RPD	Qual	RPD Limits
MCP Volatile Organics in Air - Mansfield Lab Associated sample(s): 01 Batch: WG685635-3								
Vinyl chloride	116		-		70-130	-		
Bromomethane	111		-		70-130	-		
Acetone	108		-		50-150	-		
1,1-Dichloroethene	106		-		70-130	-		
Methylene chloride	99		-		70-130	-		
trans-1,2-Dichloroethene	94		-		70-130	-		
1,1-Dichloroethane	104		-		70-130	-		
Methyl tert butyl ether	92		-		70-130	-		
2-Butanone	91		-		70-130	-		
cis-1,2-Dichloroethene	118		-		70-130	-		
Chloroform	110		-		70-130	-		
1,2-Dichloroethane	109		-		70-130	-		
1,1,1-Trichloroethane	106		-		70-130	-		
Benzene	101		-		70-130	-		
Carbon tetrachloride	106		-		70-130	-		
1,2-Dichloropropane	107		-		70-130	-		
Bromodichloromethane	101		-		70-130	-		
1,4-Dioxane	100		-		50-150	-		
Trichloroethene	112		-		70-130	-		
cis-1,3-Dichloropropene	107		-		70-130	-		
4-Methyl-2-pentanone	98		-		70-130	-		

Lab Control Sample Analysis
Batch Quality Control

Project Name: NHBS O&M
Project Number: 115058

Lab Number: L1408488
Report Date: 04/30/14

Parameter	LCS %Recovery	Qual	LCSD %Recovery	Qual	%Recovery Limits	RPD	Qual	RPD Limits
MCP Volatile Organics in Air - Mansfield Lab Associated sample(s): 01 Batch: WG685635-3								
trans-1,3-Dichloropropene	91		-		70-130	-		
1,1,2-Trichloroethane	110		-		70-130	-		
Toluene	101		-		70-130	-		
Dibromochloromethane	95		-		70-130	-		
1,2-Dibromoethane	104		-		70-130	-		
Tetrachloroethene	107		-		70-130	-		
Chlorobenzene	109		-		70-130	-		
Ethylbenzene	103		-		70-130	-		
p/m-Xylene	104		-		70-130	-		
Bromoform	90		-		70-130	-		
Styrene	104		-		70-130	-		
1,1,2,2-Tetrachloroethane	110		-		70-130	-		
o-Xylene	108		-		70-130	-		
1,3-Dichlorobenzene	112		-		70-130	-		
1,4-Dichlorobenzene	112		-		70-130	-		
1,2-Dichlorobenzene	111		-		70-130	-		
1,2,4-Trichlorobenzene	121		-		50-150	-		
Naphthalene	108		-		50-150	-		
Hexachlorobutadiene	125		-		50-150	-		

Lab Duplicate Analysis
Batch Quality Control

Project Name: NHBS O&M
Project Number: 115058

Lab Number: L1408488
Report Date: 04/30/14

Parameter	Native Sample	Duplicate Sample	Units	RPD	Qual	RPD Limits
MCP Volatile Organics in Air by SIM - Mansfield Lab Associated sample(s): 02 QC Batch ID: WG685355-5 QC Sample: L1408488-02 Client ID: VAPOR OUTLET						
Vinyl chloride	2.84	2.56	ppbV	10		25
Bromomethane	ND	ND	ppbV	NC		25
Acetone	1.91	1.54	ppbV	21		25
1,1-Dichloroethene	ND	ND	ppbV	NC		25
Methylene chloride	ND	ND	ppbV	NC		25
trans-1,2-Dichloroethene	3.28	2.96	ppbV	10		25
1,1-Dichloroethane	ND	ND	ppbV	NC		25
Methyl tert butyl ether	ND	ND	ppbV	NC		25
2-Butanone	0.241	0.216	ppbV	11		25
cis-1,2-Dichloroethene	9.01	8.23	ppbV	9		25
Chloroform	0.173	0.171	ppbV	1		25
1,2-Dichloroethane	ND	ND	ppbV	NC		25
1,1,1-Trichloroethane	ND	ND	ppbV	NC		25
Benzene	0.515	0.542	ppbV	5		25
Carbon tetrachloride	ND	ND	ppbV	NC		25
1,2-Dichloropropane	ND	ND	ppbV	NC		25
Bromodichloromethane	ND	ND	ppbV	NC		25
1,4-Dioxane	ND	ND	ppbV	NC		25
Trichloroethene	ND	ND	ppbV	NC		25

Lab Duplicate Analysis
Batch Quality Control

Project Name: NHBS O&M
Project Number: 115058

Lab Number: L1408488
Report Date: 04/30/14

Parameter	Native Sample	Duplicate Sample	Units	RPD	RPD Limits
MCP Volatile Organics in Air by SIM - Mansfield Lab Associated sample(s): 02 QC Batch ID: WG685355-5 QC Sample: L1408488-02 Client ID: VAPOR OUTLET					
cis-1,3-Dichloropropene	ND	ND	ppbV	NC	25
4-Methyl-2-pentanone	ND	ND	ppbV	NC	25
trans-1,3-Dichloropropene	ND	ND	ppbV	NC	25
1,1,2-Trichloroethane	ND	ND	ppbV	NC	25
Toluene	0.554	0.516	ppbV	7	25
Dibromochloromethane	ND	ND	ppbV	NC	25
1,2-Dibromoethane	ND	ND	ppbV	NC	25
Tetrachloroethene	0.021	ND	ppbV	NC	25
Chlorobenzene	0.055	0.051	ppbV	8	25
Ethylbenzene	0.083	0.080	ppbV	4	25
p/m-Xylene	0.304	0.284	ppbV	7	25
Bromoform	ND	ND	ppbV	NC	25
Styrene	ND	ND	ppbV	NC	25
1,1,2,2-Tetrachloroethane	ND	ND	ppbV	NC	25
o-Xylene	0.098	0.092	ppbV	6	25
1,3-Dichlorobenzene	ND	ND	ppbV	NC	25
1,4-Dichlorobenzene	0.043	0.040	ppbV	7	25
1,2-Dichlorobenzene	0.741	0.696	ppbV	6	25
1,2,4-Trichlorobenzene	ND	ND	ppbV	NC	25

Lab Duplicate Analysis
Batch Quality Control

Project Name: NHBS O&M
Project Number: 115058

Lab Number: L1408488
Report Date: 04/30/14

Parameter	Native Sample	Duplicate Sample	Units	RPD	RPD Limits
MCP Volatile Organics in Air by SIM - Mansfield Lab Associated sample(s): 02 QC Batch ID: WG685355-5 QC Sample: L1408488-02 Client ID: VAPOR OUTLET					
Naphthalene	ND	ND	ppbV	NC	25
Hexachlorobutadiene	ND	ND	ppbV	NC	25

Lab Duplicate Analysis
Batch Quality Control

Project Name: NHBS O&M
Project Number: 115058

Lab Number: L1408488
Report Date: 04/30/14

Parameter	Native Sample	Duplicate Sample	Units	RPD	RPD Limits
MCP Volatile Organics in Air - Mansfield Lab Associated sample(s): 01 QC Batch ID: WG685635-5 QC Sample: L1408849-01 Client ID: DUP Sample					
Vinyl chloride	ND	ND	ppbV	NC	25
Bromomethane	ND	ND	ppbV	NC	25
Acetone	3.73	4.00	ppbV	7	25
1,1-Dichloroethene	ND	ND	ppbV	NC	25
Methylene chloride	ND	ND	ppbV	NC	25
trans-1,2-Dichloroethene	ND	ND	ppbV	NC	25
1,1-Dichloroethane	ND	ND	ppbV	NC	25
Methyl tert butyl ether	ND	ND	ppbV	NC	25
2-Butanone	0.568	0.601	ppbV	6	25
cis-1,2-Dichloroethene	ND	ND	ppbV	NC	25
Chloroform	ND	ND	ppbV	NC	25
1,2-Dichloroethane	ND	ND	ppbV	NC	25
1,1,1-Trichloroethane	ND	ND	ppbV	NC	25
Benzene	0.516	0.572	ppbV	10	25
Carbon tetrachloride	ND	ND	ppbV	NC	25
1,2-Dichloropropane	ND	ND	ppbV	NC	25
Bromodichloromethane	ND	ND	ppbV	NC	25
1,4-Dioxane	ND	ND	ppbV	NC	25
Trichloroethene	ND	ND	ppbV	NC	25

Lab Duplicate Analysis
Batch Quality Control

Project Name: NHBS O&M
Project Number: 115058

Lab Number: L1408488
Report Date: 04/30/14

Parameter	Native Sample	Duplicate Sample	Units	RPD	RPD Limits
MCP Volatile Organics in Air - Mansfield Lab Associated sample(s): 01 QC Batch ID: WG685635-5 QC Sample: L1408849-01 Client ID: DUP Sample					
cis-1,3-Dichloropropene	ND	ND	ppbV	NC	25
4-Methyl-2-pentanone	ND	ND	ppbV	NC	25
trans-1,3-Dichloropropene	ND	ND	ppbV	NC	25
1,1,2-Trichloroethane	ND	ND	ppbV	NC	25
Toluene	1.50	1.50	ppbV	0	25
Dibromochloromethane	ND	ND	ppbV	NC	25
1,2-Dibromoethane	ND	ND	ppbV	NC	25
Tetrachloroethene	ND	ND	ppbV	NC	25
Chlorobenzene	ND	ND	ppbV	NC	25
Ethylbenzene	ND	ND	ppbV	NC	25
p/m-Xylene	ND	ND	ppbV	NC	25
Bromoform	ND	ND	ppbV	NC	25
Styrene	ND	ND	ppbV	NC	25
1,1,2,2-Tetrachloroethane	ND	ND	ppbV	NC	25
o-Xylene	ND	ND	ppbV	NC	25
1,3-Dichlorobenzene	ND	ND	ppbV	NC	25
1,4-Dichlorobenzene	ND	ND	ppbV	NC	25
1,2-Dichlorobenzene	ND	ND	ppbV	NC	25
1,2,4-Trichlorobenzene	ND	ND	ppbV	NC	25

Lab Duplicate Analysis
Batch Quality Control

Project Name: NHBS O&M
Project Number: 115058

Lab Number: L1408488
Report Date: 04/30/14

Parameter	Native Sample	Duplicate Sample	Units	RPD	RPD Limits
MCP Volatile Organics in Air - Mansfield Lab Associated sample(s): 01 QC Batch ID: WG685635-5 QC Sample: L1408849-01 Client ID: DUP Sample					
Naphthalene	1.34	1.32	ppbV	2	25
Hexachlorobutadiene	ND	ND	ppbV	NC	25

Project Name: NHBS O&M

Lab Number: L1408488

Project Number: 115058

Report Date: 04/30/14

Canister and Flow Controller Information

Samplenum	Client ID	Media ID	Media Type	Date Prepared	Bottle Order	Cleaning Batch ID	Can Leak Check	Initial Pressure (in. Hg)	Pressure on Receipt (in. Hg)	Flow Controler Leak Chk	Flow Out mL/min	Flow In mL/min	% RPD
L1408488-01	VAPOR INLET	0511	SV200	04/18/14	101468		-	-	-	Pass	220	214	3
L1408488-01	VAPOR INLET	1066	2.7L Can	04/18/14	101468	L1407143-02	Pass	-29.9	-0.1	-	-	-	-
L1408488-02	VAPOR OUTLET	0602	SV200	04/18/14	101468		-	-	-	Pass	220	214	3
L1408488-02	VAPOR OUTLET	261	2.7L Can	04/18/14	101468	L1407143-02	Pass	-30.0	-1.0	-	-	-	-

Project Name: BATCH CANISTER CERTIFICATION **Lab Number:** L1407143

Project Number: CANISTER QC BAT **Report Date:** 04/30/14

Air Canister Certification Results

Lab ID:	L1407143-02	Date Collected:	04/04/14 16:29
Client ID:	CAN 320 SHELF 11	Date Received:	04/05/14
Sample Location:		Field Prep:	Not Specified
Matrix:	Air		
Anaytical Method:	48,TO-15		
Analytical Date:	04/07/14 21:33		
Analyst:	MB		

	ppbV			ug/m3				
Parameter	**Results**	**RL**	**MDL**	**Results**	**RL**	**MDL**	**Qualifier**	**Dilution Factor**
Volatile Organics in Air - Mansfield Lab								
Chlorodifluoromethane	ND	0.200	--	ND	0.707	--		1
Propylene	ND	0.500	--	ND	0.861	--		1
Propane	ND	0.500	--	ND	0.902	--		1
Dichlorodifluoromethane	ND	0.200	--	ND	0.989	--		1
Chloromethane	ND	0.200	--	ND	0.413	--		1
Freon-114	ND	0.200	--	ND	1.40	--		1
Methanol	ND	5.00	--	ND	6.55	--		1
Vinyl chloride	ND	0.200	--	ND	0.511	--		1
1,3-Butadiene	ND	0.200	--	ND	0.442	--		1
Butane	ND	0.200	--	ND	0.475	--		1
Bromomethane	ND	0.200	--	ND	0.777	--		1
Chloroethane	ND	0.200	--	ND	0.528	--		1
Ethanol	ND	2.50	--	ND	4.71	--		1
Dichlorofluoromethane	ND	0.200	--	ND	0.842	--		1
Vinyl bromide	ND	0.200	--	ND	0.874	--		1
Acrolein	ND	0.500	--	ND	1.15	--		1
Acetone	ND	1.00	--	ND	2.38	--		1
Acetonitrile	ND	0.200	--	ND	0.336	--		1
Trichlorofluoromethane	ND	0.200	--	ND	1.12	--		1
Isopropanol	ND	0.500	--	ND	1.23	--		1
Acrylonitrile	ND	0.200	--	ND	0.434	--		1
Pentane	ND	0.200	--	ND	0.590	--		1
Ethyl ether	ND	0.200	--	ND	0.606	--		1
1,1-Dichloroethene	ND	0.200	--	ND	0.793	--		1
Tertiary butyl Alcohol	ND	0.500	--	ND	1.52	--		1

Project Name: BATCH CANISTER CERTIFICATION **Lab Number:** L1407143

Project Number: CANISTER QC BAT **Report Date:** 04/30/14

Air Canister Certification Results

Lab ID: L1407143-02 Date Collected: 04/04/14 16:29

Client ID: CAN 320 SHELF 11 Date Received: 04/05/14

Sample Location: Field Prep: Not Specified

	ppbV			ug/m3				
Parameter	**Results**	**RL**	**MDL**	**Results**	**RL**	**MDL**	**Qualifier**	**Dilution Factor**
Volatile Organics in Air - Mansfield Lab								
Methylene chloride	ND	1.00	--	ND	3.47	--		1
3-Chloropropene	ND	0.200	--	ND	0.626	--		1
Carbon disulfide	ND	0.200	--	ND	0.623	--		1
Freon-113	ND	0.200	--	ND	1.53	--		1
trans-1,2-Dichloroethene	ND	0.200	--	ND	0.793	--		1
1,1-Dichloroethane	ND	0.200	--	ND	0.809	--		1
Methyl tert butyl ether	ND	0.200	--	ND	0.721	--		1
Vinyl acetate	ND	0.200	--	ND	0.704	--		1
2-Butanone	ND	0.200	--	ND	0.590	--		1
cis-1,2-Dichloroethene	ND	0.200	--	ND	0.793	--		1
Ethyl Acetate	ND	0.500	--	ND	1.80	--		1
Chloroform	ND	0.200	--	ND	0.977	--		1
Tetrahydrofuran	ND	0.200	--	ND	0.590	--		1
2,2-Dichloropropane	ND	0.200	--	ND	0.924	--		1
1,2-Dichloroethane	ND	0.200	--	ND	0.809	--		1
n-Hexane	ND	0.200	--	ND	0.705	--		1
Diisopropyl ether	ND	0.200	--	ND	0.836	--		1
tert-Butyl Ethyl Ether	ND	0.200	--	ND	0.836	--		1
1,1,1-Trichloroethane	ND	0.200	--	ND	1.09	--		1
1,1-Dichloropropene	ND	0.200	--	ND	0.908	--		1
Benzene	ND	0.200	--	ND	0.639	--		1
Carbon tetrachloride	ND	0.200	--	ND	1.26	--		1
Cyclohexane	ND	0.200	--	ND	0.688	--		1
tert-Amyl Methyl Ether	ND	0.200	--	ND	0.836	--		1
Dibromomethane	ND	0.200	--	ND	1.42	--		1
1,2-Dichloropropane	ND	0.200	--	ND	0.924	--		1
Bromodichloromethane	ND	0.200	--	ND	1.34	--		1
1,4-Dioxane	ND	0.200	--	ND	0.721	--		1

Project Name: BATCH CANISTER CERTIFICATION **Lab Number:** L1407143

Project Number: CANISTER QC BAT **Report Date:** 04/30/14

Air Canister Certification Results

Lab ID: L1407143-02 Date Collected: 04/04/14 16:29

Client ID: CAN 320 SHELF 11 Date Received: 04/05/14

Sample Location: Field Prep: Not Specified

	ppbV			ug/m3				
Parameter	**Results**	**RL**	**MDL**	**Results**	**RL**	**MDL**	**Qualifier**	**Dilution Factor**
Volatile Organics in Air - Mansfield Lab								
Trichloroethene	ND	0.200	--	ND	1.07	--		1
2,2,4-Trimethylpentane	ND	0.200	--	ND	0.934	--		1
Methyl Methacrylate	ND	0.500	--	ND	2.05	--		1
Heptane	ND	0.200	--	ND	0.820	--		1
cis-1,3-Dichloropropene	ND	0.200	--	ND	0.908	--		1
4-Methyl-2-pentanone	ND	0.200	--	ND	0.820	--		1
trans-1,3-Dichloropropene	ND	0.200	--	ND	0.908	--		1
1,1,2-Trichloroethane	ND	0.200	--	ND	1.09	--		1
Toluene	ND	0.200	--	ND	0.754	--		1
1,3-Dichloropropane	ND	0.200	--	ND	0.924	--		1
2-Hexanone	ND	0.200	--	ND	0.820	--		1
Dibromochloromethane	ND	0.200	--	ND	1.70	--		1
1,2-Dibromoethane	ND	0.200	--	ND	1.54	--		1
Butyl acetate	ND	0.500	--	ND	2.38	--		1
Octane	ND	0.200	--	ND	0.934	--		1
Tetrachloroethene	ND	0.200	--	ND	1.36	--		1
1,1,1,2-Tetrachloroethane	ND	0.200	--	ND	1.37	--		1
Chlorobenzene	ND	0.200	--	ND	0.921	--		1
Ethylbenzene	ND	0.200	--	ND	0.869	--		1
p/m-Xylene	ND	0.400	--	ND	1.74	--		1
Bromoform	ND	0.200	--	ND	2.07	--		1
Styrene	ND	0.200	--	ND	0.852	--		1
1,1,2,2-Tetrachloroethane	ND	0.200	--	ND	1.37	--		1
o-Xylene	ND	0.200	--	ND	0.869	--		1
1,2,3-Trichloropropane	ND	0.200	--	ND	1.21	--		1
Nonane	ND	0.200	--	ND	1.05	--		1
Isopropylbenzene	ND	0.200	--	ND	0.983	--		1
Bromobenzene	ND	0.200	--	ND	0.793	--		1

Project Name: BATCH CANISTER CERTIFICATION **Lab Number:** L1407143

Project Number: CANISTER QC BAT **Report Date:** 04/30/14

Air Canister Certification Results

Lab ID: L1407143-02 Date Collected: 04/04/14 16:29

Client ID: CAN 320 SHELF 11 Date Received: 04/05/14

Sample Location: Field Prep: Not Specified

Parameter	ppbV Results	ppbV RL	ppbV MDL	ug/m3 Results	ug/m3 RL	ug/m3 MDL	Qualifier	Dilution Factor
Volatile Organics in Air - Mansfield Lab								
2-Chlorotoluene	ND	0.200	--	ND	1.04	--		1
n-Propylbenzene	ND	0.200	--	ND	0.983	--		1
4-Chlorotoluene	ND	0.200	--	ND	1.04	--		1
4-Ethyltoluene	ND	0.200	--	ND	0.983	--		1
1,3,5-Trimethylbenzene	ND	0.200	--	ND	0.983	--		1
tert-Butylbenzene	ND	0.200	--	ND	1.10	--		1
1,2,4-Trimethylbenzene	ND	0.200	--	ND	0.983	--		1
Decane	ND	0.200	--	ND	1.16	--		1
Benzyl chloride	ND	0.200	--	ND	1.04	--		1
1,3-Dichlorobenzene	ND	0.200	--	ND	1.20	--		1
1,4-Dichlorobenzene	ND	0.200	--	ND	1.20	--		1
sec-Butylbenzene	ND	0.200	--	ND	1.10	--		1
p-Isopropyltoluene	ND	0.200	--	ND	1.10	--		1
1,2-Dichlorobenzene	ND	0.200	--	ND	1.20	--		1
n-Butylbenzene	ND	0.200	--	ND	1.10	--		1
1,2-Dibromo-3-chloropropane	ND	0.200	--	ND	1.93	--		1
Undecane	ND	0.200	--	ND	1.28	--		1
Dodecane	ND	0.200	--	ND	1.39	--		1
1,2,4-Trichlorobenzene	ND	0.200	--	ND	1.48	--		1
Naphthalene	ND	0.200	--	ND	1.05	--		1
1,2,3-Trichlorobenzene	ND	0.200	--	ND	1.48	--		1
Hexachlorobutadiene	ND	0.200	--	ND	2.13	--		1

	Results	Qualifier	Units	RDL	Dilution Factor
Tentatively Identified Compounds					
No Tentatively Identified Compounds					

Project Name: BATCH CANISTER CERTIFICATION **Lab Number:** L1407143

Project Number: CANISTER QC BAT **Report Date:** 04/30/14

Air Canister Certification Results

Lab ID: L1407143-02 Date Collected: 04/04/14 16:29

Client ID: CAN 320 SHELF 11 Date Received: 04/05/14

Sample Location: Field Prep: Not Specified

Parameter	ppbV Results	ppbV RL	ppbV MDL	ug/m3 Results	ug/m3 RL	ug/m3 MDL	Qualifier	Dilution Factor
Volatile Organics in Air - Mansfield Lab								

Internal Standard	% Recovery	Qualifier	Acceptance Criteria
1,4-Difluorobenzene	89		60-140
Bromochloromethane	107		60-140
chlorobenzene-d5	90		60-140

Project Name: BATCH CANISTER CERTIFICATION **Lab Number:** L1407143

Project Number: CANISTER QC BAT **Report Date:** 04/30/14

Air Canister Certification Results

Lab ID:	L1407143-02	Date Collected:	04/04/14 16:29
Client ID:	CAN 320 SHELF 11	Date Received:	04/05/14
Sample Location:		Field Prep:	Not Specified
Matrix:	Air		
Anaytical Method:	48,TO-15		
Analytical Date:	04/08/14 09:50		
Analyst:	MB		

	ppbV			ug/m3				
Parameter	**Results**	**RL**	**MDL**	**Results**	**RL**	**MDL**	**Qualifier**	**Dilution Factor**
Volatile Organics in Air - Mansfield Lab								
Dichlorodifluoromethane	ND	0.200	--	ND	0.989	--		1
Chloromethane	ND	0.200	--	ND	0.413	--		1
Freon-114	ND	0.200	--	ND	1.40	--		1
Vinyl chloride	ND	0.200	--	ND	0.511	--		1
1,3-Butadiene	ND	0.200	--	ND	0.442	--		1
Butane	ND	0.200	--	ND	0.475	--		1
Acetaldehyde	ND	2.50	--	ND	4.50	--		1
Bromomethane	ND	0.200	--	ND	0.777	--		1
Chloroethane	ND	0.200	--	ND	0.528	--		1
Ethanol	ND	1.00	--	ND	1.88	--		1
Vinyl bromide	ND	0.200	--	ND	0.874	--		1
Acrolein	ND	0.500	--	ND	1.15	--		1
Acetone	ND	1.00	--	ND	2.38	--		1
Trichlorofluoromethane	ND	0.200	--	ND	1.12	--		1
Isopropanol	ND	0.500	--	ND	1.23	--		1
Pentane	ND	0.200	--	ND	0.590	--		1
1,1-Dichloroethene	ND	0.200	--	ND	0.793	--		1
tert-Butyl Alcohol	ND	0.200	--	ND	0.606	--		1
Methylene chloride	ND	1.00	--	ND	3.47	--		1
3-Chloropropene	ND	0.200	--	ND	0.626	--		1
Carbon disulfide	ND	0.200	--	ND	0.623	--		1
Freon-113	ND	0.200	--	ND	1.53	--		1
trans-1,2-Dichloroethene	ND	0.200	--	ND	0.793	--		1
1,1-Dichloroethane	ND	0.200	--	ND	0.809	--		1
Methyl tert butyl ether	ND	0.200	--	ND	0.721	--		1

Project Name: BATCH CANISTER CERTIFICATION **Lab Number:** L1407143

Project Number: CANISTER QC BAT **Report Date:** 04/30/14

Air Canister Certification Results

Lab ID: L1407143-02 Date Collected: 04/04/14 16:29

Client ID: CAN 320 SHELF 11 Date Received: 04/05/14

Sample Location: Field Prep: Not Specified

Parameter	ppbV Results	ppbV RL	ppbV MDL	ug/m3 Results	ug/m3 RL	ug/m3 MDL	Qualifier	Dilution Factor
Volatile Organics in Air - Mansfield Lab								
2-Butanone	ND	0.200	--	ND	0.590	--		1
cis-1,2-Dichloroethene	ND	0.200	--	ND	0.793	--		1
Chloroform	ND	0.200	--	ND	0.977	--		1
1,2-Dichloroethane	ND	0.200	--	ND	0.809	--		1
n-Hexane	ND	0.200	--	ND	0.705	--		1
1,1,1-Trichloroethane	ND	0.200	--	ND	1.09	--		1
Benzene	ND	0.200	--	ND	0.639	--		1
Thiophene	ND	0.200	--	ND	0.688	--		1
Carbon tetrachloride	ND	0.200	--	ND	1.26	--		1
Cyclohexane	ND	0.200	--	ND	0.688	--		1
1,2-Dichloropropane	ND	0.200	--	ND	0.924	--		1
Bromodichloromethane	ND	0.200	--	ND	1.34	--		1
1,4-Dioxane	ND	0.200	--	ND	0.721	--		1
Trichloroethene	ND	0.200	--	ND	1.07	--		1
2,2,4-Trimethylpentane	ND	0.200	--	ND	0.934	--		1
Heptane	ND	0.200	--	ND	0.820	--		1
cis-1,3-Dichloropropene	ND	0.200	--	ND	0.908	--		1
4-Methyl-2-pentanone	ND	0.200	--	ND	0.820	--		1
trans-1,3-Dichloropropene	ND	0.200	--	ND	0.908	--		1
1,1,2-Trichloroethane	ND	0.200	--	ND	1.09	--		1
Toluene	ND	0.200	--	ND	0.754	--		1
2-Methylthiophene	ND	0.200	--	ND	0.803	--		1
2-Hexanone	ND	0.200	--	ND	0.820	--		1
3-Methylthiophene	ND	0.200	--	ND	0.803	--		1
Dibromochloromethane	ND	0.200	--	ND	1.70	--		1
1,2-Dibromoethane	ND	0.200	--	ND	1.54	--		1
Octane	ND	0.200	--	ND	0.934	--		1
Tetrachloroethene	ND	0.200	--	ND	1.36	--		1

Project Name: BATCH CANISTER CERTIFICATION **Lab Number:** L1407143

Project Number: CANISTER QC BAT **Report Date:** 04/30/14

Air Canister Certification Results

Lab ID: L1407143-02 Date Collected: 04/04/14 16:29

Client ID: CAN 320 SHELF 11 Date Received: 04/05/14

Sample Location: Field Prep: Not Specified

Parameter	ppbV Results	ppbV RL	ppbV MDL	ug/m3 Results	ug/m3 RL	ug/m3 MDL	Qualifier	Dilution Factor
Volatile Organics in Air - Mansfield Lab								
Chlorobenzene	ND	0.200	--	ND	0.921	--		1
Ethylbenzene	ND	0.200	--	ND	0.869	--		1
2-Ethylthiophene	ND	0.200	--	ND	0.918	--		1
p/m-Xylene	ND	0.400	--	ND	1.74	--		1
Bromoform	ND	0.200	--	ND	2.07	--		1
Styrene	ND	0.200	--	ND	0.852	--		1
1,1,2,2-Tetrachloroethane	ND	0.200	--	ND	1.37	--		1
o-Xylene	ND	0.200	--	ND	0.869	--		1
Nonane	ND	0.200	--	ND	1.05	--		1
2-Chlorotoluene	ND	0.200	--	ND	1.04	--		1
4-Ethyltoluene	ND	0.200	--	ND	0.983	--		1
1,3,5-Trimethybenzene	ND	0.200	--	ND	0.983	--		1
1,2,4-Trimethylbenzene	ND	0.200	--	ND	0.983	--		1
Decane	ND	0.200	--	ND	1.16	--		1
1,3-Dichlorobenzene	ND	0.200	--	ND	1.20	--		1
1,4-Dichlorobenzene	ND	0.200	--	ND	1.20	--		1
1,2,3-Trimethylbenzene	ND	0.200	--	ND	0.983	--		1
1,2-Dichlorobenzene	ND	0.200	--	ND	1.20	--		1
Indane	ND	0.200	--	ND	0.967	--		1
Indene	ND	0.200	--	ND	0.951	--		1
Undecane	ND	0.200	--	ND	1.28	--		1
1,2,4,5-Tetramethylbenzene	ND	0.500	--	ND	2.74	--		1
Dodecane	ND	0.500	--	ND	3.48	--		1
1,2,4-Trichlorobenzene	ND	0.200	--	ND	1.48	--		1
Naphthalene	ND	0.200	--	ND	1.05	--		1
Benzothiophene	ND	0.500	--	ND	2.74	--		1
Hexachlorobutadiene	ND	0.200	--	ND	2.13	--		1
2-Methylnaphthalene	ND	1.00	--	ND	5.82	--		1

Project Name: BATCH CANISTER CERTIFICATION **Lab Number:** L1407143

Project Number: CANISTER QC BAT **Report Date:** 04/30/14

Air Canister Certification Results

Lab ID: L1407143-02 Date Collected: 04/04/14 16:29

Client ID: CAN 320 SHELF 11 Date Received: 04/05/14

Sample Location: Field Prep: Not Specified

Parameter	ppbV Results	ppbV RL	ppbV MDL	ug/m3 Results	ug/m3 RL	ug/m3 MDL	Qualifier	Dilution Factor
Volatile Organics in Air - Mansfield Lab								
1-Methylnaphthalene	ND	1.00	--	ND	5.82	--		1

Internal Standard	% Recovery	Qualifier	Acceptance Criteria
1,4-Difluorobenzene	96		60-140
Bromochloromethane	93		60-140
chlorobenzene-d5	96		60-140

Project Name: BATCH CANISTER CERTIFICATION **Lab Number:** L1407143

Project Number: CANISTER QC BAT **Report Date:** 04/30/14

Air Canister Certification Results

Lab ID:	L1407143-02	Date Collected:	04/04/14 16:29
Client ID:	CAN 320 SHELF 11	Date Received:	04/05/14
Sample Location:		Field Prep:	Not Specified
Matrix:	Air		
Anaytical Method:	48,TO-15-SIM		
Analytical Date:	04/07/14 21:33		
Analyst:	MB		

	ppbV			ug/m3				
Parameter	**Results**	**RL**	**MDL**	**Results**	**RL**	**MDL**	**Qualifier**	**Dilution Factor**
Volatile Organics in Air by SIM - Mansfield Lab								
Dichlorodifluoromethane	ND	0.050	--	ND	0.247	--		1
Chloromethane	ND	0.500	--	ND	1.03	--		1
Freon-114	ND	0.050	--	ND	0.349	--		1
Vinyl chloride	ND	0.020	--	ND	0.051	--		1
1,3-Butadiene	ND	0.020	--	ND	0.044	--		1
Bromomethane	ND	0.020	--	ND	0.078	--		1
Chloroethane	ND	0.020	--	ND	0.053	--		1
Acetone	ND	2.00	--	ND	4.75	--		1
Trichlorofluoromethane	ND	0.050	--	ND	0.281	--		1
Acrylonitrile	ND	0.500	--	ND	1.09	--		1
1,1-Dichloroethene	ND	0.020	--	ND	0.079	--		1
Methylene chloride	ND	1.00	--	ND	3.47	--		1
Freon-113	ND	0.050	--	ND	0.383	--		1
Halothane	ND	0.050	--	ND	0.404	--		1
trans-1,2-Dichloroethene	ND	0.020	--	ND	0.079	--		1
1,1-Dichloroethane	ND	0.020	--	ND	0.081	--		1
Methyl tert butyl ether	ND	0.020	--	ND	0.072	--		1
2-Butanone	ND	0.500	--	ND	1.47	--		1
cis-1,2-Dichloroethene	ND	0.020	--	ND	0.079	--		1
Chloroform	ND	0.020	--	ND	0.098	--		1
1,2-Dichloroethane	ND	0.020	--	ND	0.081	--		1
1,1,1-Trichloroethane	ND	0.020	--	ND	0.109	--		1
Benzene	ND	0.100	--	ND	0.319	--		1
Carbon tetrachloride	ND	0.020	--	ND	0.126	--		1
1,2-Dichloropropane	ND	0.020	--	ND	0.092	--		1

Project Name: BATCH CANISTER CERTIFICATION **Lab Number:** L1407143

Project Number: CANISTER QC BAT **Report Date:** 04/30/14

Air Canister Certification Results

Lab ID: L1407143-02 Date Collected: 04/04/14 16:29

Client ID: CAN 320 SHELF 11 Date Received: 04/05/14

Sample Location: Field Prep: Not Specified

	ppbV			ug/m3				
Parameter	**Results**	**RL**	**MDL**	**Results**	**RL**	**MDL**	**Qualifier**	**Dilution Factor**
Volatile Organics in Air by SIM - Mansfield Lab								
Bromodichloromethane	ND	0.020	--	ND	0.134	--		1
1,4-Dioxane	ND	0.100	--	ND	0.360	--		1
Trichloroethene	ND	0.020	--	ND	0.107	--		1
cis-1,3-Dichloropropene	ND	0.020	--	ND	0.091	--		1
4-Methyl-2-pentanone	ND	0.500	--	ND	2.05	--		1
trans-1,3-Dichloropropene	ND	0.020	--	ND	0.091	--		1
1,1,2-Trichloroethane	ND	0.020	--	ND	0.109	--		1
Toluene	ND	0.050	--	ND	0.188	--		1
Dibromochloromethane	ND	0.020	--	ND	0.170	--		1
1,2-Dibromoethane	ND	0.020	--	ND	0.154	--		1
Tetrachloroethene	ND	0.020	--	ND	0.136	--		1
1,1,1,2-Tetrachloroethane	ND	0.020	--	ND	0.137	--		1
Chlorobenzene	ND	0.020	--	ND	0.092	--		1
Ethylbenzene	ND	0.020	--	ND	0.087	--		1
p/m-Xylene	ND	0.040	--	ND	0.174	--		1
Bromoform	ND	0.020	--	ND	0.207	--		1
Styrene	ND	0.020	--	ND	0.085	--		1
1,1,2,2-Tetrachloroethane	ND	0.020	--	ND	0.137	--		1
o-Xylene	ND	0.020	--	ND	0.087	--		1
Isopropylbenzene	ND	0.500	--	ND	2.46	--		1
4-Ethyltoluene	ND	0.020	--	ND	0.098	--		1
1,3,5-Trimethybenzene	ND	0.020	--	ND	0.098	--		1
1,2,4-Trimethylbenzene	ND	0.020	--	ND	0.098	--		1
1,3-Dichlorobenzene	ND	0.020	--	ND	0.120	--		1
1,4-Dichlorobenzene	ND	0.020	--	ND	0.120	--		1
sec-Butylbenzene	ND	0.500	--	ND	2.74	--		1
p-Isopropyltoluene	ND	0.500	--	ND	2.74	--		1
1,2-Dichlorobenzene	ND	0.020	--	ND	0.120	--		1

Project Name: BATCH CANISTER CERTIFICATION **Lab Number:** L1407143

Project Number: CANISTER QC BAT **Report Date:** 04/30/14

Air Canister Certification Results

Lab ID: L1407143-02 Date Collected: 04/04/14 16:29

Client ID: CAN 320 SHELF 11 Date Received: 04/05/14

Sample Location: Field Prep: Not Specified

	ppbV			ug/m3				
Parameter	**Results**	**RL**	**MDL**	**Results**	**RL**	**MDL**	**Qualifier**	**Dilution Factor**
Volatile Organics in Air by SIM - Mansfield Lab								
n-Butylbenzene	ND	0.500	--	ND	2.74	--		1
1,2,4-Trichlorobenzene	ND	0.050	--	ND	0.371	--		1
Naphthalene	ND	0.050	--	ND	0.262	--		1
1,2,3-Trichlorobenzene	ND	0.050	--	ND	0.371	--		1
Hexachlorobutadiene	ND	0.050	--	ND	0.533	--		1

Internal Standard	**% Recovery**	**Qualifier**	**Acceptance Criteria**
1,4-difluorobenzene	90		60-140
bromochloromethane	101		60-140
chlorobenzene-d5	106		60-140

Project Name: NHBS O&M
Project Number: 115058

Lab Number: L1408488
Report Date: 04/30/14

Sample Receipt and Container Information

Were project specific reporting limits specified? YES

Reagent H2O Preserved Vials Frozen on: NA

Cooler Information **Custody Seal**

Cooler	
N/A	Absent

Container Information

Container ID	Container Type	Cooler	pH	Temp deg C	Pres	Seal	Analysis(*)
L1408488-01A	Canister - 2.7 Liter	N/A	N/A		Y	Absent	MCP-TO15(30)
L1408488-02A	Canister - 2.7 Liter	N/A	N/A		Y	Absent	MCP-TO15-SIM(30)

*Values in parentheses indicate holding time in days

Project Name:	NHBS O&M	**Lab Number:**	L1408488
Project Number:	115058	**Report Date:**	04/30/14

GLOSSARY

Acronyms

EDL	- Estimated Detection Limit: This value represents the level to which target analyte concentrations are reported as estimated values, when those target analyte concentrations are quantified below the reporting limit (RL). The EDL includes any adjustments from dilutions, concentrations or moisture content, where applicable. The use of EDLs is specific to the analysis of PAHs using Solid-Phase Microextraction (SPME).
EPA	- Environmental Protection Agency.
LCS	- Laboratory Control Sample: A sample matrix, free from the analytes of interest, spiked with verified known amounts of analytes or a material containing known and verified amounts of analytes.
LCSD	- Laboratory Control Sample Duplicate: Refer to LCS.
LFB	- Laboratory Fortified Blank: A sample matrix, free from the analytes of interest, spiked with verified known amounts of analytes or a material containing known and verified amounts of analytes.
MDL	- Method Detection Limit: This value represents the level to which target analyte concentrations are reported as estimated values, when those target analyte concentrations are quantified below the reporting limit (RL). The MDL includes any adjustments from dilutions, concentrations or moisture content, where applicable.
MS	- Matrix Spike Sample: A sample prepared by adding a known mass of target analyte to a specified amount of matrix sample for which an independent estimate of target analyte concentration is available.
MSD	- Matrix Spike Sample Duplicate: Refer to MS.
NA	- Not Applicable.
NC	- Not Calculated: Term is utilized when one or more of the results utilized in the calculation are non-detect at the parameter's reporting unit.
NI	- Not Ignitable.
RL	- Reporting Limit: The value at which an instrument can accurately measure an analyte at a specific concentration. The RL includes any adjustments from dilutions, concentrations or moisture content, where applicable.
RPD	- Relative Percent Difference: The results from matrix and/or matrix spike duplicates are primarily designed to assess the precision of analytical results in a given matrix and are expressed as relative percent difference (RPD). Values which are less than five times the reporting limit for any individual parameter are evaluated by utilizing the absolute difference between the values; although the RPD value will be provided in the report.
SRM	- Standard Reference Material: A reference sample of a known or certified value that is of the same or similar matrix as the associated field samples.

Footnotes

1	- The reference for this analyte should be considered modified since this analyte is absent from the target analyte list of the original method.

Terms

Analytical Method: Both the document from which the method originates and the analytical reference method. (Example: EPA 8260B is shown as 1,8260B.) The codes for the reference method documents are provided in the References section of the Addendum.

Data Qualifiers

A	- Spectra identified as "Aldol Condensation Product".
B	- The analyte was detected above the reporting limit in the associated method blank. Flag only applies to associated field samples that have detectable concentrations of the analyte at less than ten times (10x) the concentration found in the blank. For MCP-related projects, flag only applies to associated field samples that have detectable concentrations of the analyte at less than ten times (10x) the concentration found in the blank. For DOD-related projects, flag only applies to associated field samples that have detectable concentrations of the analyte at less than ten times (10x) the concentration found in the blank AND the analyte was detected above one-half the reporting limit (or above the reporting limit for common lab contaminants) in the associated method blank. For NJ-Air-related projects, flag only applies to associated field samples that have detectable concentrations of the analyte above the reporting limit.
C	- Co-elution: The target analyte co-elutes with a known lab standard (i.e. surrogate, internal standards, etc.) for co-extracted analyses.
D	- Concentration of analyte was quantified from diluted analysis. Flag only applies to field samples that have detectable concentrations of the analyte.
E	- Concentration of analyte exceeds the range of the calibration curve and/or linear range of the instrument.
G	- The concentration may be biased high due to matrix interferences (i.e, co-elution) with non-target compound(s). The result should be considered estimated.
H	- The analysis of pH was performed beyond the regulatory-required holding time of 15 minutes from the time of sample collection.
I	- The lower value for the two columns has been reported due to obvious interference.

Report Format: Data Usability Report

Project Name:	NHBS O&M	**Lab Number:**	L1408488
Project Number:	115058	**Report Date:**	04/30/14

Data Qualifiers

M - Reporting Limit (RL) exceeds the MCP CAM Reporting Limit for this analyte.

NJ - Presumptive evidence of compound. This represents an estimated concentration for Tentatively Identified Compounds (TICs), where the identification is based on a mass spectral library search.

P - The RPD between the results for the two columns exceeds the method-specified criteria.

Q - The quality control sample exceeds the associated acceptance criteria. For DOD-related projects, LCS and/or Continuing Calibration Standard exceedences are also qualified on all associated sample results. Note: This flag is not applicable for matrix spike recoveries when the sample concentration is greater than 4x the spike added or for batch duplicate RPD when the sample concentrations are less than 5x the RL. (Metals only.)

R - Analytical results are from sample re-analysis.

RE - Analytical results are from sample re-extraction.

S - Analytical results are from modified screening analysis.

J - Estimated value. This represents an estimated concentration for Tentatively Identified Compounds (TICs).

ND - Not detected at the reporting limit (RL) for the sample.

Report Format: Data Usability Report

Project Name: NHBS O&M
Project Number: 115058
Lab Number: L1408488
Report Date: 04/30/14

REFERENCES

101 Compendium of Methods for the Determination of Toxic Organic Compounds in Ambient Air (EPA/625/R-96/010b:January 1999) with QC Requirements & Performance Standards for the Analysis of TO-15 under the Massachusetts Contingency Plan, WSC-CAM-IXB, July 2010.

LIMITATION OF LIABILITIES

Alpha Analytical performs services with reasonable care and diligence normal to the analytical testing laboratory industry. In the event of an error, the sole and exclusive responsibility of Alpha Analytical shall be to re-perform the work at it's own expense. In no event shall Alpha Analytical be held liable for any incidental, consequential or special damages, including but not limited to, damages in any way connected with the use of, interpretation of, information or analysis provided by Alpha Analytical.

We strongly urge our clients to comply with EPA protocol regarding sample volume, preservation, cooling, containers, sampling procedures, holding time and splitting of samples in the field.

Certification Information

Last revised April 15, 2014

The following analytes are not included in our NELAP Scope of Accreditation:

Westborough Facility
EPA 524.2: Acetone, 2-Butanone (Methyl ethyl ketone (MEK)), Tert-butyl alcohol, 2-Hexanone, Tetrahydrofuran, 1,3,5-Trichlorobenzene, 4-Methyl-2-pentanone (MIBK), Carbon disulfide, Diethyl ether.
EPA 8260C: 1,2,4,5-Tetramethylbenzene, 4-Ethyltoluene, Iodomethane (methyl iodide), Methyl methacrylate, Azobenzene.
EPA 8330A/B: PETN, Picric Acid, Nitroglycerine, 2,6-DANT, 2,4-DANT.
EPA 8270D: 1-Methylnaphthalene, Dimethylnaphthalene,1,4-Diphenylhydrazine.
EPA 625: 4-Chloroaniline, 4-Methylphenol.
SM4500: Soil: Total Phosphorus, TKN, NO2, NO3.
EPA 9071: Total Petroleum Hydrocarbons, Oil & Grease.

Mansfield Facility
EPA 8270D: Biphenyl.
EPA 2540D: TSS
EPA TO-15: Halothane, 2,4,4-Trimethyl-2-pentene, 2,4,4-Trimethyl-1-pentene, Thiophene, 2-Methylthiophene, 3-Methylthiophene, 2-Ethylthiophene, 1,2,3-Trimethylbenzene, Indan, Indene, 1,2,4,5-Tetramethylbenzene, Benzothiophene, 1-Methylnaphthalene.

The following analytes are included in our Massachusetts DEP Scope of Accreditation, Westborough Facility:

Drinking Water
EPA 200.8: Sb,As,Ba,Be,Cd,Cr,Cu,Pb,Ni,Se,Tl; **EPA 200.7**: Ba,Be,Ca,Cd,Cr,Cu,Na; **EPA 245.1:** Mercury;
EPA 300.0: Nitrate-N, Fluoride, Sulfate; **EPA 353.2**: Nitrate-N, Nitrite-N; **SM4500NO3-F**: Nitrate-N, Nitrite-N; **SM4500F-C, SM4500CN-CE, EPA 180.1, SM2130B, SM4500Cl-D, SM2320B, SM2540C, SM4500H-B**
EPA 332: Perchlorate.
Microbiology: **SM9215B; SM9223-P/A, SM9223B-Colilert-QT, Enterolert-QT.**

Non-Potable Water
EPA 200.8: Al,Sb,As,Be,Cd,Cr,Cu,Pb,Mn,Ni,Se,Ag,Tl,Zn;
EPA 200.7: Al,Sb,As,Be,Cd,Ca,Cr,Co,Cu,Fe,Pb,Mg,Mn,Mo,Ni,K,Se,Ag,Na,Sr,Ti,Tl,V,Zn;
EPA 245.1, SM4500H,B, EPA 120.1, SM2510B, SM2540C, SM2340B, SM2320B, SM4500CL-E, SM4500F-BC, SM426C, SM4500NH3-BH, **EPA 350.1**: Ammonia-N, **LACHAT 10-107-06-1-B**: Ammonia-N, **SM4500NO3-F,**
EPA 353.2: Nitrate-N**, SM4500NH3-BC-NES, EPA 351.1, SM4500P-E, SM4500P-B, E, SM5220D, EPA 410.4, SM5210B, SM5310C, SM4500CL-D, EPA 1664, SM14 510AC, EPA 420.1, SM4500-CN-CE, SM2540D.**
EPA 624: Volatile Halocarbons & Aromatics,
EPA 608: Chlordane, Toxaphene, Aldrin, alpha-BHC, beta-BHC, gamma-BHC, delta-BHC, Dieldrin, DDD, DDE, DDT, Endosulfan I, Endosulfan II, Endosulfan sulfate, Endrin, Endrin Aldehyde, Heptachlor, Heptachlor Epoxide, PCBs
EPA 625: SVOC (Acid/Base/Neutral Extractables), **EPA 600/4-81-045**: PCB-Oil.
Microbiology: **SM9223B-Colilert-QT; Enterolert-QT, SM9222D-MF**.

For a complete listing of analytes and methods, please contact your Alpha Project Manager.

AIR ANALYSIS

CHAIN OF CUSTODY

PAGE 1 OF 1

ALPHA ANALYTICAL
320 Forbes Blvd, Mansfield, MA 02048
TEL: 508-822-9300 FAX: 508-822-3288

Date Rec'd in Lab: 4/23/14

ALPHA Job #: L1408488

Client Information

Client: TRC
Address: 650 SUFFOLK ST. LOWELL MA.
Phone: 978-970-5600
Fax:
Email: DSULLIVAN, ALEONARD @TRCSOLUTIONS.COM

☐ These samples have been previously analyzed by Alpha

Project Information

Project Name: NBHS O&M
Project Location: NEW BEDFORD MA
Project #: 115058
Project Manager: DAVID SULLIVAN
ALPHA Quote #:

Turn-Around Time

☑ Standard ☐ RUSH (only confirmed if pre-approved!)

Date Due: 4/30 Time:

Report Information - Data Deliverables

☐ FAX
☑ ADEx
Criteria Checker:
(Default based on Regulatory Criteria Indicated)
Other Formats:
☑ EMAIL (standard pdf report)
☐ Additional Deliverables:
Report to: (if different than Project Manager)

Billing Information

☐ Same as Client info PO #: C115058

Regulatory Requirements/Report Limits

State/Fed	Program	Criteria
MA	MCP	

Other Project Specific Requirements/Comments: 115058 PH 1320 TSK 8

All Columns Below Must Be Filled Out

ALPHA Lab ID (Lab Use Only)	Sample ID	Collection Date	Start Time	End Time	Initial Vacuum	Final Vacuum	Sample Matrix*	Sampler's Initials	Can Size	I D Can	I D - Flow Controller	TO-14A by TO-15	TO-15	TO-15 SIM	APH	FIXED GASES	TO-13A	TO-4 / TO-10	Sample Comments (i.e. PID)
	VAPOR INLET	4/21	11:30	11:43	-29.9	-1.82	SV	JF	2.7	1066	0511			✓					
	VAPOR OUTLET	4/21	11:34	11:46	-29.9	-1.98	SV	JF	2.7	261	0602			✓					

*SAMPLE MATRIX CODES
AA = Ambient Air (Indoor/Outdoor)
SV = Soil Vapor/Landfill Gas/SVE
Other = Please Specify

Container Type: CS (TO-15 SIM)

Relinquished By:	Date/Time	Received By:	Date/Time:
James C. Faiero	4/22/14	Nathan Salk	4/23/14 @ 08:00

Please print clearly, legibly and completely. Samples can not be logged in and turnaround time clock will not start until any ambiguities are resolved. BY EXECUTING THIS COC, THE CLIENT HAS READ AND AGREES TO BE BOUND BY ALPHA'S TERMS & CONDITIONS. (See reverse side.)

Form No: 101-02 (19-Jun-09)

GROUNDWATER MONITORING WELL ANALYTICAL DATA

ANALYTICAL REPORT

Lab Number:	L1401726
Client:	TRC Environmental Consultants Wannalancit Mills 650 Suffolk Street Lowell, MA 01854
ATTN:	David Sullivan
Phone:	(978) 656-3565
Project Name:	NBHS (PSWS)
Project Number:	115058
Report Date:	04/01/14

The original project report/data package is held by Alpha Analytical. This report/data package is paginated and should be reproduced only in its entirety. Alpha Analytical holds no responsibility for results and/or data that are not consistent with the original.

Certifications & Approvals: MA (M-MA086), NY (11148), CT (PH-0574), NH (2003), NJ NELAP (MA935), RI (LAO00065), ME (MA00086), PA (68-03671), USDA (Permit #P-330-11-00240), NC (666), TX (T104704476), DOD (L2217), US Army Corps of Engineers.

Eight Walkup Drive, Westborough, MA 01581-1019
508-898-9220 (Fax) 508-898-9193 800-624-9220 - www.alphalab.com

Project Name: NBHS (PSWS)
Project Number: 115058

Lab Number: L1401726
Report Date: 04/01/14

Alpha Sample ID	Client ID	Sample Location	Collection Date/Time
L1401726-01	MW-28	NEW BEDFORD, MA	01/16/14 14:50
L1401726-02	MW-28 (FILTERED 2)	NEW BEDFORD, MA	01/16/14 14:50
L1401726-03	MW-28 (FILTERED 0.2)	NEW BEDFORD, MA	01/16/14 14:50
L1401726-04	DUP-1	NEW BEDFORD, MA	01/16/14 15:00
L1401726-05	DUP-1 (FILTERED 2)	NEW BEDFORD, MA	01/16/14 15:00
L1401726-06	DUP-1 (FILTERED 0.2)	NEW BEDFORD, MA	01/16/14 15:00
L1401726-07	MW-32	NEW BEDFORD, MA	01/17/14 09:30
L1401726-08	MW-41	NEW BEDFORD, MA	01/17/14 12:00
L1401726-09	MW-41 (FILTERED 2)	NEW BEDFORD, MA	01/17/14 12:00
L1401726-10	MW-41 (FILTERED 0.2)	NEW BEDFORD, MA	01/17/14 12:00
L1401726-11	MW-40	NEW BEDFORD, MA	01/17/14 16:20
L1401726-12	MW-40 (FILTERED 2)	NEW BEDFORD, MA	01/17/14 16:20
L1401726-13	MW-40 (FILTERED 0.2)	NEW BEDFORD, MA	01/17/14 16:20
L1401726-14	TRIP BLANK	NEW BEDFORD, MA	01/16/14 00:00

Project Name: NBHS (PSWS) **Lab Number:** L1401726

Project Number: 115058 **Report Date:** 04/01/14

MADEP MCP Response Action Analytical Report Certification

This form provides certifications for all samples performed by MCP methods. Please refer to the Sample Results and Container Information sections of this report for specification of MCP methods used for each analysis. The following questions pertain only to MCP Analytical Methods.

An affirmative response to questions A through F is required for "Presumptive Certainty" status		
A	Were all samples received in a condition consistent with those described on the Chain-of-Custody, properly preserved (including temperature) in the field or laboratory, and prepared/analyzed within method holding times?	YES
B	Were the analytical method(s) and all associated QC requirements specified in the selected CAM protocol(s) followed?	YES
C	Were all required corrective actions and analytical response actions specified in the selected CAM protocol(s) implemented for all identified performance standard non-conformances?	YES
D	Does the laboratory report comply with all the reporting requirements specified in CAM VII A, "Quality Assurance and Quality Control Guidelines for the Acquisition and Reporting of Analytical Data?"	YES
E a.	VPH, EPH, and APH Methods only: Was each method conducted without significant modification(s)? (Refer to the individual method(s) for a list of significant modifications).	N/A
E b.	APH and TO-15 Methods only: Was the complete analyte list reported for each method?	N/A
F	Were all applicable CAM protocol QC and performance standard non-conformances identified and evaluated in a laboratory narrative (including all "No" responses to Questions A through E)?	YES

A response to questions G, H and I is required for "Presumptive Certainty" status		
G	Were the reporting limits at or below all CAM reporting limits specified in the selected CAM protocol(s)?	NO
H	Were all QC performance standards specified in the CAM protocol(s) achieved?	NO
I	Were results reported for the complete analyte list specified in the selected CAM protocol(s)?	YES

For any questions answered "No", please refer to the case narrative section on the following page(s).

Please note that sample matrix information is located in the Sample Results section of this report.

Project Name: NBHS (PSWS) **Lab Number:** L1401726
Project Number: 115058 **Report Date:** 04/01/14

Case Narrative

The samples were received in accordance with the Chain of Custody and no significant deviations were encountered during the preparation or analysis unless otherwise noted. Sample Receipt, Container Information, and the Chain of Custody are located at the back of the report.

Results contained within this report relate only to the samples submitted under this Alpha Lab Number and meet all of the requirements of NELAC, for all NELAC accredited parameters. The data presented in this report is organized by parameter (i.e. VOC, SVOC, etc.). Sample specific Quality Control data (i.e. Surrogate Spike Recovery) is reported at the end of the target analyte list for each individual sample, followed by the Laboratory Batch Quality Control at the end of each parameter. If a sample was re-analyzed or re-extracted due to a required quality control corrective action and if both sets of data are reported, the Laboratory ID of the re-analysis or re-extraction is designated with an "R" or "RE", respectively. When multiple Batch Quality Control elements are reported (e.g. more than one LCS), the associated samples for each element are noted in the grey shaded header line of each data table. Any Laboratory Batch, Sample Specific % recovery or RPD value that is outside the listed Acceptance Criteria is bolded in the report. Performance criteria for CAM and RCP methods allow for some LCS compound failures to occur and still be within method compliance. In these instances, the specific failures are not narrated but are noted in the associated QC table. This information is also incorporated in the Data Usability format for our Data Merger tool where it can be reviewed along with any associated usability implications. Soil/sediments, solids and tissues are reported on a dry weight basis unless otherwise noted. Definitions of all data qualifiers and acronyms used in this report are provided in the Glossary located at the back of the report.

In reference to questions H (CAM) or 4 (RCP) when "NO" is checked, the performance criteria for CAM and RCP methods allow for some quality control failures to occur and still be within method compliance. In these instances the specific failure is not narrated but noted in the associated QC table. The information is also incorporated in the Data Usability format of our Data Merger tool where it can be reviewed along with any associated usability implications.

Please see the associated ADEx data file for a comparison of laboratory reporting limits that were achieved with the regulatory Numerical Standards requested on the Chain of Custody.

HOLD POLICY
For samples submitted on hold, Alpha's policy is to hold samples (with the exception of Air canisters) free of charge for 21 calendar days from the date the project is completed. After 21 calendar days, we will dispose of all samples submitted including those put on hold unless you have contacted your Client Service Representative and made arrangements for Alpha to continue to hold the samples. Air canisters will be disposed after 3 business days from the date the project is completed.

Please contact Client Services at 800-624-9220 with any questions.

Project Name: NBHS (PSWS) **Lab Number:** L1401726
Project Number: 115058 **Report Date:** 04/01/14

Case Narrative (continued)

Report Submission

This report replaces the report issued January 24, 2014. Due to a laboratory oversight, L1401726-03, -06, and -10 were improperly filtered for PCBs. PCB results for these samples have been removed.

MCP Related Narratives

Sample Receipt

L1401726-01, -04, -08, and -11 were field filtered for PCBs.

Volatile Organics

In reference to question H:

The initial calibration, associated with L1401726-01, -04, -07, -08, -11, and -14, did not meet the method required minimum response factor on the lowest calibration standard for 2-butanone (0.08842), 4-methyl-2-pentanone (0.06510), and 1,4-dioxane (0.00253), as well as the average response factor for acetone, 2-butanone, 4-methyl-2-pentanone, and 1,4-dioxane. In addition, a quadratic fit was utilized for carbon tetrachloride, cis-1,3-dichloropropene, bromoform, 2,2-dichloropropane, 1,1,1,2-tetrachloroethane, 1,2-dibromo-3-chloropropane, and tertiary-amyl-methyl-ether.

The continuing calibration standards, associated with L1401726-01, -04, -07, -08, -11, and -14, are outside the acceptance criteria for several compounds; however, they are within overall method allowances. Copies of the continuing calibration standards are included as an addendum to this report.

PCBs

L1401726-02 and -05 have elevated detection limits due to the dilutions required by the elevated concentrations of target compounds in the samples.

In reference to question G:

L1401726-02 and -05: None of the target analytes achieved the requested CAM reporting limits.

I, the undersigned, attest under the pains and penalties of perjury that, to the best of my knowledge and belief and based upon my personal inquiry of those responsible for providing the information contained in this analytical report, such information is accurate and complete. This certificate of analysis is not complete unless this page accompanies any and all pages of this report.

Authorized Signature: Kelly Stenstrom

Title: Technical Director/Representative Date: 04/01/14

ORGANICS

VOLATILES

Project Name: NBHS (PSWS) **Lab Number:** L1401726

Project Number: 115058 **Report Date:** 04/01/14

SAMPLE RESULTS

Lab ID:	L1401726-01	Date Collected:	01/16/14 14:50
Client ID:	MW-28	Date Received:	01/17/14
Sample Location:	NEW BEDFORD, MA	Field Prep:	See Narrative
Matrix:	Water		
Analytical Method:	97,8260C		
Analytical Date:	01/22/14 14:54		
Analyst:	MM		

Parameter	Result	Qualifier	Units	RL	MDL	Dilution Factor
MCP Volatile Organics - Westborough Lab						
Methylene chloride	ND		ug/l	2.0	--	1
1,1-Dichloroethane	ND		ug/l	1.0	--	1
Chloroform	ND		ug/l	1.0	--	1
Carbon tetrachloride	ND		ug/l	1.0	--	1
1,2-Dichloropropane	ND		ug/l	1.0	--	1
Dibromochloromethane	ND		ug/l	1.0	--	1
1,1,2-Trichloroethane	ND		ug/l	1.0	--	1
Tetrachloroethene	ND		ug/l	1.0	--	1
Chlorobenzene	ND		ug/l	1.0	--	1
Trichlorofluoromethane	ND		ug/l	2.0	--	1
1,2-Dichloroethane	ND		ug/l	1.0	--	1
1,1,1-Trichloroethane	ND		ug/l	1.0	--	1
Bromodichloromethane	ND		ug/l	1.0	--	1
trans-1,3-Dichloropropene	ND		ug/l	0.50	--	1
cis-1,3-Dichloropropene	ND		ug/l	0.50	--	1
1,1-Dichloropropene	ND		ug/l	2.0	--	1
Bromoform	ND		ug/l	2.0	--	1
1,1,2,2-Tetrachloroethane	ND		ug/l	1.0	--	1
Benzene	ND		ug/l	0.50	--	1
Toluene	ND		ug/l	1.0	--	1
Ethylbenzene	ND		ug/l	1.0	--	1
Chloromethane	ND		ug/l	2.0	--	1
Bromomethane	ND		ug/l	2.0	--	1
Vinyl chloride	ND		ug/l	1.0	--	1
Chloroethane	ND		ug/l	2.0	--	1
1,1-Dichloroethene	ND		ug/l	1.0	--	1
trans-1,2-Dichloroethene	ND		ug/l	1.0	--	1
Trichloroethene	24		ug/l	1.0	--	1
1,2-Dichlorobenzene	ND		ug/l	1.0	--	1
1,3-Dichlorobenzene	ND		ug/l	1.0	--	1
1,4-Dichlorobenzene	3.0		ug/l	1.0	--	1

Project Name: NBHS (PSWS) **Lab Number:** L1401726

Project Number: 115058 **Report Date:** 04/01/14

SAMPLE RESULTS

Lab ID: L1401726-01 Date Collected: 01/16/14 14:50

Client ID: MW-28 Date Received: 01/17/14

Sample Location: NEW BEDFORD, MA Field Prep: See Narrative

Parameter	Result	Qualifier	Units	RL	MDL	Dilution Factor
MCP Volatile Organics - Westborough Lab						
Methyl tert butyl ether	ND		ug/l	2.0	--	1
p/m-Xylene	ND		ug/l	2.0	--	1
o-Xylene	ND		ug/l	1.0	--	1
cis-1,2-Dichloroethene	3.2		ug/l	1.0	--	1
Dibromomethane	ND		ug/l	2.0	--	1
1,2,3-Trichloropropane	ND		ug/l	2.0	--	1
Styrene	ND		ug/l	1.0	--	1
Dichlorodifluoromethane	ND		ug/l	2.0	--	1
Acetone	ND		ug/l	5.0	--	1
Carbon disulfide	ND		ug/l	2.0	--	1
2-Butanone	ND		ug/l	5.0	--	1
4-Methyl-2-pentanone	ND		ug/l	5.0	--	1
2-Hexanone	ND		ug/l	5.0	--	1
Bromochloromethane	ND		ug/l	2.0	--	1
Tetrahydrofuran	ND		ug/l	2.0	--	1
2,2-Dichloropropane	ND		ug/l	2.0	--	1
1,2-Dibromoethane	ND		ug/l	2.0	--	1
1,3-Dichloropropane	ND		ug/l	2.0	--	1
1,1,1,2-Tetrachloroethane	ND		ug/l	1.0	--	1
Bromobenzene	ND		ug/l	2.0	--	1
n-Butylbenzene	ND		ug/l	2.0	--	1
sec-Butylbenzene	ND		ug/l	2.0	--	1
tert-Butylbenzene	ND		ug/l	2.0	--	1
o-Chlorotoluene	ND		ug/l	2.0	--	1
p-Chlorotoluene	ND		ug/l	2.0	--	1
1,2-Dibromo-3-chloropropane	ND		ug/l	2.0	--	1
Hexachlorobutadiene	ND		ug/l	0.60	--	1
Isopropylbenzene	ND		ug/l	2.0	--	1
p-Isopropyltoluene	ND		ug/l	2.0	--	1
Naphthalene	ND		ug/l	2.0	--	1
n-Propylbenzene	ND		ug/l	2.0	--	1
1,2,3-Trichlorobenzene	ND		ug/l	2.0	--	1
1,2,4-Trichlorobenzene	ND		ug/l	2.0	--	1
1,3,5-Trimethylbenzene	ND		ug/l	2.0	--	1
1,2,4-Trimethylbenzene	ND		ug/l	2.0	--	1
Ethyl ether	ND		ug/l	2.0	--	1
Isopropyl Ether	ND		ug/l	2.0	--	1
Ethyl-Tert-Butyl-Ether	ND		ug/l	2.0	--	1
Tertiary-Amyl Methyl Ether	ND		ug/l	2.0	--	1

Project Name: NBHS (PSWS) **Lab Number:** L1401726

Project Number: 115058 **Report Date:** 04/01/14

SAMPLE RESULTS

Lab ID:	L1401726-01	Date Collected:	01/16/14 14:50
Client ID:	MW-28	Date Received:	01/17/14
Sample Location:	NEW BEDFORD, MA	Field Prep:	See Narrative

Parameter	Result	Qualifier	Units	RL	MDL	Dilution Factor
MCP Volatile Organics - Westborough Lab						
1,4-Dioxane	ND		ug/l	250	--	1

Surrogate	% Recovery	Qualifier	Acceptance Criteria
1,2-Dichloroethane-d4	97		70-130
Toluene-d8	97		70-130
4-Bromofluorobenzene	91		70-130
Dibromofluoromethane	101		70-130

Project Name: NBHS (PSWS) **Lab Number:** L1401726

Project Number: 115058 **Report Date:** 04/01/14

SAMPLE RESULTS

Lab ID:	L1401726-04	Date Collected:	01/16/14 15:00
Client ID:	DUP-1	Date Received:	01/17/14
Sample Location:	NEW BEDFORD, MA	Field Prep:	See Narrative
Matrix:	Water		
Analytical Method:	97,8260C		
Analytical Date:	01/22/14 15:25		
Analyst:	MM		

Parameter	Result	Qualifier	Units	RL	MDL	Dilution Factor
MCP Volatile Organics - Westborough Lab						
Methylene chloride	ND		ug/l	2.0	--	1
1,1-Dichloroethane	ND		ug/l	1.0	--	1
Chloroform	ND		ug/l	1.0	--	1
Carbon tetrachloride	ND		ug/l	1.0	--	1
1,2-Dichloropropane	ND		ug/l	1.0	--	1
Dibromochloromethane	ND		ug/l	1.0	--	1
1,1,2-Trichloroethane	ND		ug/l	1.0	--	1
Tetrachloroethene	ND		ug/l	1.0	--	1
Chlorobenzene	ND		ug/l	1.0	--	1
Trichlorofluoromethane	ND		ug/l	2.0	--	1
1,2-Dichloroethane	ND		ug/l	1.0	--	1
1,1,1-Trichloroethane	ND		ug/l	1.0	--	1
Bromodichloromethane	ND		ug/l	1.0	--	1
trans-1,3-Dichloropropene	ND		ug/l	0.50	--	1
cis-1,3-Dichloropropene	ND		ug/l	0.50	--	1
1,1-Dichloropropene	ND		ug/l	2.0	--	1
Bromoform	ND		ug/l	2.0	--	1
1,1,2,2-Tetrachloroethane	ND		ug/l	1.0	--	1
Benzene	ND		ug/l	0.50	--	1
Toluene	ND		ug/l	1.0	--	1
Ethylbenzene	ND		ug/l	1.0	--	1
Chloromethane	ND		ug/l	2.0	--	1
Bromomethane	ND		ug/l	2.0	--	1
Vinyl chloride	ND		ug/l	1.0	--	1
Chloroethane	ND		ug/l	2.0	--	1
1,1-Dichloroethene	ND		ug/l	1.0	--	1
trans-1,2-Dichloroethene	ND		ug/l	1.0	--	1
Trichloroethene	24		ug/l	1.0	--	1
1,2-Dichlorobenzene	ND		ug/l	1.0	--	1
1,3-Dichlorobenzene	ND		ug/l	1.0	--	1
1,4-Dichlorobenzene	3.0		ug/l	1.0	--	1

Project Name: NBHS (PSWS) **Lab Number:** L1401726

Project Number: 115058 **Report Date:** 04/01/14

SAMPLE RESULTS

Lab ID: L1401726-04 Date Collected: 01/16/14 15:00

Client ID: DUP-1 Date Received: 01/17/14

Sample Location: NEW BEDFORD, MA Field Prep: See Narrative

Parameter	Result	Qualifier	Units	RL	MDL	Dilution Factor
MCP Volatile Organics - Westborough Lab						
Methyl tert butyl ether	ND		ug/l	2.0	--	1
p/m-Xylene	ND		ug/l	2.0	--	1
o-Xylene	ND		ug/l	1.0	--	1
cis-1,2-Dichloroethene	3.1		ug/l	1.0	--	1
Dibromomethane	ND		ug/l	2.0	--	1
1,2,3-Trichloropropane	ND		ug/l	2.0	--	1
Styrene	ND		ug/l	1.0	--	1
Dichlorodifluoromethane	ND		ug/l	2.0	--	1
Acetone	ND		ug/l	5.0	--	1
Carbon disulfide	ND		ug/l	2.0	--	1
2-Butanone	ND		ug/l	5.0	--	1
4-Methyl-2-pentanone	ND		ug/l	5.0	--	1
2-Hexanone	ND		ug/l	5.0	--	1
Bromochloromethane	ND		ug/l	2.0	--	1
Tetrahydrofuran	ND		ug/l	2.0	--	1
2,2-Dichloropropane	ND		ug/l	2.0	--	1
1,2-Dibromoethane	ND		ug/l	2.0	--	1
1,3-Dichloropropane	ND		ug/l	2.0	--	1
1,1,1,2-Tetrachloroethane	ND		ug/l	1.0	--	1
Bromobenzene	ND		ug/l	2.0	--	1
n-Butylbenzene	ND		ug/l	2.0	--	1
sec-Butylbenzene	ND		ug/l	2.0	--	1
tert-Butylbenzene	ND		ug/l	2.0	--	1
o-Chlorotoluene	ND		ug/l	2.0	--	1
p-Chlorotoluene	ND		ug/l	2.0	--	1
1,2-Dibromo-3-chloropropane	ND		ug/l	2.0	--	1
Hexachlorobutadiene	ND		ug/l	0.60	--	1
Isopropylbenzene	ND		ug/l	2.0	--	1
p-Isopropyltoluene	ND		ug/l	2.0	--	1
Naphthalene	ND		ug/l	2.0	--	1
n-Propylbenzene	ND		ug/l	2.0	--	1
1,2,3-Trichlorobenzene	ND		ug/l	2.0	--	1
1,2,4-Trichlorobenzene	ND		ug/l	2.0	--	1
1,3,5-Trimethylbenzene	ND		ug/l	2.0	--	1
1,2,4-Trimethylbenzene	ND		ug/l	2.0	--	1
Ethyl ether	ND		ug/l	2.0	--	1
Isopropyl Ether	ND		ug/l	2.0	--	1
Ethyl-Tert-Butyl-Ether	ND		ug/l	2.0	--	1
Tertiary-Amyl Methyl Ether	ND		ug/l	2.0	--	1

Project Name: NBHS (PSWS) **Lab Number:** L1401726

Project Number: 115058 **Report Date:** 04/01/14

SAMPLE RESULTS

Lab ID:	L1401726-04	Date Collected:	01/16/14 15:00
Client ID:	DUP-1	Date Received:	01/17/14
Sample Location:	NEW BEDFORD, MA	Field Prep:	See Narrative

Parameter	Result	Qualifier	Units	RL	MDL	Dilution Factor
MCP Volatile Organics - Westborough Lab						
1,4-Dioxane	ND		ug/l	250	--	1

Surrogate	% Recovery	Qualifier	Acceptance Criteria
1,2-Dichloroethane-d4	97		70-130
Toluene-d8	97		70-130
4-Bromofluorobenzene	91		70-130
Dibromofluoromethane	101		70-130

Project Name: NBHS (PSWS) **Lab Number:** L1401726

Project Number: 115058 **Report Date:** 04/01/14

SAMPLE RESULTS

Lab ID:	L1401726-07	Date Collected:	01/17/14 09:30
Client ID:	MW-32	Date Received:	01/17/14
Sample Location:	NEW BEDFORD, MA	Field Prep:	Not Specified
Matrix:	Water		
Analytical Method:	97,8260C		
Analytical Date:	01/22/14 15:57		
Analyst:	MM		

Parameter	Result	Qualifier	Units	RL	MDL	Dilution Factor
MCP Volatile Organics - Westborough Lab						
Methylene chloride	ND		ug/l	2.0	--	1
1,1-Dichloroethane	ND		ug/l	1.0	--	1
Chloroform	ND		ug/l	1.0	--	1
Carbon tetrachloride	ND		ug/l	1.0	--	1
1,2-Dichloropropane	ND		ug/l	1.0	--	1
Dibromochloromethane	ND		ug/l	1.0	--	1
1,1,2-Trichloroethane	ND		ug/l	1.0	--	1
Tetrachloroethene	ND		ug/l	1.0	--	1
Chlorobenzene	ND		ug/l	1.0	--	1
Trichlorofluoromethane	ND		ug/l	2.0	--	1
1,2-Dichloroethane	ND		ug/l	1.0	--	1
1,1,1-Trichloroethane	ND		ug/l	1.0	--	1
Bromodichloromethane	ND		ug/l	1.0	--	1
trans-1,3-Dichloropropene	ND		ug/l	0.50	--	1
cis-1,3-Dichloropropene	ND		ug/l	0.50	--	1
1,1-Dichloropropene	ND		ug/l	2.0	--	1
Bromoform	ND		ug/l	2.0	--	1
1,1,2,2-Tetrachloroethane	ND		ug/l	1.0	--	1
Benzene	ND		ug/l	0.50	--	1
Toluene	ND		ug/l	1.0	--	1
Ethylbenzene	ND		ug/l	1.0	--	1
Chloromethane	ND		ug/l	2.0	--	1
Bromomethane	ND		ug/l	2.0	--	1
Vinyl chloride	11		ug/l	1.0	--	1
Chloroethane	ND		ug/l	2.0	--	1
1,1-Dichloroethene	ND		ug/l	1.0	--	1
trans-1,2-Dichloroethene	ND		ug/l	1.0	--	1
Trichloroethene	1.1		ug/l	1.0	--	1
1,2-Dichlorobenzene	ND		ug/l	1.0	--	1
1,3-Dichlorobenzene	ND		ug/l	1.0	--	1
1,4-Dichlorobenzene	ND		ug/l	1.0	--	1

Project Name: NBHS (PSWS) **Lab Number:** L1401726

Project Number: 115058 **Report Date:** 04/01/14

SAMPLE RESULTS

Lab ID: L1401726-07 Date Collected: 01/17/14 09:30

Client ID: MW-32 Date Received: 01/17/14

Sample Location: NEW BEDFORD, MA Field Prep: Not Specified

Parameter	Result	Qualifier	Units	RL	MDL	Dilution Factor
MCP Volatile Organics - Westborough Lab						
Methyl tert butyl ether	ND		ug/l	2.0	--	1
p/m-Xylene	ND		ug/l	2.0	--	1
o-Xylene	ND		ug/l	1.0	--	1
cis-1,2-Dichloroethene	8.1		ug/l	1.0	--	1
Dibromomethane	ND		ug/l	2.0	--	1
1,2,3-Trichloropropane	ND		ug/l	2.0	--	1
Styrene	ND		ug/l	1.0	--	1
Dichlorodifluoromethane	ND		ug/l	2.0	--	1
Acetone	ND		ug/l	5.0	--	1
Carbon disulfide	ND		ug/l	2.0	--	1
2-Butanone	ND		ug/l	5.0	--	1
4-Methyl-2-pentanone	ND		ug/l	5.0	--	1
2-Hexanone	ND		ug/l	5.0	--	1
Bromochloromethane	ND		ug/l	2.0	--	1
Tetrahydrofuran	ND		ug/l	2.0	--	1
2,2-Dichloropropane	ND		ug/l	2.0	--	1
1,2-Dibromoethane	ND		ug/l	2.0	--	1
1,3-Dichloropropane	ND		ug/l	2.0	--	1
1,1,1,2-Tetrachloroethane	ND		ug/l	1.0	--	1
Bromobenzene	ND		ug/l	2.0	--	1
n-Butylbenzene	ND		ug/l	2.0	--	1
sec-Butylbenzene	ND		ug/l	2.0	--	1
tert-Butylbenzene	ND		ug/l	2.0	--	1
o-Chlorotoluene	ND		ug/l	2.0	--	1
p-Chlorotoluene	ND		ug/l	2.0	--	1
1,2-Dibromo-3-chloropropane	ND		ug/l	2.0	--	1
Hexachlorobutadiene	ND		ug/l	0.60	--	1
Isopropylbenzene	ND		ug/l	2.0	--	1
p-Isopropyltoluene	ND		ug/l	2.0	--	1
Naphthalene	ND		ug/l	2.0	--	1
n-Propylbenzene	ND		ug/l	2.0	--	1
1,2,3-Trichlorobenzene	ND		ug/l	2.0	--	1
1,2,4-Trichlorobenzene	ND		ug/l	2.0	--	1
1,3,5-Trimethylbenzene	ND		ug/l	2.0	--	1
1,2,4-Trimethylbenzene	ND		ug/l	2.0	--	1
Ethyl ether	ND		ug/l	2.0	--	1
Isopropyl Ether	ND		ug/l	2.0	--	1
Ethyl-Tert-Butyl-Ether	ND		ug/l	2.0	--	1
Tertiary-Amyl Methyl Ether	ND		ug/l	2.0	--	1

Project Name: NBHS (PSWS) **Lab Number:** L1401726

Project Number: 115058 **Report Date:** 04/01/14

SAMPLE RESULTS

Lab ID:	L1401726-07	Date Collected:	01/17/14 09:30
Client ID:	MW-32	Date Received:	01/17/14
Sample Location:	NEW BEDFORD, MA	Field Prep:	Not Specified

Parameter	Result	Qualifier	Units	RL	MDL	Dilution Factor
MCP Volatile Organics - Westborough Lab						
1,4-Dioxane	ND		ug/l	250	--	1

Surrogate	% Recovery	Qualifier	Acceptance Criteria
1,2-Dichloroethane-d4	98		70-130
Toluene-d8	97		70-130
4-Bromofluorobenzene	92		70-130
Dibromofluoromethane	103		70-130

Project Name: NBHS (PSWS) **Lab Number:** L1401726

Project Number: 115058 **Report Date:** 04/01/14

SAMPLE RESULTS

Lab ID:	L1401726-08	Date Collected:	01/17/14 12:00
Client ID:	MW-41	Date Received:	01/17/14
Sample Location:	NEW BEDFORD, MA	Field Prep:	See Narrative
Matrix:	Water		
Analytical Method:	97,8260C		
Analytical Date:	01/22/14 16:28		
Analyst:	MM		

Parameter	Result	Qualifier	Units	RL	MDL	Dilution Factor
MCP Volatile Organics - Westborough Lab						
Methylene chloride	ND		ug/l	2.0	--	1
1,1-Dichloroethane	ND		ug/l	1.0	--	1
Chloroform	ND		ug/l	1.0	--	1
Carbon tetrachloride	ND		ug/l	1.0	--	1
1,2-Dichloropropane	ND		ug/l	1.0	--	1
Dibromochloromethane	ND		ug/l	1.0	--	1
1,1,2-Trichloroethane	ND		ug/l	1.0	--	1
Tetrachloroethene	ND		ug/l	1.0	--	1
Chlorobenzene	ND		ug/l	1.0	--	1
Trichlorofluoromethane	ND		ug/l	2.0	--	1
1,2-Dichloroethane	ND		ug/l	1.0	--	1
1,1,1-Trichloroethane	ND		ug/l	1.0	--	1
Bromodichloromethane	ND		ug/l	1.0	--	1
trans-1,3-Dichloropropene	ND		ug/l	0.50	--	1
cis-1,3-Dichloropropene	ND		ug/l	0.50	--	1
1,1-Dichloropropene	ND		ug/l	2.0	--	1
Bromoform	ND		ug/l	2.0	--	1
1,1,2,2-Tetrachloroethane	ND		ug/l	1.0	--	1
Benzene	ND		ug/l	0.50	--	1
Toluene	ND		ug/l	1.0	--	1
Ethylbenzene	ND		ug/l	1.0	--	1
Chloromethane	ND		ug/l	2.0	--	1
Bromomethane	ND		ug/l	2.0	--	1
Vinyl chloride	5.0		ug/l	1.0	--	1
Chloroethane	ND		ug/l	2.0	--	1
1,1-Dichloroethene	ND		ug/l	1.0	--	1
trans-1,2-Dichloroethene	3.7		ug/l	1.0	--	1
Trichloroethene	11		ug/l	1.0	--	1
1,2-Dichlorobenzene	ND		ug/l	1.0	--	1
1,3-Dichlorobenzene	ND		ug/l	1.0	--	1
1,4-Dichlorobenzene	1.1		ug/l	1.0	--	1

Project Name: NBHS (PSWS) **Lab Number:** L1401726

Project Number: 115058 **Report Date:** 04/01/14

SAMPLE RESULTS

Lab ID: L1401726-08 Date Collected: 01/17/14 12:00

Client ID: MW-41 Date Received: 01/17/14

Sample Location: NEW BEDFORD, MA Field Prep: See Narrative

Parameter	Result	Qualifier	Units	RL	MDL	Dilution Factor
MCP Volatile Organics - Westborough Lab						
Methyl tert butyl ether	ND		ug/l	2.0	--	1
p/m-Xylene	ND		ug/l	2.0	--	1
o-Xylene	ND		ug/l	1.0	--	1
cis-1,2-Dichloroethene	13		ug/l	1.0	--	1
Dibromomethane	ND		ug/l	2.0	--	1
1,2,3-Trichloropropane	ND		ug/l	2.0	--	1
Styrene	ND		ug/l	1.0	--	1
Dichlorodifluoromethane	ND		ug/l	2.0	--	1
Acetone	ND		ug/l	5.0	--	1
Carbon disulfide	ND		ug/l	2.0	--	1
2-Butanone	ND		ug/l	5.0	--	1
4-Methyl-2-pentanone	ND		ug/l	5.0	--	1
2-Hexanone	ND		ug/l	5.0	--	1
Bromochloromethane	ND		ug/l	2.0	--	1
Tetrahydrofuran	ND		ug/l	2.0	--	1
2,2-Dichloropropane	ND		ug/l	2.0	--	1
1,2-Dibromoethane	ND		ug/l	2.0	--	1
1,3-Dichloropropane	ND		ug/l	2.0	--	1
1,1,1,2-Tetrachloroethane	ND		ug/l	1.0	--	1
Bromobenzene	ND		ug/l	2.0	--	1
n-Butylbenzene	ND		ug/l	2.0	--	1
sec-Butylbenzene	ND		ug/l	2.0	--	1
tert-Butylbenzene	ND		ug/l	2.0	--	1
o-Chlorotoluene	ND		ug/l	2.0	--	1
p-Chlorotoluene	ND		ug/l	2.0	--	1
1,2-Dibromo-3-chloropropane	ND		ug/l	2.0	--	1
Hexachlorobutadiene	ND		ug/l	0.60	--	1
Isopropylbenzene	ND		ug/l	2.0	--	1
p-Isopropyltoluene	ND		ug/l	2.0	--	1
Naphthalene	ND		ug/l	2.0	--	1
n-Propylbenzene	ND		ug/l	2.0	--	1
1,2,3-Trichlorobenzene	ND		ug/l	2.0	--	1
1,2,4-Trichlorobenzene	3.4		ug/l	2.0	--	1
1,3,5-Trimethylbenzene	ND		ug/l	2.0	--	1
1,2,4-Trimethylbenzene	ND		ug/l	2.0	--	1
Ethyl ether	ND		ug/l	2.0	--	1
Isopropyl Ether	ND		ug/l	2.0	--	1
Ethyl-Tert-Butyl-Ether	ND		ug/l	2.0	--	1
Tertiary-Amyl Methyl Ether	ND		ug/l	2.0	--	1

Project Name: NBHS (PSWS) **Lab Number:** L1401726

Project Number: 115058 **Report Date:** 04/01/14

SAMPLE RESULTS

Lab ID: L1401726-08 Date Collected: 01/17/14 12:00

Client ID: MW-41 Date Received: 01/17/14

Sample Location: NEW BEDFORD, MA Field Prep: See Narrative

Parameter	Result	Qualifier	Units	RL	MDL	Dilution Factor
MCP Volatile Organics - Westborough Lab						
1,4-Dioxane	ND		ug/l	250	--	1

Surrogate	% Recovery	Qualifier	Acceptance Criteria
1,2-Dichloroethane-d4	96		70-130
Toluene-d8	97		70-130
4-Bromofluorobenzene	89		70-130
Dibromofluoromethane	100		70-130

Project Name: NBHS (PSWS) **Lab Number:** L1401726

Project Number: 115058 **Report Date:** 04/01/14

SAMPLE RESULTS

Lab ID:	L1401726-11	Date Collected:	01/17/14 16:20
Client ID:	MW-40	Date Received:	01/17/14
Sample Location:	NEW BEDFORD, MA	Field Prep:	See Narrative
Matrix:	Water		
Analytical Method:	97,8260C		
Analytical Date:	01/22/14 17:00		
Analyst:	MM		

Parameter	Result	Qualifier	Units	RL	MDL	Dilution Factor
MCP Volatile Organics - Westborough Lab						
Methylene chloride	ND		ug/l	2.0	--	1
1,1-Dichloroethane	ND		ug/l	1.0	--	1
Chloroform	ND		ug/l	1.0	--	1
Carbon tetrachloride	ND		ug/l	1.0	--	1
1,2-Dichloropropane	ND		ug/l	1.0	--	1
Dibromochloromethane	ND		ug/l	1.0	--	1
1,1,2-Trichloroethane	ND		ug/l	1.0	--	1
Tetrachloroethene	ND		ug/l	1.0	--	1
Chlorobenzene	ND		ug/l	1.0	--	1
Trichlorofluoromethane	ND		ug/l	2.0	--	1
1,2-Dichloroethane	ND		ug/l	1.0	--	1
1,1,1-Trichloroethane	ND		ug/l	1.0	--	1
Bromodichloromethane	ND		ug/l	1.0	--	1
trans-1,3-Dichloropropene	ND		ug/l	0.50	--	1
cis-1,3-Dichloropropene	ND		ug/l	0.50	--	1
1,1-Dichloropropene	ND		ug/l	2.0	--	1
Bromoform	ND		ug/l	2.0	--	1
1,1,2,2-Tetrachloroethane	ND		ug/l	1.0	--	1
Benzene	ND		ug/l	0.50	--	1
Toluene	ND		ug/l	1.0	--	1
Ethylbenzene	ND		ug/l	1.0	--	1
Chloromethane	ND		ug/l	2.0	--	1
Bromomethane	ND		ug/l	2.0	--	1
Vinyl chloride	ND		ug/l	1.0	--	1
Chloroethane	ND		ug/l	2.0	--	1
1,1-Dichloroethene	ND		ug/l	1.0	--	1
trans-1,2-Dichloroethene	ND		ug/l	1.0	--	1
Trichloroethene	ND		ug/l	1.0	--	1
1,2-Dichlorobenzene	ND		ug/l	1.0	--	1
1,3-Dichlorobenzene	ND		ug/l	1.0	--	1
1,4-Dichlorobenzene	ND		ug/l	1.0	--	1

Project Name: NBHS (PSWS) **Lab Number:** L1401726

Project Number: 115058 **Report Date:** 04/01/14

SAMPLE RESULTS

Lab ID: L1401726-11 Date Collected: 01/17/14 16:20

Client ID: MW-40 Date Received: 01/17/14

Sample Location: NEW BEDFORD, MA Field Prep: See Narrative

Parameter	Result	Qualifier	Units	RL	MDL	Dilution Factor
MCP Volatile Organics - Westborough Lab						
Methyl tert butyl ether	ND		ug/l	2.0	--	1
p/m-Xylene	ND		ug/l	2.0	--	1
o-Xylene	ND		ug/l	1.0	--	1
cis-1,2-Dichloroethene	ND		ug/l	1.0	--	1
Dibromomethane	ND		ug/l	2.0	--	1
1,2,3-Trichloropropane	ND		ug/l	2.0	--	1
Styrene	ND		ug/l	1.0	--	1
Dichlorodifluoromethane	ND		ug/l	2.0	--	1
Acetone	ND		ug/l	5.0	--	1
Carbon disulfide	ND		ug/l	2.0	--	1
2-Butanone	ND		ug/l	5.0	--	1
4-Methyl-2-pentanone	ND		ug/l	5.0	--	1
2-Hexanone	ND		ug/l	5.0	--	1
Bromochloromethane	ND		ug/l	2.0	--	1
Tetrahydrofuran	ND		ug/l	2.0	--	1
2,2-Dichloropropane	ND		ug/l	2.0	--	1
1,2-Dibromoethane	ND		ug/l	2.0	--	1
1,3-Dichloropropane	ND		ug/l	2.0	--	1
1,1,1,2-Tetrachloroethane	ND		ug/l	1.0	--	1
Bromobenzene	ND		ug/l	2.0	--	1
n-Butylbenzene	ND		ug/l	2.0	--	1
sec-Butylbenzene	ND		ug/l	2.0	--	1
tert-Butylbenzene	ND		ug/l	2.0	--	1
o-Chlorotoluene	ND		ug/l	2.0	--	1
p-Chlorotoluene	ND		ug/l	2.0	--	1
1,2-Dibromo-3-chloropropane	ND		ug/l	2.0	--	1
Hexachlorobutadiene	ND		ug/l	0.60	--	1
Isopropylbenzene	ND		ug/l	2.0	--	1
p-Isopropyltoluene	ND		ug/l	2.0	--	1
Naphthalene	ND		ug/l	2.0	--	1
n-Propylbenzene	ND		ug/l	2.0	--	1
1,2,3-Trichlorobenzene	ND		ug/l	2.0	--	1
1,2,4-Trichlorobenzene	ND		ug/l	2.0	--	1
1,3,5-Trimethylbenzene	ND		ug/l	2.0	--	1
1,2,4-Trimethylbenzene	ND		ug/l	2.0	--	1
Ethyl ether	ND		ug/l	2.0	--	1
Isopropyl Ether	ND		ug/l	2.0	--	1
Ethyl-Tert-Butyl-Ether	ND		ug/l	2.0	--	1
Tertiary-Amyl Methyl Ether	ND		ug/l	2.0	--	1

Project Name: NBHS (PSWS) **Lab Number:** L1401726

Project Number: 115058 **Report Date:** 04/01/14

SAMPLE RESULTS

Lab ID:	L1401726-11	Date Collected:	01/17/14 16:20
Client ID:	MW-40	Date Received:	01/17/14
Sample Location:	NEW BEDFORD, MA	Field Prep:	See Narrative

Parameter	Result	Qualifier	Units	RL	MDL	Dilution Factor
MCP Volatile Organics - Westborough Lab						
1,4-Dioxane	ND		ug/l	250	--	1

Surrogate	% Recovery	Qualifier	Acceptance Criteria
1,2-Dichloroethane-d4	96		70-130
Toluene-d8	97		70-130
4-Bromofluorobenzene	93		70-130
Dibromofluoromethane	102		70-130

Project Name: NBHS (PSWS) **Lab Number:** L1401726

Project Number: 115058 **Report Date:** 04/01/14

SAMPLE RESULTS

Lab ID:	L1401726-14	Date Collected:	01/16/14 00:00
Client ID:	TRIP BLANK	Date Received:	01/17/14
Sample Location:	NEW BEDFORD, MA	Field Prep:	Not Specified
Matrix:	Water		
Analytical Method:	97,8260C		
Analytical Date:	01/23/14 06:47		
Analyst:	MM		

Parameter	Result	Qualifier	Units	RL	MDL	Dilution Factor
MCP Volatile Organics - Westborough Lab						
Methylene chloride	ND		ug/l	2.0	--	1
1,1-Dichloroethane	ND		ug/l	1.0	--	1
Chloroform	ND		ug/l	1.0	--	1
Carbon tetrachloride	ND		ug/l	1.0	--	1
1,2-Dichloropropane	ND		ug/l	1.0	--	1
Dibromochloromethane	ND		ug/l	1.0	--	1
1,1,2-Trichloroethane	ND		ug/l	1.0	--	1
Tetrachloroethene	ND		ug/l	1.0	--	1
Chlorobenzene	ND		ug/l	1.0	--	1
Trichlorofluoromethane	ND		ug/l	2.0	--	1
1,2-Dichloroethane	ND		ug/l	1.0	--	1
1,1,1-Trichloroethane	ND		ug/l	1.0	--	1
Bromodichloromethane	ND		ug/l	1.0	--	1
trans-1,3-Dichloropropene	ND		ug/l	0.50	--	1
cis-1,3-Dichloropropene	ND		ug/l	0.50	--	1
1,1-Dichloropropene	ND		ug/l	2.0	--	1
Bromoform	ND		ug/l	2.0	--	1
1,1,2,2-Tetrachloroethane	ND		ug/l	1.0	--	1
Benzene	ND		ug/l	0.50	--	1
Toluene	ND		ug/l	1.0	--	1
Ethylbenzene	ND		ug/l	1.0	--	1
Chloromethane	ND		ug/l	2.0	--	1
Bromomethane	ND		ug/l	2.0	--	1
Vinyl chloride	ND		ug/l	1.0	--	1
Chloroethane	ND		ug/l	2.0	--	1
1,1-Dichloroethene	ND		ug/l	1.0	--	1
trans-1,2-Dichloroethene	ND		ug/l	1.0	--	1
Trichloroethene	ND		ug/l	1.0	--	1
1,2-Dichlorobenzene	ND		ug/l	1.0	--	1
1,3-Dichlorobenzene	ND		ug/l	1.0	--	1
1,4-Dichlorobenzene	ND		ug/l	1.0	--	1

Project Name: NBHS (PSWS) **Lab Number:** L1401726

Project Number: 115058 **Report Date:** 04/01/14

SAMPLE RESULTS

Lab ID: L1401726-14 Date Collected: 01/16/14 00:00

Client ID: TRIP BLANK Date Received: 01/17/14

Sample Location: NEW BEDFORD, MA Field Prep: Not Specified

Parameter	Result	Qualifier	Units	RL	MDL	Dilution Factor
MCP Volatile Organics - Westborough Lab						
Methyl tert butyl ether	ND		ug/l	2.0	--	1
p/m-Xylene	ND		ug/l	2.0	--	1
o-Xylene	ND		ug/l	1.0	--	1
cis-1,2-Dichloroethene	ND		ug/l	1.0	--	1
Dibromomethane	ND		ug/l	2.0	--	1
1,2,3-Trichloropropane	ND		ug/l	2.0	--	1
Styrene	ND		ug/l	1.0	--	1
Dichlorodifluoromethane	ND		ug/l	2.0	--	1
Acetone	ND		ug/l	5.0	--	1
Carbon disulfide	ND		ug/l	2.0	--	1
2-Butanone	ND		ug/l	5.0	--	1
4-Methyl-2-pentanone	ND		ug/l	5.0	--	1
2-Hexanone	ND		ug/l	5.0	--	1
Bromochloromethane	ND		ug/l	2.0	--	1
Tetrahydrofuran	ND		ug/l	2.0	--	1
2,2-Dichloropropane	ND		ug/l	2.0	--	1
1,2-Dibromoethane	ND		ug/l	2.0	--	1
1,3-Dichloropropane	ND		ug/l	2.0	--	1
1,1,1,2-Tetrachloroethane	ND		ug/l	1.0	--	1
Bromobenzene	ND		ug/l	2.0	--	1
n-Butylbenzene	ND		ug/l	2.0	--	1
sec-Butylbenzene	ND		ug/l	2.0	--	1
tert-Butylbenzene	ND		ug/l	2.0	--	1
o-Chlorotoluene	ND		ug/l	2.0	--	1
p-Chlorotoluene	ND		ug/l	2.0	--	1
1,2-Dibromo-3-chloropropane	ND		ug/l	2.0	--	1
Hexachlorobutadiene	ND		ug/l	0.60	--	1
Isopropylbenzene	ND		ug/l	2.0	--	1
p-Isopropyltoluene	ND		ug/l	2.0	--	1
Naphthalene	ND		ug/l	2.0	--	1
n-Propylbenzene	ND		ug/l	2.0	--	1
1,2,3-Trichlorobenzene	ND		ug/l	2.0	--	1
1,2,4-Trichlorobenzene	ND		ug/l	2.0	--	1
1,3,5-Trimethylbenzene	ND		ug/l	2.0	--	1
1,2,4-Trimethylbenzene	ND		ug/l	2.0	--	1
Ethyl ether	ND		ug/l	2.0	--	1
Isopropyl Ether	ND		ug/l	2.0	--	1
Ethyl-Tert-Butyl-Ether	ND		ug/l	2.0	--	1
Tertiary-Amyl Methyl Ether	ND		ug/l	2.0	--	1

Project Name: NBHS (PSWS) **Lab Number:** L1401726

Project Number: 115058 **Report Date:** 04/01/14

SAMPLE RESULTS

Lab ID:	L1401726-14	Date Collected:	01/16/14 00:00
Client ID:	TRIP BLANK	Date Received:	01/17/14
Sample Location:	NEW BEDFORD, MA	Field Prep:	Not Specified

Parameter	Result	Qualifier	Units	RL	MDL	Dilution Factor
MCP Volatile Organics - Westborough Lab						
1,4-Dioxane	ND		ug/l	250	--	1

Surrogate	% Recovery	Qualifier	Acceptance Criteria
1,2-Dichloroethane-d4	95		70-130
Toluene-d8	97		70-130
4-Bromofluorobenzene	95		70-130
Dibromofluoromethane	101		70-130

Project Name: NBHS (PSWS) **Lab Number:** L1401726

Project Number: 115058 **Report Date:** 04/01/14

Method Blank Analysis
Batch Quality Control

Analytical Method: 97,8260C
Analytical Date: 01/22/14 07:33
Analyst: MM

Parameter	Result	Qualifier	Units	RL	MDL
MCP Volatile Organics - Westborough Lab for sample(s): 01,04,07-08,11 Batch: WG666215-3					
Methylene chloride	ND		ug/l	2.0	--
1,1-Dichloroethane	ND		ug/l	1.0	--
Chloroform	ND		ug/l	1.0	--
Carbon tetrachloride	ND		ug/l	1.0	--
1,2-Dichloropropane	ND		ug/l	1.0	--
Dibromochloromethane	ND		ug/l	1.0	--
1,1,2-Trichloroethane	ND		ug/l	1.0	--
Tetrachloroethene	ND		ug/l	1.0	--
Chlorobenzene	ND		ug/l	1.0	--
Trichlorofluoromethane	ND		ug/l	2.0	--
1,2-Dichloroethane	ND		ug/l	1.0	--
1,1,1-Trichloroethane	ND		ug/l	1.0	--
Bromodichloromethane	ND		ug/l	1.0	--
trans-1,3-Dichloropropene	ND		ug/l	0.50	--
cis-1,3-Dichloropropene	ND		ug/l	0.50	--
1,1-Dichloropropene	ND		ug/l	2.0	--
Bromoform	ND		ug/l	2.0	--
1,1,2,2-Tetrachloroethane	ND		ug/l	1.0	--
Benzene	ND		ug/l	0.50	--
Toluene	ND		ug/l	1.0	--
Ethylbenzene	ND		ug/l	1.0	--
Chloromethane	ND		ug/l	2.0	--
Bromomethane	ND		ug/l	2.0	--
Vinyl chloride	ND		ug/l	1.0	--
Chloroethane	ND		ug/l	2.0	--
1,1-Dichloroethene	ND		ug/l	1.0	--
trans-1,2-Dichloroethene	ND		ug/l	1.0	--
Trichloroethene	ND		ug/l	1.0	--
1,2-Dichlorobenzene	ND		ug/l	1.0	--
1,3-Dichlorobenzene	ND		ug/l	1.0	--
1,4-Dichlorobenzene	ND		ug/l	1.0	--

Project Name: NBHS (PSWS) **Lab Number:** L1401726

Project Number: 115058 **Report Date:** 04/01/14

Method Blank Analysis
Batch Quality Control

Analytical Method: 97,8260C
Analytical Date: 01/22/14 07:33
Analyst: MM

Parameter	Result	Qualifier	Units	RL	MDL
MCP Volatile Organics - Westborough Lab for sample(s): 01,04,07-08,11 Batch: WG666215-3					
Methyl tert butyl ether	ND		ug/l	2.0	--
p/m-Xylene	ND		ug/l	2.0	--
o-Xylene	ND		ug/l	1.0	--
cis-1,2-Dichloroethene	ND		ug/l	1.0	--
Dibromomethane	ND		ug/l	2.0	--
1,2,3-Trichloropropane	ND		ug/l	2.0	--
Styrene	ND		ug/l	1.0	--
Dichlorodifluoromethane	ND		ug/l	2.0	--
Acetone	ND		ug/l	5.0	--
Carbon disulfide	ND		ug/l	2.0	--
2-Butanone	ND		ug/l	5.0	--
4-Methyl-2-pentanone	ND		ug/l	5.0	--
2-Hexanone	ND		ug/l	5.0	--
Bromochloromethane	ND		ug/l	2.0	--
Tetrahydrofuran	ND		ug/l	2.0	--
2,2-Dichloropropane	ND		ug/l	2.0	--
1,2-Dibromoethane	ND		ug/l	2.0	--
1,3-Dichloropropane	ND		ug/l	2.0	--
1,1,1,2-Tetrachloroethane	ND		ug/l	1.0	--
Bromobenzene	ND		ug/l	2.0	--
n-Butylbenzene	ND		ug/l	2.0	--
sec-Butylbenzene	ND		ug/l	2.0	--
tert-Butylbenzene	ND		ug/l	2.0	--
o-Chlorotoluene	ND		ug/l	2.0	--
p-Chlorotoluene	ND		ug/l	2.0	--
1,2-Dibromo-3-chloropropane	ND		ug/l	2.0	--
Hexachlorobutadiene	ND		ug/l	0.60	--
Isopropylbenzene	ND		ug/l	2.0	--
p-Isopropyltoluene	ND		ug/l	2.0	--
Naphthalene	ND		ug/l	2.0	--
n-Propylbenzene	ND		ug/l	2.0	--

Project Name: NBHS (PSWS)
Project Number: 115058

Lab Number: L1401726
Report Date: 04/01/14

Method Blank Analysis
Batch Quality Control

Analytical Method: 97,8260C
Analytical Date: 01/22/14 07:33
Analyst: MM

Parameter	Result	Qualifier	Units	RL	MDL
MCP Volatile Organics - Westborough Lab for sample(s): 01,04,07-08,11 Batch: WG666215-3					
1,2,3-Trichlorobenzene	ND		ug/l	2.0	--
1,2,4-Trichlorobenzene	ND		ug/l	2.0	--
1,3,5-Trimethylbenzene	ND		ug/l	2.0	--
1,2,4-Trimethylbenzene	ND		ug/l	2.0	--
Ethyl ether	ND		ug/l	2.0	--
Isopropyl Ether	ND		ug/l	2.0	--
Ethyl-Tert-Butyl-Ether	ND		ug/l	2.0	--
Tertiary-Amyl Methyl Ether	ND		ug/l	2.0	--
1,4-Dioxane	ND		ug/l	250	--

Tentatively Identified Compounds

No Tentatively Identified Compounds	ND	ug/l

Surrogate	%Recovery	Qualifier	Acceptance Criteria
1,2-Dichloroethane-d4	95		70-130
Toluene-d8	97		70-130
4-Bromofluorobenzene	94		70-130
Dibromofluoromethane	100		70-130

Project Name: NBHS (PSWS) **Lab Number:** L1401726

Project Number: 115058 **Report Date:** 04/01/14

Method Blank Analysis
Batch Quality Control

Analytical Method: 97,8260C
Analytical Date: 01/23/14 06:16
Analyst: MM

Parameter	Result	Qualifier	Units	RL	MDL
MCP Volatile Organics - Westborough Lab for sample(s): 14 Batch: WG666400-3					
Methylene chloride	ND		ug/l	2.0	--
1,1-Dichloroethane	ND		ug/l	1.0	--
Chloroform	ND		ug/l	1.0	--
Carbon tetrachloride	ND		ug/l	1.0	--
1,2-Dichloropropane	ND		ug/l	1.0	--
Dibromochloromethane	ND		ug/l	1.0	--
1,1,2-Trichloroethane	ND		ug/l	1.0	--
Tetrachloroethene	ND		ug/l	1.0	--
Chlorobenzene	ND		ug/l	1.0	--
Trichlorofluoromethane	ND		ug/l	2.0	--
1,2-Dichloroethane	ND		ug/l	1.0	--
1,1,1-Trichloroethane	ND		ug/l	1.0	--
Bromodichloromethane	ND		ug/l	1.0	--
trans-1,3-Dichloropropene	ND		ug/l	0.50	--
cis-1,3-Dichloropropene	ND		ug/l	0.50	--
1,1-Dichloropropene	ND		ug/l	2.0	--
Bromoform	ND		ug/l	2.0	--
1,1,2,2-Tetrachloroethane	ND		ug/l	1.0	--
Benzene	ND		ug/l	0.50	--
Toluene	ND		ug/l	1.0	--
Ethylbenzene	ND		ug/l	1.0	--
Chloromethane	ND		ug/l	2.0	--
Bromomethane	ND		ug/l	2.0	--
Vinyl chloride	ND		ug/l	1.0	--
Chloroethane	ND		ug/l	2.0	--
1,1-Dichloroethene	ND		ug/l	1.0	--
trans-1,2-Dichloroethene	ND		ug/l	1.0	--
Trichloroethene	ND		ug/l	1.0	--
1,2-Dichlorobenzene	ND		ug/l	1.0	--
1,3-Dichlorobenzene	ND		ug/l	1.0	--
1,4-Dichlorobenzene	ND		ug/l	1.0	--

Project Name: NBHS (PSWS) **Lab Number:** L1401726

Project Number: 115058 **Report Date:** 04/01/14

Method Blank Analysis
Batch Quality Control

Analytical Method: 97,8260C
Analytical Date: 01/23/14 06:16
Analyst: MM

Parameter	Result	Qualifier	Units	RL	MDL
MCP Volatile Organics - Westborough Lab for sample(s): 14 Batch: WG666400-3					
Methyl tert butyl ether	ND		ug/l	2.0	--
p/m-Xylene	ND		ug/l	2.0	--
o-Xylene	ND		ug/l	1.0	--
cis-1,2-Dichloroethene	ND		ug/l	1.0	--
Dibromomethane	ND		ug/l	2.0	--
1,2,3-Trichloropropane	ND		ug/l	2.0	--
Styrene	ND		ug/l	1.0	--
Dichlorodifluoromethane	ND		ug/l	2.0	--
Acetone	ND		ug/l	5.0	--
Carbon disulfide	ND		ug/l	2.0	--
2-Butanone	ND		ug/l	5.0	--
4-Methyl-2-pentanone	ND		ug/l	5.0	--
2-Hexanone	ND		ug/l	5.0	--
Bromochloromethane	ND		ug/l	2.0	--
Tetrahydrofuran	ND		ug/l	2.0	--
2,2-Dichloropropane	ND		ug/l	2.0	--
1,2-Dibromoethane	ND		ug/l	2.0	--
1,3-Dichloropropane	ND		ug/l	2.0	--
1,1,1,2-Tetrachloroethane	ND		ug/l	1.0	--
Bromobenzene	ND		ug/l	2.0	--
n-Butylbenzene	ND		ug/l	2.0	--
sec-Butylbenzene	ND		ug/l	2.0	--
tert-Butylbenzene	ND		ug/l	2.0	--
o-Chlorotoluene	ND		ug/l	2.0	--
p-Chlorotoluene	ND		ug/l	2.0	--
1,2-Dibromo-3-chloropropane	ND		ug/l	2.0	--
Hexachlorobutadiene	ND		ug/l	0.60	--
Isopropylbenzene	ND		ug/l	2.0	--
p-Isopropyltoluene	ND		ug/l	2.0	--
Naphthalene	ND		ug/l	2.0	--
n-Propylbenzene	ND		ug/l	2.0	--

Project Name: NBHS (PSWS)
Project Number: 115058

Lab Number: L1401726
Report Date: 04/01/14

Method Blank Analysis
Batch Quality Control

Analytical Method: 97,8260C
Analytical Date: 01/23/14 06:16
Analyst: MM

Parameter	Result	Qualifier	Units	RL	MDL
MCP Volatile Organics - Westborough Lab for sample(s): 14 Batch: WG666400-3					
1,2,3-Trichlorobenzene	ND		ug/l	2.0	--
1,2,4-Trichlorobenzene	ND		ug/l	2.0	--
1,3,5-Trimethylbenzene	ND		ug/l	2.0	--
1,2,4-Trimethylbenzene	ND		ug/l	2.0	--
Ethyl ether	ND		ug/l	2.0	--
Isopropyl Ether	ND		ug/l	2.0	--
Ethyl-Tert-Butyl-Ether	ND		ug/l	2.0	--
Tertiary-Amyl Methyl Ether	ND		ug/l	2.0	--
1,4-Dioxane	ND		ug/l	250	--

Surrogate	%Recovery	Qualifier	Acceptance Criteria
1,2-Dichloroethane-d4	96		70-130
Toluene-d8	98		70-130
4-Bromofluorobenzene	94		70-130
Dibromofluoromethane	101		70-130

Lab Control Sample Analysis
Batch Quality Control

Project Name: NBHS (PSWS)
Project Number: 115058

Lab Number: L1401726
Report Date: 04/01/14

Parameter	LCS %Recovery	Qual	LCSD %Recovery	Qual	%Recovery Limits	RPD	Qual	RPD Limits
MCP Volatile Organics - Westborough Lab Associated sample(s): 01,04,07-08,11 Batch: WG666215-1 WG666215-2								
Methylene chloride	107		105		70-130	2		20
1,1-Dichloroethane	104		102		70-130	2		20
Chloroform	108		107		70-130	1		20
Carbon tetrachloride	97		95		70-130	2		20
1,2-Dichloropropane	105		105		70-130	0		20
Dibromochloromethane	108		106		70-130	2		20
1,1,2-Trichloroethane	108		106		70-130	2		20
Tetrachloroethene	115		113		70-130	2		20
Chlorobenzene	109		107		70-130	2		20
Trichlorofluoromethane	106		103		70-130	3		20
1,2-Dichloroethane	105		102		70-130	3		20
1,1,1-Trichloroethane	115		115		70-130	0		20
Bromodichloromethane	105		105		70-130	0		20
trans-1,3-Dichloropropene	98		97		70-130	1		20
cis-1,3-Dichloropropene	102		102		70-130	0		20
1,1-Dichloropropene	109		106		70-130	3		20
Bromoform	104		105		70-130	1		20
1,1,2,2-Tetrachloroethane	101		102		70-130	1		20
Benzene	109		107		70-130	2		20
Toluene	104		103		70-130	1		20
Ethylbenzene	108		106		70-130	2		20

Lab Control Sample Analysis
Batch Quality Control

Project Name: NBHS (PSWS)
Project Number: 115058

Lab Number: L1401726
Report Date: 04/01/14

Parameter	LCS %Recovery	Qual	LCSD %Recovery	Qual	%Recovery Limits	RPD	Qual	RPD Limits
MCP Volatile Organics - Westborough Lab Associated sample(s): 01,04,07-08,11 Batch: WG666215-1 WG666215-2								
Chloromethane	97		95		70-130	2		20
Bromomethane	92		92		70-130	0		20
Vinyl chloride	107		105		70-130	2		20
Chloroethane	104		102		70-130	2		20
1,1-Dichloroethene	112		111		70-130	1		20
trans-1,2-Dichloroethene	114		110		70-130	4		20
Trichloroethene	110		109		70-130	1		20
1,2-Dichlorobenzene	108		109		70-130	1		20
1,3-Dichlorobenzene	107		108		70-130	1		20
1,4-Dichlorobenzene	107		107		70-130	0		20
Methyl tert butyl ether	108		107		70-130	1		20
p/m-Xylene	103		102		70-130	1		20
o-Xylene	106		104		70-130	2		20
cis-1,2-Dichloroethene	107		106		70-130	1		20
Dibromomethane	109		108		70-130	1		20
1,2,3-Trichloropropane	99		99		70-130	0		20
Styrene	113		112		70-130	1		20
Dichlorodifluoromethane	117		114		70-130	3		20
Acetone	119		114		70-130	4		20
Carbon disulfide	98		97		70-130	1		20
2-Butanone	118		112		70-130	5		20

Lab Control Sample Analysis
Batch Quality Control

Project Name: NBHS (PSWS)
Project Number: 115058

Lab Number: L1401726
Report Date: 04/01/14

Parameter	LCS %Recovery	Qual	LCSD %Recovery	Qual	%Recovery Limits	RPD	Qual	RPD Limits
MCP Volatile Organics - Westborough Lab Associated sample(s): 01,04,07-08,11 Batch: WG666215-1 WG666215-2								
4-Methyl-2-pentanone	96		94		70-130	2		20
2-Hexanone	94		91		70-130	3		20
Bromochloromethane	117		117		70-130	0		20
Tetrahydrofuran	90		89		70-130	1		20
2,2-Dichloropropane	112		110		70-130	2		20
1,2-Dibromoethane	106		104		70-130	2		20
1,3-Dichloropropane	106		104		70-130	2		20
1,1,1,2-Tetrachloroethane	107		106		70-130	1		20
Bromobenzene	109		110		70-130	1		20
n-Butylbenzene	94		95		70-130	1		20
sec-Butylbenzene	101		101		70-130	0		20
tert-Butylbenzene	101		100		70-130	1		20
o-Chlorotoluene	98		98		70-130	0		20
p-Chlorotoluene	100		101		70-130	1		20
1,2-Dibromo-3-chloropropane	94		94		70-130	0		20
Hexachlorobutadiene	99		100		70-130	1		20
Isopropylbenzene	109		106		70-130	3		20
p-Isopropyltoluene	102		102		70-130	0		20
Naphthalene	97		98		70-130	1		20
n-Propylbenzene	102		102		70-130	0		20
1,2,3-Trichlorobenzene	102		102		70-130	0		20

Lab Control Sample Analysis
Batch Quality Control

Project Name: NBHS (PSWS)
Project Number: 115058

Lab Number: L1401726
Report Date: 04/01/14

Parameter	LCS %Recovery	Qual	LCSD %Recovery	Qual	%Recovery Limits	RPD	Qual	RPD Limits
MCP Volatile Organics - Westborough Lab Associated sample(s): 01,04,07-08,11 Batch: WG666215-1 WG666215-2								
1,2,4-Trichlorobenzene	101		102		70-130	1		20
1,3,5-Trimethylbenzene	102		102		70-130	0		20
1,2,4-Trimethylbenzene	104		104		70-130	0		20
Ethyl ether	108		108		70-130	0		20
Isopropyl Ether	96		96		70-130	0		20
Ethyl-Tert-Butyl-Ether	107		107		70-130	0		20
Tertiary-Amyl Methyl Ether	102		103		70-130	1		20
1,4-Dioxane	90		86		70-130	5		20

Surrogate	LCS %Recovery	Qual	LCSD %Recovery	Qual	Acceptance Criteria
1,2-Dichloroethane-d4	92		95		70-130
Toluene-d8	96		96		70-130
4-Bromofluorobenzene	91		92		70-130
Dibromofluoromethane	101		102		70-130

Lab Control Sample Analysis
Batch Quality Control

Project Name: NBHS (PSWS)
Project Number: 115058

Lab Number: L1401726
Report Date: 04/01/14

Parameter	LCS %Recovery	Qual	LCSD %Recovery	Qual	%Recovery Limits	RPD	Qual	RPD Limits
MCP Volatile Organics - Westborough Lab Associated sample(s): 14 Batch: WG666400-1 WG666400-2								
Methylene chloride	105		106		70-130	1		20
1,1-Dichloroethane	102		104		70-130	2		20
Chloroform	108		108		70-130	0		20
Carbon tetrachloride	96		96		70-130	0		20
1,2-Dichloropropane	104		106		70-130	2		20
Dibromochloromethane	107		108		70-130	1		20
1,1,2-Trichloroethane	108		108		70-130	0		20
Tetrachloroethene	116		114		70-130	2		20
Chlorobenzene	110		108		70-130	2		20
Trichlorofluoromethane	105		104		70-130	1		20
1,2-Dichloroethane	103		105		70-130	2		20
1,1,1-Trichloroethane	114		116		70-130	2		20
Bromodichloromethane	106		107		70-130	1		20
trans-1,3-Dichloropropene	99		99		70-130	0		20
cis-1,3-Dichloropropene	102		103		70-130	1		20
1,1-Dichloropropene	108		108		70-130	0		20
Bromoform	102		106		70-130	4		20
1,1,2,2-Tetrachloroethane	100		102		70-130	2		20
Benzene	108		109		70-130	1		20
Toluene	106		103		70-130	3		20
Ethylbenzene	108		107		70-130	1		20

Lab Control Sample Analysis
Batch Quality Control

Project Name: NBHS (PSWS)
Project Number: 115058

Lab Number: L1401726
Report Date: 04/01/14

Parameter	LCS %Recovery	Qual	LCSD %Recovery	Qual	%Recovery Limits	RPD	Qual	RPD Limits
MCP Volatile Organics - Westborough Lab Associated sample(s): 14 Batch: WG666400-1 WG666400-2								
Chloromethane	96		96		70-130	0		20
Bromomethane	101		104		70-130	3		20
Vinyl chloride	104		104		70-130	0		20
Chloroethane	104		104		70-130	0		20
1,1-Dichloroethene	112		113		70-130	1		20
trans-1,2-Dichloroethene	111		111		70-130	0		20
Trichloroethene	109		110		70-130	1		20
1,2-Dichlorobenzene	108		109		70-130	1		20
1,3-Dichlorobenzene	106		107		70-130	1		20
1,4-Dichlorobenzene	107		107		70-130	0		20
Methyl tert butyl ether	108		110		70-130	2		20
p/m-Xylene	104		102		70-130	2		20
o-Xylene	105		105		70-130	0		20
cis-1,2-Dichloroethene	108		109		70-130	1		20
Dibromomethane	110		111		70-130	1		20
1,2,3-Trichloropropane	98		99		70-130	1		20
Styrene	114		113		70-130	1		20
Dichlorodifluoromethane	117		114		70-130	3		20
Acetone	122		113		70-130	8		20
Carbon disulfide	97		96		70-130	1		20
2-Butanone	106		99		70-130	7		20

Lab Control Sample Analysis
Batch Quality Control

Project Name: NBHS (PSWS)
Project Number: 115058

Lab Number: L1401726
Report Date: 04/01/14

Parameter	LCS %Recovery	Qual	LCSD %Recovery	Qual	%Recovery Limits	RPD	Qual	RPD Limits
MCP Volatile Organics - Westborough Lab Associated sample(s): 14 Batch: WG666400-1 WG666400-2								
4-Methyl-2-pentanone	92		96		70-130	4		20
2-Hexanone	91		88		70-130	3		20
Bromochloromethane	117		119		70-130	2		20
Tetrahydrofuran	94		92		70-130	2		20
2,2-Dichloropropane	114		114		70-130	0		20
1,2-Dibromoethane	108		107		70-130	1		20
1,3-Dichloropropane	106		104		70-130	2		20
1,1,1,2-Tetrachloroethane	106		106		70-130	0		20
Bromobenzene	110		110		70-130	0		20
n-Butylbenzene	93		93		70-130	0		20
sec-Butylbenzene	100		101		70-130	1		20
tert-Butylbenzene	99		100		70-130	1		20
o-Chlorotoluene	97		98		70-130	1		20
p-Chlorotoluene	100		101		70-130	1		20
1,2-Dibromo-3-chloropropane	90		93		70-130	3		20
Hexachlorobutadiene	99		100		70-130	1		20
Isopropylbenzene	108		107		70-130	1		20
p-Isopropyltoluene	102		102		70-130	0		20
Naphthalene	97		97		70-130	0		20
n-Propylbenzene	102		103		70-130	1		20
1,2,3-Trichlorobenzene	102		103		70-130	1		20

Lab Control Sample Analysis
Batch Quality Control

Project Name: NBHS (PSWS)
Project Number: 115058

Lab Number: L1401726
Report Date: 04/01/14

Parameter	LCS %Recovery	Qual	LCSD %Recovery	Qual	%Recovery Limits	RPD	Qual	RPD Limits
MCP Volatile Organics - Westborough Lab Associated sample(s): 14 Batch: WG666400-1 WG666400-2								
1,2,4-Trichlorobenzene	100		101		70-130	1		20
1,3,5-Trimethylbenzene	101		102		70-130	1		20
1,2,4-Trimethylbenzene	103		103		70-130	0		20
Ethyl ether	110		112		70-130	2		20
Isopropyl Ether	96		96		70-130	0		20
Ethyl-Tert-Butyl-Ether	108		109		70-130	1		20
Tertiary-Amyl Methyl Ether	102		104		70-130	2		20
1,4-Dioxane	106		102		70-130	4		20

Surrogate	LCS %Recovery	Qual	LCSD %Recovery	Qual	Acceptance Criteria
1,2-Dichloroethane-d4	93		94		70-130
Toluene-d8	98		96		70-130
4-Bromofluorobenzene	92		91		70-130
Dibromofluoromethane	101		103		70-130

PCBS

Project Name: NBHS (PSWS)
Project Number: 115058

Lab Number: L1401726
Report Date: 04/01/14

SAMPLE RESULTS

Lab ID:	L1401726-01	Date Collected:	01/16/14 14:50
Client ID:	MW-28	Date Received:	01/17/14
Sample Location:	NEW BEDFORD, MA	Field Prep:	See Narrative
Matrix:	Water	Extraction Method:	EPA 3510C
Analytical Method:	97,8082	Extraction Date:	01/18/14 11:46
Analytical Date:	01/20/14 17:24	Cleanup Method1:	EPA 3665A
Analyst:	JT	Cleanup Date1:	01/19/14
		Cleanup Method2:	EPA 3660B
		Cleanup Date2:	01/19/14

Parameter	Result	Qualifier	Units	RL	MDL	Dilution Factor	Column
MCP Polychlorinated Biphenyls - Westborough Lab							
Aroclor 1016	ND		ug/l	0.250	--	1	A
Aroclor 1221	ND		ug/l	0.250	--	1	A
Aroclor 1232	ND		ug/l	0.250	--	1	A
Aroclor 1242	ND		ug/l	0.250	--	1	A
Aroclor 1248	ND		ug/l	0.250	--	1	A
Aroclor 1254	ND		ug/l	0.250	--	1	A
Aroclor 1260	ND		ug/l	0.250	--	1	A
Aroclor 1262	ND		ug/l	0.250	--	1	A
Aroclor 1268	ND		ug/l	0.250	--	1	A

Surrogate	% Recovery	Qualifier	Acceptance Criteria	Column
2,4,5,6-Tetrachloro-m-xylene	90		30-150	A
Decachlorobiphenyl	88		30-150	A
2,4,5,6-Tetrachloro-m-xylene	88		30-150	B
Decachlorobiphenyl	72		30-150	B

Project Name: NBHS (PSWS)
Project Number: 115058

Lab Number: L1401726
Report Date: 04/01/14

SAMPLE RESULTS

Lab ID:	L1401726-02 D	Date Collected:	01/16/14 14:50
Client ID:	MW-28 (FILTERED 2)	Date Received:	01/17/14
Sample Location:	NEW BEDFORD, MA	Field Prep:	Not Specified
Matrix:	Water	Extraction Method:	EPA 3510C
Analytical Method:	97,8082	Extraction Date:	01/18/14 11:46
Analytical Date:	01/23/14 15:50	Cleanup Method1:	EPA 3665A
Analyst:	JT	Cleanup Date1:	01/19/14
		Cleanup Method2:	EPA 3660B
		Cleanup Date2:	01/19/14

Parameter	Result	Qualifier	Units	RL	MDL	Dilution Factor	Column
MCP Polychlorinated Biphenyls - Westborough Lab							
Aroclor 1016	ND		ug/l	1.25	--	5	A
Aroclor 1221	ND		ug/l	1.25	--	5	A
Aroclor 1232	ND		ug/l	1.25	--	5	A
Aroclor 1242	ND		ug/l	1.25	--	5	A
Aroclor 1248	ND		ug/l	1.25	--	5	A
Aroclor 1254	8.93		ug/l	1.25	--	5	A
Aroclor 1260	ND		ug/l	1.25	--	5	A
Aroclor 1262	ND		ug/l	1.25	--	5	A
Aroclor 1268	ND		ug/l	1.25	--	5	A

Surrogate	% Recovery	Qualifier	Acceptance Criteria	Column
2,4,5,6-Tetrachloro-m-xylene	89		30-150	A
Decachlorobiphenyl	99		30-150	A
2,4,5,6-Tetrachloro-m-xylene	78		30-150	B
Decachlorobiphenyl	108		30-150	B

Project Name: NBHS (PSWS)
Project Number: 115058

Lab Number: L1401726
Report Date: 04/01/14

SAMPLE RESULTS

Lab ID:	L1401726-04	Date Collected:	01/16/14 15:00
Client ID:	DUP-1	Date Received:	01/17/14
Sample Location:	NEW BEDFORD, MA	Field Prep:	See Narrative
Matrix:	Water	Extraction Method:	EPA 3510C
Analytical Method:	97,8082	Extraction Date:	01/18/14 11:46
Analytical Date:	01/20/14 18:10	Cleanup Method1:	EPA 3665A
Analyst:	JT	Cleanup Date1:	01/19/14
		Cleanup Method2:	EPA 3660B
		Cleanup Date2:	01/19/14

Parameter	Result	Qualifier	Units	RL	MDL	Dilution Factor	Column
MCP Polychlorinated Biphenyls - Westborough Lab							
Aroclor 1016	ND		ug/l	0.250	--	1	A
Aroclor 1221	ND		ug/l	0.250	--	1	A
Aroclor 1232	ND		ug/l	0.250	--	1	A
Aroclor 1242	ND		ug/l	0.250	--	1	A
Aroclor 1248	ND		ug/l	0.250	--	1	A
Aroclor 1254	ND		ug/l	0.250	--	1	A
Aroclor 1260	ND		ug/l	0.250	--	1	A
Aroclor 1262	ND		ug/l	0.250	--	1	A
Aroclor 1268	ND		ug/l	0.250	--	1	A

Surrogate	% Recovery	Qualifier	Acceptance Criteria	Column
2,4,5,6-Tetrachloro-m-xylene	93		30-150	A
Decachlorobiphenyl	91		30-150	A
2,4,5,6-Tetrachloro-m-xylene	91		30-150	B
Decachlorobiphenyl	76		30-150	B

Project Name: NBHS (PSWS) **Lab Number:** L1401726

Project Number: 115058 **Report Date:** 04/01/14

SAMPLE RESULTS

Lab ID:	L1401726-05 D	Date Collected:	01/16/14 15:00
Client ID:	DUP-1 (FILTERED 2)	Date Received:	01/17/14
Sample Location:	NEW BEDFORD, MA	Field Prep:	Not Specified
Matrix:	Water	Extraction Method:	EPA 3510C
Analytical Method:	97,8082	Extraction Date:	01/18/14 11:46
Analytical Date:	01/23/14 16:29	Cleanup Method1:	EPA 3665A
Analyst:	JT	Cleanup Date1:	01/19/14
		Cleanup Method2:	EPA 3660B
		Cleanup Date2:	01/19/14

Parameter	Result	Qualifier	Units	RL	MDL	Dilution Factor	Column
MCP Polychlorinated Biphenyls - Westborough Lab							
Aroclor 1016	ND		ug/l	1.25	--	5	A
Aroclor 1221	ND		ug/l	1.25	--	5	A
Aroclor 1232	ND		ug/l	1.25	--	5	A
Aroclor 1242	ND		ug/l	1.25	--	5	A
Aroclor 1248	ND		ug/l	1.25	--	5	A
Aroclor 1254	9.33		ug/l	1.25	--	5	B
Aroclor 1260	ND		ug/l	1.25	--	5	A
Aroclor 1262	ND		ug/l	1.25	--	5	A
Aroclor 1268	ND		ug/l	1.25	--	5	A

Surrogate	% Recovery	Qualifier	Acceptance Criteria	Column
2,4,5,6-Tetrachloro-m-xylene	99		30-150	A
Decachlorobiphenyl	95		30-150	A
2,4,5,6-Tetrachloro-m-xylene	94		30-150	B
Decachlorobiphenyl	111		30-150	B

Project Name: NBHS (PSWS)
Project Number: 115058

Lab Number: L1401726
Report Date: 04/01/14

SAMPLE RESULTS

Lab ID:	L1401726-08	Date Collected:	01/17/14 12:00
Client ID:	MW-41	Date Received:	01/17/14
Sample Location:	NEW BEDFORD, MA	Field Prep:	See Narrative
Matrix:	Water	Extraction Method:	EPA 3510C
Analytical Method:	97,8082	Extraction Date:	01/18/14 11:46
Analytical Date:	01/20/14 18:56	Cleanup Method1:	EPA 3665A
Analyst:	JT	Cleanup Date1:	01/19/14
		Cleanup Method2:	EPA 3660B
		Cleanup Date2:	01/19/14

Parameter	Result	Qualifier	Units	RL	MDL	Dilution Factor	Column
MCP Polychlorinated Biphenyls - Westborough Lab							
Aroclor 1016	ND		ug/l	0.250	--	1	A
Aroclor 1221	ND		ug/l	0.250	--	1	A
Aroclor 1232	ND		ug/l	0.250	--	1	A
Aroclor 1242	ND		ug/l	0.250	--	1	A
Aroclor 1248	ND		ug/l	0.250	--	1	A
Aroclor 1254	1.59		ug/l	0.250	--	1	B
Aroclor 1260	ND		ug/l	0.250	--	1	A
Aroclor 1262	ND		ug/l	0.250	--	1	A
Aroclor 1268	ND		ug/l	0.250	--	1	A

Surrogate	% Recovery	Qualifier	Acceptance Criteria	Column
2,4,5,6-Tetrachloro-m-xylene	93		30-150	A
Decachlorobiphenyl	82		30-150	A
2,4,5,6-Tetrachloro-m-xylene	92		30-150	B
Decachlorobiphenyl	69		30-150	B

Project Name: NBHS (PSWS)
Project Number: 115058

Lab Number: L1401726
Report Date: 04/01/14

SAMPLE RESULTS

Lab ID:	L1401726-09	Date Collected:	01/17/14 12:00
Client ID:	MW-41 (FILTERED 2)	Date Received:	01/17/14
Sample Location:	NEW BEDFORD, MA	Field Prep:	Not Specified
Matrix:	Water	Extraction Method:	EPA 3510C
Analytical Method:	97,8082	Extraction Date:	01/18/14 11:46
Analytical Date:	01/20/14 19:11	Cleanup Method1:	EPA 3665A
Analyst:	JT	Cleanup Date1:	01/19/14
		Cleanup Method2:	EPA 3660B
		Cleanup Date2:	01/19/14

Parameter	Result	Qualifier	Units	RL	MDL	Dilution Factor	Column
MCP Polychlorinated Biphenyls - Westborough Lab							
Aroclor 1016	ND		ug/l	0.250	--	1	A
Aroclor 1221	ND		ug/l	0.250	--	1	A
Aroclor 1232	ND		ug/l	0.250	--	1	A
Aroclor 1242	ND		ug/l	0.250	--	1	A
Aroclor 1248	ND		ug/l	0.250	--	1	A
Aroclor 1254	3.25		ug/l	0.250	--	1	B
Aroclor 1260	ND		ug/l	0.250	--	1	A
Aroclor 1262	ND		ug/l	0.250	--	1	A
Aroclor 1268	ND		ug/l	0.250	--	1	A

Surrogate	% Recovery	Qualifier	Acceptance Criteria	Column
2,4,5,6-Tetrachloro-m-xylene	96		30-150	A
Decachlorobiphenyl	75		30-150	A
2,4,5,6-Tetrachloro-m-xylene	91		30-150	B
Decachlorobiphenyl	64		30-150	B

Project Name: NBHS (PSWS)
Project Number: 115058

Lab Number: L1401726
Report Date: 04/01/14

SAMPLE RESULTS

Lab ID:	L1401726-11	Date Collected:	01/17/14 16:20
Client ID:	MW-40	Date Received:	01/17/14
Sample Location:	NEW BEDFORD, MA	Field Prep:	See Narrative
Matrix:	Water	Extraction Method:	EPA 3510C
Analytical Method:	97,8082	Extraction Date:	01/18/14 11:47
Analytical Date:	01/20/14 20:43	Cleanup Method1:	EPA 3665A
Analyst:	JT	Cleanup Date1:	01/19/14
		Cleanup Method2:	EPA 3660B
		Cleanup Date2:	01/19/14

Parameter	Result	Qualifier	Units	RL	MDL	Dilution Factor	Column
MCP Polychlorinated Biphenyls - Westborough Lab							
Aroclor 1016	ND		ug/l	0.250	--	1	A
Aroclor 1221	ND		ug/l	0.250	--	1	A
Aroclor 1232	ND		ug/l	0.250	--	1	A
Aroclor 1242	ND		ug/l	0.250	--	1	A
Aroclor 1248	ND		ug/l	0.250	--	1	A
Aroclor 1254	ND		ug/l	0.250	--	1	A
Aroclor 1260	ND		ug/l	0.250	--	1	A
Aroclor 1262	ND		ug/l	0.250	--	1	A
Aroclor 1268	ND		ug/l	0.250	--	1	A

Surrogate	% Recovery	Qualifier	Acceptance Criteria	Column
2,4,5,6-Tetrachloro-m-xylene	95		30-150	A
Decachlorobiphenyl	105		30-150	A
2,4,5,6-Tetrachloro-m-xylene	92		30-150	B
Decachlorobiphenyl	91		30-150	B

Project Name: NBHS (PSWS)

Project Number: 115058

Lab Number: L1401726

Report Date: 04/01/14

Method Blank Analysis
Batch Quality Control

Analytical Method: 97,8082
Analytical Date: 01/20/14 19:42
Analyst: JT

Extraction Method: EPA 3510C
Extraction Date: 01/18/14 11:46
Cleanup Method1: EPA 3665A
Cleanup Date1: 01/19/14
Cleanup Method2: EPA 3660B
Cleanup Date2: 01/19/14

Parameter	Result	Qualifier	Units	RL	MDL	Column
MCP Polychlorinated Biphenyls - Westborough Lab for sample(s): 01-02,04-05,08-09,11 Batch: WG665540-1						
Aroclor 1016	ND		ug/l	0.250	--	A
Aroclor 1221	ND		ug/l	0.250	--	A
Aroclor 1232	ND		ug/l	0.250	--	A
Aroclor 1242	ND		ug/l	0.250	--	A
Aroclor 1248	ND		ug/l	0.250	--	A
Aroclor 1254	ND		ug/l	0.250	--	A
Aroclor 1260	ND		ug/l	0.250	--	A
Aroclor 1262	ND		ug/l	0.250	--	A
Aroclor 1268	ND		ug/l	0.250	--	A

Surrogate	%Recovery	Qualifier	Acceptance Criteria	Column
2,4,5,6-Tetrachloro-m-xylene	74		30-150	B
2,4,5,6-Tetrachloro-m-xylene	76		30-150	A
Decachlorobiphenyl	95		30-150	A
Decachlorobiphenyl	80		30-150	B

Lab Control Sample Analysis

Batch Quality Control

Project Name: NBHS (PSWS)

Project Number: 115058

Lab Number: L1401726

Report Date: 04/01/14

Parameter	LCS %Recovery	Qual	LCSD %Recovery	Qual	%Recovery Limits	RPD	Qual	RPD Limits	Column
MCP Polychlorinated Biphenyls - Westborough Lab Associated sample(s): 01-02,04-05,08-09,11 Batch: WG665540-2 WG665540-3									
Aroclor 1016	89		100		40-140	12		20	A
Aroclor 1260	93		104		40-140	11		20	A

Surrogate	LCS %Recovery	Qual	LCSD %Recovery	Qual	Acceptance Criteria	Column
2,4,5,6-Tetrachloro-m-xylene	74		76		30-150	A
Decachlorobiphenyl	95		105		30-150	A
2,4,5,6-Tetrachloro-m-xylene	70		73		30-150	B
Decachlorobiphenyl	80		90		30-150	B

Project Name: NBHS (PSWS)
Project Number: 115058

Lab Number: L1401726
Report Date: 04/01/14

Sample Receipt and Container Information

Were project specific reporting limits specified? YES

Reagent H2O Preserved Vials Frozen on: NA

Cooler Information Custody Seal

Cooler	
A	Absent
B	Absent

Container Information

Container ID	Container Type	Cooler	pH	Temp deg C	Pres	Seal	Analysis(*)
L1401726-01A	Vial HCl preserved	B	N/A	3.4	Y	Absent	MCP-8260-10(14)
L1401726-01B	Vial HCl preserved	B	N/A	3.4	Y	Absent	MCP-8260-10(14)
L1401726-01C	Vial HCl preserved	B	N/A	3.4	Y	Absent	MCP-8260-10(14)
L1401726-01D	Amber 1000ml unpreserved	B	7	3.4	Y	Absent	MCP-8082-10(365)
L1401726-01E	Amber 1000ml unpreserved	B	7	3.4	Y	Absent	MCP-8082-10(365)
L1401726-02A	Amber 1000ml unpreserved	B	7	3.4	Y	Absent	FILTER-EXT(1)
L1401726-02B	Amber 1000ml unpreserved	B	7	3.4	Y	Absent	FILTER-EXT(1)
L1401726-02X	Amber 1000ml unpreserved split	B	N/A	3.4	Y	Absent	MCP-8082-10(365)
L1401726-02Y	Amber 1000ml unpreserved split	B	N/A	3.4	Y	Absent	MCP-8082-10(365)
L1401726-03A	Amber 1000ml unpreserved	B	7	3.4	Y	Absent	HOLD(14)
L1401726-03B	Amber 1000ml unpreserved	B	7	3.4	Y	Absent	HOLD(14)
L1401726-03X	Amber 1000ml unpreserved split	B	N/A	3.4	Y	Absent	-
L1401726-03Y	Amber 1000ml unpreserved split	B	N/A	3.4	Y	Absent	-
L1401726-04A	Vial HCl preserved	B	N/A	3.4	Y	Absent	MCP-8260-10(14)
L1401726-04B	Vial HCl preserved	B	N/A	3.4	Y	Absent	MCP-8260-10(14)
L1401726-04C	Vial HCl preserved	B	N/A	3.4	Y	Absent	MCP-8260-10(14)
L1401726-04D	Amber 1000ml unpreserved	B	7	3.4	Y	Absent	MCP-8082-10(365)
L1401726-04E	Amber 1000ml unpreserved	B	7	3.4	Y	Absent	MCP-8082-10(365)
L1401726-05A	Amber 1000ml unpreserved	B	7	3.4	Y	Absent	FILTER-EXT(1)
L1401726-05B	Amber 1000ml unpreserved	B	7	3.4	Y	Absent	FILTER-EXT(1)
L1401726-05X	Amber 1000ml unpreserved split	B	N/A	3.4	Y	Absent	MCP-8082-10(365)
L1401726-05Y	Amber 1000ml unpreserved split	B	N/A	3.4	Y	Absent	MCP-8082-10(365)
L1401726-06A	Amber 1000ml unpreserved	B	7	3.4	Y	Absent	HOLD(14)
L1401726-06B	Amber 1000ml unpreserved	B	7	3.4	Y	Absent	HOLD(14)
L1401726-06X	Amber 1000ml unpreserved split	B	N/A	3.4	Y	Absent	-
L1401726-06Y	Amber 1000ml unpreserved split	B	N/A	3.4	Y	Absent	-

*Values in parentheses indicate holding time in days

Project Name: NBHS (PSWS)
Project Number: 115058

Lab Number: L1401726
Report Date: 04/01/14

Container Information

Container ID	Container Type	Cooler	pH	Temp deg C	Pres	Seal	Analysis(*)
L1401726-07A	Vial HCl preserved	B	N/A	3.4	Y	Absent	MCP-8260-10(14)
L1401726-07B	Vial HCl preserved	B	N/A	3.4	Y	Absent	MCP-8260-10(14)
L1401726-07C	Vial HCl preserved	B	N/A	3.4	Y	Absent	MCP-8260-10(14)
L1401726-08A	Vial HCl preserved	B	N/A	3.4	Y	Absent	MCP-8260-10(14)
L1401726-08B	Vial HCl preserved	B	N/A	3.4	Y	Absent	MCP-8260-10(14)
L1401726-08C	Vial HCl preserved	B	N/A	3.4	Y	Absent	MCP-8260-10(14)
L1401726-08D	Amber 1000ml unpreserved	A	7	4.6	Y	Absent	MCP-8082-10(365)
L1401726-08E	Amber 1000ml unpreserved	A	7	4.6	Y	Absent	MCP-8082-10(365)
L1401726-09A	Amber 1000ml unpreserved	A	7	4.6	Y	Absent	FILTER-EXT(1)
L1401726-09B	Amber 1000ml unpreserved	A	7	4.6	Y	Absent	FILTER-EXT(1)
L1401726-09X	Amber 1000ml unpreserved split	A	N/A	4.6	Y	Absent	MCP-8082-10(365)
L1401726-09Y	Amber 1000ml unpreserved split	A	N/A	4.6	Y	Absent	MCP-8082-10(365)
L1401726-10A	Amber 1000ml unpreserved	A	7	4.6	Y	Absent	-
L1401726-10B	Amber 1000ml unpreserved	A	7	4.6	Y	Absent	-
L1401726-10X	Amber 1000ml unpreserved split	A	N/A	4.6	Y	Absent	HOLD(14)
L1401726-10Y	Amber 1000ml unpreserved split	A	N/A	4.6	Y	Absent	HOLD(14)
L1401726-11A	Vial HCl preserved	B	N/A	3.4	Y	Absent	MCP-8260-10(14)
L1401726-11B	Vial HCl preserved	B	N/A	3.4	Y	Absent	MCP-8260-10(14)
L1401726-11C	Vial HCl preserved	B	N/A	3.4	Y	Absent	MCP-8260-10(14)
L1401726-11D	Amber 1000ml unpreserved	A	7	4.6	Y	Absent	MCP-8082-10(365)
L1401726-11E	Amber 1000ml unpreserved	A	7	4.6	Y	Absent	MCP-8082-10(365)
L1401726-12A	Amber 1000ml unpreserved	A	7	4.6	Y	Absent	HOLD-8082()
L1401726-12B	Amber 1000ml unpreserved	A	7	4.6	Y	Absent	HOLD-8082()
L1401726-13A	Amber 1000ml unpreserved	A	7	4.6	Y	Absent	HOLD-8082()
L1401726-13B	Amber 1000ml unpreserved	A	7	4.6	Y	Absent	HOLD-8082()
L1401726-14A	Vial HCl preserved	B	N/A	3.4	Y	Absent	MCP-8260-10(14)

Container Comments

L1401726-03Y

L1401726-10Y

L1401726-12A

*Values in parentheses indicate holding time in days

Project Name:	NBHS (PSWS)	**Lab Number:**	L1401726
Project Number:	115058	**Report Date:**	04/01/14

GLOSSARY

Acronyms

EDL	- Estimated Detection Limit: This value represents the level to which target analyte concentrations are reported as estimated values, when those target analyte concentrations are quantified below the reporting limit (RL). The EDL includes any adjustments from dilutions, concentrations or moisture content, where applicable. The use of EDLs is specific to the analysis of PAHs using Solid-Phase Microextraction (SPME).
EPA	- Environmental Protection Agency.
LCS	- Laboratory Control Sample: A sample matrix, free from the analytes of interest, spiked with verified known amounts of analytes or a material containing known and verified amounts of analytes.
LCSD	- Laboratory Control Sample Duplicate: Refer to LCS.
LFB	- Laboratory Fortified Blank: A sample matrix, free from the analytes of interest, spiked with verified known amounts of analytes or a material containing known and verified amounts of analytes.
MDL	- Method Detection Limit: This value represents the level to which target analyte concentrations are reported as estimated values, when those target analyte concentrations are quantified below the reporting limit (RL). The MDL includes any adjustments from dilutions, concentrations or moisture content, where applicable.
MS	- Matrix Spike Sample: A sample prepared by adding a known mass of target analyte to a specified amount of matrix sample for which an independent estimate of target analyte concentration is available.
MSD	- Matrix Spike Sample Duplicate: Refer to MS.
NA	- Not Applicable.
NC	- Not Calculated: Term is utilized when one or more of the results utilized in the calculation are non-detect at the parameter's reporting unit.
NI	- Not Ignitable.
RL	- Reporting Limit: The value at which an instrument can accurately measure an analyte at a specific concentration. The RL includes any adjustments from dilutions, concentrations or moisture content, where applicable.
RPD	- Relative Percent Difference: The results from matrix and/or matrix spike duplicates are primarily designed to assess the precision of analytical results in a given matrix and are expressed as relative percent difference (RPD). Values which are less than five times the reporting limit for any individual parameter are evaluated by utilizing the absolute difference between the values; although the RPD value will be provided in the report.
SRM	- Standard Reference Material: A reference sample of a known or certified value that is of the same or similar matrix as the associated field samples.

Footnotes

1	- The reference for this analyte should be considered modified since this analyte is absent from the target analyte list of the original method.

Terms

Analytical Method: Both the document from which the method originates and the analytical reference method. (Example: EPA 8260B is shown as 1,8260B.) The codes for the reference method documents are provided in the References section of the Addendum.

Data Qualifiers

A	- Spectra identified as "Aldol Condensation Product".
B	- The analyte was detected above the reporting limit in the associated method blank. Flag only applies to associated field samples that have detectable concentrations of the analyte at less than ten times (10x) the concentration found in the blank. For MCP-related projects, flag only applies to associated field samples that have detectable concentrations of the analyte at less than ten times (10x) the concentration found in the blank. For DOD-related projects, flag only applies to associated field samples that have detectable concentrations of the analyte at less than ten times (10x) the concentration found in the blank AND the analyte was detected above one-half the reporting limit (or above the reporting limit for common lab contaminants) in the associated method blank. For NJ-Air-related projects, flag only applies to associated field samples that have detectable concentrations of the analyte above the reporting limit.
C	- Co-elution: The target analyte co-elutes with a known lab standard (i.e. surrogate, internal standards, etc.) for co-extracted analyses.
D	- Concentration of analyte was quantified from diluted analysis. Flag only applies to field samples that have detectable concentrations of the analyte.
E	- Concentration of analyte exceeds the range of the calibration curve and/or linear range of the instrument.
G	- The concentration may be biased high due to matrix interferences (i.e, co-elution) with non-target compound(s). The result should be considered estimated.
H	- The analysis of pH was performed beyond the regulatory-required holding time of 15 minutes from the time of sample collection.
I	- The lower value for the two columns has been reported due to obvious interference.

Report Format: Data Usability Report

Project Name:	NBHS (PSWS)	**Lab Number:**	L1401726
Project Number:	115058	**Report Date:**	04/01/14

Data Qualifiers

M - Reporting Limit (RL) exceeds the MCP CAM Reporting Limit for this analyte.

NJ - Presumptive evidence of compound. This represents an estimated concentration for Tentatively Identified Compounds (TICs), where the identification is based on a mass spectral library search.

P - The RPD between the results for the two columns exceeds the method-specified criteria.

Q - The quality control sample exceeds the associated acceptance criteria. For DOD-related projects, LCS and/or Continuing Calibration Standard exceedences are also qualified on all associated sample results. Note: This flag is not applicable for matrix spike recoveries when the sample concentration is greater than 4x the spike added or for batch duplicate RPD when the sample concentrations are less than 5x the RL. (Metals only.)

R - Analytical results are from sample re-analysis.

RE - Analytical results are from sample re-extraction.

S - Analytical results are from modified screening analysis.

J - Estimated value. This represents an estimated concentration for Tentatively Identified Compounds (TICs).

ND - Not detected at the reporting limit (RL) for the sample.

Report Format: Data Usability Report

Project Name: NBHS (PSWS) **Lab Number:** L1401726
Project Number: 115058 **Report Date:** 04/01/14

REFERENCES

97 EPA Test Methods (SW-846) with QC Requirements & Performance Standards for the Analysis of EPA SW-846 Methods under the Massachusetts Contingency Plan, WSC-CAM-IIA, IIB, IIIA, IIIB, IIIC, IIID, VA, VB, VC, VIA, VIB, VIIIA and VIIIB, July 2010.

LIMITATION OF LIABILITIES

Alpha Analytical performs services with reasonable care and diligence normal to the analytical testing laboratory industry. In the event of an error, the sole and exclusive responsibility of Alpha Analytical shall be to re-perform the work at it's own expense. In no event shall Alpha Analytical be held liable for any incidental, consequential or special damages, including but not limited to, damages in any way connected with the use of, interpretation of, information or analysis provided by Alpha Analytical.

We strongly urge our clients to comply with EPA protocol regarding sample volume, preservation, cooling, containers, sampling procedures, holding time and splitting of samples in the field.

Certification Information

Last revised December 11, 2013

The following analytes are not included in our NELAP Scope of Accreditation:

Westborough Facility
EPA 524.2: Acetone, 2-Butanone (Methyl ethyl ketone (MEK)), Tert-butyl alcohol, 2-Hexanone, Tetrahydrofuran, 1,3,5-Trichlorobenzene, 4-Methyl-2-pentanone (MIBK), Carbon disulfide, Diethyl ether.
EPA 8260C: 1,2,4,5-Tetramethylbenzene, 4-Ethyltoluene, Iodomethane (methyl iodide), Methyl methacrylate, Azobenzene.
EPA 8330A/B: PETN, Picric Acid, Nitroglycerine, 2,6-DANT, 2,4-DANT.
EPA 8270D: 1-Methylnaphthalene, Dimethylnaphthalene,1,4-Diphenylhydrazine.
EPA 625: 4-Chloroaniline, 4-Methylphenol.
SM4500: Soil: Total Phosphorus, TKN, NO2, NO3.
EPA 9071: Total Petroleum Hydrocarbons, Oil & Grease.

Mansfield Facility
EPA 8270D: Biphenyl.
EPA TO-15: Halothane, 2,4,4-Trimethyl-2-pentene, 2,4,4-Trimethyl-1-pentene, Thiophene, 2-Methylthiophene, 3-Methylthiophene, 2-Ethylthiophene, 1,2,3-Trimethylbenzene, Indan, Indene, 1,2,4,5-Tetramethylbenzene, Benzothiophene, 1-Methylnaphthalene.

The following analytes are included in our Massachusetts DEP Scope of Accreditation, Westborough Facility:

Drinking Water
EPA 200.8: Sb,As,Ba,Be,Cd,Cr,Cu,Pb,Ni,Se,Tl; **EPA 200.7**: Ba,Be,Ca,Cd,Cr,Cu,Na; **EPA 245.1:** Mercury;
EPA 300.0: Nitrate-N, Fluoride, Sulfate; **EPA 353.2**: Nitrate-N, Nitrite-N; **SM4500NO3-F**: Nitrate-N, Nitrite-N; **SM4500F-C, SM4500CN-CE, EPA 180.1, SM2130B, SM4500Cl-D, SM2320B, SM2540C, SM4500H-B**
EPA 332: Perchlorate.
Microbiology: **SM9215B; SM9223-P/A, SM9223B-Colilert-QT, Enterolert-QT.**

Non-Potable Water
EPA 200.8: Al,Sb,As,Be,Cd,Cr,Cu,Pb,Mn,Ni,Se,Ag,Tl,Zn;
EPA 200.7: Al,Sb,As,Be,Cd,Ca,Cr,Co,Cu,Fe,Pb,Mg,Mn,Mo,Ni,K,Se,Ag,Na,Sr,Ti,Tl,V,Zn;
EPA 245.1, SM4500H,B, EPA 120.1, SM2510B, SM2540C, SM2340B, SM2320B, SM4500CL-E, SM4500F-BC, SM426C, SM4500NH3-BH, **EPA 350.1**: Ammonia-N, **LACHAT 10-107-06-1-B**: Ammonia-N, **SM4500NO3-F,**
EPA 353.2: Nitrate-N**, SM4500NH3-BC-NES, EPA 351.1, SM4500P-E, SM4500P-B, E, SM5220D, EPA 410.4, SM5210B, SM5310C, SM4500CL-D, EPA 1664, SM14 510AC, EPA 420.1, SM4500-CN-CE, SM2540D.**
EPA 624: Volatile Halocarbons & Aromatics,
EPA 608: Chlordane, Toxaphene, Aldrin, alpha-BHC, beta-BHC, gamma-BHC, delta-BHC, Dieldrin, DDD, DDE, DDT, Endosulfan I, Endosulfan II, Endosulfan sulfate, Endrin, Endrin Aldehyde, Heptachlor, Heptachlor Epoxide, PCBs
EPA 625: SVOC (Acid/Base/Neutral Extractables), **EPA 600/4-81-045**: PCB-Oil.
Microbiology: **SM9223B-Colilert-QT; Enterolert-QT, SM9222D-MF**.

For a complete listing of analytes and methods, please contact your Alpha Project Manager.

revised 1/24/14 CW

Serial_No:04011415:40

CHAIN OF CUSTODY

PAGE 1 OF 1

Date Rec'd in Lab: 1/17/14

ALPHA Job #: L1401726

ALPHA ANALYTICAL — World Class Chemistry

8 Walkup Drive, Westboro, MA 01581, Tel: 508-898-9220
320 Forbes Blvd, Mansfield, MA 02048, Tel: 508-822-9300

Client Information

Client: TRC
Address: 650 Suffolk St. Lowell, MA 01854
Phone: 978-970-5600
Email: dsullivan, aleonard @trcsolutions.com

Additional Project Information:

Project Information

Project Name: NBHS (PSWS)
Project Location: New Bedford, MA
Project #: 115058
Project Manager: Al Leonard, David Sullivan
ALPHA Quote #:

Turn-Around Time

☒ Standard ☐ RUSH (only confirmed if pre-approved!)

Date Due: 1/24/14

Report Information - Data Deliverables

☐ ADEx ☒ EMAIL

Billing Information

☒ Same as Client info PO #:

Regulatory Requirements & Project Information Requirements

☒ Yes ☐ No MA MCP Analytical Methods
☐ Yes ☐ No CT RCP Analytical Methods
☐ Yes ☐ No Matrix Spike Required on this SDG? (Required for MCP Inorganics)
☐ Yes ☐ No GW1 Standards (Info Required for Metals & EPH with Targets)
☐ Yes ☐ No NPDES RGP
☐ Other State /Fed Program MA Criteria MCP

ANALYSIS: VOC: ☒ 8260 ☐ 624 ☐ 524.2; SVOC: ☐ ABN ☐ PAH; METALS: ☐ MCP 13 ☐ MCP 14 ☐ RCP 15; METALS: ☐ RCRA5 ☐ RCRA8 ☐ PP13; EPH: ☐ Ranges & Targets ☐ Ranges Only; VPH: ☐ Ranges & Targets ☐ Ranges Only; ☐ PCB ☐ PEST; TPH: ☐ Quant Only ☐ Fingerprint; PCB (2µm lab-filtered); PCB (0.2µm lab-filtered); PCB (0.45µm field-filtered)

SAMPLE INFO: Filtration ☒ Field ☒ Lab to do; Preservation ☐ Lab to do

ALPHA Lab ID (Lab Use Only)	Sample ID	Collection Date	Collection Time	Sample Matrix	Sampler Initials	VOC 8260	PCB (2µm lab-filtered)	PCB (0.2µm lab-filtered)	PCB (0.45µm field-filtered)	Sample Comments	TOTAL # BOTTLES
01726-01,02,03	MW-28	1/16/14	1450	GW	KDJ	X	X	X	X		9
-04,05,06	DUP-1	1/16/14	1500	GW	KDJ	X	X	X	X		9
-07	MW-32	1/17/14	0930	GW	KDJ	X					3
-08,-09,-10	MW-41	1/17/14	1200	GW	KDJ	X	X	X	X		9
-11,-12,13	MW-40	1/17/14	16:20	GW	KDJ	X	(H)	(H)	X		9
-14	Trip Blank					X					1
Container Type						V	A	A	A		
Preservative						B	A	A	A		

Container Type	Preservative
P= Plastic	A= None
A= Amber glass	B= HCl
V= Vial	C= HNO_3
G= Glass	D= H_2SO_4
B= Bacteria cup	E= NaOH
C= Cube	F= MeOH
O= Other	G= $NaHSO_4$
E= Encore	H = $Na_2S_2O_3$
D= BOD Bottle	I= Ascorbic Acid
	J = NH_4Cl
	K= Zn Acetate
	O= Other

Relinquished By:	Date/Time	Received By:	Date/Time
Kevin Jordan	1/17/14 18:54	[signature]	1-17-14 1854
[signature]	1-17-14 1854	[signature]	1/17/14 1851

All samples submitted are subject to Alpha's Terms and Conditions. See reverse side.

FORM NO: 01-01 (rev. 12-Mar-2012)

CHAIN OF CUSTODY

PAGE 1 OF 1

ALPHA ANALYTICAL — World Class Chemistry
8 Walkup Drive, Westboro, MA 01581, Tel: 508-898-9220
320 Forbes Blvd, Mansfield, MA 02048, Tel: 508-822-9300

Date Rec'd in Lab: 1/17/14

ALPHA Job #: L1401726

Client Information

Client: TRC
Address: 650 Suffolk St. Lowell, MA 01854
Phone: 978-970-5600
Email: dsullivan, aleonard @trcsolutions.com

Project Information

Project Name: NBHS (PSWS)
Project Location: New Bedford, MA
Project #: 115058
Project Manager: Al Leonard, David Sullivan
ALPHA Quote #:

Turn-Around Time

☒ Standard ☐ RUSH (only confirmed if pre-approved!)
Date Due: 1/24/14

Additional Project Information:

Report Information - Data Deliverables

☐ ADEx ☒ EMAIL

Billing Information

☒ Same as Client info PO #:

Regulatory Requirements & Project Information Requirements

☒ Yes ☐ No MA MCP Analytical Methods ☐ Yes ☐ No CT RCP Analytical Methods
☐ Yes ☐ No Matrix Spike Required on this SDG? (Required for MCP Inorganics)
☐ Yes ☐ No GW1 Standards (Info Required for Metals & EPH with Targets)
☐ Yes ☐ No NPDES RGP
☐ Other State /Fed Program MA Criteria MCP

ANALYSIS: VOC: ☒ 8260 ☐ 624 ☐ 524.2; SVOC: ☐ ABN ☐ PAH; METALS: ☐ MCP 13 ☐ MCP 14 ☐ RCP 15; METALS: ☐ RCRA5 ☐ RCRA8 ☐ PP13; EPH: ☐ Ranges & Targets ☐ Ranges Only; VPH: ☐ Ranges & Targets ☐ Ranges Only; ☐ PCB ☐ PEST; TPH: ☐ Quant Only ☐ Fingerprint; PCB (2 µm lab-filtered); PCB (0.2 µm lab-filtered); PCB (0.45 µm field-filtered)

SAMPLE INFO — Filtration: ☒ Field ☒ Lab to do; Preservation: ☐ Lab to do

ALPHA Lab ID (Lab Use Only)	Sample ID	Collection Date	Collection Time	Sample Matrix	Sampler Initials	VOC 8260	SVOC	METALS	METALS	EPH	VPH	PCB/PEST	TPH	PCB (2 µm lab-filtered)	PCB (0.2 µm lab-filtered)	PCB (0.45 µm field-filtered)	Sample Comments	Total # Bottles
01726-01,02,03	MW-28	1/16/14	1450	GW	KDJ	X								X	X	X		9
-04,05,06	DUP-1	1/16/14	1500	GW	KDJ	X								X	X	X		9
-07	MW-32	1/17/14	0930	GW	KDJ	X												3
-08,-09,-10	MW-41	1/17/14	1200	GW	KDJ	X								X	X	X		9
-11,-12,-13	MW-40	1/17/14		GW	KDJ	X								(H)	(H)	X		9
-14	Trip Blank					X												1
Container Type						V								A	A	A		
Preservative						B								A	A	A		

Container Type	Preservative
P= Plastic	A= None
A= Amber glass	B= HCl
V= Vial	C= HNO_3
G= Glass	D= H_2SO_4
B= Bacteria cup	E= NaOH
C= Cube	F= MeOH
O= Other	G= $NaHSO_4$
E= Encore	H = $Na_2S_2O_3$
D= BOD Bottle	I= Ascorbic Acid
	J = NH_4Cl
	K= Zn Acetate
	O= Other

Relinquished By:	Date/Time	Received By:	Date/Time
Kevin Jordan	1/17/14 18:54	[signature]	1-17-14 1854
[signature]	1-17-14 1854	[signature]	1/17/14 1851

All samples submitted are subject to Alpha's Terms and Conditions. See reverse side.

FORM NO: 01-01 (rev. 12-Mar-2012)

7A
Volatile Organics CONTINUING CALIBRATION CHECK

Lab Name: Alpha Analytical Labs

SDG No.: L1401726

Instrument ID: Quimby.i Calibration Date: 22-JAN-2014 Time: 05:59

Lab File ID: 0122A02 Init. Calib. Date(s): 21-DEC-2 21-DEC-2

Sample No: 8260 CCAL Init. Calib. Times : 17:04 20:13

Compound	RRF	RRF	MIN RRF	%D	MAX %D	
dichlorodifluoromethane	.35778	.41803	.1	-17	20	
chloromethane	.55506	.54093	.1	3	20	
vinyl chloride	.56939	.61012	.1	-7	20	
bromomethane	.33999	.31362	.1	8	20	
chloroethane	.35909	.37431	.1	-4	20	
trichlorofluoromethane	.63688	.67494	.1	-6	20	
ethyl ether	.1843	.1994	.05	-8	20	
acrolein	.05569	.05498	.05	1	20	
freon-113	.38903	.44294	.1	-14	20	
acetone	.08811	.10515	.1	-19	20	F
1,1,-dichloroethene	.36922	.41391	.1	-12	20	
tert-butyl alcohol	500	454	.05	9	20	
iodomethane	.36512	.30676	.05	16	20	
methyl acetate	.16993	.17732	.01	-4	20	
methylene chloride	.43413	.46351	.1	-7	20	
carbon disulfide	1.1533	1.1249	.1	2	20	
acrylonitrile	.09927	.10021	.05	-1	20	
methyl tert butyl ether	.6119	.66045	.1	-8	20	
Halothane	.31273	.36251	.05	-16	20	
trans-1,2-dichloroethene	.40679	.46216	.1	-14	20	
Diisopropyl Ether	1.3181	1.2587	.05	5	20	
vinyl acetate	100	86.292	.05	14	20	
1,1-dichloroethane	.75596	.78515	.2	-4	20	
Ethyl-Tert-Butyl-Ether	.84041	.90178	.05	-7	20	
2-butanone	.10266	.12123	.1	-18	20	
2,2-dichloropropane	100	112	.05	-12	20	
ethyl acetate	.22846	.21666	.05	5	20	
cis-1,2-dichloroethene	.45207	.48371	.1	-7	20	
chloroform	.703	.76063	.2	-8	20	
bromochloromethane	.18162	.21178	.05	-17	20	
tetrahydrofuran	.06852	.06196	.05	10	20	
1,1,1-trichloroethane	.52952	.61069	.1	-15	20	
cyclohexane	.84779	.84544	.01	0	30	
1,1-dichloropropene	.57625	.62629	.05	-9	20	
carbontetrachloride	100	96.628	.1	3	20	
Tertiary-Amyl Methyl Ether	100	102	.05	-2	20	
1,2-dichloroethane	.47638	.49902	.1	-5	20	
benzene	1.7286	1.8844	.5	-9	20	

FORM VII MCP-8260-10

7A
CONTINUING CALIBRATION CHECK

Lab Name: Alpha Analytical Labs

SDG No.: L1401726

Instrument ID: Quimby.i Calibration Date: 22-JAN-2014 Time: 05:59

Lab File ID: 0122A02 Init. Calib. Date(s): 21-DEC-2 21-DEC-2

Sample No: 8260 CCAL Init. Calib. Times : 17:04 20:13

Compound	$\overline{RRF}$	RRF	MIN RRF	%D	MAX %D	
trichloroethene	.41357	.45656	.2	-10	20	
methyl cyclohexane	.73553	.7891	.01	-7	30	
1,2-dichloropropane	.42692	.44751	.1	-5	20	
bromodichloromethane	.47774	.50343	.2	-5	20	
1,4-dioxane	.00264	.00238	.05	10	20	F
dibromomethane	.19285	.21096	.05	-9	20	
2-chloroethylvinyl ether	.05073	.00163	.05	97	20	F
4-methyl-2-pentanone	.09004	.08612	.1	4	20	F
cis-1,3-dichloropropene	100	102	.2	-2	20	
toluene	1.3546	1.4100	.4	-4	20	
ethyl-methacrylate	100	101	.01	-1	0	F
trans-1,3-dichloropropene	100	98.405	.1	2	20	
2-hexanone	.18354	.17331	.1	6	20	
1,1,2-trichloroethane	.27883	.30081	.1	-8	20	
1,3-dichloropropane	.60059	.63432	.05	-6	20	
tetrachloroethene	.59429	.68426	.2	-15	20	
chlorodibromomethane	.37178	.40275	.1	-8	20	
1,2-dibromoethane	.29775	.31492	.1	-6	20	
chlorobenzene	1.4594	1.5863	.5	-9	20	
1,1,1,2-tetrachloroethane	100	107	.05	-7	20	
ethyl benzene	2.6362	2.8390	.1	-8	20	
p/m xylene	1.1379	1.1693	.1	-3	20	
o xylene	1.0637	1.1258	.3	-6	20	
styrene	1.6288	1.8446	.31	-13	20	
isopropylbenzene	2.7116	2.9526	.1	-9	20	
bromoform	100	104	.1	-4	20	
1,4-dichlorobutane	1.0881	1.0019	.01	8	30	
1,1,2,2,-tetrachloroethane	.67753	.68295	.3	-1	20	
1,2,3-trichloropropane	.514	.50859	.05	1	20	
trans-1,4-dichloro-2-butene	.20047	.15792	.05	21	20	F
n-propylbenzene	5.1590	5.2859	.05	-2	20	
bromobenzene	1.1134	1.2127	.05	-9	20	
4-ethyltoluene	2.3765	2.7227	.05	-15	20	
1,3,5-trimethybenzene	3.9832	4.0555	.05	-2	20	
2-chlorotoluene	3.7248	3.6575	.05	2	20	
4-chorotoluene	3.3375	3.3556	.05	-1	20	
tert-butylbenzene	3.5155	3.5369	.05	-1	20	
1,2,4-trimethylbenzene	3.758	3.8981	.05	-4	20	

FORM VII MCP-8260-10

7A
CONTINUING CALIBRATION CHECK

Lab Name: Alpha Analytical Labs

SDG No.: L1401726

Instrument ID: Quimby.i Calibration Date: 22-JAN-2014 Time: 05:59

Lab File ID: 0122A02 Init. Calib. Date(s): 21-DEC-2 21-DEC-2

Sample No: 8260 CCAL Init. Calib. Times : 17:04 20:13

Compound	$\overline{RRF}$	RRF	MIN RRF	%D	MAX %D
sec-butylbenzene	5.0101	5.057	.05	-1	20
p-isopropyltoluene	4.2069	4.3062	.05	-2	20
1,3-dichlorobenzene	2.2639	2.4205	.6	-7	20
1,4-dichlorobenzene	2.2226	2.3717	.5	-7	20
n-butylbenzene	4.4183	4.1697	.05	6	20
1,2,4,5-tetramethylbenezene	1.2943	1.3897	.05	-7	20
1,2-dichlorobenzene	1.9862	2.1410	.4	-8	20
p-diethylbenzene	1.6487	1.8782	.05	-14	20
1,2-dibromo-3-chloropropane	100	93.702	.05	6	20
1,3,5-trichlorobenzene	1.4116	1.4948	.01	-6	30
1,2,4-trichlorobenzene	1.1168	1.1330	.2	-1	20
hexachlorobutadiene	.49694	.49218	.05	1	20
naphthalene	1.8020	1.7462	.05	3	20
1,2,3-trichlorobenzene	.86324	.8818	.05	-2	20
dibromofluoromethane	.23485	.23745	.05	-1	20
1,2-dichloroethane-d4	.24724	.22731	.05	8	20
toluene-d8	1.1848	1.1390	.05	4	20
4-bromofluorobenzene	.84462	.77266	.05	9	20

FORM VII MCP-8260-10

7A
CONTINUING CALIBRATION CHECK

Lab Name: Alpha Analytical Labs

SDG No.: L1401726

Instrument ID: Quimby.i Calibration Date: 23-JAN-2014 Time: 04:42

Lab File ID: 0123A02 Init. Calib. Date(s): 21-DEC-2 21-DEC-2

Sample No: 8260 CCAL Init. Calib. Times : 17:04 20:13

Compound	RRF	RRF	MIN RRF	%D	MAX %D	
dichlorodifluoromethane	.35778	.4176	.1	-17	20	
chloromethane	.55506	.53152	.1	4	20	
vinyl chloride	.56939	.59502	.1	-5	20	
bromomethane	.33999	.34243	.1	-1	20	
chloroethane	.35909	.3719	.1	-4	20	
trichlorofluoromethane	.63688	.67053	.1	-5	20	
ethyl ether	.1843	.20289	.05	-10	20	
acrolein	.05569	.05045	.05	9	20	
freon-113	.38903	.44163	.1	-14	20	
acetone	.08811	.10795	.1	-23	20	F
1,1,-dichloroethene	.36922	.41437	.1	-12	20	
tert-butyl alcohol	500	488	.05	2	20	
iodomethane	.36512	.33265	.05	9	20	
methyl acetate	.16993	.17753	.01	-4	20	
methylene chloride	.43413	.45644	.1	-5	20	
carbon disulfide	1.1533	1.1162	.1	3	20	
acrylonitrile	.09927	.10087	.05	-2	20	
methyl tert butyl ether	.6119	.66293	.1	-8	20	
Halothane	.31273	.35414	.05	-13	20	
trans-1,2-dichloroethene	.40679	.4512	.1	-11	20	
Diisopropyl Ether	1.3181	1.2620	.05	4	20	
vinyl acetate	100	87.296	.05	13	20	
1,1-dichloroethane	.75596	.7749	.2	-3	20	
Ethyl-Tert-Butyl-Ether	.84041	.90613	.05	-8	20	
2-butanone	.10266	.10934	.1	-7	20	
2,2-dichloropropane	100	114	.05	-14	20	
ethyl acetate	.22846	.22244	.05	3	20	
cis-1,2-dichloroethene	.45207	.48743	.1	-8	20	
chloroform	.703	.75663	.2	-8	20	
bromochloromethane	.18162	.21308	.05	-17	20	
tetrahydrofuran	.06852	.06452	.05	6	20	
1,1,1-trichloroethane	.52952	.60299	.1	-14	20	
cyclohexane	.84779	.83663	.01	1	30	
1,1-dichloropropene	.57625	.62004	.05	-8	20	
carbontetrachloride	100	95.864	.1	4	20	
Tertiary-Amyl Methyl Ether	100	102	.05	-2	20	
1,2-dichloroethane	.47638	.49256	.1	-3	20	
benzene	1.7286	1.8722	.5	-8	20	

FORM VII MCP-8260-10

7A
CONTINUING CALIBRATION CHECK

Lab Name: Alpha Analytical Labs

SDG No.: L1401726

Instrument ID: Quimby.i Calibration Date: 23-JAN-2014 Time: 04:42

Lab File ID: 0123A02 Init. Calib. Date(s): 21-DEC-2 21-DEC-2

Sample No: 8260 CCAL Init. Calib. Times : 17:04 20:13

Compound	RRF	RRF	MIN RRF	%D	MAX %D	
trichloroethene	.41357	.45043	.2	-9	20	
methyl cyclohexane	.73553	.78145	.01	-6	30	
1,2-dichloropropane	.42692	.44523	.1	-4	20	
bromodichloromethane	.47774	.5063	.2	-6	20	
1,4-dioxane	.00264	.0028	.05	-6	20	F
dibromomethane	.19285	.21217	.05	-10	20	
2-chloroethylvinyl ether	.05073	.00148	.05	97	20	F
4-methyl-2-pentanone	.09004	.08267	.1	8	20	F
cis-1,3-dichloropropene	100	102	.2	-2	20	
toluene	1.3546	1.4342	.4	-6	20	
ethyl-methacrylate	100	101	.01	-1	0	F
trans-1,3-dichloropropene	100	99	.1	1	20	
2-hexanone	.18354	.16784	.1	9	20	
1,1,2-trichloroethane	.27883	.30158	.1	-8	20	
1,3-dichloropropane	.60059	.63674	.05	-6	20	
tetrachloroethene	.59429	.69101	.2	-16	20	
chlorodibromomethane	.37178	.39831	.1	-7	20	
1,2-dibromoethane	.29775	.32226	.1	-8	20	
chlorobenzene	1.4594	1.6039	.5	-10	20	
1,1,1,2-tetrachloroethane	100	106	.05	-6	20	
ethyl benzene	2.6362	2.8507	.1	-8	20	
p/m xylene	1.1379	1.1806	.1	-4	20	
o xylene	1.0637	1.1215	.3	-5	20	
styrene	1.6288	1.8588	.31	-14	20	
isopropylbenzene	2.7116	2.9405	.1	-8	20	
bromoform	100	102	.1	-2	20	
1,4-dichlorobutane	1.0881	1.0034	.01	8	30	
1,1,2,2,-tetrachloroethane	.67753	.67429	.3	0	20	
1,2,3-trichloropropane	.514	.50252	.05	2	20	
trans-1,4-dichloro-2-butene	.20047	.15803	.05	21	20	F
n-propylbenzene	5.1590	5.2623	.05	-2	20	
bromobenzene	1.1134	1.2208	.05	-10	20	
4-ethyltoluene	2.3765	2.6825	.05	-13	20	
1,3,5-trimethybenzene	3.9832	4.0151	.05	-1	20	
2-chlorotoluene	3.7248	3.6249	.05	3	20	
4-chorotoluene	3.3375	3.3368	.05	0	20	
tert-butylbenzene	3.5155	3.4880	.05	1	20	
1,2,4-trimethylbenzene	3.758	3.8680	.05	-3	20	

FORM VII MCP-8260-10

7A
CONTINUING CALIBRATION CHECK

Lab Name: Alpha Analytical Labs

SDG No.: L1401726

Instrument ID: Quimby.i Calibration Date: 23-JAN-2014 Time: 04:42

Lab File ID: 0123A02 Init. Calib. Date(s): 21-DEC-2 21-DEC-2

Sample No: 8260 CCAL Init. Calib. Times : 17:04 20:13

Compound	RRF	RRF	MIN RRF	%D	MAX %D
sec-butylbenzene	5.0101	4.9837	.05	1	20
p-isopropyltoluene	4.2069	4.2831	.05	-2	20
1,3-dichlorobenzene	2.2639	2.4090	.6	-6	20
1,4-dichlorobenzene	2.2226	2.3828	.5	-7	20
n-butylbenzene	4.4183	4.1073	.05	7	20
1,2,4,5-tetramethylbenezene	1.2943	1.3571	.05	-5	20
1,2-dichlorobenzene	1.9862	2.1434	.4	-8	20
p-diethylbenzene	1.6487	1.8655	.05	-13	20
1,2-dibromo-3-chloropropane	100	90.127	.05	10	20
1,3,5-trichlorobenzene	1.4116	1.4985	.01	-6	30
1,2,4-trichlorobenzene	1.1168	1.1156	.2	0	20
hexachlorobutadiene	.49694	.49155	.05	1	20
naphthalene	1.8020	1.7425	.05	3	20
1,2,3-trichlorobenzene	.86324	.88276	.05	-2	20
dibromofluoromethane	.23485	.23799	.05	-1	20
1,2-dichloroethane-d4	.24724	.23012	.05	7	20
toluene-d8	1.1848	1.1617	.05	2	20
4-bromofluorobenzene	.84462	.77506	.05	8	20

FORM VII MCP-8260-10

ANALYTICAL REPORT

Lab Number:	L1402622
Client:	TRC Environmental Consultants Wannalancit Mills 650 Suffolk Street Lowell, MA 01854
ATTN:	Matt Oliveira
Phone:	(978) 656-3600
Project Name:	NBHS (PSWS)
Project Number:	115058
Report Date:	02/04/14

The original project report/data package is held by Alpha Analytical. This report/data package is paginated and should be reproduced only in its entirety. Alpha Analytical holds no responsibility for results and/or data that are not consistent with the original.

Certifications & Approvals: MA (M-MA086), NY (11148), CT (PH-0574), NH (2003), NJ NELAP (MA935), RI (LAO00065), ME (MA00086), PA (68-03671), USDA (Permit #P-330-11-00240), NC (666), TX (T104704476), DOD (L2217), US Army Corps of Engineers.

Eight Walkup Drive, Westborough, MA 01581-1019
508-898-9220 (Fax) 508-898-9193 800-624-9220 - www.alphalab.com

Project Name: NBHS (PSWS)
Project Number: 115058

Lab Number: L1402622
Report Date: 02/04/14

Alpha Sample ID	Client ID	Sample Location	Collection Date/Time
L1402622-01	MW-28 (FILTERED 0.2)	NEW BEDFORD, MA	01/16/14 14:50

Project Name: NBHS (PSWS) **Lab Number:** L1402622

Project Number: 115058 **Report Date:** 02/04/14

MADEP MCP Response Action Analytical Report Certification

This form provides certifications for all samples performed by MCP methods. Please refer to the Sample Results and Container Information sections of this report for specification of MCP methods used for each analysis. The following questions pertain only to MCP Analytical Methods.

An affirmative response to questions A through F is required for "Presumptive Certainty" status		
A	Were all samples received in a condition consistent with those described on the Chain-of-Custody, properly preserved (including temperature) in the field or laboratory, and prepared/analyzed within method holding times?	YES
B	Were the analytical method(s) and all associated QC requirements specified in the selected CAM protocol(s) followed?	YES
C	Were all required corrective actions and analytical response actions specified in the selected CAM protocol(s) implemented for all identified performance standard non-conformances?	YES
D	Does the laboratory report comply with all the reporting requirements specified in CAM VII A, "Quality Assurance and Quality Control Guidelines for the Acquisition and Reporting of Analytical Data?"	YES
E a.	VPH, EPH, and APH Methods only: Was each method conducted without significant modification(s)? (Refer to the individual method(s) for a list of significant modifications).	N/A
E b.	APH and TO-15 Methods only: Was the complete analyte list reported for each method?	N/A
F	Were all applicable CAM protocol QC and performance standard non-conformances identified and evaluated in a laboratory narrative (including all "No" responses to Questions A through E)?	YES

A response to questions G, H and I is required for "Presumptive Certainty" status		
G	Were the reporting limits at or below all CAM reporting limits specified in the selected CAM protocol(s)?	NO
H	Were all QC performance standards specified in the CAM protocol(s) achieved?	YES
I	Were results reported for the complete analyte list specified in the selected CAM protocol(s)?	YES

For any questions answered "No", please refer to the case narrative section on the following page(s).

Please note that sample matrix information is located in the Sample Results section of this report.

Project Name: NBHS (PSWS) **Lab Number:** L1402622
Project Number: 115058 **Report Date:** 02/04/14

Case Narrative

The samples were received in accordance with the Chain of Custody and no significant deviations were encountered during the preparation or analysis unless otherwise noted. Sample Receipt, Container Information, and the Chain of Custody are located at the back of the report.

Results contained within this report relate only to the samples submitted under this Alpha Lab Number and meet all of the requirements of NELAC, for all NELAC accredited parameters. The data presented in this report is organized by parameter (i.e. VOC, SVOC, etc.). Sample specific Quality Control data (i.e. Surrogate Spike Recovery) is reported at the end of the target analyte list for each individual sample, followed by the Laboratory Batch Quality Control at the end of each parameter. If a sample was re-analyzed or re-extracted due to a required quality control corrective action and if both sets of data are reported, the Laboratory ID of the re-analysis or re-extraction is designated with an "R" or "RE", respectively. When multiple Batch Quality Control elements are reported (e.g. more than one LCS), the associated samples for each element are noted in the grey shaded header line of each data table. Any Laboratory Batch, Sample Specific % recovery or RPD value that is outside the listed Acceptance Criteria is bolded in the report. Performance criteria for CAM and RCP methods allow for some LCS compound failures to occur and still be within method compliance. In these instances, the specific failures are not narrated but are noted in the associated QC table. This information is also incorporated in the Data Usability format for our Data Merger tool where it can be reviewed along with any associated usability implications. Soil/sediments, solids and tissues are reported on a dry weight basis unless otherwise noted. Definitions of all data qualifiers and acronyms used in this report are provided in the Glossary located at the back of the report.

In reference to questions H (CAM) or 4 (RCP) when "NO" is checked, the performance criteria for CAM and RCP methods allow for some quality control failures to occur and still be within method compliance. In these instances the specific failure is not narrated but noted in the associated QC table. The information is also incorporated in the Data Usability format of our Data Merger tool where it can be reviewed along with any associated usability implications.

Please see the associated ADEx data file for a comparison of laboratory reporting limits that were achieved with the regulatory Numerical Standards requested on the Chain of Custody.

HOLD POLICY
For samples submitted on hold, Alpha's policy is to hold samples (with the exception of Air canisters) free of charge for 21 calendar days from the date the project is completed. After 21 calendar days, we will dispose of all samples submitted including those put on hold unless you have contacted your Client Service Representative and made arrangements for Alpha to continue to hold the samples. Air canisters will be disposed after 3 business days from the date the project is completed.

Please contact Client Services at 800-624-9220 with any questions.

Project Name:	NBHS (PSWS)	**Lab Number:**	L1402622
Project Number:	115058	**Report Date:**	02/04/14

Case Narrative (continued)

MCP Related Narratives

PCBs

L1402622-01 has elevated detection limits due to limited sample volume available for analysis.

In reference to question G:

The requested CAM reporting limits were not achieved for all analytes.

I, the undersigned, attest under the pains and penalties of perjury that, to the best of my knowledge and belief and based upon my personal inquiry of those responsible for providing the information contained in this analytical report, such information is accurate and complete. This certificate of analysis is not complete unless this page accompanies any and all pages of this report.

Authorized Signature: Michelle M. Morris

Title: Technical Director/Representative

Date: 02/04/14

ORGANICS

PCBS

Project Name: NBHS (PSWS)
Project Number: 115058
Lab Number: L1402622
Report Date: 02/04/14

SAMPLE RESULTS

Lab ID:	L1402622-01	Date Collected:	01/16/14 14:50
Client ID:	MW-28 (FILTERED 0.2)	Date Received:	01/17/14
Sample Location:	NEW BEDFORD, MA	Field Prep:	Not Specified
Matrix:	Water	Extraction Method:	EPA 3510C
Analytical Method:	97,8082	Extraction Date:	02/02/14 09:17
Analytical Date:	02/03/14 14:48	Cleanup Method1:	EPA 3665A
Analyst:	JW	Cleanup Date1:	02/03/14
		Cleanup Method2:	EPA 3660B
		Cleanup Date2:	02/03/14

Parameter	Result	Qualifier	Units	RL	MDL	Dilution Factor	Column
MCP Polychlorinated Biphenyls - Westborough Lab							
Aroclor 1016	ND		ug/l	0.258	--	1	A
Aroclor 1221	ND		ug/l	0.258	--	1	A
Aroclor 1232	ND		ug/l	0.258	--	1	A
Aroclor 1242	ND		ug/l	0.258	--	1	A
Aroclor 1248	ND		ug/l	0.258	--	1	A
Aroclor 1254	ND		ug/l	0.258	--	1	A
Aroclor 1260	ND		ug/l	0.258	--	1	A
Aroclor 1262	ND		ug/l	0.258	--	1	A
Aroclor 1268	ND		ug/l	0.258	--	1	A

Surrogate	% Recovery	Qualifier	Acceptance Criteria	Column
2,4,5,6-Tetrachloro-m-xylene	60		30-150	A
Decachlorobiphenyl	76		30-150	A
2,4,5,6-Tetrachloro-m-xylene	63		30-150	B
Decachlorobiphenyl	75		30-150	B

Project Name: NBHS (PSWS)

Project Number: 115058

Lab Number: L1402622

Report Date: 02/04/14

Method Blank Analysis
Batch Quality Control

Analytical Method: 97,8082
Analytical Date: 02/03/14 15:25
Analyst: JW

Extraction Method: EPA 3510C
Extraction Date: 02/02/14 09:17
Cleanup Method1: EPA 3665A
Cleanup Date1: 02/03/14
Cleanup Method2: EPA 3660B
Cleanup Date2: 02/03/14

Parameter	Result	Qualifier	Units	RL	MDL	Column
MCP Polychlorinated Biphenyls - Westborough Lab for sample(s): 01 Batch: WG668161-1						
Aroclor 1016	ND		ug/l	0.250	--	A
Aroclor 1221	ND		ug/l	0.250	--	A
Aroclor 1232	ND		ug/l	0.250	--	A
Aroclor 1242	ND		ug/l	0.250	--	A
Aroclor 1248	ND		ug/l	0.250	--	A
Aroclor 1254	ND		ug/l	0.250	--	A
Aroclor 1260	ND		ug/l	0.250	--	A
Aroclor 1262	ND		ug/l	0.250	--	A
Aroclor 1268	ND		ug/l	0.250	--	A

Surrogate	%Recovery	Qualifier	Acceptance Criteria	Column
2,4,5,6-Tetrachloro-m-xylene	61		30-150	A
Decachlorobiphenyl	44		30-150	A
2,4,5,6-Tetrachloro-m-xylene	63		30-150	B
Decachlorobiphenyl	43		30-150	B

Lab Control Sample Analysis
Batch Quality Control

Project Name: NBHS (PSWS)
Project Number: 115058

Lab Number: L1402622
Report Date: 02/04/14

Parameter	LCS %Recovery	Qual	LCSD %Recovery	Qual	%Recovery Limits	RPD	Qual	RPD Limits	Column
MCP Polychlorinated Biphenyls - Westborough Lab Associated sample(s): 01 Batch: WG668161-2 WG668161-3									
Aroclor 1016	77		73		40-140	6		20	A
Aroclor 1260	74		81		40-140	9		20	A

Surrogate	LCS %Recovery	Qual	LCSD %Recovery	Qual	Acceptance Criteria	Column
2,4,5,6-Tetrachloro-m-xylene	66		64		30-150	A
Decachlorobiphenyl	51		92		30-150	A
2,4,5,6-Tetrachloro-m-xylene	69		68		30-150	B
Decachlorobiphenyl	45		85		30-150	B

Project Name: NBHS (PSWS)
Project Number: 115058

Lab Number: L1402622
Report Date: 02/04/14

Sample Receipt and Container Information

Were project specific reporting limits specified? YES

Reagent H2O Preserved Vials Frozen on: NA

Cooler Information Cooler	Custody Seal
B	Absent

Container Information

Container ID	Container Type	Cooler	pH	Temp deg C	Pres	Seal	Analysis(*)
L1402622-01A	Amber 1000ml unpreserved	B	7	3.4	Y	Absent	FILTER-EXT(1)
L1402622-01X	Amber 1000ml unpreserved split	B	N/A	3.4	Y	Absent	MCP-8082-10(365)

*Values in parentheses indicate holding time in days

Project Name:	NBHS (PSWS)	**Lab Number:**	L1402622
Project Number:	115058	**Report Date:**	02/04/14

GLOSSARY

Acronyms

EDL	- Estimated Detection Limit: This value represents the level to which target analyte concentrations are reported as estimated values, when those target analyte concentrations are quantified below the reporting limit (RL). The EDL includes any adjustments from dilutions, concentrations or moisture content, where applicable. The use of EDLs is specific to the analysis of PAHs using Solid-Phase Microextraction (SPME).
EPA	- Environmental Protection Agency.
LCS	- Laboratory Control Sample: A sample matrix, free from the analytes of interest, spiked with verified known amounts of analytes or a material containing known and verified amounts of analytes.
LCSD	- Laboratory Control Sample Duplicate: Refer to LCS.
LFB	- Laboratory Fortified Blank: A sample matrix, free from the analytes of interest, spiked with verified known amounts of analytes or a material containing known and verified amounts of analytes.
MDL	- Method Detection Limit: This value represents the level to which target analyte concentrations are reported as estimated values, when those target analyte concentrations are quantified below the reporting limit (RL). The MDL includes any adjustments from dilutions, concentrations or moisture content, where applicable.
MS	- Matrix Spike Sample: A sample prepared by adding a known mass of target analyte to a specified amount of matrix sample for which an independent estimate of target analyte concentration is available.
MSD	- Matrix Spike Sample Duplicate: Refer to MS.
NA	- Not Applicable.
NC	- Not Calculated: Term is utilized when one or more of the results utilized in the calculation are non-detect at the parameter's reporting unit.
NI	- Not Ignitable.
RL	- Reporting Limit: The value at which an instrument can accurately measure an analyte at a specific concentration. The RL includes any adjustments from dilutions, concentrations or moisture content, where applicable.
RPD	- Relative Percent Difference: The results from matrix and/or matrix spike duplicates are primarily designed to assess the precision of analytical results in a given matrix and are expressed as relative percent difference (RPD). Values which are less than five times the reporting limit for any individual parameter are evaluated by utilizing the absolute difference between the values; although the RPD value will be provided in the report.
SRM	- Standard Reference Material: A reference sample of a known or certified value that is of the same or similar matrix as the associated field samples.

Footnotes

1	- The reference for this analyte should be considered modified since this analyte is absent from the target analyte list of the original method.

Terms

Analytical Method: Both the document from which the method originates and the analytical reference method. (Example: EPA 8260B is shown as 1,8260B.) The codes for the reference method documents are provided in the References section of the Addendum.

Data Qualifiers

A	- Spectra identified as "Aldol Condensation Product".
B	- The analyte was detected above the reporting limit in the associated method blank. Flag only applies to associated field samples that have detectable concentrations of the analyte at less than ten times (10x) the concentration found in the blank. For MCP-related projects, flag only applies to associated field samples that have detectable concentrations of the analyte at less than ten times (10x) the concentration found in the blank. For DOD-related projects, flag only applies to associated field samples that have detectable concentrations of the analyte at less than ten times (10x) the concentration found in the blank AND the analyte was detected above one-half the reporting limit (or above the reporting limit for common lab contaminants) in the associated method blank. For NJ-Air-related projects, flag only applies to associated field samples that have detectable concentrations of the analyte above the reporting limit.
C	- Co-elution: The target analyte co-elutes with a known lab standard (i.e. surrogate, internal standards, etc.) for co-extracted analyses.
D	- Concentration of analyte was quantified from diluted analysis. Flag only applies to field samples that have detectable concentrations of the analyte.
E	- Concentration of analyte exceeds the range of the calibration curve and/or linear range of the instrument.
G	- The concentration may be biased high due to matrix interferences (i.e, co-elution) with non-target compound(s). The result should be considered estimated.
H	- The analysis of pH was performed beyond the regulatory-required holding time of 15 minutes from the time of sample collection.
I	- The lower value for the two columns has been reported due to obvious interference.

Report Format: Data Usability Report

Project Name:	NBHS (PSWS)	**Lab Number:**	L1402622
Project Number:	115058	**Report Date:**	02/04/14

Data Qualifiers

M - Reporting Limit (RL) exceeds the MCP CAM Reporting Limit for this analyte.

NJ - Presumptive evidence of compound. This represents an estimated concentration for Tentatively Identified Compounds (TICs), where the identification is based on a mass spectral library search.

P - The RPD between the results for the two columns exceeds the method-specified criteria.

Q - The quality control sample exceeds the associated acceptance criteria. For DOD-related projects, LCS and/or Continuing Calibration Standard exceedences are also qualified on all associated sample results. Note: This flag is not applicable for matrix spike recoveries when the sample concentration is greater than 4x the spike added or for batch duplicate RPD when the sample concentrations are less than 5x the RL. (Metals only.)

R - Analytical results are from sample re-analysis.

RE - Analytical results are from sample re-extraction.

S - Analytical results are from modified screening analysis.

J - Estimated value. This represents an estimated concentration for Tentatively Identified Compounds (TICs).

ND - Not detected at the reporting limit (RL) for the sample.

Report Format: Data Usability Report

Project Name: NBHS (PSWS) **Lab Number:** L1402622
Project Number: 115058 **Report Date:** 02/04/14

REFERENCES

97 EPA Test Methods (SW-846) with QC Requirements & Performance Standards for the Analysis of EPA SW-846 Methods under the Massachusetts Contingency Plan, WSC-CAM-IIA, IIB, IIIA, IIIB, IIIC, IIID, VA, VB, VC, VIA, VIB, VIIIA and VIIIB, July 2010.

LIMITATION OF LIABILITIES

Alpha Analytical performs services with reasonable care and diligence normal to the analytical testing laboratory industry. In the event of an error, the sole and exclusive responsibility of Alpha Analytical shall be to re-perform the work at it's own expense. In no event shall Alpha Analytical be held liable for any incidental, consequential or special damages, including but not limited to, damages in any way connected with the use of, interpretation of, information or analysis provided by Alpha Analytical.

We strongly urge our clients to comply with EPA protocol regarding sample volume, preservation, cooling, containers, sampling procedures, holding time and splitting of samples in the field.

Certification Information

Last revised December 11, 2013

The following analytes are not included in our NELAP Scope of Accreditation:

Westborough Facility
EPA 524.2: Acetone, 2-Butanone (Methyl ethyl ketone (MEK)), Tert-butyl alcohol, 2-Hexanone, Tetrahydrofuran, 1,3,5-Trichlorobenzene, 4-Methyl-2-pentanone (MIBK), Carbon disulfide, Diethyl ether.
EPA 8260C: 1,2,4,5-Tetramethylbenzene, 4-Ethyltoluene, Iodomethane (methyl iodide), Methyl methacrylate, Azobenzene.
EPA 8330A/B: PETN, Picric Acid, Nitroglycerine, 2,6-DANT, 2,4-DANT.
EPA 8270D: 1-Methylnaphthalene, Dimethylnaphthalene,1,4-Diphenylhydrazine.
EPA 625: 4-Chloroaniline, 4-Methylphenol.
SM4500: Soil: Total Phosphorus, TKN, NO2, NO3.
EPA 9071: Total Petroleum Hydrocarbons, Oil & Grease.

Mansfield Facility
EPA 8270D: Biphenyl.
EPA TO-15: Halothane, 2,4,4-Trimethyl-2-pentene, 2,4,4-Trimethyl-1-pentene, Thiophene, 2-Methylthiophene, 3-Methylthiophene, 2-Ethylthiophene, 1,2,3-Trimethylbenzene, Indan, Indene, 1,2,4,5-Tetramethylbenzene, Benzothiophene, 1-Methylnaphthalene.

The following analytes are included in our Massachusetts DEP Scope of Accreditation, Westborough Facility:

Drinking Water
EPA 200.8: Sb,As,Ba,Be,Cd,Cr,Cu,Pb,Ni,Se,Tl; **EPA 200.7**: Ba,Be,Ca,Cd,Cr,Cu,Na; **EPA 245.1:** Mercury;
EPA 300.0: Nitrate-N, Fluoride, Sulfate; **EPA 353.2**: Nitrate-N, Nitrite-N; **SM4500NO3-F**: Nitrate-N, Nitrite-N; **SM4500F-C, SM4500CN-CE, EPA 180.1, SM2130B, SM4500Cl-D, SM2320B, SM2540C, SM4500H-B**
EPA 332: Perchlorate.
Microbiology: **SM9215B; SM9223-P/A, SM9223B-Colilert-QT, Enterolert-QT.**

Non-Potable Water
EPA 200.8: Al,Sb,As,Be,Cd,Cr,Cu,Pb,Mn,Ni,Se,Ag,Tl,Zn;
EPA 200.7: Al,Sb,As,Be,Cd,Ca,Cr,Co,Cu,Fe,Pb,Mg,Mn,Mo,Ni,K,Se,Ag,Na,Sr,Ti,Tl,V,Zn;
EPA 245.1, SM4500H,B, EPA 120.1, SM2510B, SM2540C, SM2340B, SM2320B, SM4500CL-E, SM4500F-BC, SM426C, SM4500NH3-BH, **EPA 350.1**: Ammonia-N, **LACHAT 10-107-06-1-B**: Ammonia-N, **SM4500NO3-F,**
EPA 353.2: Nitrate-N**, SM4500NH3-BC-NES, EPA 351.1, SM4500P-E, SM4500P-B, E, SM5220D, EPA 410.4, SM5210B, SM5310C, SM4500CL-D, EPA 1664, SM14 510AC, EPA 420.1, SM4500-CN-CE, SM2540D.**
EPA 624: Volatile Halocarbons & Aromatics,
EPA 608: Chlordane, Toxaphene, Aldrin, alpha-BHC, beta-BHC, gamma-BHC, delta-BHC, Dieldrin, DDD, DDE, DDT, Endosulfan I, Endosulfan II, Endosulfan sulfate, Endrin, Endrin Aldehyde, Heptachlor, Heptachlor Epoxide, PCBs
EPA 625: SVOC (Acid/Base/Neutral Extractables), **EPA 600/4-81-045**: PCB-Oil.
Microbiology: **SM9223B-Colilert-QT; Enterolert-QT, SM9222D-MF**.

For a complete listing of analytes and methods, please contact your Alpha Project Manager.

revised 1/24/14 CW

Serial_No:02041420:41

L1402622

CHAIN OF CUSTODY

PAGE 1 OF 1

Date Rec'd in Lab: 1/17/14

ALPHA Job #: L1401726 @ 1/21/14

ALPHA Analytical
Serving Clients Exclusively
8 Walkup Drive, Westboro, MA 01581, Tel: 508-898-9220
320 Forbes Blvd, Mansfield, MA 02048, Tel: 508-822-9300

Client Information

Client: TRC
Address: 650 Suffolk St. Lowell, MA 01854
Phone: 978-970-5600
Email: dsullivan@trcsolutions.com, aleonard@trcsolutions.com

Project Information

Project Name: NBHS (PSWS)
Project Location: New Bedford, MA
Project #: 115058
Project Manager: AL Leonard, David Sullivan
ALPHA Quote #:

Turn-Around Time

☒ Standard ☐ RUSH (only confirmed if pre-approved!)
Date Due: ~~1/24/14~~ 2/7/14

Report Information - Data Deliverables

☐ ADEx ☒ EMAIL

Billing Information

☒ Same as Client info PO #:

Regulatory Requirements & Project Information Requirements

☒ Yes ☐ No MA MCP Analytical Methods ☐ Yes ☐ No CT RCP Analytical Methods
☐ Yes ☐ No Matrix Spike Required on this SDG? (Required for MCP Inorganics)
☐ Yes ☐ No GW1 Standards (Info Required for Metals & EPH with Targets)
☐ Yes ☐ No NPDES RGP
☐ Other State /Fed Program MA Criteria MCP

Additional Project Information:

ANALYSIS: VOC: ☒ 8260 ☐ 624 ☐ 524.2; SVOC: ☐ ABN ☐ PAH; METALS: ☐ MCP 13 ☐ MCP 14 ☐ RCP 15; METALS: ☐ RCRA5 ☐ RCRA8 ☐ PP13; EPH: ☐ Ranges & Targets ☐ Ranges Only; VPH: ☐ Ranges & Targets ☐ Ranges Only; ☐ PCB ☐ PEST; TPH: ☐ Quant Only ☐ Fingerprint; PCB (2µm lab-filtered); PCB (0.2µm lab-filtered); PCB (0.45µm field-filtered); PCB (0.2µm lab-filtered)

SAMPLE INFO: Filtration ☒ Field ☒ Lab to do; Preservation ☐ Lab to do

ALPHA Lab ID (Lab Use Only)	Sample ID	Collection Date	Collection Time	Sample Matrix	Sampler Initials	VOC	PCB (2µm lab-filtered)	PCB (0.2µm lab-filtered)	PCB (0.45µm field-filtered)	PCB (0.2µm lab-filtered)	Sample Comments	TOTAL # BOTTLES
01726-01	MW-28	1/16/14	1450	GW	KDJ	X	X	X	X	X		9
-04	DUP-1	1/16/14	1500	GW	KDJ	X	X	X	X	X		9
-07	MW-32	1/17/14	0930	GW	KDJ	X						3
-08,09,10	MW-41	1/17/14	1200	GW	KDJ	X	X	X	X	X		9
-11,12,13	MW-40	1/17/14	16:20	GW	KDJ	X	(H)	(H)	X			9
-14	Trip Blank					X						1
	Container Type					V	A	A	A			
	Preservative					B	A	A	A			

Container Type: P= Plastic, A= Amber glass, V= Vial, G= Glass, B= Bacteria cup, C= Cube, O= Other, E= Encore, D= BOD Bottle

Preservative: A= None, B= HCl, C= HNO_3, D= H_2SO_4, E= NaOH, F= MeOH, G= $NaHSO_4$, H= $Na_2S_2O_3$, I= Ascorbic Acid, J= NH_4Cl, K= Zn Acetate, O= Other

Relinquished By:	Date/Time	Received By:	Date/Time
Kevin Jordan	1/17/14 18:54	[signature]	1-17-14 1854
[signature]	1-17-14 1854	[signature]	1/17/14 1854

All samples submitted are subject to Alpha's Terms and Conditions. See reverse side.

FORM NO: 01-01 (rev. 12-Mar-2012)

ANALYTICAL REPORT

Lab Number:	L1402214
Client:	TRC Environmental Consultants Wannalancit Mills 650 Suffolk Street Lowell, MA 01854
ATTN:	David Sullivan
Phone:	(978) 656-3565
Project Name:	NBHS (PSWS)
Project Number:	115058
Report Date:	01/31/14

The original project report/data package is held by Alpha Analytical. This report/data package is paginated and should be reproduced only in its entirety. Alpha Analytical holds no responsibility for results and/or data that are not consistent with the original.

Certifications & Approvals: MA (M-MA086), NY (11148), CT (PH-0574), NH (2003), NJ NELAP (MA935), RI (LAO00065), ME (MA00086), PA (68-03671), USDA (Permit #P-330-11-00240), NC (666), TX (T104704476), DOD (L2217), US Army Corps of Engineers.

Eight Walkup Drive, Westborough, MA 01581-1019
508-898-9220 (Fax) 508-898-9193 800-624-9220 - www.alphalab.com

Project Name: NBHS (PSWS)
Project Number: 115058

Lab Number: L1402214
Report Date: 01/31/14

Alpha Sample ID	Client ID	Sample Location	Collection Date/Time
L1402214-01	MW-40 (UNFILTERED)	NEW BEDFORD, MA	01/17/14 16:20

Project Name: NBHS (PSWS) **Lab Number:** L1402214

Project Number: 115058 **Report Date:** 01/31/14

MADEP MCP Response Action Analytical Report Certification

This form provides certifications for all samples performed by MCP methods. Please refer to the Sample Results and Container Information sections of this report for specification of MCP methods used for each analysis. The following questions pertain only to MCP Analytical Methods.

An affirmative response to questions A through F is required for "Presumptive Certainty" status		
A	Were all samples received in a condition consistent with those described on the Chain-of-Custody, properly preserved (including temperature) in the field or laboratory, and prepared/analyzed within method holding times?	YES
B	Were the analytical method(s) and all associated QC requirements specified in the selected CAM protocol(s) followed?	YES
C	Were all required corrective actions and analytical response actions specified in the selected CAM protocol(s) implemented for all identified performance standard non-conformances?	YES
D	Does the laboratory report comply with all the reporting requirements specified in CAM VII A, "Quality Assurance and Quality Control Guidelines for the Acquisition and Reporting of Analytical Data?"	YES
E a.	VPH, EPH, and APH Methods only: Was each method conducted without significant modification(s)? (Refer to the individual method(s) for a list of significant modifications).	N/A
E b.	APH and TO-15 Methods only: Was the complete analyte list reported for each method?	N/A
F	Were all applicable CAM protocol QC and performance standard non-conformances identified and evaluated in a laboratory narrative (including all "No" responses to Questions A through E)?	YES

A response to questions G, H and I is required for "Presumptive Certainty" status		
G	Were the reporting limits at or below all CAM reporting limits specified in the selected CAM protocol(s)?	YES
H	Were all QC performance standards specified in the CAM protocol(s) achieved?	YES
I	Were results reported for the complete analyte list specified in the selected CAM protocol(s)?	YES

For any questions answered "No", please refer to the case narrative section on the following page(s).

Please note that sample matrix information is located in the Sample Results section of this report.

Project Name: NBHS (PSWS) **Lab Number:** L1402214
Project Number: 115058 **Report Date:** 01/31/14

Case Narrative

The samples were received in accordance with the Chain of Custody and no significant deviations were encountered during the preparation or analysis unless otherwise noted. Sample Receipt, Container Information, and the Chain of Custody are located at the back of the report.

Results contained within this report relate only to the samples submitted under this Alpha Lab Number and meet all of the requirements of NELAC, for all NELAC accredited parameters. The data presented in this report is organized by parameter (i.e. VOC, SVOC, etc.). Sample specific Quality Control data (i.e. Surrogate Spike Recovery) is reported at the end of the target analyte list for each individual sample, followed by the Laboratory Batch Quality Control at the end of each parameter. If a sample was re-analyzed or re-extracted due to a required quality control corrective action and if both sets of data are reported, the Laboratory ID of the re-analysis or re-extraction is designated with an "R" or "RE", respectively. When multiple Batch Quality Control elements are reported (e.g. more than one LCS), the associated samples for each element are noted in the grey shaded header line of each data table. Any Laboratory Batch, Sample Specific % recovery or RPD value that is outside the listed Acceptance Criteria is bolded in the report. Performance criteria for CAM and RCP methods allow for some LCS compound failures to occur and still be within method compliance. In these instances, the specific failures are not narrated but are noted in the associated QC table. This information is also incorporated in the Data Usability format for our Data Merger tool where it can be reviewed along with any associated usability implications. Soil/sediments, solids and tissues are reported on a dry weight basis unless otherwise noted. Definitions of all data qualifiers and acronyms used in this report are provided in the Glossary located at the back of the report.

In reference to questions H (CAM) or 4 (RCP) when "NO" is checked, the performance criteria for CAM and RCP methods allow for some quality control failures to occur and still be within method compliance. In these instances the specific failure is not narrated but noted in the associated QC table. The information is also incorporated in the Data Usability format of our Data Merger tool where it can be reviewed along with any associated usability implications.

Please see the associated ADEx data file for a comparison of laboratory reporting limits that were achieved with the regulatory Numerical Standards requested on the Chain of Custody.

HOLD POLICY
For samples submitted on hold, Alpha's policy is to hold samples (with the exception of Air canisters) free of charge for 21 calendar days from the date the project is completed. After 21 calendar days, we will dispose of all samples submitted including those put on hold unless you have contacted your Client Service Representative and made arrangements for Alpha to continue to hold the samples. Air canisters will be disposed after 3 business days from the date the project is completed.

Please contact Client Services at 800-624-9220 with any questions.

Project Name: NBHS (PSWS) **Lab Number:** L1402214
Project Number: 115058 **Report Date:** 01/31/14

Case Narrative (continued)

MCP Related Narratives

Report Submission

All MCP required questions were answered with affirmative responses; therefore, there are no relevant protocol-specific QC and/or performance standard non-conformances to report.

I, the undersigned, attest under the pains and penalties of perjury that, to the best of my knowledge and belief and based upon my personal inquiry of those responsible for providing the information contained in this analytical report, such information is accurate and complete. This certificate of analysis is not complete unless this page accompanies any and all pages of this report.

Authorized Signature: Cynthia McQueen

Title: Technical Director/Representative Date: 01/31/14

ORGANICS

PCBS

Project Name: NBHS (PSWS)
Project Number: 115058

Lab Number: L1402214
Report Date: 01/31/14

SAMPLE RESULTS

Lab ID:	L1402214-01	Date Collected:	01/17/14 16:20
Client ID:	MW-40 (UNFILTERED)	Date Received:	01/17/14
Sample Location:	NEW BEDFORD, MA	Field Prep:	Not Specified
Matrix:	Water	Extraction Method:	EPA 3510C
Analytical Method:	97,8082A	Extraction Date:	01/28/14 22:18
Analytical Date:	01/29/14 17:31	Cleanup Method1:	EPA 3665A
Analyst:	KB	Cleanup Date1:	01/29/14
		Cleanup Method2:	EPA 3660B
		Cleanup Date2:	01/29/14

Parameter	Result	Qualifier	Units	RL	MDL	Dilution Factor	Column
MCP Polychlorinated Biphenyls - Westborough Lab							
Aroclor 1016	ND		ug/l	0.250	--	1	A
Aroclor 1221	ND		ug/l	0.250	--	1	A
Aroclor 1232	ND		ug/l	0.250	--	1	A
Aroclor 1242	ND		ug/l	0.250	--	1	A
Aroclor 1248	ND		ug/l	0.250	--	1	A
Aroclor 1254	ND		ug/l	0.250	--	1	A
Aroclor 1260	ND		ug/l	0.250	--	1	A
Aroclor 1262	ND		ug/l	0.250	--	1	A
Aroclor 1268	ND		ug/l	0.250	--	1	A

Surrogate	% Recovery	Qualifier	Acceptance Criteria	Column
2,4,5,6-Tetrachloro-m-xylene	119		30-150	A
Decachlorobiphenyl	141		30-150	A
2,4,5,6-Tetrachloro-m-xylene	112		30-150	B
Decachlorobiphenyl	118		30-150	B

Project Name: NBHS (PSWS)

Project Number: 115058

Lab Number: L1402214

Report Date: 01/31/14

Method Blank Analysis
Batch Quality Control

Analytical Method: 97,8082A
Analytical Date: 01/29/14 17:46
Analyst: KB

Extraction Method: EPA 3510C
Extraction Date: 01/28/14 22:18
Cleanup Method1: EPA 3665A
Cleanup Date1: 01/29/14
Cleanup Method2: EPA 3660B
Cleanup Date2: 01/29/14

Parameter	Result	Qualifier	Units	RL	MDL	Column
MCP Polychlorinated Biphenyls - Westborough Lab for sample(s): 01 Batch: WG667315-1						
Aroclor 1016	ND		ug/l	0.250	--	A
Aroclor 1221	ND		ug/l	0.250	--	A
Aroclor 1232	ND		ug/l	0.250	--	A
Aroclor 1242	ND		ug/l	0.250	--	A
Aroclor 1248	ND		ug/l	0.250	--	A
Aroclor 1254	ND		ug/l	0.250	--	A
Aroclor 1260	ND		ug/l	0.250	--	A
Aroclor 1262	ND		ug/l	0.250	--	A
Aroclor 1268	ND		ug/l	0.250	--	A

Surrogate	%Recovery	Qualifier	Acceptance Criteria	Column
2,4,5,6-Tetrachloro-m-xylene	99		30-150	A
Decachlorobiphenyl	139		30-150	A
2,4,5,6-Tetrachloro-m-xylene	98		30-150	B
Decachlorobiphenyl	117		30-150	B

Lab Control Sample Analysis

Batch Quality Control

Project Name: NBHS (PSWS)

Project Number: 115058

Lab Number: L1402214

Report Date: 01/31/14

Parameter	LCS %Recovery	Qual	LCSD %Recovery	Qual	%Recovery Limits	RPD	Qual	RPD Limits	Column
MCP Polychlorinated Biphenyls - Westborough Lab Associated sample(s): 01 Batch: WG667315-2 WG667315-3									
Aroclor 1016	83		77		40-140	7		20	A
Aroclor 1260	98		100		40-140	2		20	A

Surrogate	LCS %Recovery	Qual	LCSD %Recovery	Qual	Acceptance Criteria	Column
2,4,5,6-Tetrachloro-m-xylene	103		104		30-150	A
Decachlorobiphenyl	133		144		30-150	A
2,4,5,6-Tetrachloro-m-xylene	97		98		30-150	B
Decachlorobiphenyl	111		121		30-150	B

Project Name: NBHS (PSWS)
Project Number: 115058

Lab Number: L1402214
Report Date: 01/31/14

Sample Receipt and Container Information

Were project specific reporting limits specified? YES

Reagent H2O Preserved Vials Frozen on: NA

Cooler Information Custody Seal

Cooler	
A	Absent

Container Information

Container ID	Container Type	Cooler	pH	Temp deg C	Pres	Seal	Analysis(*)
L1402214-01A	Amber 1000ml unpreserved	A	7	4.6	Y	Absent	MCP-8082-10(365)

*Values in parentheses indicate holding time in days

Project Name:	NBHS (PSWS)	**Lab Number:**	L1402214
Project Number:	115058	**Report Date:**	01/31/14

GLOSSARY

Acronyms

EDL	- Estimated Detection Limit: This value represents the level to which target analyte concentrations are reported as estimated values, when those target analyte concentrations are quantified below the reporting limit (RL). The EDL includes any adjustments from dilutions, concentrations or moisture content, where applicable. The use of EDLs is specific to the analysis of PAHs using Solid-Phase Microextraction (SPME).
EPA	- Environmental Protection Agency.
LCS	- Laboratory Control Sample: A sample matrix, free from the analytes of interest, spiked with verified known amounts of analytes or a material containing known and verified amounts of analytes.
LCSD	- Laboratory Control Sample Duplicate: Refer to LCS.
LFB	- Laboratory Fortified Blank: A sample matrix, free from the analytes of interest, spiked with verified known amounts of analytes or a material containing known and verified amounts of analytes.
MDL	- Method Detection Limit: This value represents the level to which target analyte concentrations are reported as estimated values, when those target analyte concentrations are quantified below the reporting limit (RL). The MDL includes any adjustments from dilutions, concentrations or moisture content, where applicable.
MS	- Matrix Spike Sample: A sample prepared by adding a known mass of target analyte to a specified amount of matrix sample for which an independent estimate of target analyte concentration is available.
MSD	- Matrix Spike Sample Duplicate: Refer to MS.
NA	- Not Applicable.
NC	- Not Calculated: Term is utilized when one or more of the results utilized in the calculation are non-detect at the parameter's reporting unit.
NI	- Not Ignitable.
RL	- Reporting Limit: The value at which an instrument can accurately measure an analyte at a specific concentration. The RL includes any adjustments from dilutions, concentrations or moisture content, where applicable.
RPD	- Relative Percent Difference: The results from matrix and/or matrix spike duplicates are primarily designed to assess the precision of analytical results in a given matrix and are expressed as relative percent difference (RPD). Values which are less than five times the reporting limit for any individual parameter are evaluated by utilizing the absolute difference between the values; although the RPD value will be provided in the report.
SRM	- Standard Reference Material: A reference sample of a known or certified value that is of the same or similar matrix as the associated field samples.

Footnotes

1	- The reference for this analyte should be considered modified since this analyte is absent from the target analyte list of the original method.

Terms

Analytical Method: Both the document from which the method originates and the analytical reference method. (Example: EPA 8260B is shown as 1,8260B.) The codes for the reference method documents are provided in the References section of the Addendum.

Data Qualifiers

A	- Spectra identified as "Aldol Condensation Product".
B	- The analyte was detected above the reporting limit in the associated method blank. Flag only applies to associated field samples that have detectable concentrations of the analyte at less than ten times (10x) the concentration found in the blank. For MCP-related projects, flag only applies to associated field samples that have detectable concentrations of the analyte at less than ten times (10x) the concentration found in the blank. For DOD-related projects, flag only applies to associated field samples that have detectable concentrations of the analyte at less than ten times (10x) the concentration found in the blank AND the analyte was detected above one-half the reporting limit (or above the reporting limit for common lab contaminants) in the associated method blank. For NJ-Air-related projects, flag only applies to associated field samples that have detectable concentrations of the analyte above the reporting limit.
C	- Co-elution: The target analyte co-elutes with a known lab standard (i.e. surrogate, internal standards, etc.) for co-extracted analyses.
D	- Concentration of analyte was quantified from diluted analysis. Flag only applies to field samples that have detectable concentrations of the analyte.
E	- Concentration of analyte exceeds the range of the calibration curve and/or linear range of the instrument.
G	- The concentration may be biased high due to matrix interferences (i.e, co-elution) with non-target compound(s). The result should be considered estimated.
H	- The analysis of pH was performed beyond the regulatory-required holding time of 15 minutes from the time of sample collection.
I	- The lower value for the two columns has been reported due to obvious interference.

Report Format: Data Usability Report

Project Name:	NBHS (PSWS)	**Lab Number:**	L1402214
Project Number:	115058	**Report Date:**	01/31/14

Data Qualifiers

M - Reporting Limit (RL) exceeds the MCP CAM Reporting Limit for this analyte.

NJ - Presumptive evidence of compound. This represents an estimated concentration for Tentatively Identified Compounds (TICs), where the identification is based on a mass spectral library search.

P - The RPD between the results for the two columns exceeds the method-specified criteria.

Q - The quality control sample exceeds the associated acceptance criteria. For DOD-related projects, LCS and/or Continuing Calibration Standard exceedences are also qualified on all associated sample results. Note: This flag is not applicable for matrix spike recoveries when the sample concentration is greater than 4x the spike added or for batch duplicate RPD when the sample concentrations are less than 5x the RL. (Metals only.)

R - Analytical results are from sample re-analysis.

RE - Analytical results are from sample re-extraction.

S - Analytical results are from modified screening analysis.

J - Estimated value. This represents an estimated concentration for Tentatively Identified Compounds (TICs).

ND - Not detected at the reporting limit (RL) for the sample.

Report Format: Data Usability Report

Project Name: NBHS (PSWS) **Lab Number:** L1402214
Project Number: 115058 **Report Date:** 01/31/14

REFERENCES

97 EPA Test Methods (SW-846) with QC Requirements & Performance Standards for the Analysis of EPA SW-846 Methods under the Massachusetts Contingency Plan, WSC-CAM-IIA, IIB, IIIA, IIIB, IIIC, IIID, VA, VB, VC, VIA, VIB, VIIIA and VIIIB, July 2010.

LIMITATION OF LIABILITIES

Alpha Analytical performs services with reasonable care and diligence normal to the analytical testing laboratory industry. In the event of an error, the sole and exclusive responsibility of Alpha Analytical shall be to re-perform the work at it's own expense. In no event shall Alpha Analytical be held liable for any incidental, consequential or special damages, including but not limited to, damages in any way connected with the use of, interpretation of, information or analysis provided by Alpha Analytical.

We strongly urge our clients to comply with EPA protocol regarding sample volume, preservation, cooling, containers, sampling procedures, holding time and splitting of samples in the field.

Certification Information

Last revised December 11, 2013

The following analytes are not included in our NELAP Scope of Accreditation:

Westborough Facility
EPA 524.2: Acetone, 2-Butanone (Methyl ethyl ketone (MEK)), Tert-butyl alcohol, 2-Hexanone, Tetrahydrofuran, 1,3,5-Trichlorobenzene, 4-Methyl-2-pentanone (MIBK), Carbon disulfide, Diethyl ether.
EPA 8260C: 1,2,4,5-Tetramethylbenzene, 4-Ethyltoluene, Iodomethane (methyl iodide), Methyl methacrylate, Azobenzene.
EPA 8330A/B: PETN, Picric Acid, Nitroglycerine, 2,6-DANT, 2,4-DANT.
EPA 8270D: 1-Methylnaphthalene, Dimethylnaphthalene,1,4-Diphenylhydrazine.
EPA 625: 4-Chloroaniline, 4-Methylphenol.
SM4500: Soil: Total Phosphorus, TKN, NO2, NO3.
EPA 9071: Total Petroleum Hydrocarbons, Oil & Grease.

Mansfield Facility
EPA 8270D: Biphenyl.
EPA TO-15: Halothane, 2,4,4-Trimethyl-2-pentene, 2,4,4-Trimethyl-1-pentene, Thiophene, 2-Methylthiophene, 3-Methylthiophene, 2-Ethylthiophene, 1,2,3-Trimethylbenzene, Indan, Indene, 1,2,4,5-Tetramethylbenzene, Benzothiophene, 1-Methylnaphthalene.

The following analytes are included in our Massachusetts DEP Scope of Accreditation, Westborough Facility:

Drinking Water
EPA 200.8: Sb,As,Ba,Be,Cd,Cr,Cu,Pb,Ni,Se,Tl; **EPA 200.7**: Ba,Be,Ca,Cd,Cr,Cu,Na; **EPA 245.1:** Mercury;
EPA 300.0: Nitrate-N, Fluoride, Sulfate; **EPA 353.2**: Nitrate-N, Nitrite-N; **SM4500NO3-F**: Nitrate-N, Nitrite-N; **SM4500F-C, SM4500CN-CE, EPA 180.1, SM2130B, SM4500Cl-D, SM2320B, SM2540C, SM4500H-B**
EPA 332: Perchlorate.
Microbiology: **SM9215B; SM9223-P/A, SM9223B-Colilert-QT, Enterolert-QT.**

Non-Potable Water
EPA 200.8: Al,Sb,As,Be,Cd,Cr,Cu,Pb,Mn,Ni,Se,Ag,Tl,Zn;
EPA 200.7: Al,Sb,As,Be,Cd,Ca,Cr,Co,Cu,Fe,Pb,Mg,Mn,Mo,Ni,K,Se,Ag,Na,Sr,Ti,Tl,V,Zn;
EPA 245.1, SM4500H,B, EPA 120.1, SM2510B, SM2540C, SM2340B, SM2320B, SM4500CL-E, SM4500F-BC, SM426C, SM4500NH3-BH, **EPA 350.1**: Ammonia-N, **LACHAT 10-107-06-1-B**: Ammonia-N, **SM4500NO3-F,**
EPA 353.2: Nitrate-N**, SM4500NH3-BC-NES, EPA 351.1, SM4500P-E, SM4500P-B, E, SM5220D, EPA 410.4, SM5210B, SM5310C, SM4500CL-D, EPA 1664, SM14 510AC, EPA 420.1, SM4500-CN-CE, SM2540D.**
EPA 624: Volatile Halocarbons & Aromatics,
EPA 608: Chlordane, Toxaphene, Aldrin, alpha-BHC, beta-BHC, gamma-BHC, delta-BHC, Dieldrin, DDD, DDE, DDT, Endosulfan I, Endosulfan II, Endosulfan sulfate, Endrin, Endrin Aldehyde, Heptachlor, Heptachlor Epoxide, PCBs
EPA 625: SVOC (Acid/Base/Neutral Extractables), **EPA 600/4-81-045**: PCB-Oil.
Microbiology: **SM9223B-Colilert-QT; Enterolert-QT, SM9222D-MF**.

For a complete listing of analytes and methods, please contact your Alpha Project Manager.

revised 1/24/14 CW

Serial No:01311410:46

L1402214

CHAIN OF CUSTODY

PAGE 1 OF 1

Date Rec'd in Lab: 1/17/14

ALPHA Job #: ~~L1401726~~ JW 1/27/14

8 Walkup Drive
Westboro, MA 01581
Tel: 508-898-9220

320 Forbes Blvd
Mansfield, MA 02048
Tel: 508-822-9300

Client Information

Client: TRC

Address: 650 Suffolk St.
Lowell, MA 01854

Phone: 978-970-5600

Email: dsullivan@trcsolutions.com
aleonard

Additional Project Information:

Project Information

Project Name: NBHS (PSWS)

Project Location: New Bedford, MA

Project #: 115058

Project Manager: AL Leonard, David Sullivan

ALPHA Quote #:

Turn-Around Time

☒ Standard ☐ RUSH (only confirmed if pre-approved)

Date Due: ~~1/24/14~~ ~~2/3/14~~ JW 1/27/14 JW 1/27/14
1/31/14

Report Information - Data Deliverables

☐ ADEx ☒ EMAIL

Billing Information

☒ Same as Client info PO #:

Regulatory Requirements & Project Information Requirements

☒ Yes ☐ No MA MCP Analytical Methods ☐ Yes ☐ No CT RCP Analytical Methods
☐ Yes ☐ No Matrix Spike Required on this SDG? (Required for MCP Inorganics)
☐ Yes ☐ No GW1 Standards (Info Required for Metals & EPH with Targets)
☐ Yes ☐ No NPDES RGP
☐ Other State /Fed Program MA Criteria MCP

ANALYSIS

VOC: ~~☐ 624~~ ☐ 524.2
SVOC: ☐ ABN ☐ PAH
METALS: ☐ MCP 13 ☐ MCP 14 ☐ RCP 15
METALS: ☐ RCRA5 ☐ RCRA8 ☐ PP13
EPH: ☐ Ranges & Targets ☐ Ranges Only
VPH: ☐ Ranges & Targets ☐ Ranges Only
☐ PCB ☐ PEST
TPH: ☐ Quant Only ☐ Fingerprint
PCB (0.2µm lab-filtered)
PCB (0.2µm lab-filtered)
PCB (0.45µm field-filtered)
PCB

SAMPLE INFO
Filtration
☒ Field
☒ Lab to do
Preservation
☐ Lab to do

ALPHA Lab ID (Lab Use Only)	Sample ID	Collection Date	Collection Time	Sample Matrix	Sampler Initials	VOC	SVOC	METALS	METALS	EPH	VPH	PCB	TPH	PCB (0.2µm lab-filtered)	PCB (0.2µm lab-filtered)	PCB (0.45µm field-filtered)	PCB			Sample Comments	TOTAL # BOTTLES
~~01726~~ -01	MW-28	1/16/14	1450	GW	KDJ	X								X	X	X					9
-04	DUP-1	1/16/14	1500	GW	KDJ	X								X	X	X					9
-07	MW-32	1/17/14	0930	GW	KDJ	X															3
-08,-09,-10	MW-41	1/17/14	1200	GW	KDJ	X								X	X	X					9
L1402214-01 -11,-12,-13	MW-40	1/17/14	16:20	GW	KDJ	X								(H)	(H)	X	✓				9
-14	Trip Blank					X															1
JW 1/27/14																					

Container Type	V									A	A	A					
Preservative	B									A	A	A					

Container Type
P= Plastic
A= Amber glass
V= Vial
G= Glass
B= Bacteria cup
C= Cube
O= Other
E= Encore
D= BOD Bottle

Preservative
A= None
B= HCl
C= HNO_3
D= H_2SO_4
E= NaOH
F= MeOH
G= $NaHSO_4$
H = $Na_2S_2O_3$
I= Ascorbic Acid
J = NH_4Cl
K= Zn Acetate
O= Other

Relinquished By:	Date/Time	Received By:	Date/Time
Karen Jordan	1/17/14 18:54	[signature]	1-17-14 1854
[signature]	1-17-14 1854	[signature]	1/17/14 1854

All samples submitted are subject to Alpha's Terms and Conditions. See reverse side.

FORM NO: 01-01 (rev. 12-Mar-2012)

ANALYTICAL REPORT

Lab Number:	L1403530
Client:	TRC Environmental Consultants Wannalancit Mills 650 Suffolk Street Lowell, MA 01854
ATTN:	David Sullivan
Phone:	(978) 656-3565
Project Name:	NBHS IRA PSWS
Project Number:	115058
Report Date:	02/25/14

The original project report/data package is held by Alpha Analytical. This report/data package is paginated and should be reproduced only in its entirety. Alpha Analytical holds no responsibility for results and/or data that are not consistent with the original.

Certifications & Approvals: MA (M-MA086), NY (11148), CT (PH-0574), NH (2003), NJ NELAP (MA935), RI (LAO00065), ME (MA00086), PA (68-03671), USDA (Permit #P-330-11-00240), NC (666), TX (T104704476), DOD (L2217), US Army Corps of Engineers.

Eight Walkup Drive, Westborough, MA 01581-1019
508-898-9220 (Fax) 508-898-9193 800-624-9220 - www.alphalab.com

Project Name: NBHS IRA PSWS
Project Number: 115058

Lab Number: L1403530
Report Date: 02/25/14

Alpha Sample ID	Client ID	Sample Location	Collection Date/Time
L1403530-01	INFLUENT	NEW BEDFORD, MA	02/14/14 08:00
L1403530-02	INFLUENT (LAB FILTERED 0.2)	NEW BEDFORD, MA	02/14/14 08:00
L1403530-03	EFFLUENT	NEW BEDFORD, MA	02/14/14 08:10
L1403530-04	MW-27R	NEW BEDFORD, MA	02/14/14 09:55
L1403530-05	MW-27R (LAB FILTERED 0.2)	NEW BEDFORD, MA	02/14/14 09:55
L1403530-06	MW-27R (FIELD FILTERED 0.45)	NEW BEDFORD, MA	02/14/14 09:55
L1403530-07	MW-42R	NEW BEDFORD, MA	02/14/14 10:50
L1403530-08	MW-42R (LAB FILTERED 0.2)	NEW BEDFORD, MA	02/14/14 10:50
L1403530-09	MW-42R (FIELD FILTERED 0.45)	NEW BEDFORD, MA	02/14/14 10:50
L1403530-10	TRIP BLANK	NEW BEDFORD, MA	02/14/14 00:00

Project Name: NBHS IRA PSWS **Lab Number:** L1403530

Project Number: 115058 **Report Date:** 02/25/14

MADEP MCP Response Action Analytical Report Certification

This form provides certifications for all samples performed by MCP methods. Please refer to the Sample Results and Container Information sections of this report for specification of MCP methods used for each analysis. The following questions pertain only to MCP Analytical Methods.

An affirmative response to questions A through F is required for "Presumptive Certainty" status		
A	Were all samples received in a condition consistent with those described on the Chain-of-Custody, properly preserved (including temperature) in the field or laboratory, and prepared/analyzed within method holding times?	YES
B	Were the analytical method(s) and all associated QC requirements specified in the selected CAM protocol(s) followed?	YES
C	Were all required corrective actions and analytical response actions specified in the selected CAM protocol(s) implemented for all identified performance standard non-conformances?	YES
D	Does the laboratory report comply with all the reporting requirements specified in CAM VII A, "Quality Assurance and Quality Control Guidelines for the Acquisition and Reporting of Analytical Data?"	YES
E a.	VPH, EPH, and APH Methods only: Was each method conducted without significant modification(s)? (Refer to the individual method(s) for a list of significant modifications).	N/A
E b.	APH and TO-15 Methods only: Was the complete analyte list reported for each method?	N/A
F	Were all applicable CAM protocol QC and performance standard non-conformances identified and evaluated in a laboratory narrative (including all "No" responses to Questions A through E)?	YES

A response to questions G, H and I is required for "Presumptive Certainty" status		
G	Were the reporting limits at or below all CAM reporting limits specified in the selected CAM protocol(s)?	NO
H	Were all QC performance standards specified in the CAM protocol(s) achieved?	NO
I	Were results reported for the complete analyte list specified in the selected CAM protocol(s)?	YES

For any questions answered "No", please refer to the case narrative section on the following page(s).

Please note that sample matrix information is located in the Sample Results section of this report.

Project Name: NBHS IRA PSWS **Lab Number:** L1403530
Project Number: 115058 **Report Date:** 02/25/14

Case Narrative

The samples were received in accordance with the Chain of Custody and no significant deviations were encountered during the preparation or analysis unless otherwise noted. Sample Receipt, Container Information, and the Chain of Custody are located at the back of the report.

Results contained within this report relate only to the samples submitted under this Alpha Lab Number and meet all of the requirements of NELAC, for all NELAC accredited parameters. The data presented in this report is organized by parameter (i.e. VOC, SVOC, etc.). Sample specific Quality Control data (i.e. Surrogate Spike Recovery) is reported at the end of the target analyte list for each individual sample, followed by the Laboratory Batch Quality Control at the end of each parameter. If a sample was re-analyzed or re-extracted due to a required quality control corrective action and if both sets of data are reported, the Laboratory ID of the re-analysis or re-extraction is designated with an "R" or "RE", respectively. When multiple Batch Quality Control elements are reported (e.g. more than one LCS), the associated samples for each element are noted in the grey shaded header line of each data table. Any Laboratory Batch, Sample Specific % recovery or RPD value that is outside the listed Acceptance Criteria is bolded in the report. Performance criteria for CAM and RCP methods allow for some LCS compound failures to occur and still be within method compliance. In these instances, the specific failures are not narrated but are noted in the associated QC table. This information is also incorporated in the Data Usability format for our Data Merger tool where it can be reviewed along with any associated usability implications. Soil/sediments, solids and tissues are reported on a dry weight basis unless otherwise noted. Definitions of all data qualifiers and acronyms used in this report are provided in the Glossary located at the back of the report.

In reference to questions H (CAM) or 4 (RCP) when "NO" is checked, the performance criteria for CAM and RCP methods allow for some quality control failures to occur and still be within method compliance. In these instances the specific failure is not narrated but noted in the associated QC table. The information is also incorporated in the Data Usability format of our Data Merger tool where it can be reviewed along with any associated usability implications.

Please see the associated ADEx data file for a comparison of laboratory reporting limits that were achieved with the regulatory Numerical Standards requested on the Chain of Custody.

HOLD POLICY
For samples submitted on hold, Alpha's policy is to hold samples (with the exception of Air canisters) free of charge for 21 calendar days from the date the project is completed. After 21 calendar days, we will dispose of all samples submitted including those put on hold unless you have contacted your Client Service Representative and made arrangements for Alpha to continue to hold the samples. Air canisters will be disposed after 3 business days from the date the project is completed.

Please contact Client Services at 800-624-9220 with any questions.

Project Name:	NBHS IRA PSWS	**Lab Number:**	L1403530
Project Number:	115058	**Report Date:**	02/25/14

Case Narrative (continued)

MCP Related Narratives

Volatile Organics

L1403530-03 has elevated detection limits due to the dilution required by the elevated concentrations of target compounds in the sample.

L1403530-03 was re-analyzed on dilution in order to quantify the sample within the calibration range. The results should be considered estimated, and are qualified with an E flag, for any compounds that exceeded the calibration range in the initial analysis. The re-analysis was performed only for the compound that exceeded the calibration range.

In reference to question G:

L1403530-03: Methylene chloride, trichlorofluoromethane, 1,1-dichloropropene, bromoform, chloromethane, bromomethane, chloroethane, methyl tert butyl ether, p/m-xylene, dibromomethane, 1,2,3-trichloropropane, dichlorodifluoromethane, carbon disulfide, bromochloromethane, 2,2-dichloropropane, 1,2-dibromoethane, 1,3-dichloropropane, bromobenzene, n-butylbenzene, sec-butylbenzene, tert-butylbenzene, o-chlorotoluene, p-chlorotoluene, 1,2-dibromo-3-chloropropane, isopropylbenzene, p-isopropyltoluene, naphthalene, n-propylbenzene, 1,2,3-trichlorobenzene, 1,2,4-trichlorobenzene, 1,3,5-trimethylbenzene, 1,2,4-trimethylbenzene, ethyl ether, isopropyl ether, ethyl-tert-butyl-ether and tertiary-amyl methyl ether did not achieve the requested CAM reporting limits.

In reference to question H:

The initial calibration, associated with L1403530-01, -03, -04, -07 and -10, did not meet the method required minimum response factor on the lowest calibration standard for 1,4-dioxane (0.00396), as well as the average response factor for 1,4-dioxane. In addition a quadratic fit was utilized for acetone.

The continuing calibration standard, associated with L1403530-01, -03, -04, -07 and -10, is outside the acceptance criteria for several compounds; however, it is within overall method allowances. A copy of the continuing calibration standard is included as an addendum to this report.

PCBs

L1403530-01, -04 and -07 have elevated detection limits due to the dilutions required by the elevated concentrations of target compounds in the samples.

Project Name:	NBHS IRA PSWS	**Lab Number:**	L1403530
Project Number:	115058	**Report Date:**	02/25/14

Case Narrative (continued)

In reference to question G:

L1403530-01, -04 and -07: All target analytes, with the exception of Aroclor 1254, did not achieve the requested CAM reporting limits.

In reference to question H:

The surrogate recoveries for L1403530-01 are below the acceptance criteria (30-150%) for 2,4,5,6-tetrachloro-m-xylene (0%) and decachlorobiphenyl (0%) due to the dilution required to quantitate the sample. Re-extraction was not required; therefore, the results of the original analysis are reported.

I, the undersigned, attest under the pains and penalties of perjury that, to the best of my knowledge and belief and based upon my personal inquiry of those responsible for providing the information contained in this analytical report, such information is accurate and complete. This certificate of analysis is not complete unless this page accompanies any and all pages of this report.

Authorized Signature: Michelle M. Morris

Title: Technical Director/Representative

Date: 02/25/14

ORGANICS

VOLATILES

Project Name: NBHS IRA PSWS **Lab Number:** L1403530

Project Number: 115058 **Report Date:** 02/25/14

SAMPLE RESULTS

Lab ID:	L1403530-01	Date Collected:	02/14/14 08:00
Client ID:	INFLUENT	Date Received:	02/14/14
Sample Location:	NEW BEDFORD, MA	Field Prep:	Not Specified
Matrix:	Water		
Analytical Method:	97,8260C		
Analytical Date:	02/17/14 11:24		
Analyst:	MM		

Parameter	Result	Qualifier	Units	RL	MDL	Dilution Factor
MCP Volatile Organics - Westborough Lab						
Methylene chloride	ND		ug/l	2.0	--	1
1,1-Dichloroethane	ND		ug/l	1.0	--	1
Chloroform	ND		ug/l	1.0	--	1
Carbon tetrachloride	ND		ug/l	1.0	--	1
1,2-Dichloropropane	ND		ug/l	1.0	--	1
Dibromochloromethane	ND		ug/l	1.0	--	1
1,1,2-Trichloroethane	ND		ug/l	1.0	--	1
Tetrachloroethene	ND		ug/l	1.0	--	1
Chlorobenzene	ND		ug/l	1.0	--	1
Trichlorofluoromethane	ND		ug/l	2.0	--	1
1,2-Dichloroethane	ND		ug/l	1.0	--	1
1,1,1-Trichloroethane	ND		ug/l	1.0	--	1
Bromodichloromethane	ND		ug/l	1.0	--	1
trans-1,3-Dichloropropene	ND		ug/l	0.50	--	1
cis-1,3-Dichloropropene	ND		ug/l	0.50	--	1
1,1-Dichloropropene	ND		ug/l	2.0	--	1
Bromoform	ND		ug/l	2.0	--	1
1,1,2,2-Tetrachloroethane	ND		ug/l	1.0	--	1
Benzene	ND		ug/l	0.50	--	1
Toluene	1.6		ug/l	1.0	--	1
Ethylbenzene	ND		ug/l	1.0	--	1
Chloromethane	ND		ug/l	2.0	--	1
Bromomethane	ND		ug/l	2.0	--	1
Vinyl chloride	ND		ug/l	1.0	--	1
Chloroethane	ND		ug/l	2.0	--	1
1,1-Dichloroethene	ND		ug/l	1.0	--	1
trans-1,2-Dichloroethene	ND		ug/l	1.0	--	1
Trichloroethene	ND		ug/l	1.0	--	1
1,2-Dichlorobenzene	ND		ug/l	1.0	--	1
1,3-Dichlorobenzene	1.8		ug/l	1.0	--	1
1,4-Dichlorobenzene	6.6		ug/l	1.0	--	1

Project Name: NBHS IRA PSWS **Lab Number:** L1403530

Project Number: 115058 **Report Date:** 02/25/14

SAMPLE RESULTS

Lab ID: L1403530-01 Date Collected: 02/14/14 08:00

Client ID: INFLUENT Date Received: 02/14/14

Sample Location: NEW BEDFORD, MA Field Prep: Not Specified

Parameter	Result	Qualifier	Units	RL	MDL	Dilution Factor
MCP Volatile Organics - Westborough Lab						
Methyl tert butyl ether	ND		ug/l	2.0	--	1
p/m-Xylene	ND		ug/l	2.0	--	1
o-Xylene	ND		ug/l	1.0	--	1
cis-1,2-Dichloroethene	1.7		ug/l	1.0	--	1
Dibromomethane	ND		ug/l	2.0	--	1
1,2,3-Trichloropropane	ND		ug/l	2.0	--	1
Styrene	ND		ug/l	1.0	--	1
Dichlorodifluoromethane	ND		ug/l	2.0	--	1
Acetone	ND		ug/l	5.0	--	1
Carbon disulfide	ND		ug/l	2.0	--	1
2-Butanone	ND		ug/l	5.0	--	1
4-Methyl-2-pentanone	ND		ug/l	5.0	--	1
2-Hexanone	ND		ug/l	5.0	--	1
Bromochloromethane	ND		ug/l	2.0	--	1
Tetrahydrofuran	ND		ug/l	2.0	--	1
2,2-Dichloropropane	ND		ug/l	2.0	--	1
1,2-Dibromoethane	ND		ug/l	2.0	--	1
1,3-Dichloropropane	ND		ug/l	2.0	--	1
1,1,1,2-Tetrachloroethane	ND		ug/l	1.0	--	1
Bromobenzene	ND		ug/l	2.0	--	1
n-Butylbenzene	ND		ug/l	2.0	--	1
sec-Butylbenzene	ND		ug/l	2.0	--	1
tert-Butylbenzene	ND		ug/l	2.0	--	1
o-Chlorotoluene	ND		ug/l	2.0	--	1
p-Chlorotoluene	ND		ug/l	2.0	--	1
1,2-Dibromo-3-chloropropane	ND		ug/l	2.0	--	1
Hexachlorobutadiene	ND		ug/l	0.60	--	1
Isopropylbenzene	ND		ug/l	2.0	--	1
p-Isopropyltoluene	ND		ug/l	2.0	--	1
Naphthalene	ND		ug/l	2.0	--	1
n-Propylbenzene	ND		ug/l	2.0	--	1
1,2,3-Trichlorobenzene	ND		ug/l	2.0	--	1
1,2,4-Trichlorobenzene	5.0		ug/l	2.0	--	1
1,3,5-Trimethylbenzene	ND		ug/l	2.0	--	1
1,2,4-Trimethylbenzene	ND		ug/l	2.0	--	1
Ethyl ether	ND		ug/l	2.0	--	1
Isopropyl Ether	ND		ug/l	2.0	--	1
Ethyl-Tert-Butyl-Ether	ND		ug/l	2.0	--	1
Tertiary-Amyl Methyl Ether	ND		ug/l	2.0	--	1

Project Name: NBHS IRA PSWS **Lab Number:** L1403530

Project Number: 115058 **Report Date:** 02/25/14

SAMPLE RESULTS

Lab ID:	L1403530-01	Date Collected:	02/14/14 08:00
Client ID:	INFLUENT	Date Received:	02/14/14
Sample Location:	NEW BEDFORD, MA	Field Prep:	Not Specified

Parameter	Result	Qualifier	Units	RL	MDL	Dilution Factor
MCP Volatile Organics - Westborough Lab						
1,4-Dioxane	ND		ug/l	250	--	1

Surrogate	% Recovery	Qualifier	Acceptance Criteria
1,2-Dichloroethane-d4	103		70-130
Toluene-d8	91		70-130
4-Bromofluorobenzene	95		70-130
Dibromofluoromethane	122		70-130

Project Name: NBHS IRA PSWS **Lab Number:** L1403530

Project Number: 115058 **Report Date:** 02/25/14

SAMPLE RESULTS

Lab ID:	L1403530-03	D2	Date Collected:	02/14/14 08:10
Client ID:	EFFLUENT		Date Received:	02/14/14
Sample Location:	NEW BEDFORD, MA		Field Prep:	Not Specified
Matrix:	Water			
Analytical Method:	97,8260C			
Analytical Date:	02/18/14 13:54			
Analyst:	MM			

Parameter	Result	Qualifier	Units	RL	MDL	Dilution Factor
MCP Volatile Organics - Westborough Lab						
cis-1,2-Dichloroethene	250		ug/l	10	--	10

Surrogate	% Recovery	Qualifier	Acceptance Criteria
1,2-Dichloroethane-d4	104		70-130
Toluene-d8	91		70-130
4-Bromofluorobenzene	97		70-130
Dibromofluoromethane	122		70-130

Project Name: NBHS IRA PSWS **Lab Number:** L1403530

Project Number: 115058 **Report Date:** 02/25/14

SAMPLE RESULTS

Lab ID:	L1403530-03	D	Date Collected:	02/14/14 08:10
Client ID:	EFFLUENT		Date Received:	02/14/14
Sample Location:	NEW BEDFORD, MA		Field Prep:	Not Specified
Matrix:	Water			
Analytical Method:	97,8260C			
Analytical Date:	02/17/14 11:56			
Analyst:	MM			

Parameter	Result	Qualifier	Units	RL	MDL	Dilution Factor
MCP Volatile Organics - Westborough Lab						
Methylene chloride	ND		ug/l	4.0	--	2
1,1-Dichloroethane	ND		ug/l	2.0	--	2
Chloroform	ND		ug/l	2.0	--	2
Carbon tetrachloride	ND		ug/l	2.0	--	2
1,2-Dichloropropane	ND		ug/l	2.0	--	2
Dibromochloromethane	ND		ug/l	2.0	--	2
1,1,2-Trichloroethane	ND		ug/l	2.0	--	2
Tetrachloroethene	ND		ug/l	2.0	--	2
Chlorobenzene	ND		ug/l	2.0	--	2
Trichlorofluoromethane	ND		ug/l	4.0	--	2
1,2-Dichloroethane	ND		ug/l	2.0	--	2
1,1,1-Trichloroethane	ND		ug/l	2.0	--	2
Bromodichloromethane	ND		ug/l	2.0	--	2
trans-1,3-Dichloropropene	ND		ug/l	1.0	--	2
cis-1,3-Dichloropropene	ND		ug/l	1.0	--	2
1,1-Dichloropropene	ND		ug/l	4.0	--	2
Bromoform	ND		ug/l	4.0	--	2
1,1,2,2-Tetrachloroethane	ND		ug/l	2.0	--	2
Benzene	ND		ug/l	1.0	--	2
Toluene	ND		ug/l	2.0	--	2
Ethylbenzene	ND		ug/l	2.0	--	2
Chloromethane	ND		ug/l	4.0	--	2
Bromomethane	ND		ug/l	4.0	--	2
Vinyl chloride	ND		ug/l	2.0	--	2
Chloroethane	ND		ug/l	4.0	--	2
1,1-Dichloroethene	ND		ug/l	2.0	--	2
trans-1,2-Dichloroethene	26		ug/l	2.0	--	2
Trichloroethene	ND		ug/l	2.0	--	2
1,2-Dichlorobenzene	ND		ug/l	2.0	--	2
1,3-Dichlorobenzene	ND		ug/l	2.0	--	2
1,4-Dichlorobenzene	ND		ug/l	2.0	--	2

Project Name: NBHS IRA PSWS **Lab Number:** L1403530

Project Number: 115058 **Report Date:** 02/25/14

SAMPLE RESULTS

Lab ID: L1403530-03 D Date Collected: 02/14/14 08:10

Client ID: EFFLUENT Date Received: 02/14/14

Sample Location: NEW BEDFORD, MA Field Prep: Not Specified

Parameter	Result	Qualifier	Units	RL	MDL	Dilution Factor
MCP Volatile Organics - Westborough Lab						
Methyl tert butyl ether	ND		ug/l	4.0	--	2
p/m-Xylene	ND		ug/l	4.0	--	2
o-Xylene	ND		ug/l	2.0	--	2
cis-1,2-Dichloroethene	230	E	ug/l	2.0	--	2
Dibromomethane	ND		ug/l	4.0	--	2
1,2,3-Trichloropropane	ND		ug/l	4.0	--	2
Styrene	ND		ug/l	2.0	--	2
Dichlorodifluoromethane	ND		ug/l	4.0	--	2
Acetone	ND		ug/l	10	--	2
Carbon disulfide	ND		ug/l	4.0	--	2
2-Butanone	ND		ug/l	10	--	2
4-Methyl-2-pentanone	ND		ug/l	10	--	2
2-Hexanone	ND		ug/l	10	--	2
Bromochloromethane	ND		ug/l	4.0	--	2
Tetrahydrofuran	8.8		ug/l	4.0	--	2
2,2-Dichloropropane	ND		ug/l	4.0	--	2
1,2-Dibromoethane	ND		ug/l	4.0	--	2
1,3-Dichloropropane	ND		ug/l	4.0	--	2
1,1,1,2-Tetrachloroethane	ND		ug/l	2.0	--	2
Bromobenzene	ND		ug/l	4.0	--	2
n-Butylbenzene	ND		ug/l	4.0	--	2
sec-Butylbenzene	ND		ug/l	4.0	--	2
tert-Butylbenzene	ND		ug/l	4.0	--	2
o-Chlorotoluene	ND		ug/l	4.0	--	2
p-Chlorotoluene	ND		ug/l	4.0	--	2
1,2-Dibromo-3-chloropropane	ND		ug/l	4.0	--	2
Hexachlorobutadiene	ND		ug/l	1.2	--	2
Isopropylbenzene	ND		ug/l	4.0	--	2
p-Isopropyltoluene	ND		ug/l	4.0	--	2
Naphthalene	ND		ug/l	4.0	--	2
n-Propylbenzene	ND		ug/l	4.0	--	2
1,2,3-Trichlorobenzene	ND		ug/l	4.0	--	2
1,2,4-Trichlorobenzene	ND		ug/l	4.0	--	2
1,3,5-Trimethylbenzene	ND		ug/l	4.0	--	2
1,2,4-Trimethylbenzene	ND		ug/l	4.0	--	2
Ethyl ether	ND		ug/l	4.0	--	2
Isopropyl Ether	ND		ug/l	4.0	--	2
Ethyl-Tert-Butyl-Ether	ND		ug/l	4.0	--	2
Tertiary-Amyl Methyl Ether	ND		ug/l	4.0	--	2

Project Name: NBHS IRA PSWS **Lab Number:** L1403530

Project Number: 115058 **Report Date:** 02/25/14

SAMPLE RESULTS

Lab ID:	L1403530-03	D	Date Collected:	02/14/14 08:10
Client ID:	EFFLUENT		Date Received:	02/14/14
Sample Location:	NEW BEDFORD, MA		Field Prep:	Not Specified

Parameter	Result	Qualifier	Units	RL	MDL	Dilution Factor
MCP Volatile Organics - Westborough Lab						
1,4-Dioxane	ND		ug/l	500	--	2

Surrogate	% Recovery	Qualifier	Acceptance Criteria
1,2-Dichloroethane-d4	108		70-130
Toluene-d8	89		70-130
4-Bromofluorobenzene	94		70-130
Dibromofluoromethane	122		70-130

Project Name: NBHS IRA PSWS **Lab Number:** L1403530

Project Number: 115058 **Report Date:** 02/25/14

SAMPLE RESULTS

Lab ID:	L1403530-04	Date Collected:	02/14/14 09:55
Client ID:	MW-27R	Date Received:	02/14/14
Sample Location:	NEW BEDFORD, MA	Field Prep:	Not Specified
Matrix:	Water		
Analytical Method:	97,8260C		
Analytical Date:	02/17/14 12:29		
Analyst:	MM		

Parameter	Result	Qualifier	Units	RL	MDL	Dilution Factor
MCP Volatile Organics - Westborough Lab						
Methylene chloride	ND		ug/l	2.0	--	1
1,1-Dichloroethane	ND		ug/l	1.0	--	1
Chloroform	ND		ug/l	1.0	--	1
Carbon tetrachloride	ND		ug/l	1.0	--	1
1,2-Dichloropropane	ND		ug/l	1.0	--	1
Dibromochloromethane	ND		ug/l	1.0	--	1
1,1,2-Trichloroethane	ND		ug/l	1.0	--	1
Tetrachloroethene	ND		ug/l	1.0	--	1
Chlorobenzene	ND		ug/l	1.0	--	1
Trichlorofluoromethane	ND		ug/l	2.0	--	1
1,2-Dichloroethane	ND		ug/l	1.0	--	1
1,1,1-Trichloroethane	ND		ug/l	1.0	--	1
Bromodichloromethane	ND		ug/l	1.0	--	1
trans-1,3-Dichloropropene	ND		ug/l	0.50	--	1
cis-1,3-Dichloropropene	ND		ug/l	0.50	--	1
1,1-Dichloropropene	ND		ug/l	2.0	--	1
Bromoform	ND		ug/l	2.0	--	1
1,1,2,2-Tetrachloroethane	ND		ug/l	1.0	--	1
Benzene	ND		ug/l	0.50	--	1
Toluene	2.9		ug/l	1.0	--	1
Ethylbenzene	ND		ug/l	1.0	--	1
Chloromethane	ND		ug/l	2.0	--	1
Bromomethane	ND		ug/l	2.0	--	1
Vinyl chloride	ND		ug/l	1.0	--	1
Chloroethane	ND		ug/l	2.0	--	1
1,1-Dichloroethene	ND		ug/l	1.0	--	1
trans-1,2-Dichloroethene	ND		ug/l	1.0	--	1
Trichloroethene	1.2		ug/l	1.0	--	1
1,2-Dichlorobenzene	ND		ug/l	1.0	--	1
1,3-Dichlorobenzene	1.2		ug/l	1.0	--	1
1,4-Dichlorobenzene	4.8		ug/l	1.0	--	1

Project Name: NBHS IRA PSWS **Lab Number:** L1403530

Project Number: 115058 **Report Date:** 02/25/14

SAMPLE RESULTS

Lab ID: L1403530-04 Date Collected: 02/14/14 09:55

Client ID: MW-27R Date Received: 02/14/14

Sample Location: NEW BEDFORD, MA Field Prep: Not Specified

Parameter	Result	Qualifier	Units	RL	MDL	Dilution Factor
MCP Volatile Organics - Westborough Lab						
Methyl tert butyl ether	ND		ug/l	2.0	--	1
p/m-Xylene	ND		ug/l	2.0	--	1
o-Xylene	ND		ug/l	1.0	--	1
cis-1,2-Dichloroethene	1.8		ug/l	1.0	--	1
Dibromomethane	ND		ug/l	2.0	--	1
1,2,3-Trichloropropane	ND		ug/l	2.0	--	1
Styrene	ND		ug/l	1.0	--	1
Dichlorodifluoromethane	ND		ug/l	2.0	--	1
Acetone	ND		ug/l	5.0	--	1
Carbon disulfide	ND		ug/l	2.0	--	1
2-Butanone	ND		ug/l	5.0	--	1
4-Methyl-2-pentanone	ND		ug/l	5.0	--	1
2-Hexanone	ND		ug/l	5.0	--	1
Bromochloromethane	ND		ug/l	2.0	--	1
Tetrahydrofuran	ND		ug/l	2.0	--	1
2,2-Dichloropropane	ND		ug/l	2.0	--	1
1,2-Dibromoethane	ND		ug/l	2.0	--	1
1,3-Dichloropropane	ND		ug/l	2.0	--	1
1,1,1,2-Tetrachloroethane	ND		ug/l	1.0	--	1
Bromobenzene	ND		ug/l	2.0	--	1
n-Butylbenzene	ND		ug/l	2.0	--	1
sec-Butylbenzene	ND		ug/l	2.0	--	1
tert-Butylbenzene	ND		ug/l	2.0	--	1
o-Chlorotoluene	ND		ug/l	2.0	--	1
p-Chlorotoluene	ND		ug/l	2.0	--	1
1,2-Dibromo-3-chloropropane	ND		ug/l	2.0	--	1
Hexachlorobutadiene	ND		ug/l	0.60	--	1
Isopropylbenzene	ND		ug/l	2.0	--	1
p-Isopropyltoluene	ND		ug/l	2.0	--	1
Naphthalene	ND		ug/l	2.0	--	1
n-Propylbenzene	ND		ug/l	2.0	--	1
1,2,3-Trichlorobenzene	ND		ug/l	2.0	--	1
1,2,4-Trichlorobenzene	2.9		ug/l	2.0	--	1
1,3,5-Trimethylbenzene	ND		ug/l	2.0	--	1
1,2,4-Trimethylbenzene	ND		ug/l	2.0	--	1
Ethyl ether	ND		ug/l	2.0	--	1
Isopropyl Ether	ND		ug/l	2.0	--	1
Ethyl-Tert-Butyl-Ether	ND		ug/l	2.0	--	1
Tertiary-Amyl Methyl Ether	ND		ug/l	2.0	--	1

Project Name: NBHS IRA PSWS **Lab Number:** L1403530

Project Number: 115058 **Report Date:** 02/25/14

SAMPLE RESULTS

Lab ID:	L1403530-04	Date Collected:	02/14/14 09:55
Client ID:	MW-27R	Date Received:	02/14/14
Sample Location:	NEW BEDFORD, MA	Field Prep:	Not Specified

Parameter	Result	Qualifier	Units	RL	MDL	Dilution Factor
MCP Volatile Organics - Westborough Lab						
1,4-Dioxane	ND		ug/l	250	--	1

Surrogate	% Recovery	Qualifier	Acceptance Criteria
1,2-Dichloroethane-d4	102		70-130
Toluene-d8	91		70-130
4-Bromofluorobenzene	94		70-130
Dibromofluoromethane	116		70-130

Project Name: NBHS IRA PSWS **Lab Number:** L1403530

Project Number: 115058 **Report Date:** 02/25/14

SAMPLE RESULTS

Lab ID:	L1403530-07	Date Collected:	02/14/14 10:50
Client ID:	MW-42R	Date Received:	02/14/14
Sample Location:	NEW BEDFORD, MA	Field Prep:	Not Specified
Matrix:	Water		
Analytical Method:	97,8260C		
Analytical Date:	02/17/14 13:01		
Analyst:	MM		

Parameter	Result	Qualifier	Units	RL	MDL	Dilution Factor
MCP Volatile Organics - Westborough Lab						
Methylene chloride	ND		ug/l	2.0	--	1
1,1-Dichloroethane	ND		ug/l	1.0	--	1
Chloroform	ND		ug/l	1.0	--	1
Carbon tetrachloride	ND		ug/l	1.0	--	1
1,2-Dichloropropane	ND		ug/l	1.0	--	1
Dibromochloromethane	ND		ug/l	1.0	--	1
1,1,2-Trichloroethane	ND		ug/l	1.0	--	1
Tetrachloroethene	ND		ug/l	1.0	--	1
Chlorobenzene	ND		ug/l	1.0	--	1
Trichlorofluoromethane	ND		ug/l	2.0	--	1
1,2-Dichloroethane	ND		ug/l	1.0	--	1
1,1,1-Trichloroethane	ND		ug/l	1.0	--	1
Bromodichloromethane	ND		ug/l	1.0	--	1
trans-1,3-Dichloropropene	ND		ug/l	0.50	--	1
cis-1,3-Dichloropropene	ND		ug/l	0.50	--	1
1,1-Dichloropropene	ND		ug/l	2.0	--	1
Bromoform	ND		ug/l	2.0	--	1
1,1,2,2-Tetrachloroethane	ND		ug/l	1.0	--	1
Benzene	ND		ug/l	0.50	--	1
Toluene	ND		ug/l	1.0	--	1
Ethylbenzene	ND		ug/l	1.0	--	1
Chloromethane	ND		ug/l	2.0	--	1
Bromomethane	ND		ug/l	2.0	--	1
Vinyl chloride	8.2		ug/l	1.0	--	1
Chloroethane	ND		ug/l	2.0	--	1
1,1-Dichloroethene	ND		ug/l	1.0	--	1
trans-1,2-Dichloroethene	2.9		ug/l	1.0	--	1
Trichloroethene	14		ug/l	1.0	--	1
1,2-Dichlorobenzene	ND		ug/l	1.0	--	1
1,3-Dichlorobenzene	ND		ug/l	1.0	--	1
1,4-Dichlorobenzene	ND		ug/l	1.0	--	1

Project Name: NBHS IRA PSWS **Lab Number:** L1403530

Project Number: 115058 **Report Date:** 02/25/14

SAMPLE RESULTS

Lab ID: L1403530-07 Date Collected: 02/14/14 10:50

Client ID: MW-42R Date Received: 02/14/14

Sample Location: NEW BEDFORD, MA Field Prep: Not Specified

Parameter	Result	Qualifier	Units	RL	MDL	Dilution Factor
MCP Volatile Organics - Westborough Lab						
Methyl tert butyl ether	ND		ug/l	2.0	--	1
p/m-Xylene	ND		ug/l	2.0	--	1
o-Xylene	ND		ug/l	1.0	--	1
cis-1,2-Dichloroethene	5.6		ug/l	1.0	--	1
Dibromomethane	ND		ug/l	2.0	--	1
1,2,3-Trichloropropane	ND		ug/l	2.0	--	1
Styrene	ND		ug/l	1.0	--	1
Dichlorodifluoromethane	ND		ug/l	2.0	--	1
Acetone	ND		ug/l	5.0	--	1
Carbon disulfide	ND		ug/l	2.0	--	1
2-Butanone	ND		ug/l	5.0	--	1
4-Methyl-2-pentanone	ND		ug/l	5.0	--	1
2-Hexanone	ND		ug/l	5.0	--	1
Bromochloromethane	ND		ug/l	2.0	--	1
Tetrahydrofuran	ND		ug/l	2.0	--	1
2,2-Dichloropropane	ND		ug/l	2.0	--	1
1,2-Dibromoethane	ND		ug/l	2.0	--	1
1,3-Dichloropropane	ND		ug/l	2.0	--	1
1,1,1,2-Tetrachloroethane	ND		ug/l	1.0	--	1
Bromobenzene	ND		ug/l	2.0	--	1
n-Butylbenzene	ND		ug/l	2.0	--	1
sec-Butylbenzene	ND		ug/l	2.0	--	1
tert-Butylbenzene	ND		ug/l	2.0	--	1
o-Chlorotoluene	ND		ug/l	2.0	--	1
p-Chlorotoluene	ND		ug/l	2.0	--	1
1,2-Dibromo-3-chloropropane	ND		ug/l	2.0	--	1
Hexachlorobutadiene	ND		ug/l	0.60	--	1
Isopropylbenzene	ND		ug/l	2.0	--	1
p-Isopropyltoluene	ND		ug/l	2.0	--	1
Naphthalene	ND		ug/l	2.0	--	1
n-Propylbenzene	ND		ug/l	2.0	--	1
1,2,3-Trichlorobenzene	ND		ug/l	2.0	--	1
1,2,4-Trichlorobenzene	ND		ug/l	2.0	--	1
1,3,5-Trimethylbenzene	ND		ug/l	2.0	--	1
1,2,4-Trimethylbenzene	ND		ug/l	2.0	--	1
Ethyl ether	ND		ug/l	2.0	--	1
Isopropyl Ether	ND		ug/l	2.0	--	1
Ethyl-Tert-Butyl-Ether	ND		ug/l	2.0	--	1
Tertiary-Amyl Methyl Ether	ND		ug/l	2.0	--	1

Project Name: NBHS IRA PSWS **Lab Number:** L1403530

Project Number: 115058 **Report Date:** 02/25/14

SAMPLE RESULTS

Lab ID:	L1403530-07	Date Collected:	02/14/14 10:50
Client ID:	MW-42R	Date Received:	02/14/14
Sample Location:	NEW BEDFORD, MA	Field Prep:	Not Specified

Parameter	Result	Qualifier	Units	RL	MDL	Dilution Factor
MCP Volatile Organics - Westborough Lab						
1,4-Dioxane	ND		ug/l	250	--	1

Surrogate	% Recovery	Qualifier	Acceptance Criteria
1,2-Dichloroethane-d4	107		70-130
Toluene-d8	92		70-130
4-Bromofluorobenzene	96		70-130
Dibromofluoromethane	119		70-130

Project Name: NBHS IRA PSWS **Lab Number:** L1403530

Project Number: 115058 **Report Date:** 02/25/14

SAMPLE RESULTS

Lab ID:	L1403530-10	Date Collected:	02/14/14 00:00
Client ID:	TRIP BLANK	Date Received:	02/14/14
Sample Location:	NEW BEDFORD, MA	Field Prep:	Not Specified
Matrix:	Water		
Analytical Method:	97,8260C		
Analytical Date:	02/17/14 08:09		
Analyst:	MM		

Parameter	Result	Qualifier	Units	RL	MDL	Dilution Factor
MCP Volatile Organics - Westborough Lab						
Methylene chloride	ND		ug/l	2.0	--	1
1,1-Dichloroethane	ND		ug/l	1.0	--	1
Chloroform	ND		ug/l	1.0	--	1
Carbon tetrachloride	ND		ug/l	1.0	--	1
1,2-Dichloropropane	ND		ug/l	1.0	--	1
Dibromochloromethane	ND		ug/l	1.0	--	1
1,1,2-Trichloroethane	ND		ug/l	1.0	--	1
Tetrachloroethene	ND		ug/l	1.0	--	1
Chlorobenzene	ND		ug/l	1.0	--	1
Trichlorofluoromethane	ND		ug/l	2.0	--	1
1,2-Dichloroethane	ND		ug/l	1.0	--	1
1,1,1-Trichloroethane	ND		ug/l	1.0	--	1
Bromodichloromethane	ND		ug/l	1.0	--	1
trans-1,3-Dichloropropene	ND		ug/l	0.50	--	1
cis-1,3-Dichloropropene	ND		ug/l	0.50	--	1
1,1-Dichloropropene	ND		ug/l	2.0	--	1
Bromoform	ND		ug/l	2.0	--	1
1,1,2,2-Tetrachloroethane	ND		ug/l	1.0	--	1
Benzene	ND		ug/l	0.50	--	1
Toluene	ND		ug/l	1.0	--	1
Ethylbenzene	ND		ug/l	1.0	--	1
Chloromethane	ND		ug/l	2.0	--	1
Bromomethane	ND		ug/l	2.0	--	1
Vinyl chloride	ND		ug/l	1.0	--	1
Chloroethane	ND		ug/l	2.0	--	1
1,1-Dichloroethene	ND		ug/l	1.0	--	1
trans-1,2-Dichloroethene	ND		ug/l	1.0	--	1
Trichloroethene	ND		ug/l	1.0	--	1
1,2-Dichlorobenzene	ND		ug/l	1.0	--	1
1,3-Dichlorobenzene	ND		ug/l	1.0	--	1
1,4-Dichlorobenzene	ND		ug/l	1.0	--	1

Project Name: NBHS IRA PSWS **Lab Number:** L1403530

Project Number: 115058 **Report Date:** 02/25/14

SAMPLE RESULTS

Lab ID: L1403530-10 Date Collected: 02/14/14 00:00

Client ID: TRIP BLANK Date Received: 02/14/14

Sample Location: NEW BEDFORD, MA Field Prep: Not Specified

Parameter	Result	Qualifier	Units	RL	MDL	Dilution Factor
MCP Volatile Organics - Westborough Lab						
Methyl tert butyl ether	ND		ug/l	2.0	--	1
p/m-Xylene	ND		ug/l	2.0	--	1
o-Xylene	ND		ug/l	1.0	--	1
cis-1,2-Dichloroethene	ND		ug/l	1.0	--	1
Dibromomethane	ND		ug/l	2.0	--	1
1,2,3-Trichloropropane	ND		ug/l	2.0	--	1
Styrene	ND		ug/l	1.0	--	1
Dichlorodifluoromethane	ND		ug/l	2.0	--	1
Acetone	ND		ug/l	5.0	--	1
Carbon disulfide	ND		ug/l	2.0	--	1
2-Butanone	ND		ug/l	5.0	--	1
4-Methyl-2-pentanone	ND		ug/l	5.0	--	1
2-Hexanone	ND		ug/l	5.0	--	1
Bromochloromethane	ND		ug/l	2.0	--	1
Tetrahydrofuran	ND		ug/l	2.0	--	1
2,2-Dichloropropane	ND		ug/l	2.0	--	1
1,2-Dibromoethane	ND		ug/l	2.0	--	1
1,3-Dichloropropane	ND		ug/l	2.0	--	1
1,1,1,2-Tetrachloroethane	ND		ug/l	1.0	--	1
Bromobenzene	ND		ug/l	2.0	--	1
n-Butylbenzene	ND		ug/l	2.0	--	1
sec-Butylbenzene	ND		ug/l	2.0	--	1
tert-Butylbenzene	ND		ug/l	2.0	--	1
o-Chlorotoluene	ND		ug/l	2.0	--	1
p-Chlorotoluene	ND		ug/l	2.0	--	1
1,2-Dibromo-3-chloropropane	ND		ug/l	2.0	--	1
Hexachlorobutadiene	ND		ug/l	0.60	--	1
Isopropylbenzene	ND		ug/l	2.0	--	1
p-Isopropyltoluene	ND		ug/l	2.0	--	1
Naphthalene	ND		ug/l	2.0	--	1
n-Propylbenzene	ND		ug/l	2.0	--	1
1,2,3-Trichlorobenzene	ND		ug/l	2.0	--	1
1,2,4-Trichlorobenzene	ND		ug/l	2.0	--	1
1,3,5-Trimethylbenzene	ND		ug/l	2.0	--	1
1,2,4-Trimethylbenzene	ND		ug/l	2.0	--	1
Ethyl ether	ND		ug/l	2.0	--	1
Isopropyl Ether	ND		ug/l	2.0	--	1
Ethyl-Tert-Butyl-Ether	ND		ug/l	2.0	--	1
Tertiary-Amyl Methyl Ether	ND		ug/l	2.0	--	1

Project Name: NBHS IRA PSWS **Lab Number:** L1403530

Project Number: 115058 **Report Date:** 02/25/14

SAMPLE RESULTS

Lab ID:	L1403530-10	Date Collected:	02/14/14 00:00
Client ID:	TRIP BLANK	Date Received:	02/14/14
Sample Location:	NEW BEDFORD, MA	Field Prep:	Not Specified

Parameter	Result	Qualifier	Units	RL	MDL	Dilution Factor
MCP Volatile Organics - Westborough Lab						
1,4-Dioxane	ND		ug/l	250	--	1

Surrogate	% Recovery	Qualifier	Acceptance Criteria
1,2-Dichloroethane-d4	104		70-130
Toluene-d8	90		70-130
4-Bromofluorobenzene	95		70-130
Dibromofluoromethane	121		70-130

Project Name: NBHS IRA PSWS **Lab Number:** L1403530

Project Number: 115058 **Report Date:** 02/25/14

Method Blank Analysis
Batch Quality Control

Analytical Method: 97,8260C
Analytical Date: 02/17/14 07:04
Analyst: MM

Parameter	Result	Qualifier	Units	RL	MDL
MCP Volatile Organics - Westborough Lab for sample(s): 01,03-04,07,10 Batch: WG670768-3					
Methylene chloride	ND		ug/l	2.0	--
1,1-Dichloroethane	ND		ug/l	1.0	--
Chloroform	ND		ug/l	1.0	--
Carbon tetrachloride	ND		ug/l	1.0	--
1,2-Dichloropropane	ND		ug/l	1.0	--
Dibromochloromethane	ND		ug/l	1.0	--
1,1,2-Trichloroethane	ND		ug/l	1.0	--
Tetrachloroethene	ND		ug/l	1.0	--
Chlorobenzene	ND		ug/l	1.0	--
Trichlorofluoromethane	ND		ug/l	2.0	--
1,2-Dichloroethane	ND		ug/l	1.0	--
1,1,1-Trichloroethane	ND		ug/l	1.0	--
Bromodichloromethane	ND		ug/l	1.0	--
trans-1,3-Dichloropropene	ND		ug/l	0.50	--
cis-1,3-Dichloropropene	ND		ug/l	0.50	--
1,1-Dichloropropene	ND		ug/l	2.0	--
Bromoform	ND		ug/l	2.0	--
1,1,2,2-Tetrachloroethane	ND		ug/l	1.0	--
Benzene	ND		ug/l	0.50	--
Toluene	ND		ug/l	1.0	--
Ethylbenzene	ND		ug/l	1.0	--
Chloromethane	ND		ug/l	2.0	--
Bromomethane	ND		ug/l	2.0	--
Vinyl chloride	ND		ug/l	1.0	--
Chloroethane	ND		ug/l	2.0	--
1,1-Dichloroethene	ND		ug/l	1.0	--
trans-1,2-Dichloroethene	ND		ug/l	1.0	--
Trichloroethene	ND		ug/l	1.0	--
1,2-Dichlorobenzene	ND		ug/l	1.0	--
1,3-Dichlorobenzene	ND		ug/l	1.0	--
1,4-Dichlorobenzene	ND		ug/l	1.0	--

Project Name: NBHS IRA PSWS **Lab Number:** L1403530

Project Number: 115058 **Report Date:** 02/25/14

Method Blank Analysis
Batch Quality Control

Analytical Method: 97,8260C
Analytical Date: 02/17/14 07:04
Analyst: MM

Parameter	Result	Qualifier	Units	RL	MDL
MCP Volatile Organics - Westborough Lab for sample(s): 01,03-04,07,10 Batch: WG670768-3					
Methyl tert butyl ether	ND		ug/l	2.0	--
p/m-Xylene	ND		ug/l	2.0	--
o-Xylene	ND		ug/l	1.0	--
cis-1,2-Dichloroethene	ND		ug/l	1.0	--
Dibromomethane	ND		ug/l	2.0	--
1,2,3-Trichloropropane	ND		ug/l	2.0	--
Styrene	ND		ug/l	1.0	--
Dichlorodifluoromethane	ND		ug/l	2.0	--
Acetone	ND		ug/l	5.0	--
Carbon disulfide	ND		ug/l	2.0	--
2-Butanone	ND		ug/l	5.0	--
4-Methyl-2-pentanone	ND		ug/l	5.0	--
2-Hexanone	ND		ug/l	5.0	--
Bromochloromethane	ND		ug/l	2.0	--
Tetrahydrofuran	ND		ug/l	2.0	--
2,2-Dichloropropane	ND		ug/l	2.0	--
1,2-Dibromoethane	ND		ug/l	2.0	--
1,3-Dichloropropane	ND		ug/l	2.0	--
1,1,1,2-Tetrachloroethane	ND		ug/l	1.0	--
Bromobenzene	ND		ug/l	2.0	--
n-Butylbenzene	ND		ug/l	2.0	--
sec-Butylbenzene	ND		ug/l	2.0	--
tert-Butylbenzene	ND		ug/l	2.0	--
o-Chlorotoluene	ND		ug/l	2.0	--
p-Chlorotoluene	ND		ug/l	2.0	--
1,2-Dibromo-3-chloropropane	ND		ug/l	2.0	--
Hexachlorobutadiene	ND		ug/l	0.60	--
Isopropylbenzene	ND		ug/l	2.0	--
p-Isopropyltoluene	ND		ug/l	2.0	--
Naphthalene	ND		ug/l	2.0	--
n-Propylbenzene	ND		ug/l	2.0	--

Project Name: NBHS IRA PSWS
Project Number: 115058

Lab Number: L1403530
Report Date: 02/25/14

Method Blank Analysis
Batch Quality Control

Analytical Method: 97,8260C
Analytical Date: 02/17/14 07:04
Analyst: MM

Parameter	Result	Qualifier	Units	RL	MDL
MCP Volatile Organics - Westborough Lab for sample(s): 01,03-04,07,10 Batch: WG670768-3					
1,2,3-Trichlorobenzene	ND		ug/l	2.0	--
1,2,4-Trichlorobenzene	ND		ug/l	2.0	--
1,3,5-Trimethylbenzene	ND		ug/l	2.0	--
1,2,4-Trimethylbenzene	ND		ug/l	2.0	--
Ethyl ether	ND		ug/l	2.0	--
Isopropyl Ether	ND		ug/l	2.0	--
Ethyl-Tert-Butyl-Ether	ND		ug/l	2.0	--
Tertiary-Amyl Methyl Ether	ND		ug/l	2.0	--
1,4-Dioxane	ND		ug/l	250	--

Surrogate	%Recovery	Qualifier	Acceptance Criteria
1,2-Dichloroethane-d4	103		70-130
Toluene-d8	90		70-130
4-Bromofluorobenzene	96		70-130
Dibromofluoromethane	118		70-130

Project Name: NBHS IRA PSWS **Lab Number:** L1403530

Project Number: 115058 **Report Date:** 02/25/14

Method Blank Analysis
Batch Quality Control

Analytical Method: 97,8260C
Analytical Date: 02/18/14 08:28
Analyst: MM

Parameter	Result	Qualifier	Units	RL	MDL
MCP Volatile Organics - Westborough Lab for sample(s): 03 Batch: WG670768-6					
cis-1,2-Dichloroethene	ND		ug/l	1.0	--

Surrogate	%Recovery	Qualifier	Acceptance Criteria
1,2-Dichloroethane-d4	98		70-130
Toluene-d8	89		70-130
4-Bromofluorobenzene	97		70-130
Dibromofluoromethane	114		70-130

Lab Control Sample Analysis
Batch Quality Control

Project Name: NBHS IRA PSWS
Project Number: 115058

Lab Number: L1403530
Report Date: 02/25/14

Parameter	LCS %Recovery	Qual	LCSD %Recovery	Qual	%Recovery Limits	RPD	Qual	RPD Limits
MCP Volatile Organics - Westborough Lab Associated sample(s): 01,03-04,07,10 Batch: WG670768-1 WG670768-2								
Methylene chloride	104		102		70-130	2		20
1,1-Dichloroethane	101		101		70-130	0		20
Chloroform	107		109		70-130	2		20
Carbon tetrachloride	106		106		70-130	0		20
1,2-Dichloropropane	96		102		70-130	6		20
Dibromochloromethane	93		98		70-130	5		20
1,1,2-Trichloroethane	91		95		70-130	4		20
Tetrachloroethene	102		104		70-130	2		20
Chlorobenzene	99		100		70-130	1		20
Trichlorofluoromethane	102		104		70-130	2		20
1,2-Dichloroethane	105		106		70-130	1		20
1,1,1-Trichloroethane	107		108		70-130	1		20
Bromodichloromethane	102		106		70-130	4		20
trans-1,3-Dichloropropene	91		95		70-130	4		20
cis-1,3-Dichloropropene	99		104		70-130	5		20
1,1-Dichloropropene	100		101		70-130	1		20
Bromoform	94		97		70-130	3		20
1,1,2,2-Tetrachloroethane	92		97		70-130	5		20
Benzene	97		100		70-130	3		20
Toluene	95		99		70-130	4		20
Ethylbenzene	98		101		70-130	3		20

Lab Control Sample Analysis
Batch Quality Control

Project Name: NBHS IRA PSWS
Project Number: 115058

Lab Number: L1403530
Report Date: 02/25/14

Parameter	LCS %Recovery	Qual	LCSD %Recovery	Qual	%Recovery Limits	RPD	Qual	RPD Limits
MCP Volatile Organics - Westborough Lab Associated sample(s): 01,03-04,07,10 Batch: WG670768-1 WG670768-2								
Chloromethane	89		87		70-130	2		20
Bromomethane	104		92		70-130	12		20
Vinyl chloride	93		88		70-130	6		20
Chloroethane	95		92		70-130	3		20
1,1-Dichloroethene	101		104		70-130	3		20
trans-1,2-Dichloroethene	102		106		70-130	4		20
Trichloroethene	104		104		70-130	0		20
1,2-Dichlorobenzene	97		100		70-130	3		20
1,3-Dichlorobenzene	98		99		70-130	1		20
1,4-Dichlorobenzene	97		97		70-130	0		20
Methyl tert butyl ether	95		100		70-130	5		20
p/m-Xylene	99		103		70-130	4		20
o-Xylene	99		101		70-130	2		20
cis-1,2-Dichloroethene	102		106		70-130	4		20
Dibromomethane	103		107		70-130	4		20
1,2,3-Trichloropropane	87		94		70-130	8		20
Styrene	99		102		70-130	3		20
Dichlorodifluoromethane	79		80		70-130	1		20
Acetone	86		81		70-130	6		20
Carbon disulfide	95		97		70-130	2		20
2-Butanone	76		78		70-130	3		20

Lab Control Sample Analysis
Batch Quality Control

Project Name: NBHS IRA PSWS
Project Number: 115058

Lab Number: L1403530
Report Date: 02/25/14

Parameter	LCS %Recovery	Qual	LCSD %Recovery	Qual	%Recovery Limits	RPD	Qual	RPD Limits
MCP Volatile Organics - Westborough Lab Associated sample(s): 01,03-04,07,10 Batch: WG670768-1 WG670768-2								
4-Methyl-2-pentanone	103		109		70-130	6		20
2-Hexanone	93		92		70-130	1		20
Bromochloromethane	110		111		70-130	1		20
Tetrahydrofuran	93		102		70-130	9		20
2,2-Dichloropropane	106		105		70-130	1		20
1,2-Dibromoethane	90		97		70-130	7		20
1,3-Dichloropropane	91		95		70-130	4		20
1,1,1,2-Tetrachloroethane	98		102		70-130	4		20
Bromobenzene	100		98		70-130	2		20
n-Butylbenzene	100		97		70-130	3		20
sec-Butylbenzene	99		97		70-130	2		20
tert-Butylbenzene	100		97		70-130	3		20
o-Chlorotoluene	97		97		70-130	0		20
p-Chlorotoluene	96		97		70-130	1		20
1,2-Dibromo-3-chloropropane	91		97		70-130	6		20
Hexachlorobutadiene	108		102		70-130	6		20
Isopropylbenzene	97		96		70-130	1		20
p-Isopropyltoluene	100		99		70-130	1		20
Naphthalene	93		96		70-130	3		20
n-Propylbenzene	97		96		70-130	1		20
1,2,3-Trichlorobenzene	96		98		70-130	2		20

Lab Control Sample Analysis
Batch Quality Control

Project Name: NBHS IRA PSWS
Project Number: 115058

Lab Number: L1403530
Report Date: 02/25/14

Parameter	LCS %Recovery	Qual	LCSD %Recovery	Qual	%Recovery Limits	RPD	Qual	RPD Limits
MCP Volatile Organics - Westborough Lab Associated sample(s): 01,03-04,07,10 Batch: WG670768-1 WG670768-2								
1,2,4-Trichlorobenzene	96		98		70-130	2		20
1,3,5-Trimethylbenzene	99		95		70-130	4		20
1,2,4-Trimethylbenzene	96		96		70-130	0		20
Ethyl ether	98		104		70-130	6		20
Isopropyl Ether	93		98		70-130	5		20
Ethyl-Tert-Butyl-Ether	95		97		70-130	2		20
Tertiary-Amyl Methyl Ether	99		102		70-130	3		20
1,4-Dioxane	100		112		70-130	11		20

Surrogate	LCS %Recovery	Qual	LCSD %Recovery	Qual	Acceptance Criteria
1,2-Dichloroethane-d4	99		101		70-130
Toluene-d8	93		97		70-130
4-Bromofluorobenzene	96		97		70-130
Dibromofluoromethane	104		107		70-130

Lab Control Sample Analysis
Batch Quality Control

Project Name: NBHS IRA PSWS
Project Number: 115058
Lab Number: L1403530
Report Date: 02/25/14

Parameter	LCS %Recovery	Qual	LCSD %Recovery	Qual	%Recovery Limits	RPD	Qual	RPD Limits
MCP Volatile Organics - Westborough Lab Associated sample(s): 03 Batch: WG670768-4 WG670768-5								
cis-1,2-Dichloroethene	103		104		70-130	1		20

Surrogate	LCS %Recovery	Qual	LCSD %Recovery	Qual	Acceptance Criteria
1,2-Dichloroethane-d4	104		99		70-130
Toluene-d8	93		95		70-130
4-Bromofluorobenzene	92		99		70-130
Dibromofluoromethane	100		105		70-130

PETROLEUM HYDROCARBONS

Project Name: NBHS IRA PSWS **Lab Number:** L1403530

Project Number: 115058 **Report Date:** 02/25/14

SAMPLE RESULTS

Lab ID:	L1403530-01	Date Collected:	02/14/14 08:00
Client ID:	INFLUENT	Date Received:	02/14/14
Sample Location:	NEW BEDFORD, MA	Field Prep:	Not Specified
Matrix:	Water	Extraction Method:	EPA 3510C
Analytical Method:	1,8015C(M)	Extraction Date:	02/16/14 13:42
Analytical Date:	02/18/14 10:36		
Analyst:	AR		

Parameter	Result	Qualifier	Units	RL	MDL	Dilution Factor
Petroleum Hydrocarbon Quantitation - Westborough Lab						
TPH	245		ug/l	200	--	1

Surrogate	% Recovery	Qualifier	Acceptance Criteria
o-Terphenyl	105		40-140

Project Name: NBHS IRA PSWS **Lab Number:** L1403530

Project Number: 115058 **Report Date:** 02/25/14

SAMPLE RESULTS

Lab ID:	L1403530-02	Date Collected:	02/14/14 08:00
Client ID:	INFLUENT (LAB FILTERED 0.2)	Date Received:	02/14/14
Sample Location:	NEW BEDFORD, MA	Field Prep:	Not Specified
Matrix:	Water	Extraction Method:	EPA 3510C
Analytical Method:	1,8015C(M)	Extraction Date:	02/16/14 13:42
Analytical Date:	02/18/14 11:08		
Analyst:	AR		

Parameter	Result	Qualifier	Units	RL	MDL	Dilution Factor
Petroleum Hydrocarbon Quantitation - Westborough Lab						
TPH	ND		ug/l	200	--	1

Surrogate	% Recovery	Qualifier	Acceptance Criteria
o-Terphenyl	96		40-140

Project Name: NBHS IRA PSWS
Project Number: 115058

Lab Number: L1403530
Report Date: 02/25/14

Method Blank Analysis
Batch Quality Control

Analytical Method: 1,8015C(M)
Analytical Date: 02/18/14 09:00
Analyst: AR

Extraction Method: EPA 3510C
Extraction Date: 02/16/14 13:42

Parameter	Result	Qualifier	Units	RL	MDL
Petroleum Hydrocarbon Quantitation - Westborough Lab for sample(s): 01-02 Batch: WG670675-1					
TPH	ND		ug/l	200	--

Surrogate	%Recovery	Qualifier	Acceptance Criteria
o-Terphenyl	103		40-140

Lab Control Sample Analysis
Batch Quality Control

Project Name: NBHS IRA PSWS
Project Number: 115058

Lab Number: L1403530
Report Date: 02/25/14

Parameter	LCS %Recovery	Qual	LCSD %Recovery	Qual	%Recovery Limits	RPD	Qual	RPD Limits
Petroleum Hydrocarbon Quantitation - Westborough Lab Associated sample(s): 01-02 Batch: WG670675-2								
TPH	138		-		40-140	-		40

Surrogate	LCS %Recovery	Qual	LCSD %Recovery	Qual	Acceptance Criteria
o-Terphenyl	111				40-140

Lab Duplicate Analysis
Batch Quality Control

Project Name: NBHS IRA PSWS
Project Number: 115058

Lab Number: L1403530
Report Date: 02/25/14

Parameter	Native Sample	Duplicate Sample	Units	RPD	Qual	RPD Limits
Petroleum Hydrocarbon Quantitation - Westborough Lab Associated sample(s): 01-02 QC Batch ID: WG670675-3 QC Sample: L1403530-01 Client ID: INFLUENT						
TPH	245	230	ug/l	6		40

Surrogate	%Recovery	Qualifier	%Recovery	Qualifier	Acceptance Criteria
o-Terphenyl	105		100		40-140

PCBS

Project Name: NBHS IRA PSWS **Lab Number:** L1403530

Project Number: 115058 **Report Date:** 02/25/14

SAMPLE RESULTS

Lab ID:	L1403530-01	D	Date Collected:	02/14/14 08:00
Client ID:	INFLUENT		Date Received:	02/14/14
Sample Location:	NEW BEDFORD, MA		Field Prep:	Not Specified
Matrix:	Water		Extraction Method:	EPA 3510C
Analytical Method:	97,8082		Extraction Date:	02/18/14 04:57
Analytical Date:	02/24/14 20:46		Cleanup Method1:	EPA 3665A
Analyst:	KB		Cleanup Date1:	02/18/14
			Cleanup Method2:	EPA 3660B
			Cleanup Date2:	02/18/14

Parameter	Result	Qualifier	Units	RL	MDL	Dilution Factor	Column
MCP Polychlorinated Biphenyls - Westborough Lab							
Aroclor 1016	ND		ug/l	2.50	--	10	A
Aroclor 1221	ND		ug/l	2.50	--	10	A
Aroclor 1232	ND		ug/l	2.50	--	10	A
Aroclor 1242	ND		ug/l	2.50	--	10	A
Aroclor 1248	ND		ug/l	2.50	--	10	A
Aroclor 1254	57.5		ug/l	2.50	--	10	B
Aroclor 1260	ND		ug/l	2.50	--	10	A
Aroclor 1262	ND		ug/l	2.50	--	10	A
Aroclor 1268	ND		ug/l	2.50	--	10	A

Surrogate	% Recovery	Qualifier	Acceptance Criteria	Column
2,4,5,6-Tetrachloro-m-xylene	**0**	Q	30-150	A
Decachlorobiphenyl	**0**	Q	30-150	A
2,4,5,6-Tetrachloro-m-xylene	**0**	Q	30-150	B
Decachlorobiphenyl	**0**	Q	30-150	B

Project Name: NBHS IRA PSWS **Lab Number:** L1403530

Project Number: 115058 **Report Date:** 02/25/14

SAMPLE RESULTS

Lab ID:	L1403530-02	Date Collected:	02/14/14 08:00
Client ID:	INFLUENT (LAB FILTERED 0.2)	Date Received:	02/14/14
Sample Location:	NEW BEDFORD, MA	Field Prep:	Not Specified
Matrix:	Water	Extraction Method:	EPA 3510C
Analytical Method:	97,8082	Extraction Date:	02/18/14 04:57
Analytical Date:	02/18/14 14:57	Cleanup Method1:	EPA 3665A
Analyst:	KB	Cleanup Date1:	02/18/14
		Cleanup Method2:	EPA 3660B
		Cleanup Date2:	02/18/14

Parameter	Result	Qualifier	Units	RL	MDL	Dilution Factor	Column
MCP Polychlorinated Biphenyls - Westborough Lab							
Aroclor 1016	ND		ug/l	0.250	--	1	A
Aroclor 1221	ND		ug/l	0.250	--	1	A
Aroclor 1232	ND		ug/l	0.250	--	1	A
Aroclor 1242	ND		ug/l	0.250	--	1	A
Aroclor 1248	ND		ug/l	0.250	--	1	A
Aroclor 1254	ND		ug/l	0.250	--	1	A
Aroclor 1260	ND		ug/l	0.250	--	1	A
Aroclor 1262	ND		ug/l	0.250	--	1	A
Aroclor 1268	ND		ug/l	0.250	--	1	A

Surrogate	% Recovery	Qualifier	Acceptance Criteria	Column
2,4,5,6-Tetrachloro-m-xylene	69		30-150	A
Decachlorobiphenyl	61		30-150	A
2,4,5,6-Tetrachloro-m-xylene	71		30-150	B
Decachlorobiphenyl	55		30-150	B

Project Name: NBHS IRA PSWS **Lab Number:** L1403530

Project Number: 115058 **Report Date:** 02/25/14

SAMPLE RESULTS

Lab ID:	L1403530-03	Date Collected:	02/14/14 08:10
Client ID:	EFFLUENT	Date Received:	02/14/14
Sample Location:	NEW BEDFORD, MA	Field Prep:	Not Specified
Matrix:	Water	Extraction Method:	EPA 3510C
Analytical Method:	97,8082	Extraction Date:	02/18/14 04:57
Analytical Date:	02/18/14 15:10	Cleanup Method1:	EPA 3665A
Analyst:	KB	Cleanup Date1:	02/18/14
		Cleanup Method2:	EPA 3660B
		Cleanup Date2:	02/18/14

Parameter	Result	Qualifier	Units	RL	MDL	Dilution Factor	Column
MCP Polychlorinated Biphenyls - Westborough Lab							
Aroclor 1016	ND		ug/l	0.250	--	1	A
Aroclor 1221	ND		ug/l	0.250	--	1	A
Aroclor 1232	ND		ug/l	0.250	--	1	A
Aroclor 1242	ND		ug/l	0.250	--	1	A
Aroclor 1248	ND		ug/l	0.250	--	1	A
Aroclor 1254	ND		ug/l	0.250	--	1	A
Aroclor 1260	ND		ug/l	0.250	--	1	A
Aroclor 1262	ND		ug/l	0.250	--	1	A
Aroclor 1268	ND		ug/l	0.250	--	1	A

Surrogate	% Recovery	Qualifier	Acceptance Criteria	Column
2,4,5,6-Tetrachloro-m-xylene	69		30-150	A
Decachlorobiphenyl	99		30-150	A
2,4,5,6-Tetrachloro-m-xylene	70		30-150	B
Decachlorobiphenyl	85		30-150	B

Project Name: NBHS IRA PSWS **Lab Number:** L1403530

Project Number: 115058 **Report Date:** 02/25/14

SAMPLE RESULTS

Lab ID:	L1403530-04	D	Date Collected:	02/14/14 09:55
Client ID:	MW-27R		Date Received:	02/14/14
Sample Location:	NEW BEDFORD, MA		Field Prep:	Not Specified
Matrix:	Water		Extraction Method:	EPA 3510C
Analytical Method:	97,8082		Extraction Date:	02/18/14 04:57
Analytical Date:	02/24/14 20:58		Cleanup Method1:	EPA 3665A
Analyst:	KB		Cleanup Date1:	02/18/14
			Cleanup Method2:	EPA 3660B
			Cleanup Date2:	02/18/14

Parameter	Result	Qualifier	Units	RL	MDL	Dilution Factor	Column
MCP Polychlorinated Biphenyls - Westborough Lab							
Aroclor 1016	ND		ug/l	0.500	--	2	A
Aroclor 1221	ND		ug/l	0.500	--	2	A
Aroclor 1232	ND		ug/l	0.500	--	2	A
Aroclor 1242	ND		ug/l	0.500	--	2	A
Aroclor 1248	ND		ug/l	0.500	--	2	A
Aroclor 1254	6.95		ug/l	0.500	--	2	A
Aroclor 1260	ND		ug/l	0.500	--	2	A
Aroclor 1262	ND		ug/l	0.500	--	2	A
Aroclor 1268	ND		ug/l	0.500	--	2	A

Surrogate	% Recovery	Qualifier	Acceptance Criteria	Column
2,4,5,6-Tetrachloro-m-xylene	67		30-150	A
Decachlorobiphenyl	71		30-150	A
2,4,5,6-Tetrachloro-m-xylene	67		30-150	B
Decachlorobiphenyl	62		30-150	B

Project Name: NBHS IRA PSWS **Lab Number:** L1403530

Project Number: 115058 **Report Date:** 02/25/14

SAMPLE RESULTS

Lab ID:	L1403530-05	Date Collected:	02/14/14 09:55
Client ID:	MW-27R (LAB FILTERED 0.2)	Date Received:	02/14/14
Sample Location:	NEW BEDFORD, MA	Field Prep:	Not Specified
Matrix:	Water	Extraction Method:	EPA 3510C
Analytical Method:	97,8082	Extraction Date:	02/18/14 04:57
Analytical Date:	02/18/14 15:37	Cleanup Method1:	EPA 3665A
Analyst:	KB	Cleanup Date1:	02/18/14
		Cleanup Method2:	EPA 3660B
		Cleanup Date2:	02/18/14

Parameter	Result	Qualifier	Units	RL	MDL	Dilution Factor	Column
MCP Polychlorinated Biphenyls - Westborough Lab							
Aroclor 1016	ND		ug/l	0.250	--	1	A
Aroclor 1221	ND		ug/l	0.250	--	1	A
Aroclor 1232	ND		ug/l	0.250	--	1	A
Aroclor 1242	ND		ug/l	0.250	--	1	A
Aroclor 1248	ND		ug/l	0.250	--	1	A
Aroclor 1254	ND		ug/l	0.250	--	1	A
Aroclor 1260	ND		ug/l	0.250	--	1	A
Aroclor 1262	ND		ug/l	0.250	--	1	A
Aroclor 1268	ND		ug/l	0.250	--	1	A

Surrogate	% Recovery	Qualifier	Acceptance Criteria	Column
2,4,5,6-Tetrachloro-m-xylene	68		30-150	A
Decachlorobiphenyl	73		30-150	A
2,4,5,6-Tetrachloro-m-xylene	71		30-150	B
Decachlorobiphenyl	63		30-150	B

Project Name: NBHS IRA PSWS **Lab Number:** L1403530

Project Number: 115058 **Report Date:** 02/25/14

SAMPLE RESULTS

Lab ID:	L1403530-06	Date Collected:	02/14/14 09:55
Client ID:	MW-27R (FIELD FILTERED 0.45)	Date Received:	02/14/14
Sample Location:	NEW BEDFORD, MA	Field Prep:	Field Filtered
Matrix:	Water	Extraction Method:	EPA 3510C
Analytical Method:	97,8082	Extraction Date:	02/18/14 04:57
Analytical Date:	02/18/14 15:50	Cleanup Method1:	EPA 3665A
Analyst:	KB	Cleanup Date1:	02/18/14
		Cleanup Method2:	EPA 3660B
		Cleanup Date2:	02/18/14

Parameter	Result	Qualifier	Units	RL	MDL	Dilution Factor	Column
MCP Polychlorinated Biphenyls - Westborough Lab							
Aroclor 1016	ND		ug/l	0.250	--	1	A
Aroclor 1221	ND		ug/l	0.250	--	1	A
Aroclor 1232	ND		ug/l	0.250	--	1	A
Aroclor 1242	ND		ug/l	0.250	--	1	A
Aroclor 1248	ND		ug/l	0.250	--	1	A
Aroclor 1254	ND		ug/l	0.250	--	1	A
Aroclor 1260	ND		ug/l	0.250	--	1	A
Aroclor 1262	ND		ug/l	0.250	--	1	A
Aroclor 1268	ND		ug/l	0.250	--	1	A

Surrogate	% Recovery	Qualifier	Acceptance Criteria	Column
2,4,5,6-Tetrachloro-m-xylene	72		30-150	A
Decachlorobiphenyl	96		30-150	A
2,4,5,6-Tetrachloro-m-xylene	74		30-150	B
Decachlorobiphenyl	83		30-150	B

Project Name: NBHS IRA PSWS **Lab Number:** L1403530

Project Number: 115058 **Report Date:** 02/25/14

SAMPLE RESULTS

Lab ID:	L1403530-07	D	Date Collected:	02/14/14 10:50
Client ID:	MW-42R		Date Received:	02/14/14
Sample Location:	NEW BEDFORD, MA		Field Prep:	Not Specified
Matrix:	Water		Extraction Method:	EPA 3510C
Analytical Method:	97,8082		Extraction Date:	02/18/14 04:57
Analytical Date:	02/24/14 21:10		Cleanup Method1:	EPA 3665A
Analyst:	KB		Cleanup Date1:	02/18/14
			Cleanup Method2:	EPA 3660B
			Cleanup Date2:	02/18/14

Parameter	Result	Qualifier	Units	RL	MDL	Dilution Factor	Column
MCP Polychlorinated Biphenyls - Westborough Lab							
Aroclor 1016	ND		ug/l	0.500	--	2	A
Aroclor 1221	ND		ug/l	0.500	--	2	A
Aroclor 1232	ND		ug/l	0.500	--	2	A
Aroclor 1242	ND		ug/l	0.500	--	2	A
Aroclor 1248	ND		ug/l	0.500	--	2	A
Aroclor 1254	6.66		ug/l	0.500	--	2	A
Aroclor 1260	ND		ug/l	0.500	--	2	A
Aroclor 1262	ND		ug/l	0.500	--	2	A
Aroclor 1268	ND		ug/l	0.500	--	2	A

Surrogate	% Recovery	Qualifier	Acceptance Criteria	Column
2,4,5,6-Tetrachloro-m-xylene	74		30-150	A
Decachlorobiphenyl	89		30-150	A
2,4,5,6-Tetrachloro-m-xylene	79		30-150	B
Decachlorobiphenyl	80		30-150	B

Project Name: NBHS IRA PSWS **Lab Number:** L1403530

Project Number: 115058 **Report Date:** 02/25/14

SAMPLE RESULTS

Lab ID:	L1403530-08	Date Collected:	02/14/14 10:50
Client ID:	MW-42R (LAB FILTERED 0.2)	Date Received:	02/14/14
Sample Location:	NEW BEDFORD, MA	Field Prep:	Not Specified
Matrix:	Water	Extraction Method:	EPA 3510C
Analytical Method:	97,8082	Extraction Date:	02/18/14 04:57
Analytical Date:	02/18/14 16:16	Cleanup Method1:	EPA 3665A
Analyst:	KB	Cleanup Date1:	02/18/14
		Cleanup Method2:	EPA 3660B
		Cleanup Date2:	02/18/14

Parameter	Result	Qualifier	Units	RL	MDL	Dilution Factor	Column
MCP Polychlorinated Biphenyls - Westborough Lab							
Aroclor 1016	ND		ug/l	0.250	--	1	A
Aroclor 1221	ND		ug/l	0.250	--	1	A
Aroclor 1232	ND		ug/l	0.250	--	1	A
Aroclor 1242	ND		ug/l	0.250	--	1	A
Aroclor 1248	ND		ug/l	0.250	--	1	A
Aroclor 1254	ND		ug/l	0.250	--	1	A
Aroclor 1260	ND		ug/l	0.250	--	1	A
Aroclor 1262	ND		ug/l	0.250	--	1	A
Aroclor 1268	ND		ug/l	0.250	--	1	A

Surrogate	% Recovery	Qualifier	Acceptance Criteria	Column
2,4,5,6-Tetrachloro-m-xylene	69		30-150	A
Decachlorobiphenyl	74		30-150	A
2,4,5,6-Tetrachloro-m-xylene	71		30-150	B
Decachlorobiphenyl	63		30-150	B

Project Name: NBHS IRA PSWS **Lab Number:** L1403530

Project Number: 115058 **Report Date:** 02/25/14

SAMPLE RESULTS

Lab ID:	L1403530-09	Date Collected:	02/14/14 10:50
Client ID:	MW-42R (FIELD FILTERED 0.45)	Date Received:	02/14/14
Sample Location:	NEW BEDFORD, MA	Field Prep:	Field Filtered
Matrix:	Water	Extraction Method:	EPA 3510C
Analytical Method:	97,8082	Extraction Date:	02/18/14 04:57
Analytical Date:	02/18/14 16:29	Cleanup Method1:	EPA 3665A
Analyst:	KB	Cleanup Date1:	02/18/14
		Cleanup Method2:	EPA 3660B
		Cleanup Date2:	02/18/14

Parameter	Result	Qualifier	Units	RL	MDL	Dilution Factor	Column
MCP Polychlorinated Biphenyls - Westborough Lab							
Aroclor 1016	ND		ug/l	0.250	--	1	A
Aroclor 1221	ND		ug/l	0.250	--	1	A
Aroclor 1232	ND		ug/l	0.250	--	1	A
Aroclor 1242	ND		ug/l	0.250	--	1	A
Aroclor 1248	ND		ug/l	0.250	--	1	A
Aroclor 1254	ND		ug/l	0.250	--	1	A
Aroclor 1260	ND		ug/l	0.250	--	1	A
Aroclor 1262	ND		ug/l	0.250	--	1	A
Aroclor 1268	ND		ug/l	0.250	--	1	A

Surrogate	% Recovery	Qualifier	Acceptance Criteria	Column
2,4,5,6-Tetrachloro-m-xylene	67		30-150	A
Decachlorobiphenyl	97		30-150	A
2,4,5,6-Tetrachloro-m-xylene	69		30-150	B
Decachlorobiphenyl	83		30-150	B

Project Name: NBHS IRA PSWS

Project Number: 115058

Lab Number: L1403530

Report Date: 02/25/14

Method Blank Analysis
Batch Quality Control

Analytical Method: 97,8082
Analytical Date: 02/18/14 16:56
Analyst: KB

Extraction Method: EPA 3510C
Extraction Date: 02/18/14 04:57
Cleanup Method1: EPA 3665A
Cleanup Date1: 02/18/14
Cleanup Method2: EPA 3660B
Cleanup Date2: 02/18/14

Parameter	Result	Qualifier	Units	RL	MDL	Column
MCP Polychlorinated Biphenyls - Westborough Lab for sample(s): 01-09 Batch: WG670876-1						
Aroclor 1016	ND		ug/l	0.250	--	A
Aroclor 1221	ND		ug/l	0.250	--	A
Aroclor 1232	ND		ug/l	0.250	--	A
Aroclor 1242	ND		ug/l	0.250	--	A
Aroclor 1248	ND		ug/l	0.250	--	A
Aroclor 1254	ND		ug/l	0.250	--	A
Aroclor 1260	ND		ug/l	0.250	--	A
Aroclor 1262	ND		ug/l	0.250	--	A
Aroclor 1268	ND		ug/l	0.250	--	A

Surrogate	%Recovery	Qualifier	Acceptance Criteria	Column
2,4,5,6-Tetrachloro-m-xylene	50		30-150	A
Decachlorobiphenyl	95		30-150	A
2,4,5,6-Tetrachloro-m-xylene	51		30-150	B
Decachlorobiphenyl	82		30-150	B

Lab Control Sample Analysis
Batch Quality Control

Project Name: NBHS IRA PSWS
Project Number: 115058

Lab Number: L1403530
Report Date: 02/25/14

Parameter	LCS %Recovery	Qual	LCSD %Recovery	Qual	%Recovery Limits	RPD	Qual	RPD Limits	Column
MCP Polychlorinated Biphenyls - Westborough Lab Associated sample(s): 01-09 Batch: WG670876-2 WG670876-3									
Aroclor 1016	95		96		40-140	1		20	A
Aroclor 1260	106		110		40-140	4		20	A

Surrogate	LCS %Recovery	Qual	LCSD %Recovery	Qual	Acceptance Criteria	Column
2,4,5,6-Tetrachloro-m-xylene	57		62		30-150	A
Decachlorobiphenyl	92		91		30-150	A
2,4,5,6-Tetrachloro-m-xylene	56		61		30-150	B
Decachlorobiphenyl	81		78		30-150	B

Project Name: NBHS IRA PSWS
Project Number: 115058

Lab Number: L1403530
Report Date: 02/25/14

Sample Receipt and Container Information

Were project specific reporting limits specified? YES

Reagent H2O Preserved Vials Frozen on: NA

Cooler Information Custody Seal

Cooler	
A	Absent
B	Absent

Container Information

Container ID	Container Type	Cooler	pH	Temp deg C	Pres	Seal	Analysis(*)
L1403530-01A	Vial HCl preserved	A	N/A	4.1	Y	Absent	MCP-8260-10(14)
L1403530-01B	Vial HCl preserved	A	N/A	4.1	Y	Absent	MCP-8260-10(14)
L1403530-01C	Vial HCl preserved	A	N/A	4.1	Y	Absent	MCP-8260-10(14)
L1403530-01D	Amber 1000ml unpreserved	A	7	4.1	Y	Absent	MCP-8082-10(365)
L1403530-01E	Amber 1000ml unpreserved	A	7	4.1	Y	Absent	MCP-8082-10(365)
L1403530-01F	Amber 1000ml unpreserved	A	7	4.1	Y	Absent	TPH-DRO-D(7)
L1403530-01G	Amber 1000ml unpreserved	A	7	4.1	Y	Absent	TPH-DRO-D(7)
L1403530-02A	Amber 1000ml unpreserved	A	7	4.1	Y	Absent	FILTER-EXT(1)
L1403530-02B	Amber 1000ml unpreserved	A	7	4.1	Y	Absent	FILTER-EXT(1)
L1403530-02C	Amber 1000ml unpreserved	A	7	4.1	Y	Absent	FILTER-EXT(1)
L1403530-02D	Amber 1000ml unpreserved	A	7	4.1	Y	Absent	FILTER-EXT(1)
L1403530-02S	Amber 1000ml unpreserved split	A	N/A	4.1	Y	Absent	MCP-8082-10(365)
L1403530-02T	Amber 1000ml unpreserved split	A	N/A	4.1	Y	Absent	MCP-8082-10(365)
L1403530-02X	Amber 1000ml unpreserved split	A	N/A	4.1	Y	Absent	TPH-DRO-D(7)
L1403530-02Y	Amber 1000ml unpreserved split	A	N/A	4.1	Y	Absent	TPH-DRO-D(7)
L1403530-03A	Vial HCl preserved	B	N/A	4.8	Y	Absent	MCP-8260-10(14)
L1403530-03B	Vial HCl preserved	B	N/A	4.8	Y	Absent	MCP-8260-10(14)
L1403530-03C	Vial HCl preserved	B	N/A	4.8	Y	Absent	MCP-8260-10(14)
L1403530-03D	Amber 1000ml unpreserved	B	7	4.8	Y	Absent	MCP-8082-10(365)
L1403530-03E	Amber 1000ml unpreserved	B	7	4.8	Y	Absent	MCP-8082-10(365)
L1403530-04A	Vial HCl preserved	B	N/A	4.8	Y	Absent	MCP-8260-10(14)
L1403530-04B	Vial HCl preserved	B	N/A	4.8	Y	Absent	MCP-8260-10(14)
L1403530-04C	Vial HCl preserved	B	N/A	4.8	Y	Absent	MCP-8260-10(14)
L1403530-04D	Amber 1000ml unpreserved	B	7	4.8	Y	Absent	MCP-8082-10(365)
L1403530-04E	Amber 1000ml unpreserved	B	7	4.8	Y	Absent	MCP-8082-10(365)
L1403530-05A	Amber 1000ml unpreserved	B	7	4.8	Y	Absent	FILTER-EXT(1)

*Values in parentheses indicate holding time in days

Project Name: NBHS IRA PSWS
Project Number: 115058

Lab Number: L1403530
Report Date: 02/25/14

Container Information

Container ID	Container Type	Cooler	pH	Temp deg C	Pres	Seal	Analysis(*)
L1403530-05B	Amber 1000ml unpreserved	B	7	4.8	Y	Absent	FILTER-EXT(1)
L1403530-05X	Amber 1000ml unpreserved split	B	N/A	4.8	Y	Absent	MCP-8082-10(365)
L1403530-05Y	Amber 1000ml unpreserved split	B	N/A	4.8	Y	Absent	MCP-8082-10(365)
L1403530-06A	Amber 1000ml unpreserved	B	7	4.8	Y	Absent	MCP-8082-10(365)
L1403530-06B	Amber 1000ml unpreserved	B	7	4.8	Y	Absent	MCP-8082-10(365)
L1403530-07A	Vial HCl preserved	B	N/A	4.8	Y	Absent	MCP-8260-10(14)
L1403530-07B	Vial HCl preserved	B	N/A	4.8	Y	Absent	MCP-8260-10(14)
L1403530-07C	Vial HCl preserved	B	N/A	4.8	Y	Absent	MCP-8260-10(14)
L1403530-07D	Amber 1000ml unpreserved	B	7	4.8	Y	Absent	MCP-8082-10(365)
L1403530-07E	Amber 1000ml unpreserved	B	7	4.8	Y	Absent	MCP-8082-10(365)
L1403530-08A	Amber 1000ml unpreserved	B	7	4.8	Y	Absent	FILTER-EXT(1)
L1403530-08B	Amber 1000ml unpreserved	B	7	4.8	Y	Absent	FILTER-EXT(1)
L1403530-08X	Amber 1000ml unpreserved split	B	N/A	4.8	Y	Absent	MCP-8082-10(365)
L1403530-08Y	Amber 1000ml unpreserved split	B	N/A	4.8	Y	Absent	MCP-8082-10(365)
L1403530-09A	Amber 1000ml unpreserved	B	7	4.8	Y	Absent	MCP-8082-10(365)
L1403530-09B	Amber 1000ml unpreserved	B	7	4.8	Y	Absent	MCP-8082-10(365)
L1403530-10A	Vial HCl preserved	B	N/A	4.8	Y	Absent	MCP-8260-10(14)

Container Comments

L1403530-02A

L1403530-02B

L1403530-02C

L1403530-02D

L1403530-05A

L1403530-05B

L1403530-08A

L1403530-08B

*Values in parentheses indicate holding time in days

Project Name:	NBHS IRA PSWS	**Lab Number:**	L1403530
Project Number:	115058	**Report Date:**	02/25/14

GLOSSARY

Acronyms

EDL	- Estimated Detection Limit: This value represents the level to which target analyte concentrations are reported as estimated values, when those target analyte concentrations are quantified below the reporting limit (RL). The EDL includes any adjustments from dilutions, concentrations or moisture content, where applicable. The use of EDLs is specific to the analysis of PAHs using Solid-Phase Microextraction (SPME).
EPA	- Environmental Protection Agency.
LCS	- Laboratory Control Sample: A sample matrix, free from the analytes of interest, spiked with verified known amounts of analytes or a material containing known and verified amounts of analytes.
LCSD	- Laboratory Control Sample Duplicate: Refer to LCS.
LFB	- Laboratory Fortified Blank: A sample matrix, free from the analytes of interest, spiked with verified known amounts of analytes or a material containing known and verified amounts of analytes.
MDL	- Method Detection Limit: This value represents the level to which target analyte concentrations are reported as estimated values, when those target analyte concentrations are quantified below the reporting limit (RL). The MDL includes any adjustments from dilutions, concentrations or moisture content, where applicable.
MS	- Matrix Spike Sample: A sample prepared by adding a known mass of target analyte to a specified amount of matrix sample for which an independent estimate of target analyte concentration is available.
MSD	- Matrix Spike Sample Duplicate: Refer to MS.
NA	- Not Applicable.
NC	- Not Calculated: Term is utilized when one or more of the results utilized in the calculation are non-detect at the parameter's reporting unit.
NI	- Not Ignitable.
RL	- Reporting Limit: The value at which an instrument can accurately measure an analyte at a specific concentration. The RL includes any adjustments from dilutions, concentrations or moisture content, where applicable.
RPD	- Relative Percent Difference: The results from matrix and/or matrix spike duplicates are primarily designed to assess the precision of analytical results in a given matrix and are expressed as relative percent difference (RPD). Values which are less than five times the reporting limit for any individual parameter are evaluated by utilizing the absolute difference between the values; although the RPD value will be provided in the report.
SRM	- Standard Reference Material: A reference sample of a known or certified value that is of the same or similar matrix as the associated field samples.

Footnotes

1	- The reference for this analyte should be considered modified since this analyte is absent from the target analyte list of the original method.

Terms

Analytical Method: Both the document from which the method originates and the analytical reference method. (Example: EPA 8260B is shown as 1,8260B.) The codes for the reference method documents are provided in the References section of the Addendum.

Data Qualifiers

A	- Spectra identified as "Aldol Condensation Product".
B	- The analyte was detected above the reporting limit in the associated method blank. Flag only applies to associated field samples that have detectable concentrations of the analyte at less than ten times (10x) the concentration found in the blank. For MCP-related projects, flag only applies to associated field samples that have detectable concentrations of the analyte at less than ten times (10x) the concentration found in the blank. For DOD-related projects, flag only applies to associated field samples that have detectable concentrations of the analyte at less than ten times (10x) the concentration found in the blank AND the analyte was detected above one-half the reporting limit (or above the reporting limit for common lab contaminants) in the associated method blank. For NJ-Air-related projects, flag only applies to associated field samples that have detectable concentrations of the analyte above the reporting limit.
C	- Co-elution: The target analyte co-elutes with a known lab standard (i.e. surrogate, internal standards, etc.) for co-extracted analyses.
D	- Concentration of analyte was quantified from diluted analysis. Flag only applies to field samples that have detectable concentrations of the analyte.
E	- Concentration of analyte exceeds the range of the calibration curve and/or linear range of the instrument.
G	- The concentration may be biased high due to matrix interferences (i.e, co-elution) with non-target compound(s). The result should be considered estimated.
H	- The analysis of pH was performed beyond the regulatory-required holding time of 15 minutes from the time of sample collection.
I	- The lower value for the two columns has been reported due to obvious interference.

Report Format: Data Usability Report

Project Name:	NBHS IRA PSWS	**Lab Number:**	L1403530
Project Number:	115058	**Report Date:**	02/25/14

Data Qualifiers

M - Reporting Limit (RL) exceeds the MCP CAM Reporting Limit for this analyte.

NJ - Presumptive evidence of compound. This represents an estimated concentration for Tentatively Identified Compounds (TICs), where the identification is based on a mass spectral library search.

P - The RPD between the results for the two columns exceeds the method-specified criteria.

Q - The quality control sample exceeds the associated acceptance criteria. For DOD-related projects, LCS and/or Continuing Calibration Standard exceedences are also qualified on all associated sample results. Note: This flag is not applicable for matrix spike recoveries when the sample concentration is greater than 4x the spike added or for batch duplicate RPD when the sample concentrations are less than 5x the RL. (Metals only.)

R - Analytical results are from sample re-analysis.

RE - Analytical results are from sample re-extraction.

S - Analytical results are from modified screening analysis.

J - Estimated value. This represents an estimated concentration for Tentatively Identified Compounds (TICs).

ND - Not detected at the reporting limit (RL) for the sample.

Report Format: Data Usability Report

Project Name: NBHS IRA PSWS **Lab Number:** L1403530
Project Number: 115058 **Report Date:** 02/25/14

REFERENCES

1 Test Methods for Evaluating Solid Waste: Physical/Chemical Methods. EPA SW-846. Third Edition. Updates I - IV, 2007.

97 EPA Test Methods (SW-846) with QC Requirements & Performance Standards for the Analysis of EPA SW-846 Methods under the Massachusetts Contingency Plan, WSC-CAM-IIA, IIB, IIIA, IIIB, IIIC, IIID, VA, VB, VC, VIA, VIB, VIIIA and VIIIB, July 2010.

LIMITATION OF LIABILITIES

Alpha Analytical performs services with reasonable care and diligence normal to the analytical testing laboratory industry. In the event of an error, the sole and exclusive responsibility of Alpha Analytical shall be to re-perform the work at it's own expense. In no event shall Alpha Analytical be held liable for any incidental, consequential or special damages, including but not limited to, damages in any way connected with the use of, interpretation of, information or analysis provided by Alpha Analytical.

We strongly urge our clients to comply with EPA protocol regarding sample volume, preservation, cooling, containers, sampling procedures, holding time and splitting of samples in the field.

Certification Information

Last revised December 11, 2013

The following analytes are not included in our NELAP Scope of Accreditation:

Westborough Facility
EPA 524.2: Acetone, 2-Butanone (Methyl ethyl ketone (MEK)), Tert-butyl alcohol, 2-Hexanone, Tetrahydrofuran, 1,3,5-Trichlorobenzene, 4-Methyl-2-pentanone (MIBK), Carbon disulfide, Diethyl ether.
EPA 8260C: 1,2,4,5-Tetramethylbenzene, 4-Ethyltoluene, Iodomethane (methyl iodide), Methyl methacrylate, Azobenzene.
EPA 8330A/B: PETN, Picric Acid, Nitroglycerine, 2,6-DANT, 2,4-DANT.
EPA 8270D: 1-Methylnaphthalene, Dimethylnaphthalene,1,4-Diphenylhydrazine.
EPA 625: 4-Chloroaniline, 4-Methylphenol.
SM4500: Soil: Total Phosphorus, TKN, NO2, NO3.
EPA 9071: Total Petroleum Hydrocarbons, Oil & Grease.

Mansfield Facility
EPA 8270D: Biphenyl.
EPA TO-15: Halothane, 2,4,4-Trimethyl-2-pentene, 2,4,4-Trimethyl-1-pentene, Thiophene, 2-Methylthiophene, 3-Methylthiophene, 2-Ethylthiophene, 1,2,3-Trimethylbenzene, Indan, Indene, 1,2,4,5-Tetramethylbenzene, Benzothiophene, 1-Methylnaphthalene.

The following analytes are included in our Massachusetts DEP Scope of Accreditation, Westborough Facility:

Drinking Water
EPA 200.8: Sb,As,Ba,Be,Cd,Cr,Cu,Pb,Ni,Se,Tl; **EPA 200.7**: Ba,Be,Ca,Cd,Cr,Cu,Na; **EPA 245.1:** Mercury;
EPA 300.0: Nitrate-N, Fluoride, Sulfate; **EPA 353.2**: Nitrate-N, Nitrite-N; **SM4500NO3-F**: Nitrate-N, Nitrite-N; **SM4500F-C, SM4500CN-CE, EPA 180.1, SM2130B, SM4500Cl-D, SM2320B, SM2540C, SM4500H-B**
EPA 332: Perchlorate.
Microbiology: **SM9215B; SM9223-P/A, SM9223B-Colilert-QT, Enterolert-QT.**

Non-Potable Water
EPA 200.8: Al,Sb,As,Be,Cd,Cr,Cu,Pb,Mn,Ni,Se,Ag,Tl,Zn;
EPA 200.7: Al,Sb,As,Be,Cd,Ca,Cr,Co,Cu,Fe,Pb,Mg,Mn,Mo,Ni,K,Se,Ag,Na,Sr,Ti,Tl,V,Zn;
EPA 245.1, SM4500H,B, EPA 120.1, SM2510B, SM2540C, SM2340B, SM2320B, SM4500CL-E, SM4500F-BC, SM426C, SM4500NH3-BH, **EPA 350.1**: Ammonia-N, **LACHAT 10-107-06-1-B**: Ammonia-N, **SM4500NO3-F,**
EPA 353.2: Nitrate-N**, SM4500NH3-BC-NES, EPA 351.1, SM4500P-E, SM4500P-B, E, SM5220D, EPA 410.4, SM5210B, SM5310C, SM4500CL-D, EPA 1664, SM14 510AC, EPA 420.1, SM4500-CN-CE, SM2540D.**
EPA 624: Volatile Halocarbons & Aromatics,
EPA 608: Chlordane, Toxaphene, Aldrin, alpha-BHC, beta-BHC, gamma-BHC, delta-BHC, Dieldrin, DDD, DDE, DDT, Endosulfan I, Endosulfan II, Endosulfan sulfate, Endrin, Endrin Aldehyde, Heptachlor, Heptachlor Epoxide, PCBs
EPA 625: SVOC (Acid/Base/Neutral Extractables), **EPA 600/4-81-045**: PCB-Oil.
Microbiology: **SM9223B-Colilert-QT; Enterolert-QT, SM9222D-MF**.

For a complete listing of analytes and methods, please contact your Alpha Project Manager.

CHAIN OF CUSTODY

PAGE 1 OF 1

Date Rec'd in Lab: 2/14/14

ALPHA Job #: L1403530

ALPHA ANALYTICAL World Class Chemistry
8 Walkup Drive, Westboro, MA 01581, Tel: 508-898-9220
320 Forbes Blvd, Mansfield, MA 02048, Tel: 508-822-9300

Client Information

Client: TRC
Address: 650 Suffolk St. Lowell, MA 01854
Phone: 978-970-5600
Email: aleonard@trcsolutions.com dsullivan

Project Information

Project Name: NBHS IRA PSWS
Project Location: New Bedford, MA
Project #: 115058
Project Manager: David Sullivan
ALPHA Quote #:

Turn-Around Time

☒ Standard ☐ RUSH (only confirmed if pre-approved!)
Date Due: 2/25/14

Report Information - Data Deliverables

☐ ADEx ☒ EMAIL

Billing Information

☐ Same as Client info PO #: P115058

Regulatory Requirements & Project Information Requirements

☒ Yes ☐ No MA MCP Analytical Methods ☐ Yes ☐ No CT RCP Analytical Methods
☐ Yes ☐ No Matrix Spike Required on this SDG? (Required for MCP Inorganics)
☐ Yes ☐ No GW1 Standards (Info Required for Metals & EPH with Targets)
☐ Yes ☐ No NPDES RGP
☐ Other State /Fed Program MA Criteria MCP

Additional Project Information:
★ PCB + TPH filtered by LAB using 0.2 µm filter.
– TPH detection limit to be < 200 ppb

ANALYSIS: VOC: ☒ 8260 ☐ 624 ☐ 524.2; SVOC: ☐ ABN ☐ PAH; METALS: ☐ MCP 13 ☐ MCP 14 ☐ RCP 15; METALS: ☐ RCRA5 ☐ RCRA8 ☐ PP13; EPH: ☐ Ranges & Targets ☐ Ranges Only; VPH: ☐ Ranges & Targets ☐ Ranges Only; ☐ PCB ☐ PEST; TPH: ☒ Quant Only ☐ Fingerprint; ★PCB (0.2µm lab filtered); ★TPH (0.2µm lab filtered); ★PCB (0.45 field filtered)

SAMPLE INFO: Filtration ☒ Field ☒ Lab to do; Preservation ☐ Lab to do

ALPHA Lab ID (Lab Use Only)	Sample ID	Collection Date	Collection Time	Sample Matrix	Sampler Initials	VOC	SVOC	METALS	METALS	EPH	VPH	PCB	TPH	★PCB (0.2µm lab filtered)	★TPH (0.2µm lab filtered)	★PCB (0.45 field filtered)				Sample Comments	Total # Bottles
03530-02 .01	Influent	2/14/14	0800	I	KDJ	X						X	X	X	X						11
-03 .02	Effluent	2/14/14	0810	E	KDJ	X						X									5
-04,05,06 .03	MW-27R	2/14/14	0955	GW	KDJ	X						X		X		X					9
-07,08,09 .04	MW-42R	2/14/14	1050	GW	KDJ	X						X		X		X					9
-10 .05	Trip Blank	2/11/14				X															1
Container Type						√						A	A	A	A	A					
Preservative						B						A	A	A	A	A					

Container Type
P= Plastic
A= Amber glass
V= Vial
G= Glass
B= Bacteria cup
C= Cube
O= Other
E= Encore
D= BOD Bottle

Preservative
A= None
B= HCl
C= HNO_3
D= H_2SO_4
E= NaOH
F= MeOH
G= $NaHSO_4$
H = $Na_2S_2O_3$
I= Ascorbic Acid
J = NH_4Cl
K= Zn Acetate
O= Other

Relinquished By:	Date/Time	Received By:	Date/Time
[signature]	2/14/14 15:40	[signature]	2/14/14 15:40
[signature]	2/14/14 17:45	[signature]	2/14/14 17:45

All samples submitted are subject to Alpha's Terms and Conditions. See reverse side.

FORM NO: 01-01 (rev. 12-Mar-2012)

CHAIN OF CUSTODY

PAGE 1 OF 1

Date Rec'd in Lab: 2/14/14

ALPHA Job #: L1403530

ALPHA ANALYTICAL — World Class Chemistry
8 Walkup Drive, Westboro, MA 01581, Tel: 508-898-9220
320 Forbes Blvd, Mansfield, MA 02048, Tel: 508-822-9300

Client Information

Client: TRC
Address: 650 Suffolk St. Lowell, MA 01854
Phone: 978-970-5600
Email: aleonard@trcsolutions.com dsullivan

Project Information

Project Name: NBHS IRA PSWS
Project Location: New Bedford, MA
Project #: 115058
Project Manager: David Sullivan
ALPHA Quote #:

Turn-Around Time

☒ Standard ☐ RUSH (only confirmed if pre-approved)
Date Due: 2/25/14

Report Information - Data Deliverables

☐ ADEx ☒ EMAIL

Billing Information

☐ Same as Client info PO #: P115058

Regulatory Requirements & Project Information Requirements

☒ Yes ☐ No MA MCP Analytical Methods ☐ Yes ☐ No CT RCP Analytical Methods
☐ Yes ☐ No Matrix Spike Required on this SDG? (Required for MCP Inorganics)
☐ Yes ☐ No GW1 Standards (Info Required for Metals & EPH with Targets)
☐ Yes ☐ No NPDES RGP
☐ Other State /Fed Program MA Criteria MCP

Additional Project Information:
★ PCB + TPH filtered by LAB using 0.2 µm filter.
– TPH detection limit to be < 200 ppb

ALPHA Lab ID (Lab Use Only)	Sample ID	Collection Date	Collection Time	Sample Matrix	Sampler Initials	VOC: ☒ 8260 ☐ 624 ☐ 524.2	SVOC: ☐ ABN ☐ PAH	METALS: ☐ MCP 13 ☐ MCP 14 ☐ RCP 15	METALS: ☐ RCRA5 ☐ RCRA8 ☐ PP13	EPH: ☐ Ranges & Targets ☐ Ranges Only	VPH: ☐ Ranges & Targets ☐ Ranges Only	☒ PCB ☐ PEST	TPH: ☒ Quant Only ☐ Fingerprint	★ PCB (0.2 µm lab filtered)	★ TPH (0.2 µm lab filtered)	★ PCB (0.45 field filtered)				Sample Comments	TOTAL # BOTTLES
03530.01	Influent	2/14/14	0800	I	KDJ	X						X	X	X	X						11
.02	Effluent	2/14/14	0810	E	KDJ	X						X									5
.03	MW-27R	2/14/14	0955	GW	KDJ	X						X		X		X					9
.04	MW-42R	2/14/14	1050	GW	KDJ	X						X		X		X					9
.05	Trip Blank	2/11/14				X															1
	Container Type					√						A	A	A	A	A					
	Preservative					B						A	A	A	A	A					

Container Type: P= Plastic, A= Amber glass, V= Vial, G= Glass, B= Bacteria cup, C= Cube, O= Other, E= Encore, D= BOD Bottle

Preservative: A= None, B= HCl, C= HNO_3, D= H_2SO_4, E= NaOH, F= MeOH, G= $NaHSO_4$, H= $Na_2S_2O_3$, I= Ascorbic Acid, J= NH_4Cl, K= Zn Acetate, O= Other

Relinquished By:	Date/Time	Received By:	Date/Time
[signature]	2/14/14 15:40	[signature]	2/14/14 15:40
[signature]	2/14/14 17:45	[signature]	2/14/14 17:45

All samples submitted are subject to Alpha's Terms and Conditions. See reverse side.

FORM NO: 01-01 (rev. 12-Mar-2012)

7A
CONTINUING CALIBRATION CHECK

Lab Name: Alpha Analytical Labs

SDG No.: L1403530

Instrument ID: Jack.i Calibration Date: 17-FEB-2014 Time: 05:26

Lab File ID: 0217A02 Init. Calib. Date(s): 28-JAN-2 28-JAN-2

Sample No: 8260 CCAL Init. Calib. Times : 06:41 09:56

Compound	RRF	RRF	MIN RRF	%D	MAX %D	
dichlorodifluoromethane	.68809	.54578	.1	-21	20	F
chloromethane	.83456	.74043	.1	-11	20	
vinyl chloride	.85555	.79941	.1	-7	20	
bromomethane	.34826	.3607	.1	4	20	
chloroethane	.48234	.45674	.1	-5	20	
trichlorofluoromethane	.97126	.98745	.1	2	20	
ethyl ether	.26649	.26064	.05	-2	20	
1,1,-dichloroethene	.64223	.65073	.1	1	20	
carbon disulfide	1.6759	1.5868	.1	-5	20	
freon-113	.678	.69449	.1	2	20	
iodomethane	100	60.852	.05	-39	20	F
acrolein	.0752	.05467	.05	-27	20	F
methylene chloride	.68862	.7181	.1	4	20	
acetone	100	86.526	.1	-13	20	
trans-1,2-dichloroethene	.69832	.70945	.1	2	20	
methyl acetate	.27728	.26358	.1	-5	20	
methyl tert butyl ether	1.1426	1.0876	.1	-5	20	
tert butyl alcohol	.0326	.03348	.05	3	20	F
Diisopropyl Ether	1.8030	1.6793	.01	-7	20	
1,1-dichloroethane	1.2979	1.3065	.2	1	20	
acrylonitrile	.15507	.14412	.05	-7	20	
Halothane	.56525	.6074	.05	7	20	
Ethyl-Tert-Butyl-Ether	1.5918	1.5084	.05	-5	20	
vinyl acetate	.91542	.82704	.05	-10	20	
cis-1,2-dichloroethene	.78607	.79786	.1	2	20	
2,2-dichloropropane	1.0107	1.0718	.05	6	20	
cyclohexane	1.3134	1.2472	.01	-5	30	
bromochloromethane	.35916	.39361	.05	10	20	
chloroform	1.1580	1.2392	.2	7	20	
carbontetrachloride	.93521	.99014	.1	6	20	
tetrahydrofuran	.12775	.11848	.05	-7	20	
ethyl acetate	.34464	.30651	.05	-11	20	
1,1,1-trichloroethane	1.0357	1.1065	.1	7	20	
1,1-dichloropropene	.85865	.85733	.05	0	20	
2-butanone	100	75.538	.1	-24	20	F
benzene	2.7058	2.6341	.5	-3	20	
Tertiary-Amyl Methyl Ether	1.2470	1.2313	.05	-1	20	
1,2-dichloroethane	.71159	.74676	.1	5	20	

FORM VII MCP-8260-10

7A
CONTINUING CALIBRATION CHECK

Lab Name: Alpha Analytical Labs

SDG No.: L1403530

Instrument ID: Jack.i Calibration Date: 17-FEB-2014 Time: 05:26

Lab File ID: 0217A02 Init. Calib. Date(s): 28-JAN-2 28-JAN-2

Sample No: 8260 CCAL Init. Calib. Times : 06:41 09:56

Compound	$\overline{RRF}$	RRF	MIN RRF	%D	MAX %D	
methyl cyclohexane	1.0107	1.0024	.01	-1	30	
trichloroethene	.62544	.64775	.2	4	20	
dibromomethane	.33993	.35051	.05	3	20	
1,2-dichloropropane	.6601	.6321	.1	-4	20	
bromodichloromethane	.80171	.81782	.2	2	20	
1,4-dioxane	.00359	.00358	.05	0	20	F
2-chloroethylvinyl ether	.12324	.11085	.05	-10	20	
cis-1,3-dichloropropene	.93496	.92228	.2	-1	20	
toluene	1.9649	1.8714	.4	-5	20	
tetrachloroethene	.87034	.88968	.2	2	20	
4-methyl-2-pentanone	.1333	.137	.1	3	20	
trans-1,3-dichloropropene	.81539	.74053	.1	-9	20	
1,1,2-trichloroethane	.39093	.35669	.1	-9	20	
ethyl-methacrylate	.61006	.59554	.01	-2	30	
chlorodibromomethane	.63417	.58731	.1	-7	20	
1,3-dichloropropane	.84179	.76491	.05	-9	20	
1,2-dibromoethane	.50574	.4573	.1	-10	20	
2-hexanone	.27167	.25316	.1	-7	20	
chlorobenzene	2.1898	2.1633	.5	-1	20	
ethyl benzene	3.6442	3.5643	.1	-2	20	
1,1,1,2-tetrachloroethane	.68885	.6756	.05	-2	20	
p/m xylene	1.5009	1.4866	.1	-1	20	
o xylene	1.3966	1.3786	.3	-1	20	
bromoform	.62885	.59437	.1	-5	20	
styrene	2.2981	2.2839	.3	-1	20	
isopropylbenzene	6.2026	6.0176	.1	-3	20	
bromobenzene	1.6289	1.6239	.05	0	20	
n-propylbenzene	6.3111	6.1189	.05	-3	20	
1,4-dichlorobutane	1.4932	1.3722	.01	-8	20	
1,1,2,2,-tetrachloroethane	.95129	.874	.3	-8	20	
4-ethyltoluene	6.0834	6.0144	.05	-1	20	
2-chlorotoluene	4.5252	4.3711	.05	-3	20	
1,2,3-trichloropropane	.77817	.67512	.05	-13	20	
1,3,5-trimethybenzene	4.8192	4.7576	.05	-1	20	
trans-1,4-dichloro-2-butene	.28451	.23776	.05	-16	20	
4-chorotoluene	4.1397	3.9898	.05	-4	20	
tert-butylbenzene	4.0962	4.0880	.05	0	20	
1,2,4-trimethylbenzene	4.6989	4.5117	.05	-4	20	

FORM VII MCP-8260-10

7A
CONTINUING CALIBRATION CHECK

Lab Name: Alpha Analytical Labs

SDG No.: L1403530

Instrument ID: Jack.i Calibration Date: 17-FEB-2014 Time: 05:26

Lab File ID: 0217A02 Init. Calib. Date(s): 28-JAN-2 28-JAN-2

Sample No: 8260 CCAL Init. Calib. Times : 06:41 09:56

Compound	RRF	RRF	MIN RRF	%D	MAX %D
sec-butylbenzene	5.4069	5.3521	.01	-1	20
p-isopropyltoluene	4.7274	4.7352	.05	0	20
1,3-dichlorobenzene	2.9383	2.8877	.6	-2	20
1,4-dichlorobenzene	2.9961	2.9176	.5	-3	20
p-diethylbenzene	2.5820	2.5612	.05	-1	20
n-butylbenzene	3.3062	3.2990	.05	0	20
1,2-dichlorobenzene	2.7033	2.6325	.4	-3	20
1,2,4,5-tetramethylbenzene	3.8719	3.7990	.05	-2	20
1,2-dibromo-3-chloropropane	.15841	.14371	.05	-9	20
1,3,5-trichlorobenzene	.85673	.98393	.05	15	20
1,2,4-trichlorobenzene	1.3919	1.3305	.2	-4	20
hexachlorobutadiene	.47174	.50758	.05	8	20
naphthalene	3.1906	2.9652	.05	-7	20
1,2,3-trichlorobenzene	1.1414	1.1014	.05	-3	20
dibromofluoromethane	.27629	.28596	.05	4	20
1,2-dichloroethane-d4	.25087	.24754	.05	-1	20
toluene-d8	1.1588	1.0832	.01	-7	20
4-bromofluorobenzene	.81372	.78389	.05	-4	20

FORM VII MCP-8260-10

ANALYTICAL REPORT

Lab Number:	L1403916
Client:	TRC Environmental Consultants Wannalancit Mills 650 Suffolk Street Lowell, MA 01854
ATTN:	David Sullivan
Phone:	(978) 656-3565
Project Name:	NBHS IRA
Project Number:	115058
Report Date:	02/28/14

The original project report/data package is held by Alpha Analytical. This report/data package is paginated and should be reproduced only in its entirety. Alpha Analytical holds no responsibility for results and/or data that are not consistent with the original.

Certifications & Approvals: MA (M-MA086), NY (11148), CT (PH-0574), NH (2003), NJ NELAP (MA935), RI (LAO00065), ME (MA00086), PA (68-03671), USDA (Permit #P-330-11-00240), NC (666), TX (T104704476), DOD (L2217), US Army Corps of Engineers.

Eight Walkup Drive, Westborough, MA 01581-1019
508-898-9220 (Fax) 508-898-9193 800-624-9220 - www.alphalab.com

Project Name: NBHS IRA
Project Number: 115058

Lab Number: L1403916
Report Date: 02/28/14

Alpha Sample ID	Client ID	Sample Location	Collection Date/Time
L1403916-01	MW-27R	NBHS NEW BEDFORD	02/21/14 09:50
L1403916-02	MW-27R (FIELD FILTERED 0.45)	NBHS NEW BEDFORD	02/21/14 09:50
L1403916-03	MW-27R (FILTERED 0.2)	NBHS NEW BEDFORD	02/21/14 09:50
L1403916-04	MW-28	NBHS NEW BEDFORD	02/21/14 10:40
L1403916-05	MW-28 (FIELD FILTERED 0.45)	NBHS NEW BEDFORD	02/21/14 10:40
L1403916-06	MW-41	NBHS NEW BEDFORD	02/21/14 14:05
L1403916-07	MW-41 (FIELD FILTERED 0.45)	NBHS NEW BEDFORD	02/21/14 14:05
L1403916-08	MW-41 (FILTERED 0.2)	NBHS NEW BEDFORD	02/21/14 14:05
L1403916-09	MW-42R	NBHS NEW BEDFORD	02/21/14 14:40
L1403916-10	MW-42R (FIELD FILTERED 0.45)	NBHS NEW BEDFORD	02/21/14 14:40
L1403916-11	MW-42R (FILTERED 0.2)	NBHS NEW BEDFORD	02/21/14 14:40
L1403916-12	DUP-1	NBHS NEW BEDFORD	02/21/14 00:00
L1403916-13	DUP-1 (FIELD FILTERED 0.45)	NBHS NEW BEDFORD	02/21/14 00:00
L1403916-14	DUP-1 (FILTERED 0.2)	NBHS NEW BEDFORD	02/21/14 00:00
L1403916-15	TRIP BLANK	NBHS NEW BEDFORD	02/21/14 00:00

Project Name: NBHS IRA **Lab Number:** L1403916

Project Number: 115058 **Report Date:** 02/28/14

MADEP MCP Response Action Analytical Report Certification

This form provides certifications for all samples performed by MCP methods. Please refer to the Sample Results and Container Information sections of this report for specification of MCP methods used for each analysis. The following questions pertain only to MCP Analytical Methods.

An affirmative response to questions A through F is required for "Presumptive Certainty" status		
A	Were all samples received in a condition consistent with those described on the Chain-of-Custody, properly preserved (including temperature) in the field or laboratory, and prepared/analyzed within method holding times?	YES
B	Were the analytical method(s) and all associated QC requirements specified in the selected CAM protocol(s) followed?	YES
C	Were all required corrective actions and analytical response actions specified in the selected CAM protocol(s) implemented for all identified performance standard non-conformances?	YES
D	Does the laboratory report comply with all the reporting requirements specified in CAM VII A, "Quality Assurance and Quality Control Guidelines for the Acquisition and Reporting of Analytical Data?"	YES
E a.	VPH, EPH, and APH Methods only: Was each method conducted without significant modification(s)? (Refer to the individual method(s) for a list of significant modifications).	N/A
E b.	APH and TO-15 Methods only: Was the complete analyte list reported for each method?	N/A
F	Were all applicable CAM protocol QC and performance standard non-conformances identified and evaluated in a laboratory narrative (including all "No" responses to Questions A through E)?	YES

A response to questions G, H and I is required for "Presumptive Certainty" status		
G	Were the reporting limits at or below all CAM reporting limits specified in the selected CAM protocol(s)?	NO
H	Were all QC performance standards specified in the CAM protocol(s) achieved?	NO
I	Were results reported for the complete analyte list specified in the selected CAM protocol(s)?	YES

For any questions answered "No", please refer to the case narrative section on the following page(s).

Please note that sample matrix information is located in the Sample Results section of this report.

Project Name: NBHS IRA
Project Number: 115058

Lab Number: L1403916
Report Date: 02/28/14

Case Narrative

The samples were received in accordance with the Chain of Custody and no significant deviations were encountered during the preparation or analysis unless otherwise noted. Sample Receipt, Container Information, and the Chain of Custody are located at the back of the report.

Results contained within this report relate only to the samples submitted under this Alpha Lab Number and meet all of the requirements of NELAC, for all NELAC accredited parameters. The data presented in this report is organized by parameter (i.e. VOC, SVOC, etc.). Sample specific Quality Control data (i.e. Surrogate Spike Recovery) is reported at the end of the target analyte list for each individual sample, followed by the Laboratory Batch Quality Control at the end of each parameter. If a sample was re-analyzed or re-extracted due to a required quality control corrective action and if both sets of data are reported, the Laboratory ID of the re-analysis or re-extraction is designated with an "R" or "RE", respectively. When multiple Batch Quality Control elements are reported (e.g. more than one LCS), the associated samples for each element are noted in the grey shaded header line of each data table. Any Laboratory Batch, Sample Specific % recovery or RPD value that is outside the listed Acceptance Criteria is bolded in the report. Performance criteria for CAM and RCP methods allow for some LCS compound failures to occur and still be within method compliance. In these instances, the specific failures are not narrated but are noted in the associated QC table. This information is also incorporated in the Data Usability format for our Data Merger tool where it can be reviewed along with any associated usability implications. Soil/sediments, solids and tissues are reported on a dry weight basis unless otherwise noted. Definitions of all data qualifiers and acronyms used in this report are provided in the Glossary located at the back of the report.

In reference to questions H (CAM) or 4 (RCP) when "NO" is checked, the performance criteria for CAM and RCP methods allow for some quality control failures to occur and still be within method compliance. In these instances the specific failure is not narrated but noted in the associated QC table. The information is also incorporated in the Data Usability format of our Data Merger tool where it can be reviewed along with any associated usability implications.

Please see the associated ADEx data file for a comparison of laboratory reporting limits that were achieved with the regulatory Numerical Standards requested on the Chain of Custody.

HOLD POLICY
For samples submitted on hold, Alpha's policy is to hold samples (with the exception of Air canisters) free of charge for 21 calendar days from the date the project is completed. After 21 calendar days, we will dispose of all samples submitted including those put on hold unless you have contacted your Client Service Representative and made arrangements for Alpha to continue to hold the samples. Air canisters will be disposed after 3 business days from the date the project is completed.

Please contact Client Services at 800-624-9220 with any questions.

Project Name: NBHS IRA **Lab Number:** L1403916
Project Number: 115058 **Report Date:** 02/28/14

Case Narrative (continued)

MCP Related Narratives

Sample Receipt

A Trip Blank was received in the laboratory but not listed on the Chain of Custody. The Trip Blank was not analyzed.

Volatile Organics

L1403916-09 and -12 were re-analyzed on dilution in order to quantify the samples within the calibration range. The results should be considered estimated, and are qualified with an E flag, for any compounds that exceeded the calibration range in the initial analysis. The re-analysis was performed only for the compounds that exceeded the calibration range.

In reference to question H:

The WG672308-1/-2 LCS/LCSD recoveries, associated with L1403916-01, -04, -06, and -09, are above the individual acceptance criteria for bromomethane (134%/132%), but within the overall method allowances. The results of the associated samples are reported; however, all positive detects are considered to have a potentially high bias for this compound.

The WG672308-4/-5 LCS/LCSD recoveries, associated with L1403916-09 and -12, are outside the individual acceptance criteria for three compounds, but within the overall method allowances. The results of the associated samples are reported; however, all results are considered to have a potentially high bias for acetone (LCSD at 133%) and 2-butanone (149%/152%) and a potentially low bias for 2,2-dichloropropane (69%/68%).

The initial calibration, associated with L1403916-01, -04, -06, -09, and -12, did not meet the method required minimum response factor on the lowest calibration standard for 1,4-dioxane (0.00231), as well as the average response factor for 1,4-dioxane.

The continuing calibration standards, associated with L1403916-01, -04, -06, -09, and -12, are outside the acceptance criteria for several compounds; however, they are within overall method allowances. Copies of the continuing calibration standards are included as addenda to this report.

PCBs

L1403916-04, -06, and -12 have elevated detection limits due to the dilutions required by the elevated

Project Name:	NBHS IRA	**Lab Number:**	L1403916
Project Number:	115058	**Report Date:**	02/28/14

Case Narrative (continued)

concentrations of target compounds in the samples.

In reference to question G:

L1403916-04, -06, and -12: The requested CAM reporting limits were not achieved for all compounds, with the exception of aroclor 1254.

I, the undersigned, attest under the pains and penalties of perjury that, to the best of my knowledge and belief and based upon my personal inquiry of those responsible for providing the information contained in this analytical report, such information is accurate and complete. This certificate of analysis is not complete unless this page accompanies any and all pages of this report.

Authorized Signature: Michelle M. Morris

Title: Technical Director/Representative

Date: 02/28/14

ORGANICS

VOLATILES

Project Name: NBHS IRA **Lab Number:** L1403916

Project Number: 115058 **Report Date:** 02/28/14

SAMPLE RESULTS

Lab ID:	L1403916-01	Date Collected:	02/21/14 09:50
Client ID:	MW-27R	Date Received:	02/21/14
Sample Location:	NBHS NEW BEDFORD	Field Prep:	Not Specified
Matrix:	Water		
Analytical Method:	97,8260C		
Analytical Date:	02/25/14 12:04		
Analyst:	MM		

Parameter	Result	Qualifier	Units	RL	MDL	Dilution Factor
MCP Volatile Organics - Westborough Lab						
Methylene chloride	ND		ug/l	2.0	--	1
1,1-Dichloroethane	ND		ug/l	1.0	--	1
Chloroform	ND		ug/l	1.0	--	1
Carbon tetrachloride	ND		ug/l	1.0	--	1
1,2-Dichloropropane	ND		ug/l	1.0	--	1
Dibromochloromethane	ND		ug/l	1.0	--	1
1,1,2-Trichloroethane	ND		ug/l	1.0	--	1
Tetrachloroethene	ND		ug/l	1.0	--	1
Chlorobenzene	ND		ug/l	1.0	--	1
Trichlorofluoromethane	ND		ug/l	2.0	--	1
1,2-Dichloroethane	ND		ug/l	1.0	--	1
1,1,1-Trichloroethane	ND		ug/l	1.0	--	1
Bromodichloromethane	ND		ug/l	1.0	--	1
trans-1,3-Dichloropropene	ND		ug/l	0.50	--	1
cis-1,3-Dichloropropene	ND		ug/l	0.50	--	1
1,1-Dichloropropene	ND		ug/l	2.0	--	1
Bromoform	ND		ug/l	2.0	--	1
1,1,2,2-Tetrachloroethane	ND		ug/l	1.0	--	1
Benzene	ND		ug/l	0.50	--	1
Toluene	ND		ug/l	1.0	--	1
Ethylbenzene	ND		ug/l	1.0	--	1
Chloromethane	ND		ug/l	2.0	--	1
Bromomethane	ND		ug/l	2.0	--	1
Vinyl chloride	ND		ug/l	1.0	--	1
Chloroethane	ND		ug/l	2.0	--	1
1,1-Dichloroethene	ND		ug/l	1.0	--	1
trans-1,2-Dichloroethene	ND		ug/l	1.0	--	1
Trichloroethene	7.6		ug/l	1.0	--	1
1,2-Dichlorobenzene	ND		ug/l	1.0	--	1
1,3-Dichlorobenzene	1.0		ug/l	1.0	--	1
1,4-Dichlorobenzene	4.4		ug/l	1.0	--	1

Project Name: NBHS IRA **Lab Number:** L1403916

Project Number: 115058 **Report Date:** 02/28/14

SAMPLE RESULTS

Lab ID: L1403916-01 Date Collected: 02/21/14 09:50

Client ID: MW-27R Date Received: 02/21/14

Sample Location: NBHS NEW BEDFORD Field Prep: Not Specified

Parameter	Result	Qualifier	Units	RL	MDL	Dilution Factor
MCP Volatile Organics - Westborough Lab						
Methyl tert butyl ether	ND		ug/l	2.0	--	1
p/m-Xylene	ND		ug/l	2.0	--	1
o-Xylene	ND		ug/l	1.0	--	1
cis-1,2-Dichloroethene	ND		ug/l	1.0	--	1
Dibromomethane	ND		ug/l	2.0	--	1
1,2,3-Trichloropropane	ND		ug/l	2.0	--	1
Styrene	ND		ug/l	1.0	--	1
Dichlorodifluoromethane	ND		ug/l	2.0	--	1
Acetone	ND		ug/l	5.0	--	1
Carbon disulfide	ND		ug/l	2.0	--	1
2-Butanone	ND		ug/l	5.0	--	1
4-Methyl-2-pentanone	ND		ug/l	5.0	--	1
2-Hexanone	ND		ug/l	5.0	--	1
Bromochloromethane	ND		ug/l	2.0	--	1
Tetrahydrofuran	ND		ug/l	2.0	--	1
2,2-Dichloropropane	ND		ug/l	2.0	--	1
1,2-Dibromoethane	ND		ug/l	2.0	--	1
1,3-Dichloropropane	ND		ug/l	2.0	--	1
1,1,1,2-Tetrachloroethane	ND		ug/l	1.0	--	1
Bromobenzene	ND		ug/l	2.0	--	1
n-Butylbenzene	ND		ug/l	2.0	--	1
sec-Butylbenzene	ND		ug/l	2.0	--	1
tert-Butylbenzene	ND		ug/l	2.0	--	1
o-Chlorotoluene	ND		ug/l	2.0	--	1
p-Chlorotoluene	ND		ug/l	2.0	--	1
1,2-Dibromo-3-chloropropane	ND		ug/l	2.0	--	1
Hexachlorobutadiene	ND		ug/l	0.60	--	1
Isopropylbenzene	ND		ug/l	2.0	--	1
p-Isopropyltoluene	ND		ug/l	2.0	--	1
Naphthalene	ND		ug/l	2.0	--	1
n-Propylbenzene	ND		ug/l	2.0	--	1
1,2,3-Trichlorobenzene	ND		ug/l	2.0	--	1
1,2,4-Trichlorobenzene	2.7		ug/l	2.0	--	1
1,3,5-Trimethylbenzene	ND		ug/l	2.0	--	1
1,2,4-Trimethylbenzene	ND		ug/l	2.0	--	1
Ethyl ether	ND		ug/l	2.0	--	1
Isopropyl Ether	ND		ug/l	2.0	--	1
Ethyl-Tert-Butyl-Ether	ND		ug/l	2.0	--	1
Tertiary-Amyl Methyl Ether	ND		ug/l	2.0	--	1

Project Name: NBHS IRA **Lab Number:** L1403916

Project Number: 115058 **Report Date:** 02/28/14

SAMPLE RESULTS

Lab ID:	L1403916-01	Date Collected:	02/21/14 09:50
Client ID:	MW-27R	Date Received:	02/21/14
Sample Location:	NBHS NEW BEDFORD	Field Prep:	Not Specified

Parameter	Result	Qualifier	Units	RL	MDL	Dilution Factor
MCP Volatile Organics - Westborough Lab						
1,4-Dioxane	ND		ug/l	250	--	1

Surrogate	% Recovery	Qualifier	Acceptance Criteria
1,2-Dichloroethane-d4	108		70-130
Toluene-d8	103		70-130
4-Bromofluorobenzene	101		70-130
Dibromofluoromethane	104		70-130

Project Name: NBHS IRA **Lab Number:** L1403916

Project Number: 115058 **Report Date:** 02/28/14

SAMPLE RESULTS

Lab ID:	L1403916-04	Date Collected:	02/21/14 10:40
Client ID:	MW-28	Date Received:	02/21/14
Sample Location:	NBHS NEW BEDFORD	Field Prep:	Not Specified
Matrix:	Water		
Analytical Method:	97,8260C		
Analytical Date:	02/25/14 12:36		
Analyst:	MM		

Parameter	Result	Qualifier	Units	RL	MDL	Dilution Factor
MCP Volatile Organics - Westborough Lab						
Methylene chloride	ND		ug/l	2.0	--	1
1,1-Dichloroethane	ND		ug/l	1.0	--	1
Chloroform	ND		ug/l	1.0	--	1
Carbon tetrachloride	ND		ug/l	1.0	--	1
1,2-Dichloropropane	ND		ug/l	1.0	--	1
Dibromochloromethane	ND		ug/l	1.0	--	1
1,1,2-Trichloroethane	ND		ug/l	1.0	--	1
Tetrachloroethene	ND		ug/l	1.0	--	1
Chlorobenzene	ND		ug/l	1.0	--	1
Trichlorofluoromethane	ND		ug/l	2.0	--	1
1,2-Dichloroethane	ND		ug/l	1.0	--	1
1,1,1-Trichloroethane	ND		ug/l	1.0	--	1
Bromodichloromethane	ND		ug/l	1.0	--	1
trans-1,3-Dichloropropene	ND		ug/l	0.50	--	1
cis-1,3-Dichloropropene	ND		ug/l	0.50	--	1
1,1-Dichloropropene	ND		ug/l	2.0	--	1
Bromoform	ND		ug/l	2.0	--	1
1,1,2,2-Tetrachloroethane	ND		ug/l	1.0	--	1
Benzene	ND		ug/l	0.50	--	1
Toluene	ND		ug/l	1.0	--	1
Ethylbenzene	ND		ug/l	1.0	--	1
Chloromethane	ND		ug/l	2.0	--	1
Bromomethane	ND		ug/l	2.0	--	1
Vinyl chloride	ND		ug/l	1.0	--	1
Chloroethane	ND		ug/l	2.0	--	1
1,1-Dichloroethene	ND		ug/l	1.0	--	1
trans-1,2-Dichloroethene	ND		ug/l	1.0	--	1
Trichloroethene	21		ug/l	1.0	--	1
1,2-Dichlorobenzene	ND		ug/l	1.0	--	1
1,3-Dichlorobenzene	ND		ug/l	1.0	--	1
1,4-Dichlorobenzene	2.8		ug/l	1.0	--	1

Project Name: NBHS IRA **Lab Number:** L1403916

Project Number: 115058 **Report Date:** 02/28/14

SAMPLE RESULTS

Lab ID: L1403916-04 Date Collected: 02/21/14 10:40

Client ID: MW-28 Date Received: 02/21/14

Sample Location: NBHS NEW BEDFORD Field Prep: Not Specified

Parameter	Result	Qualifier	Units	RL	MDL	Dilution Factor
MCP Volatile Organics - Westborough Lab						
Methyl tert butyl ether	ND		ug/l	2.0	--	1
p/m-Xylene	ND		ug/l	2.0	--	1
o-Xylene	ND		ug/l	1.0	--	1
cis-1,2-Dichloroethene	2.6		ug/l	1.0	--	1
Dibromomethane	ND		ug/l	2.0	--	1
1,2,3-Trichloropropane	ND		ug/l	2.0	--	1
Styrene	ND		ug/l	1.0	--	1
Dichlorodifluoromethane	ND		ug/l	2.0	--	1
Acetone	ND		ug/l	5.0	--	1
Carbon disulfide	ND		ug/l	2.0	--	1
2-Butanone	ND		ug/l	5.0	--	1
4-Methyl-2-pentanone	ND		ug/l	5.0	--	1
2-Hexanone	ND		ug/l	5.0	--	1
Bromochloromethane	ND		ug/l	2.0	--	1
Tetrahydrofuran	ND		ug/l	2.0	--	1
2,2-Dichloropropane	ND		ug/l	2.0	--	1
1,2-Dibromoethane	ND		ug/l	2.0	--	1
1,3-Dichloropropane	ND		ug/l	2.0	--	1
1,1,1,2-Tetrachloroethane	ND		ug/l	1.0	--	1
Bromobenzene	ND		ug/l	2.0	--	1
n-Butylbenzene	ND		ug/l	2.0	--	1
sec-Butylbenzene	ND		ug/l	2.0	--	1
tert-Butylbenzene	ND		ug/l	2.0	--	1
o-Chlorotoluene	ND		ug/l	2.0	--	1
p-Chlorotoluene	ND		ug/l	2.0	--	1
1,2-Dibromo-3-chloropropane	ND		ug/l	2.0	--	1
Hexachlorobutadiene	ND		ug/l	0.60	--	1
Isopropylbenzene	ND		ug/l	2.0	--	1
p-Isopropyltoluene	ND		ug/l	2.0	--	1
Naphthalene	ND		ug/l	2.0	--	1
n-Propylbenzene	ND		ug/l	2.0	--	1
1,2,3-Trichlorobenzene	ND		ug/l	2.0	--	1
1,2,4-Trichlorobenzene	ND		ug/l	2.0	--	1
1,3,5-Trimethylbenzene	ND		ug/l	2.0	--	1
1,2,4-Trimethylbenzene	ND		ug/l	2.0	--	1
Ethyl ether	ND		ug/l	2.0	--	1
Isopropyl Ether	ND		ug/l	2.0	--	1
Ethyl-Tert-Butyl-Ether	ND		ug/l	2.0	--	1
Tertiary-Amyl Methyl Ether	ND		ug/l	2.0	--	1

Project Name: NBHS IRA **Lab Number:** L1403916

Project Number: 115058 **Report Date:** 02/28/14

SAMPLE RESULTS

Lab ID:	L1403916-04	Date Collected:	02/21/14 10:40
Client ID:	MW-28	Date Received:	02/21/14
Sample Location:	NBHS NEW BEDFORD	Field Prep:	Not Specified

Parameter	Result	Qualifier	Units	RL	MDL	Dilution Factor
MCP Volatile Organics - Westborough Lab						
1,4-Dioxane	ND		ug/l	250	--	1

Surrogate	% Recovery	Qualifier	Acceptance Criteria
1,2-Dichloroethane-d4	107		70-130
Toluene-d8	100		70-130
4-Bromofluorobenzene	101		70-130
Dibromofluoromethane	103		70-130

Project Name: NBHS IRA **Lab Number:** L1403916

Project Number: 115058 **Report Date:** 02/28/14

SAMPLE RESULTS

Lab ID:	L1403916-06	Date Collected:	02/21/14 14:05
Client ID:	MW-41	Date Received:	02/21/14
Sample Location:	NBHS NEW BEDFORD	Field Prep:	Not Specified
Matrix:	Water		
Analytical Method:	97,8260C		
Analytical Date:	02/25/14 13:07		
Analyst:	MM		

Parameter	Result	Qualifier	Units	RL	MDL	Dilution Factor
MCP Volatile Organics - Westborough Lab						
Methylene chloride	ND		ug/l	2.0	--	1
1,1-Dichloroethane	ND		ug/l	1.0	--	1
Chloroform	ND		ug/l	1.0	--	1
Carbon tetrachloride	ND		ug/l	1.0	--	1
1,2-Dichloropropane	ND		ug/l	1.0	--	1
Dibromochloromethane	ND		ug/l	1.0	--	1
1,1,2-Trichloroethane	ND		ug/l	1.0	--	1
Tetrachloroethene	ND		ug/l	1.0	--	1
Chlorobenzene	ND		ug/l	1.0	--	1
Trichlorofluoromethane	ND		ug/l	2.0	--	1
1,2-Dichloroethane	ND		ug/l	1.0	--	1
1,1,1-Trichloroethane	ND		ug/l	1.0	--	1
Bromodichloromethane	ND		ug/l	1.0	--	1
trans-1,3-Dichloropropene	ND		ug/l	0.50	--	1
cis-1,3-Dichloropropene	ND		ug/l	0.50	--	1
1,1-Dichloropropene	ND		ug/l	2.0	--	1
Bromoform	ND		ug/l	2.0	--	1
1,1,2,2-Tetrachloroethane	ND		ug/l	1.0	--	1
Benzene	ND		ug/l	0.50	--	1
Toluene	ND		ug/l	1.0	--	1
Ethylbenzene	ND		ug/l	1.0	--	1
Chloromethane	ND		ug/l	2.0	--	1
Bromomethane	ND		ug/l	2.0	--	1
Vinyl chloride	4.5		ug/l	1.0	--	1
Chloroethane	ND		ug/l	2.0	--	1
1,1-Dichloroethene	ND		ug/l	1.0	--	1
trans-1,2-Dichloroethene	3.2		ug/l	1.0	--	1
Trichloroethene	6.6		ug/l	1.0	--	1
1,2-Dichlorobenzene	ND		ug/l	1.0	--	1
1,3-Dichlorobenzene	1.2		ug/l	1.0	--	1
1,4-Dichlorobenzene	1.2		ug/l	1.0	--	1

Project Name: NBHS IRA **Lab Number:** L1403916

Project Number: 115058 **Report Date:** 02/28/14

SAMPLE RESULTS

Lab ID: L1403916-06 Date Collected: 02/21/14 14:05

Client ID: MW-41 Date Received: 02/21/14

Sample Location: NBHS NEW BEDFORD Field Prep: Not Specified

Parameter	Result	Qualifier	Units	RL	MDL	Dilution Factor
MCP Volatile Organics - Westborough Lab						
Methyl tert butyl ether	ND		ug/l	2.0	--	1
p/m-Xylene	ND		ug/l	2.0	--	1
o-Xylene	ND		ug/l	1.0	--	1
cis-1,2-Dichloroethene	13		ug/l	1.0	--	1
Dibromomethane	ND		ug/l	2.0	--	1
1,2,3-Trichloropropane	ND		ug/l	2.0	--	1
Styrene	ND		ug/l	1.0	--	1
Dichlorodifluoromethane	ND		ug/l	2.0	--	1
Acetone	ND		ug/l	5.0	--	1
Carbon disulfide	ND		ug/l	2.0	--	1
2-Butanone	ND		ug/l	5.0	--	1
4-Methyl-2-pentanone	ND		ug/l	5.0	--	1
2-Hexanone	ND		ug/l	5.0	--	1
Bromochloromethane	ND		ug/l	2.0	--	1
Tetrahydrofuran	ND		ug/l	2.0	--	1
2,2-Dichloropropane	ND		ug/l	2.0	--	1
1,2-Dibromoethane	ND		ug/l	2.0	--	1
1,3-Dichloropropane	ND		ug/l	2.0	--	1
1,1,1,2-Tetrachloroethane	ND		ug/l	1.0	--	1
Bromobenzene	ND		ug/l	2.0	--	1
n-Butylbenzene	ND		ug/l	2.0	--	1
sec-Butylbenzene	ND		ug/l	2.0	--	1
tert-Butylbenzene	ND		ug/l	2.0	--	1
o-Chlorotoluene	ND		ug/l	2.0	--	1
p-Chlorotoluene	ND		ug/l	2.0	--	1
1,2-Dibromo-3-chloropropane	ND		ug/l	2.0	--	1
Hexachlorobutadiene	ND		ug/l	0.60	--	1
Isopropylbenzene	ND		ug/l	2.0	--	1
p-Isopropyltoluene	ND		ug/l	2.0	--	1
Naphthalene	ND		ug/l	2.0	--	1
n-Propylbenzene	ND		ug/l	2.0	--	1
1,2,3-Trichlorobenzene	ND		ug/l	2.0	--	1
1,2,4-Trichlorobenzene	5.0		ug/l	2.0	--	1
1,3,5-Trimethylbenzene	ND		ug/l	2.0	--	1
1,2,4-Trimethylbenzene	ND		ug/l	2.0	--	1
Ethyl ether	ND		ug/l	2.0	--	1
Isopropyl Ether	ND		ug/l	2.0	--	1
Ethyl-Tert-Butyl-Ether	ND		ug/l	2.0	--	1
Tertiary-Amyl Methyl Ether	ND		ug/l	2.0	--	1

Project Name: NBHS IRA **Lab Number:** L1403916

Project Number: 115058 **Report Date:** 02/28/14

SAMPLE RESULTS

Lab ID:	L1403916-06	Date Collected:	02/21/14 14:05
Client ID:	MW-41	Date Received:	02/21/14
Sample Location:	NBHS NEW BEDFORD	Field Prep:	Not Specified

Parameter	Result	Qualifier	Units	RL	MDL	Dilution Factor
MCP Volatile Organics - Westborough Lab						
1,4-Dioxane	ND		ug/l	250	--	1

Surrogate	% Recovery	Qualifier	Acceptance Criteria
1,2-Dichloroethane-d4	108		70-130
Toluene-d8	100		70-130
4-Bromofluorobenzene	100		70-130
Dibromofluoromethane	103		70-130

Project Name: NBHS IRA **Lab Number:** L1403916

Project Number: 115058 **Report Date:** 02/28/14

SAMPLE RESULTS

Lab ID:	L1403916-09	Date Collected:	02/21/14 14:40
Client ID:	MW-42R	Date Received:	02/21/14
Sample Location:	NBHS NEW BEDFORD	Field Prep:	Not Specified
Matrix:	Water		
Analytical Method:	97,8260C		
Analytical Date:	02/25/14 13:39		
Analyst:	MM		

Parameter	Result	Qualifier	Units	RL	MDL	Dilution Factor
MCP Volatile Organics - Westborough Lab						
Methylene chloride	ND		ug/l	2.0	--	1
1,1-Dichloroethane	ND		ug/l	1.0	--	1
Chloroform	ND		ug/l	1.0	--	1
Carbon tetrachloride	ND		ug/l	1.0	--	1
1,2-Dichloropropane	ND		ug/l	1.0	--	1
Dibromochloromethane	ND		ug/l	1.0	--	1
1,1,2-Trichloroethane	ND		ug/l	1.0	--	1
Tetrachloroethene	ND		ug/l	1.0	--	1
Chlorobenzene	ND		ug/l	1.0	--	1
Trichlorofluoromethane	ND		ug/l	2.0	--	1
1,2-Dichloroethane	ND		ug/l	1.0	--	1
1,1,1-Trichloroethane	ND		ug/l	1.0	--	1
Bromodichloromethane	ND		ug/l	1.0	--	1
trans-1,3-Dichloropropene	ND		ug/l	0.50	--	1
cis-1,3-Dichloropropene	ND		ug/l	0.50	--	1
1,1-Dichloropropene	ND		ug/l	2.0	--	1
Bromoform	ND		ug/l	2.0	--	1
1,1,2,2-Tetrachloroethane	ND		ug/l	1.0	--	1
Benzene	ND		ug/l	0.50	--	1
Toluene	ND		ug/l	1.0	--	1
Ethylbenzene	ND		ug/l	1.0	--	1
Chloromethane	ND		ug/l	2.0	--	1
Bromomethane	ND		ug/l	2.0	--	1
Vinyl chloride	110	E	ug/l	1.0	--	1
Chloroethane	ND		ug/l	2.0	--	1
1,1-Dichloroethene	ND		ug/l	1.0	--	1
trans-1,2-Dichloroethene	30		ug/l	1.0	--	1
Trichloroethene	4.0		ug/l	1.0	--	1
1,2-Dichlorobenzene	ND		ug/l	1.0	--	1
1,3-Dichlorobenzene	ND		ug/l	1.0	--	1
1,4-Dichlorobenzene	3.4		ug/l	1.0	--	1

Project Name: NBHS IRA **Lab Number:** L1403916

Project Number: 115058 **Report Date:** 02/28/14

SAMPLE RESULTS

Lab ID: L1403916-09 Date Collected: 02/21/14 14:40

Client ID: MW-42R Date Received: 02/21/14

Sample Location: NBHS NEW BEDFORD Field Prep: Not Specified

Parameter	Result	Qualifier	Units	RL	MDL	Dilution Factor
MCP Volatile Organics - Westborough Lab						
Methyl tert butyl ether	ND		ug/l	2.0	--	1
p/m-Xylene	ND		ug/l	2.0	--	1
o-Xylene	ND		ug/l	1.0	--	1
cis-1,2-Dichloroethene	48		ug/l	1.0	--	1
Dibromomethane	ND		ug/l	2.0	--	1
1,2,3-Trichloropropane	ND		ug/l	2.0	--	1
Styrene	ND		ug/l	1.0	--	1
Dichlorodifluoromethane	ND		ug/l	2.0	--	1
Acetone	ND		ug/l	5.0	--	1
Carbon disulfide	ND		ug/l	2.0	--	1
2-Butanone	ND		ug/l	5.0	--	1
4-Methyl-2-pentanone	ND		ug/l	5.0	--	1
2-Hexanone	ND		ug/l	5.0	--	1
Bromochloromethane	ND		ug/l	2.0	--	1
Tetrahydrofuran	ND		ug/l	2.0	--	1
2,2-Dichloropropane	ND		ug/l	2.0	--	1
1,2-Dibromoethane	ND		ug/l	2.0	--	1
1,3-Dichloropropane	ND		ug/l	2.0	--	1
1,1,1,2-Tetrachloroethane	ND		ug/l	1.0	--	1
Bromobenzene	ND		ug/l	2.0	--	1
n-Butylbenzene	ND		ug/l	2.0	--	1
sec-Butylbenzene	ND		ug/l	2.0	--	1
tert-Butylbenzene	ND		ug/l	2.0	--	1
o-Chlorotoluene	ND		ug/l	2.0	--	1
p-Chlorotoluene	ND		ug/l	2.0	--	1
1,2-Dibromo-3-chloropropane	ND		ug/l	2.0	--	1
Hexachlorobutadiene	ND		ug/l	0.60	--	1
Isopropylbenzene	ND		ug/l	2.0	--	1
p-Isopropyltoluene	ND		ug/l	2.0	--	1
Naphthalene	ND		ug/l	2.0	--	1
n-Propylbenzene	ND		ug/l	2.0	--	1
1,2,3-Trichlorobenzene	ND		ug/l	2.0	--	1
1,2,4-Trichlorobenzene	ND		ug/l	2.0	--	1
1,3,5-Trimethylbenzene	ND		ug/l	2.0	--	1
1,2,4-Trimethylbenzene	ND		ug/l	2.0	--	1
Ethyl ether	ND		ug/l	2.0	--	1
Isopropyl Ether	ND		ug/l	2.0	--	1
Ethyl-Tert-Butyl-Ether	ND		ug/l	2.0	--	1
Tertiary-Amyl Methyl Ether	ND		ug/l	2.0	--	1

Project Name: NBHS IRA **Lab Number:** L1403916

Project Number: 115058 **Report Date:** 02/28/14

SAMPLE RESULTS

Lab ID:	L1403916-09	Date Collected:	02/21/14 14:40
Client ID:	MW-42R	Date Received:	02/21/14
Sample Location:	NBHS NEW BEDFORD	Field Prep:	Not Specified

Parameter	Result	Qualifier	Units	RL	MDL	Dilution Factor
MCP Volatile Organics - Westborough Lab						
1,4-Dioxane	ND		ug/l	250	--	1

Surrogate	% Recovery	Qualifier	Acceptance Criteria
1,2-Dichloroethane-d4	107		70-130
Toluene-d8	101		70-130
4-Bromofluorobenzene	100		70-130
Dibromofluoromethane	103		70-130

Project Name: NBHS IRA **Lab Number:** L1403916

Project Number: 115058 **Report Date:** 02/28/14

SAMPLE RESULTS

Lab ID:	L1403916-09	D	Date Collected:	02/21/14 14:40
Client ID:	MW-42R		Date Received:	02/21/14
Sample Location:	NBHS NEW BEDFORD		Field Prep:	Not Specified
Matrix:	Water			
Analytical Method:	97,8260C			
Analytical Date:	02/26/14 09:45			
Analyst:	MM			

Parameter	Result	Qualifier	Units	RL	MDL	Dilution Factor
MCP Volatile Organics - Westborough Lab						
Vinyl chloride	110		ug/l	5.0	--	5

Surrogate	% Recovery	Qualifier	Acceptance Criteria
1,2-Dichloroethane-d4	109		70-130
Toluene-d8	100		70-130
4-Bromofluorobenzene	101		70-130
Dibromofluoromethane	104		70-130

Project Name: NBHS IRA **Lab Number:** L1403916

Project Number: 115058 **Report Date:** 02/28/14

SAMPLE RESULTS

Lab ID:	L1403916-12	Date Collected:	02/21/14 00:00
Client ID:	DUP-1	Date Received:	02/21/14
Sample Location:	NBHS NEW BEDFORD	Field Prep:	Not Specified
Matrix:	Water		
Analytical Method:	97,8260C		
Analytical Date:	02/26/14 09:13		
Analyst:	MM		

Parameter	Result	Qualifier	Units	RL	MDL	Dilution Factor
MCP Volatile Organics - Westborough Lab						
Methylene chloride	ND		ug/l	2.0	--	1
1,1-Dichloroethane	ND		ug/l	1.0	--	1
Chloroform	ND		ug/l	1.0	--	1
Carbon tetrachloride	ND		ug/l	1.0	--	1
1,2-Dichloropropane	ND		ug/l	1.0	--	1
Dibromochloromethane	ND		ug/l	1.0	--	1
1,1,2-Trichloroethane	ND		ug/l	1.0	--	1
Tetrachloroethene	ND		ug/l	1.0	--	1
Chlorobenzene	ND		ug/l	1.0	--	1
Trichlorofluoromethane	ND		ug/l	2.0	--	1
1,2-Dichloroethane	ND		ug/l	1.0	--	1
1,1,1-Trichloroethane	ND		ug/l	1.0	--	1
Bromodichloromethane	ND		ug/l	1.0	--	1
trans-1,3-Dichloropropene	ND		ug/l	0.50	--	1
cis-1,3-Dichloropropene	ND		ug/l	0.50	--	1
1,1-Dichloropropene	ND		ug/l	2.0	--	1
Bromoform	ND		ug/l	2.0	--	1
1,1,2,2-Tetrachloroethane	ND		ug/l	1.0	--	1
Benzene	ND		ug/l	0.50	--	1
Toluene	ND		ug/l	1.0	--	1
Ethylbenzene	ND		ug/l	1.0	--	1
Chloromethane	ND		ug/l	2.0	--	1
Bromomethane	ND		ug/l	2.0	--	1
Vinyl chloride	120	E	ug/l	1.0	--	1
Chloroethane	ND		ug/l	2.0	--	1
1,1-Dichloroethene	ND		ug/l	1.0	--	1
trans-1,2-Dichloroethene	32		ug/l	1.0	--	1
Trichloroethene	4.0		ug/l	1.0	--	1
1,2-Dichlorobenzene	ND		ug/l	1.0	--	1
1,3-Dichlorobenzene	ND		ug/l	1.0	--	1
1,4-Dichlorobenzene	3.6		ug/l	1.0	--	1

Project Name: NBHS IRA **Lab Number:** L1403916

Project Number: 115058 **Report Date:** 02/28/14

SAMPLE RESULTS

Lab ID: L1403916-12 Date Collected: 02/21/14 00:00

Client ID: DUP-1 Date Received: 02/21/14

Sample Location: NBHS NEW BEDFORD Field Prep: Not Specified

Parameter	Result	Qualifier	Units	RL	MDL	Dilution Factor
MCP Volatile Organics - Westborough Lab						
Methyl tert butyl ether	ND		ug/l	2.0	--	1
p/m-Xylene	ND		ug/l	2.0	--	1
o-Xylene	ND		ug/l	1.0	--	1
cis-1,2-Dichloroethene	49		ug/l	1.0	--	1
Dibromomethane	ND		ug/l	2.0	--	1
1,2,3-Trichloropropane	ND		ug/l	2.0	--	1
Styrene	ND		ug/l	1.0	--	1
Dichlorodifluoromethane	ND		ug/l	2.0	--	1
Acetone	ND		ug/l	5.0	--	1
Carbon disulfide	ND		ug/l	2.0	--	1
2-Butanone	ND		ug/l	5.0	--	1
4-Methyl-2-pentanone	ND		ug/l	5.0	--	1
2-Hexanone	ND		ug/l	5.0	--	1
Bromochloromethane	ND		ug/l	2.0	--	1
Tetrahydrofuran	ND		ug/l	2.0	--	1
2,2-Dichloropropane	ND		ug/l	2.0	--	1
1,2-Dibromoethane	ND		ug/l	2.0	--	1
1,3-Dichloropropane	ND		ug/l	2.0	--	1
1,1,1,2-Tetrachloroethane	ND		ug/l	1.0	--	1
Bromobenzene	ND		ug/l	2.0	--	1
n-Butylbenzene	ND		ug/l	2.0	--	1
sec-Butylbenzene	ND		ug/l	2.0	--	1
tert-Butylbenzene	ND		ug/l	2.0	--	1
o-Chlorotoluene	ND		ug/l	2.0	--	1
p-Chlorotoluene	ND		ug/l	2.0	--	1
1,2-Dibromo-3-chloropropane	ND		ug/l	2.0	--	1
Hexachlorobutadiene	ND		ug/l	0.60	--	1
Isopropylbenzene	ND		ug/l	2.0	--	1
p-Isopropyltoluene	ND		ug/l	2.0	--	1
Naphthalene	ND		ug/l	2.0	--	1
n-Propylbenzene	ND		ug/l	2.0	--	1
1,2,3-Trichlorobenzene	ND		ug/l	2.0	--	1
1,2,4-Trichlorobenzene	ND		ug/l	2.0	--	1
1,3,5-Trimethylbenzene	ND		ug/l	2.0	--	1
1,2,4-Trimethylbenzene	ND		ug/l	2.0	--	1
Ethyl ether	ND		ug/l	2.0	--	1
Isopropyl Ether	ND		ug/l	2.0	--	1
Ethyl-Tert-Butyl-Ether	ND		ug/l	2.0	--	1
Tertiary-Amyl Methyl Ether	ND		ug/l	2.0	--	1

Project Name: NBHS IRA **Lab Number:** L1403916

Project Number: 115058 **Report Date:** 02/28/14

SAMPLE RESULTS

Lab ID:	L1403916-12	Date Collected:	02/21/14 00:00
Client ID:	DUP-1	Date Received:	02/21/14
Sample Location:	NBHS NEW BEDFORD	Field Prep:	Not Specified

Parameter	Result	Qualifier	Units	RL	MDL	Dilution Factor
MCP Volatile Organics - Westborough Lab						
1,4-Dioxane	ND		ug/l	250	--	1

Surrogate	% Recovery	Qualifier	Acceptance Criteria
1,2-Dichloroethane-d4	110		70-130
Toluene-d8	99		70-130
4-Bromofluorobenzene	99		70-130
Dibromofluoromethane	103		70-130

Project Name: NBHS IRA **Lab Number:** L1403916

Project Number: 115058 **Report Date:** 02/28/14

SAMPLE RESULTS

Lab ID:	L1403916-12	D	Date Collected:	02/21/14 00:00
Client ID:	DUP-1		Date Received:	02/21/14
Sample Location:	NBHS NEW BEDFORD		Field Prep:	Not Specified
Matrix:	Water			
Analytical Method:	97,8260C			
Analytical Date:	02/27/14 09:34			
Analyst:	MM			

Parameter	Result	Qualifier	Units	RL	MDL	Dilution Factor
MCP Volatile Organics - Westborough Lab						
Vinyl chloride	97		ug/l	5.0	--	5

Surrogate	% Recovery	Qualifier	Acceptance Criteria
1,2-Dichloroethane-d4	109		70-130
Toluene-d8	100		70-130
4-Bromofluorobenzene	100		70-130
Dibromofluoromethane	105		70-130

Project Name: NBHS IRA **Lab Number:** L1403916

Project Number: 115058 **Report Date:** 02/28/14

Method Blank Analysis
Batch Quality Control

Analytical Method: 97,8260C
Analytical Date: 02/25/14 09:27
Analyst: MM

Parameter	Result	Qualifier	Units	RL	MDL
MCP Volatile Organics - Westborough Lab for sample(s): 01,04,06,09 Batch: WG672308-3					
Methylene chloride	ND		ug/l	2.0	--
1,1-Dichloroethane	ND		ug/l	1.0	--
Chloroform	ND		ug/l	1.0	--
Carbon tetrachloride	ND		ug/l	1.0	--
1,2-Dichloropropane	ND		ug/l	1.0	--
Dibromochloromethane	ND		ug/l	1.0	--
1,1,2-Trichloroethane	ND		ug/l	1.0	--
Tetrachloroethene	ND		ug/l	1.0	--
Chlorobenzene	ND		ug/l	1.0	--
Trichlorofluoromethane	ND		ug/l	2.0	--
1,2-Dichloroethane	ND		ug/l	1.0	--
1,1,1-Trichloroethane	ND		ug/l	1.0	--
Bromodichloromethane	ND		ug/l	1.0	--
trans-1,3-Dichloropropene	ND		ug/l	0.50	--
cis-1,3-Dichloropropene	ND		ug/l	0.50	--
1,1-Dichloropropene	ND		ug/l	2.0	--
Bromoform	ND		ug/l	2.0	--
1,1,2,2-Tetrachloroethane	ND		ug/l	1.0	--
Benzene	ND		ug/l	0.50	--
Toluene	ND		ug/l	1.0	--
Ethylbenzene	ND		ug/l	1.0	--
Chloromethane	ND		ug/l	2.0	--
Bromomethane	ND		ug/l	2.0	--
Vinyl chloride	ND		ug/l	1.0	--
Chloroethane	ND		ug/l	2.0	--
1,1-Dichloroethene	ND		ug/l	1.0	--
trans-1,2-Dichloroethene	ND		ug/l	1.0	--
Trichloroethene	ND		ug/l	1.0	--
1,2-Dichlorobenzene	ND		ug/l	1.0	--
1,3-Dichlorobenzene	ND		ug/l	1.0	--
1,4-Dichlorobenzene	ND		ug/l	1.0	--

Project Name: NBHS IRA **Lab Number:** L1403916

Project Number: 115058 **Report Date:** 02/28/14

Method Blank Analysis
Batch Quality Control

Analytical Method: 97,8260C
Analytical Date: 02/25/14 09:27
Analyst: MM

Parameter	Result	Qualifier	Units	RL	MDL
MCP Volatile Organics - Westborough Lab for sample(s): 01,04,06,09 Batch: WG672308-3					
Methyl tert butyl ether	ND		ug/l	2.0	--
p/m-Xylene	ND		ug/l	2.0	--
o-Xylene	ND		ug/l	1.0	--
cis-1,2-Dichloroethene	ND		ug/l	1.0	--
Dibromomethane	ND		ug/l	2.0	--
1,2,3-Trichloropropane	ND		ug/l	2.0	--
Styrene	ND		ug/l	1.0	--
Dichlorodifluoromethane	ND		ug/l	2.0	--
Acetone	ND		ug/l	5.0	--
Carbon disulfide	ND		ug/l	2.0	--
2-Butanone	ND		ug/l	5.0	--
4-Methyl-2-pentanone	ND		ug/l	5.0	--
2-Hexanone	ND		ug/l	5.0	--
Bromochloromethane	ND		ug/l	2.0	--
Tetrahydrofuran	ND		ug/l	2.0	--
2,2-Dichloropropane	ND		ug/l	2.0	--
1,2-Dibromoethane	ND		ug/l	2.0	--
1,3-Dichloropropane	ND		ug/l	2.0	--
1,1,1,2-Tetrachloroethane	ND		ug/l	1.0	--
Bromobenzene	ND		ug/l	2.0	--
n-Butylbenzene	ND		ug/l	2.0	--
sec-Butylbenzene	ND		ug/l	2.0	--
tert-Butylbenzene	ND		ug/l	2.0	--
o-Chlorotoluene	ND		ug/l	2.0	--
p-Chlorotoluene	ND		ug/l	2.0	--
1,2-Dibromo-3-chloropropane	ND		ug/l	2.0	--
Hexachlorobutadiene	ND		ug/l	0.60	--
Isopropylbenzene	ND		ug/l	2.0	--
p-Isopropyltoluene	ND		ug/l	2.0	--
Naphthalene	ND		ug/l	2.0	--
n-Propylbenzene	ND		ug/l	2.0	--

Project Name: NBHS IRA
Project Number: 115058

Lab Number: L1403916
Report Date: 02/28/14

Method Blank Analysis
Batch Quality Control

Analytical Method: 97,8260C
Analytical Date: 02/25/14 09:27
Analyst: MM

Parameter	Result	Qualifier	Units	RL	MDL
MCP Volatile Organics - Westborough Lab for sample(s): 01,04,06,09 Batch: WG672308-3					
1,2,3-Trichlorobenzene	ND		ug/l	2.0	--
1,2,4-Trichlorobenzene	ND		ug/l	2.0	--
1,3,5-Trimethylbenzene	ND		ug/l	2.0	--
1,2,4-Trimethylbenzene	ND		ug/l	2.0	--
Ethyl ether	ND		ug/l	2.0	--
Isopropyl Ether	ND		ug/l	2.0	--
Ethyl-Tert-Butyl-Ether	ND		ug/l	2.0	--
Tertiary-Amyl Methyl Ether	ND		ug/l	2.0	--
1,4-Dioxane	ND		ug/l	250	--

Surrogate	%Recovery	Qualifier	Acceptance Criteria
1,2-Dichloroethane-d4	109		70-130
Toluene-d8	100		70-130
4-Bromofluorobenzene	100		70-130
Dibromofluoromethane	103		70-130

Project Name: NBHS IRA
Project Number: 115058

Lab Number: L1403916
Report Date: 02/28/14

Method Blank Analysis
Batch Quality Control

Analytical Method: 97,8260C
Analytical Date: 02/26/14 08:42
Analyst: MM

Parameter	Result	Qualifier	Units	RL	MDL
MCP Volatile Organics - Westborough Lab for sample(s): 09,12 Batch: WG672308-6					
Methylene chloride	ND		ug/l	2.0	--
1,1-Dichloroethane	ND		ug/l	1.0	--
Chloroform	ND		ug/l	1.0	--
Carbon tetrachloride	ND		ug/l	1.0	--
1,2-Dichloropropane	ND		ug/l	1.0	--
Dibromochloromethane	ND		ug/l	1.0	--
1,1,2-Trichloroethane	ND		ug/l	1.0	--
Tetrachloroethene	ND		ug/l	1.0	--
Chlorobenzene	ND		ug/l	1.0	--
Trichlorofluoromethane	ND		ug/l	2.0	--
1,2-Dichloroethane	ND		ug/l	1.0	--
1,1,1-Trichloroethane	ND		ug/l	1.0	--
Bromodichloromethane	ND		ug/l	1.0	--
trans-1,3-Dichloropropene	ND		ug/l	0.50	--
cis-1,3-Dichloropropene	ND		ug/l	0.50	--
1,1-Dichloropropene	ND		ug/l	2.0	--
Bromoform	ND		ug/l	2.0	--
1,1,2,2-Tetrachloroethane	ND		ug/l	1.0	--
Benzene	ND		ug/l	0.50	--
Toluene	ND		ug/l	1.0	--
Ethylbenzene	ND		ug/l	1.0	--
Chloromethane	ND		ug/l	2.0	--
Bromomethane	ND		ug/l	2.0	--
Vinyl chloride	ND		ug/l	1.0	--
Chloroethane	ND		ug/l	2.0	--
1,1-Dichloroethene	ND		ug/l	1.0	--
trans-1,2-Dichloroethene	ND		ug/l	1.0	--
Trichloroethene	ND		ug/l	1.0	--
1,2-Dichlorobenzene	ND		ug/l	1.0	--
1,3-Dichlorobenzene	ND		ug/l	1.0	--
1,4-Dichlorobenzene	ND		ug/l	1.0	--

Project Name: NBHS IRA **Lab Number:** L1403916

Project Number: 115058 **Report Date:** 02/28/14

Method Blank Analysis
Batch Quality Control

Analytical Method: 97,8260C
Analytical Date: 02/26/14 08:42
Analyst: MM

Parameter	Result	Qualifier	Units	RL	MDL
MCP Volatile Organics - Westborough Lab for sample(s): 09,12 Batch: WG672308-6					
Methyl tert butyl ether	ND		ug/l	2.0	--
p/m-Xylene	ND		ug/l	2.0	--
o-Xylene	ND		ug/l	1.0	--
cis-1,2-Dichloroethene	ND		ug/l	1.0	--
Dibromomethane	ND		ug/l	2.0	--
1,2,3-Trichloropropane	ND		ug/l	2.0	--
Styrene	ND		ug/l	1.0	--
Dichlorodifluoromethane	ND		ug/l	2.0	--
Acetone	ND		ug/l	5.0	--
Carbon disulfide	ND		ug/l	2.0	--
2-Butanone	ND		ug/l	5.0	--
4-Methyl-2-pentanone	ND		ug/l	5.0	--
2-Hexanone	ND		ug/l	5.0	--
Bromochloromethane	ND		ug/l	2.0	--
Tetrahydrofuran	ND		ug/l	2.0	--
2,2-Dichloropropane	ND		ug/l	2.0	--
1,2-Dibromoethane	ND		ug/l	2.0	--
1,3-Dichloropropane	ND		ug/l	2.0	--
1,1,1,2-Tetrachloroethane	ND		ug/l	1.0	--
Bromobenzene	ND		ug/l	2.0	--
n-Butylbenzene	ND		ug/l	2.0	--
sec-Butylbenzene	ND		ug/l	2.0	--
tert-Butylbenzene	ND		ug/l	2.0	--
o-Chlorotoluene	ND		ug/l	2.0	--
p-Chlorotoluene	ND		ug/l	2.0	--
1,2-Dibromo-3-chloropropane	ND		ug/l	2.0	--
Hexachlorobutadiene	ND		ug/l	0.60	--
Isopropylbenzene	ND		ug/l	2.0	--
p-Isopropyltoluene	ND		ug/l	2.0	--
Naphthalene	ND		ug/l	2.0	--
n-Propylbenzene	ND		ug/l	2.0	--

Project Name: NBHS IRA
Project Number: 115058

Lab Number: L1403916
Report Date: 02/28/14

Method Blank Analysis
Batch Quality Control

Analytical Method: 97,8260C
Analytical Date: 02/26/14 08:42
Analyst: MM

Parameter	Result	Qualifier	Units	RL	MDL
MCP Volatile Organics - Westborough Lab for sample(s): 09,12 Batch: WG672308-6					
1,2,3-Trichlorobenzene	ND		ug/l	2.0	--
1,2,4-Trichlorobenzene	ND		ug/l	2.0	--
1,3,5-Trimethylbenzene	ND		ug/l	2.0	--
1,2,4-Trimethylbenzene	ND		ug/l	2.0	--
Ethyl ether	ND		ug/l	2.0	--
Isopropyl Ether	ND		ug/l	2.0	--
Ethyl-Tert-Butyl-Ether	ND		ug/l	2.0	--
Tertiary-Amyl Methyl Ether	ND		ug/l	2.0	--
1,4-Dioxane	ND		ug/l	250	--

Surrogate	%Recovery	Qualifier	Acceptance Criteria
1,2-Dichloroethane-d4	108		70-130
Toluene-d8	100		70-130
4-Bromofluorobenzene	100		70-130
Dibromofluoromethane	102		70-130

Project Name: NBHS IRA
Project Number: 115058

Lab Number: L1403916
Report Date: 02/28/14

Method Blank Analysis
Batch Quality Control

Analytical Method: 97,8260C
Analytical Date: 02/27/14 07:27
Analyst: MM

Parameter	Result	Qualifier	Units	RL	MDL
MCP Volatile Organics - Westborough Lab for sample(s): 12 Batch: WG672308-9					
Methylene chloride	ND		ug/l	2.0	--
1,1-Dichloroethane	ND		ug/l	1.0	--
Chloroform	ND		ug/l	1.0	--
Carbon tetrachloride	ND		ug/l	1.0	--
1,2-Dichloropropane	ND		ug/l	1.0	--
Dibromochloromethane	ND		ug/l	1.0	--
1,1,2-Trichloroethane	ND		ug/l	1.0	--
Tetrachloroethene	ND		ug/l	1.0	--
Chlorobenzene	ND		ug/l	1.0	--
Trichlorofluoromethane	ND		ug/l	2.0	--
1,2-Dichloroethane	ND		ug/l	1.0	--
1,1,1-Trichloroethane	ND		ug/l	1.0	--
Bromodichloromethane	ND		ug/l	1.0	--
trans-1,3-Dichloropropene	ND		ug/l	0.50	--
cis-1,3-Dichloropropene	ND		ug/l	0.50	--
1,1-Dichloropropene	ND		ug/l	2.0	--
Bromoform	ND		ug/l	2.0	--
1,1,2,2-Tetrachloroethane	ND		ug/l	1.0	--
Benzene	ND		ug/l	0.50	--
Toluene	ND		ug/l	1.0	--
Ethylbenzene	ND		ug/l	1.0	--
Chloromethane	ND		ug/l	2.0	--
Bromomethane	ND		ug/l	2.0	--
Vinyl chloride	ND		ug/l	1.0	--
Chloroethane	ND		ug/l	2.0	--
1,1-Dichloroethene	ND		ug/l	1.0	--
trans-1,2-Dichloroethene	ND		ug/l	1.0	--
Trichloroethene	ND		ug/l	1.0	--
1,2-Dichlorobenzene	ND		ug/l	1.0	--
1,3-Dichlorobenzene	ND		ug/l	1.0	--
1,4-Dichlorobenzene	ND		ug/l	1.0	--

Project Name: NBHS IRA
Project Number: 115058

Lab Number: L1403916
Report Date: 02/28/14

Method Blank Analysis
Batch Quality Control

Analytical Method: 97,8260C
Analytical Date: 02/27/14 07:27
Analyst: MM

Parameter	Result	Qualifier	Units	RL	MDL
MCP Volatile Organics - Westborough Lab for sample(s): 12 Batch: WG672308-9					
Methyl tert butyl ether	ND		ug/l	2.0	--
p/m-Xylene	ND		ug/l	2.0	--
o-Xylene	ND		ug/l	1.0	--
cis-1,2-Dichloroethene	ND		ug/l	1.0	--
Dibromomethane	ND		ug/l	2.0	--
1,2,3-Trichloropropane	ND		ug/l	2.0	--
Styrene	ND		ug/l	1.0	--
Dichlorodifluoromethane	ND		ug/l	2.0	--
Acetone	ND		ug/l	5.0	--
Carbon disulfide	ND		ug/l	2.0	--
2-Butanone	5.0		ug/l	5.0	--
4-Methyl-2-pentanone	ND		ug/l	5.0	--
2-Hexanone	ND		ug/l	5.0	--
Bromochloromethane	ND		ug/l	2.0	--
Tetrahydrofuran	ND		ug/l	2.0	--
2,2-Dichloropropane	ND		ug/l	2.0	--
1,2-Dibromoethane	ND		ug/l	2.0	--
1,3-Dichloropropane	ND		ug/l	2.0	--
1,1,1,2-Tetrachloroethane	ND		ug/l	1.0	--
Bromobenzene	ND		ug/l	2.0	--
n-Butylbenzene	ND		ug/l	2.0	--
sec-Butylbenzene	ND		ug/l	2.0	--
tert-Butylbenzene	ND		ug/l	2.0	--
o-Chlorotoluene	ND		ug/l	2.0	--
p-Chlorotoluene	ND		ug/l	2.0	--
1,2-Dibromo-3-chloropropane	ND		ug/l	2.0	--
Hexachlorobutadiene	ND		ug/l	0.60	--
Isopropylbenzene	ND		ug/l	2.0	--
p-Isopropyltoluene	ND		ug/l	2.0	--
Naphthalene	ND		ug/l	2.0	--
n-Propylbenzene	ND		ug/l	2.0	--

Project Name: NBHS IRA
Project Number: 115058

Lab Number: L1403916
Report Date: 02/28/14

Method Blank Analysis
Batch Quality Control

Analytical Method: 97,8260C
Analytical Date: 02/27/14 07:27
Analyst: MM

Parameter	Result	Qualifier	Units	RL	MDL
MCP Volatile Organics - Westborough Lab for sample(s): 12 Batch: WG672308-9					
1,2,3-Trichlorobenzene	ND		ug/l	2.0	--
1,2,4-Trichlorobenzene	ND		ug/l	2.0	--
1,3,5-Trimethylbenzene	ND		ug/l	2.0	--
1,2,4-Trimethylbenzene	ND		ug/l	2.0	--
Ethyl ether	ND		ug/l	2.0	--
Isopropyl Ether	ND		ug/l	2.0	--
Ethyl-Tert-Butyl-Ether	ND		ug/l	2.0	--
Tertiary-Amyl Methyl Ether	ND		ug/l	2.0	--
1,4-Dioxane	ND		ug/l	250	--

Surrogate	%Recovery	Qualifier	Acceptance Criteria
1,2-Dichloroethane-d4	110		70-130
Toluene-d8	98		70-130
4-Bromofluorobenzene	103		70-130
Dibromofluoromethane	104		70-130

Lab Control Sample Analysis
Batch Quality Control

Project Name: NBHS IRA
Project Number: 115058

Lab Number: L1403916
Report Date: 02/28/14

Parameter	LCS %Recovery	Qual	LCSD %Recovery	Qual	%Recovery Limits	RPD	Qual	RPD Limits
MCP Volatile Organics - Westborough Lab Associated sample(s): 01,04,06,09 Batch: WG672308-1 WG672308-2								
Methylene chloride	106		104		70-130	2		20
1,1-Dichloroethane	106		104		70-130	2		20
Chloroform	108		106		70-130	2		20
Carbon tetrachloride	91		91		70-130	0		20
1,2-Dichloropropane	104		101		70-130	3		20
Dibromochloromethane	95		93		70-130	2		20
1,1,2-Trichloroethane	106		101		70-130	5		20
Tetrachloroethene	102		100		70-130	2		20
Chlorobenzene	105		103		70-130	2		20
Trichlorofluoromethane	115		112		70-130	3		20
1,2-Dichloroethane	114		111		70-130	3		20
1,1,1-Trichloroethane	99		98		70-130	1		20
Bromodichloromethane	111		108		70-130	3		20
trans-1,3-Dichloropropene	85		83		70-130	2		20
cis-1,3-Dichloropropene	94		92		70-130	2		20
1,1-Dichloropropene	111		108		70-130	3		20
Bromoform	95		91		70-130	4		20
1,1,2,2-Tetrachloroethane	103		97		70-130	6		20
Benzene	106		103		70-130	3		20
Toluene	104		102		70-130	2		20
Ethylbenzene	107		106		70-130	1		20

Lab Control Sample Analysis
Batch Quality Control

Project Name: NBHS IRA
Project Number: 115058

Lab Number: L1403916
Report Date: 02/28/14

Parameter	LCS %Recovery	Qual	LCSD %Recovery	Qual	%Recovery Limits	RPD	Qual	RPD Limits
MCP Volatile Organics - Westborough Lab Associated sample(s): 01,04,06,09 Batch: WG672308-1 WG672308-2								
Chloromethane	94		89		70-130	5		20
Bromomethane	**134**	Q	**132**	Q	70-130	2		20
Vinyl chloride	110		107		70-130	3		20
Chloroethane	107		104		70-130	3		20
1,1-Dichloroethene	107		104		70-130	3		20
trans-1,2-Dichloroethene	106		104		70-130	2		20
Trichloroethene	106		104		70-130	2		20
1,2-Dichlorobenzene	104		101		70-130	3		20
1,3-Dichlorobenzene	104		101		70-130	3		20
1,4-Dichlorobenzene	104		100		70-130	4		20
Methyl tert butyl ether	102		96		70-130	6		20
p/m-Xylene	105		104		70-130	1		20
o-Xylene	105		104		70-130	1		20
cis-1,2-Dichloroethene	103		101		70-130	2		20
Dibromomethane	108		104		70-130	4		20
1,2,3-Trichloropropane	104		96		70-130	8		20
Styrene	106		105		70-130	1		20
Dichlorodifluoromethane	99		96		70-130	3		20
Acetone	121		117		70-130	3		20
Carbon disulfide	104		102		70-130	2		20
2-Butanone	103		98		70-130	5		20

Lab Control Sample Analysis
Batch Quality Control

Project Name: NBHS IRA
Project Number: 115058

Lab Number: L1403916
Report Date: 02/28/14

Parameter	LCS %Recovery	Qual	LCSD %Recovery	Qual	%Recovery Limits	RPD	Qual	RPD Limits
MCP Volatile Organics - Westborough Lab Associated sample(s): 01,04,06,09 Batch: WG672308-1 WG672308-2								
4-Methyl-2-pentanone	102		96		70-130	6		20
2-Hexanone	107		98		70-130	9		20
Bromochloromethane	106		103		70-130	3		20
Tetrahydrofuran	108		98		70-130	10		20
2,2-Dichloropropane	71		70		70-130	1		20
1,2-Dibromoethane	101		97		70-130	4		20
1,3-Dichloropropane	105		101		70-130	4		20
1,1,1,2-Tetrachloroethane	93		93		70-130	0		20
Bromobenzene	103		99		70-130	4		20
n-Butylbenzene	106		104		70-130	2		20
sec-Butylbenzene	105		104		70-130	1		20
tert-Butylbenzene	103		102		70-130	1		20
o-Chlorotoluene	105		103		70-130	2		20
p-Chlorotoluene	105		102		70-130	3		20
1,2-Dibromo-3-chloropropane	88		84		70-130	5		20
Hexachlorobutadiene	101		100		70-130	1		20
Isopropylbenzene	107		105		70-130	2		20
p-Isopropyltoluene	104		102		70-130	2		20
Naphthalene	100		93		70-130	7		20
n-Propylbenzene	106		103		70-130	3		20
1,2,3-Trichlorobenzene	101		96		70-130	5		20

Lab Control Sample Analysis
Batch Quality Control

Project Name: NBHS IRA
Project Number: 115058

Lab Number: L1403916
Report Date: 02/28/14

Parameter	LCS %Recovery	Qual	LCSD %Recovery	Qual	%Recovery Limits	RPD	Qual	RPD Limits
MCP Volatile Organics - Westborough Lab Associated sample(s): 01,04,06,09 Batch: WG672308-1 WG672308-2								
1,2,4-Trichlorobenzene	103		98		70-130	5		20
1,3,5-Trimethylbenzene	104		103		70-130	1		20
1,2,4-Trimethylbenzene	105		103		70-130	2		20
Ethyl ether	106		101		70-130	5		20
Isopropyl Ether	108		105		70-130	3		20
Ethyl-Tert-Butyl-Ether	87		84		70-130	4		20
Tertiary-Amyl Methyl Ether	93		88		70-130	6		20
1,4-Dioxane	96		87		70-130	10		20

Surrogate	LCS %Recovery	Qual	LCSD %Recovery	Qual	Acceptance Criteria
1,2-Dichloroethane-d4	109		109		70-130
Toluene-d8	100		101		70-130
4-Bromofluorobenzene	101		99		70-130
Dibromofluoromethane	105		104		70-130

Lab Control Sample Analysis
Batch Quality Control

Project Name: NBHS IRA
Project Number: 115058

Lab Number: L1403916
Report Date: 02/28/14

Parameter	LCS %Recovery	Qual	LCSD %Recovery	Qual	%Recovery Limits	RPD	Qual	RPD Limits
MCP Volatile Organics - Westborough Lab Associated sample(s): 09,12 Batch: WG672308-4 WG672308-5								
Methylene chloride	105		103		70-130	2		20
1,1-Dichloroethane	106		104		70-130	2		20
Chloroform	108		107		70-130	1		20
Carbon tetrachloride	93		93		70-130	0		20
1,2-Dichloropropane	103		102		70-130	1		20
Dibromochloromethane	96		97		70-130	1		20
1,1,2-Trichloroethane	102		103		70-130	1		20
Tetrachloroethene	101		101		70-130	0		20
Chlorobenzene	104		103		70-130	1		20
Trichlorofluoromethane	111		109		70-130	2		20
1,2-Dichloroethane	113		114		70-130	1		20
1,1,1-Trichloroethane	99		99		70-130	0		20
Bromodichloromethane	111		113		70-130	2		20
trans-1,3-Dichloropropene	82		83		70-130	1		20
cis-1,3-Dichloropropene	93		92		70-130	1		20
1,1-Dichloropropene	109		108		70-130	1		20
Bromoform	95		96		70-130	1		20
1,1,2,2-Tetrachloroethane	99		100		70-130	1		20
Benzene	104		103		70-130	1		20
Toluene	102		101		70-130	1		20
Ethylbenzene	106		106		70-130	0		20

Lab Control Sample Analysis
Batch Quality Control

Project Name: NBHS IRA
Project Number: 115058

Lab Number: L1403916
Report Date: 02/28/14

Parameter	LCS %Recovery	Qual	LCSD %Recovery	Qual	%Recovery Limits	RPD	Qual	RPD Limits
MCP Volatile Organics - Westborough Lab Associated sample(s): 09,12 Batch: WG672308-4 WG672308-5								
Chloromethane	88		87		70-130	1		20
Bromomethane	127		127		70-130	0		20
Vinyl chloride	104		102		70-130	2		20
Chloroethane	104		100		70-130	4		20
1,1-Dichloroethene	104		105		70-130	1		20
trans-1,2-Dichloroethene	105		105		70-130	0		20
Trichloroethene	107		105		70-130	2		20
1,2-Dichlorobenzene	103		102		70-130	1		20
1,3-Dichlorobenzene	105		103		70-130	2		20
1,4-Dichlorobenzene	103		102		70-130	1		20
Methyl tert butyl ether	97		98		70-130	1		20
p/m-Xylene	105		103		70-130	2		20
o-Xylene	105		103		70-130	2		20
cis-1,2-Dichloroethene	104		105		70-130	1		20
Dibromomethane	106		106		70-130	0		20
1,2,3-Trichloropropane	100		100		70-130	0		20
Styrene	105		104		70-130	1		20
Dichlorodifluoromethane	84		83		70-130	1		20
Acetone	127		**133**	Q	70-130	5		20
Carbon disulfide	101		100		70-130	1		20
2-Butanone	**149**	Q	**152**	Q	70-130	2		20

Lab Control Sample Analysis
Batch Quality Control

Project Name: NBHS IRA
Project Number: 115058

Lab Number: L1403916
Report Date: 02/28/14

Parameter	LCS %Recovery	Qual	LCSD %Recovery	Qual	%Recovery Limits	RPD	Qual	RPD Limits
MCP Volatile Organics - Westborough Lab Associated sample(s): 09,12 Batch: WG672308-4 WG672308-5								
4-Methyl-2-pentanone	98		99		70-130	1		20
2-Hexanone	107		109		70-130	2		20
Bromochloromethane	103		103		70-130	0		20
Tetrahydrofuran	99		101		70-130	2		20
2,2-Dichloropropane	**69**	Q	**68**	Q	70-130	1		20
1,2-Dibromoethane	99		98		70-130	1		20
1,3-Dichloropropane	102		101		70-130	1		20
1,1,1,2-Tetrachloroethane	95		94		70-130	1		20
Bromobenzene	102		102		70-130	0		20
n-Butylbenzene	108		106		70-130	2		20
sec-Butylbenzene	106		105		70-130	1		20
tert-Butylbenzene	106		104		70-130	2		20
o-Chlorotoluene	106		105		70-130	1		20
p-Chlorotoluene	105		104		70-130	1		20
1,2-Dibromo-3-chloropropane	87		88		70-130	1		20
Hexachlorobutadiene	103		101		70-130	2		20
Isopropylbenzene	106		105		70-130	1		20
p-Isopropyltoluene	106		105		70-130	1		20
Naphthalene	94		94		70-130	0		20
n-Propylbenzene	106		106		70-130	0		20
1,2,3-Trichlorobenzene	98		98		70-130	0		20

Lab Control Sample Analysis
Batch Quality Control

Project Name: NBHS IRA
Project Number: 115058

Lab Number: L1403916
Report Date: 02/28/14

Parameter	LCS %Recovery	Qual	LCSD %Recovery	Qual	%Recovery Limits	RPD	Qual	RPD Limits
MCP Volatile Organics - Westborough Lab Associated sample(s): 09,12 Batch: WG672308-4 WG672308-5								
1,2,4-Trichlorobenzene	100		100		70-130	0		20
1,3,5-Trimethylbenzene	106		105		70-130	1		20
1,2,4-Trimethylbenzene	106		104		70-130	2		20
Ethyl ether	102		102		70-130	0		20
Isopropyl Ether	106		105		70-130	1		20
Ethyl-Tert-Butyl-Ether	84		84		70-130	0		20
Tertiary-Amyl Methyl Ether	89		89		70-130	0		20
1,4-Dioxane	88		92		70-130	4		20

Surrogate	LCS %Recovery	Qual	LCSD %Recovery	Qual	Acceptance Criteria
1,2-Dichloroethane-d4	109		108		70-130
Toluene-d8	99		99		70-130
4-Bromofluorobenzene	100		99		70-130
Dibromofluoromethane	104		105		70-130

Lab Control Sample Analysis
Batch Quality Control

Project Name: NBHS IRA
Project Number: 115058

Lab Number: L1403916
Report Date: 02/28/14

Parameter	LCS %Recovery	Qual	LCSD %Recovery	Qual	%Recovery Limits	RPD	Qual	RPD Limits
MCP Volatile Organics - Westborough Lab Associated sample(s): 12 Batch: WG672308-7 WG672308-8								
Methylene chloride	97		98		70-130	1		20
1,1-Dichloroethane	98		98		70-130	0		20
Chloroform	101		102		70-130	1		20
Carbon tetrachloride	86		88		70-130	2		20
1,2-Dichloropropane	95		95		70-130	0		20
Dibromochloromethane	89		89		70-130	0		20
1,1,2-Trichloroethane	94		93		70-130	1		20
Tetrachloroethene	96		94		70-130	2		20
Chlorobenzene	97		96		70-130	1		20
Trichlorofluoromethane	104		106		70-130	2		20
1,2-Dichloroethane	107		106		70-130	1		20
1,1,1-Trichloroethane	93		93		70-130	0		20
Bromodichloromethane	103		105		70-130	2		20
trans-1,3-Dichloropropene	76		75		70-130	1		20
cis-1,3-Dichloropropene	85		86		70-130	1		20
1,1-Dichloropropene	102		101		70-130	1		20
Bromoform	90		88		70-130	2		20
1,1,2,2-Tetrachloroethane	90		90		70-130	0		20
Benzene	97		98		70-130	1		20
Toluene	95		94		70-130	1		20
Ethylbenzene	100		99		70-130	1		20

Lab Control Sample Analysis
Batch Quality Control

Project Name: NBHS IRA
Project Number: 115058

Lab Number: L1403916
Report Date: 02/28/14

Parameter	LCS %Recovery	Qual	LCSD %Recovery	Qual	%Recovery Limits	RPD	Qual	RPD Limits
MCP Volatile Organics - Westborough Lab Associated sample(s): 12 Batch: WG672308-7 WG672308-8								
Chloromethane	82		84		70-130	2		20
Bromomethane	119		120		70-130	1		20
Vinyl chloride	98		98		70-130	0		20
Chloroethane	96		95		70-130	1		20
1,1-Dichloroethene	96		96		70-130	0		20
trans-1,2-Dichloroethene	97		98		70-130	1		20
Trichloroethene	99		100		70-130	1		20
1,2-Dichlorobenzene	95		93		70-130	2		20
1,3-Dichlorobenzene	96		94		70-130	2		20
1,4-Dichlorobenzene	95		93		70-130	2		20
Methyl tert butyl ether	91		90		70-130	1		20
p/m-Xylene	98		97		70-130	1		20
o-Xylene	97		96		70-130	1		20
cis-1,2-Dichloroethene	97		99		70-130	2		20
Dibromomethane	98		100		70-130	2		20
1,2,3-Trichloropropane	91		90		70-130	1		20
Styrene	98		96		70-130	2		20
Dichlorodifluoromethane	83		84		70-130	1		20
Acetone	107		111		70-130	4		20
Carbon disulfide	94		95		70-130	1		20
2-Butanone	96		95		70-130	1		20

Lab Control Sample Analysis
Batch Quality Control

Project Name: NBHS IRA
Project Number: 115058

Lab Number: L1403916
Report Date: 02/28/14

Parameter	LCS %Recovery	Qual	LCSD %Recovery	Qual	%Recovery Limits	RPD	Qual	RPD Limits
MCP Volatile Organics - Westborough Lab Associated sample(s): 12 Batch: WG672308-7 WG672308-8								
4-Methyl-2-pentanone	90		90		70-130	0		20
2-Hexanone	94		92		70-130	2		20
Bromochloromethane	95		95		70-130	0		20
Tetrahydrofuran	95		96		70-130	1		20
2,2-Dichloropropane	**62**	Q	**65**	Q	70-130	5		20
1,2-Dibromoethane	92		89		70-130	3		20
1,3-Dichloropropane	95		92		70-130	3		20
1,1,1,2-Tetrachloroethane	87		87		70-130	0		20
Bromobenzene	94		92		70-130	2		20
n-Butylbenzene	103		102		70-130	1		20
sec-Butylbenzene	101		100		70-130	1		20
tert-Butylbenzene	99		98		70-130	1		20
o-Chlorotoluene	97		96		70-130	1		20
p-Chlorotoluene	97		95		70-130	2		20
1,2-Dibromo-3-chloropropane	78		78		70-130	0		20
Hexachlorobutadiene	101		101		70-130	0		20
Isopropylbenzene	100		100		70-130	0		20
p-Isopropyltoluene	101		99		70-130	2		20
Naphthalene	85		86		70-130	1		20
n-Propylbenzene	100		98		70-130	2		20
1,2,3-Trichlorobenzene	91		90		70-130	1		20

Lab Control Sample Analysis
Batch Quality Control

Project Name: NBHS IRA
Project Number: 115058

Lab Number: L1403916
Report Date: 02/28/14

Parameter	LCS %Recovery	Qual	LCSD %Recovery	Qual	%Recovery Limits	RPD	Qual	RPD Limits
MCP Volatile Organics - Westborough Lab Associated sample(s): 12 Batch: WG672308-7 WG672308-8								
1,2,4-Trichlorobenzene	92		93		70-130	1		20
1,3,5-Trimethylbenzene	99		98		70-130	1		20
1,2,4-Trimethylbenzene	98		97		70-130	1		20
Ethyl ether	95		94		70-130	1		20
Isopropyl Ether	98		98		70-130	0		20
Ethyl-Tert-Butyl-Ether	78		79		70-130	1		20
Tertiary-Amyl Methyl Ether	82		82		70-130	0		20
1,4-Dioxane	93		95		70-130	2		20

Surrogate	LCS %Recovery	Qual	LCSD %Recovery	Qual	Acceptance Criteria
1,2-Dichloroethane-d4	110		112		70-130
Toluene-d8	100		99		70-130
4-Bromofluorobenzene	99		97		70-130
Dibromofluoromethane	106		105		70-130

PCBS

Project Name: NBHS IRA
Project Number: 115058
Lab Number: L1403916
Report Date: 02/28/14

SAMPLE RESULTS

Lab ID:	L1403916-01	Date Collected:	02/21/14 09:50
Client ID:	MW-27R	Date Received:	02/21/14
Sample Location:	NBHS NEW BEDFORD	Field Prep:	Not Specified
Matrix:	Water	Extraction Method:	EPA 3510C
Analytical Method:	97,8082	Extraction Date:	02/23/14 13:43
Analytical Date:	02/24/14 22:24	Cleanup Method1:	EPA 3665A
Analyst:	KB	Cleanup Date1:	02/24/14
		Cleanup Method2:	EPA 3660B
		Cleanup Date2:	02/24/14

Parameter	Result	Qualifier	Units	RL	MDL	Dilution Factor	Column
MCP Polychlorinated Biphenyls - Westborough Lab							
Aroclor 1016	ND		ug/l	0.250	--	1	A
Aroclor 1221	ND		ug/l	0.250	--	1	A
Aroclor 1232	ND		ug/l	0.250	--	1	A
Aroclor 1242	ND		ug/l	0.250	--	1	A
Aroclor 1248	ND		ug/l	0.250	--	1	A
Aroclor 1254	5.26		ug/l	0.250	--	1	A
Aroclor 1260	ND		ug/l	0.250	--	1	A
Aroclor 1262	ND		ug/l	0.250	--	1	A
Aroclor 1268	ND		ug/l	0.250	--	1	A

Surrogate	% Recovery	Qualifier	Acceptance Criteria	Column
2,4,5,6-Tetrachloro-m-xylene	61		30-150	A
Decachlorobiphenyl	73		30-150	A
2,4,5,6-Tetrachloro-m-xylene	62		30-150	B
Decachlorobiphenyl	65		30-150	B

Project Name: NBHS IRA
Project Number: 115058
Lab Number: L1403916
Report Date: 02/28/14

SAMPLE RESULTS

Lab ID:	L1403916-02	Date Collected:	02/21/14 09:50
Client ID:	MW-27R (FIELD FILTERED 0.45)	Date Received:	02/21/14
Sample Location:	NBHS NEW BEDFORD	Field Prep:	Field Filtered
Matrix:	Water	Extraction Method:	EPA 3510C
Analytical Method:	97,8082	Extraction Date:	02/23/14 13:43
Analytical Date:	02/24/14 22:36	Cleanup Method1:	EPA 3665A
Analyst:	KB	Cleanup Date1:	02/24/14
		Cleanup Method2:	EPA 3660B
		Cleanup Date2:	02/24/14

Parameter	Result	Qualifier	Units	RL	MDL	Dilution Factor	Column
MCP Polychlorinated Biphenyls - Westborough Lab							
Aroclor 1016	ND		ug/l	0.250	--	1	A
Aroclor 1221	ND		ug/l	0.250	--	1	A
Aroclor 1232	ND		ug/l	0.250	--	1	A
Aroclor 1242	ND		ug/l	0.250	--	1	A
Aroclor 1248	ND		ug/l	0.250	--	1	A
Aroclor 1254	ND		ug/l	0.250	--	1	A
Aroclor 1260	ND		ug/l	0.250	--	1	A
Aroclor 1262	ND		ug/l	0.250	--	1	A
Aroclor 1268	ND		ug/l	0.250	--	1	A

Surrogate	% Recovery	Qualifier	Acceptance Criteria	Column
2,4,5,6-Tetrachloro-m-xylene	67		30-150	A
Decachlorobiphenyl	79		30-150	A
2,4,5,6-Tetrachloro-m-xylene	72		30-150	B
Decachlorobiphenyl	75		30-150	B

Project Name: NBHS IRA **Lab Number:** L1403916

Project Number: 115058 **Report Date:** 02/28/14

SAMPLE RESULTS

Lab ID:	L1403916-03	Date Collected:	02/21/14 09:50
Client ID:	MW-27R (FILTERED 0.2)	Date Received:	02/21/14
Sample Location:	NBHS NEW BEDFORD	Field Prep:	Not Specified
Matrix:	Water	Extraction Method:	EPA 3510C
Analytical Method:	97,8082	Extraction Date:	02/23/14 13:43
Analytical Date:	02/24/14 22:48	Cleanup Method1:	EPA 3665A
Analyst:	KB	Cleanup Date1:	02/24/14
		Cleanup Method2:	EPA 3660B
		Cleanup Date2:	02/24/14

Parameter	Result	Qualifier	Units	RL	MDL	Dilution Factor	Column
MCP Polychlorinated Biphenyls - Westborough Lab							
Aroclor 1016	ND		ug/l	0.250	--	1	A
Aroclor 1221	ND		ug/l	0.250	--	1	A
Aroclor 1232	ND		ug/l	0.250	--	1	A
Aroclor 1242	ND		ug/l	0.250	--	1	A
Aroclor 1248	ND		ug/l	0.250	--	1	A
Aroclor 1254	ND		ug/l	0.250	--	1	A
Aroclor 1260	ND		ug/l	0.250	--	1	A
Aroclor 1262	ND		ug/l	0.250	--	1	A
Aroclor 1268	ND		ug/l	0.250	--	1	A

Surrogate	% Recovery	Qualifier	Acceptance Criteria	Column
2,4,5,6-Tetrachloro-m-xylene	69		30-150	A
Decachlorobiphenyl	91		30-150	A
2,4,5,6-Tetrachloro-m-xylene	73		30-150	B
Decachlorobiphenyl	84		30-150	B

Project Name: NBHS IRA **Lab Number:** L1403916

Project Number: 115058 **Report Date:** 02/28/14

SAMPLE RESULTS

Lab ID:	L1403916-04 D	Date Collected:	02/21/14 10:40
Client ID:	MW-28	Date Received:	02/21/14
Sample Location:	NBHS NEW BEDFORD	Field Prep:	Not Specified
Matrix:	Water	Extraction Method:	EPA 3510C
Analytical Method:	97,8082	Extraction Date:	02/23/14 13:43
Analytical Date:	02/25/14 19:09	Cleanup Method1:	EPA 3665A
Analyst:	KB	Cleanup Date1:	02/24/14
		Cleanup Method2:	EPA 3660B
		Cleanup Date2:	02/24/14

Parameter	Result	Qualifier	Units	RL	MDL	Dilution Factor	Column
MCP Polychlorinated Biphenyls - Westborough Lab							
Aroclor 1016	ND		ug/l	1.25	--	5	A
Aroclor 1221	ND		ug/l	1.25	--	5	A
Aroclor 1232	ND		ug/l	1.25	--	5	A
Aroclor 1242	ND		ug/l	1.25	--	5	A
Aroclor 1248	ND		ug/l	1.25	--	5	A
Aroclor 1254	8.96		ug/l	1.25	--	5	A
Aroclor 1260	ND		ug/l	1.25	--	5	A
Aroclor 1262	ND		ug/l	1.25	--	5	A
Aroclor 1268	ND		ug/l	1.25	--	5	A

Surrogate	% Recovery	Qualifier	Acceptance Criteria	Column
2,4,5,6-Tetrachloro-m-xylene	61		30-150	A
Decachlorobiphenyl	82		30-150	A
2,4,5,6-Tetrachloro-m-xylene	57		30-150	B
Decachlorobiphenyl	70		30-150	B

Project Name: NBHS IRA
Project Number: 115058
Lab Number: L1403916
Report Date: 02/28/14

SAMPLE RESULTS

Lab ID:	L1403916-05	Date Collected:	02/21/14 10:40
Client ID:	MW-28 (FIELD FILTERED 0.45)	Date Received:	02/21/14
Sample Location:	NBHS NEW BEDFORD	Field Prep:	Field Filtered
Matrix:	Water	Extraction Method:	EPA 3510C
Analytical Method:	97,8082	Extraction Date:	02/23/14 13:43
Analytical Date:	02/24/14 23:13	Cleanup Method1:	EPA 3665A
Analyst:	KB	Cleanup Date1:	02/24/14
		Cleanup Method2:	EPA 3660B
		Cleanup Date2:	02/24/14

Parameter	Result	Qualifier	Units	RL	MDL	Dilution Factor	Column
MCP Polychlorinated Biphenyls - Westborough Lab							
Aroclor 1016	ND		ug/l	0.250	--	1	A
Aroclor 1221	ND		ug/l	0.250	--	1	A
Aroclor 1232	ND		ug/l	0.250	--	1	A
Aroclor 1242	ND		ug/l	0.250	--	1	A
Aroclor 1248	ND		ug/l	0.250	--	1	A
Aroclor 1254	ND		ug/l	0.250	--	1	A
Aroclor 1260	ND		ug/l	0.250	--	1	A
Aroclor 1262	ND		ug/l	0.250	--	1	A
Aroclor 1268	ND		ug/l	0.250	--	1	A

Surrogate	% Recovery	Qualifier	Acceptance Criteria	Column
2,4,5,6-Tetrachloro-m-xylene	67		30-150	A
Decachlorobiphenyl	85		30-150	A
2,4,5,6-Tetrachloro-m-xylene	73		30-150	B
Decachlorobiphenyl	80		30-150	B

Project Name: NBHS IRA **Lab Number:** L1403916

Project Number: 115058 **Report Date:** 02/28/14

SAMPLE RESULTS

Lab ID:	L1403916-06 D	Date Collected:	02/21/14 14:05
Client ID:	MW-41	Date Received:	02/21/14
Sample Location:	NBHS NEW BEDFORD	Field Prep:	Not Specified
Matrix:	Water	Extraction Method:	EPA 3510C
Analytical Method:	97,8082	Extraction Date:	02/23/14 13:43
Analytical Date:	02/25/14 19:21	Cleanup Method1:	EPA 3665A
Analyst:	KB	Cleanup Date1:	02/24/14
		Cleanup Method2:	EPA 3660B
		Cleanup Date2:	02/24/14

Parameter	Result	Qualifier	Units	RL	MDL	Dilution Factor	Column
MCP Polychlorinated Biphenyls - Westborough Lab							
Aroclor 1016	ND		ug/l	0.500	--	2	A
Aroclor 1221	ND		ug/l	0.500	--	2	A
Aroclor 1232	ND		ug/l	0.500	--	2	A
Aroclor 1242	ND		ug/l	0.500	--	2	A
Aroclor 1248	ND		ug/l	0.500	--	2	A
Aroclor 1254	5.27		ug/l	0.500	--	2	B
Aroclor 1260	ND		ug/l	0.500	--	2	A
Aroclor 1262	ND		ug/l	0.500	--	2	A
Aroclor 1268	ND		ug/l	0.500	--	2	A

Surrogate	% Recovery	Qualifier	Acceptance Criteria	Column
2,4,5,6-Tetrachloro-m-xylene	79		30-150	A
Decachlorobiphenyl	94		30-150	A
2,4,5,6-Tetrachloro-m-xylene	82		30-150	B
Decachlorobiphenyl	80		30-150	B

Project Name: NBHS IRA
Project Number: 115058
Lab Number: L1403916
Report Date: 02/28/14

SAMPLE RESULTS

Lab ID:	L1403916-07	Date Collected:	02/21/14 14:05
Client ID:	MW-41 (FIELD FILTERED 0.45)	Date Received:	02/21/14
Sample Location:	NBHS NEW BEDFORD	Field Prep:	Field Filtered
Matrix:	Water	Extraction Method:	EPA 3510C
Analytical Method:	97,8082	Extraction Date:	02/23/14 13:43
Analytical Date:	02/24/14 23:37	Cleanup Method1:	EPA 3665A
Analyst:	KB	Cleanup Date1:	02/24/14
		Cleanup Method2:	EPA 3660B
		Cleanup Date2:	02/24/14

Parameter	Result	Qualifier	Units	RL	MDL	Dilution Factor	Column
MCP Polychlorinated Biphenyls - Westborough Lab							
Aroclor 1016	ND		ug/l	0.250	--	1	A
Aroclor 1221	ND		ug/l	0.250	--	1	A
Aroclor 1232	ND		ug/l	0.250	--	1	A
Aroclor 1242	ND		ug/l	0.250	--	1	A
Aroclor 1248	ND		ug/l	0.250	--	1	A
Aroclor 1254	ND		ug/l	0.250	--	1	A
Aroclor 1260	ND		ug/l	0.250	--	1	A
Aroclor 1262	ND		ug/l	0.250	--	1	A
Aroclor 1268	ND		ug/l	0.250	--	1	A

Surrogate	% Recovery	Qualifier	Acceptance Criteria	Column
2,4,5,6-Tetrachloro-m-xylene	57		30-150	A
Decachlorobiphenyl	76		30-150	A
2,4,5,6-Tetrachloro-m-xylene	63		30-150	B
Decachlorobiphenyl	72		30-150	B

Project Name: NBHS IRA
Project Number: 115058
Lab Number: L1403916
Report Date: 02/28/14

SAMPLE RESULTS

Lab ID:	L1403916-08	Date Collected:	02/21/14 14:05
Client ID:	MW-41 (FILTERED 0.2)	Date Received:	02/21/14
Sample Location:	NBHS NEW BEDFORD	Field Prep:	Not Specified
Matrix:	Water	Extraction Method:	EPA 3510C
Analytical Method:	97,8082	Extraction Date:	02/23/14 13:43
Analytical Date:	02/24/14 23:50	Cleanup Method1:	EPA 3665A
Analyst:	KB	Cleanup Date1:	02/24/14
		Cleanup Method2:	EPA 3660B
		Cleanup Date2:	02/24/14

Parameter	Result	Qualifier	Units	RL	MDL	Dilution Factor	Column
MCP Polychlorinated Biphenyls - Westborough Lab							
Aroclor 1016	ND		ug/l	0.250	--	1	A
Aroclor 1221	ND		ug/l	0.250	--	1	A
Aroclor 1232	ND		ug/l	0.250	--	1	A
Aroclor 1242	ND		ug/l	0.250	--	1	A
Aroclor 1248	ND		ug/l	0.250	--	1	A
Aroclor 1254	ND		ug/l	0.250	--	1	A
Aroclor 1260	ND		ug/l	0.250	--	1	A
Aroclor 1262	ND		ug/l	0.250	--	1	A
Aroclor 1268	ND		ug/l	0.250	--	1	A

Surrogate	% Recovery	Qualifier	Acceptance Criteria	Column
2,4,5,6-Tetrachloro-m-xylene	79		30-150	A
Decachlorobiphenyl	96		30-150	A
2,4,5,6-Tetrachloro-m-xylene	82		30-150	B
Decachlorobiphenyl	88		30-150	B

Project Name: NBHS IRA
Project Number: 115058
Lab Number: L1403916
Report Date: 02/28/14

SAMPLE RESULTS

Lab ID:	L1403916-09	Date Collected:	02/21/14 14:40
Client ID:	MW-42R	Date Received:	02/21/14
Sample Location:	NBHS NEW BEDFORD	Field Prep:	Not Specified
Matrix:	Water	Extraction Method:	EPA 3510C
Analytical Method:	97,8082	Extraction Date:	02/23/14 13:43
Analytical Date:	02/25/14 00:02	Cleanup Method1:	EPA 3665A
Analyst:	KB	Cleanup Date1:	02/24/14
		Cleanup Method2:	EPA 3660B
		Cleanup Date2:	02/24/14

Parameter	Result	Qualifier	Units	RL	MDL	Dilution Factor	Column
MCP Polychlorinated Biphenyls - Westborough Lab							
Aroclor 1016	ND		ug/l	0.250	--	1	A
Aroclor 1221	ND		ug/l	0.250	--	1	A
Aroclor 1232	ND		ug/l	0.250	--	1	A
Aroclor 1242	ND		ug/l	0.250	--	1	A
Aroclor 1248	ND		ug/l	0.250	--	1	A
Aroclor 1254	5.29		ug/l	0.250	--	1	B
Aroclor 1260	ND		ug/l	0.250	--	1	A
Aroclor 1262	ND		ug/l	0.250	--	1	A
Aroclor 1268	ND		ug/l	0.250	--	1	A

Surrogate	% Recovery	Qualifier	Acceptance Criteria	Column
2,4,5,6-Tetrachloro-m-xylene	67		30-150	A
Decachlorobiphenyl	79		30-150	A
2,4,5,6-Tetrachloro-m-xylene	73		30-150	B
Decachlorobiphenyl	72		30-150	B

Project Name: NBHS IRA
Project Number: 115058
Lab Number: L1403916
Report Date: 02/28/14

SAMPLE RESULTS

Lab ID:	L1403916-10	Date Collected:	02/21/14 14:40
Client ID:	MW-42R (FIELD FILTERED 0.45)	Date Received:	02/21/14
Sample Location:	NBHS NEW BEDFORD	Field Prep:	Field Filtered
Matrix:	Water	Extraction Method:	EPA 3510C
Analytical Method:	97,8082	Extraction Date:	02/23/14 13:43
Analytical Date:	02/25/14 00:14	Cleanup Method1:	EPA 3665A
Analyst:	KB	Cleanup Date1:	02/24/14
		Cleanup Method2:	EPA 3660B
		Cleanup Date2:	02/24/14

Parameter	Result	Qualifier	Units	RL	MDL	Dilution Factor	Column
MCP Polychlorinated Biphenyls - Westborough Lab							
Aroclor 1016	ND		ug/l	0.250	--	1	A
Aroclor 1221	ND		ug/l	0.250	--	1	A
Aroclor 1232	ND		ug/l	0.250	--	1	A
Aroclor 1242	ND		ug/l	0.250	--	1	A
Aroclor 1248	ND		ug/l	0.250	--	1	A
Aroclor 1254	ND		ug/l	0.250	--	1	A
Aroclor 1260	ND		ug/l	0.250	--	1	A
Aroclor 1262	ND		ug/l	0.250	--	1	A
Aroclor 1268	ND		ug/l	0.250	--	1	A

Surrogate	% Recovery	Qualifier	Acceptance Criteria	Column
2,4,5,6-Tetrachloro-m-xylene	69		30-150	A
Decachlorobiphenyl	84		30-150	A
2,4,5,6-Tetrachloro-m-xylene	74		30-150	B
Decachlorobiphenyl	80		30-150	B

Project Name: NBHS IRA
Project Number: 115058
Lab Number: L1403916
Report Date: 02/28/14

SAMPLE RESULTS

Lab ID:	L1403916-11	Date Collected:	02/21/14 14:40
Client ID:	MW-42R (FILTERED 0.2)	Date Received:	02/21/14
Sample Location:	NBHS NEW BEDFORD	Field Prep:	Not Specified
Matrix:	Water	Extraction Method:	EPA 3510C
Analytical Method:	97,8082	Extraction Date:	02/23/14 13:43
Analytical Date:	02/25/14 00:27	Cleanup Method1:	EPA 3665A
Analyst:	KB	Cleanup Date1:	02/24/14
		Cleanup Method2:	EPA 3660B
		Cleanup Date2:	02/24/14

Parameter	Result	Qualifier	Units	RL	MDL	Dilution Factor	Column
MCP Polychlorinated Biphenyls - Westborough Lab							
Aroclor 1016	ND		ug/l	0.250	--	1	A
Aroclor 1221	ND		ug/l	0.250	--	1	A
Aroclor 1232	ND		ug/l	0.250	--	1	A
Aroclor 1242	ND		ug/l	0.250	--	1	A
Aroclor 1248	ND		ug/l	0.250	--	1	A
Aroclor 1254	ND		ug/l	0.250	--	1	A
Aroclor 1260	ND		ug/l	0.250	--	1	A
Aroclor 1262	ND		ug/l	0.250	--	1	A
Aroclor 1268	ND		ug/l	0.250	--	1	A

Surrogate	% Recovery	Qualifier	Acceptance Criteria	Column
2,4,5,6-Tetrachloro-m-xylene	69		30-150	A
Decachlorobiphenyl	85		30-150	A
2,4,5,6-Tetrachloro-m-xylene	75		30-150	B
Decachlorobiphenyl	80		30-150	B

Project Name: NBHS IRA **Lab Number:** L1403916

Project Number: 115058 **Report Date:** 02/28/14

SAMPLE RESULTS

Lab ID:	L1403916-12 D	Date Collected:	02/21/14 00:00
Client ID:	DUP-1	Date Received:	02/21/14
Sample Location:	NBHS NEW BEDFORD	Field Prep:	Not Specified
Matrix:	Water	Extraction Method:	EPA 3510C
Analytical Method:	97,8082	Extraction Date:	02/23/14 13:44
Analytical Date:	02/25/14 19:34	Cleanup Method1:	EPA 3665A
Analyst:	KB	Cleanup Date1:	02/24/14
		Cleanup Method2:	EPA 3660B
		Cleanup Date2:	02/24/14

Parameter	Result	Qualifier	Units	RL	MDL	Dilution Factor	Column
MCP Polychlorinated Biphenyls - Westborough Lab							
Aroclor 1016	ND		ug/l	0.500	--	2	A
Aroclor 1221	ND		ug/l	0.500	--	2	A
Aroclor 1232	ND		ug/l	0.500	--	2	A
Aroclor 1242	ND		ug/l	0.500	--	2	A
Aroclor 1248	ND		ug/l	0.500	--	2	A
Aroclor 1254	6.34		ug/l	0.500	--	2	B
Aroclor 1260	ND		ug/l	0.500	--	2	A
Aroclor 1262	ND		ug/l	0.500	--	2	A
Aroclor 1268	ND		ug/l	0.500	--	2	A

Surrogate	% Recovery	Qualifier	Acceptance Criteria	Column
2,4,5,6-Tetrachloro-m-xylene	74		30-150	A
Decachlorobiphenyl	91		30-150	A
2,4,5,6-Tetrachloro-m-xylene	77		30-150	B
Decachlorobiphenyl	78		30-150	B

Project Name: NBHS IRA
Project Number: 115058
Lab Number: L1403916
Report Date: 02/28/14

SAMPLE RESULTS

Lab ID:	L1403916-13	Date Collected:	02/21/14 00:00
Client ID:	DUP-1 (FIELD FILTERED 0.45)	Date Received:	02/21/14
Sample Location:	NBHS NEW BEDFORD	Field Prep:	Field Filtered
Matrix:	Water	Extraction Method:	EPA 3510C
Analytical Method:	97,8082	Extraction Date:	02/23/14 13:44
Analytical Date:	02/25/14 00:51	Cleanup Method1:	EPA 3665A
Analyst:	KB	Cleanup Date1:	02/24/14
		Cleanup Method2:	EPA 3660B
		Cleanup Date2:	02/24/14

Parameter	Result	Qualifier	Units	RL	MDL	Dilution Factor	Column
MCP Polychlorinated Biphenyls - Westborough Lab							
Aroclor 1016	ND		ug/l	0.250	--	1	A
Aroclor 1221	ND		ug/l	0.250	--	1	A
Aroclor 1232	ND		ug/l	0.250	--	1	A
Aroclor 1242	ND		ug/l	0.250	--	1	A
Aroclor 1248	ND		ug/l	0.250	--	1	A
Aroclor 1254	ND		ug/l	0.250	--	1	A
Aroclor 1260	ND		ug/l	0.250	--	1	A
Aroclor 1262	ND		ug/l	0.250	--	1	A
Aroclor 1268	ND		ug/l	0.250	--	1	A

Surrogate	% Recovery	Qualifier	Acceptance Criteria	Column
2,4,5,6-Tetrachloro-m-xylene	74		30-150	A
Decachlorobiphenyl	89		30-150	A
2,4,5,6-Tetrachloro-m-xylene	80		30-150	B
Decachlorobiphenyl	85		30-150	B

Project Name: NBHS IRA
Project Number: 115058
Lab Number: L1403916
Report Date: 02/28/14

SAMPLE RESULTS

Lab ID:	L1403916-14	Date Collected:	02/21/14 00:00
Client ID:	DUP-1 (FILTERED 0.2)	Date Received:	02/21/14
Sample Location:	NBHS NEW BEDFORD	Field Prep:	Not Specified
Matrix:	Water	Extraction Method:	EPA 3510C
Analytical Method:	97,8082	Extraction Date:	02/23/14 13:44
Analytical Date:	02/25/14 01:03	Cleanup Method1:	EPA 3665A
Analyst:	KB	Cleanup Date1:	02/24/14
		Cleanup Method2:	EPA 3660B
		Cleanup Date2:	02/24/14

Parameter	Result	Qualifier	Units	RL	MDL	Dilution Factor	Column
MCP Polychlorinated Biphenyls - Westborough Lab							
Aroclor 1016	ND		ug/l	0.250	--	1	A
Aroclor 1221	ND		ug/l	0.250	--	1	A
Aroclor 1232	ND		ug/l	0.250	--	1	A
Aroclor 1242	ND		ug/l	0.250	--	1	A
Aroclor 1248	ND		ug/l	0.250	--	1	A
Aroclor 1254	ND		ug/l	0.250	--	1	A
Aroclor 1260	ND		ug/l	0.250	--	1	A
Aroclor 1262	ND		ug/l	0.250	--	1	A
Aroclor 1268	ND		ug/l	0.250	--	1	A

Surrogate	% Recovery	Qualifier	Acceptance Criteria	Column
2,4,5,6-Tetrachloro-m-xylene	68		30-150	A
Decachlorobiphenyl	80		30-150	A
2,4,5,6-Tetrachloro-m-xylene	73		30-150	B
Decachlorobiphenyl	75		30-150	B

Project Name: NBHS IRA

Project Number: 115058

Lab Number: L1403916

Report Date: 02/28/14

Method Blank Analysis
Batch Quality Control

Analytical Method: 97,8082
Analytical Date: 02/24/14 21:35
Analyst: KB

Extraction Method: EPA 3510C
Extraction Date: 02/23/14 13:43
Cleanup Method1: EPA 3665A
Cleanup Date1: 02/24/14
Cleanup Method2: EPA 3660B
Cleanup Date2: 02/24/14

Parameter	Result	Qualifier	Units	RL	MDL	Column
MCP Polychlorinated Biphenyls - Westborough Lab for sample(s): 01-14 Batch: WG671810-1						
Aroclor 1016	ND		ug/l	0.250	--	A
Aroclor 1221	ND		ug/l	0.250	--	A
Aroclor 1232	ND		ug/l	0.250	--	A
Aroclor 1242	ND		ug/l	0.250	--	A
Aroclor 1248	ND		ug/l	0.250	--	A
Aroclor 1254	ND		ug/l	0.250	--	A
Aroclor 1260	ND		ug/l	0.250	--	A
Aroclor 1262	ND		ug/l	0.250	--	A
Aroclor 1268	ND		ug/l	0.250	--	A

Surrogate	%Recovery	Qualifier	Acceptance Criteria	Column
2,4,5,6-Tetrachloro-m-xylene	42		30-150	A
Decachlorobiphenyl	76		30-150	A
2,4,5,6-Tetrachloro-m-xylene	46		30-150	B
Decachlorobiphenyl	73		30-150	B

Lab Control Sample Analysis
Batch Quality Control

Project Name: NBHS IRA
Project Number: 115058

Lab Number: L1403916
Report Date: 02/28/14

Parameter	LCS %Recovery	Qual	LCSD %Recovery	Qual	%Recovery Limits	RPD	Qual	RPD Limits	Column
MCP Polychlorinated Biphenyls - Westborough Lab Associated sample(s): 01-14 Batch: WG671810-2 WG671810-3									
Aroclor 1016	81		76		40-140	6		20	A
Aroclor 1260	91		81		40-140	12		20	A

Surrogate	LCS %Recovery	Qual	LCSD %Recovery	Qual	Acceptance Criteria	Column
2,4,5,6-Tetrachloro-m-xylene	60		54		30-150	A
Decachlorobiphenyl	91		78		30-150	A
2,4,5,6-Tetrachloro-m-xylene	63		59		30-150	B
Decachlorobiphenyl	87		73		30-150	B

Project Name: NBHS IRA
Project Number: 115058

Lab Number: L1403916
Report Date: 02/28/14

Sample Receipt and Container Information

Were project specific reporting limits specified? YES

Reagent H2O Preserved Vials Frozen on: NA

Cooler Information Custody Seal

Cooler	
A	Absent
B	Absent
C	Absent

Container Information

Container ID	Container Type	Cooler	pH	Temp deg C	Pres	Seal	Analysis(*)
L1403916-01A	Vial HCl preserved	C	N/A	3.0	Y	Absent	MCP-8260-10(14)
L1403916-01B	Vial HCl preserved	C	N/A	3.0	Y	Absent	MCP-8260-10(14)
L1403916-01C	Vial HCl preserved	C	N/A	3.0	Y	Absent	MCP-8260-10(14)
L1403916-01D	Amber 1000ml unpreserved	C	7	3.0	Y	Absent	MCP-8082-10(365)
L1403916-01E	Amber 1000ml unpreserved	C	7	3.0	Y	Absent	MCP-8082-10(365)
L1403916-02A	Amber 1000ml unpreserved	C	7	3.0	Y	Absent	MCP-8082-10(365)
L1403916-02B	Amber 1000ml unpreserved	C	7	3.0	Y	Absent	MCP-8082-10(365)
L1403916-03A	Amber 1000ml unpreserved	C	7	3.0	Y	Absent	FILTER-EXT(1)
L1403916-03B	Amber 1000ml unpreserved	C	7	3.0	Y	Absent	FILTER-EXT(1)
L1403916-03X	Amber 1000ml unpreserved split	C	7	3.0	Y	Absent	MCP-8082-10(365)
L1403916-03Y	Amber 1000ml unpreserved split	C	7	3.0	Y	Absent	MCP-8082-10(365)
L1403916-04A	Vial HCl preserved	C	N/A	3.0	Y	Absent	MCP-8260-10(14)
L1403916-04B	Vial HCl preserved	C	N/A	3.0	Y	Absent	MCP-8260-10(14)
L1403916-04C	Vial HCl preserved	C	N/A	3.0	Y	Absent	MCP-8260-10(14)
L1403916-04D	Amber 1000ml unpreserved	B	7	2.6	Y	Absent	MCP-8082-10(365)
L1403916-04E	Amber 1000ml unpreserved	B	7	2.6	Y	Absent	MCP-8082-10(365)
L1403916-05A	Amber 1000ml unpreserved	B	7	2.6	Y	Absent	MCP-8082-10(365)
L1403916-05B	Amber 1000ml unpreserved	B	7	2.6	Y	Absent	MCP-8082-10(365)
L1403916-06A	Vial HCl preserved	C	N/A	3.0	Y	Absent	MCP-8260-10(14)
L1403916-06B	Vial HCl preserved	C	N/A	3.0	Y	Absent	MCP-8260-10(14)
L1403916-06C	Vial HCl preserved	C	N/A	3.0	Y	Absent	MCP-8260-10(14)
L1403916-06D	Amber 1000ml unpreserved	B	7	2.6	Y	Absent	MCP-8082-10(365)
L1403916-06E	Amber 1000ml unpreserved	B	7	2.6	Y	Absent	MCP-8082-10(365)
L1403916-07A	Amber 1000ml unpreserved	B	7	2.6	Y	Absent	MCP-8082-10(365)

*Values in parentheses indicate holding time in days

Project Name: NBHS IRA
Project Number: 115058

Lab Number: L1403916
Report Date: 02/28/14

Container Information

Container ID	Container Type	Cooler	pH	Temp deg C	Pres	Seal	Analysis(*)
L1403916-07B	Amber 1000ml unpreserved	B	7	2.6	Y	Absent	MCP-8082-10(365)
L1403916-08A	Amber 1000ml unpreserved	B	7	2.6	Y	Absent	FILTER-EXT(1)
L1403916-08B	Amber 1000ml unpreserved	B	7	2.6	Y	Absent	FILTER-EXT(1)
L1403916-08X	Amber 1000ml unpreserved split	B	7	2.6	Y	Absent	MCP-8082-10(365)
L1403916-08Y	Amber 1000ml unpreserved split	B	7	2.6	Y	Absent	MCP-8082-10(365)
L1403916-09A	Vial HCl preserved	C	N/A	3.0	Y	Absent	MCP-8260-10(14)
L1403916-09B	Vial HCl preserved	C	N/A	3.0	Y	Absent	MCP-8260-10(14)
L1403916-09C	Vial HCl preserved	C	N/A	3.0	Y	Absent	MCP-8260-10(14)
L1403916-09D	Amber 1000ml unpreserved	A	7	2.7	Y	Absent	MCP-8082-10(365)
L1403916-09E	Amber 1000ml unpreserved	A	7	2.7	Y	Absent	MCP-8082-10(365)
L1403916-10A	Amber 1000ml unpreserved	A	7	2.7	Y	Absent	MCP-8082-10(365)
L1403916-10B	Amber 1000ml unpreserved	A	7	2.7	Y	Absent	MCP-8082-10(365)
L1403916-11A	Amber 1000ml unpreserved	A	7	2.7	Y	Absent	FILTER-EXT(1)
L1403916-11B	Amber 1000ml unpreserved	A	7	2.7	Y	Absent	FILTER-EXT(1)
L1403916-11X	Amber 1000ml unpreserved split	A	7	2.7	Y	Absent	MCP-8082-10(365)
L1403916-11Y	Amber 1000ml unpreserved split	A	7	2.7	Y	Absent	MCP-8082-10(365)
L1403916-12A	Vial HCl preserved	C	N/A	3.0	Y	Absent	MCP-8260-10(14)
L1403916-12B	Vial HCl preserved	C	N/A	3.0	Y	Absent	MCP-8260-10(14)
L1403916-12C	Vial HCl preserved	C	N/A	3.0	Y	Absent	MCP-8260-10(14)
L1403916-12D	Amber 1000ml unpreserved	C	7	3.0	Y	Absent	MCP-8082-10(365)
L1403916-12E	Amber 1000ml unpreserved	C	7	3.0	Y	Absent	MCP-8082-10(365)
L1403916-13A	Amber 1000ml unpreserved	A	7	2.7	Y	Absent	MCP-8082-10(365)
L1403916-13B	Amber 1000ml unpreserved	A	7	2.7	Y	Absent	MCP-8082-10(365)
L1403916-14A	Amber 1000ml unpreserved	A	7	2.7	Y	Absent	FILTER-EXT(1)
L1403916-14B	Amber 1000ml unpreserved	A	7	2.7	Y	Absent	FILTER-EXT(1)
L1403916-14X	Amber 1000ml unpreserved split	A	7	2.7	Y	Absent	MCP-8082-10(365)
L1403916-14Y	Amber 1000ml unpreserved split	A	7	2.7	Y	Absent	MCP-8082-10(365)
L1403916-15A	Vial HCl preserved	C	N/A	3.0	Y	Absent	HOLD-8260(14)

*Values in parentheses indicate holding time in days

Project Name:	NBHS IRA	**Lab Number:**	L1403916
Project Number:	115058	**Report Date:**	02/28/14

GLOSSARY

Acronyms

EDL	- Estimated Detection Limit: This value represents the level to which target analyte concentrations are reported as estimated values, when those target analyte concentrations are quantified below the reporting limit (RL). The EDL includes any adjustments from dilutions, concentrations or moisture content, where applicable. The use of EDLs is specific to the analysis of PAHs using Solid-Phase Microextraction (SPME).
EPA	- Environmental Protection Agency.
LCS	- Laboratory Control Sample: A sample matrix, free from the analytes of interest, spiked with verified known amounts of analytes or a material containing known and verified amounts of analytes.
LCSD	- Laboratory Control Sample Duplicate: Refer to LCS.
LFB	- Laboratory Fortified Blank: A sample matrix, free from the analytes of interest, spiked with verified known amounts of analytes or a material containing known and verified amounts of analytes.
MDL	- Method Detection Limit: This value represents the level to which target analyte concentrations are reported as estimated values, when those target analyte concentrations are quantified below the reporting limit (RL). The MDL includes any adjustments from dilutions, concentrations or moisture content, where applicable.
MS	- Matrix Spike Sample: A sample prepared by adding a known mass of target analyte to a specified amount of matrix sample for which an independent estimate of target analyte concentration is available.
MSD	- Matrix Spike Sample Duplicate: Refer to MS.
NA	- Not Applicable.
NC	- Not Calculated: Term is utilized when one or more of the results utilized in the calculation are non-detect at the parameter's reporting unit.
NI	- Not Ignitable.
RL	- Reporting Limit: The value at which an instrument can accurately measure an analyte at a specific concentration. The RL includes any adjustments from dilutions, concentrations or moisture content, where applicable.
RPD	- Relative Percent Difference: The results from matrix and/or matrix spike duplicates are primarily designed to assess the precision of analytical results in a given matrix and are expressed as relative percent difference (RPD). Values which are less than five times the reporting limit for any individual parameter are evaluated by utilizing the absolute difference between the values; although the RPD value will be provided in the report.
SRM	- Standard Reference Material: A reference sample of a known or certified value that is of the same or similar matrix as the associated field samples.

Footnotes

1	- The reference for this analyte should be considered modified since this analyte is absent from the target analyte list of the original method.

Terms

Analytical Method: Both the document from which the method originates and the analytical reference method. (Example: EPA 8260B is shown as 1,8260B.) The codes for the reference method documents are provided in the References section of the Addendum.

Data Qualifiers

A	- Spectra identified as "Aldol Condensation Product".
B	- The analyte was detected above the reporting limit in the associated method blank. Flag only applies to associated field samples that have detectable concentrations of the analyte at less than ten times (10x) the concentration found in the blank. For MCP-related projects, flag only applies to associated field samples that have detectable concentrations of the analyte at less than ten times (10x) the concentration found in the blank. For DOD-related projects, flag only applies to associated field samples that have detectable concentrations of the analyte at less than ten times (10x) the concentration found in the blank AND the analyte was detected above one-half the reporting limit (or above the reporting limit for common lab contaminants) in the associated method blank. For NJ-Air-related projects, flag only applies to associated field samples that have detectable concentrations of the analyte above the reporting limit.
C	- Co-elution: The target analyte co-elutes with a known lab standard (i.e. surrogate, internal standards, etc.) for co-extracted analyses.
D	- Concentration of analyte was quantified from diluted analysis. Flag only applies to field samples that have detectable concentrations of the analyte.
E	- Concentration of analyte exceeds the range of the calibration curve and/or linear range of the instrument.
G	- The concentration may be biased high due to matrix interferences (i.e, co-elution) with non-target compound(s). The result should be considered estimated.
H	- The analysis of pH was performed beyond the regulatory-required holding time of 15 minutes from the time of sample collection.
I	- The lower value for the two columns has been reported due to obvious interference.

Report Format: Data Usability Report

Project Name:	NBHS IRA	**Lab Number:**	L1403916
Project Number:	115058	**Report Date:**	02/28/14

Data Qualifiers

M - Reporting Limit (RL) exceeds the MCP CAM Reporting Limit for this analyte.

NJ - Presumptive evidence of compound. This represents an estimated concentration for Tentatively Identified Compounds (TICs), where the identification is based on a mass spectral library search.

P - The RPD between the results for the two columns exceeds the method-specified criteria.

Q - The quality control sample exceeds the associated acceptance criteria. For DOD-related projects, LCS and/or Continuing Calibration Standard exceedences are also qualified on all associated sample results. Note: This flag is not applicable for matrix spike recoveries when the sample concentration is greater than 4x the spike added or for batch duplicate RPD when the sample concentrations are less than 5x the RL. (Metals only.)

R - Analytical results are from sample re-analysis.

RE - Analytical results are from sample re-extraction.

S - Analytical results are from modified screening analysis.

J - Estimated value. This represents an estimated concentration for Tentatively Identified Compounds (TICs).

ND - Not detected at the reporting limit (RL) for the sample.

Report Format: Data Usability Report

REFERENCES

97 EPA Test Methods (SW-846) with QC Requirements & Performance Standards for the Analysis of EPA SW-846 Methods under the Massachusetts Contingency Plan, WSC-CAM-IIA, IIB, IIIA, IIIB, IIIC, IIID, VA, VB, VC, VIA, VIB, VIIIA and VIIIB, July 2010.

LIMITATION OF LIABILITIES

Alpha Analytical performs services with reasonable care and diligence normal to the analytical testing laboratory industry. In the event of an error, the sole and exclusive responsibility of Alpha Analytical shall be to re-perform the work at it's own expense. In no event shall Alpha Analytical be held liable for any incidental, consequential or special damages, including but not limited to, damages in any way connected with the use of, interpretation of, information or analysis provided by Alpha Analytical.

We strongly urge our clients to comply with EPA protocol regarding sample volume, preservation, cooling, containers, sampling procedures, holding time and splitting of samples in the field.

Certification Information

Last revised December 11, 2013

The following analytes are not included in our NELAP Scope of Accreditation:

Westborough Facility
EPA 524.2: Acetone, 2-Butanone (Methyl ethyl ketone (MEK)), Tert-butyl alcohol, 2-Hexanone, Tetrahydrofuran, 1,3,5-Trichlorobenzene, 4-Methyl-2-pentanone (MIBK), Carbon disulfide, Diethyl ether.
EPA 8260C: 1,2,4,5-Tetramethylbenzene, 4-Ethyltoluene, Iodomethane (methyl iodide), Methyl methacrylate, Azobenzene.
EPA 8330A/B: PETN, Picric Acid, Nitroglycerine, 2,6-DANT, 2,4-DANT.
EPA 8270D: 1-Methylnaphthalene, Dimethylnaphthalene,1,4-Diphenylhydrazine.
EPA 625: 4-Chloroaniline, 4-Methylphenol.
SM4500: Soil: Total Phosphorus, TKN, NO2, NO3.
EPA 9071: Total Petroleum Hydrocarbons, Oil & Grease.

Mansfield Facility
EPA 8270D: Biphenyl.
EPA TO-15: Halothane, 2,4,4-Trimethyl-2-pentene, 2,4,4-Trimethyl-1-pentene, Thiophene, 2-Methylthiophene, 3-Methylthiophene, 2-Ethylthiophene, 1,2,3-Trimethylbenzene, Indan, Indene, 1,2,4,5-Tetramethylbenzene, Benzothiophene, 1-Methylnaphthalene.

The following analytes are included in our Massachusetts DEP Scope of Accreditation, Westborough Facility:

Drinking Water
EPA 200.8: Sb,As,Ba,Be,Cd,Cr,Cu,Pb,Ni,Se,Tl; **EPA 200.7**: Ba,Be,Ca,Cd,Cr,Cu,Na; **EPA 245.1:** Mercury;
EPA 300.0: Nitrate-N, Fluoride, Sulfate; **EPA 353.2**: Nitrate-N, Nitrite-N; **SM4500NO3-F**: Nitrate-N, Nitrite-N; **SM4500F-C, SM4500CN-CE, EPA 180.1, SM2130B, SM4500Cl-D, SM2320B, SM2540C, SM4500H-B**
EPA 332: Perchlorate.
Microbiology: **SM9215B; SM9223-P/A, SM9223B-Colilert-QT, Enterolert-QT.**

Non-Potable Water
EPA 200.8: Al,Sb,As,Be,Cd,Cr,Cu,Pb,Mn,Ni,Se,Ag,Tl,Zn;
EPA 200.7: Al,Sb,As,Be,Cd,Ca,Cr,Co,Cu,Fe,Pb,Mg,Mn,Mo,Ni,K,Se,Ag,Na,Sr,Ti,Tl,V,Zn;
EPA 245.1, SM4500H,B, EPA 120.1, SM2510B, SM2540C, SM2340B, SM2320B, SM4500CL-E, SM4500F-BC, SM426C, SM4500NH3-BH, **EPA 350.1**: Ammonia-N, **LACHAT 10-107-06-1-B**: Ammonia-N, **SM4500NO3-F,**
EPA 353.2: Nitrate-N**, SM4500NH3-BC-NES, EPA 351.1, SM4500P-E, SM4500P-B, E, SM5220D, EPA 410.4, SM5210B, SM5310C, SM4500CL-D, EPA 1664, SM14 510AC, EPA 420.1, SM4500-CN-CE, SM2540D.**
EPA 624: Volatile Halocarbons & Aromatics,
EPA 608: Chlordane, Toxaphene, Aldrin, alpha-BHC, beta-BHC, gamma-BHC, delta-BHC, Dieldrin, DDD, DDE, DDT, Endosulfan I, Endosulfan II, Endosulfan sulfate, Endrin, Endrin Aldehyde, Heptachlor, Heptachlor Epoxide, PCBs
EPA 625: SVOC (Acid/Base/Neutral Extractables), **EPA 600/4-81-045**: PCB-Oil.
Microbiology: **SM9223B-Colilert-QT; Enterolert-QT, SM9222D-MF**.

For a complete listing of analytes and methods, please contact your Alpha Project Manager.

CHAIN OF CUSTODY

PAGE ____ OF ____

Date Rec'd in Lab: 2/21/14

ALPHA Job #: L1403916

ALPHA ANALYTICAL — World Class Chemistry

8 Walkup Drive, Westboro, MA 01581, Tel: 508-898-9220
320 Forbes Blvd, Mansfield, MA 02048, Tel: 508-822-9300

Project Information

Project Name: NBHS IRA
Project Location: NBHS NEW BEDFORD
Project #: 115058
Project Manager: DAVID SULLIVAN
ALPHA Quote #:

Report Information - Data Deliverables

☑ ADEx ☑ EMAIL

Billing Information

☐ Same as Client info PO #:

Client Information

Client: TRC
Address: 650 SUFFOLK ST, LOWELL MA
Phone: 978-970-5600
Email:

Regulatory Requirements & Project Information Requirements

☑ Yes ☐ No MA MCP Analytical Methods ☐ Yes ☐ No CT RCP Analytical Methods
☐ Yes ☐ No Matrix Spike Required on this SDG? (Required for MCP Inorganics)
☐ Yes ☐ No GW1 Standards (Info Required for Metals & EPH with Targets)
☐ Yes ☐ No NPDES RGP
☐ Other State /Fed Program ______ Criteria ______

Turn-Around Time

☑ Standard ☐ RUSH (only confirmed if pre-approved!)

Date Due: ~~2/29/14~~ ~~3/7/14~~ 2/28/14

Additional Project Information:

ANALYSIS: VOC: ☑ 8260 ☐ 624 ☐ 524.2; SVOC: ☐ ABN ☐ PAH; METALS: ☐ MCP 13 ☐ MCP 14 ☐ RCP 15; METALS: ☐ RCRA5 ☐ RCRA8 ☐ PP13; EPH: ☐ Ranges & Targets ☐ Ranges Only; VPH: ☐ Ranges & Targets ☐ Ranges Only; ☑ PCB ☐ PEST; TPH: ☐ Quant Only ☐ Fingerprint; PCBs FIELD FILTERED 0.45; PCBs LAB FILTERED 0.2

SAMPLE INFO — Filtration: ☑ Field ☑ Lab to do (BOTH); Preservation: ☐ Lab to do

ALPHA Lab ID (Lab Use Only)	Sample ID	Collection Date	Collection Time	Sample Matrix	Sampler Initials	VOC 8260	PCB	PCBs Field Filtered 0.45	PCBs Lab Filtered 0.2	Sample Comments	Total # Bottles
03916-01,02,03	MW-27R	2/21	9:50		JF	✓	✓	✓	✓		9
04,05	MW-28	"	10:40			✓	✓	✓			7
06,07,08	MW-41	"	14:05			✓	✓	✓	✓		9
09,10,11	MW-42R	"	14:40			✓	✓	✓	✓		9
12,13,14	DUP-1	"	N/A			✓	✓	✓	✓		9
Container Type						V	A	A	A		
Preservative						B	A	A	A		

Container Type: P= Plastic, A= Amber glass, V= Vial, G= Glass, B= Bacteria cup, C= Cube, O= Other, E= Encore, D= BOD Bottle

Preservative: A= None, B= HCl, C= HNO_3, D= H_2SO_4, E= NaOH, F= MeOH, G= $NaHSO_4$, H = $Na_2S_2O_3$, I= Ascorbic Acid, J = NH_4Cl, K= Zn Acetate, O= Other

Relinquished By:	Date/Time	Received By:	Date/Time
[signature]	2/21/14 19:30	[signature]	2/21/14 19:30

All samples submitted are subject to Alpha's Terms and Conditions. See reverse side.
FORM NO: 01-01 (rev. 12-Mar-2012)

7A
Volatile Organics CONTINUING CALIBRATION CHECK

Lab Name: Alpha Analytical Labs

SDG No.: L1403916

Instrument ID: Quimby.i Calibration Date: 26-FEB-2014 Time: 07:07

Lab File ID: 0226A03 Init. Calib. Date(s): 17-FEB-2 17-FEB-2

Sample No: 8260 CCAL Init. Calib. Times : 07:32 10:41

Compound	RRF	RRF	MIN RRF	%D	MAX %D	
dichlorodifluoromethane	.39687	.33448	.1	-16	20	
chloromethane	.81904	.71817	.1	-12	20	
vinyl chloride	.46992	.49031	.1	4	20	
bromomethane	.23308	.29556	.1	27	20	F
chloroethane	.33964	.35406	.1	4	20	
trichlorofluoromethane	.59849	.66421	.1	11	20	
ethyl ether	.20235	.20753	.05	3	20	
acrolein	.08363	.07973	.05	-5	20	
freon-113	.41698	.45804	.1	10	20	
acetone	.11596	.14774	.1	27	20	F
1,1,-dichloroethene	.4187	.43408	.1	4	20	
tert-butyl alcohol	.02806	.02147	.05	-23	20	F
iodomethane	.4925	.50403	.05	2	20	
methyl acetate	.26914	.27385	.01	2	20	
methylene chloride	.46494	.48747	.1	5	20	
carbon disulfide	1.1220	1.1291	.1	1	20	
acrylonitrile	.15211	.15779	.05	4	20	
methyl tert butyl ether	.91618	.88502	.1	-3	20	
Halothane	.31583	.34068	.05	8	20	
trans-1,2-dichloroethene	.46109	.48627	.1	5	20	
Diisopropyl Ether	2.1695	2.3052	.05	6	20	
vinyl acetate	.66032	.60937	.05	-8	20	
1,1-dichloroethane	.96935	1.0239	.2	6	20	
Ethyl-Tert-Butyl-Ether	1.6600	1.3881	.05	-16	20	
2-butanone	.16573	.24698	.1	49	20	F
2,2-dichloropropane	.56432	.38922	.05	-31	20	F
ethyl acetate	.32249	.35216	.05	9	20	
cis-1,2-dichloroethene	.49397	.51206	.1	4	20	
chloroform	.78467	.84709	.2	8	20	
bromochloromethane	.19692	.20355	.05	3	20	
tetrahydrofuran	.10827	.10671	.05	-1	20	
1,1,1-trichloroethane	.67632	.67113	.1	-1	20	
cyclohexane	1.2560	1.3275	.01	6	30	
1,1-dichloropropene	.66864	.72796	.05	9	20	
carbontetrachloride	.47775	.44331	.1	-7	20	
Tertiary-Amyl Methyl Ether	1.0218	.908	.05	-11	20	
1,2-dichloroethane	.61416	.69548	.1	13	20	
benzene	1.8843	1.9696	.5	5	20	

FORM VII MCP-8260-10

7A
CONTINUING CALIBRATION CHECK

Lab Name: Alpha Analytical Labs

SDG No.: L1403916

Instrument ID: Quimby.i Calibration Date: 26-FEB-2014 Time: 07:07

Lab File ID: 0226A03 Init. Calib. Date(s): 17-FEB-2 17-FEB-2

Sample No: 8260 CCAL Init. Calib. Times : 07:32 10:41

Compound	RRF	RRF	MIN RRF	%D	MAX %D	
trichloroethene	.48339	.5163	.2	7	20	
methyl cyclohexane	.84947	.88998	.01	5	30	
1,2-dichloropropane	.54753	.56356	.1	3	20	
bromodichloromethane	.51689	.57456	.2	11	20	
1,4-dioxane	.00253	.00223	.05	-12	20	F
dibromomethane	.21315	.22702	.05	7	20	
2-chloroethylvinyl ether	.03779	.03942	.05	4	20	F
4-methyl-2-pentanone	.13743	.13401	.1	-2	20	
cis-1,3-dichloropropene	.68229	.63324	.2	-7	20	
toluene	1.5261	1.5575	.4	2	20	
ethyl-methacrylate	.52864	.47047	.01	-11	30	
trans-1,3-dichloropropene	.69149	.57068	.1	-17	20	
2-hexanone	.30721	.32749	.1	7	20	
1,1,2-trichloroethane	.32721	.33429	.1	2	20	
1,3-dichloropropane	.73011	.7448	.05	2	20	
tetrachloroethene	.60316	.60872	.2	1	20	
chlorodibromomethane	100	95.595	.1	-4	20	
1,2-dibromoethane	.38542	.38042	.1	-1	20	
chlorobenzene	1.5987	1.6605	.5	4	20	
1,1,1,2-tetrachloroethane	.48431	.45825	.05	-5	20	
ethyl benzene	2.9467	3.1287	.1	6	20	
p/m xylene	1.1485	1.2080	.1	5	20	
o xylene	1.0708	1.1244	.3	5	20	
styrene	1.7358	1.8306	.31	5	20	
isopropylbenzene	2.9438	3.1304	.1	6	20	
bromoform	100	94.993	.1	-5	20	
1,4-dichlorobutane	1.9192	1.9109	.01	0	30	
1,1,2,2,-tetrachloroethane	.84462	.83924	.3	-1	20	
1,2,3-trichloropropane	.65944	.65843	.05	0	20	
trans-1,4-dichloro-2-butene	.35832	.32437	.05	-9	20	
n-propylbenzene	6.3880	6.7682	.05	6	20	
bromobenzene	1.2165	1.2353	.05	2	20	
4-ethyltoluene	2.3239	2.5286	.05	9	20	
1,3,5-trimethybenzene	4.5544	4.8255	.05	6	20	
2-chlorotoluene	4.3587	4.6193	.05	6	20	
4-chorotoluene	3.9950	4.196	.05	5	20	
tert-butylbenzene	3.8609	4.0794	.05	6	20	
1,2,4-trimethylbenzene	4.5600	4.8391	.05	6	20	

FORM VII MCP-8260-10

7A
CONTINUING CALIBRATION CHECK

Lab Name: Alpha Analytical Labs

SDG No.: L1403916

Instrument ID: Quimby.i Calibration Date: 26-FEB-2014 Time: 07:07

Lab File ID: 0226A03 Init. Calib. Date(s): 17-FEB-2 17-FEB-2

Sample No: 8260 CCAL Init. Calib. Times : 07:32 10:41

Compound	$\overline{RRF}$	RRF	MIN RRF	%D	MAX %D
sec-butylbenzene	5.6850	6.0373	.05	6	20
p-isopropyltoluene	4.6202	4.8862	.05	6	20
1,3-dichlorobenzene	2.4048	2.5161	.6	5	20
1,4-dichlorobenzene	2.4180	2.4825	.5	3	20
n-butylbenzene	4.8346	5.2098	.05	8	20
1,2,4,5-tetramethylbenezene	1.1892	1.2955	.05	9	20
1,2-dichlorobenzene	2.1364	2.2106	.4	3	20
p-diethylbenzene	1.6457	1.7328	.05	5	20
1,2-dibromo-3-chloropropane	.12023	.10411	.05	-13	20
1,3,5-trichlorobenzene	1.4056	1.4468	.01	3	30
1,2,4-trichlorobenzene	1.1181	1.1245	.2	1	20
hexachlorobutadiene	.44757	.46209	.05	3	20
naphthalene	2.0778	1.9500	.05	-6	20
1,2,3-trichlorobenzene	.87801	.85742	.05	-2	20
dibromofluoromethane	.2203	.22973	.05	4	20
1,2-dichloroethane-d4	.26629	.29152	.05	9	20
toluene-d8	1.2494	1.2375	.05	-1	20
4-bromofluorobenzene	.99732	.9938	.05	0	20

FORM VII MCP-8260-10

7A
CONTINUING CALIBRATION CHECK

Lab Name: Alpha Analytical Labs

SDG No.: L1403916

Instrument ID: Quimby.i Calibration Date: 25-FEB-2014 Time: 07:52

Lab File ID: 0225A03 Init. Calib. Date(s): 17-FEB-2 17-FEB-2

Sample No: 8260 CCAL Init. Calib. Times : 07:32 10:41

Compound	RRF	RRF	MIN RRF	%D	MAX %D	
dichlorodifluoromethane	.39687	.39469	.1	-1	20	
chloromethane	.81904	.77344	.1	-6	20	
vinyl chloride	.46992	.51852	.1	10	20	
bromomethane	.23308	.31248	.1	34	20	F
chloroethane	.33964	.36428	.1	7	20	
trichlorofluoromethane	.59849	.69004	.1	15	20	
ethyl ether	.20235	.21407	.05	6	20	
acrolein	.08363	.08358	.05	0	20	
freon-113	.41698	.47285	.1	13	20	
acetone	.11596	.14089	.1	21	20	F
1,1,-dichloroethene	.4187	.44913	.1	7	20	
tert-butyl alcohol	.02806	.0193	.05	-31	20	F
iodomethane	.4925	.48344	.05	-2	20	
methyl acetate	.26914	.27921	.01	4	20	
methylene chloride	.46494	.49088	.1	6	20	
carbon disulfide	1.1220	1.1663	.1	4	20	
acrylonitrile	.15211	.1639	.05	8	20	
methyl tert butyl ether	.91618	.9369	.1	2	20	
Halothane	.31583	.34482	.05	9	20	
trans-1,2-dichloroethene	.46109	.48991	.1	6	20	
Diisopropyl Ether	2.1695	2.3524	.05	8	20	
vinyl acetate	.66032	.6261	.05	-5	20	
1,1-dichloroethane	.96935	1.0257	.2	6	20	
Ethyl-Tert-Butyl-Ether	1.6600	1.4515	.05	-13	20	
2-butanone	.16573	.17141	.1	3	20	
2,2-dichloropropane	.56432	.40107	.05	-29	20	F
ethyl acetate	.32249	.34701	.05	8	20	
cis-1,2-dichloroethene	.49397	.51055	.1	3	20	
chloroform	.78467	.84998	.2	8	20	
bromochloromethane	.19692	.20871	.05	6	20	
tetrahydrofuran	.10827	.11739	.05	8	20	
1,1,1-trichloroethane	.67632	.67072	.1	-1	20	
cyclohexane	1.2560	1.4006	.01	12	30	
1,1-dichloropropene	.66864	.74456	.05	11	20	
carbontetrachloride	.47775	.43429	.1	-9	20	
Tertiary-Amyl Methyl Ether	1.0218	.9516	.05	-7	20	
1,2-dichloroethane	.61416	.70337	.1	15	20	
benzene	1.8843	1.9974	.5	6	20	

FORM VII MCP-8260-10

7A
CONTINUING CALIBRATION CHECK

Lab Name: Alpha Analytical Labs

SDG No.: L1403916

Instrument ID: Quimby.i Calibration Date: 25-FEB-2014 Time: 07:52

Lab File ID: 0225A03 Init. Calib. Date(s): 17-FEB-2 17-FEB-2

Sample No: 8260 CCAL Init. Calib. Times : 07:32 10:41

Compound	RRF	RRF	MIN RRF	%D	MAX %D	
trichloroethene	.48339	.51449	.2	6	20	
methyl cyclohexane	.84947	.93398	.01	10	30	
1,2-dichloropropane	.54753	.56883	.1	4	20	
bromodichloromethane	.51689	.5729	.2	11	20	
1,4-dioxane	.00253	.00243	.05	-4	20	F
dibromomethane	.21315	.23038	.05	8	20	
2-chloroethylvinyl ether	.03779	.04228	.05	12	20	F
4-methyl-2-pentanone	.13743	.14058	.1	2	20	
cis-1,3-dichloropropene	.68229	.6429	.2	-6	20	
toluene	1.5261	1.5852	.4	4	20	
ethyl-methacrylate	.52864	.48802	.01	-8	30	
trans-1,3-dichloropropene	.69149	.58655	.1	-15	20	
2-hexanone	.30721	.32852	.1	7	20	
1,1,2-trichloroethane	.32721	.34804	.1	6	20	
1,3-dichloropropane	.73011	.76978	.05	5	20	
tetrachloroethene	.60316	.61732	.2	2	20	
chlorodibromomethane	100	95.389	.1	-5	20	
1,2-dibromoethane	.38542	.39081	.1	1	20	
chlorobenzene	1.5987	1.6854	.5	5	20	
1,1,1,2-tetrachloroethane	.48431	.44923	.05	-7	20	
ethyl benzene	2.9467	3.1633	.1	7	20	
p/m xylene	1.1485	1.2090	.1	5	20	
o xylene	1.0708	1.1284	.3	5	20	
styrene	1.7358	1.8469	.31	6	20	
isopropylbenzene	2.9438	3.1433	.1	7	20	
bromoform	100	94.911	.1	-5	20	
1,4-dichlorobutane	1.9192	1.9915	.01	4	30	
1,1,2,2,-tetrachloroethane	.84462	.87335	.3	3	20	
1,2,3-trichloropropane	.65944	.68253	.05	4	20	
trans-1,4-dichloro-2-butene	.35832	.34661	.05	-3	20	
n-propylbenzene	6.3880	6.7724	.05	6	20	
bromobenzene	1.2165	1.2582	.05	3	20	
4-ethyltoluene	2.3239	2.4984	.05	8	20	
1,3,5-trimethybenzene	4.5544	4.7576	.05	4	20	
2-chlorotoluene	4.3587	4.5881	.05	5	20	
4-chorotoluene	3.9950	4.1808	.05	5	20	
tert-butylbenzene	3.8609	3.9941	.05	3	20	
1,2,4-trimethylbenzene	4.5600	4.7999	.05	5	20	

FORM VII MCP-8260-10

7A
CONTINUING CALIBRATION CHECK

Lab Name: Alpha Analytical Labs

SDG No.: L1403916

Instrument ID: Quimby.i Calibration Date: 25-FEB-2014 Time: 07:52

Lab File ID: 0225A03 Init. Calib. Date(s): 17-FEB-2 17-FEB-2

Sample No: 8260 CCAL Init. Calib. Times : 07:32 10:41

Compound	RRF	RRF	MIN RRF	%D	MAX %D
sec-butylbenzene	5.6850	5.9525	.05	5	20
p-isopropyltoluene	4.6202	4.7886	.05	4	20
1,3-dichlorobenzene	2.4048	2.5141	.6	5	20
1,4-dichlorobenzene	2.4180	2.5167	.5	4	20
n-butylbenzene	4.8346	5.1328	.05	6	20
1,2,4,5-tetramethylbenezene	1.1892	1.2922	.05	9	20
1,2-dichlorobenzene	2.1364	2.2339	.4	5	20
p-diethylbenzene	1.6457	1.7413	.05	6	20
1,2-dibromo-3-chloropropane	.12023	.10534	.05	-12	20
1,3,5-trichlorobenzene	1.4056	1.4543	.01	3	30
1,2,4-trichlorobenzene	1.1181	1.1489	.2	3	20
hexachlorobutadiene	.44757	.4518	.05	1	20
naphthalene	2.0778	2.0878	.05	0	20
1,2,3-trichlorobenzene	.87801	.88684	.05	1	20
dibromofluoromethane	.2203	.23067	.05	5	20
1,2-dichloroethane-d4	.26629	.28928	.05	9	20
toluene-d8	1.2494	1.2500	.05	0	20
4-bromofluorobenzene	.99732	1.0029	.05	1	20

FORM VII MCP-8260-10

7A
CONTINUING CALIBRATION CHECK

Lab Name: Alpha Analytical Labs

SDG No.: L1403916

Instrument ID: Quimby.i Calibration Date: 27-FEB-2014 Time: 05:53

Lab File ID: 0227A03 Init. Calib. Date(s): 17-FEB-2 17-FEB-2

Sample No: 8260 CCAL Init. Calib. Times : 07:32 10:41

Compound	RRF	RRF	MIN RRF	%D	MAX %D	
dichlorodifluoromethane	.39687	.32969	.1	-17	20	
chloromethane	.81904	.67349	.1	-18	20	
vinyl chloride	.46992	.46111	.1	-2	20	
bromomethane	.23308	.2767	.1	19	20	
chloroethane	.33964	.32435	.1	-5	20	
trichlorofluoromethane	.59849	.62237	.1	4	20	
ethyl ether	.20235	.19187	.05	-5	20	
acrolein	.08363	.07736	.05	-7	20	
freon-113	.41698	.42729	.1	2	20	
acetone	.11596	.12412	.1	7	20	
1,1,-dichloroethene	.4187	.40283	.1	-4	20	
tert-butyl alcohol	.02806	.0189	.05	-33	20	F
iodomethane	.4925	.46888	.05	-5	20	
methyl acetate	.26914	.25579	.01	-5	20	
methylene chloride	.46494	.45176	.1	-3	20	
carbon disulfide	1.1220	1.0569	.1	-6	20	
acrylonitrile	.15211	.14419	.05	-5	20	
methyl tert butyl ether	.91618	.83207	.1	-9	20	
Halothane	.31583	.3131	.05	-1	20	
trans-1,2-dichloroethene	.46109	.44726	.1	-3	20	
Diisopropyl Ether	2.1695	2.1303	.05	-2	20	
vinyl acetate	.66032	.58397	.05	-12	20	
1,1-dichloroethane	.96935	.95058	.2	-2	20	
Ethyl-Tert-Butyl-Ether	1.6600	1.3010	.05	-22	20	F
2-butanone	.16573	.15861	.1	-4	20	
2,2-dichloropropane	.56432	.35091	.05	-38	20	F
ethyl acetate	.32249	.32727	.05	1	20	
cis-1,2-dichloroethene	.49397	.47907	.1	-3	20	
chloroform	.78467	.79565	.2	1	20	
bromochloromethane	.19692	.18631	.05	-5	20	
tetrahydrofuran	.10827	.10263	.05	-5	20	
1,1,1-trichloroethane	.67632	.63034	.1	-7	20	
cyclohexane	1.2560	1.2405	.01	-1	30	
1,1-dichloropropene	.66864	.67983	.05	2	20	
carbontetrachloride	.47775	.40927	.1	-14	20	
Tertiary-Amyl Methyl Ether	1.0218	.83583	.05	-18	20	
1,2-dichloroethane	.61416	.65733	.1	7	20	
benzene	1.8843	1.8306	.5	-3	20	

FORM VII MCP-8260-10

7A
CONTINUING CALIBRATION CHECK

Lab Name: Alpha Analytical Labs

SDG No.: L1403916

Instrument ID: Quimby.i Calibration Date: 27-FEB-2014 Time: 05:53

Lab File ID: 0227A03 Init. Calib. Date(s): 17-FEB-2 17-FEB-2

Sample No: 8260 CCAL Init. Calib. Times : 07:32 10:41

Compound	RRF	RRF	MIN RRF	%D	MAX %D	
trichloroethene	.48339	.47697	.2	-1	20	
methyl cyclohexane	.84947	.8419	.01	-1	30	
1,2-dichloropropane	.54753	.51773	.1	-5	20	
bromodichloromethane	.51689	.53269	.2	3	20	
1,4-dioxane	.00253	.00236	.05	-7	20	F
dibromomethane	.21315	.20859	.05	-2	20	
2-chloroethylvinyl ether	.03779	.03875	.05	3	20	F
4-methyl-2-pentanone	.13743	.12332	.1	-10	20	
cis-1,3-dichloropropene	.68229	.57715	.2	-15	20	
toluene	1.5261	1.4473	.4	-5	20	
ethyl-methacrylate	.52864	.43515	.01	-18	30	
trans-1,3-dichloropropene	.69149	.52571	.1	-24	20	F
2-hexanone	.30721	.29004	.1	-6	20	
1,1,2-trichloroethane	.32721	.30844	.1	-6	20	
1,3-dichloropropane	.73011	.69131	.05	-5	20	
tetrachloroethene	.60316	.57706	.2	-4	20	
chlorodibromomethane	100	88.560	.1	-11	20	
1,2-dibromoethane	.38542	.35385	.1	-8	20	
chlorobenzene	1.5987	1.5442	.5	-3	20	
1,1,1,2-tetrachloroethane	.48431	.42152	.05	-13	20	
ethyl benzene	2.9467	2.9480	.1	0	20	
p/m xylene	1.1485	1.1263	.1	-2	20	
o xylene	1.0708	1.0430	.3	-3	20	
styrene	1.7358	1.6962	.31	-2	20	
isopropylbenzene	2.9438	2.9511	.1	0	20	
bromoform	100	89.916	.1	-10	20	
1,4-dichlorobutane	1.9192	1.7334	.01	-10	30	
1,1,2,2,-tetrachloroethane	.84462	.76385	.3	-10	20	
1,2,3-trichloropropane	.65944	.60139	.05	-9	20	
trans-1,4-dichloro-2-butene	.35832	.3007	.05	-16	20	
n-propylbenzene	6.3880	6.3646	.05	0	20	
bromobenzene	1.2165	1.1464	.05	-6	20	
4-ethyltoluene	2.3239	2.3908	.05	3	20	
1,3,5-trimethybenzene	4.5544	4.5028	.05	-1	20	
2-chlorotoluene	4.3587	4.2234	.05	-3	20	
4-chorotoluene	3.9950	3.8672	.05	-3	20	
tert-butylbenzene	3.8609	3.8057	.05	-1	20	
1,2,4-trimethylbenzene	4.5600	4.4757	.05	-2	20	

FORM VII MCP-8260-10

7A
CONTINUING CALIBRATION CHECK

Lab Name: Alpha Analytical Labs

SDG No.: L1403916

Instrument ID: Quimby.i Calibration Date: 27-FEB-2014 Time: 05:53

Lab File ID: 0227A03 Init. Calib. Date(s): 17-FEB-2 17-FEB-2

Sample No: 8260 CCAL Init. Calib. Times : 07:32 10:41

Compound	RRF	RRF	MIN RRF	%D	MAX %D	
sec-butylbenzene	5.6850	5.7374	.05	1	20	
p-isopropyltoluene	4.6202	4.6666	.05	1	20	
1,3-dichlorobenzene	2.4048	2.2982	.6	-4	20	
1,4-dichlorobenzene	2.4180	2.2958	.5	-5	20	
n-butylbenzene	4.8346	4.9604	.05	3	20	
1,2,4,5-tetramethylbenezene	1.1892	1.2520	.05	5	20	
1,2-dichlorobenzene	2.1364	2.0329	.4	-5	20	
p-diethylbenzene	1.6457	1.6146	.05	-2	20	
1,2-dibromo-3-chloropropane	.12023	.09391	.05	-22	20	F
1,3,5-trichlorobenzene	1.4056	1.3503	.01	-4	30	
1,2,4-trichlorobenzene	1.1181	1.0268	.2	-8	20	
hexachlorobutadiene	.44757	.45227	.05	1	20	
naphthalene	2.0778	1.7741	.05	-15	20	
1,2,3-trichlorobenzene	.87801	.79898	.05	-9	20	
dibromofluoromethane	.2203	.2334	.05	6	20	
1,2-dichloroethane-d4	.26629	.29211	.05	10	20	
toluene-d8	1.2494	1.2456	.05	0	20	
4-bromofluorobenzene	.99732	.98989	.05	-1	20	

FORM VII MCP-8260-10

SOIL SAMPLE ANALYTICAL DATA

con-test® ANALYTICAL LABORATORY
39 Spruce Street * East Longmeadow, MA 01028 * FAX 413/525-6405 * TEL. 413/525-2332

February 27, 2014

Matt Oliveira
TRC Solutions - Lowell
650 Suffolk Street
Lowell, MA 01852

Project Location: NBHS Mechanical Room., New Bedford, MA
Client Job Number:
Project Number: 115058
Laboratory Work Order Number: 14B0540

Enclosed are results of analyses for samples received by the laboratory on February 20, 2014. If you have any questions concerning this report, please feel free to contact me.

Sincerely,

Meghan E. Kelley
Project Manager

39 Spruce Street * East Longmeadow, MA 01028 * FAX 413/525-6405 * TEL. 413/525-2332

TRC Solutions - Lowell
650 Suffolk Street
Lowell, MA 01852
ATTN: Matt Oliveira

REPORT DATE: 2/27/2014

PURCHASE ORDER NUMBER: 62443

PROJECT NUMBER: 115058

ANALYTICAL SUMMARY

WORK ORDER NUMBER: 14B0540

The results of analyses performed on the following samples submitted to the CON-TEST Analytical Laboratory are found in this report.

PROJECT LOCATION: NBHS Mechanical Room., New Bedford, MA

FIELD SAMPLE #	LAB ID:	MATRIX	SAMPLE DESCRIPTION	TEST	SUB LAB
BF-1 2-4	14B0540-01	Soil		SM 2540G	
				SW-846 8082A	
BF-1 4-6	14B0540-02	Soil		SM 2540G	
				SW-846 8082A	
BF-1 6-8	14B0540-03	Soil		SM 2540G	
				SW-846 8082A	
BF-2 2-4	14B0540-04	Soil		SM 2540G	
				SW-846 8082A	
BF-2 4-6	14B0540-05	Soil		SM 2540G	
				SW-846 8082A	
BF-2 6-8	14B0540-06	Soil		SM 2540G	
				SW-846 8082A	
BF-2 8-10	14B0540-07	Soil		SM 2540G	
				SW-846 8082A	
BF-2 10-12	14B0540-08	Soil		SM 2540G	
				SW-846 8082A	
DUP-1	14B0540-09	Soil		SM 2540G	
				SW-846 8082A	
BF-3 2-4	14B0540-10	Soil		SM 2540G	
				SW-846 8082A	
BF-3 4-6	14B0540-11	Soil		SM 2540G	
				SW-846 8082A	
BF-3 6-8	14B0540-12	Soil		SM 2540G	
				SW-846 8082A	
BF-3 8-10	14B0540-13	Soil		SM 2540G	
				SW-846 8082A	
BF-3 10-12	14B0540-14	Soil		SM 2540G	
				SW-846 8082A	
BF-4 2-4	14B0540-15	Soil		SM 2540G	
				SW-846 8082A	
BF-4 4-6	14B0540-16	Soil		SM 2540G	
				SW-846 8082A	
BF-4 6-8	14B0540-17	Soil		SM 2540G	
				SW-846 8082A	
BF-4 8-10	14B0540-18	Soil		SM 2540G	
				SW-846 8082A	
BF-4 10-12	14B0540-19	Soil		SM 2540G	
				SW-846 8082A	
BF-5 2-4	14B0540-20	Soil		SM 2540G	
				SW-846 8082A	

39 Spruce Street * East Longmeadow, MA 01028 * FAX 413/525-6405 * TEL. 413/525-2332

TRC Solutions - Lowell
650 Suffolk Street
Lowell, MA 01852
ATTN: Matt Oliveira

REPORT DATE: 2/27/2014

PURCHASE ORDER NUMBER: 62443

PROJECT NUMBER: 115058

ANALYTICAL SUMMARY

WORK ORDER NUMBER: 14B0540

The results of analyses performed on the following samples submitted to the CON-TEST Analytical Laboratory are found in this report.

PROJECT LOCATION: NBHS Mechanical Room., New Bedford, MA

FIELD SAMPLE #	LAB ID:	MATRIX	SAMPLE DESCRIPTION	TEST	SUB LAB
BF-5 4-6	14B0540-21	Soil		SM 2540G	
				SW-846 8082A	
BF-5 6-8	14B0540-22	Soil		SM 2540G	
				SW-846 8082A	
BF-5 8-10	14B0540-23	Soil		SM 2540G	
				SW-846 8082A	
BF-5 10-12	14B0540-24	Soil		SM 2540G	
				SW-846 8082A	
BF-6 2-4	14B0540-25	Soil		SM 2540G	
				SW-846 8082A	
BF-6 4-6	14B0540-26	Soil		SM 2540G	
				SW-846 8082A	
BF-6 6-8	14B0540-27	Soil		SM 2540G	
				SW-846 8082A	
BF-6 8-10	14B0540-28	Soil		SM 2540G	
				SW-846 8082A	
BF-6 10-12	14B0540-29	Soil		SM 2540G	
				SW-846 8082A	
BF-7 2-4	14B0540-30	Soil		SM 2540G	
				SW-846 8082A	
BF-7 4-6	14B0540-31	Soil		SM 2540G	
				SW-846 8082A	
BF-7 6-8	14B0540-32	Soil		SM 2540G	
				SW-846 8082A	
BF-7 8-10	14B0540-33	Soil		SM 2540G	
				SW-846 8082A	
BF-7 10-12	14B0540-34	Soil		SM 2540G	
				SW-846 8082A	
DUP-2	14B0540-35	Soil		SM 2540G	
				SW-846 8082A	

con-test® ANALYTICAL LABORATORY

39 Spruce Street * East Longmeadow, MA 01028 * FAX 413/525-6405 * TEL. 413/525-2332

CASE NARRATIVE SUMMARY

All reported results are within defined laboratory quality control objectives unless listed below or otherwise qualified in this report.

REVISED REPORT - 02/27/2014 - Project location revised.

SW-846 8082A

Qualifications:

Matrix spike and/or spike duplicate recovery bias high due to contribution of other Aroclors present in the source sample.

Analyte & Samples(s) Qualified:

Aroclor-1016, Aroclor-1016 [2C], Aroclor-1260, Aroclor-1260 [2C]

B090677-MS1, B090677-MSD1, B090680-MSD1, B090680-MS1

Sample contains two incompletely resolved aroclors. Aroclor with the closest matching pattern is reported.

Analyte & Samples(s) Qualified:

Aroclor-1254, Aroclor-1254 [2C]

14B0540-02[BF-1 4-6], 14B0540-11[BF-3 4-6], 14B0540-12[BF-3 6-8], 14B0540-16[BF-4 4-6], 14B0540-17[BF-4 6-8], 14B0540-18[BF-4 8-10], 14B0540-19[BF-4 10-12]

A five times dilution was performed as part of the standard analytical procedure.

Analyte & Samples(s) Qualified:

14B0540-01[BF-1 2-4], 14B0540-03[BF-1 6-8], 14B0540-05[BF-2 4-6], 14B0540-10[BF-3 2-4], 14B0540-13[BF-3 8-10], 14B0540-14[BF-3 10-12], 14B0540-15[BF-4 2-4], 14B0540-22[BF-5 6-8], 14B0540-23[BF-5 8-10], 14B0540-24[BF-5 10-12], 14B0540-27[BF-6 6-8], 14B0540-28[BF-6 8-10], 14B0540-29[BF-6 10-12], 14B0540-30[BF-7 2-4], 14B0540-31[BF-7 4-6], 14B0540-32[BF-7 6-8], 14B0540-33[BF-7 8-10], 14B0540-34[BF-7 10-12], 14B0540-35[DUP-2]

Matrix spike duplicate RPD is outside of control limits. Reduced precision is anticipated for reported result for this compound in this sample.

Analyte & Samples(s) Qualified:

Aroclor-1016, Aroclor-1016 [2C], Aroclor-1260, Aroclor-1260 [2C]

14B0540-21[BF-5 4-6], B090680-MS1, B090680-MSD1, 14B0540-16[BF-4 4-6], B090677-MS1, B090677-MSD1

The surrogate recovery for this sample is not available due to sample dilution below the surrogate reporting limit required from high analyte concentration and/or matrix interferences.

Analyte & Samples(s) Qualified:

Decachlorobiphenyl, Decachlorobiphenyl [2C], Tetrachloro-m-xylene, Tetrachloro-m-xylene [2C]

14B0540-02[BF-1 4-6], 14B0540-06[BF-2 6-8], 14B0540-07[BF-2 8-10], 14B0540-08[BF-2 10-12], 14B0540-09[DUP-1], 14B0540-11[BF-3 4-6], 14B0540-16[BF-4 4-6], 14B0540-17[BF-4 6-8], 14B0540-18[BF-4 8-10]

39 Spruce Street * East Longmeadow, MA 01028 * FAX 413/525-6405 * TEL. 413/525-2332

The results of analyses reported only relate to samples submitted to the Con-Test Analytical Laboratory for testing.
I certify that the analyses listed above, unless specifically listed as subcontracted, if any, were performed under my direction according to the approved methodologies listed in this document, and that based upon my inquiry of those individuals immediately responsible for obtaining the information, the material contained in this report is, to the best of my knowledge and belief, accurate and complete.

Meghan E. Kelley
Project Chemist

con-test® ANALYTICAL LABORATORY

39 Spruce Street * East Longmeadow, MA 01028 * FAX 413/525-6405 * TEL. 413/525-2332

Project Location: NBHS Mechanical Room., New B Sample Description: Work Order: 14B0540

Date Received: 2/20/2014

Field Sample #: BF-1 2-4 Sampled: 2/18/2014 12:10

Sample ID: 14B0540-01

Sample Matrix: Soil

Sample Flags: O-32

Polychlorinated Biphenyls with 3540 Soxhlet Extraction

Analyte	Results	RL	Units	Dilution	Flag/Qual	Method	Date Prepared	Date/Time Analyzed	Analyst
Aroclor-1016 [1]	ND	0.11	mg/Kg dry	5		SW-846 8082A	2/20/14	2/25/14 19:27	MJC
Aroclor-1221 [1]	ND	0.11	mg/Kg dry	5		SW-846 8082A	2/20/14	2/25/14 19:27	MJC
Aroclor-1232 [1]	ND	0.11	mg/Kg dry	5		SW-846 8082A	2/20/14	2/25/14 19:27	MJC
Aroclor-1242 [1]	ND	0.11	mg/Kg dry	5		SW-846 8082A	2/20/14	2/25/14 19:27	MJC
Aroclor-1248 [1]	ND	0.11	mg/Kg dry	5		SW-846 8082A	2/20/14	2/25/14 19:27	MJC
Aroclor-1254 [1]	ND	0.11	mg/Kg dry	5		SW-846 8082A	2/20/14	2/25/14 19:27	MJC
Aroclor-1260 [1]	ND	0.11	mg/Kg dry	5		SW-846 8082A	2/20/14	2/25/14 19:27	MJC
Aroclor-1262 [1]	ND	0.11	mg/Kg dry	5		SW-846 8082A	2/20/14	2/25/14 19:27	MJC
Aroclor-1268 [1]	ND	0.11	mg/Kg dry	5		SW-846 8082A	2/20/14	2/25/14 19:27	MJC

Surrogates	% Recovery	Recovery Limits	Flag/Qual	
Decachlorobiphenyl [1]	109	30-150		2/25/14 19:27
Decachlorobiphenyl [2]	125	30-150		2/25/14 19:27
Tetrachloro-m-xylene [1]	98.4	30-150		2/25/14 19:27
Tetrachloro-m-xylene [2]	105	30-150		2/25/14 19:27

39 Spruce Street * East Longmeadow, MA 01028 * FAX 413/525-6405 * TEL. 413/525-2332

Project Location: NBHS Mechanical Room., New B Sample Description: Work Order: 14B0540

Date Received: 2/20/2014

Field Sample #: BF-1 2-4 Sampled: 2/18/2014 12:10

Sample ID: 14B0540-01

Sample Matrix: Soil

Conventional Chemistry Parameters by EPA/APHA/SW-846 Methods (Total)

Analyte	Results	RL	Units	Dilution	Flag/Qual	Method	Date Prepared	Date/Time Analyzed	Analyst
% Solids	91.2		% Wt	1		SM 2540G	2/26/14	2/27/14 7:47	MXG

con-test® ANALYTICAL LABORATORY

39 Spruce Street * East Longmeadow, MA 01028 * FAX 413/525-6405 * TEL. 413/525-2332

Project Location: NBHS Mechanical Room., New B Sample Description: Work Order: 14B0540

Date Received: 2/20/2014

Field Sample #: BF-1 4-6 Sampled: 2/18/2014 12:20

Sample ID: 14B0540-02

Sample Matrix: Soil

Polychlorinated Biphenyls with 3540 Soxhlet Extraction

Analyte	Results	RL	Units	Dilution	Flag/Qual	Method	Date Prepared	Date/Time Analyzed	Analyst
Aroclor-1016 [1]	ND	2.1	mg/Kg dry	100		SW-846 8082A	2/20/14	2/25/14 19:40	MJC
Aroclor-1221 [1]	ND	2.1	mg/Kg dry	100		SW-846 8082A	2/20/14	2/25/14 19:40	MJC
Aroclor-1232 [1]	ND	2.1	mg/Kg dry	100		SW-846 8082A	2/20/14	2/25/14 19:40	MJC
Aroclor-1242 [1]	ND	2.1	mg/Kg dry	100		SW-846 8082A	2/20/14	2/25/14 19:40	MJC
Aroclor-1248 [1]	ND	2.1	mg/Kg dry	100		SW-846 8082A	2/20/14	2/25/14 19:40	MJC
Aroclor-1254 [2]	8.5	2.1	mg/Kg dry	100	O-03	SW-846 8082A	2/20/14	2/25/14 19:40	MJC
Aroclor-1260 [1]	ND	2.1	mg/Kg dry	100		SW-846 8082A	2/20/14	2/25/14 19:40	MJC
Aroclor-1262 [1]	ND	2.1	mg/Kg dry	100		SW-846 8082A	2/20/14	2/25/14 19:40	MJC
Aroclor-1268 [1]	ND	2.1	mg/Kg dry	100		SW-846 8082A	2/20/14	2/25/14 19:40	MJC

Surrogates	% Recovery	Recovery Limits	Flag/Qual	
Decachlorobiphenyl [1]	*	30-150	S-01	2/25/14 19:40
Decachlorobiphenyl [2]	*	30-150	S-01	2/25/14 19:40
Tetrachloro-m-xylene [1]	*	30-150	S-01	2/25/14 19:40
Tetrachloro-m-xylene [2]	*	30-150	S-01	2/25/14 19:40

39 Spruce Street * East Longmeadow, MA 01028 * FAX 413/525-6405 * TEL. 413/525-2332

Project Location: NBHS Mechanical Room., New B Sample Description: Work Order: 14B0540

Date Received: 2/20/2014

Field Sample #: BF-1 4-6 Sampled: 2/18/2014 12:20

Sample ID: 14B0540-02

Sample Matrix: Soil

Conventional Chemistry Parameters by EPA/APHA/SW-846 Methods (Total)

Analyte	Results	RL	Units	Dilution	Flag/Qual	Method	Date Prepared	Date/Time Analyzed	Analyst
% Solids	89.6		% Wt	1		SM 2540G	2/26/14	2/27/14 7:47	MXG

39 Spruce Street * East Longmeadow, MA 01028 * FAX 413/525-6405 * TEL. 413/525-2332

Project Location: NBHS Mechanical Room., New B Sample Description: Work Order: 14B0540

Date Received: 2/20/2014

Field Sample #: BF-1 6-8 Sampled: 2/18/2014 12:30

Sample ID: 14B0540-03

Sample Matrix: Soil

Sample Flags: O-32

Polychlorinated Biphenyls with 3540 Soxhlet Extraction

Analyte	Results	RL	Units	Dilution	Flag/Qual	Method	Date Prepared	Date/Time Analyzed	Analyst
Aroclor-1016 [1]	ND	0.12	mg/Kg dry	5		SW-846 8082A	2/20/14	2/25/14 19:52	MJC
Aroclor-1221 [1]	ND	0.12	mg/Kg dry	5		SW-846 8082A	2/20/14	2/25/14 19:52	MJC
Aroclor-1232 [1]	ND	0.12	mg/Kg dry	5		SW-846 8082A	2/20/14	2/25/14 19:52	MJC
Aroclor-1242 [1]	ND	0.12	mg/Kg dry	5		SW-846 8082A	2/20/14	2/25/14 19:52	MJC
Aroclor-1248 [1]	ND	0.12	mg/Kg dry	5		SW-846 8082A	2/20/14	2/25/14 19:52	MJC
Aroclor-1254 [1]	ND	0.12	mg/Kg dry	5		SW-846 8082A	2/20/14	2/25/14 19:52	MJC
Aroclor-1260 [1]	ND	0.12	mg/Kg dry	5		SW-846 8082A	2/20/14	2/25/14 19:52	MJC
Aroclor-1262 [1]	ND	0.12	mg/Kg dry	5		SW-846 8082A	2/20/14	2/25/14 19:52	MJC
Aroclor-1268 [1]	ND	0.12	mg/Kg dry	5		SW-846 8082A	2/20/14	2/25/14 19:52	MJC

Surrogates	% Recovery	Recovery Limits	Flag/Qual	
Decachlorobiphenyl [1]	99.7	30-150		2/25/14 19:52
Decachlorobiphenyl [2]	115	30-150		2/25/14 19:52
Tetrachloro-m-xylene [1]	99.8	30-150		2/25/14 19:52
Tetrachloro-m-xylene [2]	107	30-150		2/25/14 19:52

39 Spruce Street * East Longmeadow, MA 01028 * FAX 413/525-6405 * TEL. 413/525-2332

Project Location: NBHS Mechanical Room., New B Sample Description: Work Order: 14B0540

Date Received: 2/20/2014

Field Sample #: BF-1 6-8 Sampled: 2/18/2014 12:30

Sample ID: 14B0540-03

Sample Matrix: Soil

Conventional Chemistry Parameters by EPA/APHA/SW-846 Methods (Total)

Analyte	Results	RL	Units	Dilution	Flag/Qual	Method	Date Prepared	Date/Time Analyzed	Analyst
% Solids	84.3		% Wt	1		SM 2540G	2/26/14	2/27/14 7:47	MXG

con-test® ANALYTICAL LABORATORY

39 Spruce Street * East Longmeadow, MA 01028 * FAX 413/525-6405 * TEL. 413/525-2332

Project Location: NBHS Mechanical Room., New B Sample Description: Work Order: 14B0540

Date Received: 2/20/2014

Field Sample #: BF-2 2-4 Sampled: 2/18/2014 13:40

Sample ID: 14B0540-04

Sample Matrix: Soil

Polychlorinated Biphenyls with 3540 Soxhlet Extraction

Analyte	Results	RL	Units	Dilution	Flag/Qual	Method	Date Prepared	Date/Time Analyzed	Analyst
Aroclor-1016 [1]	ND	0.11	mg/Kg dry	5		SW-846 8082A	2/20/14	2/25/14 20:05	MJC
Aroclor-1221 [1]	ND	0.11	mg/Kg dry	5		SW-846 8082A	2/20/14	2/25/14 20:05	MJC
Aroclor-1232 [1]	ND	0.11	mg/Kg dry	5		SW-846 8082A	2/20/14	2/25/14 20:05	MJC
Aroclor-1242 [1]	ND	0.11	mg/Kg dry	5		SW-846 8082A	2/20/14	2/25/14 20:05	MJC
Aroclor-1248 [1]	ND	0.11	mg/Kg dry	5		SW-846 8082A	2/20/14	2/25/14 20:05	MJC
Aroclor-1254 [2]	0.11	0.11	mg/Kg dry	5		SW-846 8082A	2/20/14	2/25/14 20:05	MJC
Aroclor-1260 [1]	ND	0.11	mg/Kg dry	5		SW-846 8082A	2/20/14	2/25/14 20:05	MJC
Aroclor-1262 [1]	ND	0.11	mg/Kg dry	5		SW-846 8082A	2/20/14	2/25/14 20:05	MJC
Aroclor-1268 [1]	ND	0.11	mg/Kg dry	5		SW-846 8082A	2/20/14	2/25/14 20:05	MJC

Surrogates	% Recovery	Recovery Limits	Flag/Qual	
Decachlorobiphenyl [1]	105	30-150		2/25/14 20:05
Decachlorobiphenyl [2]	120	30-150		2/25/14 20:05
Tetrachloro-m-xylene [1]	90.3	30-150		2/25/14 20:05
Tetrachloro-m-xylene [2]	96.8	30-150		2/25/14 20:05

39 Spruce Street * East Longmeadow, MA 01028 * FAX 413/525-6405 * TEL. 413/525-2332

Project Location: NBHS Mechanical Room., New B Sample Description: Work Order: 14B0540

Date Received: 2/20/2014

Field Sample #: BF-2 2-4 Sampled: 2/18/2014 13:40

Sample ID: 14B0540-04

Sample Matrix: Soil

Conventional Chemistry Parameters by EPA/APHA/SW-846 Methods (Total)

Analyte	Results	RL	Units	Dilution	Flag/Qual	Method	Date Prepared	Date/Time Analyzed	Analyst
% Solids	87.0		% Wt	1		SM 2540G	2/26/14	2/27/14 7:47	MXG

con-test® ANALYTICAL LABORATORY

39 Spruce Street * East Longmeadow, MA 01028 * FAX 413/525-6405 * TEL. 413/525-2332

Project Location: NBHS Mechanical Room., New B Sample Description: Work Order: 14B0540

Date Received: 2/20/2014

Field Sample #: BF-2 4-6 Sampled: 2/18/2014 13:50

Sample ID: 14B0540-05

Sample Matrix: Soil

Sample Flags: O-32

Polychlorinated Biphenyls with 3540 Soxhlet Extraction

Analyte	Results	RL	Units	Dilution	Flag/Qual	Method	Date Prepared	Date/Time Analyzed	Analyst
Aroclor-1016 [1]	ND	0.10	mg/Kg dry	5		SW-846 8082A	2/20/14	2/25/14 20:18	MJC
Aroclor-1221 [1]	ND	0.10	mg/Kg dry	5		SW-846 8082A	2/20/14	2/25/14 20:18	MJC
Aroclor-1232 [1]	ND	0.10	mg/Kg dry	5		SW-846 8082A	2/20/14	2/25/14 20:18	MJC
Aroclor-1242 [1]	ND	0.10	mg/Kg dry	5		SW-846 8082A	2/20/14	2/25/14 20:18	MJC
Aroclor-1248 [1]	ND	0.10	mg/Kg dry	5		SW-846 8082A	2/20/14	2/25/14 20:18	MJC
Aroclor-1254 [1]	ND	0.10	mg/Kg dry	5		SW-846 8082A	2/20/14	2/25/14 20:18	MJC
Aroclor-1260 [1]	ND	0.10	mg/Kg dry	5		SW-846 8082A	2/20/14	2/25/14 20:18	MJC
Aroclor-1262 [1]	ND	0.10	mg/Kg dry	5		SW-846 8082A	2/20/14	2/25/14 20:18	MJC
Aroclor-1268 [1]	ND	0.10	mg/Kg dry	5		SW-846 8082A	2/20/14	2/25/14 20:18	MJC

Surrogates	% Recovery	Recovery Limits	Flag/Qual	
Decachlorobiphenyl [1]	117	30-150		2/25/14 20:18
Decachlorobiphenyl [2]	134	30-150		2/25/14 20:18
Tetrachloro-m-xylene [1]	108	30-150		2/25/14 20:18
Tetrachloro-m-xylene [2]	115	30-150		2/25/14 20:18

39 Spruce Street * East Longmeadow, MA 01028 * FAX 413/525-6405 * TEL. 413/525-2332

Project Location: NBHS Mechanical Room., New B Sample Description: Work Order: 14B0540

Date Received: 2/20/2014

Field Sample #: BF-2 4-6 Sampled: 2/18/2014 13:50

Sample ID: 14B0540-05

Sample Matrix: Soil

Conventional Chemistry Parameters by EPA/APHA/SW-846 Methods (Total)

Analyte	Results	RL	Units	Dilution	Flag/Qual	Method	Date Prepared	Date/Time Analyzed	Analyst
% Solids	93.2		% Wt	1		SM 2540G	2/26/14	2/27/14 7:47	MXG

con-test® ANALYTICAL LABORATORY

39 Spruce Street * East Longmeadow, MA 01028 * FAX 413/525-6405 * TEL. 413/525-2332

Project Location: NBHS Mechanical Room., New B Sample Description: Work Order: 14B0540

Date Received: 2/20/2014

Field Sample #: BF-2 6-8 Sampled: 2/18/2014 14:00

Sample ID: 14B0540-06

Sample Matrix: Soil

Polychlorinated Biphenyls with 3540 Soxhlet Extraction

Analyte	Results	RL	Units	Dilution	Flag/Qual	Method	Date Prepared	Date/Time Analyzed	Analyst
Aroclor-1016 [1]	ND	89	mg/Kg dry	4000		SW-846 8082A	2/20/14	2/25/14 20:31	MJC
Aroclor-1221 [1]	ND	89	mg/Kg dry	4000		SW-846 8082A	2/20/14	2/25/14 20:31	MJC
Aroclor-1232 [1]	ND	89	mg/Kg dry	4000		SW-846 8082A	2/20/14	2/25/14 20:31	MJC
Aroclor-1242 [1]	ND	89	mg/Kg dry	4000		SW-846 8082A	2/20/14	2/25/14 20:31	MJC
Aroclor-1248 [1]	380	89	mg/Kg dry	4000		SW-846 8082A	2/20/14	2/25/14 20:31	MJC
Aroclor-1254 [2]	860	89	mg/Kg dry	4000		SW-846 8082A	2/20/14	2/25/14 20:31	MJC
Aroclor-1260 [1]	ND	89	mg/Kg dry	4000		SW-846 8082A	2/20/14	2/25/14 20:31	MJC
Aroclor-1262 [1]	ND	89	mg/Kg dry	4000		SW-846 8082A	2/20/14	2/25/14 20:31	MJC
Aroclor-1268 [1]	ND	89	mg/Kg dry	4000		SW-846 8082A	2/20/14	2/25/14 20:31	MJC

Surrogates	% Recovery	Recovery Limits	Flag/Qual	
Decachlorobiphenyl [1]	*	30-150	S-01	2/25/14 20:31
Decachlorobiphenyl [2]	*	30-150	S-01	2/25/14 20:31
Tetrachloro-m-xylene [1]	*	30-150	S-01	2/25/14 20:31
Tetrachloro-m-xylene [2]	*	30-150	S-01	2/25/14 20:31

39 Spruce Street * East Longmeadow, MA 01028 * FAX 413/525-6405 * TEL. 413/525-2332

Project Location: NBHS Mechanical Room., New B Sample Description: Work Order: 14B0540

Date Received: 2/20/2014

Field Sample #: BF-2 6-8 Sampled: 2/18/2014 14:00

Sample ID: 14B0540-06

Sample Matrix: Soil

Conventional Chemistry Parameters by EPA/APHA/SW-846 Methods (Total)

Analyte	Results	RL	Units	Dilution	Flag/Qual	Method	Date Prepared	Date/Time Analyzed	Analyst
% Solids	88.9		% Wt	1		SM 2540G	2/26/14	2/27/14 7:47	MXG

con-test® ANALYTICAL LABORATORY

39 Spruce Street * East Longmeadow, MA 01028 * FAX 413/525-6405 * TEL. 413/525-2332

Project Location: NBHS Mechanical Room., New B Sample Description: Work Order: 14B0540

Date Received: 2/20/2014

Field Sample #: BF-2 8-10 Sampled: 2/18/2014 14:10

Sample ID: 14B0540-07

Sample Matrix: Soil

Polychlorinated Biphenyls with 3540 Soxhlet Extraction

Analyte	Results	RL	Units	Dilution	Flag/Qual	Method	Date Prepared	Date/Time Analyzed	Analyst
Aroclor-1016 [1]	ND	45	mg/Kg dry	2000		SW-846 8082A	2/20/14	2/25/14 20:44	MJC
Aroclor-1221 [1]	ND	45	mg/Kg dry	2000		SW-846 8082A	2/20/14	2/25/14 20:44	MJC
Aroclor-1232 [1]	ND	45	mg/Kg dry	2000		SW-846 8082A	2/20/14	2/25/14 20:44	MJC
Aroclor-1242 [1]	ND	45	mg/Kg dry	2000		SW-846 8082A	2/20/14	2/25/14 20:44	MJC
Aroclor-1248 [2]	130	45	mg/Kg dry	2000		SW-846 8082A	2/20/14	2/25/14 20:44	MJC
Aroclor-1254 [2]	310	45	mg/Kg dry	2000		SW-846 8082A	2/20/14	2/25/14 20:44	MJC
Aroclor-1260 [1]	ND	45	mg/Kg dry	2000		SW-846 8082A	2/20/14	2/25/14 20:44	MJC
Aroclor-1262 [1]	ND	45	mg/Kg dry	2000		SW-846 8082A	2/20/14	2/25/14 20:44	MJC
Aroclor-1268 [1]	ND	45	mg/Kg dry	2000		SW-846 8082A	2/20/14	2/25/14 20:44	MJC

Surrogates	% Recovery	Recovery Limits	Flag/Qual	
Decachlorobiphenyl [1]	*	30-150	S-01	2/25/14 20:44
Decachlorobiphenyl [2]	*	30-150	S-01	2/25/14 20:44
Tetrachloro-m-xylene [1]	*	30-150	S-01	2/25/14 20:44
Tetrachloro-m-xylene [2]	*	30-150	S-01	2/25/14 20:44

39 Spruce Street * East Longmeadow, MA 01028 * FAX 413/525-6405 * TEL. 413/525-2332

Project Location: NBHS Mechanical Room., New B Sample Description: Work Order: 14B0540

Date Received: 2/20/2014

Field Sample #: BF-2 8-10 Sampled: 2/18/2014 14:10

Sample ID: 14B0540-07

Sample Matrix: Soil

Conventional Chemistry Parameters by EPA/APHA/SW-846 Methods (Total)

Analyte	Results	RL	Units	Dilution	Flag/Qual	Method	Date Prepared	Date/Time Analyzed	Analyst
% Solids	86.5		% Wt	1		SM 2540G	2/26/14	2/27/14 7:47	MXG

39 Spruce Street * East Longmeadow, MA 01028 * FAX 413/525-6405 * TEL. 413/525-2332

Project Location: NBHS Mechanical Room., New B Sample Description: Work Order: 14B0540

Date Received: 2/20/2014

Field Sample #: BF-2 10-12 Sampled: 2/18/2014 14:20

Sample ID: 14B0540-08

Sample Matrix: Soil

Polychlorinated Biphenyls with 3540 Soxhlet Extraction

Analyte	Results	RL	Units	Dilution	Flag/Qual	Method	Date Prepared	Date/Time Analyzed	Analyst
Aroclor-1016 [1]	ND	11	mg/Kg dry	500		SW-846 8082A	2/20/14	2/25/14 20:57	MJC
Aroclor-1221 [1]	ND	11	mg/Kg dry	500		SW-846 8082A	2/20/14	2/25/14 20:57	MJC
Aroclor-1232 [1]	ND	11	mg/Kg dry	500		SW-846 8082A	2/20/14	2/25/14 20:57	MJC
Aroclor-1242 [1]	ND	11	mg/Kg dry	500		SW-846 8082A	2/20/14	2/25/14 20:57	MJC
Aroclor-1248 [2]	35	11	mg/Kg dry	500		SW-846 8082A	2/20/14	2/25/14 20:57	MJC
Aroclor-1254 [2]	94	11	mg/Kg dry	500		SW-846 8082A	2/20/14	2/25/14 20:57	MJC
Aroclor-1260 [1]	ND	11	mg/Kg dry	500		SW-846 8082A	2/20/14	2/25/14 20:57	MJC
Aroclor-1262 [1]	ND	11	mg/Kg dry	500		SW-846 8082A	2/20/14	2/25/14 20:57	MJC
Aroclor-1268 [1]	ND	11	mg/Kg dry	500		SW-846 8082A	2/20/14	2/25/14 20:57	MJC

Surrogates	% Recovery	Recovery Limits	Flag/Qual	
Decachlorobiphenyl [1]	*	30-150	S-01	2/25/14 20:57
Decachlorobiphenyl [2]	*	30-150	S-01	2/25/14 20:57
Tetrachloro-m-xylene [1]	*	30-150	S-01	2/25/14 20:57
Tetrachloro-m-xylene [2]	*	30-150	S-01	2/25/14 20:57

39 Spruce Street * East Longmeadow, MA 01028 * FAX 413/525-6405 * TEL. 413/525-2332

Project Location: NBHS Mechanical Room., New B Sample Description: Work Order: 14B0540

Date Received: 2/20/2014

Field Sample #: BF-2 10-12 Sampled: 2/18/2014 14:20

Sample ID: 14B0540-08

Sample Matrix: Soil

Conventional Chemistry Parameters by EPA/APHA/SW-846 Methods (Total)

Analyte	Results	RL	Units	Dilution	Flag/Qual	Method	Date Prepared	Date/Time Analyzed	Analyst
% Solids	85.7		% Wt	1		SM 2540G	2/26/14	2/27/14 7:47	MXG

39 Spruce Street * East Longmeadow, MA 01028 * FAX 413/525-6405 * TEL. 413/525-2332

Project Location: NBHS Mechanical Room., New B Sample Description: Work Order: 14B0540

Date Received: 2/20/2014

Field Sample #: DUP-1 Sampled: 2/18/2014 00:00

Sample ID: 14B0540-09

Sample Matrix: Soil

Polychlorinated Biphenyls with 3540 Soxhlet Extraction

Analyte	Results	RL	Units	Dilution	Flag/Qual	Method	Date Prepared	Date/Time Analyzed	Analyst
Aroclor-1016 [1]	ND	44	mg/Kg dry	2000		SW-846 8082A	2/20/14	2/25/14 21:09	MJC
Aroclor-1221 [1]	ND	44	mg/Kg dry	2000		SW-846 8082A	2/20/14	2/25/14 21:09	MJC
Aroclor-1232 [1]	ND	44	mg/Kg dry	2000		SW-846 8082A	2/20/14	2/25/14 21:09	MJC
Aroclor-1242 [1]	ND	44	mg/Kg dry	2000		SW-846 8082A	2/20/14	2/25/14 21:09	MJC
Aroclor-1248 [1]	120	44	mg/Kg dry	2000		SW-846 8082A	2/20/14	2/25/14 21:09	MJC
Aroclor-1254 [2]	270	44	mg/Kg dry	2000		SW-846 8082A	2/20/14	2/25/14 21:09	MJC
Aroclor-1260 [1]	ND	44	mg/Kg dry	2000		SW-846 8082A	2/20/14	2/25/14 21:09	MJC
Aroclor-1262 [1]	ND	44	mg/Kg dry	2000		SW-846 8082A	2/20/14	2/25/14 21:09	MJC
Aroclor-1268 [1]	ND	44	mg/Kg dry	2000		SW-846 8082A	2/20/14	2/25/14 21:09	MJC

Surrogates	% Recovery	Recovery Limits	Flag/Qual	
Decachlorobiphenyl [1]	*	30-150	S-01	2/25/14 21:09
Decachlorobiphenyl [2]	*	30-150	S-01	2/25/14 21:09
Tetrachloro-m-xylene [1]	*	30-150	S-01	2/25/14 21:09
Tetrachloro-m-xylene [2]	*	30-150	S-01	2/25/14 21:09

39 Spruce Street * East Longmeadow, MA 01028 * FAX 413/525-6405 * TEL. 413/525-2332

Project Location: NBHS Mechanical Room., New B Sample Description: Work Order: 14B0540

Date Received: 2/20/2014

Field Sample #: DUP-1 Sampled: 2/18/2014 00:00

Sample ID: 14B0540-09

Sample Matrix: Soil

Conventional Chemistry Parameters by EPA/APHA/SW-846 Methods (Total)

Analyte	Results	RL	Units	Dilution	Flag/Qual	Method	Date Prepared	Date/Time Analyzed	Analyst
% Solids	88.4		% Wt	1		SM 2540G	2/26/14	2/27/14 7:47	MXG

con-test® ANALYTICAL LABORATORY
39 Spruce Street * East Longmeadow, MA 01028 * FAX 413/525-6405 * TEL. 413/525-2332

Project Location: NBHS Mechanical Room., New B Sample Description: Work Order: 14B0540

Date Received: 2/20/2014

Field Sample #: BF-3 2-4 Sampled: 2/19/2014 09:20

Sample ID: 14B0540-10

Sample Matrix: Soil

Sample Flags: O-32

Polychlorinated Biphenyls with 3540 Soxhlet Extraction

Analyte	Results	RL	Units	Dilution	Flag/Qual	Method	Date Prepared	Date/Time Analyzed	Analyst
Aroclor-1016 [1]	ND	0.11	mg/Kg dry	5		SW-846 8082A	2/20/14	2/25/14 21:22	MJC
Aroclor-1221 [1]	ND	0.11	mg/Kg dry	5		SW-846 8082A	2/20/14	2/25/14 21:22	MJC
Aroclor-1232 [1]	ND	0.11	mg/Kg dry	5		SW-846 8082A	2/20/14	2/25/14 21:22	MJC
Aroclor-1242 [1]	ND	0.11	mg/Kg dry	5		SW-846 8082A	2/20/14	2/25/14 21:22	MJC
Aroclor-1248 [1]	ND	0.11	mg/Kg dry	5		SW-846 8082A	2/20/14	2/25/14 21:22	MJC
Aroclor-1254 [1]	ND	0.11	mg/Kg dry	5		SW-846 8082A	2/20/14	2/25/14 21:22	MJC
Aroclor-1260 [1]	ND	0.11	mg/Kg dry	5		SW-846 8082A	2/20/14	2/25/14 21:22	MJC
Aroclor-1262 [1]	ND	0.11	mg/Kg dry	5		SW-846 8082A	2/20/14	2/25/14 21:22	MJC
Aroclor-1268 [1]	ND	0.11	mg/Kg dry	5		SW-846 8082A	2/20/14	2/25/14 21:22	MJC

Surrogates	% Recovery	Recovery Limits	Flag/Qual	
Decachlorobiphenyl [1]	124	30-150		2/25/14 21:22
Decachlorobiphenyl [2]	142	30-150		2/25/14 21:22
Tetrachloro-m-xylene [1]	116	30-150		2/25/14 21:22
Tetrachloro-m-xylene [2]	125	30-150		2/25/14 21:22

39 Spruce Street * East Longmeadow, MA 01028 * FAX 413/525-6405 * TEL. 413/525-2332

Project Location: NBHS Mechanical Room., New B Sample Description: Work Order: 14B0540

Date Received: 2/20/2014

Field Sample #: BF-3 2-4 Sampled: 2/19/2014 09:20

Sample ID: 14B0540-10

Sample Matrix: Soil

Conventional Chemistry Parameters by EPA/APHA/SW-846 Methods (Total)

Analyte	Results	RL	Units	Dilution	Flag/Qual	Method	Date Prepared	Date/Time Analyzed	Analyst
% Solids	92.3		% Wt	1		SM 2540G	2/26/14	2/27/14 7:47	MXG

39 Spruce Street * East Longmeadow, MA 01028 * FAX 413/525-6405 * TEL. 413/525-2332

Project Location: NBHS Mechanical Room., New B Sample Description: Work Order: 14B0540

Date Received: 2/20/2014

Field Sample #: BF-3 4-6 Sampled: 2/19/2014 09:40

Sample ID: 14B0540-11

Sample Matrix: Soil

Polychlorinated Biphenyls with 3540 Soxhlet Extraction

Analyte	Results	RL	Units	Dilution	Flag/Qual	Method	Date Prepared	Date/Time Analyzed	Analyst
Aroclor-1016 [1]	ND	2.1	mg/Kg dry	100		SW-846 8082A	2/20/14	2/25/14 22:01	MJC
Aroclor-1221 [1]	ND	2.1	mg/Kg dry	100		SW-846 8082A	2/20/14	2/25/14 22:01	MJC
Aroclor-1232 [1]	ND	2.1	mg/Kg dry	100		SW-846 8082A	2/20/14	2/25/14 22:01	MJC
Aroclor-1242 [1]	ND	2.1	mg/Kg dry	100		SW-846 8082A	2/20/14	2/25/14 22:01	MJC
Aroclor-1248 [1]	ND	2.1	mg/Kg dry	100		SW-846 8082A	2/20/14	2/25/14 22:01	MJC
Aroclor-1254 [2]	14	2.1	mg/Kg dry	100	O-03	SW-846 8082A	2/20/14	2/25/14 22:01	MJC
Aroclor-1260 [1]	ND	2.1	mg/Kg dry	100		SW-846 8082A	2/20/14	2/25/14 22:01	MJC
Aroclor-1262 [1]	ND	2.1	mg/Kg dry	100		SW-846 8082A	2/20/14	2/25/14 22:01	MJC
Aroclor-1268 [1]	ND	2.1	mg/Kg dry	100		SW-846 8082A	2/20/14	2/25/14 22:01	MJC

Surrogates	% Recovery	Recovery Limits	Flag/Qual	
Decachlorobiphenyl [1]	*	30-150	S-01	2/25/14 22:01
Decachlorobiphenyl [2]	*	30-150	S-01	2/25/14 22:01
Tetrachloro-m-xylene [1]	*	30-150	S-01	2/25/14 22:01
Tetrachloro-m-xylene [2]	*	30-150	S-01	2/25/14 22:01

39 Spruce Street * East Longmeadow, MA 01028 * FAX 413/525-6405 * TEL. 413/525-2332

Project Location: NBHS Mechanical Room., New B Sample Description: Work Order: 14B0540

Date Received: 2/20/2014

Field Sample #: BF-3 4-6 Sampled: 2/19/2014 09:40

Sample ID: 14B0540-11

Sample Matrix: Soil

Conventional Chemistry Parameters by EPA/APHA/SW-846 Methods (Total)

Analyte	Results	RL	Units	Dilution	Flag/Qual	Method	Date Prepared	Date/Time Analyzed	Analyst
% Solids	92.9		% Wt	1		SM 2540G	2/26/14	2/27/14 7:47	MXG

con-test® ANALYTICAL LABORATORY

39 Spruce Street * East Longmeadow, MA 01028 * FAX 413/525-6405 * TEL. 413/525-2332

Project Location: NBHS Mechanical Room., New B Sample Description: Work Order: 14B0540

Date Received: 2/20/2014

Field Sample #: BF-3 6-8 Sampled: 2/19/2014 09:50

Sample ID: 14B0540-12

Sample Matrix: Soil

Polychlorinated Biphenyls with 3540 Soxhlet Extraction

Analyte	Results	RL	Units	Dilution	Flag/Qual	Method	Date Prepared	Date/Time Analyzed	Analyst
Aroclor-1016 [1]	ND	0.11	mg/Kg dry	5		SW-846 8082A	2/20/14	2/25/14 22:14	MJC
Aroclor-1221 [1]	ND	0.11	mg/Kg dry	5		SW-846 8082A	2/20/14	2/25/14 22:14	MJC
Aroclor-1232 [1]	ND	0.11	mg/Kg dry	5		SW-846 8082A	2/20/14	2/25/14 22:14	MJC
Aroclor-1242 [1]	ND	0.11	mg/Kg dry	5		SW-846 8082A	2/20/14	2/25/14 22:14	MJC
Aroclor-1248 [1]	ND	0.11	mg/Kg dry	5		SW-846 8082A	2/20/14	2/25/14 22:14	MJC
Aroclor-1254 [2]	0.34	0.11	mg/Kg dry	5	O-03	SW-846 8082A	2/20/14	2/25/14 22:14	MJC
Aroclor-1260 [1]	ND	0.11	mg/Kg dry	5		SW-846 8082A	2/20/14	2/25/14 22:14	MJC
Aroclor-1262 [1]	ND	0.11	mg/Kg dry	5		SW-846 8082A	2/20/14	2/25/14 22:14	MJC
Aroclor-1268 [1]	ND	0.11	mg/Kg dry	5		SW-846 8082A	2/20/14	2/25/14 22:14	MJC

Surrogates	% Recovery	Recovery Limits	Flag/Qual	
Decachlorobiphenyl [1]	105	30-150		2/25/14 22:14
Decachlorobiphenyl [2]	119	30-150		2/25/14 22:14
Tetrachloro-m-xylene [1]	103	30-150		2/25/14 22:14
Tetrachloro-m-xylene [2]	110	30-150		2/25/14 22:14

39 Spruce Street * East Longmeadow, MA 01028 * FAX 413/525-6405 * TEL. 413/525-2332

Project Location: NBHS Mechanical Room., New B Sample Description: Work Order: 14B0540

Date Received: 2/20/2014

Field Sample #: BF-3 6-8 Sampled: 2/19/2014 09:50

Sample ID: 14B0540-12

Sample Matrix: Soil

Conventional Chemistry Parameters by EPA/APHA/SW-846 Methods (Total)

Analyte	Results	RL	Units	Dilution	Flag/Qual	Method	Date Prepared	Date/Time Analyzed	Analyst
% Solids	85.6		% Wt	1		SM 2540G	2/26/14	2/27/14 7:47	MXG

con-test® ANALYTICAL LABORATORY
39 Spruce Street * East Longmeadow, MA 01028 * FAX 413/525-6405 * TEL. 413/525-2332

Project Location: NBHS Mechanical Room., New B Sample Description: Work Order: 14B0540

Date Received: 2/20/2014

Field Sample #: BF-3 8-10 Sampled: 2/19/2014 10:10

Sample ID: 14B0540-13

Sample Matrix: Soil

Sample Flags: O-32

Polychlorinated Biphenyls with 3540 Soxhlet Extraction

Analyte	Results	RL	Units	Dilution	Flag/Qual	Method	Date Prepared	Date/Time Analyzed	Analyst
Aroclor-1016 [1]	ND	0.11	mg/Kg dry	5		SW-846 8082A	2/20/14	2/25/14 22:26	MJC
Aroclor-1221 [1]	ND	0.11	mg/Kg dry	5		SW-846 8082A	2/20/14	2/25/14 22:26	MJC
Aroclor-1232 [1]	ND	0.11	mg/Kg dry	5		SW-846 8082A	2/20/14	2/25/14 22:26	MJC
Aroclor-1242 [1]	ND	0.11	mg/Kg dry	5		SW-846 8082A	2/20/14	2/25/14 22:26	MJC
Aroclor-1248 [1]	ND	0.11	mg/Kg dry	5		SW-846 8082A	2/20/14	2/25/14 22:26	MJC
Aroclor-1254 [1]	ND	0.11	mg/Kg dry	5		SW-846 8082A	2/20/14	2/25/14 22:26	MJC
Aroclor-1260 [1]	ND	0.11	mg/Kg dry	5		SW-846 8082A	2/20/14	2/25/14 22:26	MJC
Aroclor-1262 [1]	ND	0.11	mg/Kg dry	5		SW-846 8082A	2/20/14	2/25/14 22:26	MJC
Aroclor-1268 [1]	ND	0.11	mg/Kg dry	5		SW-846 8082A	2/20/14	2/25/14 22:26	MJC

Surrogates	% Recovery	Recovery Limits	Flag/Qual	
Decachlorobiphenyl [1]	104	30-150		2/25/14 22:26
Decachlorobiphenyl [2]	118	30-150		2/25/14 22:26
Tetrachloro-m-xylene [1]	75.2	30-150		2/25/14 22:26
Tetrachloro-m-xylene [2]	80.5	30-150		2/25/14 22:26

39 Spruce Street * East Longmeadow, MA 01028 * FAX 413/525-6405 * TEL. 413/525-2332

Project Location: NBHS Mechanical Room., New B Sample Description: Work Order: 14B0540

Date Received: 2/20/2014

Field Sample #: BF-3 8-10 Sampled: 2/19/2014 10:10

Sample ID: 14B0540-13

Sample Matrix: Soil

Conventional Chemistry Parameters by EPA/APHA/SW-846 Methods (Total)

Analyte	Results	RL	Units	Dilution	Flag/Qual	Method	Date Prepared	Date/Time Analyzed	Analyst
% Solids	84.6		% Wt	1		SM 2540G	2/26/14	2/27/14 7:47	MXG

39 Spruce Street * East Longmeadow, MA 01028 * FAX 413/525-6405 * TEL. 413/525-2332

Project Location: NBHS Mechanical Room., New B Sample Description: Work Order: 14B0540

Date Received: 2/20/2014

Field Sample #: BF-3 10-12 Sampled: 2/19/2014 10:20

Sample ID: 14B0540-14

Sample Matrix: Soil

Sample Flags: O-32

Polychlorinated Biphenyls with 3540 Soxhlet Extraction

Analyte	Results	RL	Units	Dilution	Flag/Qual	Method	Date Prepared	Date/Time Analyzed	Analyst
Aroclor-1016 [1]	ND	0.11	mg/Kg dry	5		SW-846 8082A	2/20/14	2/25/14 22:39	MJC
Aroclor-1221 [1]	ND	0.11	mg/Kg dry	5		SW-846 8082A	2/20/14	2/25/14 22:39	MJC
Aroclor-1232 [1]	ND	0.11	mg/Kg dry	5		SW-846 8082A	2/20/14	2/25/14 22:39	MJC
Aroclor-1242 [1]	ND	0.11	mg/Kg dry	5		SW-846 8082A	2/20/14	2/25/14 22:39	MJC
Aroclor-1248 [1]	ND	0.11	mg/Kg dry	5		SW-846 8082A	2/20/14	2/25/14 22:39	MJC
Aroclor-1254 [1]	ND	0.11	mg/Kg dry	5		SW-846 8082A	2/20/14	2/25/14 22:39	MJC
Aroclor-1260 [1]	ND	0.11	mg/Kg dry	5		SW-846 8082A	2/20/14	2/25/14 22:39	MJC
Aroclor-1262 [1]	ND	0.11	mg/Kg dry	5		SW-846 8082A	2/20/14	2/25/14 22:39	MJC
Aroclor-1268 [1]	ND	0.11	mg/Kg dry	5		SW-846 8082A	2/20/14	2/25/14 22:39	MJC

Surrogates	% Recovery	Recovery Limits	Flag/Qual	
Decachlorobiphenyl [1]	125	30-150		2/25/14 22:39
Decachlorobiphenyl [2]	142	30-150		2/25/14 22:39
Tetrachloro-m-xylene [1]	108	30-150		2/25/14 22:39
Tetrachloro-m-xylene [2]	116	30-150		2/25/14 22:39

39 Spruce Street * East Longmeadow, MA 01028 * FAX 413/525-6405 * TEL. 413/525-2332

Project Location: NBHS Mechanical Room., New B Sample Description: Work Order: 14B0540

Date Received: 2/20/2014

Field Sample #: BF-3 10-12 Sampled: 2/19/2014 10:20

Sample ID: 14B0540-14

Sample Matrix: Soil

Conventional Chemistry Parameters by EPA/APHA/SW-846 Methods (Total)

Analyte	Results	RL	Units	Dilution	Flag/Qual	Method	Date Prepared	Date/Time Analyzed	Analyst
% Solids	84.3		% Wt	1		SM 2540G	2/26/14	2/27/14 7:47	MXG

39 Spruce Street * East Longmeadow, MA 01028 * FAX 413/525-6405 * TEL. 413/525-2332

Project Location: NBHS Mechanical Room., New B Sample Description: Work Order: 14B0540

Date Received: 2/20/2014

Field Sample #: BF-4 2-4 Sampled: 2/19/2014 11:15

Sample ID: 14B0540-15

Sample Matrix: Soil

Sample Flags: O-32

Polychlorinated Biphenyls with 3540 Soxhlet Extraction

Analyte	Results	RL	Units	Dilution	Flag/Qual	Method	Date Prepared	Date/Time Analyzed	Analyst
Aroclor-1016 [1]	ND	0.11	mg/Kg dry	5		SW-846 8082A	2/20/14	2/25/14 22:52	MJC
Aroclor-1221 [1]	ND	0.11	mg/Kg dry	5		SW-846 8082A	2/20/14	2/25/14 22:52	MJC
Aroclor-1232 [1]	ND	0.11	mg/Kg dry	5		SW-846 8082A	2/20/14	2/25/14 22:52	MJC
Aroclor-1242 [1]	ND	0.11	mg/Kg dry	5		SW-846 8082A	2/20/14	2/25/14 22:52	MJC
Aroclor-1248 [1]	ND	0.11	mg/Kg dry	5		SW-846 8082A	2/20/14	2/25/14 22:52	MJC
Aroclor-1254 [1]	ND	0.11	mg/Kg dry	5		SW-846 8082A	2/20/14	2/25/14 22:52	MJC
Aroclor-1260 [1]	ND	0.11	mg/Kg dry	5		SW-846 8082A	2/20/14	2/25/14 22:52	MJC
Aroclor-1262 [1]	ND	0.11	mg/Kg dry	5		SW-846 8082A	2/20/14	2/25/14 22:52	MJC
Aroclor-1268 [1]	ND	0.11	mg/Kg dry	5		SW-846 8082A	2/20/14	2/25/14 22:52	MJC

Surrogates	% Recovery	Recovery Limits	Flag/Qual	
Decachlorobiphenyl [1]	106	30-150		2/25/14 22:52
Decachlorobiphenyl [2]	121	30-150		2/25/14 22:52
Tetrachloro-m-xylene [1]	94.6	30-150		2/25/14 22:52
Tetrachloro-m-xylene [2]	101	30-150		2/25/14 22:52

39 Spruce Street * East Longmeadow, MA 01028 * FAX 413/525-6405 * TEL. 413/525-2332

Project Location: NBHS Mechanical Room., New B Sample Description: Work Order: 14B0540

Date Received: 2/20/2014

Field Sample #: BF-4 2-4 Sampled: 2/19/2014 11:15

Sample ID: 14B0540-15

Sample Matrix: Soil

Conventional Chemistry Parameters by EPA/APHA/SW-846 Methods (Total)

Analyte	Results	RL	Units	Dilution	Flag/Qual	Method	Date Prepared	Date/Time Analyzed	Analyst
% Solids	93.3		% Wt	1		SM 2540G	2/26/14	2/27/14 7:47	MXG

con-test® ANALYTICAL LABORATORY

39 Spruce Street * East Longmeadow, MA 01028 * FAX 413/525-6405 * TEL. 413/525-2332

Project Location: NBHS Mechanical Room., New B Sample Description: Work Order: 14B0540

Date Received: 2/20/2014

Field Sample #: BF-4 4-6 Sampled: 2/19/2014 11:30

Sample ID: 14B0540-16

Sample Matrix: Soil

Polychlorinated Biphenyls with 3540 Soxhlet Extraction

Analyte	Results	RL	Units	Dilution	Flag/Qual	Method	Date Prepared	Date/Time Analyzed	Analyst
Aroclor-1016 [1]	ND	2.1	mg/Kg dry	100		SW-846 8082A	2/20/14	2/25/14 23:05	MJC
Aroclor-1221 [1]	ND	2.1	mg/Kg dry	100		SW-846 8082A	2/20/14	2/25/14 23:05	MJC
Aroclor-1232 [1]	ND	2.1	mg/Kg dry	100		SW-846 8082A	2/20/14	2/25/14 23:05	MJC
Aroclor-1242 [1]	ND	2.1	mg/Kg dry	100		SW-846 8082A	2/20/14	2/25/14 23:05	MJC
Aroclor-1248 [1]	ND	2.1	mg/Kg dry	100		SW-846 8082A	2/20/14	2/25/14 23:05	MJC
Aroclor-1254 [2]	18	2.1	mg/Kg dry	100	O-03	SW-846 8082A	2/20/14	2/25/14 23:05	MJC
Aroclor-1260 [1]	ND	2.1	mg/Kg dry	100	R-06	SW-846 8082A	2/20/14	2/25/14 23:05	MJC
Aroclor-1262 [1]	ND	2.1	mg/Kg dry	100		SW-846 8082A	2/20/14	2/25/14 23:05	MJC
Aroclor-1268 [1]	ND	2.1	mg/Kg dry	100		SW-846 8082A	2/20/14	2/25/14 23:05	MJC

Surrogates	% Recovery	Recovery Limits	Flag/Qual	
Decachlorobiphenyl [1]	*	30-150	S-01	2/25/14 23:05
Decachlorobiphenyl [2]	*	30-150	S-01	2/25/14 23:05
Tetrachloro-m-xylene [1]	*	30-150	S-01	2/25/14 23:05
Tetrachloro-m-xylene [2]	*	30-150	S-01	2/25/14 23:05

39 Spruce Street * East Longmeadow, MA 01028 * FAX 413/525-6405 * TEL. 413/525-2332

Project Location: NBHS Mechanical Room., New B Sample Description: Work Order: 14B0540

Date Received: 2/20/2014

Field Sample #: BF-4 4-6 Sampled: 2/19/2014 11:30

Sample ID: 14B0540-16

Sample Matrix: Soil

Conventional Chemistry Parameters by EPA/APHA/SW-846 Methods (Total)

Analyte	Results	RL	Units	Dilution	Flag/Qual	Method	Date Prepared	Date/Time Analyzed	Analyst
% Solids	91.6		% Wt	1		SM 2540G	2/26/14	2/27/14 7:47	MXG

39 Spruce Street * East Longmeadow, MA 01028 * FAX 413/525-6405 * TEL. 413/525-2332

Project Location: NBHS Mechanical Room., New B Sample Description: Work Order: 14B0540

Date Received: 2/20/2014

Field Sample #: BF-4 6-8 Sampled: 2/19/2014 11:35

Sample ID: 14B0540-17

Sample Matrix: Soil

Polychlorinated Biphenyls with 3540 Soxhlet Extraction

Analyte	Results	RL	Units	Dilution	Flag/Qual	Method	Date Prepared	Date/Time Analyzed	Analyst
Aroclor-1016 [1]	ND	2.2	mg/Kg dry	100		SW-846 8082A	2/20/14	2/25/14 23:18	MJC
Aroclor-1221 [1]	ND	2.2	mg/Kg dry	100		SW-846 8082A	2/20/14	2/25/14 23:18	MJC
Aroclor-1232 [1]	ND	2.2	mg/Kg dry	100		SW-846 8082A	2/20/14	2/25/14 23:18	MJC
Aroclor-1242 [1]	ND	2.2	mg/Kg dry	100		SW-846 8082A	2/20/14	2/25/14 23:18	MJC
Aroclor-1248 [1]	ND	2.2	mg/Kg dry	100		SW-846 8082A	2/20/14	2/25/14 23:18	MJC
Aroclor-1254 [2]	13	2.2	mg/Kg dry	100	O-03	SW-846 8082A	2/20/14	2/25/14 23:18	MJC
Aroclor-1260 [1]	ND	2.2	mg/Kg dry	100		SW-846 8082A	2/20/14	2/25/14 23:18	MJC
Aroclor-1262 [1]	ND	2.2	mg/Kg dry	100		SW-846 8082A	2/20/14	2/25/14 23:18	MJC
Aroclor-1268 [1]	ND	2.2	mg/Kg dry	100		SW-846 8082A	2/20/14	2/25/14 23:18	MJC

Surrogates	% Recovery	Recovery Limits	Flag/Qual	
Decachlorobiphenyl [1]	*	30-150	S-01	2/25/14 23:18
Decachlorobiphenyl [2]	*	30-150	S-01	2/25/14 23:18
Tetrachloro-m-xylene [1]	*	30-150	S-01	2/25/14 23:18
Tetrachloro-m-xylene [2]	*	30-150	S-01	2/25/14 23:18

39 Spruce Street * East Longmeadow, MA 01028 * FAX 413/525-6405 * TEL. 413/525-2332

Project Location: NBHS Mechanical Room., New B Sample Description: Work Order: 14B0540

Date Received: 2/20/2014

Field Sample #: BF-4 6-8 Sampled: 2/19/2014 11:35

Sample ID: 14B0540-17

Sample Matrix: Soil

Conventional Chemistry Parameters by EPA/APHA/SW-846 Methods (Total)

Analyte	Results	RL	Units	Dilution	Flag/Qual	Method	Date Prepared	Date/Time Analyzed	Analyst
% Solids	87.8		% Wt	1		SM 2540G	2/26/14	2/27/14 7:47	MXG

con-test® ANALYTICAL LABORATORY

39 Spruce Street * East Longmeadow, MA 01028 * FAX 413/525-6405 * TEL. 413/525-2332

Project Location: NBHS Mechanical Room., New B Sample Description: Work Order: 14B0540

Date Received: 2/20/2014

Field Sample #: BF-4 8-10 Sampled: 2/19/2014 11:45

Sample ID: 14B0540-18

Sample Matrix: Soil

Polychlorinated Biphenyls with 3540 Soxhlet Extraction

Analyte	Results	RL	Units	Dilution	Flag/Qual	Method	Date Prepared	Date/Time Analyzed	Analyst
Aroclor-1016 [1]	ND	2.3	mg/Kg dry	100		SW-846 8082A	2/20/14	2/25/14 23:31	MJC
Aroclor-1221 [1]	ND	2.3	mg/Kg dry	100		SW-846 8082A	2/20/14	2/25/14 23:31	MJC
Aroclor-1232 [1]	ND	2.3	mg/Kg dry	100		SW-846 8082A	2/20/14	2/25/14 23:31	MJC
Aroclor-1242 [1]	ND	2.3	mg/Kg dry	100		SW-846 8082A	2/20/14	2/25/14 23:31	MJC
Aroclor-1248 [1]	ND	2.3	mg/Kg dry	100		SW-846 8082A	2/20/14	2/25/14 23:31	MJC
Aroclor-1254 [2]	16	2.3	mg/Kg dry	100	O-03	SW-846 8082A	2/20/14	2/25/14 23:31	MJC
Aroclor-1260 [1]	ND	2.3	mg/Kg dry	100		SW-846 8082A	2/20/14	2/25/14 23:31	MJC
Aroclor-1262 [1]	ND	2.3	mg/Kg dry	100		SW-846 8082A	2/20/14	2/25/14 23:31	MJC
Aroclor-1268 [1]	ND	2.3	mg/Kg dry	100		SW-846 8082A	2/20/14	2/25/14 23:31	MJC

Surrogates	% Recovery	Recovery Limits	Flag/Qual	
Decachlorobiphenyl [1]	*	30-150	S-01	2/25/14 23:31
Decachlorobiphenyl [2]	*	30-150	S-01	2/25/14 23:31
Tetrachloro-m-xylene [1]	*	30-150	S-01	2/25/14 23:31
Tetrachloro-m-xylene [2]	*	30-150	S-01	2/25/14 23:31

39 Spruce Street * East Longmeadow, MA 01028 * FAX 413/525-6405 * TEL. 413/525-2332

Project Location: NBHS Mechanical Room., New B Sample Description: Work Order: 14B0540

Date Received: 2/20/2014

Field Sample #: BF-4 8-10 Sampled: 2/19/2014 11:45

Sample ID: 14B0540-18

Sample Matrix: Soil

Conventional Chemistry Parameters by EPA/APHA/SW-846 Methods (Total)

Analyte	Results	RL	Units	Dilution	Flag/Qual	Method	Date Prepared	Date/Time Analyzed	Analyst
% Solids	84.5		% Wt	1		SM 2540G	2/26/14	2/27/14 7:47	MXG

39 Spruce Street * East Longmeadow, MA 01028 * FAX 413/525-6405 * TEL. 413/525-2332

Project Location: NBHS Mechanical Room., New B Sample Description: Work Order: 14B0540

Date Received: 2/20/2014

Field Sample #: BF-4 10-12 Sampled: 2/19/2014 11:50

Sample ID: 14B0540-19

Sample Matrix: Soil

Polychlorinated Biphenyls with 3540 Soxhlet Extraction

Analyte	Results	RL	Units	Dilution	Flag/Qual	Method	Date Prepared	Date/Time Analyzed	Analyst
Aroclor-1016 [1]	ND	0.11	mg/Kg dry	5		SW-846 8082A	2/20/14	2/25/14 23:43	MJC
Aroclor-1221 [1]	ND	0.11	mg/Kg dry	5		SW-846 8082A	2/20/14	2/25/14 23:43	MJC
Aroclor-1232 [1]	ND	0.11	mg/Kg dry	5		SW-846 8082A	2/20/14	2/25/14 23:43	MJC
Aroclor-1242 [1]	ND	0.11	mg/Kg dry	5		SW-846 8082A	2/20/14	2/25/14 23:43	MJC
Aroclor-1248 [1]	ND	0.11	mg/Kg dry	5		SW-846 8082A	2/20/14	2/25/14 23:43	MJC
Aroclor-1254 [2]	0.30	0.11	mg/Kg dry	5	O-03	SW-846 8082A	2/20/14	2/25/14 23:43	MJC
Aroclor-1260 [1]	ND	0.11	mg/Kg dry	5		SW-846 8082A	2/20/14	2/25/14 23:43	MJC
Aroclor-1262 [1]	ND	0.11	mg/Kg dry	5		SW-846 8082A	2/20/14	2/25/14 23:43	MJC
Aroclor-1268 [1]	ND	0.11	mg/Kg dry	5		SW-846 8082A	2/20/14	2/25/14 23:43	MJC

Surrogates	% Recovery	Recovery Limits	Flag/Qual	
Decachlorobiphenyl [1]	98.6	30-150		2/25/14 23:43
Decachlorobiphenyl [2]	113	30-150		2/25/14 23:43
Tetrachloro-m-xylene [1]	87.7	30-150		2/25/14 23:43
Tetrachloro-m-xylene [2]	93.4	30-150		2/25/14 23:43

39 Spruce Street * East Longmeadow, MA 01028 * FAX 413/525-6405 * TEL. 413/525-2332

Project Location: NBHS Mechanical Room., New B Sample Description: Work Order: 14B0540

Date Received: 2/20/2014

Field Sample #: BF-4 10-12 Sampled: 2/19/2014 11:50

Sample ID: 14B0540-19

Sample Matrix: Soil

Conventional Chemistry Parameters by EPA/APHA/SW-846 Methods (Total)

Analyte	Results	RL	Units	Dilution	Flag/Qual	Method	Date Prepared	Date/Time Analyzed	Analyst
% Solids	87.9		% Wt	1		SM 2540G	2/26/14	2/27/14 7:47	MXG

con-test® ANALYTICAL LABORATORY

39 Spruce Street * East Longmeadow, MA 01028 * FAX 413/525-6405 * TEL. 413/525-2332

Project Location: NBHS Mechanical Room., New B Sample Description: Work Order: 14B0540

Date Received: 2/20/2014

Field Sample #: BF-5 2-4 Sampled: 2/19/2014 12:15

Sample ID: 14B0540-20

Sample Matrix: Soil

Polychlorinated Biphenyls with 3540 Soxhlet Extraction

Analyte	Results	RL	Units	Dilution	Flag/Qual	Method	Date Prepared	Date/Time Analyzed	Analyst
Aroclor-1016 [1]	ND	0.42	mg/Kg dry	20		SW-846 8082A	2/20/14	2/25/14 23:56	MJC
Aroclor-1221 [1]	ND	0.42	mg/Kg dry	20		SW-846 8082A	2/20/14	2/25/14 23:56	MJC
Aroclor-1232 [1]	ND	0.42	mg/Kg dry	20		SW-846 8082A	2/20/14	2/25/14 23:56	MJC
Aroclor-1242 [1]	ND	0.42	mg/Kg dry	20		SW-846 8082A	2/20/14	2/25/14 23:56	MJC
Aroclor-1248 [1]	ND	0.42	mg/Kg dry	20		SW-846 8082A	2/20/14	2/25/14 23:56	MJC
Aroclor-1254 [2]	1.8	0.42	mg/Kg dry	20		SW-846 8082A	2/20/14	2/25/14 23:56	MJC
Aroclor-1260 [1]	ND	0.42	mg/Kg dry	20		SW-846 8082A	2/20/14	2/25/14 23:56	MJC
Aroclor-1262 [1]	ND	0.42	mg/Kg dry	20		SW-846 8082A	2/20/14	2/25/14 23:56	MJC
Aroclor-1268 [1]	ND	0.42	mg/Kg dry	20		SW-846 8082A	2/20/14	2/25/14 23:56	MJC

Surrogates	% Recovery	Recovery Limits	Flag/Qual	
Decachlorobiphenyl [1]	111	30-150		2/25/14 23:56
Decachlorobiphenyl [2]	129	30-150		2/25/14 23:56
Tetrachloro-m-xylene [1]	96.5	30-150		2/25/14 23:56
Tetrachloro-m-xylene [2]	102	30-150		2/25/14 23:56

39 Spruce Street * East Longmeadow, MA 01028 * FAX 413/525-6405 * TEL. 413/525-2332

Project Location: NBHS Mechanical Room., New B Sample Description: Work Order: 14B0540

Date Received: 2/20/2014

Field Sample #: BF-5 2-4 Sampled: 2/19/2014 12:15

Sample ID: 14B0540-20

Sample Matrix: Soil

Conventional Chemistry Parameters by EPA/APHA/SW-846 Methods (Total)

Analyte	Results	RL	Units	Dilution	Flag/Qual	Method	Date Prepared	Date/Time Analyzed	Analyst
% Solids	89.1		% Wt	1		SM 2540G	2/26/14	2/27/14 7:47	MXG

39 Spruce Street * East Longmeadow, MA 01028 * FAX 413/525-6405 * TEL. 413/525-2332

Project Location: NBHS Mechanical Room., New B Sample Description: Work Order: 14B0540

Date Received: 2/20/2014

Field Sample #: BF-5 4-6 Sampled: 2/19/2014 12:20

Sample ID: 14B0540-21

Sample Matrix: Soil

Polychlorinated Biphenyls with 3540 Soxhlet Extraction

Analyte	Results	RL	Units	Dilution	Flag/Qual	Method	Date Prepared	Date/Time Analyzed	Analyst
Aroclor-1016 [1]	ND	0.11	mg/Kg dry	5	R-06	SW-846 8082A	2/20/14	2/25/14 14:57	MJC
Aroclor-1221 [1]	ND	0.11	mg/Kg dry	5		SW-846 8082A	2/20/14	2/25/14 14:57	MJC
Aroclor-1232 [1]	ND	0.11	mg/Kg dry	5		SW-846 8082A	2/20/14	2/25/14 14:57	MJC
Aroclor-1242 [1]	ND	0.11	mg/Kg dry	5		SW-846 8082A	2/20/14	2/25/14 14:57	MJC
Aroclor-1248 [1]	ND	0.11	mg/Kg dry	5		SW-846 8082A	2/20/14	2/25/14 14:57	MJC
Aroclor-1254 [2]	0.74	0.11	mg/Kg dry	5		SW-846 8082A	2/20/14	2/25/14 14:57	MJC
Aroclor-1260 [1]	ND	0.11	mg/Kg dry	5		SW-846 8082A	2/20/14	2/25/14 14:57	MJC
Aroclor-1262 [1]	ND	0.11	mg/Kg dry	5		SW-846 8082A	2/20/14	2/25/14 14:57	MJC
Aroclor-1268 [1]	ND	0.11	mg/Kg dry	5		SW-846 8082A	2/20/14	2/25/14 14:57	MJC

Surrogates	% Recovery	Recovery Limits	Flag/Qual	
Decachlorobiphenyl [1]	93.6	30-150		2/25/14 14:57
Decachlorobiphenyl [2]	104	30-150		2/25/14 14:57
Tetrachloro-m-xylene [1]	80.1	30-150		2/25/14 14:57
Tetrachloro-m-xylene [2]	83.8	30-150		2/25/14 14:57

39 Spruce Street * East Longmeadow, MA 01028 * FAX 413/525-6405 * TEL. 413/525-2332

Project Location: NBHS Mechanical Room., New B Sample Description: Work Order: 14B0540

Date Received: 2/20/2014

Field Sample #: BF-5 4-6 Sampled: 2/19/2014 12:20

Sample ID: 14B0540-21

Sample Matrix: Soil

Conventional Chemistry Parameters by EPA/APHA/SW-846 Methods (Total)

Analyte	Results	RL	Units	Dilution	Flag/Qual	Method	Date Prepared	Date/Time Analyzed	Analyst
% Solids	89.8		% Wt	1		SM 2540G	2/26/14	2/27/14 7:47	MXG

con-test® ANALYTICAL LABORATORY
39 Spruce Street * East Longmeadow, MA 01028 * FAX 413/525-6405 * TEL. 413/525-2332

Project Location: NBHS Mechanical Room., New B Sample Description: Work Order: 14B0540

Date Received: 2/20/2014

Field Sample #: BF-5 6-8 Sampled: 2/19/2014 12:30

Sample ID: 14B0540-22

Sample Matrix: Soil

Sample Flags: O-32

Polychlorinated Biphenyls with 3540 Soxhlet Extraction

Analyte	Results	RL	Units	Dilution	Flag/Qual	Method	Date Prepared	Date/Time Analyzed	Analyst
Aroclor-1016 [1]	ND	0.11	mg/Kg dry	5		SW-846 8082A	2/20/14	2/25/14 15:10	MJC
Aroclor-1221 [1]	ND	0.11	mg/Kg dry	5		SW-846 8082A	2/20/14	2/25/14 15:10	MJC
Aroclor-1232 [1]	ND	0.11	mg/Kg dry	5		SW-846 8082A	2/20/14	2/25/14 15:10	MJC
Aroclor-1242 [1]	ND	0.11	mg/Kg dry	5		SW-846 8082A	2/20/14	2/25/14 15:10	MJC
Aroclor-1248 [1]	ND	0.11	mg/Kg dry	5		SW-846 8082A	2/20/14	2/25/14 15:10	MJC
Aroclor-1254 [1]	ND	0.11	mg/Kg dry	5		SW-846 8082A	2/20/14	2/25/14 15:10	MJC
Aroclor-1260 [1]	ND	0.11	mg/Kg dry	5		SW-846 8082A	2/20/14	2/25/14 15:10	MJC
Aroclor-1262 [1]	ND	0.11	mg/Kg dry	5		SW-846 8082A	2/20/14	2/25/14 15:10	MJC
Aroclor-1268 [1]	ND	0.11	mg/Kg dry	5		SW-846 8082A	2/20/14	2/25/14 15:10	MJC

Surrogates	% Recovery	Recovery Limits	Flag/Qual	
Decachlorobiphenyl [1]	91.6	30-150		2/25/14 15:10
Decachlorobiphenyl [2]	106	30-150		2/25/14 15:10
Tetrachloro-m-xylene [1]	94.2	30-150		2/25/14 15:10
Tetrachloro-m-xylene [2]	99.6	30-150		2/25/14 15:10

39 Spruce Street * East Longmeadow, MA 01028 * FAX 413/525-6405 * TEL. 413/525-2332

Project Location: NBHS Mechanical Room., New B Sample Description: Work Order: 14B0540

Date Received: 2/20/2014

Field Sample #: BF-5 6-8 Sampled: 2/19/2014 12:30

Sample ID: 14B0540-22

Sample Matrix: Soil

Conventional Chemistry Parameters by EPA/APHA/SW-846 Methods (Total)

Analyte	Results	RL	Units	Dilution	Flag/Qual	Method	Date Prepared	Date/Time Analyzed	Analyst
% Solids	89.5		% Wt	1		SM 2540G	2/26/14	2/27/14 7:47	MXG

con-test® ANALYTICAL LABORATORY

39 Spruce Street * East Longmeadow, MA 01028 * FAX 413/525-6405 * TEL. 413/525-2332

Project Location: NBHS Mechanical Room., New B Sample Description: Work Order: 14B0540

Date Received: 2/20/2014

Field Sample #: BF-5 8-10 Sampled: 2/19/2014 12:45

Sample ID: 14B0540-23

Sample Matrix: Soil

Sample Flags: O-32

Polychlorinated Biphenyls with 3540 Soxhlet Extraction

Analyte	Results	RL	Units	Dilution	Flag/Qual	Method	Date Prepared	Date/Time Analyzed	Analyst
Aroclor-1016 [1]	ND	0.11	mg/Kg dry	5		SW-846 8082A	2/20/14	2/25/14 15:23	MJC
Aroclor-1221 [1]	ND	0.11	mg/Kg dry	5		SW-846 8082A	2/20/14	2/25/14 15:23	MJC
Aroclor-1232 [1]	ND	0.11	mg/Kg dry	5		SW-846 8082A	2/20/14	2/25/14 15:23	MJC
Aroclor-1242 [1]	ND	0.11	mg/Kg dry	5		SW-846 8082A	2/20/14	2/25/14 15:23	MJC
Aroclor-1248 [1]	ND	0.11	mg/Kg dry	5		SW-846 8082A	2/20/14	2/25/14 15:23	MJC
Aroclor-1254 [1]	ND	0.11	mg/Kg dry	5		SW-846 8082A	2/20/14	2/25/14 15:23	MJC
Aroclor-1260 [1]	ND	0.11	mg/Kg dry	5		SW-846 8082A	2/20/14	2/25/14 15:23	MJC
Aroclor-1262 [1]	ND	0.11	mg/Kg dry	5		SW-846 8082A	2/20/14	2/25/14 15:23	MJC
Aroclor-1268 [1]	ND	0.11	mg/Kg dry	5		SW-846 8082A	2/20/14	2/25/14 15:23	MJC

Surrogates	% Recovery	Recovery Limits	Flag/Qual	
Decachlorobiphenyl [1]	92.6	30-150		2/25/14 15:23
Decachlorobiphenyl [2]	106	30-150		2/25/14 15:23
Tetrachloro-m-xylene [1]	85.9	30-150		2/25/14 15:23
Tetrachloro-m-xylene [2]	90.1	30-150		2/25/14 15:23

39 Spruce Street * East Longmeadow, MA 01028 * FAX 413/525-6405 * TEL. 413/525-2332

Project Location: NBHS Mechanical Room., New B Sample Description: Work Order: 14B0540

Date Received: 2/20/2014

Field Sample #: BF-5 8-10 Sampled: 2/19/2014 12:45

Sample ID: 14B0540-23

Sample Matrix: Soil

Conventional Chemistry Parameters by EPA/APHA/SW-846 Methods (Total)

Analyte	Results	RL	Units	Dilution	Flag/Qual	Method	Date Prepared	Date/Time Analyzed	Analyst
% Solids	86.1		% Wt	1		SM 2540G	2/26/14	2/27/14 7:47	MXG

con-test® ANALYTICAL LABORATORY

39 Spruce Street * East Longmeadow, MA 01028 * FAX 413/525-6405 * TEL. 413/525-2332

Project Location: NBHS Mechanical Room., New B Sample Description: Work Order: 14B0540

Date Received: 2/20/2014

Field Sample #: BF-5 10-12 Sampled: 2/19/2014 12:50

Sample ID: 14B0540-24

Sample Matrix: Soil

Sample Flags: O-32

Polychlorinated Biphenyls with 3540 Soxhlet Extraction

Analyte	Results	RL	Units	Dilution	Flag/Qual	Method	Date Prepared	Date/Time Analyzed	Analyst
Aroclor-1016 [1]	ND	0.11	mg/Kg dry	5		SW-846 8082A	2/20/14	2/25/14 15:36	MJC
Aroclor-1221 [1]	ND	0.11	mg/Kg dry	5		SW-846 8082A	2/20/14	2/25/14 15:36	MJC
Aroclor-1232 [1]	ND	0.11	mg/Kg dry	5		SW-846 8082A	2/20/14	2/25/14 15:36	MJC
Aroclor-1242 [1]	ND	0.11	mg/Kg dry	5		SW-846 8082A	2/20/14	2/25/14 15:36	MJC
Aroclor-1248 [1]	ND	0.11	mg/Kg dry	5		SW-846 8082A	2/20/14	2/25/14 15:36	MJC
Aroclor-1254 [1]	ND	0.11	mg/Kg dry	5		SW-846 8082A	2/20/14	2/25/14 15:36	MJC
Aroclor-1260 [1]	ND	0.11	mg/Kg dry	5		SW-846 8082A	2/20/14	2/25/14 15:36	MJC
Aroclor-1262 [1]	ND	0.11	mg/Kg dry	5		SW-846 8082A	2/20/14	2/25/14 15:36	MJC
Aroclor-1268 [1]	ND	0.11	mg/Kg dry	5		SW-846 8082A	2/20/14	2/25/14 15:36	MJC

Surrogates	% Recovery	Recovery Limits	Flag/Qual	
Decachlorobiphenyl [1]	97.0	30-150		2/25/14 15:36
Decachlorobiphenyl [2]	108	30-150		2/25/14 15:36
Tetrachloro-m-xylene [1]	87.9	30-150		2/25/14 15:36
Tetrachloro-m-xylene [2]	92.2	30-150		2/25/14 15:36

39 Spruce Street * East Longmeadow, MA 01028 * FAX 413/525-6405 * TEL. 413/525-2332

Project Location: NBHS Mechanical Room., New B Sample Description: Work Order: 14B0540

Date Received: 2/20/2014

Field Sample #: BF-5 10-12 Sampled: 2/19/2014 12:50

Sample ID: 14B0540-24

Sample Matrix: Soil

Conventional Chemistry Parameters by EPA/APHA/SW-846 Methods (Total)

Analyte	Results	RL	Units	Dilution	Flag/Qual	Method	Date Prepared	Date/Time Analyzed	Analyst
% Solids	87.8		% Wt	1		SM 2540G	2/26/14	2/27/14 7:47	MXG

con-test® ANALYTICAL LABORATORY
39 Spruce Street * East Longmeadow, MA 01028 * FAX 413/525-6405 * TEL. 413/525-2332

Project Location: NBHS Mechanical Room., New B Sample Description: Work Order: 14B0540

Date Received: 2/20/2014

Field Sample #: BF-6 2-4 Sampled: 2/19/2014 13:10

Sample ID: 14B0540-25

Sample Matrix: Soil

Polychlorinated Biphenyls with 3540 Soxhlet Extraction

Analyte	Results	RL	Units	Dilution	Flag/Qual	Method	Date Prepared	Date/Time Analyzed	Analyst
Aroclor-1016 [1]	ND	0.11	mg/Kg dry	5		SW-846 8082A	2/20/14	2/25/14 15:49	MJC
Aroclor-1221 [1]	ND	0.11	mg/Kg dry	5		SW-846 8082A	2/20/14	2/25/14 15:49	MJC
Aroclor-1232 [1]	ND	0.11	mg/Kg dry	5		SW-846 8082A	2/20/14	2/25/14 15:49	MJC
Aroclor-1242 [1]	ND	0.11	mg/Kg dry	5		SW-846 8082A	2/20/14	2/25/14 15:49	MJC
Aroclor-1248 [1]	ND	0.11	mg/Kg dry	5		SW-846 8082A	2/20/14	2/25/14 15:49	MJC
Aroclor-1254 [2]	0.32	0.11	mg/Kg dry	5		SW-846 8082A	2/20/14	2/25/14 15:49	MJC
Aroclor-1260 [1]	ND	0.11	mg/Kg dry	5		SW-846 8082A	2/20/14	2/25/14 15:49	MJC
Aroclor-1262 [1]	ND	0.11	mg/Kg dry	5		SW-846 8082A	2/20/14	2/25/14 15:49	MJC
Aroclor-1268 [1]	ND	0.11	mg/Kg dry	5		SW-846 8082A	2/20/14	2/25/14 15:49	MJC

Surrogates	% Recovery	Recovery Limits	Flag/Qual	
Decachlorobiphenyl [1]	93.3	30-150		2/25/14 15:49
Decachlorobiphenyl [2]	105	30-150		2/25/14 15:49
Tetrachloro-m-xylene [1]	86.8	30-150		2/25/14 15:49
Tetrachloro-m-xylene [2]	91.7	30-150		2/25/14 15:49

39 Spruce Street * East Longmeadow, MA 01028 * FAX 413/525-6405 * TEL. 413/525-2332

Project Location: NBHS Mechanical Room., New B Sample Description: Work Order: 14B0540

Date Received: 2/20/2014

Field Sample #: BF-6 2-4 Sampled: 2/19/2014 13:10

Sample ID: 14B0540-25

Sample Matrix: Soil

Conventional Chemistry Parameters by EPA/APHA/SW-846 Methods (Total)

Analyte	Results	RL	Units	Dilution	Flag/Qual	Method	Date Prepared	Date/Time Analyzed	Analyst
% Solids	87.3		% Wt	1		SM 2540G	2/26/14	2/27/14 7:47	MXG

con-test® ANALYTICAL LABORATORY

39 Spruce Street * East Longmeadow, MA 01028 * FAX 413/525-6405 * TEL. 413/525-2332

Project Location: NBHS Mechanical Room., New B Sample Description: Work Order: 14B0540

Date Received: 2/20/2014

Field Sample #: BF-6 4-6 Sampled: 2/19/2014 13:20

Sample ID: 14B0540-26

Sample Matrix: Soil

Polychlorinated Biphenyls with 3540 Soxhlet Extraction

Analyte	Results	RL	Units	Dilution	Flag/Qual	Method	Date Prepared	Date/Time Analyzed	Analyst
Aroclor-1016 [1]	ND	0.12	mg/Kg dry	5		SW-846 8082A	2/20/14	2/25/14 16:02	MJC
Aroclor-1221 [1]	ND	0.12	mg/Kg dry	5		SW-846 8082A	2/20/14	2/25/14 16:02	MJC
Aroclor-1232 [1]	ND	0.12	mg/Kg dry	5		SW-846 8082A	2/20/14	2/25/14 16:02	MJC
Aroclor-1242 [1]	ND	0.12	mg/Kg dry	5		SW-846 8082A	2/20/14	2/25/14 16:02	MJC
Aroclor-1248 [1]	0.21	0.12	mg/Kg dry	5		SW-846 8082A	2/20/14	2/25/14 16:02	MJC
Aroclor-1254 [2]	0.45	0.12	mg/Kg dry	5		SW-846 8082A	2/20/14	2/25/14 16:02	MJC
Aroclor-1260 [1]	ND	0.12	mg/Kg dry	5		SW-846 8082A	2/20/14	2/25/14 16:02	MJC
Aroclor-1262 [1]	ND	0.12	mg/Kg dry	5		SW-846 8082A	2/20/14	2/25/14 16:02	MJC
Aroclor-1268 [1]	ND	0.12	mg/Kg dry	5		SW-846 8082A	2/20/14	2/25/14 16:02	MJC

Surrogates	% Recovery	Recovery Limits	Flag/Qual	
Decachlorobiphenyl [1]	93.2	30-150		2/25/14 16:02
Decachlorobiphenyl [2]	107	30-150		2/25/14 16:02
Tetrachloro-m-xylene [1]	101	30-150		2/25/14 16:02
Tetrachloro-m-xylene [2]	107	30-150		2/25/14 16:02

39 Spruce Street * East Longmeadow, MA 01028 * FAX 413/525-6405 * TEL. 413/525-2332

Project Location: NBHS Mechanical Room., New B Sample Description: Work Order: 14B0540

Date Received: 2/20/2014

Field Sample #: BF-6 4-6 Sampled: 2/19/2014 13:20

Sample ID: 14B0540-26

Sample Matrix: Soil

Conventional Chemistry Parameters by EPA/APHA/SW-846 Methods (Total)

Analyte	Results	RL	Units	Dilution	Flag/Qual	Method	Date Prepared	Date/Time Analyzed	Analyst
% Solids	84.8		% Wt	1		SM 2540G	2/26/14	2/27/14 7:47	MXG

39 Spruce Street * East Longmeadow, MA 01028 * FAX 413/525-6405 * TEL. 413/525-2332

Project Location: NBHS Mechanical Room., New B Sample Description: Work Order: 14B0540

Date Received: 2/20/2014

Field Sample #: BF-6 6-8 Sampled: 2/19/2014 13:30

Sample ID: 14B0540-27

Sample Matrix: Soil

Sample Flags: O-32

Polychlorinated Biphenyls with 3540 Soxhlet Extraction

Analyte	Results	RL	Units	Dilution	Flag/Qual	Method	Date Prepared	Date/Time Analyzed	Analyst
Aroclor-1016 [1]	ND	0.11	mg/Kg dry	5		SW-846 8082A	2/20/14	2/25/14 16:14	MJC
Aroclor-1221 [1]	ND	0.11	mg/Kg dry	5		SW-846 8082A	2/20/14	2/25/14 16:14	MJC
Aroclor-1232 [1]	ND	0.11	mg/Kg dry	5		SW-846 8082A	2/20/14	2/25/14 16:14	MJC
Aroclor-1242 [1]	ND	0.11	mg/Kg dry	5		SW-846 8082A	2/20/14	2/25/14 16:14	MJC
Aroclor-1248 [1]	ND	0.11	mg/Kg dry	5		SW-846 8082A	2/20/14	2/25/14 16:14	MJC
Aroclor-1254 [1]	ND	0.11	mg/Kg dry	5		SW-846 8082A	2/20/14	2/25/14 16:14	MJC
Aroclor-1260 [1]	ND	0.11	mg/Kg dry	5		SW-846 8082A	2/20/14	2/25/14 16:14	MJC
Aroclor-1262 [1]	ND	0.11	mg/Kg dry	5		SW-846 8082A	2/20/14	2/25/14 16:14	MJC
Aroclor-1268 [1]	ND	0.11	mg/Kg dry	5		SW-846 8082A	2/20/14	2/25/14 16:14	MJC

Surrogates	% Recovery	Recovery Limits	Flag/Qual	
Decachlorobiphenyl [1]	90.0	30-150		2/25/14 16:14
Decachlorobiphenyl [2]	106	30-150		2/25/14 16:14
Tetrachloro-m-xylene [1]	96.2	30-150		2/25/14 16:14
Tetrachloro-m-xylene [2]	103	30-150		2/25/14 16:14

39 Spruce Street * East Longmeadow, MA 01028 * FAX 413/525-6405 * TEL. 413/525-2332

Project Location: NBHS Mechanical Room., New B Sample Description: Work Order: 14B0540

Date Received: 2/20/2014

Field Sample #: BF-6 6-8 Sampled: 2/19/2014 13:30

Sample ID: 14B0540-27

Sample Matrix: Soil

Conventional Chemistry Parameters by EPA/APHA/SW-846 Methods (Total)

Analyte	Results	RL	Units	Dilution	Flag/Qual	Method	Date Prepared	Date/Time Analyzed	Analyst
% Solids	87.5		% Wt	1		SM 2540G	2/26/14	2/27/14 7:47	MXG

con-test® ANALYTICAL LABORATORY

39 Spruce Street * East Longmeadow, MA 01028 * FAX 413/525-6405 * TEL. 413/525-2332

Project Location: NBHS Mechanical Room., New B Sample Description: Work Order: 14B0540

Date Received: 2/20/2014

Field Sample #: BF-6 8-10 Sampled: 2/19/2014 13:40

Sample ID: 14B0540-28

Sample Matrix: Soil

Sample Flags: O-32

Polychlorinated Biphenyls with 3540 Soxhlet Extraction

Analyte	Results	RL	Units	Dilution	Flag/Qual	Method	Date Prepared	Date/Time Analyzed	Analyst
Aroclor-1016 [1]	ND	0.12	mg/Kg dry	5		SW-846 8082A	2/20/14	2/25/14 16:27	MJC
Aroclor-1221 [1]	ND	0.12	mg/Kg dry	5		SW-846 8082A	2/20/14	2/25/14 16:27	MJC
Aroclor-1232 [1]	ND	0.12	mg/Kg dry	5		SW-846 8082A	2/20/14	2/25/14 16:27	MJC
Aroclor-1242 [1]	ND	0.12	mg/Kg dry	5		SW-846 8082A	2/20/14	2/25/14 16:27	MJC
Aroclor-1248 [1]	ND	0.12	mg/Kg dry	5		SW-846 8082A	2/20/14	2/25/14 16:27	MJC
Aroclor-1254 [1]	ND	0.12	mg/Kg dry	5		SW-846 8082A	2/20/14	2/25/14 16:27	MJC
Aroclor-1260 [1]	ND	0.12	mg/Kg dry	5		SW-846 8082A	2/20/14	2/25/14 16:27	MJC
Aroclor-1262 [1]	ND	0.12	mg/Kg dry	5		SW-846 8082A	2/20/14	2/25/14 16:27	MJC
Aroclor-1268 [1]	ND	0.12	mg/Kg dry	5		SW-846 8082A	2/20/14	2/25/14 16:27	MJC

Surrogates	% Recovery	Recovery Limits	Flag/Qual	
Decachlorobiphenyl [1]	93.1	30-150		2/25/14 16:27
Decachlorobiphenyl [2]	109	30-150		2/25/14 16:27
Tetrachloro-m-xylene [1]	92.0	30-150		2/25/14 16:27
Tetrachloro-m-xylene [2]	97.0	30-150		2/25/14 16:27

39 Spruce Street * East Longmeadow, MA 01028 * FAX 413/525-6405 * TEL. 413/525-2332

Project Location: NBHS Mechanical Room., New B Sample Description: Work Order: 14B0540

Date Received: 2/20/2014

Field Sample #: BF-6 8-10 Sampled: 2/19/2014 13:40

Sample ID: 14B0540-28

Sample Matrix: Soil

Conventional Chemistry Parameters by EPA/APHA/SW-846 Methods (Total)

Analyte	Results	RL	Units	Dilution	Flag/Qual	Method	Date Prepared	Date/Time Analyzed	Analyst
% Solids	84.9		% Wt	1		SM 2540G	2/26/14	2/27/14 7:47	MXG

con-test® ANALYTICAL LABORATORY

39 Spruce Street * East Longmeadow, MA 01028 * FAX 413/525-6405 * TEL. 413/525-2332

Project Location: NBHS Mechanical Room., New B Sample Description: Work Order: 14B0540

Date Received: 2/20/2014

Field Sample #: BF-6 10-12 Sampled: 2/19/2014 13:45

Sample ID: 14B0540-29

Sample Matrix: Soil

Sample Flags: O-32

Polychlorinated Biphenyls with 3540 Soxhlet Extraction

Analyte	Results	RL	Units	Dilution	Flag/Qual	Method	Date Prepared	Date/Time Analyzed	Analyst
Aroclor-1016 [1]	ND	0.12	mg/Kg dry	5		SW-846 8082A	2/20/14	2/25/14 16:40	MJC
Aroclor-1221 [1]	ND	0.12	mg/Kg dry	5		SW-846 8082A	2/20/14	2/25/14 16:40	MJC
Aroclor-1232 [1]	ND	0.12	mg/Kg dry	5		SW-846 8082A	2/20/14	2/25/14 16:40	MJC
Aroclor-1242 [1]	ND	0.12	mg/Kg dry	5		SW-846 8082A	2/20/14	2/25/14 16:40	MJC
Aroclor-1248 [1]	ND	0.12	mg/Kg dry	5		SW-846 8082A	2/20/14	2/25/14 16:40	MJC
Aroclor-1254 [1]	ND	0.12	mg/Kg dry	5		SW-846 8082A	2/20/14	2/25/14 16:40	MJC
Aroclor-1260 [1]	ND	0.12	mg/Kg dry	5		SW-846 8082A	2/20/14	2/25/14 16:40	MJC
Aroclor-1262 [1]	ND	0.12	mg/Kg dry	5		SW-846 8082A	2/20/14	2/25/14 16:40	MJC
Aroclor-1268 [1]	ND	0.12	mg/Kg dry	5		SW-846 8082A	2/20/14	2/25/14 16:40	MJC

Surrogates	% Recovery	Recovery Limits	Flag/Qual	
Decachlorobiphenyl [1]	95.2	30-150		2/25/14 16:40
Decachlorobiphenyl [2]	111	30-150		2/25/14 16:40
Tetrachloro-m-xylene [1]	95.5	30-150		2/25/14 16:40
Tetrachloro-m-xylene [2]	101	30-150		2/25/14 16:40

39 Spruce Street * East Longmeadow, MA 01028 * FAX 413/525-6405 * TEL. 413/525-2332

Project Location: NBHS Mechanical Room., New B Sample Description: Work Order: 14B0540

Date Received: 2/20/2014

Field Sample #: BF-6 10-12 Sampled: 2/19/2014 13:45

Sample ID: 14B0540-29

Sample Matrix: Soil

Conventional Chemistry Parameters by EPA/APHA/SW-846 Methods (Total)

Analyte	Results	RL	Units	Dilution	Flag/Qual	Method	Date Prepared	Date/Time Analyzed	Analyst
% Solids	83.5		% Wt	1		SM 2540G	2/26/14	2/27/14 7:47	MXG

con-test® ANALYTICAL LABORATORY

39 Spruce Street * East Longmeadow, MA 01028 * FAX 413/525-6405 * TEL. 413/525-2332

Project Location: NBHS Mechanical Room., New B Sample Description: Work Order: 14B0540

Date Received: 2/20/2014

Field Sample #: BF-7 2-4 Sampled: 2/19/2014 14:05

Sample ID: 14B0540-30

Sample Matrix: Soil

Sample Flags: O-32

Polychlorinated Biphenyls with 3540 Soxhlet Extraction

Analyte	Results	RL	Units	Dilution	Flag/Qual	Method	Date Prepared	Date/Time Analyzed	Analyst
Aroclor-1016 [1]	ND	0.11	mg/Kg dry	5		SW-846 8082A	2/20/14	2/25/14 16:53	MJC
Aroclor-1221 [1]	ND	0.11	mg/Kg dry	5		SW-846 8082A	2/20/14	2/25/14 16:53	MJC
Aroclor-1232 [1]	ND	0.11	mg/Kg dry	5		SW-846 8082A	2/20/14	2/25/14 16:53	MJC
Aroclor-1242 [1]	ND	0.11	mg/Kg dry	5		SW-846 8082A	2/20/14	2/25/14 16:53	MJC
Aroclor-1248 [1]	ND	0.11	mg/Kg dry	5		SW-846 8082A	2/20/14	2/25/14 16:53	MJC
Aroclor-1254 [1]	ND	0.11	mg/Kg dry	5		SW-846 8082A	2/20/14	2/25/14 16:53	MJC
Aroclor-1260 [1]	ND	0.11	mg/Kg dry	5		SW-846 8082A	2/20/14	2/25/14 16:53	MJC
Aroclor-1262 [1]	ND	0.11	mg/Kg dry	5		SW-846 8082A	2/20/14	2/25/14 16:53	MJC
Aroclor-1268 [1]	ND	0.11	mg/Kg dry	5		SW-846 8082A	2/20/14	2/25/14 16:53	MJC

Surrogates	% Recovery	Recovery Limits	Flag/Qual	
Decachlorobiphenyl [1]	93.6	30-150		2/25/14 16:53
Decachlorobiphenyl [2]	109	30-150		2/25/14 16:53
Tetrachloro-m-xylene [1]	97.7	30-150		2/25/14 16:53
Tetrachloro-m-xylene [2]	104	30-150		2/25/14 16:53

39 Spruce Street * East Longmeadow, MA 01028 * FAX 413/525-6405 * TEL. 413/525-2332

Project Location: NBHS Mechanical Room., New B Sample Description: Work Order: 14B0540

Date Received: 2/20/2014

Field Sample #: BF-7 2-4 Sampled: 2/19/2014 14:05

Sample ID: 14B0540-30

Sample Matrix: Soil

Conventional Chemistry Parameters by EPA/APHA/SW-846 Methods (Total)

Analyte	Results	RL	Units	Dilution	Flag/Qual	Method	Date Prepared	Date/Time Analyzed	Analyst
% Solids	91.2		% Wt	1		SM 2540G	2/26/14	2/27/14 7:47	MXG

con-test® ANALYTICAL LABORATORY
39 Spruce Street * East Longmeadow, MA 01028 * FAX 413/525-6405 * TEL. 413/525-2332

Project Location: NBHS Mechanical Room., New B Sample Description: Work Order: 14B0540

Date Received: 2/20/2014

Field Sample #: BF-7 4-6 Sampled: 2/19/2014 14:15

Sample ID: 14B0540-31

Sample Matrix: Soil

Sample Flags: O-32

Polychlorinated Biphenyls with 3540 Soxhlet Extraction

Analyte	Results	RL	Units	Dilution	Flag/Qual	Method	Date Prepared	Date/Time Analyzed	Analyst
Aroclor-1016 [1]	ND	0.11	mg/Kg dry	5		SW-846 8082A	2/20/14	2/25/14 17:31	MJC
Aroclor-1221 [1]	ND	0.11	mg/Kg dry	5		SW-846 8082A	2/20/14	2/25/14 17:31	MJC
Aroclor-1232 [1]	ND	0.11	mg/Kg dry	5		SW-846 8082A	2/20/14	2/25/14 17:31	MJC
Aroclor-1242 [1]	ND	0.11	mg/Kg dry	5		SW-846 8082A	2/20/14	2/25/14 17:31	MJC
Aroclor-1248 [1]	ND	0.11	mg/Kg dry	5		SW-846 8082A	2/20/14	2/25/14 17:31	MJC
Aroclor-1254 [1]	ND	0.11	mg/Kg dry	5		SW-846 8082A	2/20/14	2/25/14 17:31	MJC
Aroclor-1260 [1]	ND	0.11	mg/Kg dry	5		SW-846 8082A	2/20/14	2/25/14 17:31	MJC
Aroclor-1262 [1]	ND	0.11	mg/Kg dry	5		SW-846 8082A	2/20/14	2/25/14 17:31	MJC
Aroclor-1268 [1]	ND	0.11	mg/Kg dry	5		SW-846 8082A	2/20/14	2/25/14 17:31	MJC

Surrogates	% Recovery	Recovery Limits	Flag/Qual	
Decachlorobiphenyl [1]	87.7	30-150		2/25/14 17:31
Decachlorobiphenyl [2]	105	30-150		2/25/14 17:31
Tetrachloro-m-xylene [1]	96.4	30-150		2/25/14 17:31
Tetrachloro-m-xylene [2]	104	30-150		2/25/14 17:31

39 Spruce Street * East Longmeadow, MA 01028 * FAX 413/525-6405 * TEL. 413/525-2332

Project Location: NBHS Mechanical Room., New B Sample Description: Work Order: 14B0540

Date Received: 2/20/2014

Field Sample #: BF-7 4-6 Sampled: 2/19/2014 14:15

Sample ID: 14B0540-31

Sample Matrix: Soil

Conventional Chemistry Parameters by EPA/APHA/SW-846 Methods (Total)

Analyte	Results	RL	Units	Dilution	Flag/Qual	Method	Date Prepared	Date/Time Analyzed	Analyst
% Solids	91.6		% Wt	1		SM 2540G	2/26/14	2/27/14 7:47	MXG

39 Spruce Street * East Longmeadow, MA 01028 * FAX 413/525-6405 * TEL. 413/525-2332

Project Location: NBHS Mechanical Room., New B Sample Description: Work Order: 14B0540

Date Received: 2/20/2014

Field Sample #: BF-7 6-8 Sampled: 2/19/2014 14:20

Sample ID: 14B0540-32

Sample Matrix: Soil

Sample Flags: O-32

Polychlorinated Biphenyls with 3540 Soxhlet Extraction

Analyte	Results	RL	Units	Dilution	Flag/Qual	Method	Date Prepared	Date/Time Analyzed	Analyst
Aroclor-1016 [1]	ND	0.12	mg/Kg dry	5		SW-846 8082A	2/20/14	2/25/14 17:44	MJC
Aroclor-1221 [1]	ND	0.12	mg/Kg dry	5		SW-846 8082A	2/20/14	2/25/14 17:44	MJC
Aroclor-1232 [1]	ND	0.12	mg/Kg dry	5		SW-846 8082A	2/20/14	2/25/14 17:44	MJC
Aroclor-1242 [1]	ND	0.12	mg/Kg dry	5		SW-846 8082A	2/20/14	2/25/14 17:44	MJC
Aroclor-1248 [1]	ND	0.12	mg/Kg dry	5		SW-846 8082A	2/20/14	2/25/14 17:44	MJC
Aroclor-1254 [1]	ND	0.12	mg/Kg dry	5		SW-846 8082A	2/20/14	2/25/14 17:44	MJC
Aroclor-1260 [1]	ND	0.12	mg/Kg dry	5		SW-846 8082A	2/20/14	2/25/14 17:44	MJC
Aroclor-1262 [1]	ND	0.12	mg/Kg dry	5		SW-846 8082A	2/20/14	2/25/14 17:44	MJC
Aroclor-1268 [1]	ND	0.12	mg/Kg dry	5		SW-846 8082A	2/20/14	2/25/14 17:44	MJC

Surrogates	% Recovery	Recovery Limits	Flag/Qual	
Decachlorobiphenyl [1]	88.2	30-150		2/25/14 17:44
Decachlorobiphenyl [2]	106	30-150		2/25/14 17:44
Tetrachloro-m-xylene [1]	81.8	30-150		2/25/14 17:44
Tetrachloro-m-xylene [2]	87.1	30-150		2/25/14 17:44

39 Spruce Street * East Longmeadow, MA 01028 * FAX 413/525-6405 * TEL. 413/525-2332

Project Location: NBHS Mechanical Room., New B Sample Description: Work Order: 14B0540

Date Received: 2/20/2014

Field Sample #: BF-7 6-8 Sampled: 2/19/2014 14:20

Sample ID: 14B0540-32

Sample Matrix: Soil

Conventional Chemistry Parameters by EPA/APHA/SW-846 Methods (Total)

Analyte	Results	RL	Units	Dilution	Flag/Qual	Method	Date Prepared	Date/Time Analyzed	Analyst
% Solids	85.6		% Wt	1		SM 2540G	2/26/14	2/27/14 7:47	MXG

con-test® ANALYTICAL LABORATORY

39 Spruce Street * East Longmeadow, MA 01028 * FAX 413/525-6405 * TEL. 413/525-2332

Project Location: NBHS Mechanical Room., New B Sample Description: Work Order: 14B0540

Date Received: 2/20/2014

Field Sample #: BF-7 8-10 Sampled: 2/19/2014 14:40

Sample ID: 14B0540-33

Sample Matrix: Soil

Sample Flags: O-32

Polychlorinated Biphenyls with 3540 Soxhlet Extraction

Analyte	Results	RL	Units	Dilution	Flag/Qual	Method	Date Prepared	Date/Time Analyzed	Analyst
Aroclor-1016 [1]	ND	0.12	mg/Kg dry	5		SW-846 8082A	2/20/14	2/25/14 17:57	MJC
Aroclor-1221 [1]	ND	0.12	mg/Kg dry	5		SW-846 8082A	2/20/14	2/25/14 17:57	MJC
Aroclor-1232 [1]	ND	0.12	mg/Kg dry	5		SW-846 8082A	2/20/14	2/25/14 17:57	MJC
Aroclor-1242 [1]	ND	0.12	mg/Kg dry	5		SW-846 8082A	2/20/14	2/25/14 17:57	MJC
Aroclor-1248 [1]	ND	0.12	mg/Kg dry	5		SW-846 8082A	2/20/14	2/25/14 17:57	MJC
Aroclor-1254 [1]	ND	0.12	mg/Kg dry	5		SW-846 8082A	2/20/14	2/25/14 17:57	MJC
Aroclor-1260 [1]	ND	0.12	mg/Kg dry	5		SW-846 8082A	2/20/14	2/25/14 17:57	MJC
Aroclor-1262 [1]	ND	0.12	mg/Kg dry	5		SW-846 8082A	2/20/14	2/25/14 17:57	MJC
Aroclor-1268 [1]	ND	0.12	mg/Kg dry	5		SW-846 8082A	2/20/14	2/25/14 17:57	MJC

Surrogates	% Recovery	Recovery Limits	Flag/Qual	
Decachlorobiphenyl [1]	92.8	30-150		2/25/14 17:57
Decachlorobiphenyl [2]	109	30-150		2/25/14 17:57
Tetrachloro-m-xylene [1]	96.7	30-150		2/25/14 17:57
Tetrachloro-m-xylene [2]	103	30-150		2/25/14 17:57

39 Spruce Street * East Longmeadow, MA 01028 * FAX 413/525-6405 * TEL. 413/525-2332

Project Location: NBHS Mechanical Room., New B Sample Description: Work Order: 14B0540

Date Received: 2/20/2014

Field Sample #: BF-7 8-10 Sampled: 2/19/2014 14:40

Sample ID: 14B0540-33

Sample Matrix: Soil

Conventional Chemistry Parameters by EPA/APHA/SW-846 Methods (Total)

Analyte	Results	RL	Units	Dilution	Flag/Qual	Method	Date Prepared	Date/Time Analyzed	Analyst
% Solids	84.0		% Wt	1		SM 2540G	2/26/14	2/27/14 7:47	MXG

39 Spruce Street * East Longmeadow, MA 01028 * FAX 413/525-6405 * TEL. 413/525-2332

Project Location: NBHS Mechanical Room., New B Sample Description: Work Order: 14B0540

Date Received: 2/20/2014

Field Sample #: BF-7 10-12 Sampled: 2/19/2014 14:50

Sample ID: 14B0540-34

Sample Matrix: Soil

Sample Flags: O-32

Polychlorinated Biphenyls with 3540 Soxhlet Extraction

Analyte	Results	RL	Units	Dilution	Flag/Qual	Method	Date Prepared	Date/Time Analyzed	Analyst
Aroclor-1016 [1]	ND	0.11	mg/Kg dry	5		SW-846 8082A	2/20/14	2/25/14 18:10	MJC
Aroclor-1221 [1]	ND	0.11	mg/Kg dry	5		SW-846 8082A	2/20/14	2/25/14 18:10	MJC
Aroclor-1232 [1]	ND	0.11	mg/Kg dry	5		SW-846 8082A	2/20/14	2/25/14 18:10	MJC
Aroclor-1242 [1]	ND	0.11	mg/Kg dry	5		SW-846 8082A	2/20/14	2/25/14 18:10	MJC
Aroclor-1248 [1]	ND	0.11	mg/Kg dry	5		SW-846 8082A	2/20/14	2/25/14 18:10	MJC
Aroclor-1254 [1]	ND	0.11	mg/Kg dry	5		SW-846 8082A	2/20/14	2/25/14 18:10	MJC
Aroclor-1260 [1]	ND	0.11	mg/Kg dry	5		SW-846 8082A	2/20/14	2/25/14 18:10	MJC
Aroclor-1262 [1]	ND	0.11	mg/Kg dry	5		SW-846 8082A	2/20/14	2/25/14 18:10	MJC
Aroclor-1268 [1]	ND	0.11	mg/Kg dry	5		SW-846 8082A	2/20/14	2/25/14 18:10	MJC

Surrogates	% Recovery	Recovery Limits	Flag/Qual	
Decachlorobiphenyl [1]	92.7	30-150		2/25/14 18:10
Decachlorobiphenyl [2]	109	30-150		2/25/14 18:10
Tetrachloro-m-xylene [1]	91.0	30-150		2/25/14 18:10
Tetrachloro-m-xylene [2]	96.7	30-150		2/25/14 18:10

39 Spruce Street * East Longmeadow, MA 01028 * FAX 413/525-6405 * TEL. 413/525-2332

Project Location: NBHS Mechanical Room., New B Sample Description: Work Order: 14B0540

Date Received: 2/20/2014

Field Sample #: BF-7 10-12 Sampled: 2/19/2014 14:50

Sample ID: 14B0540-34

Sample Matrix: Soil

Conventional Chemistry Parameters by EPA/APHA/SW-846 Methods (Total)

Analyte	Results	RL	Units	Dilution	Flag/Qual	Method	Date Prepared	Date/Time Analyzed	Analyst
% Solids	89.7		% Wt	1		SM 2540G	2/26/14	2/27/14 7:47	MXG

con-test® ANALYTICAL LABORATORY

39 Spruce Street * East Longmeadow, MA 01028 * FAX 413/525-6405 * TEL. 413/525-2332

Project Location: NBHS Mechanical Room., New B Sample Description: Work Order: 14B0540

Date Received: 2/20/2014

Field Sample #: DUP-2 Sampled: 2/19/2014 00:00

Sample ID: 14B0540-35

Sample Matrix: Soil

Sample Flags: O-32

Polychlorinated Biphenyls with 3540 Soxhlet Extraction

Analyte	Results	RL	Units	Dilution	Flag/Qual	Method	Date Prepared	Date/Time Analyzed	Analyst
Aroclor-1016 [1]	ND	0.11	mg/Kg dry	5		SW-846 8082A	2/20/14	2/25/14 18:23	MJC
Aroclor-1221 [1]	ND	0.11	mg/Kg dry	5		SW-846 8082A	2/20/14	2/25/14 18:23	MJC
Aroclor-1232 [1]	ND	0.11	mg/Kg dry	5		SW-846 8082A	2/20/14	2/25/14 18:23	MJC
Aroclor-1242 [1]	ND	0.11	mg/Kg dry	5		SW-846 8082A	2/20/14	2/25/14 18:23	MJC
Aroclor-1248 [1]	ND	0.11	mg/Kg dry	5		SW-846 8082A	2/20/14	2/25/14 18:23	MJC
Aroclor-1254 [1]	ND	0.11	mg/Kg dry	5		SW-846 8082A	2/20/14	2/25/14 18:23	MJC
Aroclor-1260 [1]	ND	0.11	mg/Kg dry	5		SW-846 8082A	2/20/14	2/25/14 18:23	MJC
Aroclor-1262 [1]	ND	0.11	mg/Kg dry	5		SW-846 8082A	2/20/14	2/25/14 18:23	MJC
Aroclor-1268 [1]	ND	0.11	mg/Kg dry	5		SW-846 8082A	2/20/14	2/25/14 18:23	MJC

Surrogates	% Recovery	Recovery Limits	Flag/Qual	
Decachlorobiphenyl [1]	94.6	30-150		2/25/14 18:23
Decachlorobiphenyl [2]	111	30-150		2/25/14 18:23
Tetrachloro-m-xylene [1]	98.1	30-150		2/25/14 18:23
Tetrachloro-m-xylene [2]	105	30-150		2/25/14 18:23

39 Spruce Street * East Longmeadow, MA 01028 * FAX 413/525-6405 * TEL. 413/525-2332

Project Location: NBHS Mechanical Room., New B Sample Description: Work Order: 14B0540

Date Received: 2/20/2014

Field Sample #: DUP-2 Sampled: 2/19/2014 00:00

Sample ID: 14B0540-35

Sample Matrix: Soil

Conventional Chemistry Parameters by EPA/APHA/SW-846 Methods (Total)

Analyte	Results	RL	Units	Dilution	Flag/Qual	Method	Date Prepared	Date/Time Analyzed	Analyst
% Solids	85.6		% Wt	1		SM 2540G	2/26/14	2/27/14 7:47	MXG

con-test® ANALYTICAL LABORATORY

39 Spruce Street * East Longmeadow, MA 01028 * FAX 413/525-6405 * TEL. 413/525-2332

Sample Extraction Data

Prep Method: % Solids-SM 2540G

Lab Number [Field ID]	Batch	Date
14B0540-01 [BF-1 2-4]	B090943	02/26/14
14B0540-02 [BF-1 4-6]	B090943	02/26/14
14B0540-03 [BF-1 6-8]	B090943	02/26/14
14B0540-04 [BF-2 2-4]	B090943	02/26/14
14B0540-05 [BF-2 4-6]	B090943	02/26/14
14B0540-06 [BF-2 6-8]	B090943	02/26/14
14B0540-07 [BF-2 8-10]	B090943	02/26/14
14B0540-08 [BF-2 10-12]	B090943	02/26/14
14B0540-09 [DUP-1]	B090943	02/26/14
14B0540-10 [BF-3 2-4]	B090943	02/26/14
14B0540-11 [BF-3 4-6]	B090943	02/26/14
14B0540-12 [BF-3 6-8]	B090943	02/26/14
14B0540-13 [BF-3 8-10]	B090943	02/26/14
14B0540-14 [BF-3 10-12]	B090943	02/26/14
14B0540-15 [BF-4 2-4]	B090943	02/26/14
14B0540-16 [BF-4 4-6]	B090943	02/26/14
14B0540-17 [BF-4 6-8]	B090943	02/26/14
14B0540-18 [BF-4 8-10]	B090943	02/26/14
14B0540-19 [BF-4 10-12]	B090943	02/26/14
14B0540-20 [BF-5 2-4]	B090943	02/26/14
14B0540-21 [BF-5 4-6]	B090943	02/26/14
14B0540-22 [BF-5 6-8]	B090943	02/26/14
14B0540-23 [BF-5 8-10]	B090943	02/26/14
14B0540-24 [BF-5 10-12]	B090943	02/26/14
14B0540-25 [BF-6 2-4]	B090943	02/26/14
14B0540-26 [BF-6 4-6]	B090943	02/26/14
14B0540-27 [BF-6 6-8]	B090943	02/26/14
14B0540-28 [BF-6 8-10]	B090943	02/26/14
14B0540-29 [BF-6 10-12]	B090943	02/26/14
14B0540-30 [BF-7 2-4]	B090943	02/26/14
14B0540-31 [BF-7 4-6]	B090943	02/26/14
14B0540-32 [BF-7 6-8]	B090943	02/26/14
14B0540-33 [BF-7 8-10]	B090943	02/26/14
14B0540-34 [BF-7 10-12]	B090943	02/26/14
14B0540-35 [DUP-2]	B090943	02/26/14

Prep Method: SW-846 3540C-SW-846 8082A

Lab Number [Field ID]	Batch	Initial [g]	Final [mL]	Date
14B0540-01 [BF-1 2-4]	B090677	10.3	10.0	02/20/14
14B0540-02 [BF-1 4-6]	B090677	10.8	10.0	02/20/14
14B0540-03 [BF-1 6-8]	B090677	10.1	10.0	02/20/14
14B0540-04 [BF-2 2-4]	B090677	10.8	10.0	02/20/14
14B0540-05 [BF-2 4-6]	B090677	10.3	10.0	02/20/14
14B0540-06 [BF-2 6-8]	B090677	10.1	10.0	02/20/14
14B0540-07 [BF-2 8-10]	B090677	10.3	10.0	02/20/14
14B0540-08 [BF-2 10-12]	B090677	10.6	10.0	02/20/14
14B0540-09 [DUP-1]	B090677	10.2	10.0	02/20/14
14B0540-10 [BF-3 2-4]	B090677	10.3	10.0	02/20/14
14B0540-11 [BF-3 4-6]	B090677	10.2	10.0	02/20/14
14B0540-12 [BF-3 6-8]	B090677	10.4	10.0	02/20/14
14B0540-13 [BF-3 8-10]	B090677	10.5	10.0	02/20/14
14B0540-14 [BF-3 10-12]	B090677	10.4	10.0	02/20/14
14B0540-15 [BF-4 2-4]	B090677	10.2	10.0	02/20/14

39 Spruce Street * East Longmeadow, MA 01028 * FAX 413/525-6405 * TEL. 413/525-2332

Sample Extraction Data

Prep Method: SW-846 3540C-SW-846 8082A

Lab Number [Field ID]	Batch	Initial [g]	Final [mL]	Date
14B0540-16 [BF-4 4-6]	B090677	10.2	10.0	02/20/14
14B0540-17 [BF-4 6-8]	B090677	10.2	10.0	02/20/14
14B0540-18 [BF-4 8-10]	B090677	10.2	10.0	02/20/14
14B0540-19 [BF-4 10-12]	B090677	10.4	10.0	02/20/14
14B0540-20 [BF-5 2-4]	B090677	10.6	10.0	02/20/14

Prep Method: SW-846 3540C-SW-846 8082A

Lab Number [Field ID]	Batch	Initial [g]	Final [mL]	Date
14B0540-21 [BF-5 4-6]	B090680	10.0	10.0	02/20/14
14B0540-22 [BF-5 6-8]	B090680	10.3	10.0	02/20/14
14B0540-23 [BF-5 8-10]	B090680	10.3	10.0	02/20/14
14B0540-24 [BF-5 10-12]	B090680	10.0	10.0	02/20/14
14B0540-25 [BF-6 2-4]	B090680	10.2	10.0	02/20/14
14B0540-26 [BF-6 4-6]	B090680	10.0	10.0	02/20/14
14B0540-27 [BF-6 6-8]	B090680	10.0	10.0	02/20/14
14B0540-28 [BF-6 8-10]	B090680	10.1	10.0	02/20/14
14B0540-29 [BF-6 10-12]	B090680	10.1	10.0	02/20/14
14B0540-30 [BF-7 2-4]	B090680	10.2	10.0	02/20/14
14B0540-31 [BF-7 4-6]	B090680	10.0	10.0	02/20/14
14B0540-32 [BF-7 6-8]	B090680	10.1	10.0	02/20/14
14B0540-33 [BF-7 8-10]	B090680	10.1	10.0	02/20/14
14B0540-34 [BF-7 10-12]	B090680	10.1	10.0	02/20/14
14B0540-35 [DUP-2]	B090680	10.2	10.0	02/20/14

con-test® ANALYTICAL LABORATORY

39 Spruce Street * East Longmeadow, MA 01028 * FAX 413/525-6405 * TEL. 413/525-2332

QUALITY CONTROL

Polychlorinated Biphenyls with 3540 Soxhlet Extraction - Quality Control

Analyte	Result	Reporting Limit	Units	Spike Level	Source Result	%REC	%REC Limits	RPD	RPD Limit	Notes
Batch B090677 - SW-846 3540C										
Blank (B090677-BLK1)				Prepared: 02/20/14 Analyzed: 02/25/14						
Aroclor-1016	ND	0.020	mg/Kg wet							
Aroclor-1016 [2C]	ND	0.020	mg/Kg wet							
Aroclor-1221	ND	0.020	mg/Kg wet							
Aroclor-1221 [2C]	ND	0.020	mg/Kg wet							
Aroclor-1232	ND	0.020	mg/Kg wet							
Aroclor-1232 [2C]	ND	0.020	mg/Kg wet							
Aroclor-1242	ND	0.020	mg/Kg wet							
Aroclor-1242 [2C]	ND	0.020	mg/Kg wet							
Aroclor-1248	ND	0.020	mg/Kg wet							
Aroclor-1248 [2C]	ND	0.020	mg/Kg wet							
Aroclor-1254	ND	0.020	mg/Kg wet							
Aroclor-1254 [2C]	ND	0.020	mg/Kg wet							
Aroclor-1260	ND	0.020	mg/Kg wet							
Aroclor-1260 [2C]	ND	0.020	mg/Kg wet							
Aroclor-1262	ND	0.020	mg/Kg wet							
Aroclor-1262 [2C]	ND	0.020	mg/Kg wet							
Aroclor-1268	ND	0.020	mg/Kg wet							
Aroclor-1268 [2C]	ND	0.020	mg/Kg wet							
Surrogate: Decachlorobiphenyl	*0.169*		mg/Kg wet	0.200		84.7	30-150			
Surrogate: Decachlorobiphenyl [2C]	*0.204*		mg/Kg wet	0.200		102	30-150			
Surrogate: Tetrachloro-m-xylene	*0.143*		mg/Kg wet	0.200		71.5	30-150			
Surrogate: Tetrachloro-m-xylene [2C]	*0.155*		mg/Kg wet	0.200		77.6	30-150			
LCS (B090677-BS1)				Prepared: 02/20/14 Analyzed: 02/25/14						
Aroclor-1016	0.21	0.10	mg/Kg wet	0.200		106	40-140			
Aroclor-1016 [2C]	0.23	0.10	mg/Kg wet	0.200		116	40-140			
Aroclor-1260	0.22	0.10	mg/Kg wet	0.200		110	40-140			
Aroclor-1260 [2C]	0.24	0.10	mg/Kg wet	0.200		118	40-140			
Surrogate: Decachlorobiphenyl	*0.200*		mg/Kg wet	0.200		100	30-150			
Surrogate: Decachlorobiphenyl [2C]	*0.224*		mg/Kg wet	0.200		112	30-150			
Surrogate: Tetrachloro-m-xylene	*0.193*		mg/Kg wet	0.200		96.5	30-150			
Surrogate: Tetrachloro-m-xylene [2C]	*0.202*		mg/Kg wet	0.200		101	30-150			
LCS Dup (B090677-BSD1)				Prepared: 02/20/14 Analyzed: 02/25/14						
Aroclor-1016	0.23	0.10	mg/Kg wet	0.200		113	40-140	6.12	30	
Aroclor-1016 [2C]	0.25	0.10	mg/Kg wet	0.200		123	40-140	6.23	30	
Aroclor-1260	0.23	0.10	mg/Kg wet	0.200		116	40-140	5.74	30	
Aroclor-1260 [2C]	0.25	0.10	mg/Kg wet	0.200		126	40-140	6.18	30	
Surrogate: Decachlorobiphenyl	*0.208*		mg/Kg wet	0.200		104	30-150			
Surrogate: Decachlorobiphenyl [2C]	*0.235*		mg/Kg wet	0.200		117	30-150			
Surrogate: Tetrachloro-m-xylene	*0.197*		mg/Kg wet	0.200		98.3	30-150			
Surrogate: Tetrachloro-m-xylene [2C]	*0.205*		mg/Kg wet	0.200		102	30-150			

con-test® ANALYTICAL LABORATORY

39 Spruce Street * East Longmeadow, MA 01028 * FAX 413/525-6405 * TEL. 413/525-2332

QUALITY CONTROL

Polychlorinated Biphenyls with 3540 Soxhlet Extraction - Quality Control

Analyte	Result	Reporting Limit	Units	Spike Level	Source Result	%REC		%REC Limits	RPD		RPD Limit	Notes
Batch B090677 - SW-846 3540C												
Matrix Spike (B090677-MS1)		**Source: 14B0540-16**		Prepared: 02/20/14 Analyzed: 02/26/14								
Aroclor-1016	10	0.11	mg/Kg dry	0.218	0.0	**4600**	*	40-140				MS-21
Aroclor-1016 [2C]	17	0.11	mg/Kg dry	0.218	0.0	**7620**	*	40-140				MS-21, R-06
Aroclor-1260	5.0	0.11	mg/Kg dry	0.218	0.0	**2300**	*	40-140				R-06, MS-21
Aroclor-1260 [2C]	6.6	0.11	mg/Kg dry	0.218	0.0	**3030**	*	40-140				MS-21, R-06
Surrogate: Decachlorobiphenyl	*0.214*		mg/Kg dry	0.218		97.9		30-150				
Surrogate: Decachlorobiphenyl [2C]	*0.243*		mg/Kg dry	0.218		111		30-150				
Surrogate: Tetrachloro-m-xylene	*0.213*		mg/Kg dry	0.218		97.5		30-150				
Surrogate: Tetrachloro-m-xylene [2C]	*0.229*		mg/Kg dry	0.218		105		30-150				
Matrix Spike Dup (B090677-MSD1)		**Source: 14B0540-16**		Prepared: 02/20/14 Analyzed: 02/26/14								
Aroclor-1016	16	0.11	mg/Kg dry	0.218	0.0	**7290**	*	40-140	45.4		50	MS-21
Aroclor-1016 [2C]	28	0.11	mg/Kg dry	0.218	0.0	**12900**	*	40-140	**51.5**	*	50	MS-21, R-06
Aroclor-1260	8.6	0.11	mg/Kg dry	0.218	0.0	**3940**	*	40-140	**52.5**	*	50	MS-21, R-06
Aroclor-1260 [2C]	14	0.11	mg/Kg dry	0.218	0.0	**6320**	*	40-140	**70.4**	*	50	MS-21, R-06
Surrogate: Decachlorobiphenyl	*0.271*		mg/Kg dry	0.218		124		30-150				
Surrogate: Decachlorobiphenyl [2C]	*0.320*		mg/Kg dry	0.218		147		30-150				
Surrogate: Tetrachloro-m-xylene	*0.257*		mg/Kg dry	0.218		118		30-150				
Surrogate: Tetrachloro-m-xylene [2C]	*0.282*		mg/Kg dry	0.218		129		30-150				
Batch B090680 - SW-846 3540C												
Blank (B090680-BLK1)				Prepared: 02/20/14 Analyzed: 02/25/14								
Aroclor-1016	ND	0.020	mg/Kg wet									
Aroclor-1016 [2C]	ND	0.020	mg/Kg wet									
Aroclor-1221	ND	0.020	mg/Kg wet									
Aroclor-1221 [2C]	ND	0.020	mg/Kg wet									
Aroclor-1232	ND	0.020	mg/Kg wet									
Aroclor-1232 [2C]	ND	0.020	mg/Kg wet									
Aroclor-1242	ND	0.020	mg/Kg wet									
Aroclor-1242 [2C]	ND	0.020	mg/Kg wet									
Aroclor-1248	ND	0.020	mg/Kg wet									
Aroclor-1248 [2C]	ND	0.020	mg/Kg wet									
Aroclor-1254	ND	0.020	mg/Kg wet									
Aroclor-1254 [2C]	ND	0.020	mg/Kg wet									
Aroclor-1260	ND	0.020	mg/Kg wet									
Aroclor-1260 [2C]	ND	0.020	mg/Kg wet									
Aroclor-1262	ND	0.020	mg/Kg wet									
Aroclor-1262 [2C]	ND	0.020	mg/Kg wet									
Aroclor-1268	ND	0.020	mg/Kg wet									
Aroclor-1268 [2C]	ND	0.020	mg/Kg wet									
Surrogate: Decachlorobiphenyl	*0.187*		mg/Kg wet	0.200		93.5		30-150				
Surrogate: Decachlorobiphenyl [2C]	*0.226*		mg/Kg wet	0.200		113		30-150				
Surrogate: Tetrachloro-m-xylene	*0.162*		mg/Kg wet	0.200		81.2		30-150				
Surrogate: Tetrachloro-m-xylene [2C]	*0.179*		mg/Kg wet	0.200		89.4		30-150				

con-test® ANALYTICAL LABORATORY

39 Spruce Street * East Longmeadow, MA 01028 * FAX 413/525-6405 * TEL. 413/525-2332

QUALITY CONTROL

Polychlorinated Biphenyls with 3540 Soxhlet Extraction - Quality Control

Analyte	Result	Reporting Limit	Units	Spike Level	Source Result	%REC		%REC Limits	RPD		RPD Limit	Notes
Batch B090680 - SW-846 3540C												
LCS (B090680-BS1)				Prepared: 02/20/14 Analyzed: 02/25/14								
Aroclor-1016	0.20	0.10	mg/Kg wet	0.200		99.0		40-140				
Aroclor-1016 [2C]	0.22	0.10	mg/Kg wet	0.200		109		40-140				
Aroclor-1260	0.20	0.10	mg/Kg wet	0.200		101		40-140				
Aroclor-1260 [2C]	0.22	0.10	mg/Kg wet	0.200		111		40-140				
Surrogate: Decachlorobiphenyl	*0.187*		mg/Kg wet	0.200		93.4		30-150				
Surrogate: Decachlorobiphenyl [2C]	*0.209*		mg/Kg wet	0.200		104		30-150				
Surrogate: Tetrachloro-m-xylene	*0.174*		mg/Kg wet	0.200		86.9		30-150				
Surrogate: Tetrachloro-m-xylene [2C]	*0.181*		mg/Kg wet	0.200		90.3		30-150				
LCS Dup (B090680-BSD1)				Prepared: 02/20/14 Analyzed: 02/25/14								
Aroclor-1016	0.21	0.10	mg/Kg wet	0.200		106		40-140	7.16		30	
Aroclor-1016 [2C]	0.24	0.10	mg/Kg wet	0.200		118		40-140	8.21		30	
Aroclor-1260	0.23	0.10	mg/Kg wet	0.200		113		40-140	11.2		30	
Aroclor-1260 [2C]	0.25	0.10	mg/Kg wet	0.200		124		40-140	10.6		30	
Surrogate: Decachlorobiphenyl	*0.205*		mg/Kg wet	0.200		102		30-150				
Surrogate: Decachlorobiphenyl [2C]	*0.231*		mg/Kg wet	0.200		115		30-150				
Surrogate: Tetrachloro-m-xylene	*0.174*		mg/Kg wet	0.200		86.8		30-150				
Surrogate: Tetrachloro-m-xylene [2C]	*0.181*		mg/Kg wet	0.200		90.4		30-150				
Matrix Spike (B090680-MS1)		**Source: 14B0540-21**		Prepared: 02/20/14 Analyzed: 02/25/14								
Aroclor-1016	0.24	0.11	mg/Kg dry	0.223	0.0	110		40-140				R-06
Aroclor-1016 [2C]	0.35	0.11	mg/Kg dry	0.223	0.0	**156**	*	40-140				MS-21, R-06
Aroclor-1260	0.39	0.11	mg/Kg dry	0.223	0.0	**177**	*	40-140				MS-21
Aroclor-1260 [2C]	0.48	0.11	mg/Kg dry	0.223	0.0	**214**	*	40-140				MS-21
Surrogate: Decachlorobiphenyl	*0.199*		mg/Kg dry	0.223		89.2		30-150				
Surrogate: Decachlorobiphenyl [2C]	*0.230*		mg/Kg dry	0.223		103		30-150				
Surrogate: Tetrachloro-m-xylene	*0.177*		mg/Kg dry	0.223		79.5		30-150				
Surrogate: Tetrachloro-m-xylene [2C]	*0.188*		mg/Kg dry	0.223		84.3		30-150				
Matrix Spike Dup (B090680-MSD1)		**Source: 14B0540-21**		Prepared: 02/20/14 Analyzed: 02/25/14								
Aroclor-1016	0.45	0.11	mg/Kg dry	0.223	0.0	**202**	*	40-140	**59.0**	*	50	R-06, MS-21
Aroclor-1016 [2C]	0.92	0.11	mg/Kg dry	0.223	0.0	**412**	*	40-140	**90.2**	*	50	MS-21, R-06
Aroclor-1260	0.62	0.11	mg/Kg dry	0.223	0.0	**279**	*	40-140	44.7		50	MS-21
Aroclor-1260 [2C]	0.78	0.11	mg/Kg dry	0.223	0.0	**351**	*	40-140	48.5		50	MS-21
Surrogate: Decachlorobiphenyl	*0.217*		mg/Kg dry	0.223		97.5		30-150				
Surrogate: Decachlorobiphenyl [2C]	*0.252*		mg/Kg dry	0.223		113		30-150				
Surrogate: Tetrachloro-m-xylene	*0.217*		mg/Kg dry	0.223		97.6		30-150				
Surrogate: Tetrachloro-m-xylene [2C]	*0.233*		mg/Kg dry	0.223		104		30-150				

con-test® ANALYTICAL LABORATORY

39 Spruce Street * East Longmeadow, MA 01028 * FAX 413/525-6405 * TEL. 413/525-2332

QUALITY CONTROL

Conventional Chemistry Parameters by EPA/APHA/SW-846 Methods (Total) - Quality Control

Analyte	Result	Reporting Limit	Units	Spike Level	Source Result	%REC	%REC Limits	RPD	RPD Limit	Notes
Batch B090943 - % Solids										
Duplicate (B090943-DUP4)		**Source: 14B0540-01**		Prepared: 02/26/14 Analyzed: 02/27/14						
% Solids	91.1		% Wt		91.2			0.110	20	
Duplicate (B090943-DUP5)		**Source: 14B0540-16**		Prepared: 02/26/14 Analyzed: 02/27/14						
% Solids	91.0		% Wt		91.6			0.657	20	
Duplicate (B090943-DUP6)		**Source: 14B0540-21**		Prepared: 02/26/14 Analyzed: 02/27/14						
% Solids	90.0		% Wt		89.8			0.222	20	
Duplicate (B090943-DUP7)		**Source: 14B0540-35**		Prepared: 02/26/14 Analyzed: 02/27/14						
% Solids	85.3		% Wt		85.6			0.351	20	

39 Spruce Street * East Longmeadow, MA 01028 * FAX 413/525-6405 * TEL. 413/525-2332

FLAG/QUALIFIER SUMMARY

*	QC result is outside of established limits.
†	Wide recovery limits established for difficult compound.
‡	Wide RPD limits established for difficult compound.
#	Data exceeded client recommended or regulatory level
	Percent recoveries and relative percent differences (RPDs) are determined by the software using values in the calculation which have not been rounded.
	No results have been blank subtracted unless specified in the case narrative section.
MS-21	Matrix spike and/or spike duplicate recovery bias high due to contribution of other Aroclors present in the source sample.
O-03	Sample contains two incompletely resolved aroclors. Aroclor with the closest matching pattern is reported.
O-32	A five times dilution was performed as part of the standard analytical procedure.
R-06	Matrix spike duplicate RPD is outside of control limits. Reduced precision is anticipated for reported result for this compound in this sample.
S-01	The surrogate recovery for this sample is not available due to sample dilution below the surrogate reporting limit required from high analyte concentration and/or matrix interferences.

39 Spruce Street * East Longmeadow, MA 01028 * FAX 413/525-6405 * TEL. 413/525-2332

CERTIFICATIONS

Certified Analyses included in this Report

Analyte	Certifications
SW-846 8082A in Soil	
Aroclor-1016	CT,NH,NY,ME,NC,VA,NJ
Aroclor-1016 [2C]	CT,NH,NY,ME,NC,VA,NJ
Aroclor-1221	CT,NH,NY,ME,NC,VA,NJ
Aroclor-1221 [2C]	CT,NH,NY,ME,NC,VA,NJ
Aroclor-1232	CT,NH,NY,ME,NC,VA,NJ
Aroclor-1232 [2C]	CT,NH,NY,ME,NC,VA,NJ
Aroclor-1242	CT,NH,NY,ME,NC,VA,NJ
Aroclor-1242 [2C]	CT,NH,NY,ME,NC,VA,NJ
Aroclor-1248	CT,NH,NY,ME,NC,VA,NJ
Aroclor-1248 [2C]	CT,NH,NY,ME,NC,VA,NJ
Aroclor-1254	CT,NH,NY,ME,NC,VA,NJ
Aroclor-1254 [2C]	CT,NH,NY,ME,NC,VA,NJ
Aroclor-1260	CT,NH,NY,ME,NC,VA,NJ
Aroclor-1260 [2C]	CT,NH,NY,ME,NC,VA,NJ

The CON-TEST Environmental Laboratory operates under the following certifications and accreditations:

Code	Description	Number	Expires
AIHA	AIHA-LAP, LLC	100033	02/1/2016
MA	Massachusetts DEP	M-MA100	06/30/2014
CT	Connecticut Department of Publilc Health	PH-0567	09/30/2015
NY	New York State Department of Health	10899 NELAP	04/1/2014
NH-S	New Hampshire Environmental Lab	2516 NELAP	02/5/2015
RI	Rhode Island Department of Health	LAO00112	12/30/2014
NC	North Carolina Div. of Water Quality	652	12/31/2014
NJ	New Jersey DEP	MA007 NELAP	06/30/2014
FL	Florida Department of Health	E871027 NELAP	06/30/2014
VT	Vermont Department of Health Lead Laboratory	LL015036	07/30/2014
WA	State of Washington Department of Ecology	C2065	02/23/2015
ME	State of Maine	2011028	06/9/2015
VA	Commonwealth of Virginia	460217	12/14/2014
NH-P	New Hampshire Environmental Lab	2557 NELAP	09/6/2014

con-test® ANALYTICAL LABORATORY
Phone: 413-525-2332
Fax: 413-525-6405
Email: info@contestlabs.com
www.contestlabs.com
39 SPRUCE ST, 2ND FLOOR
EAST LONGMEADOW, MA 01028

CHAIN OF CUSTODY RECORD

14B0540

Company Name: TRC
Address: 650 SUFFOLK ST
LOWELL MA 01854
Attention: AL LEONARD/DAVID SULLIVAN/MATT O.
Project Location: NBHS NEW BEDFORD MA
Sampled By: JASON FIERO

Telephone: (978) 970-5600
Project # 115058
Client PO # 66138

DATA DELIVERY (check one):
☐ FAX ☑ EMAIL ☑ WEBSITE CLIENT
Fax #:
Email:
Format: ☑ EXCEL ☑ PDF ☐ GIS KEY

Proposal Provided? (For Billing purposes)
☐ yes ______ proposal date

# of containers: 1 EA
**Preservation: I
~Cont.Code: A

ANALYSIS REQUESTED: 3540C/8082 PCBs BY SOXHLET

Field ID	Sample Description	Lab #	Start Date/~~Time~~	Stop ~~Date~~/Time	Composite	Grab	*Matrix Code	3540C/8082 PCBs BY SOXHLET
BF-1	2-4'	01	2/18/14	12:10	✓		S	✓
BF-1	4-6'	02	"	12:20	✓		S	✓
BF-1	6-8'	03	"	12:30	✓		S	✓
BF-2	2-4'	04	"	13:40	✓		S	H
BF-2	4-6'	05	"	13:50	✓		S	✓
BF-2	6-8'	06	"	14:00	✓		S	✓
BF-2	8-10'	07	"	14:10	✓		S	✓
BF-2	10-12'	08	"	14:20	✓		S	✓
DUP-1	N/A	09	"	N/A	✓		S	✓
BF-3	2-4'	10	2/19/14	9:20	✓		S	✓

~Cont. Code:
A=amber glass
G=glass
P=plastic
ST=sterile
V= vial
S=summa can
T=tedlar bag
O=Other

Comments:

Signature	Date/Time
Relinquished by: (signature) [signature]	2/20/14
Received by: (signature) [signature] 2/20/14	10:30
Relinquished by: (signature) [signature] 2/20/14	1650
Received by: (signature) [signature] 3.8°C 2/20/14	1650

Turnaround
☐ 24 Hour*
☐ 48 Hour*
☐ 72 Hour*
☑ Std. 5 Day
☐ Other**
______ Date needed**
*Require lab approval.

Detection Limit Requirements
Regulations? TSCA / MCP
Data Enhancement Project? ☑ Y ☐ N
(MA MCP sites only)
Special Requirements or DL's: < 1 PPM

***Matrix Code:**
GW= groundwater
WW= wastewater
DW= drinking water
A = air
S = soil/solid
SL = sludge
O = other

****Preservation Codes:**
I = Iced
H = HCL
M = Methanol
N = Nitric Acid
S = Sulfuric Acid
B = Sodium bisulfate
O = Other
X = Na hydroxide
T = Na thiosulfate

Con-Test Laboratory is the ONLY independent laboratory in all of New England with both prestigious AIHA and NELAC Certifications!

CHAIN OF CUSTODY RECORD

con-test® ANALYTICAL LABORATORY
Phone: 413-525-2332
Fax: 413-525-6405
Email: info@contestlabs.com
www.contestlabs.com
39 SPRUCE ST, 2ND FLOOR
EAST LONGMEADOW, MA 01028

14B0540

Company Name: TRC
Address: 650 SUFFOLK ST. LOWELL MA. 01854
Attention: A.L. / D.S. / M.O.
Project Location: NBHS NEW BEDFORD MA
Sampled By: JASON FIERO
Proposal Provided? (For Billing purposes) ☐ yes ____ proposal date

Telephone: (978) 970-5600
Project # 115058
Client PO # 66138

DATA DELIVERY (check one): ☐FAX ☑EMAIL ☑WEBSITE CLIENT
Fax #:
Email:
Format: ☐ EXCEL ☐ PDF ☐ GIS KEY

# of containers: 1 EA
**Preservation: I
~Cont.Code: A

ANALYSIS REQUESTED: PCBs BY SOXHLET 3540C/8082

Field ID	Sample Description	Lab #	Start Date/~~Time~~	Stop ~~Date~~/Time	Composite	Grab	*Matrix Code	PCBs by Soxhlet 3540C/8082		Comments
BF-3	4-6'	11	2/19/14	9:40	✓		S	✓		
BF-3	6-8'	12	"	9:50	✓		S	✓		
BF-3	8-10'	13	"	10:10	✓		S	✓		
BF-3	10-12'	14	"	10:20	✓		S	✓		
BF-4	2-4'	15	"	11:15	✓		S	H		
BF-4	4-6'	16	"	11:30	✓		S	✓	MS/MSD	3x vol MS/MSD
BF-4	6-8'	17	"	11:35	✓		S	✓		
BF-4	8-10'	18	"	11:45	✓		S	✓		
BF-4	10-12'	19	"	11:50	✓		S	✓		
BF-5	2-4'	20	"	12:15	✓		S	H		

~Cont. Code: A=amber glass, G=glass, P=plastic, ST=sterile, V= vial, S=summa can, T=tedlar bag, O=Other

Signature	Date/Time
Relinquished by: (signature) [signature]	2/20/14
Received by: (signature) [signature] 2/20/14	10:30
Relinquished by: (signature) [signature] 2/20/14	1650
Received by: (signature) [signature] 2/20/14 5.8°C	1650

Turnaround
☐ 24 Hour*
☐ 48 Hour*
☐ 72 Hour*
☑ Std. 5 day
☐ Other**
Date needed**
*Require lab approval.

Detection Limit Requirements
Regulations? TSCA / MCP
Data Enhancement Project? ☑ Y ☐ N
(MA MCP sites only)
Special Requirements or DL's: < 1 ppm

***Matrix Code:**
GW= groundwater
WW= wastewater
DW= drinking water
A = air
S = soil/solid
SL = sludge
O = other

****Preservation Codes:**
I = Iced
H = HCL
M = Methanol
N = Nitric Acid
S = Sulfuric Acid
B = Sodium bisulfate
O = Other
X = Na hydroxide
T = Na thiosulfate

Con-Test Laboratory is the ONLY independent laboratory in all of New England with both prestigious AIHA and NELAC Certifications!

con-test® ANALYTICAL LABORATORY
Phone: 413-525-2332
Fax: 413-525-6405
Email: info@contestlabs.com
www.contestlabs.com

CHAIN OF CUSTODY RECORD

14B0540

39 SPRUCE ST, 2ND FLOOR
EAST LONGMEADOW, MA 01028

Company Name: TRC
Address: 650 SUFFOLK ST
LOWELL MA 01854
Attention: A.L. / D.SULLIVAN / MATT O.
Project Location: NBKS NEW BEDFORD
Sampled By: JASON FIERO

Telephone: (978) 970-5600
Project # 115058
Client PO # 66138

DATA DELIVERY (check one):
☐ FAX ☑ EMAIL ☑ WEBSITE CLIENT
Fax # :
Email:
Format: ☑ EXCEL ☑ PDF ☐ GIS KEY

Proposal Provided? (For Billing purposes)
☐ yes _____ proposal date

ANALYSIS REQUESTED

Field ID	Sample Description	Lab #	Date Sampled Start Date/Time	Stop Date/Time	Composite	Grab	*Matrix Code	1 EA	1	A	PCBs by SOXHLET 3540C/8082											Comments
								# of containers	**Preservation	~Cont.Code												
BF-5	4-6' (*)	21	2/19/14	12:20	✓		S				✓	MS/MSD(*)										
BF-5	6-8'	22	"	12:30	✓		S				✓											
BF-5	8-10'	23	"	12:45	✓		S				✓											
BF-5	10-12'	24	"	12:50	✓		S				✓											
BF-6	2-4'	25	"	13:10	✓		S				✓											
BF-6	4-6'	26	"	13:20	✓		S				✓											
BF-6	6-8'	27	"	13:30	✓		S				✓											
BF-6	8-10'	28	"	13:40	✓		S				✓											
BF-6	10-12'	29	"	13:45	✓		S				✓											
BF-7	2-4'	30	"	14:05	✓		S				✓											

Comments:
(*) MS/MSD on sample # 21 per client request

Relinquished by: (signature)	Date/Time:
[signature]	2/20/14
Received by: (signature) [signature] 2/20/14	Date/Time: 1030
Relinquished by: (signature) [signature] 2/20/14	Date/Time: 1650
Received by: (signature) Rebecca Stuart 2/20/14	Date/Time: 1650

Turnaround
☐ 24 Hour*
☐ 48 Hour*
☐ 72 Hour*
☑ Std. 5 Day
☐ Other**
_____ Date needed**
*Require lab approval.

Detection Limit Requirements
Regulations? TSCA / MCP
Data Enhancement Project? ☑ Y ☐ N
(MA MCP sites only)
Special Requirements or DL's: < 1 ppm

***Matrix Code:**
GW = groundwater
WW = wastewater
DW = drinking water
A = air
S = soil/solid
SL = sludge
O = other

****Preservation Codes:**
I = Iced
X = Na hydroxide
H = HCL
T = Na thiosulfate
M = Methanol
N = Nitric Acid
S = Sulfuric Acid
B = Sodium bisulfate
O = Other

Con-Test Laboratory is the ONLY independent laboratory in all of New England with both prestigious AIHA and NELAC Certifications!

con-test® ANALYTICAL LABORATORY
Phone: 413-525-2332
Fax: 413-525-6405
Email: info@contestlabs.com
www.contestlabs.com

CHAIN OF CUSTODY RECORD

14B0540

39 Spruce Street
East longmeadow, MA 01028

Company Name: TRC
Telephone: 978-970-5600
Address: 650 SUFFOLK ST
LOWELL MA 01854
Project # 115058
Client PO# 66138
Attention: AL LEONARD / D. SULLIVAN / MATT O.
Project Location: NBHS NEW BEDFORD
Sampled By: JASON FIERO

DATA DELIVERY (check all that apply)
O FAX ✓ EMAIL ✓ WEBSITE
Fax #
Email:
Format: ✓ PDF ✓ EXCEL O GIS
O OTHER
✓ "Enhanced Data Package"

Project Proposal Provided? (for billing purposes)
O yes _____ proposal date

ANALYSIS REQUESTED

Con-Test Lab ID (laboratory use only)	Client Sample ID / Description	Collection Beginning Date/Time	Collection Ending Date/Time	Composite	Grab	*Matrix Code	Conc Code	PCBs by SOXHLET 3540C/8082										# of Containers	** Preservation	***Container Code
								1 EA												A
31	BF-7 4-6'	2/19/14	14:15	✓		S	W	✓												
32	BF-7 6-8'	"	14:20	✓		S	"	✓												
33	BF-7 8-10'	"	14:40	✓		S	"	✓												
34	BF-7 10-12'	"	14:50	✓		S	"	✓												
35	DUP-2	"	N/A	✓		S	"	✓												

Dissolved Metals
O Field Filtered
O Lab to Filter

***Cont. Code:
A=amber glass
G=glass
P=plastic
ST=sterile
V= vial
S=summa can
T=tedlar bag
O=Other

**Preservation
I = iced
H = HCL
M = Methanol
N = Nitric Acid
S = Sulfuric Acid
B = Sodium bisulfate
X = Na hydroxide
T = Na thiosulfate
O = Other _____

*Matrix Code:
GW= groundwater
WW= wastewater
DW= drinking water
A = air
S = soil/solid
SL = sludge
O = other _____

Comments:

Please use the following codes to let Con-Test know if a specific sample may be high in concentration in Matrix/Conc. Code Box:
H - High; M - Medium; L - Low; C - Clean; U - Unknown

Relinquished by: (signature)	Date/Time: 2/20/14
Received by: (signature)	Date/Time: 2/21/14 1030
Relinquished by: (signature)	Date/Time: 2/21/14 1630
Received by: (signature)	Date/Time: 2/21/14 1650

Turnaround ††
☐ 7-Day
☐ 10-Day
☑ Other 5 DAY
RUSH †
☐ †24-Hr ☐ †48-Hr
☐ †72-Hr ☐ †4-Day
† Require lab approval

Detection Limit Requirements
Massachusetts: MCP
Connecticut:
Other: TSCA < 1 ppm

Is your project MCP or RCP ?
✓ MCP Analytical Certification Form Required
O RCP Analysis Certification Form Required
O MA State DW Form Required PWSID # _____

NELAC & AIHA Certified
WBE/DBE Certified

†† TURNAROUND TIME (business days) STARTS AT 9:00 A.M. THE DAY AFTER SAMPLE RECEIPT UNLESS THERE ARE QUESTIONS ON YOUR CHAIN. IF THIS FORM IS NOT FILLED OUT COMPLETELY OR IS INCORRECT, TURNAROUND TIME WILL NOT START UNTIL ALL QUESTIONS ARE ANSWERED.

PLEASE BE CAREFUL NOT TO CONTAMINATE THIS DOCUMENT

) Spruce St.
ıgmeadow, MA. 01028
P: 413-525-2332
F: 413-525-6405
www.contestlabs.com

con-test® ANALYTICAL LABORATORY

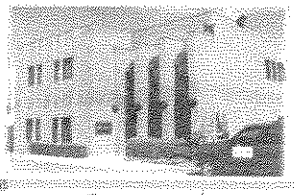

Sample Receipt Checklist

ıIENT NAME: TRC RECEIVED BY: RCF DATE: 2/20/14

1) Was the chain(s) of custody relinquished and signed? (Yes) No No CoC Included
2) Does the chain agree with the samples? (Yes) No
   If not, explain:
3) Are all the samples in good condition? (Yes) No
   If not, explain:
4) How were the samples received:

On Ice [✓] Direct from Sampling [ ] Ambient [ ] In Cooler(s) [✓]

Were the samples received in Temperature Compliance of (2-6°C)? (Yes) No N/A

Temperature °C by Temp blank _____ Temperature °C by Temp gun 5.8°C

5) Are there Dissolved samples for the lab to filter? Yes (No)
   Who was notified _____ Date _____ Time _____
6) Are there any RUSH or SHORT HOLDING TIME samples? Yes (No)
   Who was notified _____ Date _____ Time _____
7) Location where samples are stored: 19

Permission to subcontract samples? Yes No
(Walk-in clients only) if not already approved
Client Signature:

8) Do all samples have the proper Acid pH: Yes No (N/A) _____
9) Do all samples have the proper Base pH: Yes No (N/A) _____
10) Was the PC notified of any discrepancies with the CoC vs the samples: Yes No (N/A)

Containers received at Con-Test

	# of containers		# of containers
1 Liter Amber		8 oz amber/clear jar	
500 mL Amber		4 oz amber/clear jar	35
250 mL Amber (8oz amber)		2 oz amber/clear jar	
1 Liter Plastic		Plastic Bag / Ziploc	
500 mL Plastic		SOC Kit	
250 mL plastic		Non-ConTest Container	
40 mL Vial - type listed below		Perchlorate Kit	
Colisure / bacteria bottle		Flashpoint bottle	
Dissolved Oxygen bottle		Other glass jar	
Encore		Other	

Laboratory Comments:

40 mL vials: # HCl _____ # Methanol _____
Bisulfate _____ # DI Water _____
Thiosulfate _____ Unpreserved _____

Time and Date Frozen:

Doc# 277
Rev. 4 August 2013

Login Sample Receipt Checklist

(Rejection Criteria Listing - Using Sample Acceptance Policy)

Any False statement will be brought to the attention of Client

Question	Answer (True/False) T/F/NA	Comment
1) The cooler's custody seal, if present, is intact.	T	
2) The cooler or samples do not appear to have been compromised or tampered with.	T	
3) Samples were received on ice.	T	
4) Cooler Temperature is acceptable.	T	
5) Cooler Temperature is recorded.	T	
6) COC is filled out in ink and legible.	T	
7) COC is filled out with all pertinent information.	T	
8) Field Sampler's name present on COC.	T	
9) There are no discrepancies between the sample IDs on the container and the COC.	T	
10) Samples are received within Holding Time.	T	
11) Sample containers have legible labels.	T	
12) Containers are not broken or leaking.	T	
13) Air Cassettes are not broken/open.	NA	
14) Sample collection date/times are provided.	T	
15) Appropriate sample containers are used.	T	
16) Proper collection media used.	T	
17) No headspace sample bottles are completely filled.	T	
18) There is sufficient volume for all requsted analyses, including any requested MS/MSDs.	T	
19) Trip blanks provided if applicable.	NA	
20) VOA sample vials do not have head space or bubble is <6mm (1/4") in diameter.	NA	
21) Samples do not require splitting or compositing.	T	

Who notified of False statements? **Date/Time:**

Doc #277 Rev. 4 August 2013 **Log-In Technician Initials:** **Date/Time:**

BLF 2/20/14 1650

MADEP MCP Analytical Method Report Certification Form

Laboratory Name:	Con-Test Analytical Laboratory	Project #:	14B0540
Project Location:	101-102 Greenwood St., New Bedford, MA	RTN:	

This Form provides certifications for the following data set: [list Laboratory Sample ID Number(s)]

14B0540-01 thru 14B0540-35

Matrices: Soil

CAM Protocol (check all that below)

8260 VOC CAM II A ( )	7470/7471 Hg CAM IIIB ( )	MassDEP VPH CAM IV A ( )	8081 Pesticides CAM V B ( )	7196 Hex Cr CAM VI B ( )	MassDEP APH CAM IX A ( )
8270 SVOC CAM II B ( )	7010 Metals CAM III C ( )	MassDEP EPH CAM IV A ( )	8151 Herbicides CAM V C ( )	8330 Explosives CAM VIII A ( )	TO-15 VOC CAM IX B ( )
6010 Metals CAM III A ( )	6020 Metals CAM III D ( )	8082 PCB CAM V A (X)	9014 Total Cyanide/PAC CAM VI A ( )	6860 Perchlorate CAM VIII B ( )	

Affirmative response to Questions A throughF is required for "Presumptive Certainty" status

A	Were all samples received in a condition consistent with those described on the Chain-of-Custody, properly preserved (including temperature) in the field or laboratory, and prepared/analyzed within method holding times?	☑ Yes	☐ No[1]
B	Were the analytical method(s) and all associated QC requirements specificed in the selected CAM protocol(s) followed?	☑ Yes	☐ No[1]
C	Were all required corrective actions and analytical response actions specified in the selected CAM protocol(s) implemented for all identified performance standard non-conformances?	☑ Yes	☐ No[1]
D	Does the laboratory report comply with all the reporting requirements specified in CAM VII A, Quality Assurance and Quality Control Guidlines for the Acquisition and Reporting of Analytical Data?	☑ Yes	☐ No[1]
E a	VPH, EPH, and APH Methods only: Was each method conducted without significant modification(s)? (Refer to the individual method(s) for a list of significant modifications).	☐ Yes	☐ No[1]
E b	APH and TO-15 Methods only: Was the complete analyte list reported for each method?	☐ Yes	☐ No[1]
F	Were all applicable CAM protocol QC and performance standard non-conformances identified and evaluated in a laboratory narrative (including all No responses to Qestions A through E)?	☑ Yes	☐ No[1]

A response to questions G, H and I below is required for "Presumptive Certainty" status

G	Were the reporting limits at or below all CAM reporting limits specified in the selected CAM protocol(s)?	☑ Yes	☐ No[1]

***Data User Note:* Data that achieve "Presumptive Certainty" status may not necessarily meet the data usability and representativeness requirements described in 310 CMR 40. 1056 (2)(k) and WSC-07-350.**

H	Were all QC perfomance standards specified in the CAM protocol(s) achieved?	☐ Yes	☑ No[1]
I	Were results reported for the complete analyte list specified in the selected CAM protocol(s)?	☑ Yes	☐ No[1]

[1] *All Negative responses must be addressed in an attached Environmental Laboratory case narrative.*

I, the undersigned, attest under the pains and penalties of perjury that, based upon my personal inquiry of those responsible for obtaining the information, the material contained in this analytical report is, to the best of my knowledge and belief, accurate and complete.

Signature: M Erickson Position: Laboratory Director

Printed Name: Michael A. Erickson Date: 02/27/14

APPENDIX C

GROUNDWATER SAMPLING FORMS AND SOIL BORING LOGS

Field Instrument Calibration Log

TRC

Date: 1/16/14 Site Name: NBHS

Water Quality Instrument Type / ID: YSI 556 (06K1082AM)

Turbidity Instrument Type / ID: Hach 2100Q (13080C027790)

Date of Last Temperature Probe Check:

Dissolved Oxygen (DO)

Time	Barometric Pressure (mm Hg)	Temperature (° Celsius)	100% Saturation Calibration (On Instrument)	Actual 100% Saturation Calibration (Refer to Attachment A)	Oxygen Solubility at Indicated Pressure (mg/L) (On Instrument)	Actual Oxygen Solubility at Indicated Pressure (mg/L) (Refer to Attachment B)	Zero DO Check (mg/L)	Comments	Initials
1000	770.2	13.01	101.3	101.3	10.68	10.66	0.46		KJ
0815	773.0	13.10	101.6	101.5	10.66	10.69	0.55		KJ

pH

Time	Solution Temperature (° Celsius)	pH 7	pH 4	pH 10	pH 7 Check	Comments	Initials
1012	9.99	7.00	4.00	10.02	7.02		KJ
0825	12.82	7.00	4.00	10.01	6.99		KJ

Specific Conductance

Time	Specific Conductance Reading (umhos/cm3)	Comments	Initials
1022	1000		KJ
0832	1000		KJ

Oxidation Reduction Potential (ORP)

Time	Solution Temperature (° Celsius)	ORP Reading (mV) (Refer to Attachment C)	Actual ORP Reading (mV) (On Instrument)	Comments	Initials
1025	13.33	113.3	113.3		KJ
0838	15.00	111.4	111.4		KJ

Turbidity

Time	Zero Standard	Standard #1 ~~(10 NTUs)~~ 20	Standard #1 ~~(1 NTUs)~~ 100	800	Comments	Initials
1030	—	20.6	96.7	797		KJ
0800	—	21.6	100	786	Verification: 800 reads 807 NTU	KJ

Calibration Fluid ID / Expiration Date:

Zero DO: 201623821 / 2 weeks after #0 added

Specific Conductance: 3AA781 1/31/2014

pH 4: 3AE705 Exp. 5/13/2015

ph 7: 3AE365 Exp. 5/30/2013

pH 10: 3AA433 1/31/2015

ORP: 3AK325 Exp. 5/2015

Zero Turbidity:

Turbidity Std. # 1:

Turbidity Std. #2:

Signed

L2008-213

TRC

Low-flow Groundwater Field Data Record

Project:	Project No.:	Date/Time:	Sheet 1 of 1
NBHS / 115058		1/16/14	

TRC Personnel: K.Jordan

Well ID: MW-28

WELL INTEGRITY

	YES	NO
Protect. Casing Secure	X	
Concrete Collar Intact		
PVC Stick-up Intact		
Well Cap Present		
Security Lock Present		

Sampling Equipment: See Below

Flow-thru Cell Volume: 150 mL

PID SCREENING MEAS.

Background	–
Well Mouth	0.2

Protective Casing Stick-up (from ground) — ft.

Riser Stick-up (from ground) — ft.

WELL DIAMETER: Other: 1" — 2 inch / 4 inch / 6 inch

WELL MATERIAL: [X] PVC [ ] SS [ ] ___

Well Depth ~12 ft. — [ ] top of riser [ ] top of casing [X] G.S. — [ ] measured [X] historical

Water Depth 1.70 ft. — LNAPL/DNAPL Depth = — Thickness = —

LOW FLOW DATA

Depth of pump intake: ~9'

Static water level after pump put into well: ~1.70

Initial purge Rate/ Water Level (100-400 ml/min): 60

Adjusted purge Rates/time/WL(record changes): —

Flow rate at time of sampling: 60

Volume of water purged:

FIELD WATER QUALITY MEASUREMENTS (record at appropriate intervals)

Time	1135	1150	1200	1210	1220	1230	1240	1250	1300	1305
Temp. (C)		23.60	23.40	23.38	23.05	23.28	23.29	23.16	23.16	23.19
Conduct. (µmhos/cm)	Begin	345	326	325	324	326	325	325	324	324
DO (mg/l)		1.77	1.82	1.61	1.45	0.32	0.33	0.25	0.25	0.22
pH (Std. Units)	purge	6.20	6.18	6.18	6.18	6.18	6.18	6.18	6.17	6.17
Eh/ORP (millivolts)		35.4	26.1	22.8	21.6	16.0	13.2	12.5	11.2	10.2
Turbidity (NTU)		149	59.6	35.6	20.9	13.7	10.3	6.93	7.96	7.54
Flow (ml/min)		60	60	60	60	60	60	60	60	60
Depth To Water (ft)	1.70'	1.70	1.70	1.70	1.70	1.70	1.70	1.70	1.70	1.70

Time	1310	1315	1320*	1335	1410	1445	1450
Temp. (C)	23.34	23.40	23.46	22.81	23.13	23.37	
Conduct. (µmhos/cm)	324	324	324	327	323	323	
DO (mg/l)	0.25	0.24	0.25	0.26	0.23	0.26	sample
pH (Std. Units)	6.17	6.17	6.17	6.16	6.15	6.15	
Eh/ORP (millivolts)	9.7	9.2	8.8	8.5	6.7	9.2	
Turbidity (NTU)	6.40	5.72	6.48	5.61	3.61	3.82	
Flow (ml/min)	60	60	60	60	60	60	
Depth To Water (ft)	1.70	1.70	1.70	1.70	1.70	1.70	

Stabilization Criteria* (3 consecutive readings)
- Temperature: +/- 3 %
- Conduct. (µmhos/cm): +/- 3 %
- DO (mg/l): +/- 10 % (for values >0.5 mg/L)
- pH (Std. Units): +/- 0.1 SU
- Eh/ORP (millivolts): +/- 10 mV
- Turbidity (NTU): +/- 10 % (for values >5.0 NTUs)
- Drawdown: < 0.3 ft (can be greater as long as water level stabilizes above well screen)

*Called Al Leonard to discuss. He says to purge up to another hour and reevaluated. Only need to check turbidity a few times (~20-30 min) @1420 Al says to purge 30 more min and sample regardless.

Pump Type	Purge	Sample
Peristaltic Pump		
Submersible Pump		
Bladder Pump	■	■
Other:		

Comments: YSI 556 MPS, MP15, QED SamplePro 0.75" bladder pump, ~~LaMotte 2020~~. Hach 2100Q

End turbidity after sampling: 4 NTU

Analytical Parameter	Filtered (Y/N)	Preservation	Volume	Time Collected	QC	Sample #
VOC	No	HCl	3x40-ml VOA	1450	DUP-1	MW-28
PCB	Yes/No	—	6x1-L Amber	1450	DUP-1	MW-28

* From USEPA Region 1 Low-Stress (Low-Flow) SOP, January 19, 2010 (EQASOP-GW-001).

Signed: Kyle Jordan

Rev: October 2012

TRC

Low-flow Groundwater Field Data Record

Project:	Project No.:	Date/Time:	Sheet 1 of 1
NBHS / 115058		1/17/14	

TRC Personnel: K.Jordan

Well ID: MW-32

WELL INTEGRITY

	YES	NO
Protect. Casing Secure	X	
Concrete Collar Intact	X	
PVC Stick-up Intact	X	
Well Cap Present	X	
Security Lock Present		X

Sampling Equipment: See Below

Flow-thru Cell Volume: 150

PID SCREENING MEAS.

Background	—
Well Mouth	

Protective Casing Stick-up (from ground) — ft.

Riser Stick-up (from ground) — ft.

WELL DIAMETER: Other: ____ 2 inch [X] 4 inch [ ] 6 inch [ ] 1 inch

WELL MATERIAL: [X] PVC [ ] SS [ ] —

Well Depth 9 ft. [ ] top of riser [ ] top of casing [X] G.S. — [ ] measured [X] historical

Water Depth 1.88 ft. LNAPL/DNAPL Depth = — Thickness = —

LOW FLOW DATA

Depth of pump intake: ~6.8'

Static water level after pump put into well: 1.85'

Initial purge Rate/ Water Level (100-400 ml/min): 60

Adjusted purge Rates/time/WL(record changes): —

Flow rate at time of sampling: 60

Volume of water purged:

FIELD WATER QUALITY MEASUREMENTS (record at appropriate intervals)

Time	0820	0825	0845	0850	0855	0900	0905	0910	0915	0920
Temp. (C)				22.32	21.60	21.84	21.93	21.98	22.10	22.04
Conduct. (µmhos/cm)	Begin		Filling	461	404	392	387	384	382	380
DO (mg/l)	purge		YSI	1.00	0.89	0.83	0.78	0.77	0.80	0.84
pH (Std. Units)				6.53	6.51	6.53	6.53	6.53	6.53	6.53
Eh/ORP (millivolts)				-25.5	-26.4	-24.3	-24.6	-24.0	-23.0	-27.1
Turbidity (NTU)		367	273	44.1	18.9	12.7	8.24	7.29	5.36	4.98
Flow (ml/min)				60	60	60	60	60	60	60
Depth To Water (ft)	1.88	1.88	1.88	1.88	1.88	1.88	1.88	1.88	1.88	1.88

Time	0925	0930					
Temp. (C)	22.05						
Conduct. (µmhos/cm)	378						
DO (mg/l)	0.85	Sample					
pH (Std. Units)	6.53						
Eh/ORP (millivolts)	-21.6						
Turbidity (NTU)	4.32						
Flow (ml/min)	60						
Depth To Water (ft)	1.88						

Stabilization Criteria* (3 consecutive readings)
- Temperature: +/- 3 %
- Conduct. (µmhos/cm): +/- 3 %
- DO (mg/l): +/- 10 % (for values >0.5 mg/L)
- pH (Std. Units): +/- 0.1 SU
- Eh/ORP (millivolts): +/- 10 mV
- Turbidity (NTU): +/- 10 % (for values >5.0 NTUs)
- Drawdown: < 0.3 ft (can be greater as long as water level stabilizes above well screen)

Pump Type	Purge	Sample
Peristaltic Pump	[ ]	[ ]
Submersible Pump	[ ]	[ ]
Bladder Pump	[X]	[X]
Other: ____	[ ]	[ ]

Comments: YSI 556 MPS, MP15, QED SamplePro 0.75" bladder pump, ~~LaMotte 2020~~. Hach 2100 Q, Durham Geo Slope water level indicator.

Analytical Parameter	Filtered (Y/N)	Preservation	Volume	Time Collected	QC	Sample #
VOC	No	HCl	3x40-ml VOA	0930	—	MW-32
~~PCB~~	~~Yes/No~~		~~6x1-L Amber~~	—	—	—
FD						

* From USEPA Region 1 Low-Stress (Low-Flow) SOP, January 19, 2010 (EQASOP-GW-001).

Signed: Kevin Jordan

Rev: October 2012

TRC

Low-flow Groundwater Field Data Record

Project:	Project No.:	Date/Time:	Sheet 1 of 1
NBHS / 115058		1/17/14	

TRC Personnel: K.Jordan

Well ID: MW-41

WELL INTEGRITY

	YES	NO
Protect. Casing Secure	X	
Concrete Collar Intact	X	
PVC Stick-up Intact	X	
Well Cap Present	X	
Security Lock Present		X

Sampling Equipment: See Below

Flow-thru Cell Volume: 150

PID SCREENING MEAS.

Background	—
Well Mouth	0.0

Protective Casing Stick-up (from ground) — ft.

Riser Stick-up (from ground) — ft.

WELL DIAMETER ☐ 2 inch ☐ 4 inch ☐ 6 inch ☒ 1 inch

Other: _____

WELL MATERIAL ☒ PVC ☐ SS ☐ —

Well Depth 11.25 ft. ☑ top of riser ☐ top of casing ☒ G.S. ☐ measured ☒ historical

Water Depth 2.00 ft.

LNAPL/DNAPL Depth = —

Thickness = —

LOW FLOW DATA

Depth of pump intake: ~9'

Static water level after pump put into well: 200

Initial purge Rate/ Water Level (100-400 ml/min):

Adjusted purge Rates/time/WL(record changes)

Flow rate at time of sampling:

Volume of water purged:

FIELD WATER QUALITY MEASUREMENTS (record at appropriate intervals)

Time	1000	1010	1020	1030	1040	1050	1100	1110	1120	1130
Temp. (C)		23.70	23.60	23.65	23.59	23.53	23.30	23.24	23.12	23.13
Conduct. (µmhos/cm)	Begin	358	358	356	355	352	352	351	350	350
DO (mg/l)	purge	2.87	2.34	0.45	0.33	0.45	0.26	0.22	0.22	0.19
pH (Std. Units)		6.35	6.32	6.31	6.30	6.29	6.29	6.28	6.27	6.27
Eh/ORP (millivolts)		-33.2	-29.2	-32.5	-40.7	-29.7	-30.2	-28.9	-27.2	-25.9
Turbidity (NTU)		414	373	257	139	60.6	36.9	24.6	22.1	22.5
Flow (ml/min)		70	70	70	70	70	70	70	70	70
Depth To Water (ft)	2.00	2.20	2.22	2.22	2.22	2.22	2.22	2.22	2.22	2.22

Time	1140	1150	1200				
Temp. (C)	23.24	23.10					
Conduct. (µmhos/cm)	349	349					
DO (mg/l)	0.16	0.16					
pH (Std. Units)	6.27	6.26					
Eh/ORP (millivolts)	-25.0	-23.8					
Turbidity (NTU)	21.6	24.4					
Flow (ml/min)	70	70					
Depth To Water (ft)	2.22	2.22					

Stabilization Criteria* (3 consecutive readings)

- Temperature: +/- 3 %
- Conduct. (µmhos/cm): +/- 3 %
- DO (mg/l): +/- 10 % (for values >0.5 mg/L)
- pH (Std. Units): +/- 0.1 SU
- Eh/ORP (millivolts): +/- 10 mV
- Turbidity (NTU): +/- 10 % (for values >5.0 NTUs)
- Drawdown: < 0.3 ft (can be greater as long as water level stabilizes above well screen)

Pump Type	Purge	Sample
Peristaltic Pump	☐	☐
Submersible Pump	☐	☐
Bladder Pump	■	■
Other: _____	☐	☐

Comments: YSI 556 MPS, MP15, QED SamplePro 1.75" bladder pump, ~~LaMotte 2020~~, Hach 2100 Q

Analytical Parameter	Filtered (Y/N)	Preservation	Volume	Time Collected	QC	Sample #
VOC	No	HCl	3x40-ml VOA	1200	—	MW-41
PCB	Yes/No	—	6x1-L Amber	1200	—	MW-41

* From USEPA Region 1 Low-Stress (Low-Flow) SOP, January 19, 2010 (EQASOP-GW-001).

Signed: Kevin Jordan

Rev: October 2012

Low-flow Groundwater Field Data Record

Project:	Project No.:	Date/Time:	Sheet 1 of ___
NBHS / 115058		1/17/14	

TRC Personnel: K.Jordan

Well ID: MW-40

WELL INTEGRITY

	YES	NO
Protect. Casing Secure	X	
Concrete Collar Intact	X	
PVC Stick-up Intact	X	
Well Cap Present	X	
Security Lock Present		X

Sampling Equipment: See Below

Flow-thru Cell Volume: 150

PID SCREENING MEAS.

Background	—
Well Mouth	

Protective Casing Stick-up (from ground) — ft.

Riser Stick-up (from ground) — ft.

WELL DIAMETER Other: ____ 2 inch; 4 inch; 6 inch; X 1-inch

WELL MATERIAL X PVC; SS; ___

Well Depth 12' ft. ☐ top of riser ☐ top of casing X GS; measured / X historical

Water Depth 1.70 ft. LNAPL/DNAPL Depth = — Thickness = —

LOW FLOW DATA

Depth of pump intake: ~9.5'

Static water level after pump put into well

Initial purge Rate/ Water Level (100-400 ml/min):

Adjusted purge Rates/time/WL(record changes)

Flow rate at time of sampling:

Volume of water purged:

FIELD WATER QUALITY MEASUREMENTS (record at appropriate intervals)

Time	1405	1415	1420*	1430*	1440	1450	1500Δ	1510	1520	1530
Temp. (C)	Begin purge	22.25	22.32	|	|	|	|	22.28	22.27	22.17
Conduct. (µmhos/cm)		292	290	|	|	|	|	290	289	290
DO (mg/l)		1.18	0.58	|	|	|	|	2.25	2.28	0.20
pH (Std. Units)		5.99	5.97	|	|	|	|	5.97	5.95	5.95
Eh/ORP (millivolts)		78.7	77.1	|	|	|	|	83.8	76.5	79.8
Turbidity (NTU)		731	OR	513	444	252	231	190	139	100
Flow (ml/min)	60	60	60	60	60	60	60	60	60	60
Depth To Water (ft)	1.70	1.78	1.78	1.78	1.78	1.78	1.78	1.78	1.78	1.78

Time	1540	1550	1600	1610	1620		
Temp. (C)	22.22	22.26	22.28	22.34	|		
Conduct. (µmhos/cm)	289	289	289	289	|		
DO (mg/l)	0.23	0.23	0.23	0.25	Sample		
pH (Std. Units)	5.94	5.94	5.94	5.94			
Eh/ORP (millivolts)	75.0	73.0	71.7	70.9			
Turbidity (NTU)	82	59.7	53.8	38.3	|		
Flow (ml/min)	60	60	60	60	|		
Depth To Water (ft)	1.78	1.78	1.78	1.78	|		

Stabilization Criteria* (3 consecutive readings)
- Temperature: +/- 3 %
- Conduct. (µmhos/cm): +/- 3 %
- DO (mg/l): +/- 10 % (for values >0.5 mg/L)
- pH (Std. Units): +/- 0.1 SU
- Eh/ORP (millivolts): +/- 10 mV
- Turbidity (NTU): +/- 10 % (for values >5.0 NTUs)
- Drawdown: < 0.3 ft (can be greater as long as water level stabilizes above well screen)

*Disconnected YSI until turbidity decreases.

Δ Reconnect YSI.

- Sampled at 1620 per A. Leonard

Pump Type	Purge	Sample
Peristaltic Pump	☐	☐
Submersible Pump	☐	☐
Bladder Pump	■	■
Other: ____	☐	☐

Comments: YSI 556 MPS, MP15, QED SamplePro 0.75" bladder pump, ~~LaMotte 2020~~. Hach 2100 Q

Analytical Parameter	Filtered (Y/N)	Preservation	Volume	Time Collected	QC	Sample #
VOC	No	HCl	3x40-ml VOA	1620	—	MW-40
PCB	Yes/No	—	6x1-L Amber	1620	—	MW-40

* From USEPA Region 1 Low-Stress (Low-Flow) SOP, January 19, 2010 (EQASOP-GW-001).

Signed: Kyrian Jordan

Rev: October 2012

INSTRUMENT CALIBRATION REPORT

Pine Environmental Services, LLC.

24 Tower Office Park
Woburn, MA 01801
Toll-free: (800) 519-PINE (7463)

Pine Environmental Services, Inc.

Instrument ID 5662
Description YSI 556
Calibrated 2/6/2014 1:44:15PM

Manufacturer YSI
Model Number 556
Serial Number/ Lot Number 04J15531AJ
Location Massachusetts
Department

State Certified
Status Pass
Temp °C 21.3
Humidity % 7

Calibration Specifications

Group # 1
Group Name PH
Stated Accy Pct of Reading
Range Acc % 0.0000
Reading Acc % 3.0000
Plus/Minus 0.00

Nom In Val / In Val	In Type	Out Val	Out Type	Fnd As	Lft As	Dev%	Pass/Fail
7.00 / 7.00	PH	7.00	PH	7.00	7.00	0.00%	Pass
4.00 / 4.00	PH	4.00	PH	4.00	4.00	0.00%	Pass
10.00 / 10.00	PH	10.00	PH	10.03	10.03	0.30%	Pass

Group # 2
Group Name Conductivity
Stated Accy Pct of Reading
Range Acc % 0.0000
Reading Acc % 3.0000
Plus/Minus 0.000

Nom In Val / In Val	In Type	Out Val	Out Type	Fnd As	Lft As	Dev%	Pass/Fail
1.413 / 1.413	ms/cm	1.413	ms/cm	1.413	1.413	0.00%	Pass

Group # 3
Group Name Redox (ORP)
Stated Accy Pct of Reading
Range Acc % 0.0000
Reading Acc % 3.0000
Plus/Minus 0.00

Nom In Val / In Val	In Type	Out Val	Out Type	Fnd As	Lft As	Dev%	Pass/Fail
240.00 / 240.00	mv	240.00	mv	240.00	240.00	0.00%	Pass

Group # 4
Group Name Disolved Oxygen Span
Stated Accy Pct of Reading
Range Acc % 0.0000
Reading Acc % 3.0000
Plus/Minus 0.00

Nom In Val / In Val	In Type	Out Val	Out Type	Fnd As	Lft As	Dev%	Pass/Fail
100.00 / 100.00	%	100.00	%	100.30	100.30	0.30%	Pass

INSTRUMENT CALIBRATION REPORT

Pine Environmental Services, LLC.

24 Tower Office Park
Woburn, MA 01801
Toll-free: (800) 519-PINE (7463)

Pine Environmental Services, Inc.

Instrument ID 5662
Description YSI 556
Calibrated 2/6/2014 1:44:15PM

Test Instruments Used During the Calibration (As Of Cal Entry Date)

Test Standard ID	Description	Manufacturer	Model Number	Serial Number / Lot Number	Last Cal Date/ Opened Date	Next Cal Date / Expiration Date
MA 0 D.O. SOLUTION	MA 0 D.O. Solution	EMD		201023821	9/23/2012	9/23/2020
MA 1413 COND.	MA 1.413 MS/CM	Pine Environmental Services, Inc.		2AC129		3/1/2014
MA ORP 240MV 5245	MA ORP SOLUTION 240 mV	Hanna	240 mV	5245		11/1/2017
MA PH10 3AC002	MA PH10 SOLUTION	AquaPhoenix Scientific	PH10	3AC002		3/1/2015
MA PH4 3AB480	MA PH4 SOLUTION	AquaPhoenix Scientific	MA PH4	3AB480		3/1/2015
MA PH7 3AB462	Ma pH 7.00	AquaPhoenix Scientific		3AB462		3/1/2015

Notes about this calibration

ZERO D.O. AT 0.10

Calibration Result Calibration Successful
Who Calibrated Orlando Gomez

All instruments are calibrated by Pine Environmental Services, LLC. according to the manufacturer's specifications, but it is the customer's responsibility to calibrate and maintain this unit in accordance with the manufacturer's specifications and/or the customer's own specific needs.

Notify Pine Environmental Services, LLC. of any defect within 24 hours of receipt of equipment
Please call 866-960-7463 for Technical Assistance

TRC

Low-flow Groundwater Field Data Record

Project:	Project No.:	Date/Time:	Sheet 1 of 1
NBHS / 115058		2/14/14	

TRC Personnel: K.Jordan

Well ID: MW-27R

WELL INTEGRITY

	YES	NO
Protect. Casing Secure	✓	
Concrete Collar Intact	✓	
PVC Stick-up Intact	✓	
Well Cap Present	✓	
Security Lock Present		✓

Sampling Equipment:

Flow-thru Cell Volume: 475

PID SCREENING MEAS.

Background	
Well Mouth	

Protective Casing Stick-up (from ground) ✓ ft.

Riser Stick-up (from ground) ✓ ft.

WELL DIAMETER: ☐ 2 inch ☒ 4 inch ☐ 6 inch

Other: _____

WELL MATERIAL: ☐ PVC ☐ SS ☐ ___

Well Depth 12' ft. ☐ top of riser ☐ top of casing ☐ measured ☐ historical

Water Depth 2.00 ft.

LNAPL/DNAPL Depth = ✓

Thickness = ✓

LOW FLOW DATA

Depth of pump intake: ~6'

Static water level after pump put into well 2.00'

Initial purge Rate/ Water Level (100-400 ml/min): 200 mL/min

Adjusted purge Rates/time/WL(record changes)

Flow rate at time of sampling: 200

Volume of water purged:

FIELD WATER QUALITY MEASUREMENTS (record at appropriate intervals)

Time	0920	0930	0935	0940	0945	0950	0955			
Temp. (C)		18.64	19.79	20.40	20.55	20.59	|			
Conduct. (µmhos/cm)	|	374	372	369	368	376	|			
DO (mg/l)	Begin	3.80	1.71	1.56	1.47	1.35	|			
pH (Std. Units)	Purge	7.05	6.46	6.41	6.39	6.38	to			
Eh/ORP (millivolts)		-42	-30	-25	-21	-18	Samp			
Turbidity (NTU)	|	11.1	13.8	12.0	12.4	11.6	|			
Flow (ml/min)	|	200	200	200	200	200	|			
Depth To Water (ft)	2.00	2.20'	2.30	2.30	2.30	2.28	|			

Time							
Temp. (C)							
Conduct. (µmhos/cm)							
DO (mg/l)							
pH (Std. Units)							
Eh/ORP (millivolts)							
Turbidity (NTU)							
Flow (ml/min)							
Depth To Water (ft)							

Stabilization Criteria* (3 consecutive readings)

- Temperature: +/- 3 %
- Conduct. (µmhos/cm): +/- 3 %
- DO (mg/l): +/- 10 % (for values >0.5 mg/L)
- pH (Std. Units): +/- 0.1 SU
- Eh/ORP (millivolts): +/- 10 mV
- Turbidity (NTU): +/- 10 % (for values >5.0 NTUs)
- Drawdown: < 0.3 ft (can be greater as long as water level stabilizes above well screen)

Pump Type	Purge	Sample
Peristaltic Pump	☐	☐
Submersible Pump	☐	☐
Bladder Pump	■	■
Other: _____	☐	☐

Comments: YSI 556 MPS, ~~MP15, QED SamplePro 1.75" bladder~~ GeoPump pump, LaMotte2020, Solinst ~~100 I.P.~~ Water level meter
– Sampled after 30 min purge per Matt Oliveira

Analytical Parameter	Filtered (Y/N)	Preservation	Volume	Time Collected	QC	Sample #
VOC	No	HCl	3x40-ml VOA	0955	—	MW-27R
PCBs	Yes/No	—	6 x 1-L Amb	0955	—	MW-27R

* From USEPA Region 1 Low-Stress (Low-Flow) SOP, January 19, 2010 (EQASOP-GW-001).

Signed: KJ

Rev: October 2012

TRC

Low-flow Groundwater Field Data Record

Project:	Project No.:	Date/Time:	Sheet 1 of 1
NBHS / 115058		2/14/14	

TRC Personnel: K.Jordan

Well ID: mw-42R

WELL INTEGRITY

	YES	NO
Protect. Casing Secure	✓	
Concrete Collar Intact	X	
PVC Stick-up Intact	X	
Well Cap Present	X	
Security Lock Present		X

Sampling Equipment:

Flow-thru Cell Volume: 475

PID SCREENING MEAS.

Background	
Well Mouth	

Protective Casing Stick-up (from ground) — ft.

Riser Stick-up (from ground) — ft.

WELL DIAMETER: Other: ____ ☐ 2 inch ☒ 4 inch ☐ 6 inch

WELL MATERIAL: ☒ PVC ☐ SS ☐ ___

Well Depth ~10 ft. ☐ top of riser ☒ top of casing ☐ ___ ☐ measured ☒ historical

Water Depth 2.00 ft. LNAPL/DNAPL Depth = ✓ Thickness = ✓

LOW FLOW DATA

Depth of pump intake: ~5'

Static water level after pump put into well ~5' 2.00

Initial purge Rate/ Water Level (100-400 ml/min): 200

Adjusted purge Rates/time/WL(record changes): ✓

Flow rate at time of sampling: 200

Volume of water purged:

FIELD WATER QUALITY MEASUREMENTS (record at appropriate intervals)

Time	1015	1025	1030	1035	1040	1045	1050			
Temp. (C)	Begin Purge	21.57	21.83	22.29	22.34	22.34	Sample			
Conduct. (µmhos/cm)		329	323	318	318	317				
DO (mg/l)		1.94	0.98	0.67	0.57	0.51				
pH (Std. Units)		6.15	6.12	6.06	6.03	5.97				
Eh/ORP (millivolts)		8.9	7.5	2.4	1.8	-3.2				
Turbidity (NTU)		12.9	11.2	10.93	10.80	12.0				
Flow (ml/min)		200	200	200	200	200				
Depth To Water (ft)		2.02	2.06	2.17	2.19	2.21				

Time							
Temp. (C)							
Conduct. (µmhos/cm)							
DO (mg/l)							
pH (Std. Units)							
Eh/ORP (millivolts)							
Turbidity (NTU)							
Flow (ml/min)							
Depth To Water (ft)							

Stabilization Criteria* (3 consecutive readings)
- Temperature: +/- 3 %
- Conduct. (µmhos/cm): +/- 3 %
- DO (mg/l): +/- 10 % (for values >0.5 mg/L)
- pH (Std. Units): +/- 0.1 SU
- Eh/ORP (millivolts): +/- 10 mV
- Turbidity (NTU): +/- 10 % (for values >5.0 NTUs)
- Drawdown: < 0.3 ft (can be greater as long as water level stabilizes above well screen)

Pump Type	Purge	Sample
Peristaltic Pump	☐	☐
Submersible Pump	☐	☐
Bladder Pump	■	■
Other: ____	☐	☐

Comments: YSI 556 MPS, MP15, ~~QED SamplePro 1.75" bladder pump~~, LaMotte2020, Solinst 100 I.P. Geopump
-Sampled after 30 min purge per Matt. Oliveira

Analytical Parameter	Filtered (Y/N)	Preservation	Volume	Time Collected	QC	Sample #
VOC	No	HCl	3x40-ml VOA	1050	—	MW-42R
PCBs	Yes/No	—	6 x 1-L Amb	1050	—	MW-42R

* From USEPA Region 1 Low-Stress (Low-Flow) SOP, January 19, 2010 (EQASOP-GW-001).

Signed: [signature]

Rev: October 2012

US Environmental Rental Corporation

(888) 550-8100 www.usenvironmental.com

166 Riverview Ave, Waltham, MA 02453 (781) 899-1560
91 Prestige Park Circle, Suite 5, East Hartford, CT 06108 (860) 289-8700
5C South Gold Dr, Hamilton, NJ 08691 (609) 570-8555
1202 Tech Blvd., Suite 108, Tampa, FL 33619 (813) 628-4200

YSI

Order No.: 75925
Date: 2/19/2014
Technician: TL

Company: TRC
Contact: J Fiero
Phone #: #N/A

Packing List

Item	Serial Number	Tech	QC
600 XL	99E0049 AA	✓	
Handheld Display	02F0628 AA	✓	

Item	Tech	QC	Item	Tech	QC
Cable 8 '	✓		AC Adaptor		
Flow Cell	✓		Stand	✓	
Barb Kit	✓		D.O Kit	✓	
Storage / Cal Cup	✓		Calibration Kit	✓	
Sensor Guard	✓				
Manual	✓				
Sonde Cap					
Software					
Extra Batteries	✓				
Display Comm. Cable	✓				
Sonde Comm. Cable					

Calibration Report

600 XL		99E0049 AA		
Parameter	***Accuracy***	***Before***	***After***	***Lot #***
Conductivy 1000 µs/cm	*(+/-.5%)*	1008	1000	3AI364
pH 7 Buffer	*(+/- .2)*	7.17	6.99	3AI361
pH mV for 7 Buffer	*(0 +/- 50)*		**-9.7**	
pH 4 Buffer	*(+/- .2)*	4.00	4.00	3AK001
pH mV for 4 Buffer	*(180 +/- 50)*		**163.0**	
pH 10 Buffer	*(+/- .2)*	9.94	9.99	3AI178
pH mV for 10 Buffer	*(-180 +/- 50)*		**-179.7**	
ORP mV, 237.5	*(+/- 20 mV)*	229.2	237.50	13K100371
DO 100% Sat	*(+/- 2%)*	96.5%	101.0%	
0% DO Check	*(+/- 2%)*		2.00	3AI365
Turbidity 0 NTU	*(+/- 5%)*			12M257653
Turbidity 126 NTU	*(+/- 5%)*			13E360483

This document certifies that US Environmental Rental Corporation has provided this rental equipment and all accessories in good working order. It is the renter's responsibility to: a) review all included items upon receipt, b) verify that all items are in acceptable condition and function properly, and c) contact a US Environmental associate immediately if any item is missing, damaged, and/or not functioning properly. Any delay in notifying US Environmental will be considered as the Renter taking responsibility for such missing, damaged, and/or malfunctioning item.

Missing, damaged, and/or malfunctioning equipment and accessories will result in additional fees.

TRC

Low-flow Groundwater Sampling Data Record

Project:	Project No.:	Date/Time:	Sheet 1 of 1
NBHS	115058	2/21 7:30	

TRC Personnel: JASON FIERO

Well Identification: MW-28

WELL INTEGRITY

	YES	NO
Protect. Casing Secure	✓	
Concrete Collar Intact	✓	
PVC Stick-up Intact		
Well Cap Present		
Security Lock Present		

Protective Casing Stick-up (from ground) – ft.

Riser Stick-up (from ground) – ft.

WELL DIAMETER: ☐ 2 inch ☐ 4 inch ☐ 6 inch ✓ 1"

Well Depth 16.8 ft. ✓ top of riser ☐ top of casing ☐ ____ ✓ measured ☐ historical

Water Depth 1.4 ft.

LNAPL/DNAPL Depth = ND

Thickness = N/A

LOW FLOW DATA

Depth of pump intake: ~13.5'

Static water level after pump put into well 1.39

Initial purge Rate/ Water Level (100-400 ml/min): 60 ml/min

Adjusted purge Rates/time/WL(record changes)

7:40 → 10:40 (NO CHANGE)

TOTAL PURGED ~11 LITRES

Flow rate at time of sampling: 60 ml/min

PID SCREENING MEAS.

Background	0
Well Mouth	0.0

WELL MATERIAL: ✓ PVC ☐ SS ☐ ____

FIELD WATER QUALITY MEASUREMENTS (record at appropriate intervals) BEGAN PUMPING @ 7:40 AM

Time	10:10	10:15	10:20	10:25	10:30	10:35	10:40			
Temp. (C)	23.33	23.36	23.38	23.38	23.39	23.38				
Conduct. (µmhos/cm)	362	361	360	359	357	356				
DO (mg/l)	0.39	0.37	0.36	0.35	0.36	0.35				
pH (Std. Units)	6.23	6.22	6.22	6.22	6.22	6.22				
Eh/ORP (millivolts)	11.5	14.5	20.9	23	23.5	24				
Turbidity (NTU)	4.92	3.65	3.38	3.24	3.27	3.26				
Flow (ml/min)	60 ~~ft~~	60 ~~ft~~	60 ~~ft~~	60 ~~ft~~	60 ~~ft~~	60				
Depth To Water (ft)	1.45	1.46	1.46	1.45	1.45	1.45				

SAMPLE COLLECTED

Time							
Temp. (C)							
Conduct. (µmhos/cm)							
DO (mg/l)							
pH (Std. Units)							
Eh/ORP (millivolts)							
Turbidity (NTU)							
Flow (ml/min)							
Depth To Water (ft)							

Stabilization Criteria* (3 consecutive readings)

- Temperature: +/- 3 %
- Conduct. (µmhos/cm): +/- 3 %
- DO (mg/l): +/- 10 % (for values >1.0 mg/L)
- pH (Std. Units): +/- 0.1 SU
- Eh/ORP (millivolts): +/- 10 mV
- Turbidity (NTU): +/- 10 % (for values >5.0 NTUs)
- Drawdown: < 0.3 ft (can be greater as long as water level stabilizes above well screen)

Pump Type	Purge	Sample	Description of Sampling Equipment and Flow Rate:
Peristaltic Pump	☐	☐	
Submersible Pump	☐	☐	QED MINI BLADDER PUMP / MP-10 N^2
Bladder Pump	✓	✓	YSI 600XL / LAMOTTE 2020
Other: ____	☐	☐	

Analytical Parameter	Filtered (Y/N)	Preservation	Volume	Time Collected	QC	Sample #
VOCs	N	HCl	3-40ml	10:40	--	MW-28
PCBs	0.45 (2) Y / N (2)	N/A	4-1L AMBR.	10:40	--	MW-28F/UF

* From USEPA Region 1 Low-Stress (Low-Flow) SOP, January 19, 2010 (EQASOP-GW-001).

Signed: Jason C. Fiero

Rev: October 2012

TRC

Low-flow Groundwater Sampling Data Record

Project:	Project No.:	Date/Time:	Sheet 1 of 1
NBHS	115058	2/21 8:30	

TRC Personnel: ~~MW-41~~ JASON FIERO

Well Identification: MW-41

WELL INTEGRITY

	YES	NO
Protect. Casing Secure	✓	
Concrete Collar Intact	✓	
PVC Stick-up Intact		
Well Cap Present		
Security Lock Present		

Protective Casing Stick-up (from ground) – ft.

Riser Stick-up (from ground) – ft.

WELL DIAMETER: ☐ 2 inch ☐ 4 inch ☐ 6 inch ☑ 1 in

WELL MATERIAL: ☑ PVC ☐ SS ☐

Well Depth 11.25 ft. ☑ top of riser ☐ top of casing ☐ ☑ measured ☐ historical

Water Depth 1.51 ft.

LNAPL/DNAPL Depth = N/D

Thickness = N/A

LOW FLOW DATA

Depth of pump intake: ~9'

Static water level after pump put into well 1.50

Initial purge Rate/ Water Level (100-400 ml/min): 50 ml/min

Adjusted purge Rates/time/WL(record changes) 8:40 → 14:05 (NO CHANGE)

TOTAL PURGE: 16.25 L

Flow rate at time of sampling: 50 ml/min

PID SCREENING MEAS.

Background	0
Well Mouth	0

FIELD WATER QUALITY MEASUREMENTS (record at appropriate intervals) BEGAN PUMP @ 8:40

Time	11:40	11:45	11:50	11:55	12:00	12:05	12:10	12:15	12:20	12:30
Temp. (C)	23.18	23.18	23.19	23.2	23.2	23.22	23.23	23.24	23.27	23.19
Conduct. (µmhos/cm)	375	375	376	376	376	376	376	376	375	375
DO (mg/l)	0.50	0.48	0.44	0.43	0.42	0.41	0.40	0.39	0.39	0.40
pH (Std. Units)	6.32	6.32	6.32	6.33	6.33	6.33	6.32	6.32	6.32	6.32
Eh/ORP (millivolts)	-15	-15	-15.5	-16	-16	-16	-15	-15	-15	-16
Turbidity (NTU)	12.6	12.4	12.0	11.5	11.0	10.5	10	9.37	9.24	8.5
Flow (ml/min)	50	50	50	50	50	50	50	50	50	50
Depth To Water (ft)	1.51 →									

Time	12:40	12:50	13:00	13:10	13:20	14:00	14:05
Temp. (C)	23.23	23.20	23.25	23.12	TURB. 6.0	23.18	SAMPLE COLLECTED
Conduct. (µmhos/cm)	375	375	375	375	TIME 13:30	375	
DO (mg/l)	0.44	0.40	0.42	0.39	TURB 5.5	0.37	
pH (Std. Units)	6.32	6.32	6.32	6.32	TIME 13:40	6.32	
Eh/ORP (millivolts)	-20	-22	-18	-21	TURB. 5.3	-24	
Turbidity (NTU)	7.8	7.7	7.4	7.0	TIME 13:50	4.8	
Flow (ml/min)	50	50	50	50	TURB. 4.98	50	
Depth To Water (ft)	1.51 →						1.51

Stabilization Criteria* (3 consecutive readings)
- Temperature: +/- 3 %
- Conduct. (µmhos/cm): +/- 3 %
- DO (mg/l): +/- 10 % (for values >1.0 mg/L)
- pH (Std. Units): +/- 0.1 SU
- Eh/ORP (millivolts): +/- 10 mV
- Turbidity (NTU): +/- 10 % (for values >5.0 NTUs)
- Drawdown: < 0.3 ft (can be greater as long as water level stabilizes above well screen)

Pump Type	Purge	Sample	Description of Sampling Equipment and Flow Rate:
Peristaltic Pump	☐	☐	
Submersible Pump	☐	☐	QED MINI BLADDER PUMP / MP-10 N2
Bladder Pump	✓	✓	YSI 600XL / LA MOTTE 2020
Other:	☐	☐	

Analytical Parameter	Filtered (Y/N)	Preservation	Volume	Time Collected	QC	Sample #
VOCs	N	HCl	3-40 ml VOA	14:05	–	MW-41
PCBs	N / Y (0.45)*	N/A	6-1L AMBER	14:05	–	MW-41F / 4F

* 2-1L LAB FILTER TO 0.2 µm

* From USEPA Region 1 Low-Stress (Low-Flow) SOP, January 19, 2010 (EQASOP-GW-001).

Signed: Jason C. Fiero

Rev: October 2012

TRC

Low-flow Groundwater Sampling Data Record

Project:	Project No.:	Date/Time:	Sheet 1 of 1
NBHS	115058	2/21 9:00	

TRC Personnel: JASON FIERO

Well Identification: MW-27R

WELL INTEGRITY

	YES	NO
Protect. Casing Secure	✓	
Concrete Collar Intact	✓	
PVC Stick-up Intact		
Well Cap Present		
Security Lock Present		

Protective Casing Stick-up (from ground) — ft.

Riser Stick-up (from ground) — ft.

Well Depth 9.5 ft. ✓ top of riser ☐ top of casing ☐ ____ ☐ measured ✓ historical

Water Depth PVC 1.23 / GS 1.67 ft.

LNAPL/DNAPL Depth = N/D

Thickness = N/A

LOW FLOW DATA

WELL DIAMETER ☐ 2 inch ✓ 4 inch ☐ 6 inch ☐ ____

Depth of pump intake: 8'

Static water level after pump put into well 1.65

Initial purge Rate/ Water Level (100-400 ml/min): 250 ml/min

Adjusted purge Rates/time/WL(record changes)

9:10 → 9:50 (NO CHANGES)

TOTAL PURGED ~10 LITERS.

Flow rate at time of sampling: 250 ml/min

PID SCREENING MEAS.

Background	0-0.1
Well Mouth	0-0.1

WELL MATERIAL ✓ PVC ☐ SS ☐ ____

FIELD WATER QUALITY MEASUREMENTS (record at appropriate intervals) BEGAN PUMP @ 9:10 AM

Time	9:20	9:25	9:30	9:35	9:40	9:45	9:50			
Temp. (C)	20.95	20.97	21.0	21.06	21.09	21.10	↑			
Conduct. (µmhos/cm)	350	349	348	348	349	349				
DO (mg/l)	0.34	0.33	0.34	0.37	0.38	0.39				
pH (Std. Units)	6.24	6.23	6.23	6.23	6.23	6.23				
Eh/ORP (millivolts)	-32.6	-35	-36	-32	-30	-27	SAMPLED			
Turbidity (NTU)	2.35	2.28	2.15	2.0	1.89	1.79				
Flow (ml/min)	250	250	250	250	250	250				
Depth To Water (ft)	1.65	1.64	1.63	1.62	1.61	1.61				

Time							
Temp. (C)							
Conduct. (µmhos/cm)							
DO (mg/l)							
pH (Std. Units)							
Eh/ORP (millivolts)							
Turbidity (NTU)							
Flow (ml/min)							
Depth To Water (ft)							

Stabilization Criteria* (3 consecutive readings)

- Temperature: +/- 3 %
- Conduct. (µmhos/cm): +/- 3 %
- DO (mg/l): +/- 10 % (for values >1.0 mg/L)
- pH (Std. Units): +/- 0.1 SU
- Eh/ORP (millivolts): +/- 10 mV
- Turbidity (NTU): +/- 10 % (for values >5.0 NTUs)
- Drawdown: < 0.3 ft (can be greater as long as water level stabilizes above well screen)

Pump Type	Purge	Sample
Peristaltic Pump	✓	✓
Submersible Pump		
Bladder Pump		
Other: ____		

Description of Sampling Equipment and Flow Rate:

GEOTECH PERISTALTIC PUMP.

YSI 600 XL / LAMOTTE 2020

Analytical Parameter	Filtered (Y/N)	Preservation	Volume	Time Collected	QC	Sample #
VOCs	N	HCl	3-40ml VOA	9:50	–	MW-27R
PCBs	(4) N / Y (0.45) (2)	N/A	6-1L AMB.	9:50	–	MW-27RF/UF

* LAB FILTER TO 0.2 µm

* From USEPA Region 1 Low-Stress (Low-Flow) SOP, January 19, 2010 (EQASOP-GW-001).

Signed: Jason C. Fiero

Rev: October 2012

TRC

Low-flow Groundwater Sampling Data Record

Project:	Project No.:	Date/Time:	Sheet 1 of 1
NBHS	115058	2/21 13:30	

TRC Personnel: JASON FIERO

Well Identification: MW-42R.

WELL INTEGRITY

	YES	NO
Protect. Casing Secure	✓	
Concrete Collar Intact	✓	
PVC Stick-up Intact		
Well Cap Present		
Security Lock Present		

Protective Casing Stick-up _____ ft. (from ground)

Riser Stick-up (from ground) _____ ft.

Well Depth 12 ft. ✓ top of riser ☐ top of casing ☐ measured ✓ historical

Water Depth 1.0/1.61 ft. PVC GS

LNAPL/DNAPL Depth = N/D

Thickness = N/A

LOW FLOW DATA

WELL DIAMETER ☐ 2 inch ✓ 4 inch ☐ 6 inch

Depth of pump intake: 10'

Static water level after pump put into well 1.61

Initial purge Rate/ Water Level (100-400 ml/min): 250 ml/MIN

Adjusted purge Rates/time/WL(record changes) 14:00 → 14:40 (NO CHANGE)

TOTAL PURGED ~10 LITRES

Flow rate at time of sampling: 250 ml/MIN

PID SCREENING MEAS.

Background	0
Well Mouth	0.1

WELL MATERIAL ✓ PVC ☐ SS ☐ ___

FIELD WATER QUALITY MEASUREMENTS (record at appropriate intervals) BEGAN PUMP @ 14:00

Time	14:10	14:15	14:20	14:25	14:30	14:35	14:40			
Temp. (C)	22.19	22.19	22.18	22.17	22.16	22.16	SAMPLE COLLECTED			
Conduct. (µmhos/cm)	329	329	328	327	325	324				
DO (mg/l)	0.33	0.29	0.25	0.29	0.29	0.31				
pH (Std. Units)	6.05	6.05	6.05	6.06	6.05	6.05				
Eh/ORP (millivolts)	39	38	37	35	33	32				
Turbidity (NTU)	1.45	1.1	0.87	0.6	0.55	0.49				
Flow (ml/min)	250	250	250	250	250	250				
Depth To Water (ft)	1.61	1.61	1.61	1.61	1.61	1.61				

Time							
Temp. (C)							
Conduct. (µmhos/cm)							
DO (mg/l)							
pH (Std. Units)							
Eh/ORP (millivolts)							
Turbidity (NTU)							
Flow (ml/min)							
Depth To Water (ft)							

Stabilization Criteria* (3 consecutive readings)

- Temperature: +/- 3 %
- Conduct. (µmhos/cm): +/- 3 %
- DO (mg/l): +/- 10 % (for values >1.0 mg/L)
- pH (Std. Units): +/- 0.1 SU
- Eh/ORP (millivolts): +/- 10 mV
- Turbidity (NTU): +/- 10 % (for values >5.0 NTUs)
- Drawdown: < 0.3 ft (can be greater as long as water level stabilizes above well screen)

Pump Type	Purge	Sample
Peristaltic Pump	✓	✓
Submersible Pump		
Bladder Pump		
Other: _____		

Description of Sampling Equipment and Flow Rate:

GEOTECH PERISTALTIC PUMP

YSI 600XL / LA MOTTE 2020

Analytical Parameter	Filtered (Y/N)	Preservation	Volume	Time Collected	QC	Sample #
VOCs	N	HCl	6-40ml VOA	14:40	DUP.	MW-42R
PCBs	(3) N*/Y (4)	—	12-1L AMB	14:40	DUP.	MW-42R F/UF

* LAB FILTER TO 0.2mm

* From USEPA Region 1 Low-Stress (Low-Flow) SOP, January 19, 2010 (EQASOP-GW-001).

Signed: Jason C. Fiero

Rev: October 2012

650 Suffolk Street
Lowell, MA
Telephone: 978-970-5600
Fax: 978-453-1995

BORING/WELL CONSTRUCTION LOG

CLIENT/PROJECT NUMBER 115058/ City of New Bedford
BORING/WELL NUMBER BF-1
TRC GEOLOGIST Jason Fiero
DRILLING CONTRACTOR/FOREMAN New England Geotech/Hayes
DATE DRILLED 02/18/2014
LOCATION NBHS Food pantry. Adjacent to MW-33.
SAMPLING METHOD 48" Macrocore
DRILLING METHOD Direct Push. (AMS 9100 VTR Geoprobe)
NOTES Sampled for PCBs at 2-4', 4-6', and 6-8'.

SCREEN TYPE/SLOT NA
FILTER PACK TYPE NA
SEAL TYPE NA
DEPTH TO WATER (Approximate Feet) 4
TOTAL DEPTH (Feet) 8
GROUND ELEVATION (Feet)
REFERENCE ELEVATION (Feet)

DEPTH (ft. BGL)	BLOW COUNTS	PEN/REC (INCHES)	CORE #	GRAPHIC LOG	LITHOLOGIC DESCRIPTION	Field Testing (ppm)	SAMPLE ID/ TIME	WELL DIAGRAM
					0-4" Cored CONCRETE.			
1	NA				4-24" Medium to coarse SAND, some 1/4-1.5" rounded to sub-rounded gravel. Hand cleared.			
2		36/36	S-1		0-30" Brown fine to coarse SAND, little to some sub-rounded to subangular 1/4-1" gravel. Moist to wet.	HS: 0.0		
3							BF-1 (2-4') 1210	
4								No monitoring well installed.
					30-36" Grey brown fine to coarse SAND, little silt, little sub-rounded 1/2-1" gravel, trace organics. Saturated. Slight odor and staining.	HS: 2.0		
5		38/38	S-2				BF-1 (4-6') 1220	
					0-8" Grey brown fine to coarse SAND, little silt, little sub-rounded 1/2-1" gravel, trace organics. Saturated. Slight odor and staining.	HS: 2.0		
6					8-34" Grey fine SAND. Slight odor. [NATIVE]			
7							BF-1 (6-8') 1230	
8					34-38" Light grey fine silty SAND. [NATIVE]	HS: 0.0		
					End of Boring @ 8 feet.			
					Hole collapsed. Could not go deeper.			

650 Suffolk Street
Lowell, MA
Telephone: 978-970-5600
Fax: 978-453-1995

BORING/WELL CONSTRUCTION LOG

CLIENT/PROJECT NUMBER 115058/ City of New Bedford
BORING/WELL NUMBER BF-2
TRC GEOLOGIST Jason Fiero
DRILLING CONTRACTOR/FOREMAN New England Geotech/Hayes
DATE DRILLED 02/18/2014
LOCATION NBHS Mechanical room. 14' West of MW-42R.
SAMPLING METHOD 48" Macrocore
DRILLING METHOD Direct Push. (AMS 9100 VTR Geoprobe)
NOTES Sampled for PCBs at 2-4', 4-6', 6-8', 8-10', and 10-12'.

SCREEN TYPE/SLOT NA
FILTER PACK TYPE NA
SEAL TYPE NA
DEPTH TO WATER (Approximate Feet) 4
TOTAL DEPTH (Feet) 12
GROUND ELEVATION (Feet)
REFERENCE ELEVATION (Feet)

DEPTH (ft. BGL)	BLOW COUNTS	PEN/REC (INCHES)	CORE #	GRAPHIC LOG	LITHOLOGIC DESCRIPTION	Field Testing (ppm)	SAMPLE ID/ TIME	WELL DIAGRAM
					0-6" Cored CONCRETE.			
1	NA				6-24" Brown medium to coarse SAND and GRAVEL. Hand cleared.			
2		24/12	S-1		0-12" Brown medium to coarse SAND, some fine sand, little sub-rounded 1/4-1/2" gravel. Wet to saturated.	HS: 0.0		
3							BF-2 (2-4') 1340	
4		48/48	S-2		0-18" Brown medium to coarse SAND, some fine SAND, little sub-rounded 1/4-1/2" gravel. Wet to saturated.	HS: 0.0		▽
5							BF-2 (4-6') 1350	
6					18-24" Light brown fine to coarse SAND, some 1/4-1.5" sub-rounded to subangular gravel, cobbles, and rock fragments.			No monitoring well installed.
7					24-45" Grey to dark grey fine SAND. Slight odor and staining. [NATIVE]	HS: 30	BF-2 (6-8') DUP-1 1400	
8		48/48	S-3		45-48" Grey to dark grey SILT, dense. [NATIVE]			
					0-8" BLOWDOWN.	HS: 2.5		
9					8-20" Grey fine SAND. Saturated. Odor, staining and slight sheen. [NATIVE]	HS: 3.0	BF-2 (8-10') 1410	
10					20-32" Brown fine running SAND. Saturated. [NATIVE]			
11					32-48" Brown to light grey fine to medium SAND, little 1/4" sub-rounded gravel. [NATIVE]	HS: 0.0	BF-2 (10-12') 1420	
12					End of Boring @ 12 feet.			

650 Suffolk Street
Lowell, MA
Telephone: 978-970-5600
Fax: 978-453-1995

BORING/WELL CONSTRUCTION LOG

CLIENT/PROJECT NUMBER 115058/ City of New Bedford
BORING/WELL NUMBER BF-3
TRC GEOLOGIST J. Fiero & Rishabh Iyer
DRILLING CONTRACTOR/FOREMAN New England Geotech/Hayes
DATE DRILLED 02/19/2014
LOCATION NBHS Mechanical room. 12' WSW of MW-27R
SAMPLING METHOD 48" Macrocore
DRILLING METHOD Direct Push. (AMS 9100 VTR Geoprobe)
NOTES Sampled for PCBs at 2-4', 4-6', 6-8', 8-10', and 10-12'.

SCREEN TYPE/SLOT NA
FILTER PACK TYPE NA
SEAL TYPE NA
DEPTH TO WATER (Approximate Feet) 4
TOTAL DEPTH (Feet) 12
GROUND ELEVATION (Feet)
REFERENCE ELEVATION (Feet)

DEPTH (ft. BGL)	BLOW COUNTS	PEN/REC (INCHES)	CORE #	GRAPHIC LOG	LITHOLOGIC DESCRIPTION	Field Testing (ppm)	SAMPLE ID/ TIME	WELL DIAGRAM
					0-6" Cored CONCRETE.			
1	NA				6-24" Trap ROCK. Hand cleared.			
2		24/22	S-1		0-2" Brown fine to coarse SAND with trap rock.	HS: 0.0		
3					2-22" Tan to dark brown fine to coarse SAND, little to some 1/4-3/4" subangular to angular gravel, trace silt. Moist to wet.		BF-3 (2-4') 0930	
4		48/48	S-2		0-20" Tan to dark brown fine to coarse SAND, little to some 1/4-3/4" subangular to angular gravel, trace silt. Wet to saturated.	HS: 0.0		▽
5							BF-3 (4-6') 0940	
6					20-48" Grey fine SAND, trace to some silt. Saturated. Transition to [NATIVE] @ 5.5-6'	HS: 0.0		No monitoring well installed.
7							BF-3 (6-8') 0950	
8		48/39	S-3		0-39" Grey fine SAND, trace to some silt. Saturated. [NATIVE]	HS: 0.0		
9							BF-3 (8-10') 1010	
10						HS: 0.0		
11							BF-3 (10-12') 1020	
12					End of Boring @ 12 feet.			

650 Suffolk Street
Lowell, MA
Telephone: 978-970-5600
Fax: 978-453-1995

BORING/WELL CONSTRUCTION LOG

CLIENT/PROJECT NUMBER 115058/ City of New Bedford
BORING/WELL NUMBER BF-4
TRC GEOLOGIST J. Fiero & Rishabh Iyer
DRILLING CONTRACTOR/FOREMAN New England Geotech/Hayes
DATE DRILLED 02/19/2014
LOCATION NBHS Mechanical room. 9.5' SW of MW-41.
SAMPLING METHOD 48" Macrocore
DRILLING METHOD Direct Push. (AMS 9100 VTR Geoprobe)

SCREEN TYPE/SLOT NA
FILTER PACK TYPE NA
SEAL TYPE NA
DEPTH TO WATER (Approximate Feet) 4
TOTAL DEPTH (Feet) 12
GROUND ELEVATION (Feet)
REFERENCE ELEVATION (Feet)

NOTES Sampled for PCBs at 2-4', 4-6', 6-8', 8-10', and 10-12'. MS/MSD for PCBs at 4-6'.

DEPTH (ft. BGL)	BLOW COUNTS	PEN/REC (INCHES)	CORE #	GRAPHIC LOG	LITHOLOGIC DESCRIPTION	Field Testing (ppm)	SAMPLE ID/ TIME	WELL DIAGRAM
					0-6" Cored CONCRETE.			
1	NA				6-24" Brown SILTY SAND and GRAVEL. Hand cleared.			
2		24/24	S-1		0-6" Tan to brown fine to medium SILTY SAND, some coarse sand, 1/4-1.5" angular gravel. Dry to moist.	HS: 0.0		
3					6-24" Brown to grey brown fine to coarse SAND, some subangular to angular 1/8-1" gravel. Moist to wet.		BF-4 (2-4') 1115	
4		48/48	S-2		0-13" Brown to grey brown fine to coarse SAND, some subangular to angular 1/8-1" gravel. Wet to saturated.	HS: 1.5		▽
5					13-15" Dark brown to black SILT. [NATIVE]		BF-4 (4-6) 1130	
6					15-48" Gray fine SAND, little to some silt. Saturated. [NATIVE]	HS: 0.0		No monitoring well installed.
7							BF-4 (6-8') 1135	
8		48/48	S-3		0-6" Fine grey running SAND. [NATIVE]	HS: 0.0		
9					6-18" Fine grey SAND, little medium sand. Slight odor. [NATIVE]		BF-4 (8-10') 1145	
10					18-28" Fine grey running SAND. [NATIVE].	HS: 0.0		
11					28-48" Grey fine to coarse SAND, little to some silt, 1/4-1.5" angular gravel. Saturated. [NATIVE]		BF-4 (10-12') 1150	
12					End of Boring @ 12 feet.	HS: 0.0		

650 Suffolk Street
Lowell, MA
Telephone: 978-970-5600
Fax: 978-453-1995

BORING/WELL CONSTRUCTION LOG

CLIENT/PROJECT NUMBER 115058/ City of New Bedford
BORING/WELL NUMBER BF-5
TRC GEOLOGIST J. Fiero & Rishabh Iyer
DRILLING CONTRACTOR/FOREMAN New England Geotech/Hayes
DATE DRILLED 02/19/2014
LOCATION NBHS Mechanical room. 6.5' NNW of MW-40.
SAMPLING METHOD 48" Macrocore
DRILLING METHOD Direct Push. (AMS 9100 VTR Geoprobe)
NOTES Sampled for PCBs at 2-4', 4-6', 6-8', 8-10', and 10-12'.

SCREEN TYPE/SLOT NA
FILTER PACK TYPE NA
SEAL TYPE NA
DEPTH TO WATER (Approximate Feet) 4
TOTAL DEPTH (Feet) 12
GROUND ELEVATION (Feet)
REFERENCE ELEVATION (Feet)

DEPTH (ft. BGL)	BLOW COUNTS	PEN/REC (INCHES)	CORE #	GRAPHIC LOG	LITHOLOGIC DESCRIPTION	Field Testing (ppm)	SAMPLE ID/ TIME	WELL DIAGRAM
					0-8" Cored CONCRETE.			
1	NA				8-24" Brown fine to coarse SAND and GRAVEL. Hand cleared.			
2		24/10	S-1		0-10" Brown fine to coarse SAND and 1/8-1.25" sub-rounded GRAVEL. Wet to saturated.	HS: 0.0		
3							BF-5 (2-4') 1215	
4		48/28	S-2		0-20" Brown fine to coarse SAND and 1/8-1.25" sub-rounded GRAVEL. Wet to saturated.	HS: 0.0		▽
5							BF-5 (4-6') 1220	
6						HS: 1.1		No monitoring well installed.
7					20-28" Dark grey SILT. [NATIVE]		BF-5 (6-8') 1230	
8		48/36	S-3		0-28" Dark grey to brown SILT, little to some fine sand. Saturated. [NATIVE]			
9						HS: 0.2	BF-5 (8-10') 1245	
10								
11					28-36" Brown fine to coarse SAND, some 1/2-1.5" angular to subangular gravel. Saturated. [NATIVE]		BF-5 (10-12') 1250	
12					End of Boring @ 12 feet.	HS: 0.0		

650 Suffolk Street
Lowell, MA
Telephone: 978-970-5600
Fax: 978-453-1995

BORING/WELL CONSTRUCTION LOG

CLIENT/PROJECT NUMBER 115058/ City of New Bedford
BORING/WELL NUMBER BF-6
TRC GEOLOGIST J. Fiero & Rishabh Iyer
DRILLING CONTRACTOR/FOREMAN New England Geotech/Hayes
DATE DRILLED 02/19/2014
LOCATION NBHS Mechanical room. 3.5' NE of MW-27D.
SAMPLING METHOD 48" Macrocore
DRILLING METHOD Direct Push. (AMS 9100 VTR Geoprobe)
NOTES Sampled for PCBs at 2-4', 4-6', 6-8', 8-10', and 10-12'.

SCREEN TYPE/SLOT NA
FILTER PACK TYPE NA
SEAL TYPE NA
DEPTH TO WATER (Approximate Feet) 3.75
TOTAL DEPTH (Feet) 12
GROUND ELEVATION (Feet)
REFERENCE ELEVATION (Feet)

DEPTH (ft. BGL)	BLOW COUNTS	PEN/REC (INCHES)	CORE #	GRAPHIC LOG	LITHOLOGIC DESCRIPTION	Field Testing (ppm)	SAMPLE ID/ TIME	WELL DIAGRAM
					0-6" Cored CONCRETE.			
1	NA				6-24" SAND and GRAVEL. Hand cleared.			
2		24/12	S-1		0-12" Brown medium to coarse SAND, trace fine sand. Dry to moist.	HS: 0.0		
3							BF-6 (2-4') 1310	
4		48/48	S-2		0-24" Brown coarse SAND, trace fine sand. Wet to saturated. Slight odor.	HS: 0.0		
5							BF-6 (4-6') 1320	
6					24-43" Grey fine SAND, little to some silt. Slight organic reducing odor. Transition to [NATIVE] @ 6'	HS: 0.0		No monitoring well installed.
7							BF-6 (6-8') 1330	
					43-48" Dark grey SILT, trace to little fine sand. [NATIVE]			
8		48/42	S-3		0-36" Grey fine SAND and SILT. [NATIVE]	HS: 0.0		
9							BF-6 (8-10') DUP-2 1340	
10						HS: 0.0		
11							BF-6 (10-12') 1345	
					36-42" Grey fine to coarse SAND, some 1/4-1.5" angular to subangular gravel. Saturated. [NATIVE]			
12					End of Boring @ 12 feet.			

650 Suffolk Street
Lowell, MA
Telephone: 978-970-5600
Fax: 978-453-1995

BORING/WELL CONSTRUCTION LOG

CLIENT/PROJECT NUMBER 115058/ City of New Bedford
BORING/WELL NUMBER BF-7
TRC GEOLOGIST J. Fiero & Rishabh Iyer
DRILLING CONTRACTOR/FOREMAN New England Geotech/Hayes
DATE DRILLED 02/19/2014
LOCATION NBHS Food pantry. 13' West of MW-33.
SAMPLING METHOD 48" Macrocore
DRILLING METHOD Direct Push. (AMS 9100 VTR Geoprobe)
NOTES Sampled for PCBs at 2-4', 4-6', 6-8', 8-10', and 10-12'.

SCREEN TYPE/SLOT NA
FILTER PACK TYPE NA
SEAL TYPE NA
DEPTH TO WATER (Approximate Feet) 4
TOTAL DEPTH (Feet) 12
GROUND ELEVATION (Feet)
REFERENCE ELEVATION (Feet)

DEPTH (ft. BGL)	BLOW COUNTS	PEN/REC (INCHES)	CORE #	GRAPHIC LOG	LITHOLOGIC DESCRIPTION	Field Testing (ppm)	SAMPLE ID/ TIME	WELL DIAGRAM
					0-6" Cored CONCRETE.			
1	NA				6-24" Fine to coarse SAND, some gravel. Hand cleared.			
2		24/18	S-1		0-15" Brown fine to coarse SAND, little to some 1/4-1.5" subangular to angular gravel. Moist.	HS: 0.0		
3							BF-7 (2-4') 1405	
					15-18" Grey to pink crushed STONE/ROCK.			
4		48/48	S-2		0-24" Brown fine to coarse SAND, little to some 1/4-1.5" subangular to sub-rounded gravel. Wet to saturated.	HS: 0.0		
5							BF-7 (4-6') 1415	
6					24-26" Black fragmentary ROCK.	HS: 0.0		No monitoring well installed.
					26-48" Grey fine SILTY SAND. Saturated. [NATIVE]			
7							BF-7 (6-8') 1420	
8		48/48	S-3		0-36" Grey fine SAND and SILT. Saturated. [NATIVE]	HS: 0.0		
9							BF-7 (8-10') 1440	
10						HS: 0.0		
11					36-48" Grey brown fine to coarse SAND, some silt, 1/8-1" subangular to angular gravel. Saturated. [NATIVE]		BF-7 (10-12') 1450	
12					End of Boring @ 12 feet.			

APPENDIX D

COPIES OF UNIFORM HAZARDOUS WASTE MANIFESTS

CleanHarbors
ENVIRONMENTAL SERVICES®

Land Disposal Restriction Notification Form

Printed Date :Apr 11, 2014

MANIFEST INFORMATION

Generator : New Bedford Environmnetal Stewardship

Address: 230 Hathaway Boulevard
New Bedford,MA 02740

EPA ID #: M V 5 0 8 9 9 7 4 5 1 1

Manifest Tracking Info.
007497944FLE

Sales Order No: D19679640

LINE ITEM INFORMATION

Line Item:	Page No:	Profile No:	Treatability Group:	LDR Disposal Category
1.	1	CH770290	NON-WASTEWATER	2 (This is subject to LDR.)

EPA Waste Code	EPA Waste SubCategory
D040D043	NONE

LDR Chemical Data

Chemical	Underlying Hazardous Constituents	Constituents of Concern	Contaminants Subject to Treatment
TOTAL PCB'S (SUM OF ALL PCB ISOMERS, OR ALL AROCHL	Y	N	N
TRICHLOROETHYLENE	Y	N	N
VINYL CHLORIDE	Y	N	N

Certification	Applies to Manifest Line Items
Pursuant to 40 CFR 268.7(a), I hereby notify that this shipment contains waste restricted under 40 CFR Part 268.	1.

Waste analysis data, where available, is attached.

Signature : [illegible] Print Name [illegible]

Title : Environmental Planner Date : Apr 14, 14

019679640 SCPPW 12/11/2013

Please print or type. (Form designed for use on elite (12-pitch) typewriter.) Form Approved. OMB No. 2050-0039

UNIFORM HAZARDOUS WASTE MANIFEST

1. Generator ID Number: MVD000974511
2. Page 1 of: 1
3. Emergency Response Phone: (800) 483-3718
4. Manifest Tracking Number: 007497944 FLE

5. Generator's Name and Mailing Address
New Bedford Environmental Stewardship
220 Hathaway Boulevard
New Bedford, MA 02740
Generator's Phone: (508) 496-2007

Generator's Site Address (if different than mailing address): SAME

6. Transporter 1 Company Name: Clean Harbors Environmental Services Inc
U.S. EPA ID Number: MAD039322250

7. Transporter 2 Company Name:
U.S. EPA ID Number:

8. Designated Facility Name and Site Address
Clean Harbors Deer Park, LLC
2027 Independence Parkway South
La Porte, TX 77571
Facility's Phone: (281) 930-2300
U.S. EPA ID Number: TXD055141378

9a. HM	9b. U.S. DOT Description (including Proper Shipping Name, Hazard Class, ID Number, and Packing Group (if any))	10. Containers No.	10. Containers Type	11. Total Quantity	12. Unit Wt./Vol.	13. Waste Codes		
X	1. RQ, UN3432, WASTE POLYCHLORINATED BIPHENYLS, SOLID, 9, PG III	001	DM	110	K	D040	D043	
	2.							
	3.							
	4.							

14. Special Handling Instructions and Additional Information
LOH772280 1xSS ERG#171 O.S.D - 2-18-14
ID# NBE #2

15. **GENERATOR'S/OFFEROR'S CERTIFICATION:** I hereby declare that the contents of this consignment are fully and accurately described above by the proper shipping name, and are classified, packaged, marked and labeled/placarded, and are in all respects in proper condition for transport according to applicable international and national governmental regulations. If export shipment and I am the Primary Exporter, I certify that the contents of this consignment conform to the terms of the attached EPA Acknowledgment of Consent.
I certify that the waste minimization statement identified in 40 CFR 262.27(a) (if I am a large quantity generator) or (b) (if I am a small quantity generator) is true.

Generator's/Offeror's Printed/Typed Name: [illegible] Signature: [illegible] Month: 4 Day: 14 Year: 14

INT'L

16. International Shipments ☐ Import to U.S. ☐ Export from U.S. Port of entry/exit:
Transporter signature (for exports only): Date leaving U.S.:

TRANSPORTER

17. Transporter Acknowledgment of Receipt of Materials

Transporter 1 Printed/Typed Name: BRUNO D. LOMEIA Signature: Bruno D. Lomeia Month: 4 Day: 14 Year: 14

Transporter 2 Printed/Typed Name: Signature: Month: Day: Year:

DESIGNATED FACILITY

18. Discrepancy

18a. Discrepancy Indication Space ☐ Quantity ☐ Type ☐ Residue ☐ Partial Rejection ☐ Full Rejection

Manifest Reference Number:

18b. Alternate Facility (or Generator) U.S. EPA ID Number
Facility's Phone:

18c. Signature of Alternate Facility (or Generator) Month: Day: Year:

19. Hazardous Waste Report Management Method Codes (i.e., codes for hazardous waste treatment, disposal, and recycling systems)

1. H040	2.	3.	4.

20. Designated Facility Owner or Operator: Certification of receipt of hazardous materials covered by the manifest except as noted in Item 18a

Printed/Typed Name: Signature: Month: Day: Year:

EPA Form 8700-22 (Rev. 3-05) Previous editions are obsolete. **GENERATOR'S INITIAL COPY**

Clean Harbors has the appropriate permits for and will accept the waste the generator is shipping.

D195750040 SCPPW 12/11/2013

Please print or type. (Form designed for use on elite (12-pitch) typewriter.) Form Approved. OMB No. 2050-0039

UNIFORM HAZARDOUS WASTE MANIFEST

1. Generator ID Number: MVD089974511
2. Page 1 of: 1
3. Emergency Response Phone: (800) 483-8748
4. Manifest Tracking Number: 007497945 FLE

5. Generator's Name and Mailing Address
New Bedford Environmental Stewardship
230 Hathaway Boulevard
New Bedford, MA 02740
Generator's Phone: (508) 400-2087

Generator's Site Address (if different than mailing address): SAME

6. Transporter 1 Company Name: Clean Harbors Environmental Services Inc — U.S. EPA ID Number: MAD039322250

7. Transporter 2 Company Name — U.S. EPA ID Number:

8. Designated Facility Name and Site Address
Clean Harbors Grassy Mountain LLC
3 Miles East 7 Miles North of Knolls
Grantsville, UT 84029
Facility's Phone: (435) 884-8900

U.S. EPA ID Number: UTD991301746

9a. HM	9b. U.S. DOT Description (including Proper Shipping Name, Hazard Class, ID Number, and Packing Group (if any))	10. Containers No.	10. Containers Type	11. Total Quantity	12. Unit Wt./Vol.	13. Waste Codes		
x	1. RQ, UN3432, POLYCHLORINATED BIPHENYLS, SOLID, (BAG FILTERS, PCBS), 9, PG III	001	DM	80	K	MA02		
	2.							
	3.							
	4.							

14. Special Handling Instructions and Additional Information
1. 2H770296 1X55 ERG#171 T7 O.S.D. - 4-22-14 ID - NBE#1

15. **GENERATOR'S/OFFEROR'S CERTIFICATION:** I hereby declare that the contents of this consignment are fully and accurately described above by the proper shipping name, and are classified, packaged, marked and labeled/placarded, and are in all respects in proper condition for transport according to applicable international and national governmental regulations. If export shipment and I am the Primary Exporter, I certify that the contents of this consignment conform to the terms of the attached EPA Acknowledgment of Consent.
I certify that the waste minimization statement identified in 40 CFR 262.27(a) (if I am a large quantity generator) or (b) (if I am a small quantity generator) is true.

Generator's/Offeror's Printed/Typed Name: [illegible] for: [illegible] — Signature: [illegible] — Month 4 Day 14 Year 14

16. International Shipments ☐ Import to U.S. ☐ Export from U.S. Port of entry/exit:
Transporter signature (for exports only): Date leaving U.S.:

17. Transporter Acknowledgment of Receipt of Materials
Transporter 1 Printed/Typed Name: BRUNO D. LOREUA — Signature: Bruno D. Loreua — Month 4 Day 14 Year 14
Transporter 2 Printed/Typed Name — Signature: [illegible] — Month 4 Day 14 Year 14

18. Discrepancy
18a. Discrepancy Indication Space ☐ Quantity ☐ Type ☐ Residue ☐ Partial Rejection ☐ Full Rejection
Manifest Reference Number:

18b. Alternate Facility (or Generator) — U.S. EPA ID Number
Facility's Phone:

18c. Signature of Alternate Facility (or Generator) — Month Day Year

19. Hazardous Waste Report Management Method Codes (i.e., codes for hazardous waste treatment, disposal, and recycling systems)
1. H132 2. 3. 4.

20. Designated Facility Owner or Operator: Certification of receipt of hazardous materials covered by the manifest except as noted in Item 18a
Printed/Typed Name — Signature — Month Day Year

GENERATOR — INT'L — TRANSPORTER — DESIGNATED FACILITY

EPA Form 8700-22 (Rev. 3-05) Previous editions are obsolete. **GENERATOR'S INITIAL COPY**

Clean Harbors has the appropriate permits for and will accept the waste the generator is shipping.