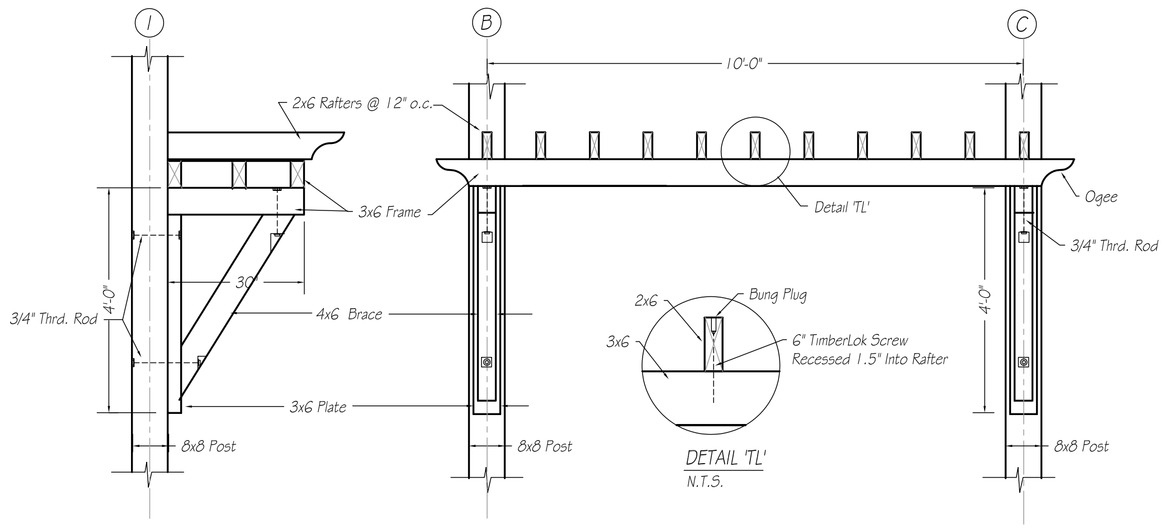

ENTRANCE CANOPY DETAILS
SCALE: 1/2" = 1'-0"

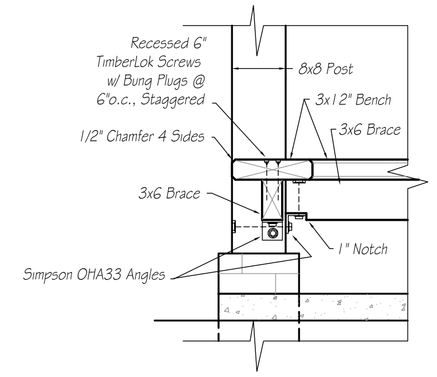

SECTION 'C' THRU BENCH
SCALE: 3/4" = 1'-0"

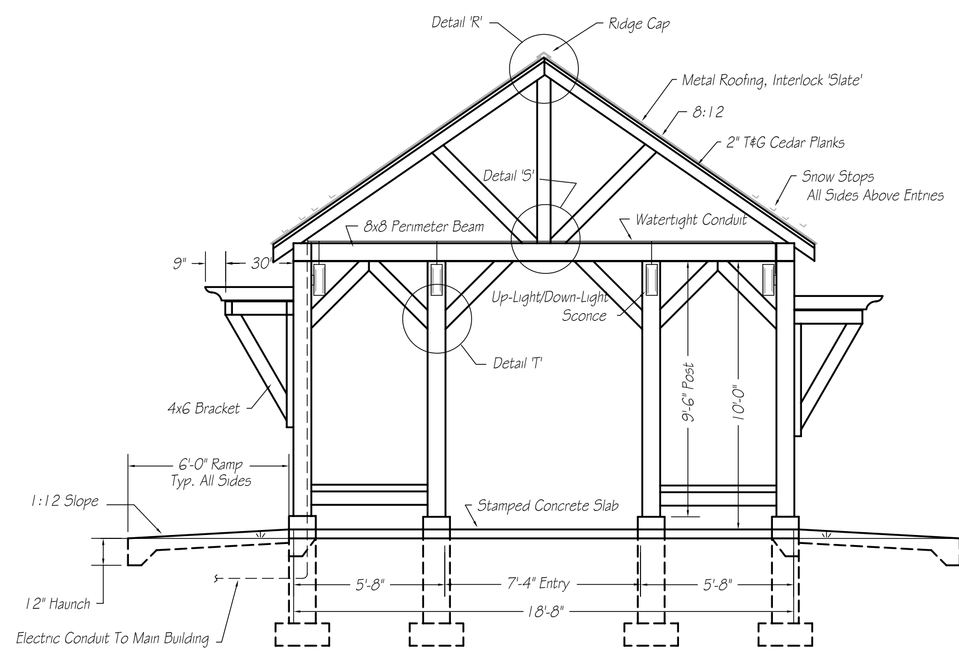

SECTION 'B'-'B'
SCALE: 1/4" = 1'-0"

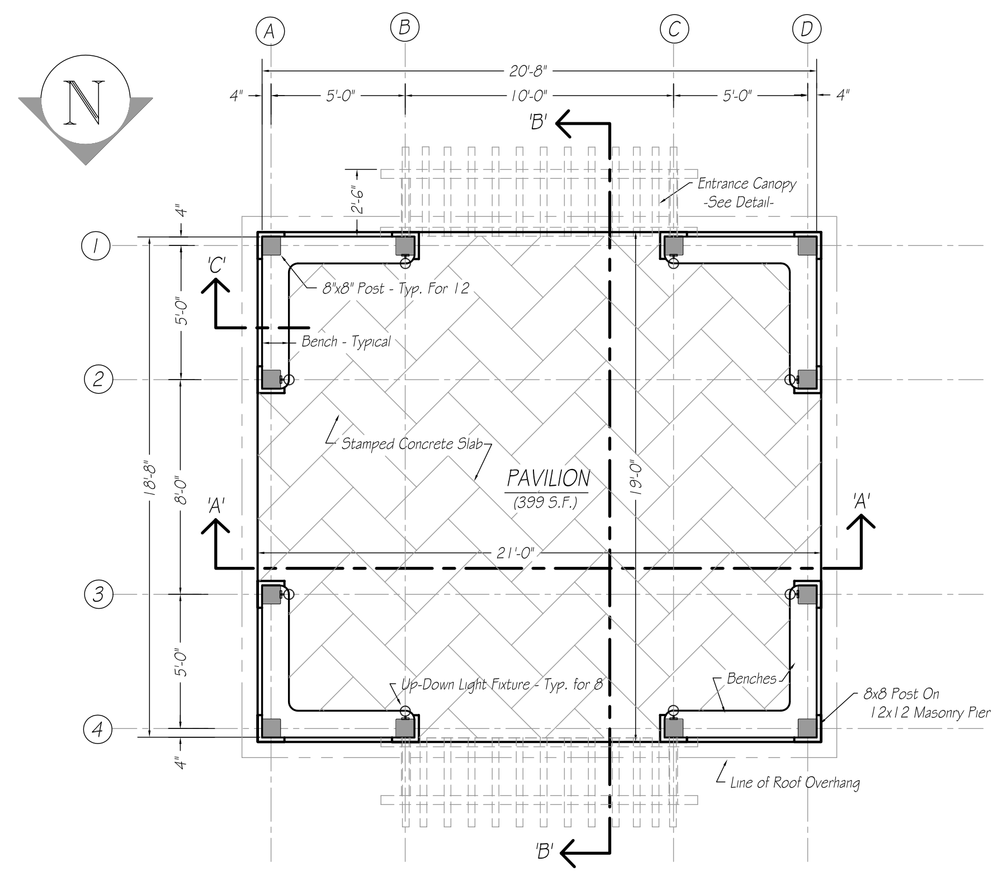

NOTE: SEE DRAWING 'S-1' FOR STRUCTURAL DETAILS.

PLAN VIEW
SCALE: 1/4" = 1'-0"

SPECIFICATIONS:

1. THIS STRUCTURE IS DESIGNED TO COMPLY WITH THE REQUIREMENTS OF THE MASS. STATE BUILDING CODE FOR 110-MPH WIND ZONE, EXPOSURE C.
2. THE CONTRACTOR IS RESPONSIBLE TO VERIFY THE FOUNDATION LOCATION AND ELEVATIONS IN ACCORDANCE WITH THE PREPARED BY THE CITY OF NEW BEDFORD, DEPARTMENT OF PUBLIC INFRASTRUCTURE.
3. THE CONTRACTOR SHALL COORDINATE THE LOCATION AND SIZE OF OPENINGS FOR UNDEGROUND UTILITIES PRIOR TO THE ERECTION OF FORMS AND THE POURING OF CONCRETE.
4. ALL CONTRACTORS SHALL SAFELY SHORE, BRACE OR SUPPORT ALL WORK AS REQUIRED, AND SHALL INSURE THAT THE WORK IS CONDUCTED IN ACCORDANCE WITH OSHA SAFETY RULES AND REQUIREMENTS.
5. CONCRETE FOR FOOTINGS, FOUNDATIONS AND SLABS SHALL HAVE A MINIMUM 3000 PSI COMPRESSIVE STRENGTH AT 28 DAYS. MAXIMUM CONCRETE SLUMP SHALL BE 5 INCHES. ALL CONCRETE SHALL HAVE MAXIMUM 1-INCH AGGREGATE SIZE AND MINIMUM 6% AIR ENTRAINMENT. CONCRETE FOR SLABS SHALL HAVE 'FIBER-MESH' REINFORCING IN MIX.
   ALL CONCRETE SHALL BE THOROUGHLY CONSOLIDATED DURING PLACEMENT WITH MECHANICAL VIBRATION.
   CONCRETE WHEN PLACED SHALL HAVE A TEMPERATURE BETWEEN 50 DEGREES F. TO 70 DEGREES F. DURING COLD WEATHER (AMBIENT TEMP. BELOW 40 F.) THE CONTRACTOR SHALL MAINTAIN A MINIMUM CONCRETE TEMPERATURE OF 50 F. FOR THREE DAYS AND ABOVE 32 F. FOR 14 DAYS AFTER PLACEMENT. DURING HOT WEATHER (AMBIENT TEMP. ABOVE 80 F.) THE CONTRACTOR SHALL FOLLOW RECOMMENDATIONS IN ACI 305R TO MINIMIZE TEMPERATURE AND SHRINKAGE CRACKING.
   THE CONTRACTOR SHALL ENGAGE THE SERVICES OF A RECOGNIZED CONCRETE TESTING LABORATORY TO PREPARE A MINIMUM OF THREE TEST CYLINDERS FOR EACH CONCRETE POUR. TEST REPORTS SHALL BE SUBMITTED TO THE ENGINEER FOR THE COMPRESSIVE STRENGTH OF EACH POUR AT 7 DAYS, 14 DAYS AND 28 DAYS. CONCRETE THAT DOES NOT OBTAIN THE MINIMUM REQUIRED COMPRESSIVE STRENGTH SHALL BE REMOVED AND REPLACED AT NO EXPENSE TO THE OWNER.
6. REINFORCING STEEL SHALL BE DEFORMED BARS CONFORMING TO ASTM A615 GRADE 60. PROVIDE SUITABLE SPACING, CHAIRS, TIES, ETC. FOR SUPPORTING REINFORCING STEEL IN THE PROPER POSITION WHILE PLACING CONCRETE. ARRANGEMENT AND BENDING OF REINFORCING STEEL SHALL BE IN ACCORDANCE WITH THE A.C.I. DETAILING MANUAL.
7. CONCRETE COVER OVER REINFORCING STEEL SHALL BE AS SHOWN ON DETAILS, BUT NO LESS THAN 2 INCHES.
8. MINIMUM SOIL BEARING CAPACITY EQUALS 2000 PSF. SOIL WITH LESSER BEARING CAPACITY SHALL BE REMOVED & REPLACED. ALL SOIL OVER WHICH CONCRETE IS TO BE PLACED SHALL BE FREE OF EXPANSIVE OR COMPRESSIBLE DEBRIS AND ORGANIC MATERIALS, AND SHALL NOT BE FROZEN.
9. STEEL REINFORCEMENT SHALL NOT BE BENT IN THE FIELD UNLESS THE BARS ARE SIZE 6 OR SMALLER. TIES, STIRRUPS AND HOOPS SHALL CONFORM TO ASTM A615. MINIMUM OVERLAP BETWEEN BARS SHALL BE 40 BAR DIAMETERS
10. WELDED WIRE FABRIC SHALL CONFORM TO ASTM A185, SUPPLIED IN THE LONGEST LENGTHS PRACTICAL. ADJOINING SHEETS SHALL BE LAPPED ONE GRID PLUS 2 INCHES.
11. ANCHOR BOLTS SHALL BE INSTALLED IN THE SIZES AND LOCATIONS NOTED ON THE DRAWINGS.
12. WOOD TIMBER FRAME SHALL BE WESTERN RED CEDAR #1 APPEARANCE KNOTTY GRADE S4S WITH LIMITED SPIKE KNOTS, HEART KNOTS AND PIN KNOTS. MAXIMUMUM MOISTURE CONTENT = 19%; MINIMUM FLEXURAL STRENGTH = 850 PSI.
13. BOLTS, NUTS & WASHERS SHALL BE GALVANIZED STEEL, SUPPLIED IN SIZES NOTED AND INSTALLED FLUSH WITH WORK. . NO CUTTING OF GALV. BOLTS SHALL BE PERFORMED. THREADED ROD FASTENERS & NUTS SHALL BE TYPE 316 STAINLESS STEEL.
14. METAL CONNECTIONS SHALL BE SIMPSON STRONG-TIE ARCHITECTURAL PRODUCTS GROUP WITH POWDER-COATED FLAT BLACK PAINT AND GALVANIZED OR 316 STAINLESS STEEL HARDWARE.
15. ROOF DECKING SHALL BE WESTERN RED CEDAR GRADE #1-2F WITH LIMITED SPIKE KNOTS, HEART KNOTS & PIN KNOTS. MAXIMUM MOISTURE CONTENT = 19%; MINIMUM FLEXURAL STRENGTH = 850 PSI.
16. INTERLOCKING METAL ROOFING SYSTEM SHALL BE INTERLOCK 'SLATE ROOF' INSTALLED IN ACCORDANCE WITH THE MANUFACTURER'S REQUIREMENTS FOR FOR 110-MPH HIGH WIND ZONE, EXPOSURE C. COLOR SHALL BE WEATHERED GREY.
17. ALL ELECTRICAL WIRING AND LIGHTING FIXTURES SHALL BE SURFACE-MOUNTED WATER-TIGHT CONDUIT, NEMA 4X, INSTALLED ON EXTERIOR OF POSTS AND TOPS OF PERIMETER BEAMS WHEREVER POSSIBLE.
18. LIGHTING FIXTURES SHALL BE OUTDOOR WALL CYLINDER, HEAVY ALUMINUM CONSTRUCTION, 5'x 14", ARCHITECTURAL BRONZE FINISH WITH (2) HALOGEN BULBS, UL-LISTED FOR WET LOCATIONS; EQUAL TO PROGRESS LIGHTING P5675.

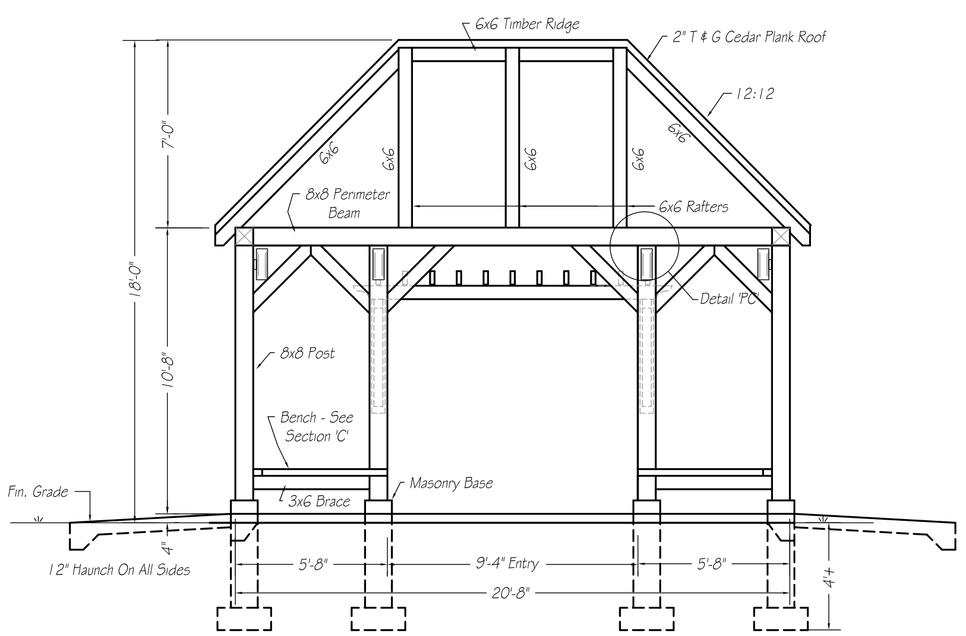

SECTION 'A'-'A'
SCALE: 1/4" = 1'-0"

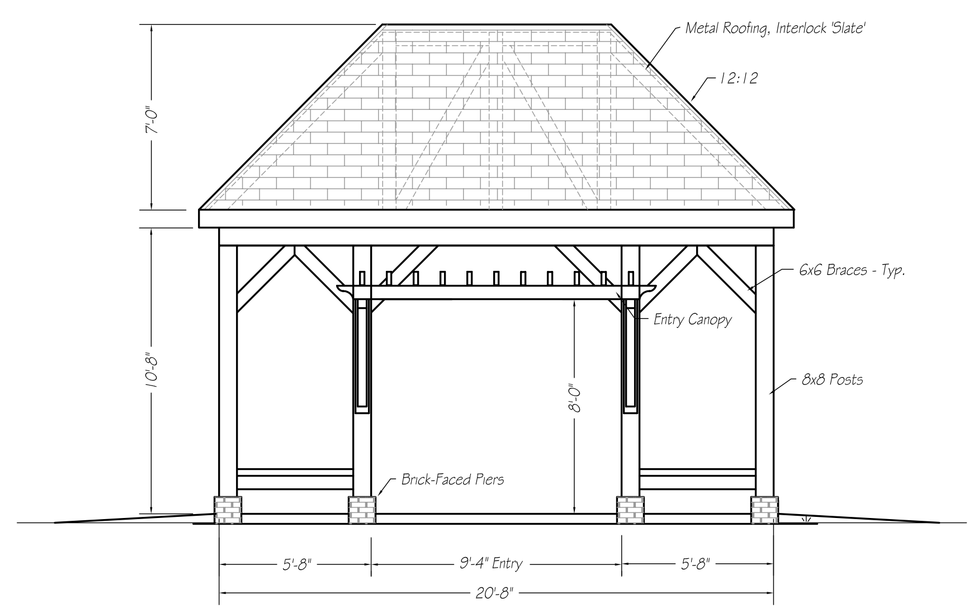

ELEVATIONS - EAST & WEST
SCALE: 1/4" = 1'-0"

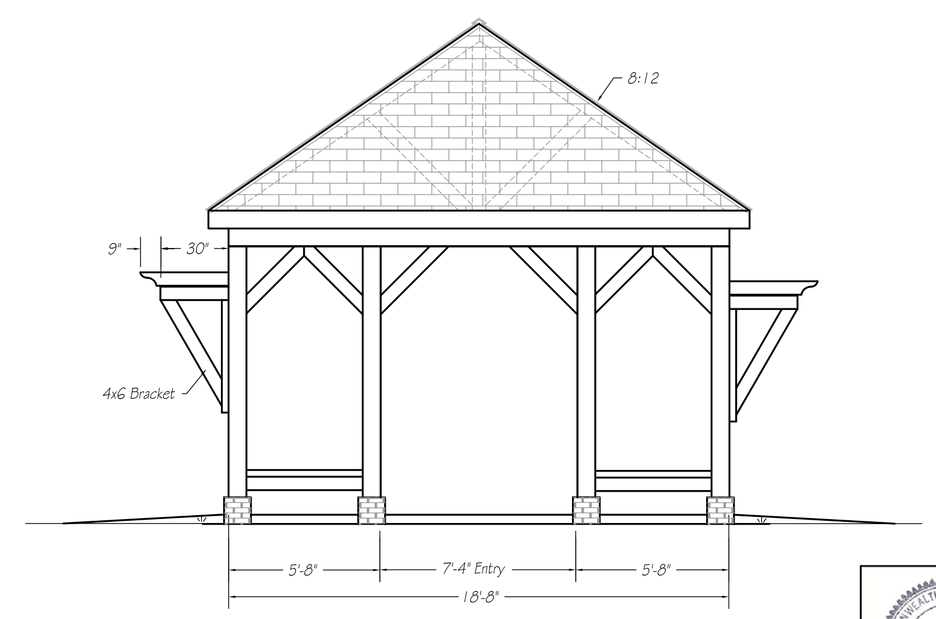

ELEVATIONS - NORTH & SOUTH
SCALE: 1/4" = 1'-0"

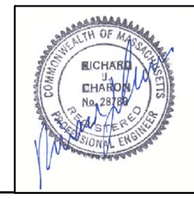

drawn: R.C.
check: R.J.C.
date: MARCH 31, 2014
scale: 1/4" = 1'-0"

revisions:

Consulting Engineer:
CAI Charon Associates, Inc.
Consulting Engineers
323 Neck Road - Rochester, MA 02770
Tel: 508-763-5362 Fax: 508-763-9582

Agency:
CITY OF NEW BEDFORD
Dept. of Public Facilities
294 Liberty Street
New Bedford, MA 02740
(508) 991-6150

NEW PAVILION
POPE'S ISLAND MARINE
H.D.C. - PORT OF NEW BEDFORD
102 POPE'S ISLAND
NEW BEDFORD, MASS.

drawing title:
NEW PAVILION

drawing no.:
A-1