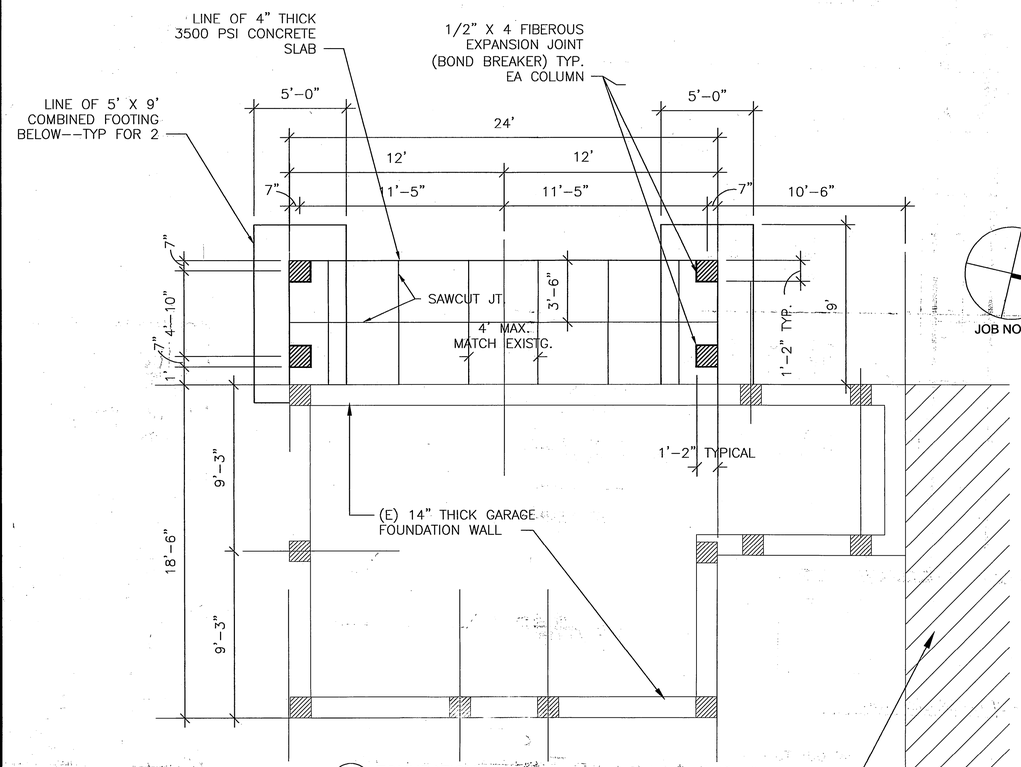

2 FOUNDATION PLAN
1/4"=1'-0"

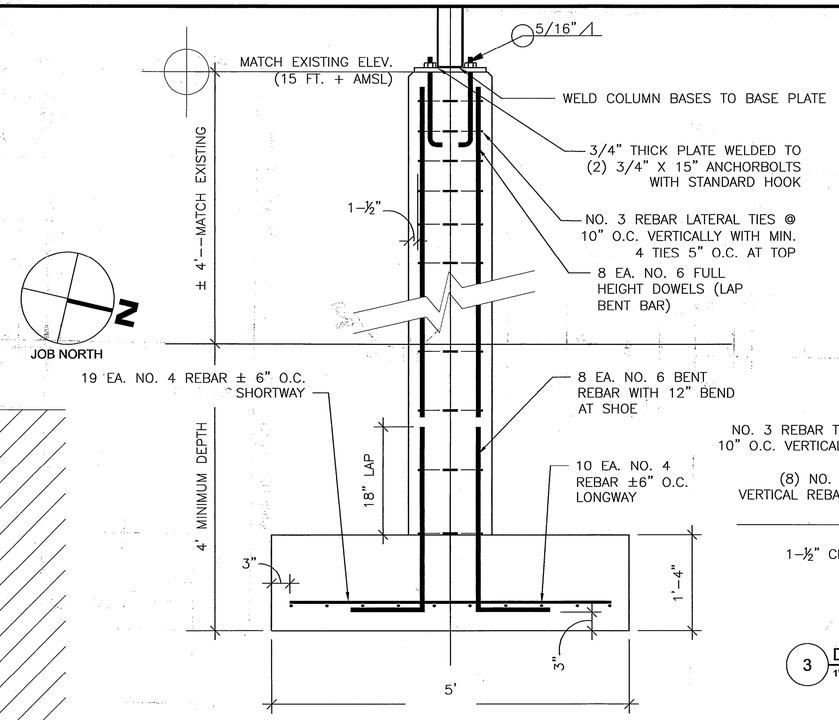

4 DET.--COLUMN SECTION
1" = 1'-0"

NOTES:
1) LOCVATION IS IN A COSTAL FLLOD ZONE: VE ELEVATION 15 FT. A.M.S.L. (ABOVE MEAN SEAL LEVEL)
2. GRADE ELEVATION IS APPROXIMATELY 11 FT. A.M.S.L.
3. ALL CONSTRUCTION IN ACCORDANCE WITH MASS. STATE BUILDING CODE.
4. SOIL BEARING CAPACITY MINIMUM 2-TONS/SQ. FT.
5. EXTERIOR CONCRETE SLABS/SIDEWALKS 3500 PSI @ 28 DAYS WITH FIBERMESH REINFORCING.
6. ALL OTHER CONCRETE (FOUNDATIONS) 3000 PSI @ 28 DAYS.
7. ALL REINFORCING STEEL GRADE 60 DEFORMED BAR.
8. ALL STRUCTURAL STEEL IN ACCORDANCE WITH ASCI SPECIFICATIONS.
9. BEARING PLATES A-36.
10. ANCHOR BOLTS A-307 MIN.

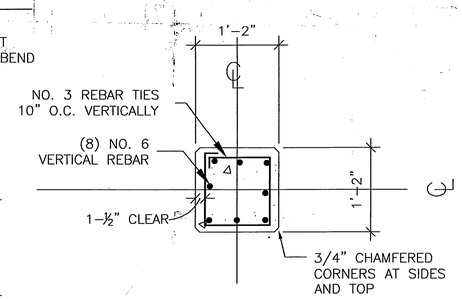

3 DET.--COLUMN PLAN SECTION
1" = 1'-0"

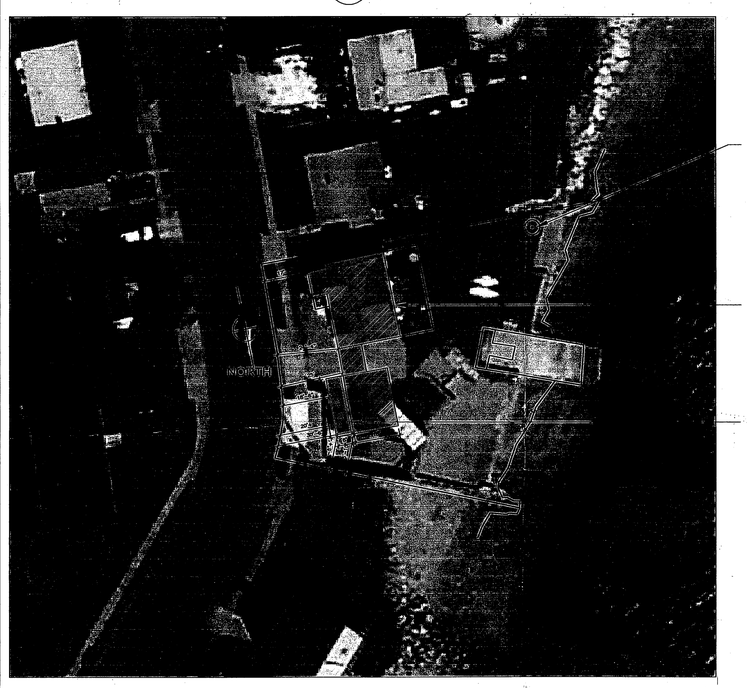

1 PLOT PLAN
1"=30'-0"

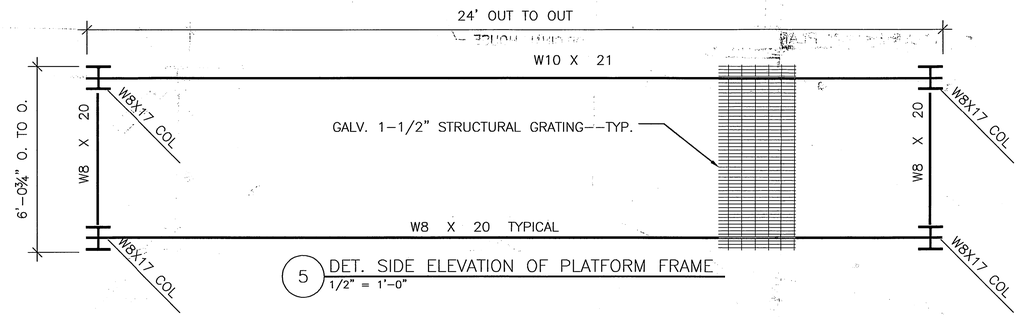

5 DET. SIDE ELEVATION OF PLATFORM FRAME
1/2" = 1'-0"

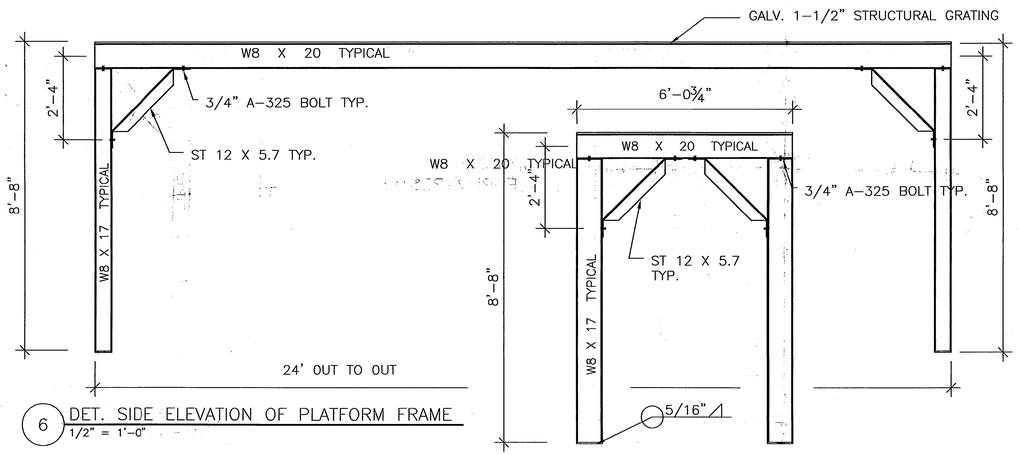

6 DET. SIDE ELEVATION OF PLATFORM FRAME
1/2" = 1'-0"

7 DET. END ELEVATION OF PLATFORM FRAME
1/2" = 1'-0"

MW DB
MICHAEL WALKER DESIGN/BUILDER, llc
500 Horseneck Road
Dartmouth, MA 02748
Tel: (508) 287-4313
Fax: (508) 300-6051
E-mail: mwdb@comcast.net

PROJECT NO:	GLICKMAN
DRAWN BY:	MW
CHECKED BY:	
CAD FILE:	GLICKMAN_A1

SUBMITTALS

7		
6		
5		
4		
3		
2		
1	12-9-09	ISSUED

THE INFORMATION CONTAINED IN THIS SET OF DOCUMENTS IS PROPRIETARY BY NATURE. ANY USE OR DISCLOSURE OTHER THAN THAT WHICH RELATES TO BEACON WIRELESS MANAGEMENT IS STRICTLY PROHIBITED. IF THIS DRAWING IS NOT 24"x36", IT IS NOT TO SCALE!

PROFESSIONAL SEAL

SITE
GLICKMAN RESIDENCE
1550 PADANARAM AVE
NEW BEDFORD, MA 02740

SHEET TITLE
PLATFORM EXTENSION

SHEET NUMBER
A1