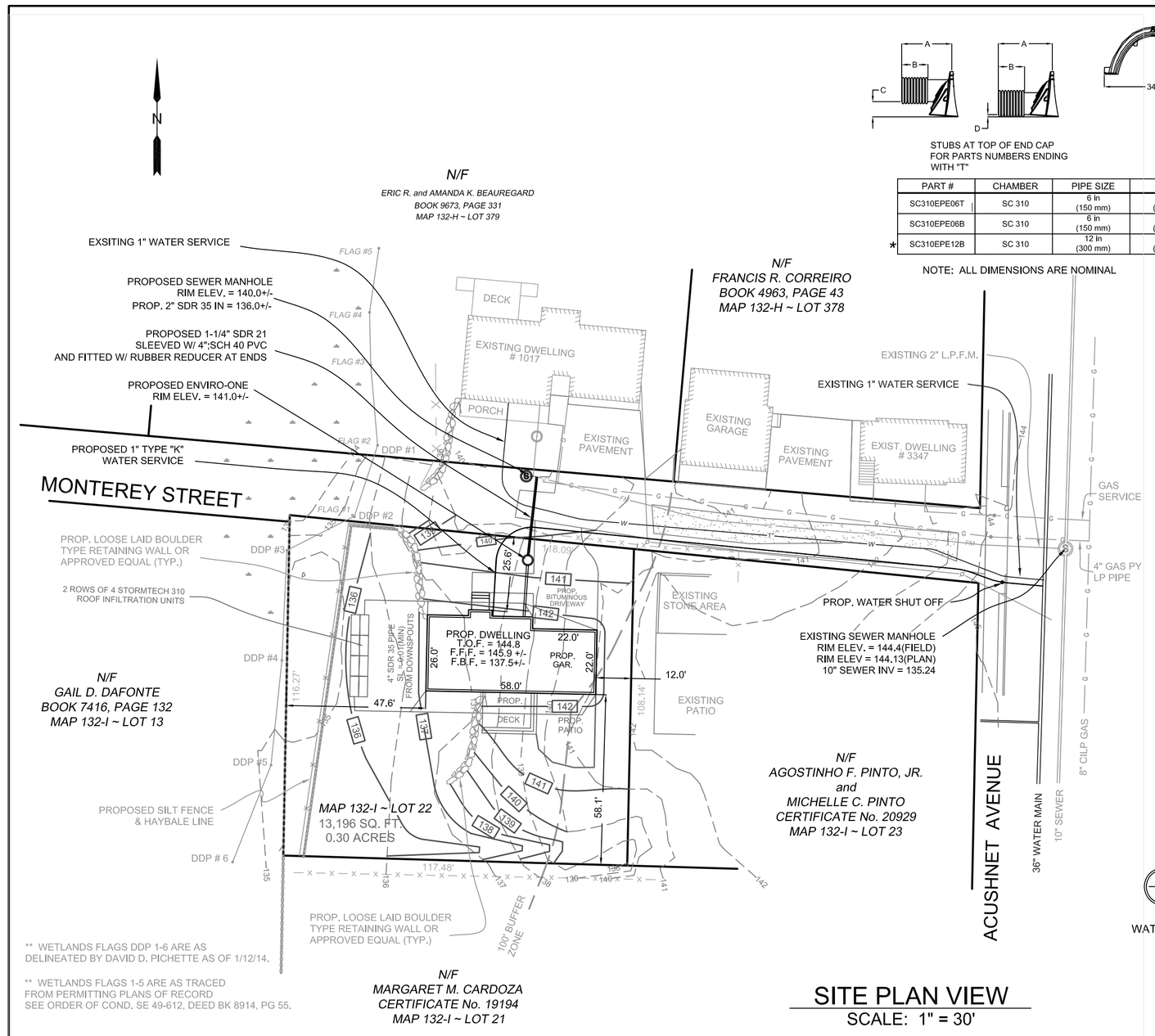

SITE PLAN VIEW
SCALE: 1" = 30'

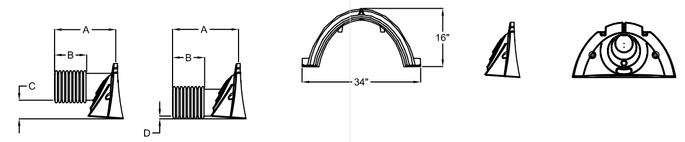

STUBS AT TOP OF END CAP FOR PARTS NUMBERS ENDING WITH "T"

STUBS AT BOTTOM OF END CAP FOR PARTS NUMBERS ENDING WITH "B"

PART #	CHAMBER	PIPE SIZE	A	B	C	D
SC310EPE06T	SC 310	6 in (150 mm)	9.60 in (244 mm)	3.85 in (98 mm)	5.80 in (147 mm)	N/A
SC310EPE06B	SC 310	6 in (150 mm)	9.60 in (244 mm)	3.85 in (98 mm)	N/A	0.50 in (13 mm)
* SC310EPE12B	SC 310	12 in (300 mm)	13.50 in (343 mm)	7.70 in (196 mm)	N/A	(23 mm)

NOTE: ALL DIMENSIONS ARE NOMINAL

1-888-892-2694

STORMTECH LLC CONCEPTUAL PLAN DISCLAIMER

THIS STORMTECH CHAMBER SYSTEM LAYOUT WAS PRODUCED TO DEMONSTRATE A BED LAYOUT THAT WILL HANDLE THE DESIGN VOLUME LISTED ABOVE. THE SIZING, FIT AND APPLICABILITY OF THE STORMTECH CHAMBER SYSTEM FOR THIS SPECIFIC PROJECT HAS NOT BEEN DETERMINED. IT IS THE ULTIMATE RESPONSIBILITY OF THE DESIGN ENGINEER TO ASSURE THAT THE STORMWATER SYSTEM DESIGN IS IN FULL COMPLIANCE WITH ALL APPLICABLE LAWS AND REGULATIONS. STORMTECH PRODUCTS MUST BE DESIGNED AND INSTALLED IN ACCORDANCE WITH STORMTECH'S MINIMUM REQUIREMENTS. STORMTECH LLC DOES NOT APPROVE PLANS, SIZING, OR SYSTEM DESIGNS. THE DESIGNING ENGINEER IS RESPONSIBLE FOR ALL DESIGN DECISIONS.

ALL STUBS, EXCEPT FOR THE * SC310EPE12B ARE PLACED AT BOTTOM OF END CAP SUCH THAT THE OUTSIDE DIAMETER OF THE STUB IS FLUSH WITH THE BOTTOM OF THE END CAP. FOR ADDITIONAL INFORMATION CONTACT STORMTECH AT

FOR THE SC310EPE12B THE 12" STUB LIES BELOW THE BOTTOM OF THE END CAP APPROXIMATELY 0.25". BACKFILL MATERIAL SHOULD BE REMOVED FROM BELOW THE N-12 STUB SO THAT THE FITTING SETS LEVEL.

DOWNSPOUT DRAINAGE DESIGN:

ASSUME 1" OF RAINFALL ON THE ENTIRE ROOF AREA.

ROOF AREA = 1,420 Sq.Ft.

USE THE HIGH CAPACITY STORMTECH CHAMBER SC310EPE06T AS DETAILED.

THEREFORE:

1,420 Sq.Ft. x 1"/12 inches per foot = 118 Cu.Ft.

118 Cu.Ft. / 14.7 Cu.Ft./chamber = 8 Chamber

Therefore: 9 chamber units required (2 Trenches)

However if contractor finds location and piping to be unfeasible an alternate configuration may be used, with a minimum of 1 unit per downspout leader if seperated.

All Gutters and downspouts to be equipped with Leaf Screens.

All piping and fittings used to connect to the downspouts are to be 4" SCH 40.

Gutters, downspouts and recharge system to be inspected and cleaned twice a year (June and December).

ACCEPTS 4" SCH 40 PIPE FOR CLEANOUT OR INSPECTION PORT

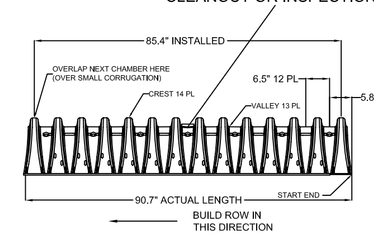

NOMINAL CHAMBER SPECIFICATIONS	34.0" x 16.0" x 85.4"
SIZE (W x H x INSTALLED LENGTH)	14.7 CUBIC FEET
CHAMBER STORAGE	31.0 CUBIC FEET
MINIMUM INSTALLED STORAGE	35 LBS.
WEIGHT	

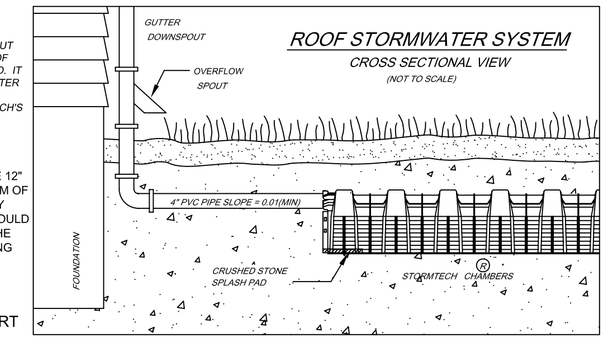

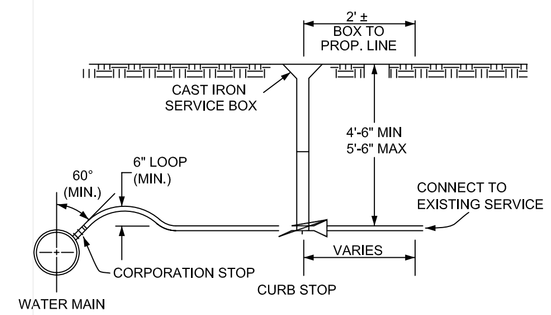

TYPICAL WATER SERVICE DETAIL
NOT TO SCALE

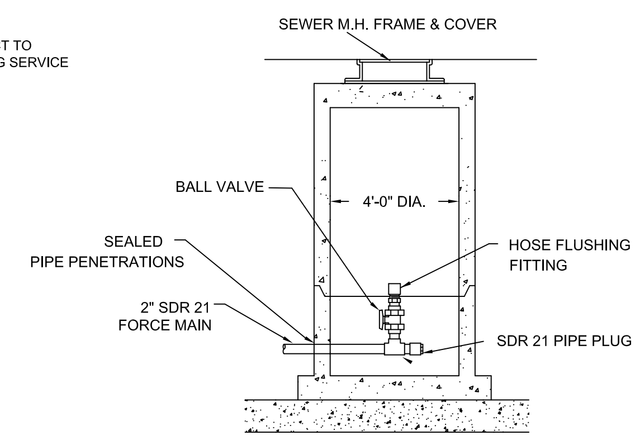

TYPICAL TERMINAL END MANHOLE DETAIL
NOT TO SCALE

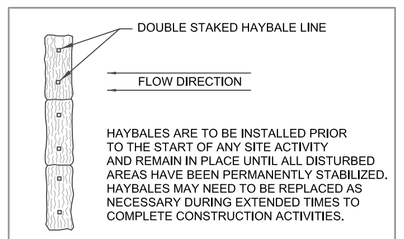

HAYBALES ARE TO BE INSTALLED PRIOR TO THE START OF ANY SITE ACTIVITY AND REMAIN IN PLACE UNTIL ALL DISTURBED AREAS HAVE BEEN PERMANENTLY STABILIZED. HAYBALES MAY NEED TO BE REPLACED AS NECESSARY DURING EXTENDED TIMES TO COMPLETE CONSTRUCTION ACTIVITIES.

HAYBALE
PLACEMENT DETAIL
(NOT TO SCALE)

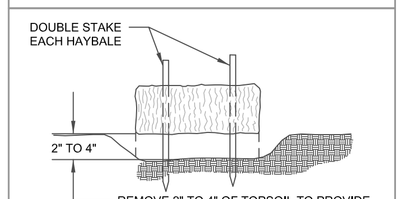

HAYBALE
INSTALLATION DETAIL
(NOT TO SCALE)

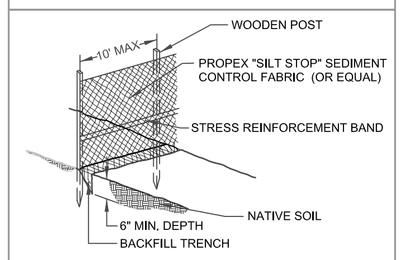

SILT FENCE
INSTALLATION DETAIL
(NOT TO SCALE)

ZONING REQUIREMENTS:

ZONING IS RA - MUB		SETBACK REQUIREMENTS:	
MINIMUM LOT FRONTAGE	75.00'	MINIMUM FRONT YARD	20.00'
MINIMUM TOTAL AREA	8,000 sq. ft.	MINIMUM REAR YARD	30.00'
MAXIMUM % LOT COVERAGE	30% (Required)	MINIMUM REAR & SIDE YARD	10.0' & 12.0'
		% LOT COVERAGE PROVIDED	22.9%

GENERAL NOTES:

* LOCUS LOT IS SHOWN AL LOT 3 ON "PLAN OF LAND", DATED 5/02/1964 AND FILED AT THE BRISTOL COUNTY REGISTRY OF DEEDS IN THE LAND REGISTRATION OFFICE AS PLAN 17451.

* REFER TO LEGAL REFERENCE #20929.

1. SITE IS SHOWN AS LOT 22 ON NEW BEDFORD ASSESSORS MAP 130I.

2. EXISTING UTILITIES SHOWN HAVE BEEN TAKEN FROM RECORD DRAWINGS AND FROM SURFACE EVIDENCE OBTAINED BY ON-THE-GROUND SURVEY. NO REPRESENTATION AS TO THE ACCURACY OR COMPLETENESS OF THE UTILITIES SHOWN IS MADE BY THE SURVEYOR/ENGINEER. VERIFICATION OF UTILITIES AND LOCATIONS ARE THE RESPONSIBILITY OF THE CONTRACTOR WITH THE AID OF DIG SAFE AND OTHER RESPECTIVE UTILITY COMPANIES AS THEIR IS CONFLICTING INFO. ON RECORD. SEWER & WATER AS-BUILT INFORMATION GIVEN TO THIS OFFICE BY DPI AND NOT FIELD VERIFIED BY KRFE.

3. ALL CONSTRUCTION MATERIALS AND INSTALLATION METHODS TO CONFORM TO THE CITY OF NEW BEDFORD DEPARTMENT OF PUBLIC INFRASTRUCTURE SPECIFICATIONS AND THE COMMONWEALTH OF MASSACHUSETTS DEPARTMENT OF PUBLIC WORKS CONSTRUCTION STANDARDS, AS MOST RECENTLY AMENDED.

4. CONTRACTOR SHALL KEEP RECORDS OF LOCATIONS FOR ALL UNDERGROUND UTILITIES INSTALLED FOR USE IN COMPILING AN AS-BUILT SITE PLAN.

5. CONTRACTOR TO VERIFY AND CHECK BENCHMARK & ELEVATIONS AS SHOWN ON THIS PLAN PRIOR TO CONSTRUCTION. CONTRACTOR SHALL BE RESPONSIBLE FOR ANY AND ALL PERMITS AS MAY BE REQUIRED, CONTRACTOR ALSO REQUIRED TO PAY ALL PERMITS AND FEES ASSOCIATED WITH COMPLETION OF THE WORK.

6. ANY LAWN AREA DISTURBED DURING CONSTRUCTION TO BE LOAM AND SEEDED AFTER PROPER BACKFILLING AND ALL TRENCHES WITH IN THE EXISTING PAVEMENT TO BE REPAIRED PER DPI STANDARDS.

7. LOCUS IS TO SERVICED BY MUNICIPAL WATER AND L.P.F.M. SEWER CONNECTION.

8. THE ENVIRONMENTAL | ONE DH071/DR071-93 (2010-93 DETAILS) PUMP MAY BE DIRECT WIRED IN THE BUILDINGS MAIN ELECTRICAL PANEL THROUGH APPROPRIATE CONDUIT. THE ENVIRONMENTAL ONE ALARM WITH VISUAL AND AUDIBLE ALARM, MANUAL SILENCE, AND MANUAL RUN MUST BE INSTALLED IN A NORMALLY OCCUPIED PORTION OF THE BUILDING. IF INSTALLED OUTDOORS CONTRACTOR TO ENSURE THE PROPER EXTERIOR MOUNTED MODEL IS USEDALL ELECTRICAL CONNECTIONS SHALL CONFORM TO THE N.E.C. CODES BASED ON VOLTAGE SOURCE (240V OR 120V) AVAILABLE TO THE BUILDING. CONRACTOR TO VERIFY WITH OWNER AS TO CHOICE OF WIRELESS OR HARDWIRED UNITS PRIOR TO ORDERING. ALL COMPONENTS TO BE PURCHASED FROM FRMA & ASSOCIATES, INC.

9. ANCHOR TO BE INSTALLED TO PREVENT FLOATATION, MINIMUM RING OR CONCRETE TO BE SIZED IN ACCORDASNCE WITH EONES STANDARDS, ASSUMING A HIGH WATER TABLE.

10. THE PUMP SYSTEM SPECIFIED IS TO BE USED, NO ALTERNATE PUMPS ARE TO BE INSTALLED WITHOUT THE DPW & DESIGN ENGINEERS APPROVAL AS TO THE PUMP CHARACTERISTICS AND SUITABILITY. PUMPS ARE SIZED NORMAL HOUSEHOLD TYPE SEWERAGE ONLY.

11. A BACKUP GENERATOR (ADEQUATE FOR SUPPLYING THE SEWAGE PUMP IN CASE OF ELECTRICAL FAILURE) IS STRONGLY RECOMMENDED IN WHICN A TRANSFER SWITCH MAY BE WARRANTED.

12. ALL SDR 21 PIPING TO BE INSTALLED 48 INCHES BELOW GRADE (BELOW THE FROST LINE) AND INSTALLED A MINIMUM OF 18 INCHES BELOW ANY WATER MAIN OR WATER SERVICE CROSSING.
ALL 4" SCH 40 PVC PIPING FROM THE DWELLINGS ARE TO BE SET WITH A SLOPE OF 0.02 (MIN)

13. ALL LATERAL KITS, ALARMS, CONTROL PANES, CHECK VALVES, ETC, AND PUMP RELATED ITEMS TO BE PURCHASED FROM F.F. MAHONY & ASSOSIATES, INC. AND INSTALLED AS TO THERE REQUIREMENTS.

NOTICE OF INTENT NOTES:

1. SITE IS NOT LOCATED WITHIN AN ESTIMATED HABITAT OF RARE WETLAND WILDLIFE SPECIES.

2. A PRECONSTRUCTION CONFERENCE, IF REQUIRED, IS TO BE HELD BETWEEN THE CONTRACTOR AND THE CONSERVATION AGENT PRIOR TO CONSTRUCTION.

3. ANY SILTATION FENCING OR HAYBALES ARE TO BE INSTALLED, AS SHOWN ON THE SITE PLAN, PRIOR TO ANY ACTIVITY AND ARE TO REMAIN IN PLACE AND BE MAINTAINED UNTIL ALL ACTIVITIES ARE COMPLETED AND VEGETATION ESTABLISHED.

4. ANY SUBSTANTIAL SILT ACCUMULATION AGAINST THE SILT FENCE IS TO BE REMOVED BY HAND LABOR. ALL CONSTRUCTION LITTER AND DEBRIS IS TO BE REMOVED FROM THE VICINITY OF THE SILT FENCE OR HAYBALE LINE DAILY.

5. NO REFUELING OF VEHICLES IS ALLOWED WITHIN 100 FEET OF THE RESOURCE AREA.

6. IF A CERTIFICATE OF COMPLIANCE IS REQUIRED AT THE COMPLETION OF THE PROJECT, NOTIFY THE CONSERVATION AGENT AND THE ENGINEERING COMPANY FOR ANY REQUIRED INSPECTIONS, REPORTS, OR AS-BUILT PLANS THAT MAY BE REQUIRED.

7. LOCUS IS NOT LOCATED WITHIN A SPECIAL FLOOD HAZARD ZONES AS DELINEATED ON THE FIRM MAP WITH COMMUNITY-PANEL NO 255216 - 0383F, DATED 7/17/2013.

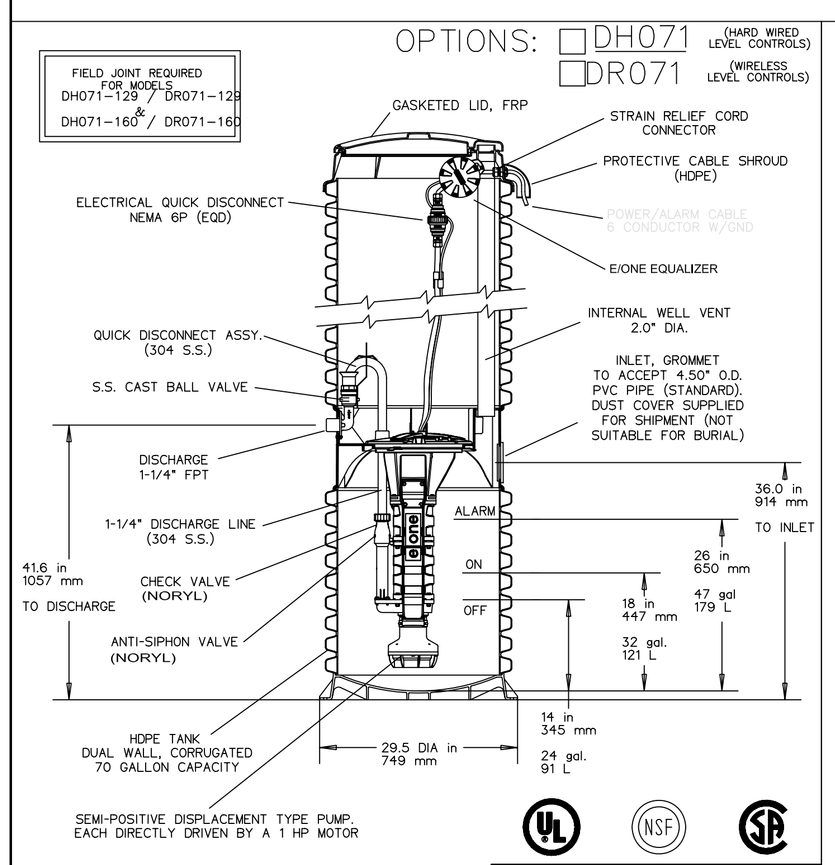

CONCRETE BALLAST MAY BE REQUIRED SEE INSTALLATION INSTRUCTIONS FOR DETAILS

AD	CH	04/27/09	B	
DR BY	CHK'D	DATE	ISSUE	SCALE

e one SEWER SYSTEMS

MODEL DH071 / DR071 DETAIL SHEET

NA0050P02

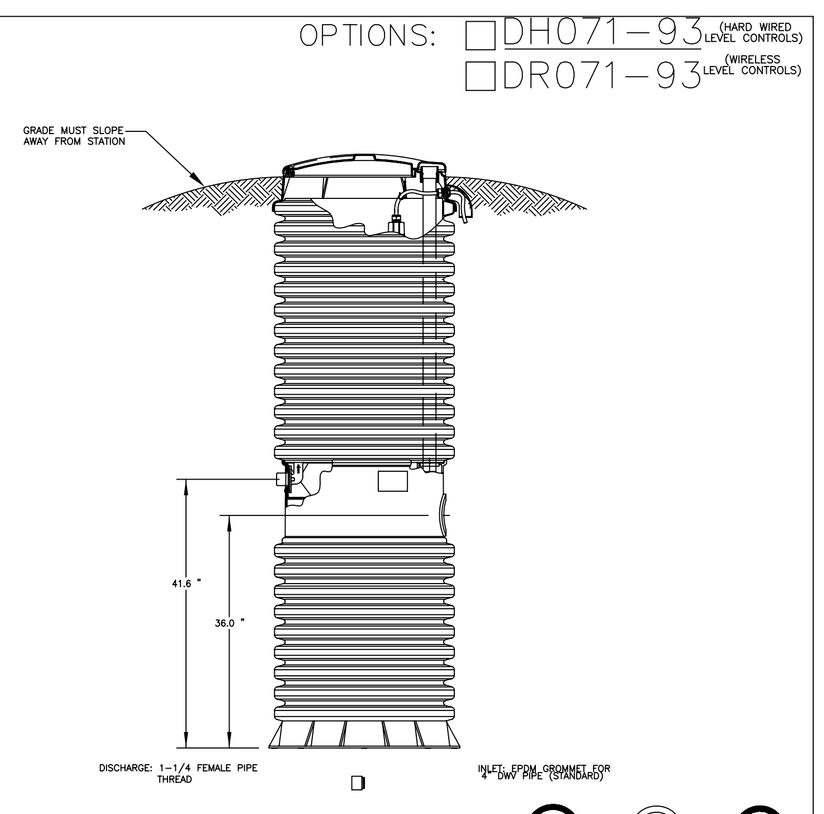

CONCRETE BALLAST MAY BE REQUIRED SEE INSTALLATION INSTRUCTIONS FOR DETAILS

AD	CAH	07/12/07	A	1/16
DR BY	CHK'D	DATE	ISSUE	SCALE

e one SEWER SYSTEMS

MODEL DH071-93 / DR071-93

NA0050P06

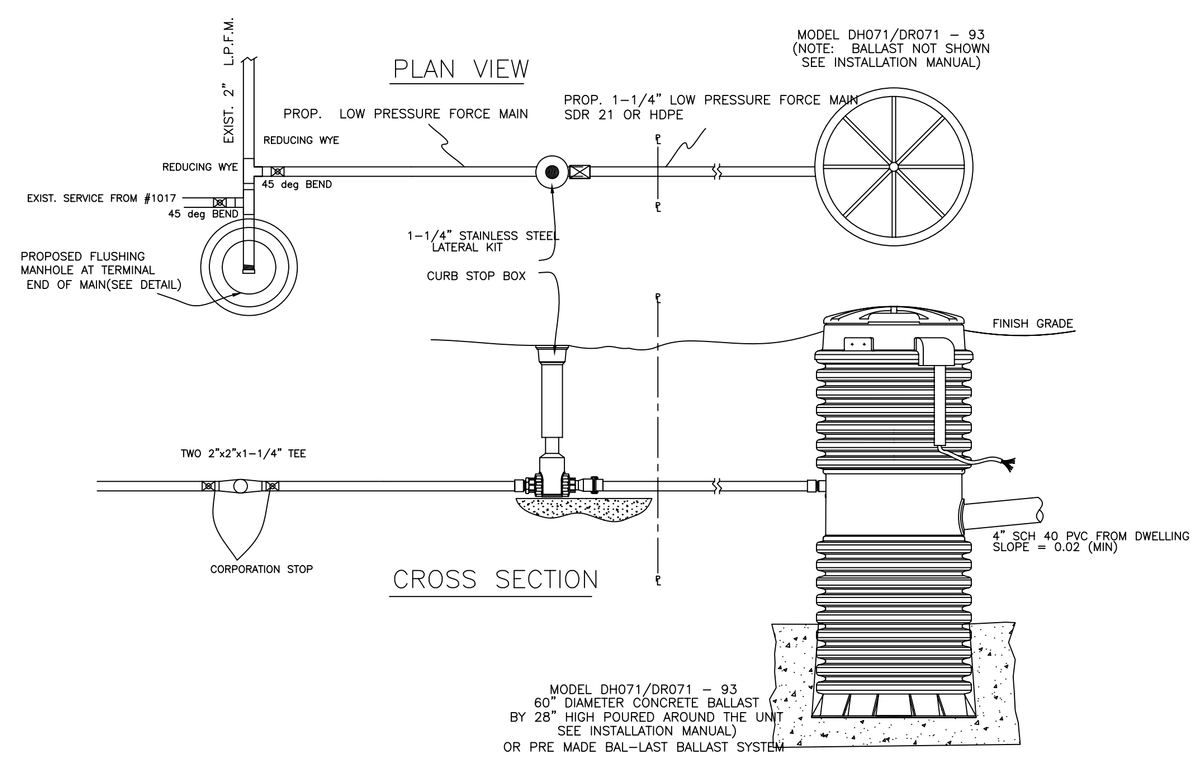

LOW PRESSURE SEWER CURB STOP/CLEAN OUT DETAIL
NOT TO SCALE

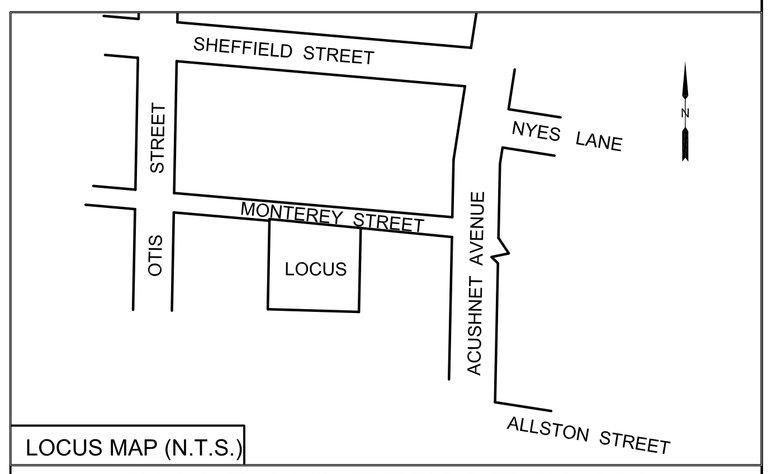

LOCUS MAP (N.T.S.)

BUILDING PERMIT PLAN

AGOSTINHO F. PINTO, JR.
MAP 132I, LOT 22
MONTEREY STREET
NEW BEDFORD, MA

KENNETH R. FERREIRA ENGINEERING
46 FOSTER STREET
NEW BEDFORD, MASSACHUSETTS 02740
TEL: (508) 992-0020 ~ FAX: (508) 992-3374

COMMONWEALTH OF MASSACHUSETTS KENNETH R. FERREIRA NO. 28716 REGISTERED PROFESSIONAL LAND SURVEYOR

COMMONWEALTH OF MASSACHUSETTS KENNETH R. FERREIRA CIVIL NO. 35835 REGISTERED PROFESSIONAL ENGINEER

KENNETH R. FERREIRA, R.L.S., P.E. DATE

DATE	REVISION	BY
DATE: 4/7/2014	DESIGNED BY:	
SCALE: AS NOTED	CHECKED BY: KRF	
DRAWN BY: KJS	JOB No: FE 4133	