S I T E P L A N

CLAREMONT HANGER
DOWNEY STREET
ASSESSORS MAP 123 LOT 3
NEW BEDFORD, MA

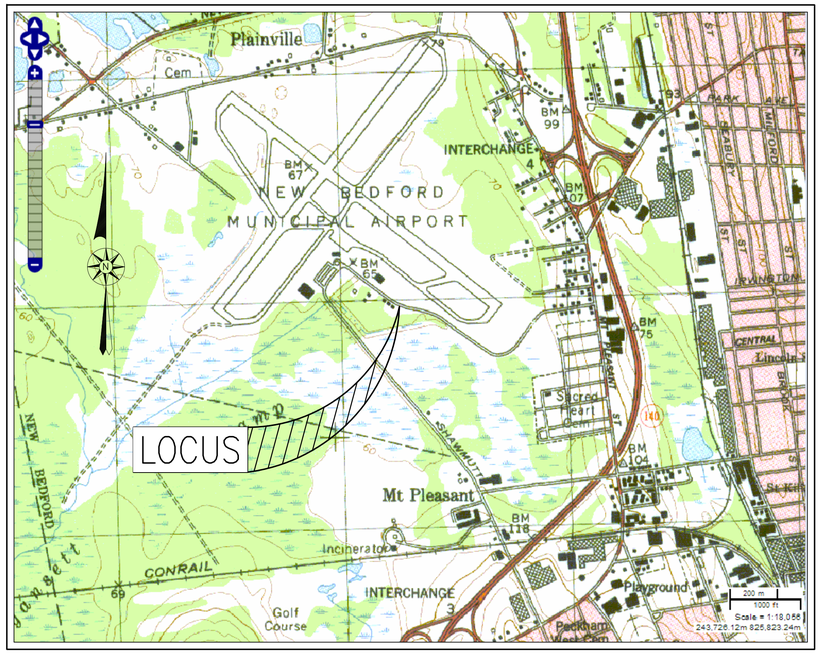

—AREA MAP—

SCALE: 1"=1,000'±

— INDEX —

SHEET	DESCRIPTION
1	COVER
2	EXISTING CONDITIONS
3	LAYOUT
4	UTILITIES & GRADING
5	DETAILS
6	NOTES
	ARCHITECTURAL PLANS

RECORD OWNER:
ASSESSORS MAP 123 LOT 3
CITY OF NEW BEDFORD
AIRPORT COMMISSION
131 WILLIAM STREET
NEW BEDFORD, MA 02740
DEED BOOK 1012 PAGE 22

REVISIONS

1	4/22/14	PER AIRPORT COMM.
2	5/29/14	PER CON COMM.
3	6/20/14	PER CON COMM.

COMMONWEALTH OF MASSACHUSETTS
CHRISTIAN ALBERT FARLAND
No. 47544
CIVIL
REGISTERED PROFESSIONAL ENGINEER

THOMPSONFARLAND
PROFESSIONAL ENGINEERS // LAND SURVEYORS
www.ThompsonFarland.com
(MAIN OFFICE) 398 COUNTY STREET, NEW BEDFORD, MA 02740 P.508.717.3479
NEW BEDFORD | TAUNTON | CAMBRIDGE | MARLBOROUGH

DRAWN BY: CKG
DESIGNED BY: CAF
CHECKED BY: CAF

SITE PLAN
DOWNEY STREET
ASSESSORS MAP 123 LOT 3
NEW BEDFORD, MASSACHUSETTS

PREPARED FOR: CLAREMONT COMPANIES
1 LAKESHORE CENTER
BRIDGEWATER, MA 02324

FEBRUARY 14, 2014
SCALE: AS NOTED
JOB NO. 13-894
LATEST REVISION: JUNE 20, 2014

COVER

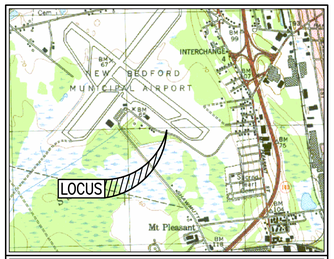

LOCUS MAP SCALE: 1"=2,000'±

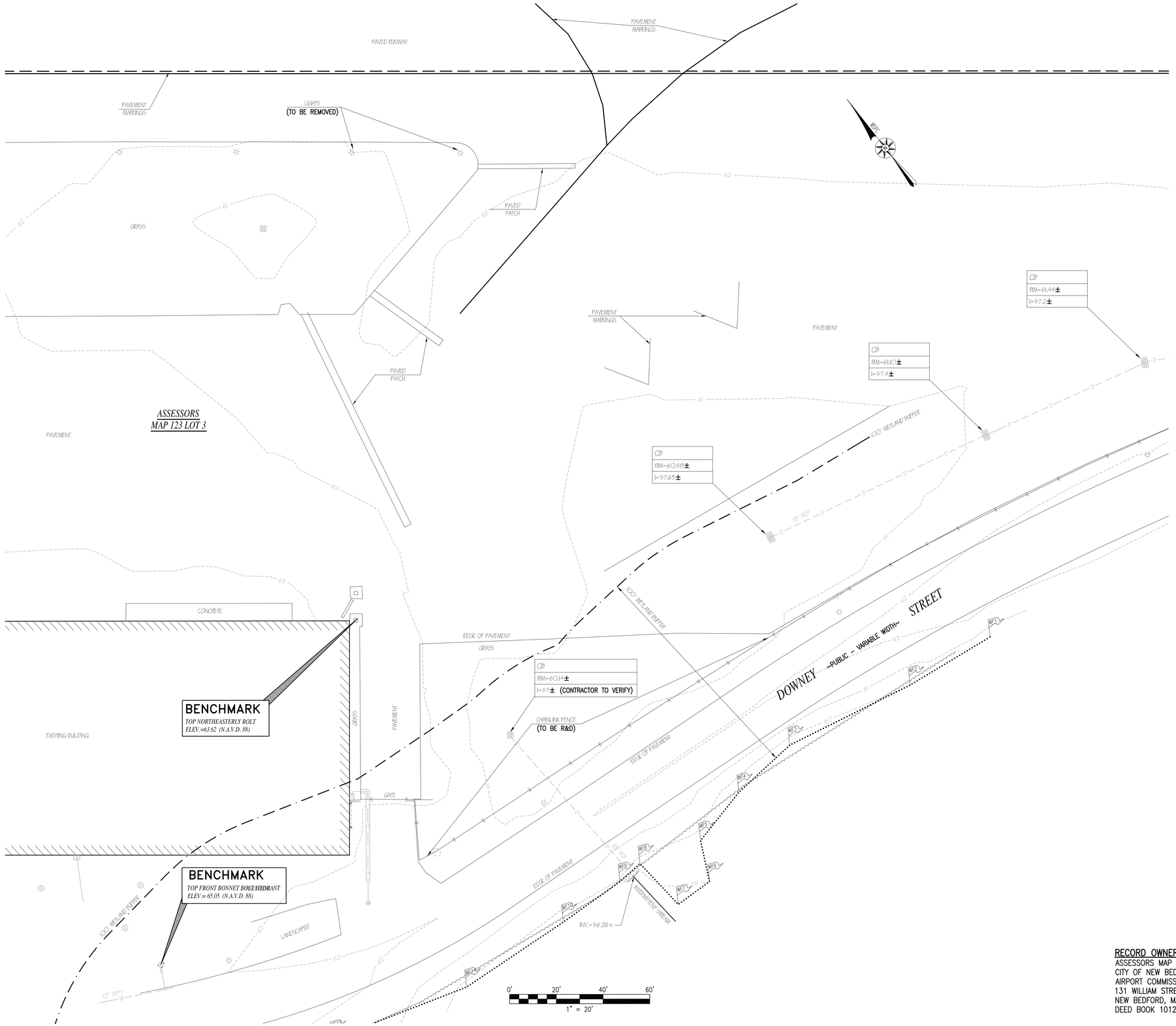

RECORD OWNER:
ASSESSORS MAP 123 LOT 3
CITY OF NEW BEDFORD
AIRPORT COMMISSION
131 WILLIAM STREET
NEW BEDFORD, MA 02740
DEED BOOK 1012 PAGE 22

REVISIONS

1	4/22/14	PER AIRPORT COMM.
2	5/29/14	PER CON COMM.
3	6/20/14	PER CON COMM.

COMMONWEALTH OF MASSACHUSETTS
CHRISTIAN ALBERT FARLAND
No. 47544
CIVIL

THOMPSONFARLAND
PROFESSIONAL ENGINEERS // LAND SURVEYORS
www.ThompsonFarland.com
(MAIN OFFICE) 398 COUNTY STREET, NEW BEDFORD, MA 02740 P.508.717.3479
NEW BEDFORD | TAUNTON | CAMBRIDGE | MARLBOROUGH

DRAWN BY: CKG
DESIGNED BY: CAF
CHECKED BY: CAF

SITE PLAN
DOWNEY STREET
ASSESSORS MAP 123 LOT 3
NEW BEDFORD, MASSACHUSETTS

PREPARED FOR: CLAREMONT COMPANIES
1 LAKESHORE CENTER
BRIDGEWATER, MA 02324

FEBRUARY 14, 2014
SCALE: 1"=20'
JOB NO. 13-894
LATEST REVISION: JUNE 20, 2014

EXISTING CONDITIONS

SHEET 2 OF 6

– ZONING DATA –

DISTRICT: MUB

– PARKING REQUIREMENT –

PRINCIPAL USE: AIRPLANE HANGER

REQUIREMENT	REQURIED	PROVIDED
1 SPACE/200 S.F. OFFICE; PLUS 1 SPACE/1,500 S.F. WAREHOUSE	12 SPACES	12 SPACES

GENERAL PLANTING NOTES

1. ALL PLANT MATERIAL SHALL CONFORM TO THE STANDARDS OF THE AMERICAN ASSOCIATION OF NURSERYMEN OR THE PLANT MATERIAL WILL BE UNACCEPTABLE. ALL PLANT MATERIAL SHALL BE TRUE TO SPECIES, VARIETY, SIZE AND BE CERTIFIED DISEASE AND INSECT FREE. THE OWNER AND/OR THE LANDSCAPE ARCHITECT RESERVES THE RIGHT TO APPROVE ALL PLANT MATERIAL ON SITE PRIOR TO INSTALLATION.
2. ALL PLANT MATERIAL SHALL BE PROPERLY GUYED, STAKED, WRAPPED, AND PLANTED IN CONFORMANCE WITH THE TYPICAL PLANTING DETAILS. GUY WIRES SHALL BE ATTACHED TO THE TREE AT A HEIGHT OF TWO–THIRDS THE HEIGHT OF THE TREE AND SHOULD BE LOCATED AT POINTS SO AS NOT TO SPLIT THE TRUNK OF MULTI–STEMMED TREES. PROVIDE THREE STAKES PER TREE UNLESS NOTED OTHERWISE INSTALL ALL PLANT MATERIAL ON UNDISTURBED GRADE. PROVIDE BURLAP WRAPPING WITH A 50% OVERLAP. CUT AND REMOVE BURLAP FROM TOP ONE–THIRD OF THE ROOT BALL.
3. PROVIDE PLANTING PITS AS INDICATED ON PLANTING DETAILS. BACKFILL PLANTING PITS WITH ONE PART EACH OF TOP SOIL, PEAT MOSS, AND PARENT MATERIAL. IF WET SOIL CONDITIONS EXIST THEN PLANTING PITS SHALL BE EXCAVATED AN ADDITIONAL 12" AND FILLED WITH SAND.
4. NEWLY INSTALLED PLANT MATERIAL SHALL BE WATERED AT THE TIME OF INSTALLATION AND SHALL BE SUBSEQUENTLY FLOODED TWICE WITHIN TWENTY–FOUR (24) HOURS OF PLANTING. REGULAR WATERING SHALL BE PROVIDED TO ENSURE THE ESTABLISHMENT, GROWTH AND SURVIVAL OF ALL PLANTS.
5. ALL PLANT MATERIAL SHALL BE GUARANTEED FOR ONE YEAR AFTER THE DATE OF FINAL ACCEPTANCE. ANY PLANT MATERIAL THAT DIES WITHIN THAT TIME PERIOD SHALL BE REMOVED, INCLUDING THE STUMP, AND REPLACED WITH MATERIAL OF SIMILAR SIZE AND SPECIES AT THE EXPENSE OF THE DEVELOPER. THE REPLACED PLANT MATERIAL SHALL BE GUARANTEED FOR ONE YEAR AFTER THE REPLACEMENT DATE.
6. THE LANDSCAPE CONTRACTOR SHALL PROVIDE A MINIMUM 4" LAYER OF TOPSOIL IN ALL LAWN AREAS AND A MINIMUM OF 6" OF TOPSOIL IN ALL PLANTING AREAS. A FULL SOIL ANALYSIS SHALL BE CONDUCTED AFTER CONSTRUCTION AND PRIOR TO PLANTING TO DETERMINE THE EXTENT OF SOIL AMENDMENT REQUIRED.
7. ALL DISTURBED LAWN AREAS SHALL BE STABILIZED WITH EITHER SOD OR SEED AS INDICATED ON THE LANDSCAPE PLANS. SEED SHALL CONSIST OF THE MIXTURE LISTED IN THE GENERAL SEEDING NOTES. ALL DISTURBED LAWN AREAS SHALL BE TOP SOILED, LIMED, FERTILIZED, AND FINE GRADED PRIOR TO LAWN INSTALLATION.
8. ALL PLANTING BEDS SHALL RECEIVE 3" OF SHREDDED PINE, CEDAR OR HEMLOCK BARK.
9. ALL SHRUB MASSES SHALL BE PLANTED IN CONTINUOUS MULCHED BEDS.
10. ALL TREES ARE TO BE GUYED, 3 EACH, UNLESS OTHERWISE NOTED ON PLAN.
11. ALL DECIDUOUS TREES ARE TO BE WRAPPED, WITH TREE WRAP, UP TO THE FIRST BRANCHING AND SECURED.
12. THE LANDSCAPE CONTRACTOR IS TO PERFORM ALL CONTRACTED WORK IN A REASONABLE PERIOD OF CONTINUOUS WORK.
13. THE LANDSCAPE CONTRACTOR IS TO MAINTAIN PLANT MATERIAL WHILE THE PROJECT IS UNDERWAY AND FOR A PERIOD OF TWO WEEKS AFTER THE COMPLETION OF THE PROJECT UNLESS OTHERWISE SPECIFIED.
14. THE CONTRACTOR IS TO CLEAN UP AND REMOVE ANY DEBRIS FROM THE SITE, CAUSED BY THE LANDSCAPE CONTRACTOR.

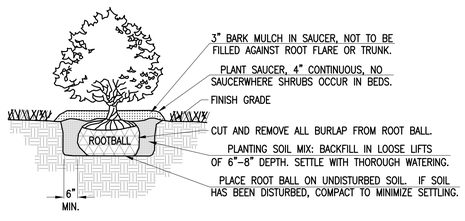

NOTES:
1. SHRUB SHALL BEAR SAME RELATIONSHIP TO FINISHED GRADE AS IT BORE TO NURSERY OR FIELD GRADE.
2. WHERE SHRUBS OCCUR IN GROUPINGS IN PLANT BEDS, PROVIDE 2' DEEP CONTINUOUS LOAM BED.

1/3 SHRUB PLANTING
NOT TO SCALE

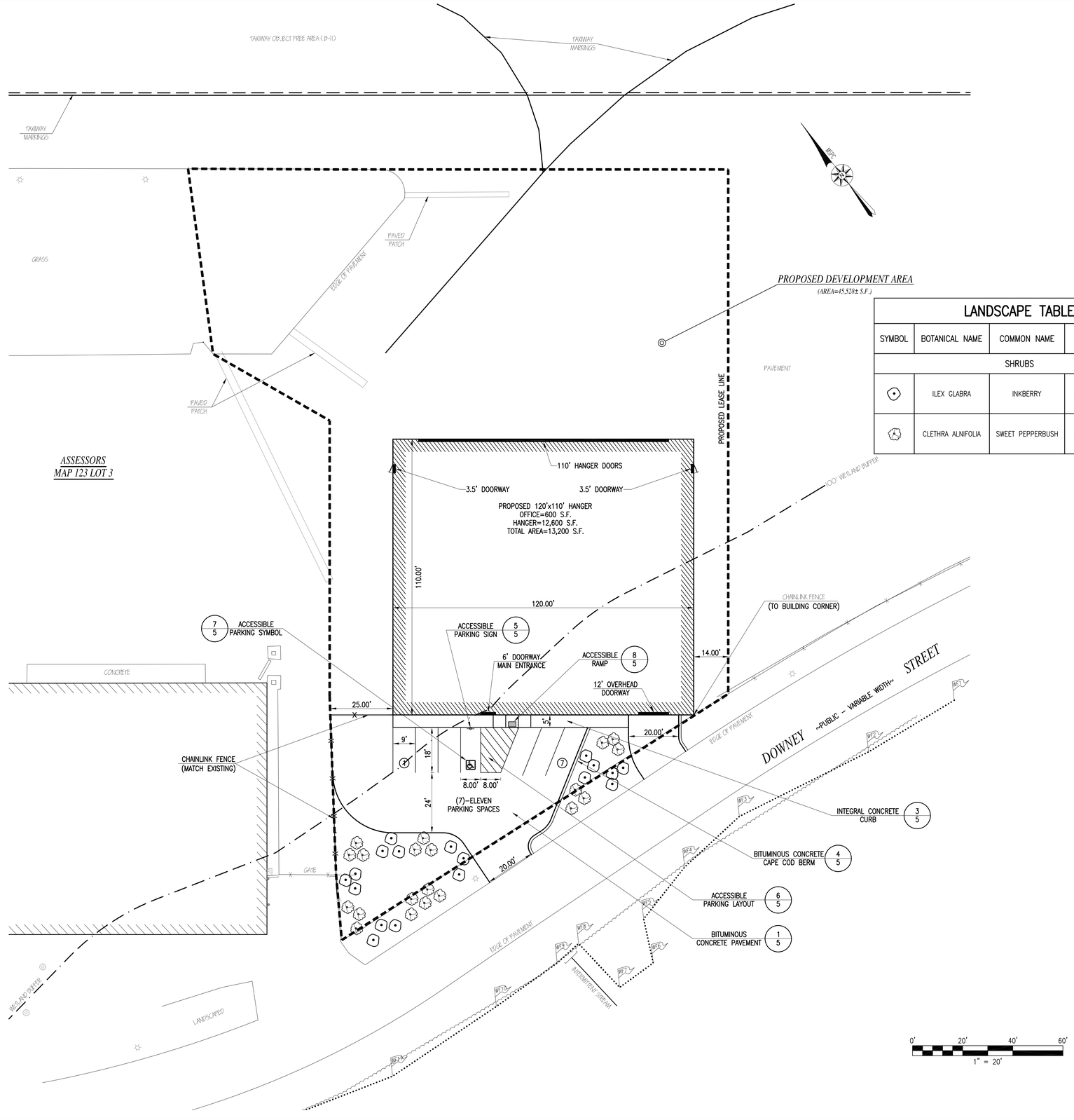

LANDSCAPE TABLE				
SYMBOL	BOTANICAL NAME	COMMON NAME	SIZE	QUANTITY
SHRUBS				
	ILEX GLABRA	INKBERRY	5 GALLON	18
	CLETHRA ALNIFOLIA	SWEET PEPPERBUSH	5 GALLON	20

REVISIONS

1	4/22/14	PER AIRPORT COMM.
2	5/29/14	PER CON COMM.
3	6/20/14	PER CON COMM.

COMMONWEALTH OF MASSACHUSETTS
CHRISTIAN ALBERT FARLAND
No. 47544
CIVIL

THOMPSONFARLAND
PROFESSIONAL ENGINEERS // LAND SURVEYORS
www.ThompsonFarland.com
(MAIN OFFICE) 398 COUNTY STREET, NEW BEDFORD, MA 02740 P.508.717.3479
NEW BEDFORD | TAUNTON | CAMBRIDGE | MARLBOROUGH

DRAWN BY: CKG
DESIGNED BY: CAF
CHECKED BY: CAF

SITE PLAN
DOWNEY STREET
ASSESSORS MAP 123 LOT 3
NEW BEDFORD, MASSACHUSETTS

PREPARED FOR: CLAREMONT COMPANIES
1 LAKESHORE CENTER
BRIDGEWATER, MA 02324

FEBRUARY 14, 2014
SCALE: 1"=20'
JOB NO. 13–894
LATEST REVISION: JUNE 20, 2014

LAYOUT & LANDSCAPING

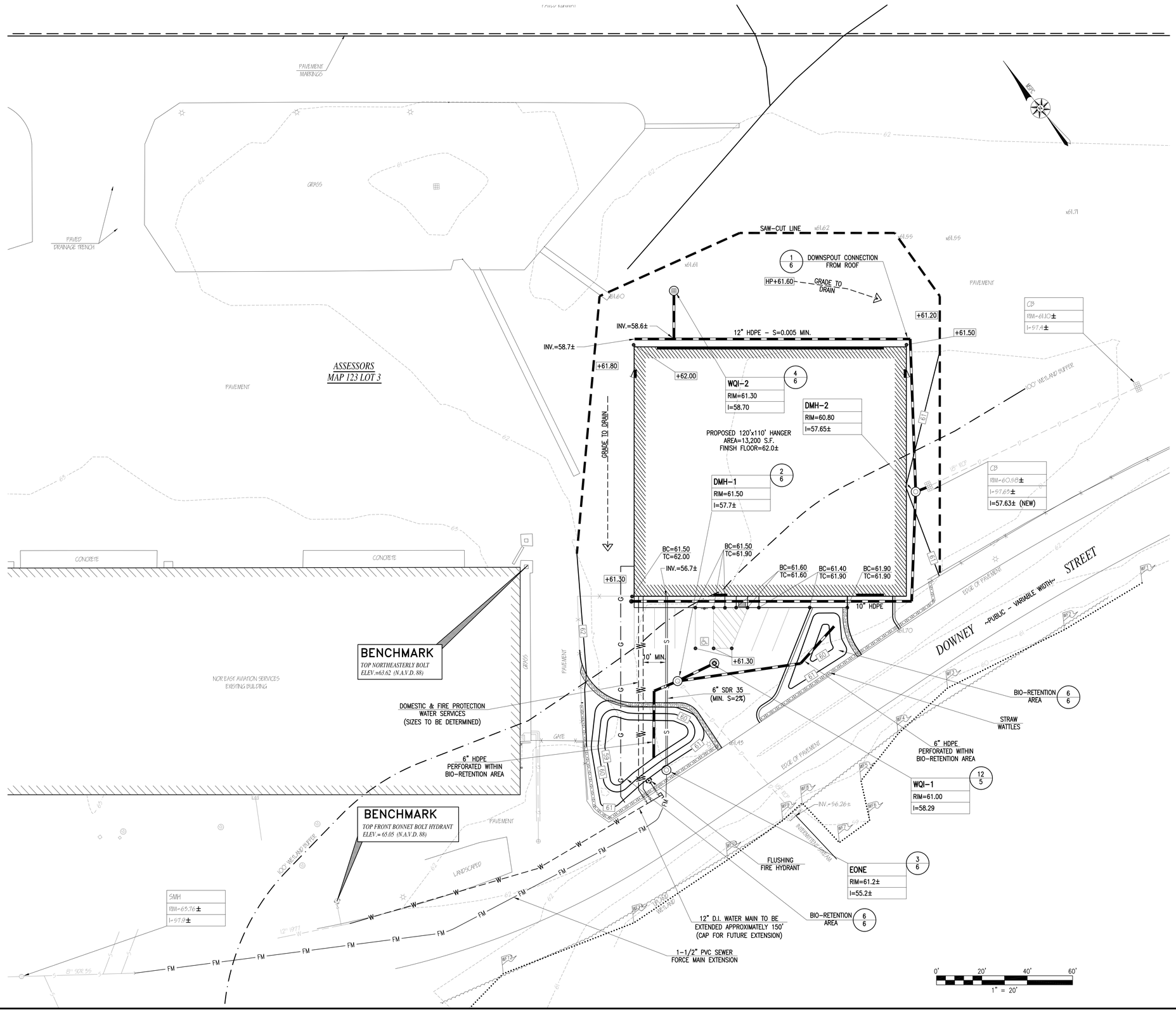

RECORD OWNER:
ASSESSORS MAP 123 LOT 3
CITY OF NEW BEDFORD
AIRPORT COMMISSION
131 WILLIAM STREET
NEW BEDFORD, MA 02740
DEED BOOK 1012 PAGE 22

REVISIONS

1	4/22/14	PER AIRPORT COMM.
2	5/29/14	PER CON COMM.
3	6/20/14	PER CON COMM.

COMMONWEALTH OF MASSACHUSETTS
CHRISTIAN ALBERT FARLAND
No. 47544
CIVIL
REGISTERED PROFESSIONAL ENGINEER

THOMPSONFARLAND
PROFESSIONAL ENGINEERS // LAND SURVEYORS
www.ThompsonFarland.com
(MAIN OFFICE) 398 COUNTY STREET, NEW BEDFORD, MA 02740 P.508.717.3479
NEW BEDFORD | TAUNTON | CAMBRIDGE | MARLBOROUGH

DRAWN BY: CKG

DESIGNED BY: CAF

CHECKED BY: CAF

SITE PLAN
DOWNEY STREET
ASSESSORS MAP 123 LOT 3
NEW BEDFORD, MASSACHUSETTS

PREPARED FOR: CLAREMONT COMPANIES
1 LAKESHORE CENTER
BRIDGEWATER, MA 02324

FEBRUARY 14, 2014

SCALE: 1"=20'

JOB NO. 13-894

LATEST REVISION:
JUNE 20, 2014

UTILITIES AND GRADING

SHEET 4 OF 6

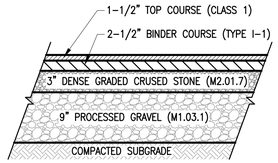

1/3 BITUMINOUS CONCRETE PAVEMENT

NOT TO SCALE

	A	B
CONCRETE WALK	4"	4"

NOTE:
UNLESS OTHERWISE NOTED ON PLANS, CONTRACTION JOINTS TO BE 5'-0" O.C. AND EXPANSION JOINTS TO BE 40'-0" O.C. MAX., OR AT BACK OF CURB, CHANGE OF DIRECTION, OTHER WALK, UTILITY APPURTENANCE, OR FACE OF STRUCTURE.

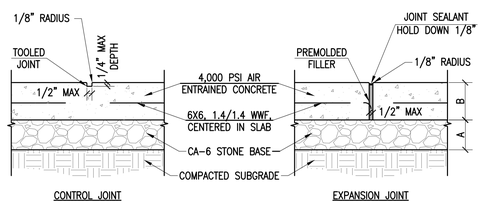

2/3 CONCRETE PAVEMENT DETAILS

NOT TO SCALE

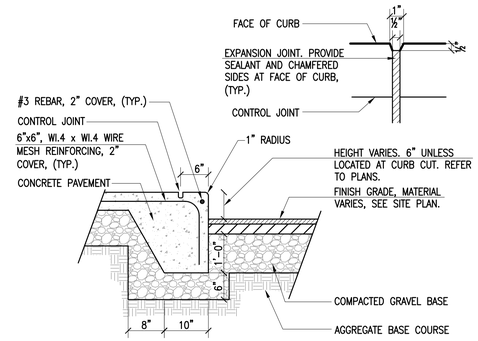

3/3 INTEGRAL CONCRETE CURB

NOT TO SCALE

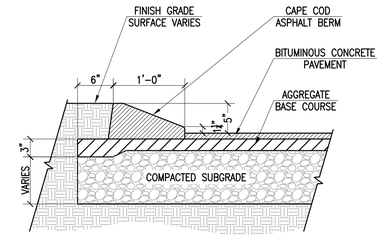

4/3 BITUMINIOUS CONCRETE CAPE COD BERM

NOT TO SCALE

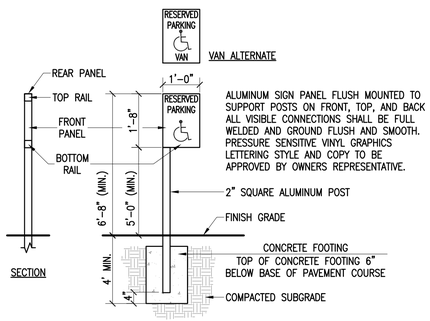

5/3 ACCESSIBLE PARKING SIGN

NOT TO SCALE

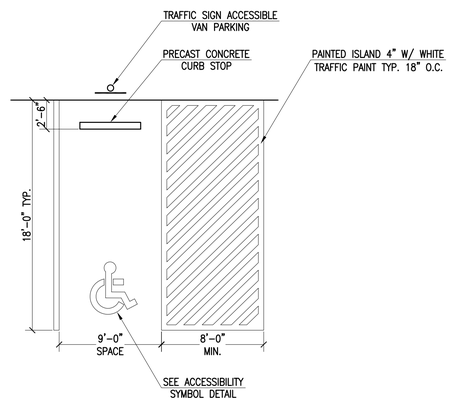

6/3 ACCESSIBLE PARKING LAYOUT

NOT TO SCALE

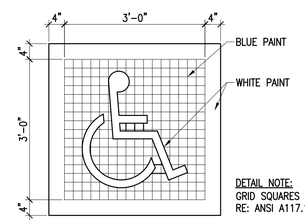

7/3 ACCESSIBLE PARKING SYMBOL

NOT TO SCALE

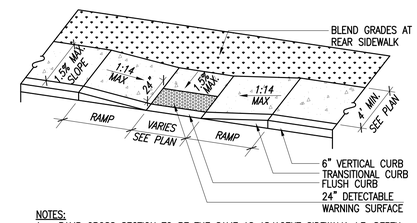

NOTES:
1. RAMP CROSS SECTION TO BE THE SAME AS ADJACENT SIDEWALK, I.E. DEPTH OF SURFACE AND FOUNDATION.
2. DIMENSIONS ARE SUBJECT TO CHANGE IN FIELD. ALL SLOPES AND DIMENSIONS TO COMPLY WITH ADA MAAB REQUIREMENTS.
3. PROVIDE EXPANSION JOINTS AT TOPS OF RAMP AND AT BACK OF WALK AT INTERFACE OF CURB.
4. PROVIDE HEAVY BROOM FINISH ON RAMP AND SIDE SLOPES PERPENDICULAR TO FLOW OF TRAFFIC.
5. MINIMUM WALK DIMENSIONS ARE FROM BACK OF CURB.
6. TRANSITION CURB LENGTH AS REQUIRED TO MEET CODE.
7. FIXED OBJECTS (I.E. UTILITY POLES, HYDRANTS, ETC.) MUST NOT ENCROACH ON ANY PART OF A WHEELCHAIR RAMP, INCLUDING TRANSITION SLOPES.
8. AT NO TIME IS ANY PART OF THE WHEELCHAIR RAMP, EXCLUDING CURB TRANSITIONS, TO BE LOCATED OUTSIDE OF THE CROSSWALK.

8/3 ACCESSIBLE RAMP

NOT TO SCALE

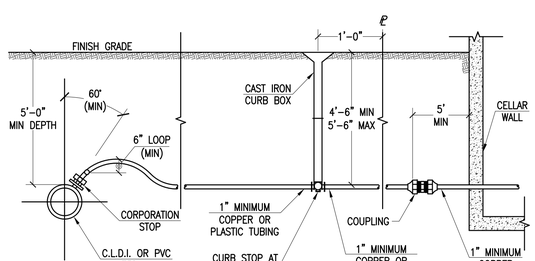

9/4 WATER SERVICE DETAIL

NOT TO SCALE

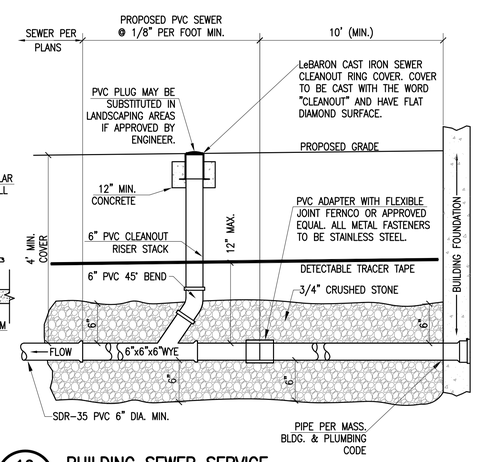

10/4 BUILDING SEWER SERVICE

NOT TO SCALE

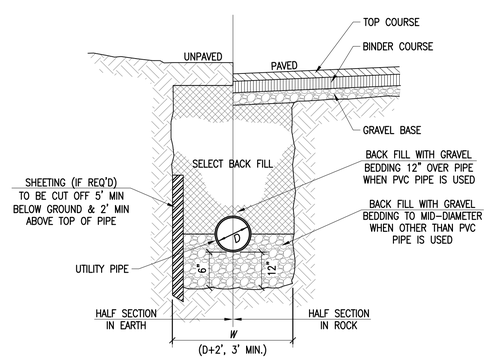

11/4 UTILITY TRENCH

NOT TO SCALE

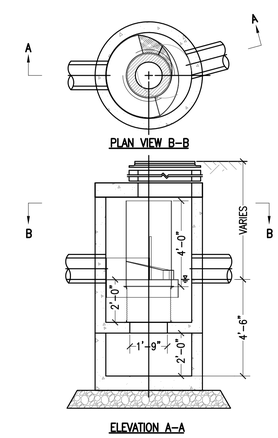

12/4 CONTECH CDS WATER QUALITY UNIT

NOT TO SCALE

REVISIONS

1	4/22/14	PER AIRPORT COMM.
2	5/29/14	PER CON COMM.
3	6/20/14	PER CON COMM.

THOMPSONFARLAND
PROFESSIONAL ENGINEERS // LAND SURVEYORS
www.ThompsonFarland.com
(MAIN OFFICE) 396 COUNTY STREET, NEW BEDFORD, MA 02740 P.508.717.3479
NEW BEDFORD | TAUNTON | CAMBRIDGE | MARLBOROUGH

DRAWN BY: CKG

DESIGNED BY: CAF

CHECKED BY: CAF

SITE PLAN
DOWNEY STREET
ASSESSORS MAP 123 LOT 3
NEW BEDFORD, MASSACHUSETTS

PREPARED FOR: CLAREMONT COMPANIES
1 LAKESHORE CENTER
BRIDGEWATER, MA 02324

FEBRUARY 14, 2014

SCALE: AS NOTED

JOB NO. 13-894

LATEST REVISION: JUNE 20, 2014

DETAILS

GENERAL CONSTRUCTION NOTES

1. THE CONTRACTOR IS SPECIFICALLY CAUTIONED THAT THE LOCATION AND/OR ELEVATION OF EXISTING UTILITIES AND STRUCTURES AS SHOWN ON THESE PLANS IS BASED ON RECORDS OF VARIOUS UTILITY COMPANIES AND WHERE POSSIBLE, MEASUREMENTS TAKEN IN THE FIELD. THIS INFORMATION IS NOT TO BE RELIED ON AS BEING EXACT OR COMPLETE. THE LOCATION OF ALL UNDERGROUND UTILITIES AND STRUCTURES SHALL BE VERIFIED IN THE FIELD BY THE CONTRACTOR PRIOR TO THE START OF CONSTRUCTION. THE CONTRACTOR MUST CONTACT THE APPROPRIATE UTILITY COMPANY, ANY GOVERNING PERMITTING AUTHORITY, AND "DIG SAFE" AT LEAST 72 HOURS PRIOR TO ANY EXCAVATION WORK TO REQUEST EXACT FIELD LOCATION OF UTILITIES INTERFERING WITH THE PROPOSED CONSTRUCTION AND APPROPRIATE REMEDIAL ACTION TAKEN BEFORE PROCEEDING WITH THE WORK. IT SHALL BE THE RESPONSIBILITY OF THE CONTRACTOR TO RELOCATE ALL EXISTING UTILITIES WHICH CONFLICT WITH THE PROPOSED IMPROVEMENTS SHOWN ON THE PLAN.
2. TOPOGRAPHIC AND PROPERTY LINE SURVEY PERFORMED BY THOMPSON FARLAND, INC. IN NOVEMBER OF 2013.
3. VERTICAL ELEVATIONS REFER TO THE NORTH AMERICAN VERTICAL DATUM (NAVD) OF 1988 AND HORIZONTAL LOCATIONS REFER TO THE NORTH AMERICAN DATUM (NAD) OF 1983.
4. ALL CONSTRUCTION SHALL BE IN ACCORDANCE WITH ALL APPLICABLE STATE AND LOCAL STANDARDS AND REGULATIONS.
5. THE CONTRACTOR SHALL BE RESPONSIBLE FOR ESTABLISHING AND MAINTAINING ALL CONTROL POINTS AND BENCH MARKS NECESSARY FOR THE WORK.
6. WHERE PROPOSED PAVEMENT AND WALKS ARE TO MEET EXISTING, THE CONTRACTOR SHALL SAWCUT A NEAT LINE AND MATCH GRADE. SEAL ALL JOINTS WITH HOT BITUMINOUS ASPHALT JOINT SEALER.
7. CURBING TO BE AS INDICATED ON THE PLANS.
8. ALL EXISTING TREES, SHRUBS AND GROUND COVER WHERE NATURAL GRADE IS TO BE RETAINED SHALL BE KEPT IN THEIR EXISTING STATE UNLESS REMOVAL IS REQUIRED FOR CONSTRUCTION PURPOSES.
9. ALL AREAS DISTURBED BY CONSTRUCTION AND NOT TO BE PAVED OR OTHERWISE TREATED AS NOTED ON PLAN SHALL BE TREATED WITH 4" OF LOAM, SEEDED AND HAY MULCHED FOR EROSION CONTROL.
10. SITE IMPROVEMENTS SHALL CONFORM TO A.D.A. SPECIFICATIONS.
11. LIGHTING SHALL BE DIRECTED ON SITE AND AWAY FROM TRAFFIC INTERFERENCE.
12. TEST PITS AND/OR BORINGS WERE TAKEN FOR THE PURPOSE OF DESIGN AND SHOW CONDITIONS AT BORING POINTS ONLY. THEY DO NOT NECESSARILY SHOW THE NATURE OF ALL MATERIALS TO BE ENCOUNTERED DURING CONSTRUCTION.
13. CONTRACTOR SHALL THOROUGHLY FAMILIARIZE THEMSELVES WITH ALL CONSTRUCTION DOCUMENTS, SPECIFICATIONS AND SITE CONDITIONS PRIOR TO BIDDING AND PRIOR TO CONSTRUCTION.
14. ANY DISCREPANCIES BETWEEN DRAWINGS, SPECIFICATIONS AND SITE CONDITIONS SHALL BE REPORTED IMMEDIATELY TO THE OWNER'S REPRESENTATIVE FOR CLARIFICATION AND RESOLUTION PRIOR TO BIDDING OR CONSTRUCTION.
15. THESE PLANS ARE PERMITTING PLANS AND SHALL NOT TO BE USED FOR CONSTRUCTION. A FINAL SET OF STAMPED PLANS FOR CONSTRUCTION WILL BE ISSUED AFTER RECEIVING FINAL APPROVAL FROM THE LOCAL AND/OR STATE DEPARTMENTS.

CONSTRUCTION SEQUENCING NOTES

1. CONSTRUCT TEMPORARY AND PERMANENT EROSION CONTROL FACILITIES. EROSION CONTROL FACILITIES SHALL BE INSTALLED PRIOR TO ANY EARTH MOVING.
2. CLEAR CUT, DEMOLISH AND DISPOSE OF EXISTING SITE ELEMENTS NOT TO REMAIN.
3. GRADE AND GRAVEL ALL PAVED AREAS. ALL PROPOSED PAVED AREAS SHALL BE STABILIZED IMMEDIATELY AFTER GRADING.
4. BEGIN ALL PERMANENT AND TEMPORARY SEEDING AND MULCHING. ALL CUT AND FILL SLOPES SHALL BE SEEDED AND MULCHED IMMEDIATELY AFTER THEIR CONSTRUCTION.
5. FINISH PAVING ALL HARD SURFACE AREAS.
6. INSPECT AND MAINTAIN ALL EROSION AND SEDIMENT CONTROL MEASURES.
7. COMPLETE PERMANENT SEEDING AND LANDSCAPING.
8. REMOVE TEMPORARY EROSION CONTROL MEASURES.
9. THE CONSTRUCTION SEQUENCE SHALL BE CONFINED TO THE LIMIT OF WORK AS SHOWN ON THE DRAWINGS.
10. UPON COMPLETION OF CONSTRUCTION THE OWNER SHALL AGREE TO MAINTAIN AND CLEAN ALL DRAINAGE STRUCTURES AS REQUIRED.

SITE PREPARATION NOTES

1. WITHIN THE LIMIT OF WORK LINE AS NOTED ON THE SITE PLANS, REMOVE AND DISCARD ALL CONCRETE PAVEMENT, BITUMINOUS CONCRETE PAVEMENT, BRICK PAVEMENT, TOP SOIL, MULCH, TRASH, DEAD TREES AND STUMPS, SHRUBBERY, CHAIN LINK FENCE POSTS, RAILS, FABRIC, GATES, FOOTINGS AND ALL APPURTENANCES, BOLLARDS, POSTS, CONCRETE FOOTINGS AND FOUNDATIONS, WALLS AND CURBS UNLESS OTHERWISE NOTED.
2. THE OWNER'S REPRESENTATIVE SHALL BE CONSULTED AND WILL REVIEW THE WORK ON SITE WITH THE CONTRACTOR BEFORE ANY WORK SHALL COMMENCE.
3. THE CONTRACTOR SHALL VERIFY ALL EXISTING CONDITIONS IN THE FIELD AND REPORT ANY DISCREPANCIES BETWEEN PLANS AND ACTUAL CONDITIONS TO THE OWNER'S REPRESENTATIVE PRIOR TO STARTING WORK.
4. THE CONTRACTOR IS RESPONSIBLE FOR ANY DAMAGE TO EXISTING CONDITIONS TO REMAIN THAT ARE DUE TO CONTRACTOR OPERATIONS.
5. ALL ITEMS TO BE REMOVED THAT ARE NOT STOCKPILED FOR LATER REUSE ON THE PROJECT OR DELIVERED TO THE OWNER SHALL BE LEGALLY DISPOSED OF OFF SITE BY THE CONTRACTOR.
6. THE CONTRACTOR SHALL BE RESPONSIBLE FOR COORDINATING HIS EFFORTS OF THE DEMOLITION WITH ALL TRADES.
7. THE CONTRACTOR SHALL COORDINATE ALL ADJUSTMENT OR ABANDONMENT OF UTILITIES WITH THE RESPECTIVE UTILITY COMPANY.
8. THE CONTRACTOR SHALL MAINTAIN OR ADJUST TO NEW FINISH GRADES AS NECESSARY ALL UTILITY AND SITE STRUCTURES SUCH AS LIGHT POLES, SIGN POLES, MANHOLES, CATCH BASINS, HAND HOLES, WATER AND GAS GATES, HYDRANTS, ETC., FROM MAINTAINED UTILITY AND SITE SYSTEMS UNLESS OTHERWISE NOTED OR DIRECTED BY THE OWNER'S REPRESENTATIVE.

UTILITY AND GRADING NOTES

1. ALL ON-SITE STORM DRAINAGE PIPES SHALL BE HIGH DENSITY POLYETHYLENE PIPE (HDPE) OR RCP, UNLESS NOTED OTHERWISE.
2. HDPE PIPE SHALL CONFORM WITH AASHTO DESIGNATIONS M294 AND M252, SHALL BE MANUFACTURED WITH HIGH DENSITY POLYETHYLENE PLASTIC AND SHALL BE ADS N-12 PIPE AS MANUFACTURED BY ADVANCE DRAINAGE SYSTEM, INC. OR HANCOR HI Q PIPE AS MANUFACTURED BY HANCOR, INC. OR APPROVED EQUAL UNLESS OTHERWISE NOTED OR DETAILED.
3. A MINIMUM OF 18" VERTICAL CLEARANCE SHALL BE MAINTAINED WHERE WATER SERVICES CROSS STORM DRAIN LINES.
4. ALL SERVICE CONNECTIONS SHALL BE INSTALLED TO A POINT OF 10 FEET FROM THE BUILDING WALL UNLESS OTHERWISE NOTED OR DETAILED.
5. ALL WATER MAINS SHALL BE INSTALLED WITH A MINIMUM OF 5 FEET OF COVER AND A MAXIMUM OF 6 FEET OF COVER EXCEPT AS NOTED OR DETAILED OTHERWISE. GREATER DEPTHS ARE PERMITTED WHERE REQUIRED TO AVOID CONFLICTS WITH OTHER UTILITIES.
6. GENERALLY, WATER MAIN FITTINGS IDENTIFIED ON THIS DRAWING ARE SHOWN FOR INSTALLATION LOCATION PURPOSE. THE CONTRACTOR SHALL NOTE THAT NOT ALL FITTINGS ARE NOTED, SHOWN OR INDICATED.
7. ALL WATER MAIN FITTINGS, TEES, BENDS, HYDRANTS, ETC. SHALL BE RESTRAINED WITH CONCRETE THRUST BLOCKS.
8. DOMESTIC WATER SERVICES 2.5" AND SMALLER SHALL BE TYPE K COPPER TUBING AND SHALL BE INSTALLED WITH APPROPRIATELY SIZED CORPORATION STOP AND APPROVED SADDLE CURB STOP, AND BOX, USING MATERIALS SPECIFIED BY THE MUNICIPAL WATER DEPARTMENT OR COMPANY.
9. ALL WATER MAINS 3" AND LARGER SHALL BE CEMENT LINED DUCTILE IRON - CLASS 52, AND SHALL BE INSTALLED WITH APPROPRIATELY SIZED FITTINGS AND GATE VALVES.
10. ALL WATER MAIN APPURTENANCES, MATERIALS, METHODS OF INSTALLATION AND TESTING REQUIREMENTS SHALL MEET OR EXCEED ALL LOCAL MUNICIPAL REQUIREMENTS.
11. PRESSURE AND LEAKAGE TEST, DISINFECTION AND FLUSHING SHALL BE IN ACCORDANCE WITH ALL LOCAL MUNICIPAL STANDARDS AND REQUIREMENTS. CONTRACTORS SHALL BE RESPONSIBLE FOR ALL COSTS IN CONNECTION WITH UTILITY TESTS, FLUSHING AND INSPECTIONS AS REQUIRED BY THE LOCAL MUNICIPALITY.
12. PRIMARY WATER METER AND BACKFLOW PREVENTER SHALL BE LOCATED AT THE POINT WHERE THE WATER LINE ENTERS THE BUILDING UNLESS OTHERWISE NOTED OR DETAILED ON THE DRAWINGS.
13. ALL GRAVITY SEWER PIPE SHALL BE PVC PER ASTM D3034, SDR-35 AND ASTM D1784 WITH RUBBER GASKET JOINTS.
14. WHERE SANITARY SEWERS CROSS WATER LINES, THE SEWER SHALL BE LAID AT SUCH AN ELEVATION THAT THE CROWN OF THE SEWER IS AT LEAST EIGHTEEN INCHES BELOW THE INVERT OF THE WATER MAIN. IF THE ELEVATION OF THE SEWER CANNOT BE VARIED TO MEET THIS REQUIREMENT, THE WATER MAIN SHALL BE RELOCATED TO PROVIDE THIS SEPARATION OR CONSTRUCTED WITH MECHANICAL JOINT PIPE FOR A DISTANCE OF TEN FEET ON EACH SIDE OF THE SEWER. ONE FULL LENGTH OF WATER MAIN SHALL BE CENTERED OVER THE SEWER SO THAT BOTH JOINTS WILL BE AS FAR AS THE SEWER AS POSSIBLE. IF MECHANICAL JOINT PIPE IS NOT USED THAN BOTH THE WATER MAIN AND SANITARY SEWER SHALL BE ENCASED IN CONCRETE FOR A MINIMUM DISTANCE OF 10 FEET FROM THE CROSSING POINT OF THE OTHER PIPE AS MEASURED NORMALLY FROM ALL POINTS ALONG THE PIPE.
15. DUE TO THE SMALL SCALE OF THE SITE WORK DRAWINGS, EXACT LOCATION OF UTILITY STUBS FOR BUILDING CONNECTIONS SHALL BE VERIFIED WITH THE BUILDING DRAWINGS. SERVICE STUBS TO THE BUILDING SHALL BE INSTALLED TO A POINT 10 FEET FROM THE BUILDING WALL UNLESS OTHERWISE NOTED OR DETAILED.
16. WHERE PROPOSED GRADES MEET EXISTING GRADES, CONTRACTOR SHALL BLEND GRADES TO PROVIDE A SMOOTH TRANSITION BETWEEN EXISTING AND NEW WORK. PONDING AT TRANSITION AREAS WILL NOT BE ALLOWED.
17. CONTRACTOR SHALL MAINTAIN POSITIVE DRAINAGE AWAY FROM ALL BUILDING FOUNDATIONS AND STRUCTURES.
18. MAXIMUM SLOPE IN DISTURBED AREAS SHALL NOT EXCEED 3:1 , UNLESS OTHERWISE NOTED.
19. CONTRACTOR SHALL VERIFY EXISTING GRADES AND NOTIFY OWNER'S REPRESENTATIVE OF ANY DISCREPANCIES.
20. CONTRACTOR SHALL ADJUST UTILITY ELEMENT MEANT TO BE FLUSH WITH GRADE THAT IS AFFECTED BY SITE WORK OR GRADE CHANGES, WHETHER SPECIFICALLY NOTED ON PLANS OR NOT.
21. WHERE AN EXISTING UTILITY IS FOUND TO CONFLICT WITH THE PROPOSED WORK, THE LOCATION, ELEVATION AND SIZE OF THE UTILITY SHALL BE ACCURATELY DETERMINED WITHOUT DELAY BY THE CONTRACTOR, AND THE INFORMATION FURNISHED TO THE OWNER'S REPRESENTATIVE FOR RESOLUTION OF THE CONFLICT.
22. THE CONTRACTOR SHALL MAKE ALL ARRANGEMENTS FOR THE ALTERATION AND ADJUSTMENT OF ALL GAS, ELECTRIC, TELEPHONE AND ANY OTHER PRIVATE UTILITIES BY THE UTILITY COMPANIES.
23. ELECTRICAL DUCT BANK LOCATION IS SHOWN FOR COORDINATION PURPOSES, REFER TO ELECTRICAL PLANS FOR SECTIONS AND DETAILS OF THE UTILITY DUCT BANK.
24. THE LOCATION, SIZE, DEPTH AND SPECIFICATIONS FOR CONSTRUCTION OF PRIVATE UTILITY SERVICES SHALL BE INSTALLED ACCORDING TO THE REQUIREMENTS PROVIDED BY AND APPROVED BY THE RESPECTIVE UTILITY COMPANY (GAS, TELEPHONE AND ELECTRICAL). FINAL DESIGN AND LOCATIONS AT THE BUILDING WILL BE PROVIDED BY THE ARCHITECT. THE CONTRACTOR SHALL COORDINATE THE INSTALLATION OF THE UTILITY CONNECTIONS WITH THE RESPECTIVE COMPANIES PRIOR TO ANY UTILITY CONSTRUCTION.

LAYOUT AND MATERIAL NOTES

1. CONTRACTOR SHALL THOROUGHLY FAMILIARIZE THEMSELVES WITH ALL CONSTRUCTION DOCUMENTS, SPECIFICATIONS AND SITE CONDITIONS PRIOR TO BIDDING AND PRIOR TO CONSTRUCTION.
2. ANY DISCREPANCIES BETWEEN DRAWINGS, SPECIFICATIONS AND SITE CONDITIONS SHALL BE REPORTED IMMEDIATELY TO THE OWNER'S REPRESENTATIVE FOR CLARIFICATION AND RESOLUTION PRIOR TO BIDDING OR CONSTRUCTION.
3. SEE ARCHITECTURAL DRAWINGS FOR EXACT BUILDING DIMENSIONS AND ALL DETAILS CONTIGUOUS TO THE BUILDING INCLUDING SIDEWALKS, RAMPS, UTILITY ENTRANCE LOCATIONS, WALL PACKS, CONCRETE DOOR PADS, ROOF DRAINS, ETC.
4. ACCESSIBLE CURB RAMPS SHALL BE PER THE MASSACHUSETTS ARCHITECTURAL ACCESS BOARD AND THE AMERICANS WITH DISABILITIES ACT ACCESSIBLITY GUIDELINES, WHICHER IS MORE STRINGENT.
5. THE FOLLOWING LAYOUT CRITERIA SHALL CONTROL UNLESS OTHERWISE NOTED ON THE PLAN:
   ALL DIMENSIONS ARE TO OUTSIDE FACE OF BUILDING.
   ALL DIMENSIONS ARE TO FACE OF CURB AT GUTTER LINE.
   ALL DIMENSIONS ARE TO CENTER OF PAVEMENT MARKINGS.
   ALL TIES TO PROPERTY LINES ARE PERPENDICULAR TO THE PROPERTY LINE UNLESS OTHERWISE NOTED.

SOIL EROSION AND SEDIMENT CONTROL NOTES

1. THE CONSERVATION COMMISSION SHALL BE NOTIFIED, AT LEAST 72 HOURS PRIOR TO ANY LAND DISTURBANCE.
2. A COPY OF THE SOIL EROSION AND SEDIMENT CONTROL PLAN MUST BE MAINTAINED ON THE PROJECT SITE DURING CONSTRUCTION.
3. SOIL EROSION AND SEDIMENT CONTROL PRACTICES IN THE PLAN SHALL BE CONSTRUCTED IN ACCORDANCE WITH THE PLANS AND SPECIFICATIONS.
4. ALL APPLICABLE SOIL EROSION AND SEDIMENT CONTROL PRACTICES SHALL BE IN PLACE PRIOR TO ANY DEMOLITION GRADING OPERATIONS AND/OR INSTALLATION OF PROPOSED STRUCTURES OR UTILITIES.
5. ALL APPLICABLE SOIL EROSION AND SEDIMENT CONTROL PRACTICES SHALL BE LEFT IN PLACE UNTIL CONSTRUCTION IS COMPLETED AND/OR THE AREA IS STABILIZED.
6. ALL SOIL EROSION AND SEDIMENT CONTROL STRUCTURES SHALL BE INSPECTED AND MAINTAINED ON A REGULAR BASIS AND AFTER EVERY STORM EVENT.
7. THE MAINTENANCE OF SOIL EROSION AND SEDIMENT CONTROL MEASURES AND FACILITIES DURING AND IMMEDIATELY AFTER CONSTRUCTION RESTS WITH THE GENERAL CONTRACTOR. UPON ACCEPTANCE OF THE PROJECT, THE OWNER SHALL BECOME RESPONSIBLE FOR MAINTENANCE OF ANY REMAINING MEASURES AND FACILITIES.
8. OFF SITE SEDIMENT DISTURBANCE MAY REQUIRE ADDITIONAL CONTROL MEASURES TO BE DETERMINED BY THE ENGINEER.
9. THE CONSERVATION COMMISSION AND/OR ENGINEER MAY REQUIRE ADDITIONAL SOIL EROSION MEASURES TO BE INSTALLED, AS DIRECTED BY THE DISTRICT INSPECTOR.
10. ADJOINING PROPERTIES SHALL BE PROTECTED FROM EXCAVATION AND FILLING OPERATIONS AT ALL TIMES.
11. THE CONTRACTOR SHALL UTILIZE ALL METHODS NECESSARY TO PREVENT BLOWING AND MOVEMENT OF DUST FROM THE EXPOSED SOIL SURFACES.
12. PAVED ROADWAYS MUST BE KEPT CLEAN AT ALL TIMES.
13. A CRUSHED STONE TIRE CLEANING PAD WILL BE INSTALLED WHEREVER A CONSTRUCTION ENTRANCE EXISTS. SEE LOCATION DETAIL ON PLAN.
14. ALL CATCH BASIN INLETS SHALL BE PROTECTED DURING CONSTRUCTION AS DETAILED ON THE PLAN, IF APPLICABLE.
15. ALL STORM DRAINAGE OUTLETS SHALL BE PROTECTED AS REQUIRED HEREON BEFORE DISCHARGE POINTS BECOME OPERATIONAL.
16. THE SITE SHALL AT ALL TIMES BE GRADED AND MAINTAINED SUCH THAT ALL STORMWATER RUNOFF IS DIVERTED TO SOIL EROSION AND SEDIMENT CONTROL FACILITIES.
17. LAND AREAS EXPOSED AT ANY ONE TIME AND THE LENGTH OF EXPOSURE SHALL BE KEPT TO A PRACTICAL MINIMUM. THEY SHALL BE LEFT IN A NEAT AND FINISHED APPEARANCE AND PROTECTED FROM EROSION.
18. ANY DISTURBED AREA THAT WILL BE LEFT EXPOSED FOR MORE THAN SIXTY (60) DAYS AND NOT SUBJECT TO CONSTRUCTION TRAFFIC SHALL IMMEDIATELY RECEIVE A TEMPORARY SEEDING AND FERTILIZATION. IF THE SEASON PROHIBITS TEMPORARY SEEDING, THE DISTRIBUTED AREAS SHALL BE MULCHED.
19. ALL CRITICAL AREAS SUBJECT TO EROSION SHALL RECEIVE A TEMPORARY SEEDING AND BE MULCHED IN ACCORDANCE WITH THE SPECIFICATIONS IMMEDIATELY FOLLOWING ROUGH GRADING.
20. IMMEDIATELY AFTER COMPLETION OF STRIPPING AND STOCKPILING OF TOPSOIL, SEED THE STOCKPILE WITH ANNUAL RYE GRASS. STABILIZE TOPSOIL STOCKPILES WITH STRAW MULCH FOR PROTECTION IF THE SEASON DOES NOT PERMIT THE APPLICATION AND ESTABLISHMENT OF TEMPORARY SEEDING.
21. SOIL STOCKPILES ARE NOT TO BE LOCATED WITHIN FIFTY (50) FEET OF WETLANDS, THE FLOODPLAIN, SLOPE, ROADWAY OR DRAINAGE FACILITIES. THE BASE OF ALL STOCKPILES SHALL BE PROTECTED BY A HAY BALE BARRIER OR SEDIMENT FENCE. LOCATIONS ARE DELINEATED ON THE PLAN.
22. MAXIMUM SIDE SLOPES OF ALL EXPOSED SURFACES SHALL NOT BE CONSTRUCTED STEEPER THAN 3:1 UNLESS OTHERWISE APPROVED BY THE DISTRICT.
23. ALL AREAS NOT STABILIZED BY CONSTRUCTION, SODDING OR LANDSCAPING SHALL BE SEEDED AND STABILIZED IN ACCORDANCE WITH THE SEEDING AND MULCHING SPECIFICATIONS.
24. MULCHING IS REQUIRED ON ALL SEEDED AREAS TO INSURE AGAINST EROSION BEFORE GRASS IS ESTABLISHED TO PROMOTE EARLIER VEGETATIVE COVER.
25. ALL DEWATERING OPERATIONS MUST DISCHARGE DIRECTLY INTO A SEDIMENT FILTRATION DEVICE. THE SEDIMENT FILTER MUST BE CAPABLE OF FILTERING THE SEDIMENT AND BE PLACED SO AS NOT TO CAUSE EROSION OF THE DOWNSTREAM AREA.

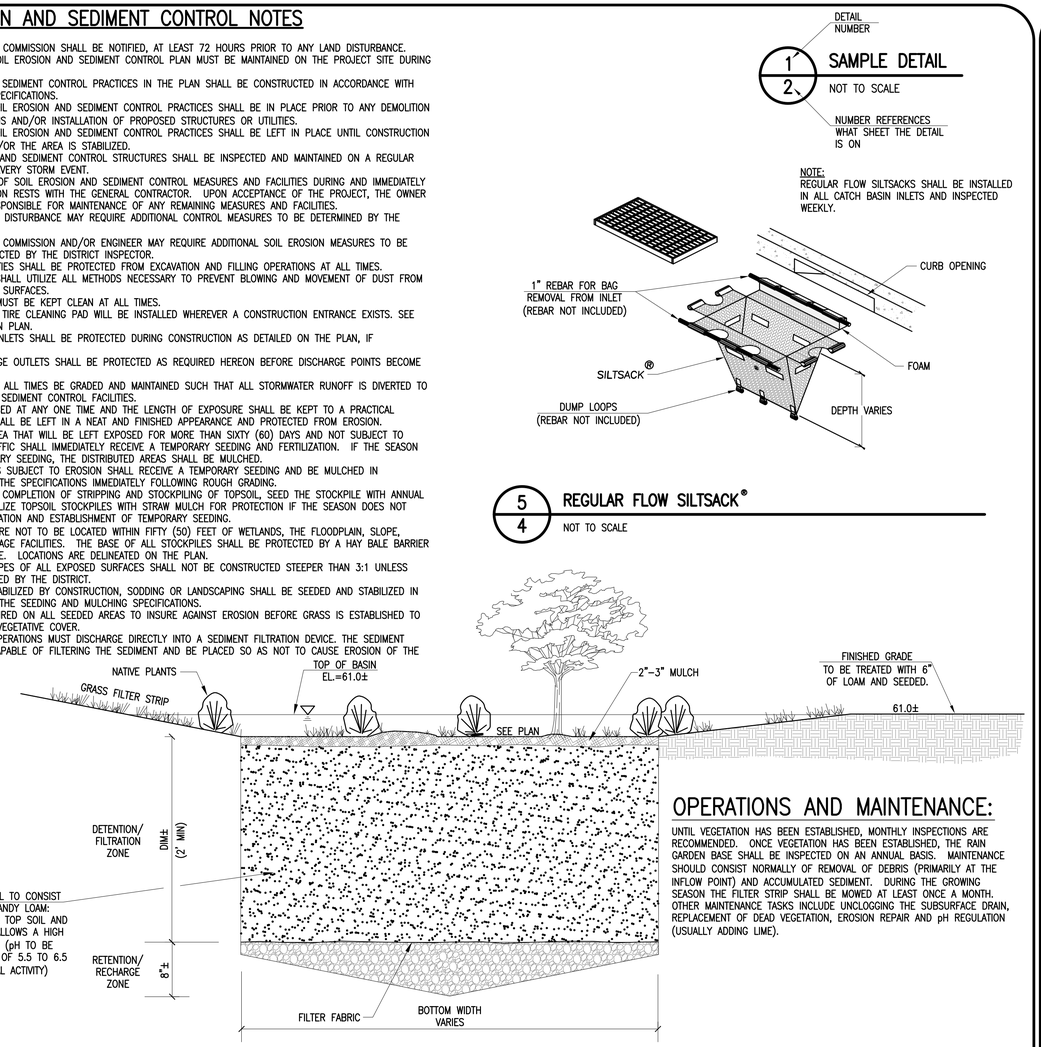

OPERATIONS AND MAINTENANCE:

UNTIL VEGETATION HAS BEEN ESTABLISHED, MONTHLY INSPECTIONS ARE RECOMMENDED. ONCE VEGETATION HAS BEEN ESTABLISHED, THE RAIN GARDEN BASE SHALL BE INSPECTED ON AN ANNUAL BASIS. MAINTENANCE SHOULD CONSIST NORMALLY OF REMOVAL OF DEBRIS (PRIMARILY AT THE INFLOW POINT) AND ACCUMULATED SEDIMENT. DURING THE GROWING SEASON THE FILTER STRIP SHALL BE MOWED AT LEAST ONCE A MONTH. OTHER MAINTENANCE TASKS INCLUDE UNCLOGGING THE SUBSURFACE DRAIN, REPLACEMENT OF DEAD VEGETATION, EROSION REPAIR AND pH REGULATION (USUALLY ADDING LIME).

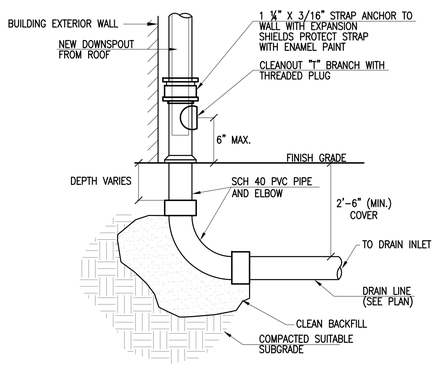

1/4 DOWNSPOUT CONNECTION FROM ROOF
NOT TO SCALE

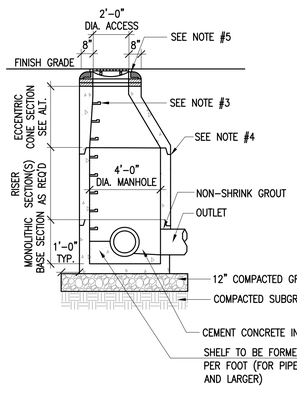

NOTES:
1. ALL SECTIONS SHALL BE DESIGNED FOR HS-20 LOADING.
2. PROVIDE "V" KNOCKOUTS FOR PIPES WITH 1" MAX. CLEARANCE TO OUTSIDE OF PIPE. MORTAR ALL PIPE CONNECTIONS.
3. COPOLYMER MANHOLE STEPS SHALL BE INSTALLED AT 12" O.C. FOR THE FULL DEPTH OF THE STRUCTURE
4. JOINT SEALANT BETWEEN PRECAST SECTIONS SHALL BE PREFORMED BUTYL RUBBER.
5. DRAIN MANHOLE FRAME SHALL BE SET IN FULL MORTAR BED. ADJUST TO GRADE WITH CLAY BRICK AND MORTAR. (2 BRICK COURSES MIN. 5 BRICK COURSES MAX.)

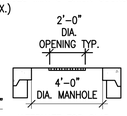

ALTERNATE TOP SLAB (STEEL REINFORCED FOR HS-20 LOADING)

2/4 DRAIN MANHOLE
NOT TO SCALE

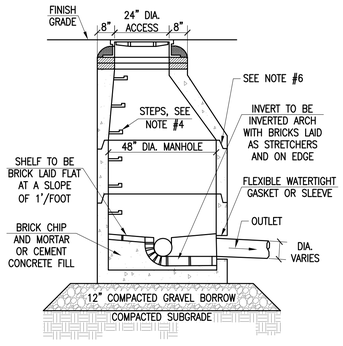

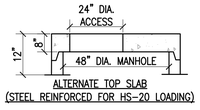

ALTERNATE TOP SLAB (STEEL REINFORCED FOR HS-20 LOADING)

NOTES:
1. BASE SECTION SHALL BE MONOLITHIC WITH A 48" INSIDE DIAMETER.
2. ALL SECTIONS SHALL BE DESIGNED FOR HS-20 LOADING.
3. CONCRETE SHALL BE COMPRESSIVE STRENGTH 4000 PSI TYPE II CEMENT.
4. COPOLYMER MANHOLE STEPS SHALL BE INSTALLED AT 12" O.C. FOR THE FULL DEPTH OF THE STRUCTURE.
5. ALL EXTERIOR SURFACES SHALL BE GIVEN TWO COATS OF BITUMINOUS WATER PROOFING MATERIAL.
6. JOINT SEALANT BETWEEN PRECAST SECTIONS SHALL BE PREFORMED BUTYL RUBBER.
7. STANDARD SEWER MANHOLE FRAME SHALL BE SET IN FULL MORTAR BED. ADJUST TO GRADE WITH CLAY BRICK AND MORTAR (2 BRICK COURSES TYPICALLY, 5 BRICK COURSES MAX.)

3/4 SANITARY SEWER MANHOLE
NOT TO SCALE

NOTES:
1. ALL SECTIONS SHALL BE DESIGNED FOR HS-20 LOADING.
2. PROVIDE "V" KNOCKOUTS FOR PIPES WITH 1" MAX. CLEARANCE TO OUTSIDE OF PIPE. MORTAR ALL PIPE CONNECTIONS.
3. JOINT SEALANT BETWEEN PRECAST SECTIONS SHALL BE PREFORMED BUTYL RUBBER.
4. CATCH BASIN FRAME SHALL BE SET IN FULL MORTAR BED. ADJUST TO GRADE WITH CLAY BRICK AND MORTAR. (2 BRICK COURSES MIN. 5 BRICK COURSES MAX.)
5. FRAME AND GRATE TO BE EQUAL TO LEBARON LK 120 (3 FLANGE) OR LK 121 (4 FLANGE) WITH SG-1 GRATE. DOUBLE FRAME AND GRATE SHALL BE LEBARON TYPE R-3531 B OR APPROVED EQUAL BY THE ENGINEER.

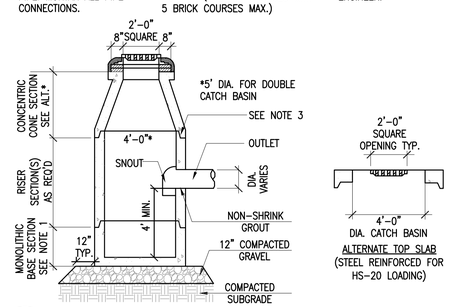

ALTERNATE TOP SLAB (STEEL REINFORCED FOR HS-20 LOADING)

4/4 CATCH BASIN
NOT TO SCALE

REVISIONS

1	4/22/14	PER AIRPORT COMM.
2	5/29/14	PER CON COMM.
3	6/20/14	PER CON COMM.

THOMPSONFARLAND
PROFESSIONAL ENGINEERS // LAND SURVEYORS
www.ThompsonFarland.com
(MAIN OFFICE) 390 COUNTY STREET, NEW BEDFORD, MA 02740 P.508.717.3479
NEW BEDFORD | TAUNTON | CAMBRIDGE | MARLBOROUGH

DRAWN BY: CKG
DESIGNED BY: CAF
CHECKED BY: CAF

SITE PLAN
DOWNEY STREET
ASSESSORS MAP 123 LOT 3
NEW BEDFORD, MASSACHUSETTS

PREPARED FOR: CLAREMONT COMPANIES
1 LAKESHORE CENTER
BRIDGEWATER, MA 02324

FEBRUARY 14, 2014
SCALE: AS NOTED
JOB NO. 13-894
LATEST REVISION: JUNE 20, 2014

DETAILS & NOTES

SHEET 6 OF 6