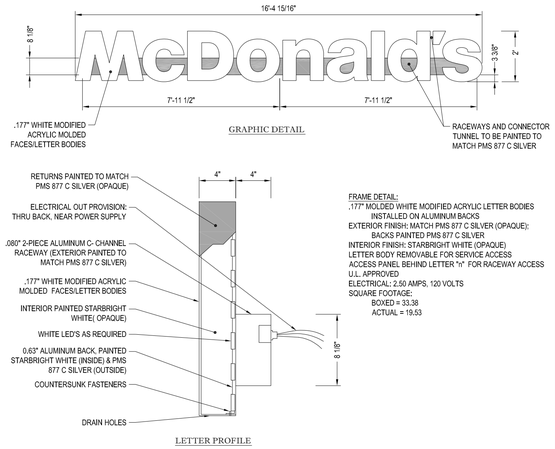

FRAME DETAIL:
.177" MOLDED WHITE MODIFIED ACRYLIC LETTER BODIES INSTALLED ON ALUMINUM BACKS
EXTERIOR FINISH: MATCH PMS 877 C SILVER (OPAQUE); BACKS PAINTED PMS 877 C SILVER
INTERIOR FINISH: STARBRIGHT WHITE (OPAQUE)
LETTER BODY REMOVABLE FOR SERVICE ACCESS
ACCESS PANEL BEHIND LETTER "n" FOR RACEWAY ACCESS
U.L. APPROVED
ELECTRICAL: 2.50 AMPS, 120 VOLTS
SQUARE FOOTAGE:
BOXED = 33.38
ACTUAL = 19.53

MCD WORDMARK DETAIL

N.T.S.

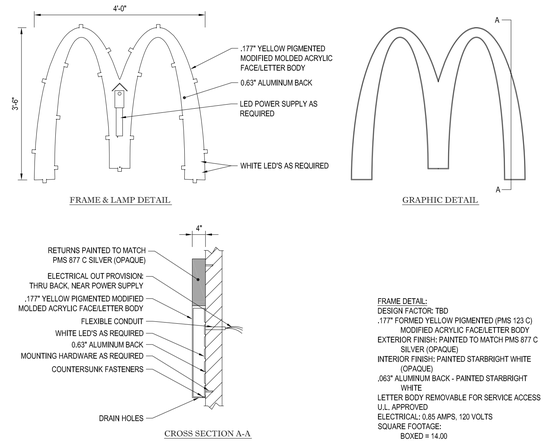

FRAME DETAIL:
DESIGN FACTOR: TBD
.177" FORMED YELLOW PIGMENTED (PMS 123 C) MODIFIED ACRYLIC FACE/LETTER BODY
EXTERIOR FINISH: PAINTED TO MATCH PMS 877 C SILVER (OPAQUE)
INTERIOR FINISH: PAINTED STARBRIGHT WHITE (OPAQUE)
.063" ALUMINUM BACK - PAINTED STARBRIGHT WHITE
LETTER BODY REMOVABLE FOR SERVICE ACCESS
U.L. APPROVED
ELECTRICAL: 0.85 AMPS, 120 VOLTS
SQUARE FOOTAGE:
BOXED = 14.00
ACTUAL = 4.90

MCD WALL ARCH DETAIL

N.T.S.

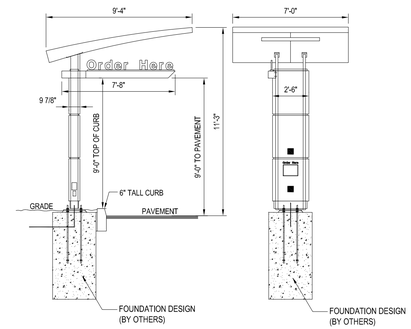

(NOTE: FOUNDATION DESIGN TO BE PROVIDED BY CONTRACTOR, CONTRACTOR SHALL OBTAIN FINAL SPECIFICATIONS FROM SIGN VENDOR)

CUSTOMER ORDER DISPLAY DETAIL

N.T.S.

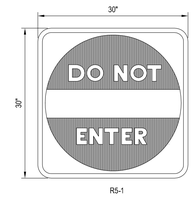

'DO NOT ENTER' SIGN

N.T.S.

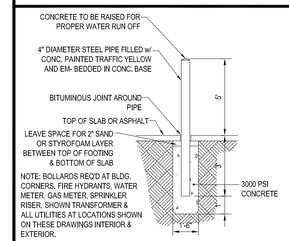

BOLLARD DETAIL

N.T.S.

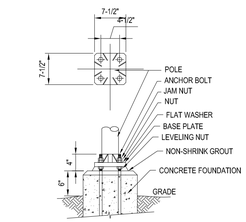

(NOTE: FOUNDATION DESIGN TO BE PROVIDED BY CONTRACTOR)

FLAG POLE BASE

N.T.S.

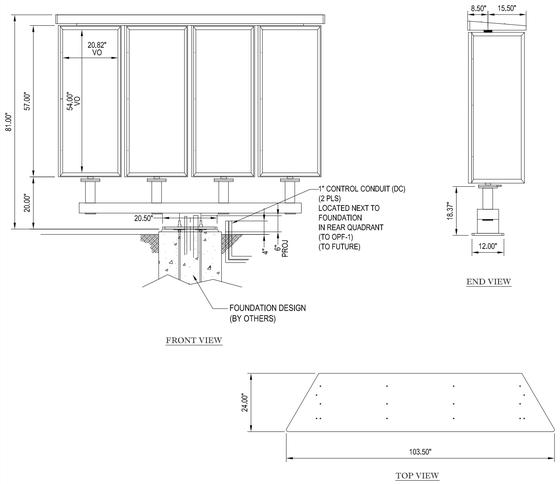

OPO MENU BOARD DETAIL

N.T.S.

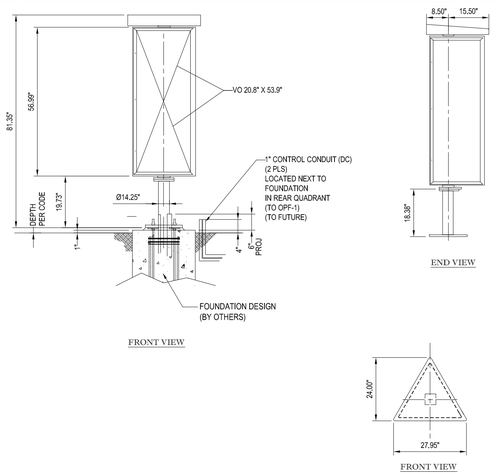

OPO PRESELL BOARD DETAIL

N.T.S.

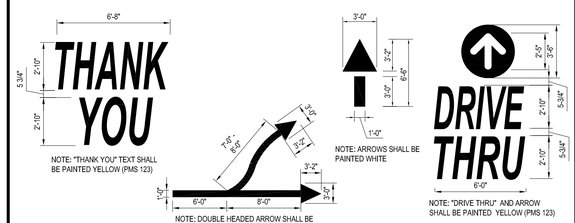

NOTE: ALL PAVEMENT MARKINGS TO MEET THE STANDARDS OF THE CURRENT McDONALD'S SITE PLANNING GUIDE.

TYPICAL PAVEMENT MARKINGS

N.T.S.

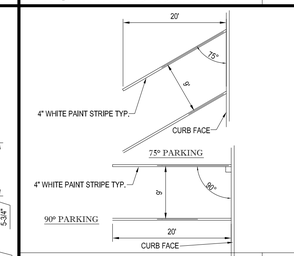

STALL STRIPING

N.T.S.

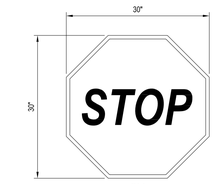

'STOP' SIGN

N.T.S.

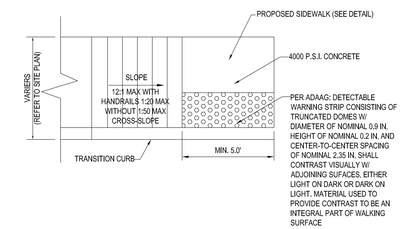

ADA COMPLIANT SLOPED SIDEWALK

N.T.S.

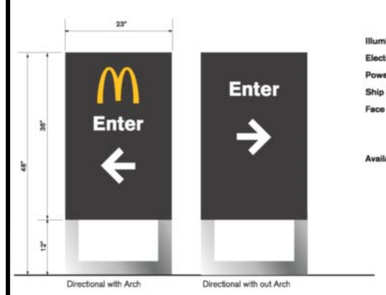

Illumination: LED
Electrical: .25 amps
Power Supply: Amperor ANP90-30P1
Ship Weight: 130 lbs.
Face Details: Laser cut aluminum faces painted charcoal, white illuminated copy and arrow. Optional illuminated gold arch.
Available Copy: Enter, Exit, Welcome, Thank You, Drive-Thru

McDONALD'S DIRECTIONAL SIGN DETAIL

N.T.S.

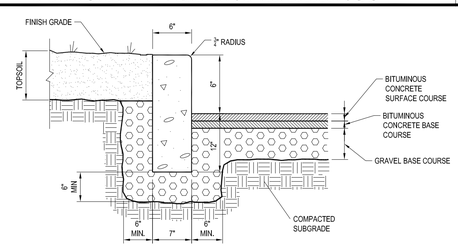

NOTE: CURB SHALL CONSIST OF 4,000 PSI AIR ENTRAINED CONCRETE, EXPOSED EDGES TO HAVE RUBBED FINISH AND SURFACE SHALL BE TREATED WITH A CONCRETE PENETRANT/SEALER.
THE ENDS OF CURB SECTIONS SHALL BE CHAMFERED 1/4 INCH.
THE CORNERS OF CURB SECTIONS SHALL MATCH THE ADJACENT CURB IN SIZE, COLOR AND FINISH.
CURBS, CURB CORNERS OR EDGING SHALL BE FITTED TOGETHER AS CLOSELY AS POSSIBLE.
EXPANSION JOINTS SHALL BE INSTALLED AT A MAXIMUM OF TWENTY FEET (20') ON CENTER USING PREFORMED EXPANSION JOINT FILLER HAVING A THICKNESS OF 1/2 INCH.

PRECAST CONCRETE CURB DETAIL

N.T.S.

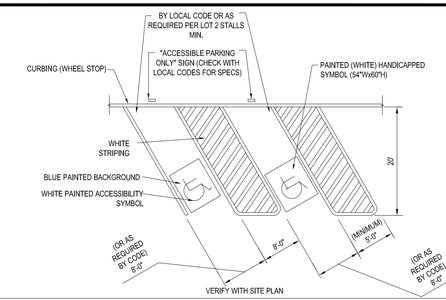

ACCESSIBLE STALL MARKING

N.T.S.

BOHLER ENGINEERING
352 TURNPIKE ROAD
SOUTHBOROUGH, MA 01772
Phone: (508) 480-9900
Fax: (508) 480-9080
www.BohlerEngineering.com

CIVIL & CONSULTING ENGINEERS
SURVEYORS
PROJECT MANAGERS
ENVIRONMENTAL CONSULTANTS
LANDSCAPE ARCHITECTS

OFFICES:
WARREN, NJ
UPSTATE NEW YORK
BOSTON, MA
NEW YORK METRO
PHILADELPHIA/SOUTHERN NJ
LEHIGH VALLEY, PA
SOUTHEASTERN, PA
BALTIMORE, MD
SOUTHERN MARYLAND
NORTHERN VIRGINIA
WASHINGTON, DC
CENTRAL VIRGINIA
CHARLOTTE, NC
RALEIGH, NC

THE INFORMATION, DESIGN AND CONTENT OF THIS PLAN ARE PROPRIETARY AND SHALL NOT BE COPIED OR USED FOR ANY PURPOSE WITHOUT PRIOR WRITTEN AUTHORIZATION FROM BOHLER ENGINEERING. ONLY APPROVED, SIGNED AND SEALED PLANS SHALL BE UTILIZED FOR CONSTRUCTION PURPOSES © 2008 BOHLER ENGINEERING.

CONSTRUCTION CHECK DATE
CONSTRUCTION CHECK DATE
PROJECT No.: W142005
CAD I.D. #: W142005ss0.dwg

-
STREET ADDRESS: 1080 KINGS HIGHWAY
CITY: NEW BEDFORD
STATE: MASSACHUSETTS
COUNTY: PROVIDENCE COUNTY
SITE ID #: 020-0128
PLAN DESCRIPTION: DETAIL SHEET

BY	DESCRIPTION	DATE	REV

J.A. KUCICH
PROFESSIONAL ENGINEER
MASSACHUSETTS LICENSE No. 41530
CONNECTICUT LICENSE No. 20177
RHODE ISLAND LICENSE No. 9616
MAINE LICENSE No. 12553

McDonald's

THESE PLANS AND SPECIFICATIONS ARE THE PROPERTY OF McDONALD'S CORPORATION AND SHALL NOT BE REPRODUCED WITHOUT THEIR WRITTEN PERMISSION.

OFFICE: NORTHEAST REGION
ADDRESS: 690 CANTON STREET, WESTWOOD, MA

PLAN APPROVALS
SIGNATURE | DATE
APPROVED McDONALD'S AGENT

STATUS	DATE	BY
DRAWN BY:	8/12/15	EGD
PLAN CHECKED		JAK
AS-BUILT		

SHEET NO. C-13
OF 15

P:\14\W142005\DWG\W142005ss0.dwg, 13-Decals, 7/7/2015, 5:24:22 AM, eddarville, Nono, ANSI A (8.50 x 11.00 Inches), 1:2.5849