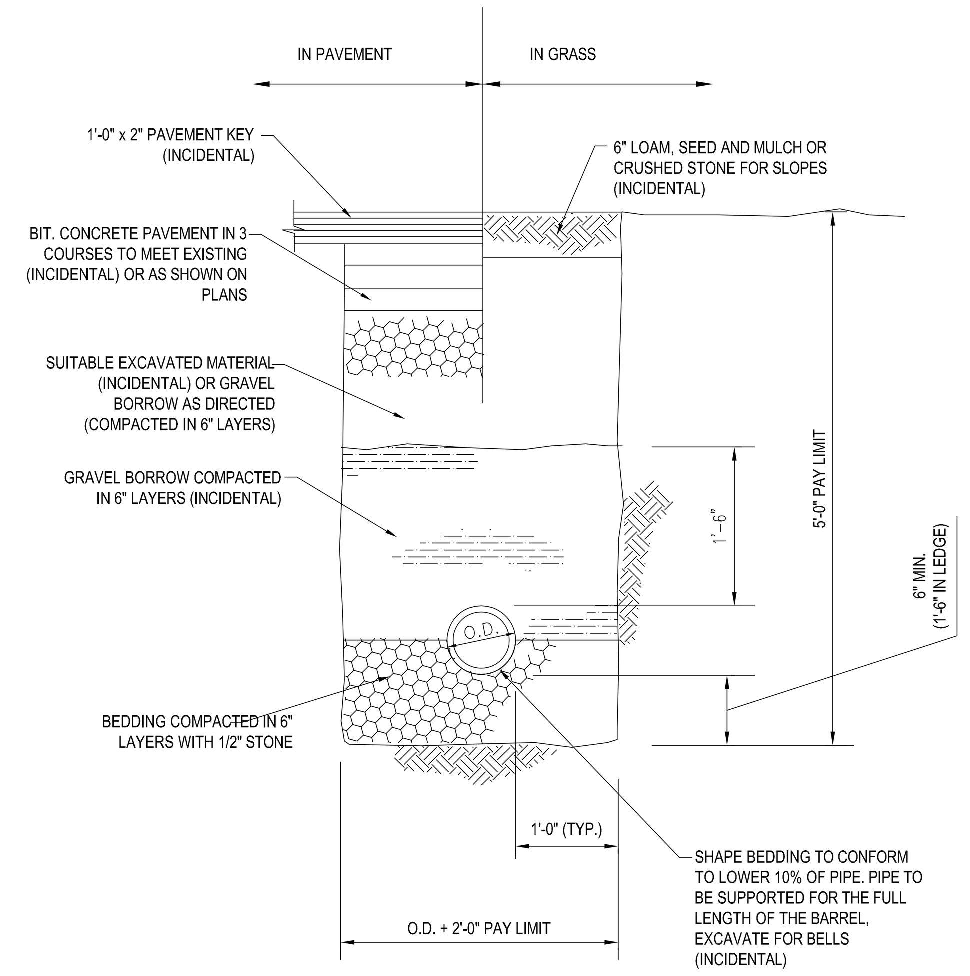

PIPE TRENCH DETAIL

N.T.S.

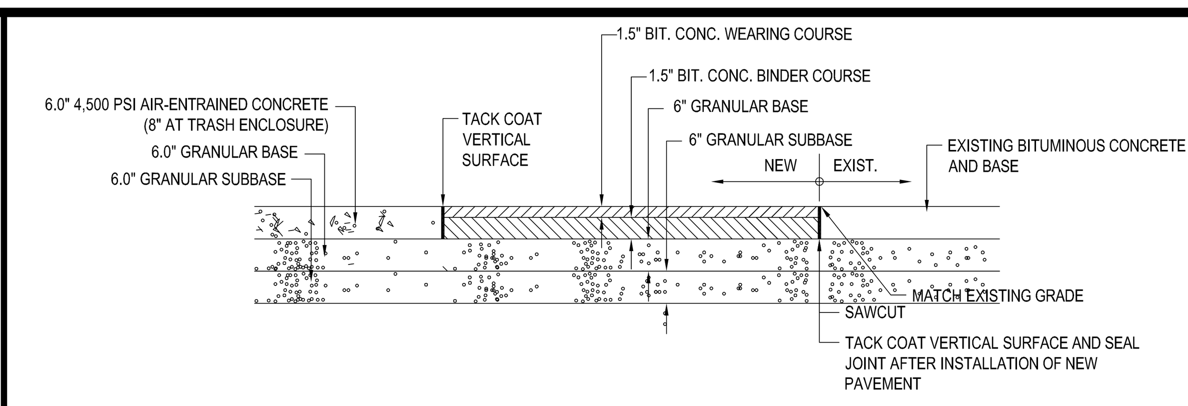

NOTE: FINAL PAVEMENT SPECIFICATIONS TO BE COORDINATED WITH GEOTECHNICAL REPORT RECOMMENDATIONS. McDONALD'S ENGINEER RESERVES THE RIGHT TO REQUEST A COMPACTION TEST AND/OR A CORE SAMPLE. IF TESTS PROVE CORRECT, PER ABOVE SPECIFICATION, TESTS WILL BE AT THE EXPENSE OF McDONALD'S, OTHERWISE, G.C. WILL BE CHARGED.

CONCRETE & BITUMINOUS CONCRETE PAVING DETAIL

N.T.S.

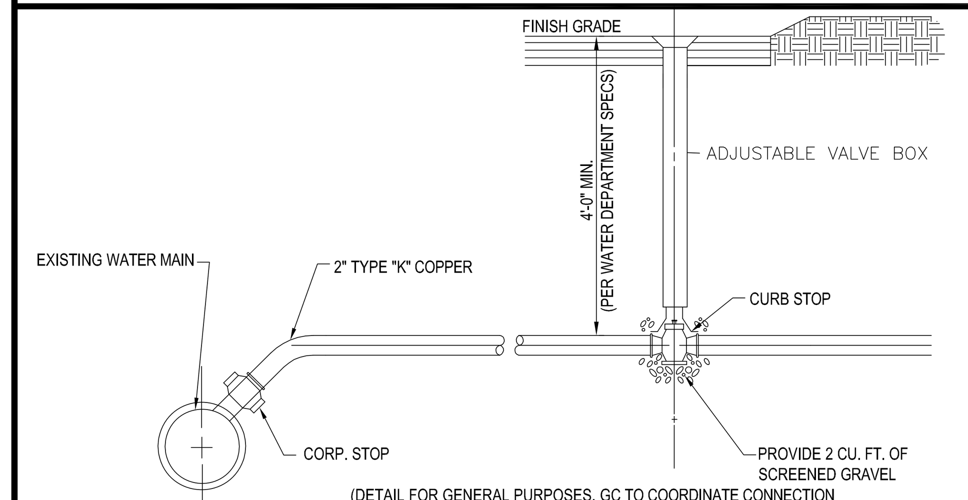

(DETAIL FOR GENERAL PURPOSES. GC TO COORDINATE CONNECTION W/ LOCAL WATER COMPANY)

WATER SERVICE CONNECTION DETAIL

N.T.S.

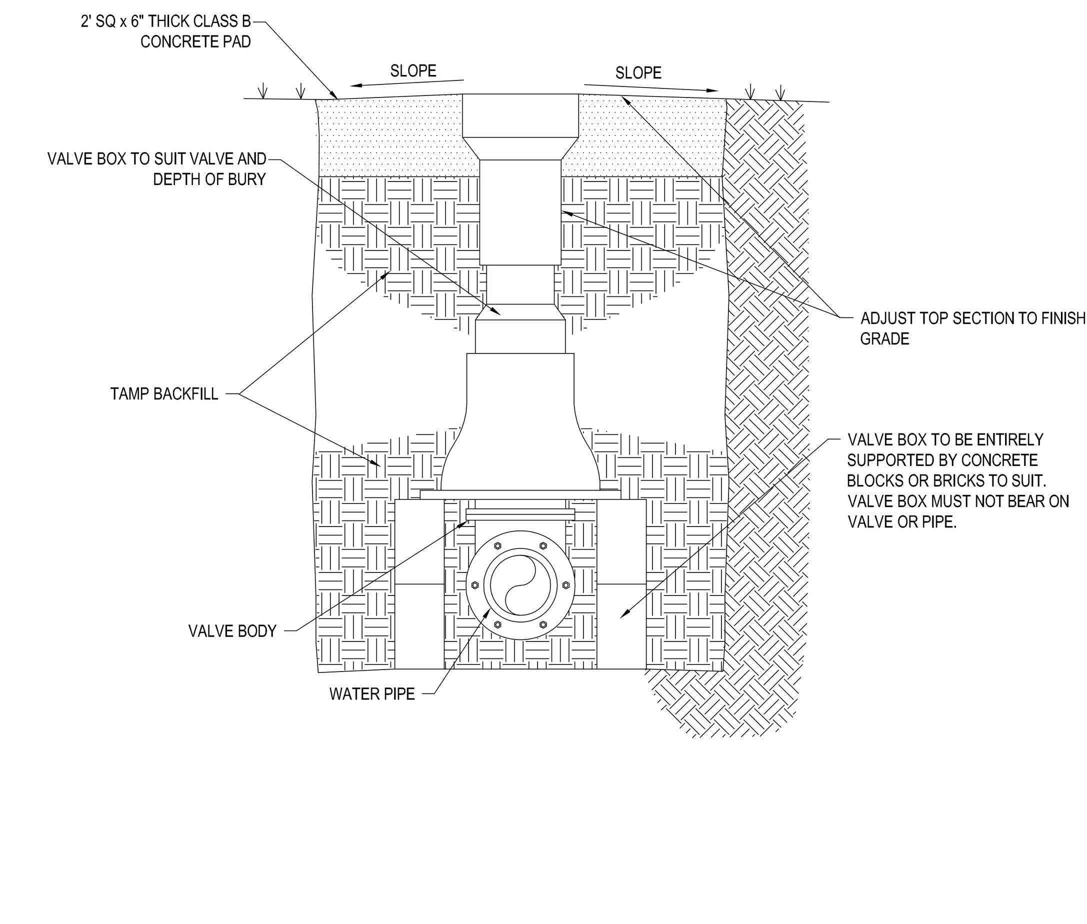

GATE VALVE

N.T.S.

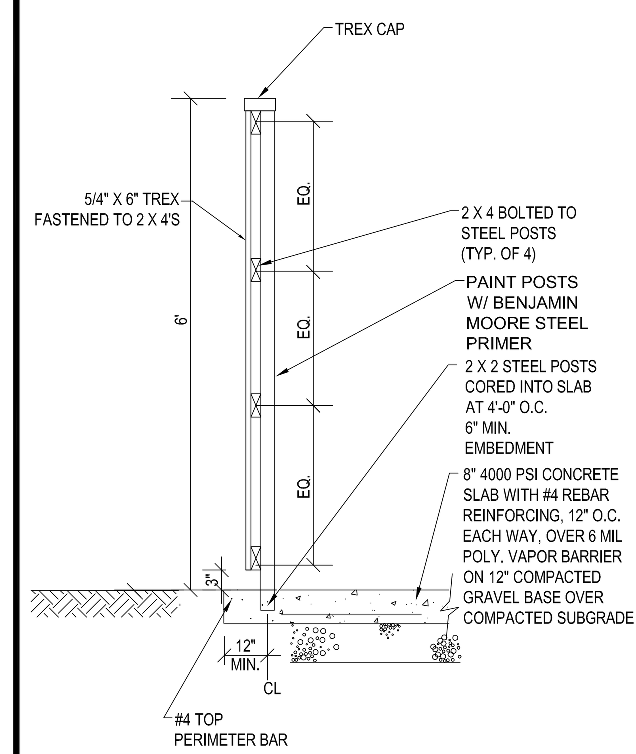

NOTES: 1. ALL WOOD MEMBERS OF TRASH CORRAL ARE TO BE PRESSURE TREATED. ALL FASTENERS ARE TO BE GALVANIZED.

(NOTE: FOUNDATION DESIGN TO BE PROVIDED BY CONTRACTOR)

TRASH ENCLOSURE WALL SECTION

N.T.S.

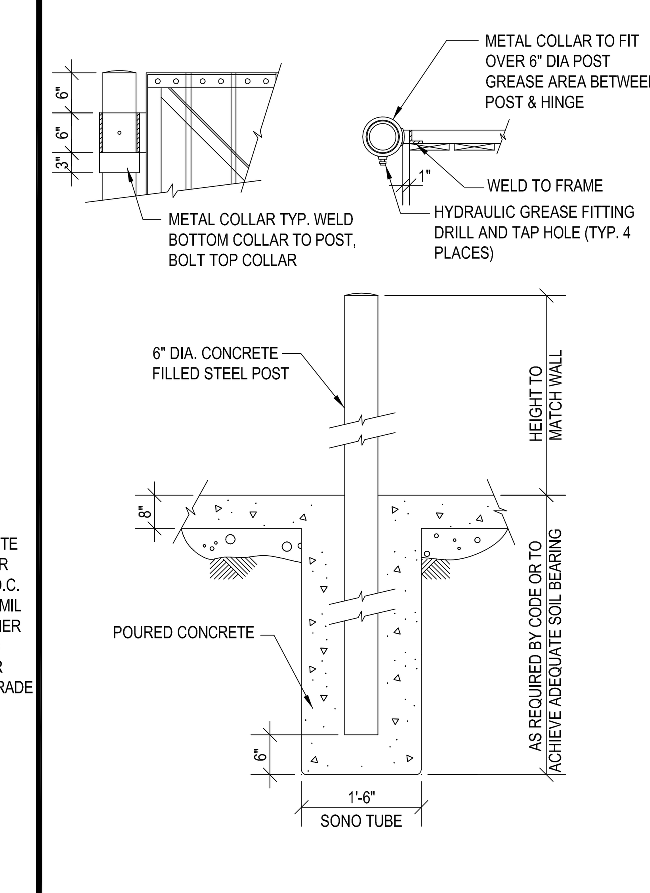

(NOTE: FOUNDATION DESIGN TO BE PROVIDED BY CONTRACTOR)

TRASH ENCLOSURE GATE POST DETAILS

N.T.S.

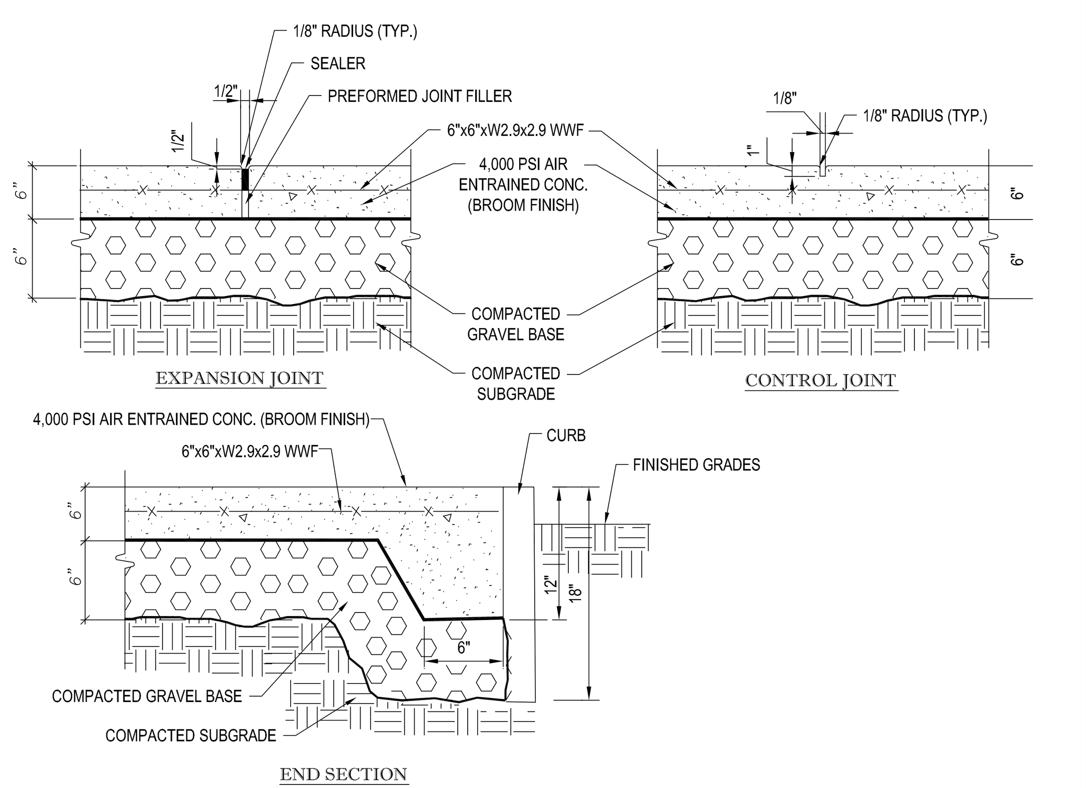

NOTES: TO BE USED FOR BUILDING SURROUND AND OTHER CONCRETE WALKS. USE CHAIRS TO SUPPORT REINFORCING STEEL DURING POUR. VARIES SEE PLAN
1. SEE SITE PLAN FOR WIDTH AND GRADES
2. PROVIDE MINIMUM 1/8"/FT. CROSS-SLOPE
3. PROVIDE CONTROL JOINTS 5'-0" O.C. MIN.
4. PROVIDE EXPANSION JOINTS 20'-0" O.C. MIN.

TYPICAL CONCRETE SIDEWALK DETAIL

N.T.S.

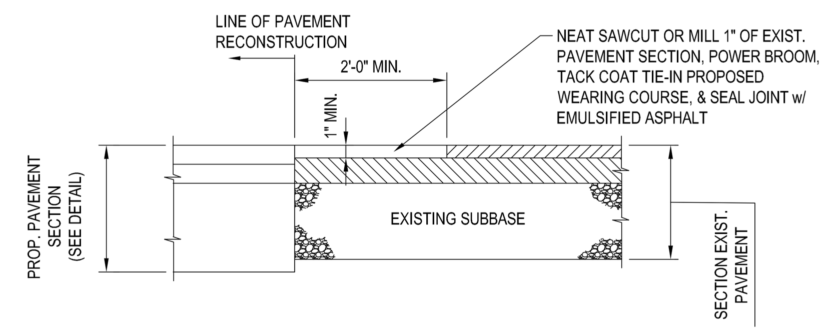

PAVEMENT TIE-IN DETAIL

N.T.S.

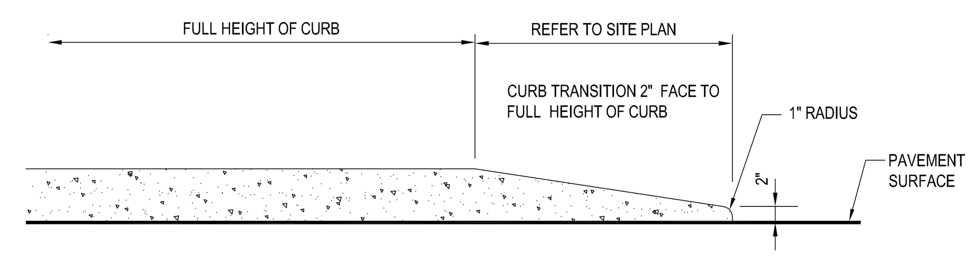

TRANSITION CURB DETAIL

N.T.S.

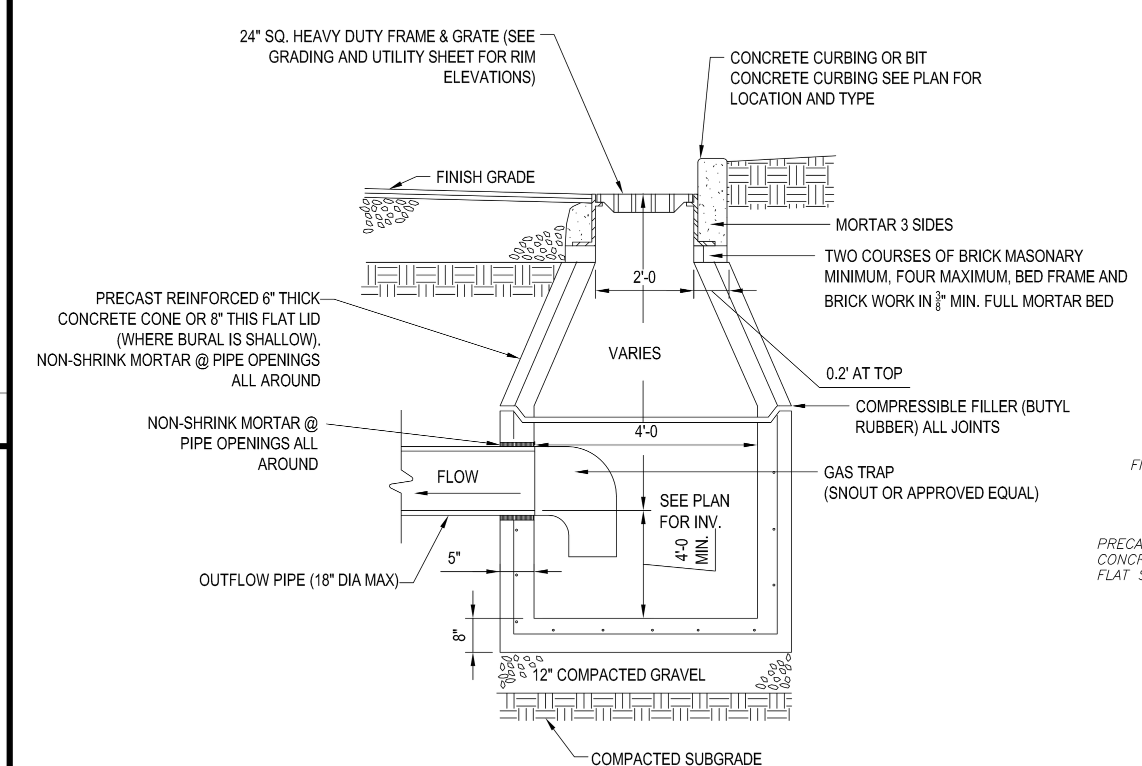

NOTES:
1. ALL STRUCTURES SHALL BE SUITABLE FOR H-20 LOADING AND SHALL MEET THE REQUIREMENTS OF ASTM C478.
2. USE PRECAST FLAT SLAB TOP FOR SHALLOW INVERT APPLICATIONS

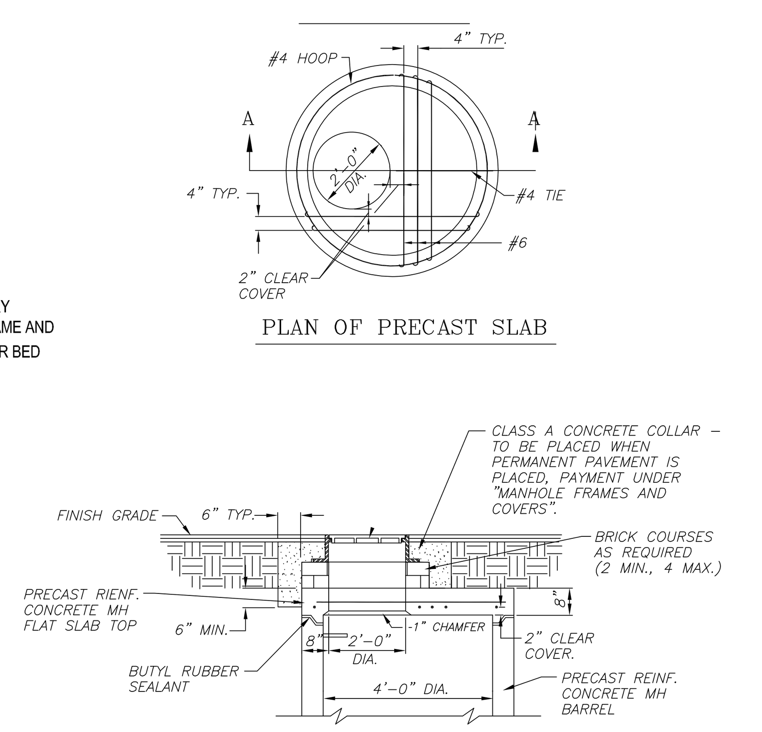

ALTERNATIVE FLAT SLAB TOP FOR SHALLOW MANHOLE

PRECAST CONCRETE DEEP SUMP CATCH BASIN

N.T.S.

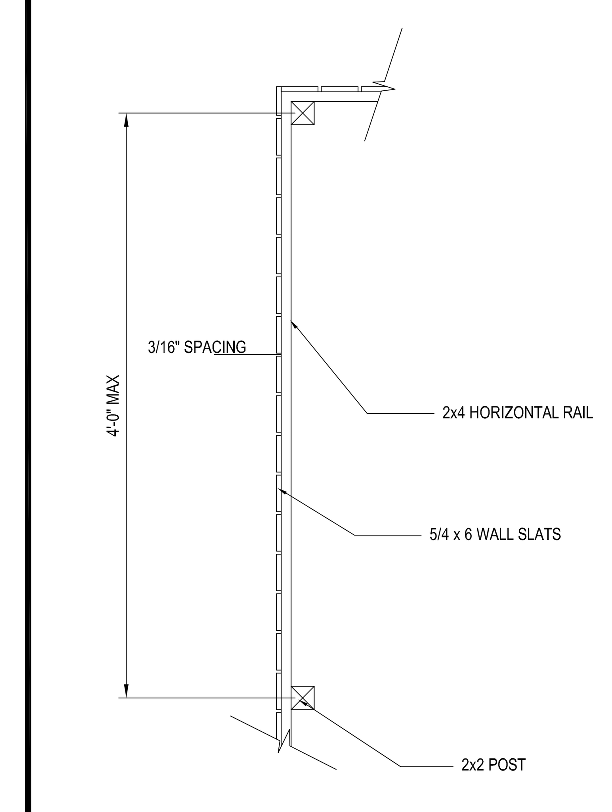

TRASH ENCLOSURE TYP. PLAN ELEV.

N.T.S.

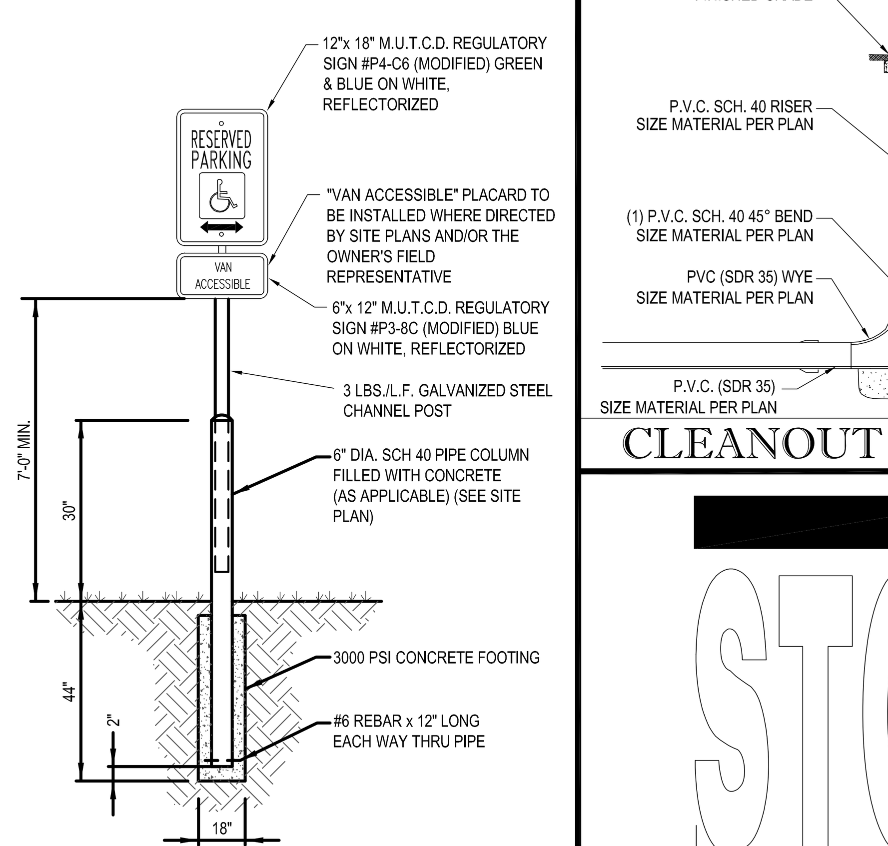

'ACCESSIBLE PARKING ONLY' SIGN

N.T.S.

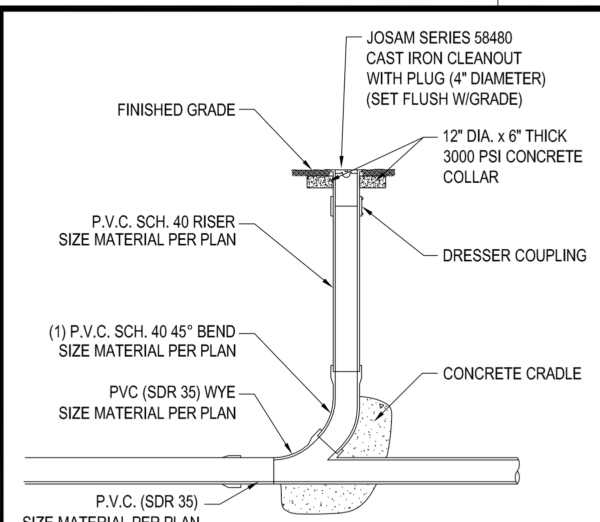

CLEANOUT DETAIL

N.T.S.

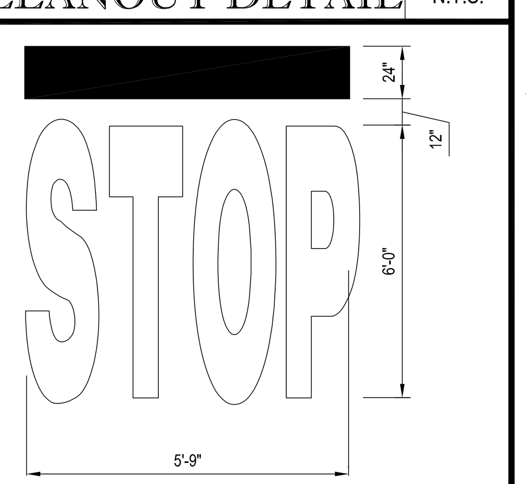

"STOP" BAR DETAIL

N.T.S.

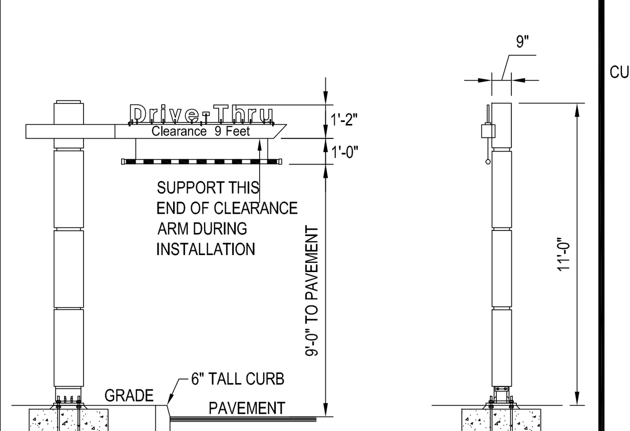

(NOTE: FOUNDATION DESIGN TO BE PROVIDED BY CONTRACTOR. CONTRACTOR SHALL OBTAIN FINAL SPECIFICATIONS FROM SIGN VENDOR)

GATEWAY CLEARANCE BAR DETAIL

N.T.S.

SEE DRIVE THRU CONCRETE PAD DETAIL FOR DIMENSIONS OF DRIVE-THRU LANE CONCRETE PAD FOR DETECTOR LOOP.
NOTE: NO STEEL IS TO BE USED IN CONCRETE.

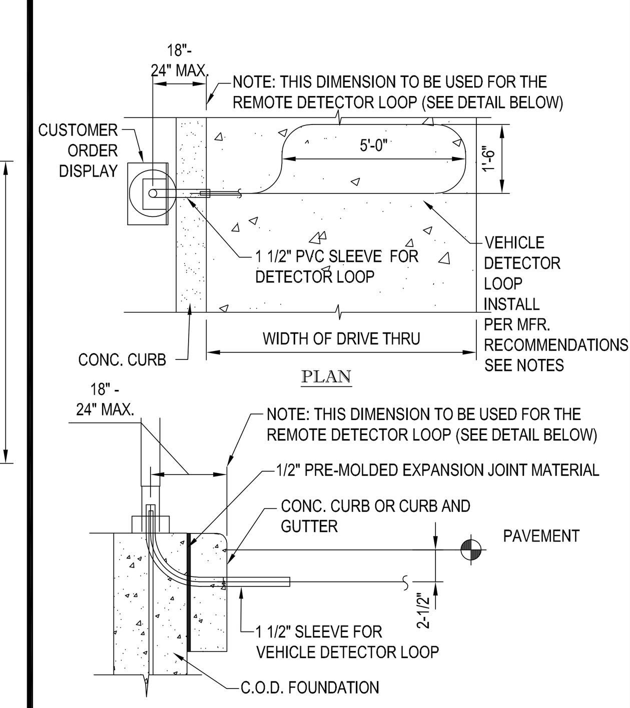

NOTE: FOR REMOTE DETECTOR LOOP ADD CONCRETE PAD, J-BOX AND 24" MAX. DIST. FROM ℄ CONDUIT TO EDGE OF CURB

SECTION

AUTO DETECTOR LOOP DETAIL

N.T.S.

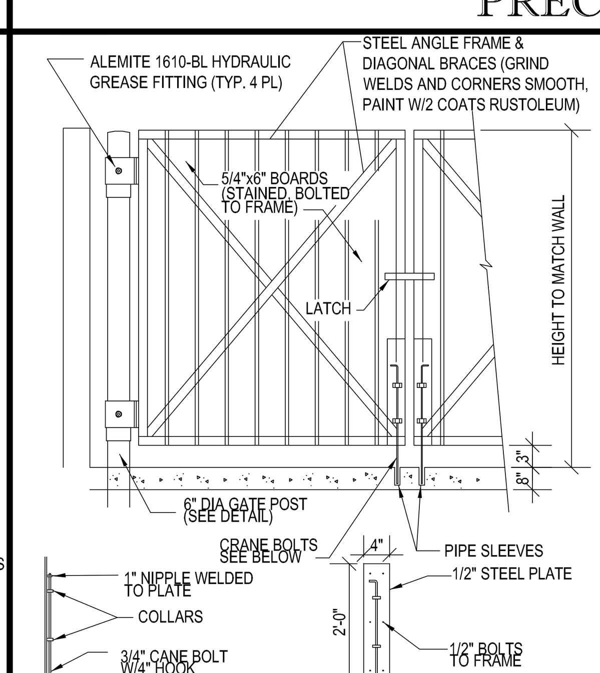

TRASH ENCLOSURE GATE & MOUNTING

N.T.S.

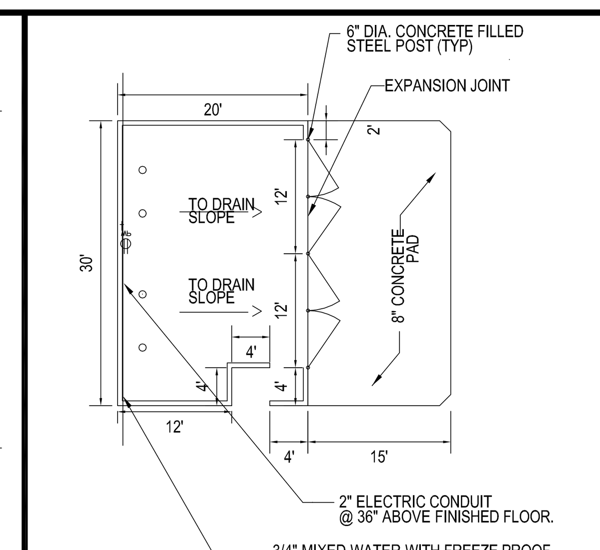

(CONFIRM DIMSENSIONS WITH McDONALDS CONSTRUCTION MANAGER PRIOR TO CONSTRUCTION)

TRASH ENCLOSURE CORALL LAYOUT

N.T.S.

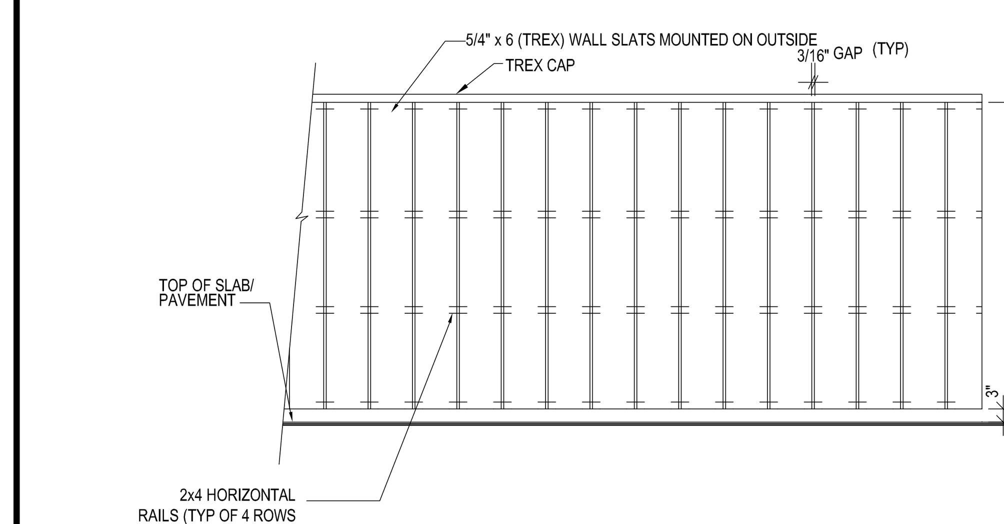

TRASH CORRAL TYPICAL ELEVATION

N.T.S.

BOHLER ENGINEERING

352 TURNPIKE ROAD
SOUTHBOROUGH, MA 01772
Phone: (508) 480-9900
Fax: (508) 480-9080
www.BohlerEngineering.com

CIVIL & CONSULTING ENGINEERS
SURVEYORS
PROJECT MANAGERS
ENVIRONMENTAL CONSULTANTS
LANDSCAPE ARCHITECTS

OFFICES:
- WARREN, NJ
- UPSTATE NEW YORK
- BOSTON, MA
- NEW YORK METRO
- PHILADELPHIA/SOUTHERN NJ
- LEHIGH VALLEY, PA
- SOUTHEASTERN, PA
- BALTIMORE, MD
- SOUTHERN MARYLAND
- NORTHERN VIRGINIA
- WASHINGTON, DC
- CENTRAL VIRGINIA
- CHARLOTTE, NC
- RALEIGH, NC

THE INFORMATION, DESIGN AND CONTENT OF THIS PLAN ARE PROPRIETARY AND SHALL NOT BE COPIED OR USED FOR ANY PURPOSE WITHOUT PRIOR WRITTEN AUTHORIZATION FROM BOHLER ENGINEERING. ONLY APPROVED, SIGNED AND SEALED PLANS SHALL BE UTILIZED FOR CONSTRUCTION PURPOSES © 2008 BOHLER ENGINEERING.

CONSTRUCTION CHECK — DATE

CONSTRUCTION CHECK — DATE

PROJECT No.: W142005

CAD I.D. #: W142005ss0.dwg

-

STREET ADDRESS: 1080 KINGS HIGHWAY

CITY: NEW BEDFORD — STATE: MASSACHUSETTS

COUNTY: PROVIDENCE COUNTY

SITE ID #: 020-0128

PLAN DESCRIPTION: DETAIL SHEET

REV	DATE	DESCRIPTION	BY

J.A. KUCICH
PROFESSIONAL ENGINEER
MASSACHUSETTS LICENSE No. 41530
CONNECTICUT LICENSE No. 26177
RHODE ISLAND LICENSE No. 9616
MAINE LICENSE No. 12553

McDonald's®

THESE PLANS AND SPECIFICATIONS ARE THE PROPERTY OF McDONALD'S CORPORATION AND SHALL NOT BE REPRODUCED WITHOUT THEIR WRITTEN PERMISSION.

OFFICE: NORTHEAST REGION
ADDRESS: 690 CANTON STREET, WESTWOOD, MA

PLAN APPROVALS
DATE	SIGNATURE
	APPROVED McDONALD'S AGENT

STATUS	DATE	BY
DRAWN BY:	8/12/15	EGD
PLAN CHECKED		JAK
AS-BUILT		

SHEET NO. C-14 OF 15

P:\14\W142005\DWG\W142005ss0.dwg, 14-Details, 7/7/2015, 5:24:22 AM, edubrule, None, ANSI A (8.50 x 11.00 Inches), 1:2.5849