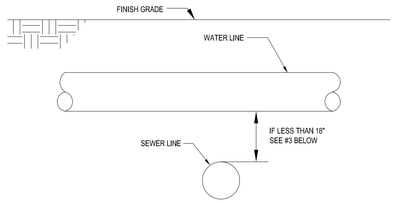

NOTES:
1. THE VERTICAL SEPARATION BETWEEN THE WATER MAIN AND THE SEWER LINE SHALL BE A MINIMUM OF 18 INCHES.
2. THE HORIZONTAL SEPARATION BETWEEN THE WATER MAIN AND THE SEWER LINE SHALL BE A MINIMUM OF 10 FEET.
3. IF 1 OR 2 CANNOT BE MAINTAINED EITHER:
   A. WATER MAIN IS TO BE RE-LOCATED OR RE-CONSTRUCTED USING MECHANICAL JOINTS DUCTILE IRON PIPE FOR A DISTANCE OF 10 FEET ON EITHER SIDE OF THE CROSSING. CENTER WATER MAIN LENGTH OF PIPE SO THAT CENTER OF PIPE SECTION IS OVER SEWER. CENTER LENGTH OF SEWER PIPE UNDER CENTER OF WATER MAIN SO THAT JOINTS ARE THE MAXIMUM DISTANCE POSSIBLE APART.
   B. WATER AND SEWER LINES SHALL BE CONCRETE ENCASED PER DETAIL.

WHERE 10' HORIZONTAL SEPARATION
OR 18" VERTICAL SEPARATION CANNOT BE ACHIEVED

WATER MAIN CROSSINGS

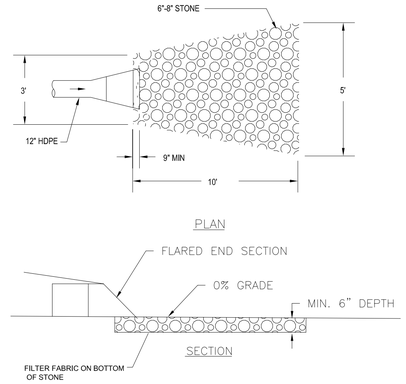

FLARED END RIP RAP DETAIL

N.T.S.

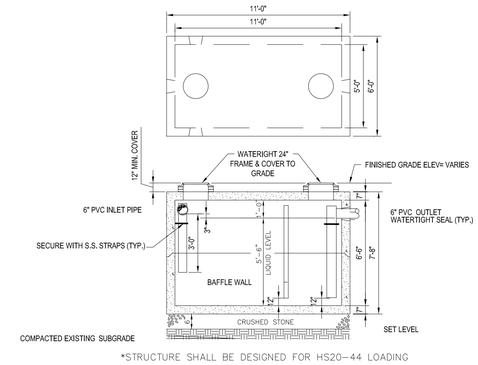

*STRUCTURE SHALL BE DESIGNED FOR HS20-44 LOADING

PRECAST GREASE TRAP 2,000 GAL./H.D.

N.T.S.

N.T.S.

REV	DATE	DESCRIPTION	BY

J.A. KUCICH
PROFESSIONAL ENGINEER
MASSACHUSETTS LICENSE No. 41530
CONNECTICUT LICENSE No. 20177
RHODE ISLAND LICENSE No. 9616
MAINE LICENSE No. 12553

Stormceptor®

Hydro Conduit	DR. BY: N. BALDWIN
STC 450i Precast Concrete Stormceptor (450 US Gallon Capacity)	CK. BY:
PROJECT:	DATE: MARCH 20, 2001
LOCATION:	SCALE: N.T.S.
	DWG.#

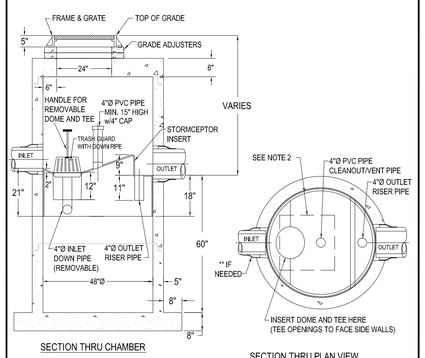

SECTION THRU CHAMBER

SECTION THRU PLAN VIEW

NOTE :
1. THE USE OF FLEXIBLE CONNECTIONS IS RECOMMENDED AT THE OUTLET WHERE APPLICABLE.
2. THE COVER SHOULD BE POSITIONED OVER THE 4"Ø CLEANOUT/VENT PIPE AND THE 4"Ø INLET DOWN PIPE.
3. THE STORMCEPTOR SYSTEM IS PROTECTED BY ONE OR MORE OFF THE FOLLOWING U.S. PATENTS: #4985148, #5498331, #5725760, #5753115, #5849181, #6068765, AND #6371690.
4. CONTRACTOR TO PROVIDE CRANE TO SET UNIT (HEAVIEST SECTION WEIGHS 5000 LB)

STORMCEPTOR STC 450i

N.T.S.

Stormceptor®

Hydro Conduit	DR. BY: N. BALDWIN
STC 900 Precast Concrete Stormceptor (900 US Gallon Capacity)	CK. BY:
PROJECT:	DATE: FEB. 13, 2001
LOCATION:	SCALE: N.T.S.
	DWG.#

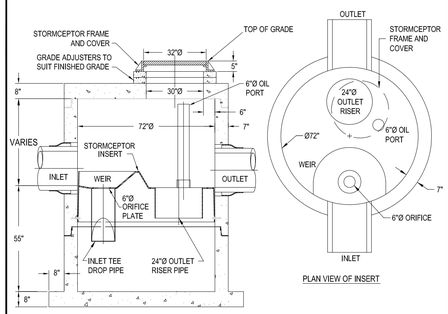

SECTION THRU CHAMBER

PLAN VIEW OF INSERT

NOTE :
1. THE USE OF FLEXIBLE CONNECTIONS IS RECOMMENDED AT THE INLET AND OUTLET WHERE APPLICABLE.
2. THE COVER SHOULD BE POSITIONED OVER THE 24"Ø OUTLET RISER PIPE AND THE 6"Ø OIL PORT.
3. THE STORMCEPTOR SYSTEM IS PROTECTED BY ONE OR MORE OF THE FOLLOWING U.S. PATENTS: #4985148, #5498331, #5725760, #5753115, #5849181, #6068765, AND #6371690.
4. CONTRACTOR TO PROVIDE CRANE TO SET THE UNIT (HEAVIEST SECTION WEIGHS 5.9 TONS).

REV.	DESCRIPTION	BY:	DATE

STORMCEPTOR STC 900

N.T.S.

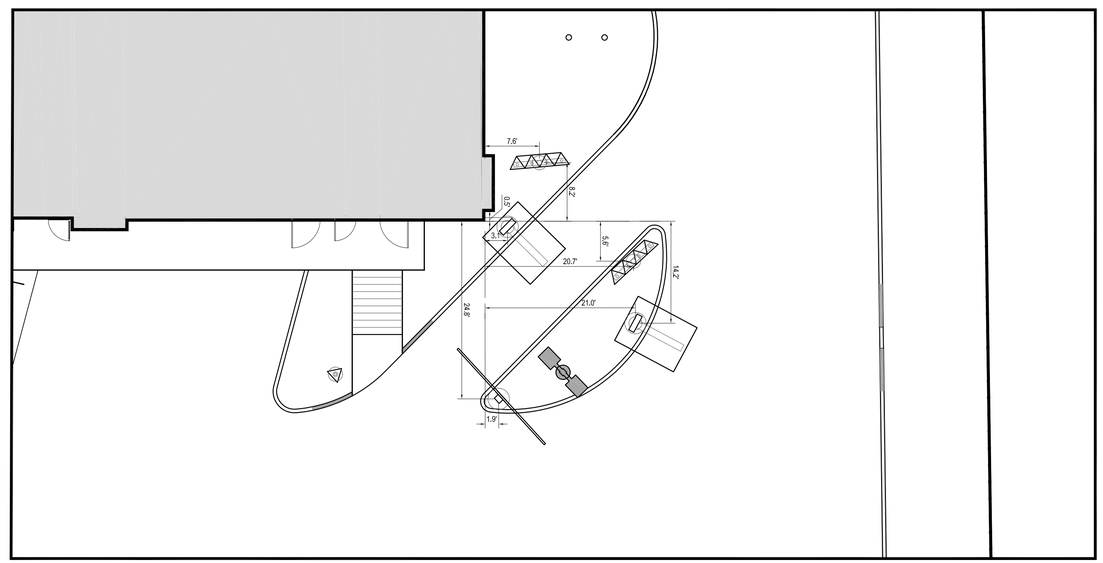

SIDE-BY-SIDE STANDARDS & DESIGN TOLERANCES:

1) DISTANCE FROM CENTER OF OPEN PRESENT WINDOW TO CENTER OF OPEN CASH WINDOW STANDARD IN 42'-45' AND IS SPECIFIC TO EACH BUILDING CONFIGURATION. ACCEPTABLE TOLERANCE IS 40' MIN ON REMODELS ONLY.

2) DISTANCE FROM CENTER OF OPEN CASH WINDOW TO CENTER OF PRIMARY LANE COD IS 100' OPTIMUM, 80' OR 60' MIN. ACCEPTABLE TOLERANCE IS PLUS OR MINUS 5' FOR 100' OR 80' QUEUES.

3) THE CRITICAL HOLD DISTANCE FROM CENTER OF COD TO CENTER OF MENU BOARD FOOTING IN PRIMARY LANE IS 10'-0". THE ANGLE OF THE MENU BOARD CAN BE ADJUSTED FROM 40-50 DEGREES ALLOWING 100% VISIBILITY FOR THE FIRST CAR AT THE COD.

4) THE CRITICAL HOLD DISTANCE FROM CENTER OF THE PRIMARY LANE COD TO THE TIP OF THE CURBED ISLAND IS 15'-0".

5) THE CRITICAL HOLD DISTANCE FROM TIP OF ISLAND TO CENTER OF SECONDARY LANE MENU BOARD IS 6'-0". THE DISTANCE FROM OUTSIDE CURB TO THE CENTER OF MENU BOARD IS 22".

6) THE CRITICAL HOLD DISTANCE FROM TIP OF ISLAND TO CENTER OF SECONDARY LANE COD IS 14'-0".

7) THE ISLAND WIDTH IS 13'-0" STANDARD FROM FACE OF CURB TO CURB.

8) THE PRE-SELL BOARD IS OPTIONAL AND IS GENERALLY LOCATED 30'-0" FROM THE CENTER OF THE COD IN THE PRIMARY LANE. THE END OF THE FRONT FACE OF THE BOARD SHOULD BE 18'-24" FROM THE FACE OF THE CURB.

10) A GATEWAY IS REQUIRED AND PLACED AT THE DRIVE-THRU LANE ENTRANCE.

11) EVERY SBS SHOULD HAVE BOTH COD/CANOPY IN BOTH LANES.

DRIVE-THRU

SCALE: 1"=10'

THE REGIONAL CONSTRUCTION MANAGER IS TO REVIEW AND APPROVE ALL DRIVE-THRU LAYOUTS. A DRIVE-THRU IS FINAL, AND CONSIDERED "RED", ONCE APPROVED. NO CHANGES ARE TO BE MADE AFTER THIS POINT.

NOTE:
THE PLACEMENT OF THE CODs SHOULD BE SUCH THAT IT PREVENTS, OR MINIMIZES, BLOCKING THE CUSTOMER'S VIEW OF THE MENU BOARD WHILE ORDERING.

NOTE:
LINEAR DIMENSIONS ARE MEASURED PERPENDICULAR TO THE BUILDING FACES SHOWN UNLESS OTHERWISE NOTED.

NOTE:
ALL SIGN BOLLARDS ARE TO BE 18"-24" FROM FACE OF CURB. THIS IS MEASURED FROM THE CLOSEST POINT ON THE SIGN.

DRIVE-THRU

SCALE: 1"=10'

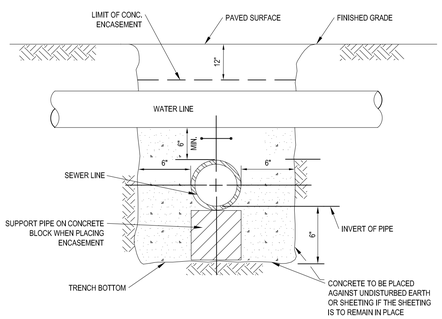

NOTES:
1. PIPE MUST BE BRACED VERTICALLY & HORIZONTALLY TO PREVENT FLOATATION DURING PLACEMENT OF CONCRETE
2. ALL CONCRETE ENCASEMENT SHALL BE KEPT 12" BELOW THE BOTTOM OF ASPHALT PAVEMENT

CONCRETE ENCASEMENT DETAIL

N.T.S.

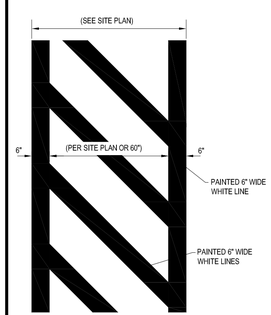

CROSSWALK DETAIL

N.T.S.

N.T.S.

McDonald's®

THESE PLANS AND SPECIFICATIONS ARE THE PROPERTY OF MCDONALD'S CORPORATION AND SHALL NOT BE REPRODUCED WITHOUT THEIR WRITTEN PERMISSION.

OFFICE: NORTHEAST REGION
ADDRESS: 690 CANTON STREET, WESTWOOD, MA

PLAN APPROVALS

	DATE
SIGNATURE	
APPROVED MCDONALD'S AGENT	

BOHLER ENGINEERING

352 TURNPIKE ROAD
SOUTHBOROUGH, MA 01772
Phone: (508) 480-9900
Fax: (508) 480-9080
www.BohlerEngineering.com

CIVIL & CONSULTING ENGINEERS
SURVEYORS
PROJECT MANAGERS
ENVIRONMENTAL CONSULTANTS
LANDSCAPE ARCHITECTS

OFFICES:
- WARREN, NJ
- UPSTATE NEW YORK
- BOSTON, MA
- NEW YORK METRO
- PHILADELPHIA/SOUTHERN NJ
- LEHIGH VALLEY, PA
- SOUTHEASTERN, PA
- BALTIMORE, MD
- SOUTHERN MARYLAND
- NORTHERN VIRGINIA
- WASHINGTON, DC
- CENTRAL VIRGINIA
- CHARLOTTE, NC
- RALEIGH, NC

THE INFORMATION, DESIGN AND CONTENT OF THIS PLAN ARE PROPRIETARY AND SHALL NOT BE COPIED OR USED FOR ANY PURPOSE WITHOUT PRIOR WRITTEN AUTHORIZATION FROM BOHLER ENGINEERING. ONLY APPROVED, SIGNED AND SEALED PLANS SHALL BE UTILIZED FOR CONSTRUCTION PURPOSES © 2008 BOHLER ENGINEERING.

CONSTRUCTION CHECK DATE
CONSTRUCTION CHECK DATE

PROJECT No.: W142005

CAD I.D. #: W142005ss0.dwg

-

STREET ADDRESS
1080 KINGS HIGHWAY

CITY	STATE
NEW BEDFORD	MASSACHUSETTS

COUNTY
PROVIDENCE COUNTY

SITE ID #
020-0128

PLAN DESCRIPTION
DETAIL SHEET

STATUS	DATE	BY
DRAWN BY:	8/12/15	EGD
PLAN CHECKED		JAK
AS-BUILT		

SHEET NO.
C-15
OF 15

P:\14W\42005SD\WCSW\42005ss0.dwg, 15-Details, 7/7/2015, 5:24:22 AM, eduardo, None, ANSI A (8.50 x 11.00 Inches), 1:2.5849