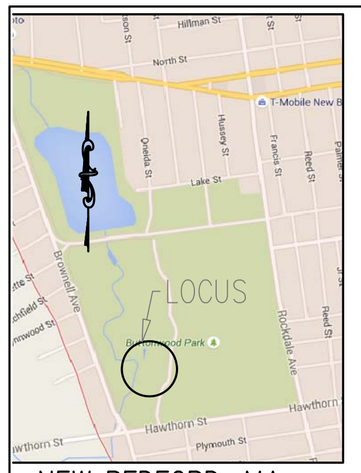

NEW BEDFORD, MA
PLAT 43, LOT 5
N.T.S.

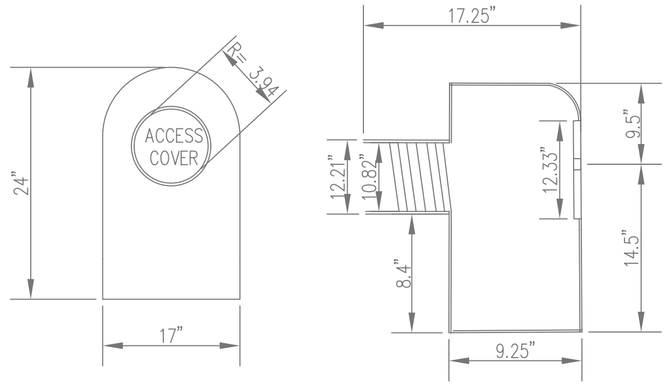

"THE ELIMINATOR"
CATCH BASIN OIL & DEBRIS TRAP

NOT TO SCALE

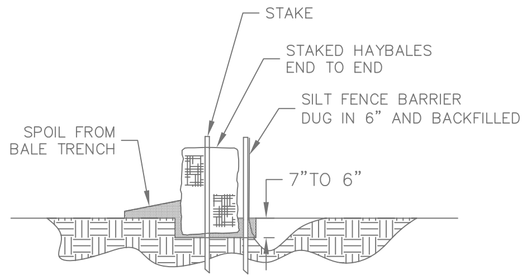

NOTES:

1. HAYBALES TO BE TIED WITH ORGANIC FIBER TWINE ONLY, NO PLASTIC OR WIRE.

2. HAYBALES TO BE SECURED WITH A MINIMUM OF TWO WOODEN STAKES PER BALE. STAKES TO BE DRIVEN IN A MINIMUM OF 18" INTO THE GROUND.

SEDIMENTATION BARRIER

NOT TO SCALE

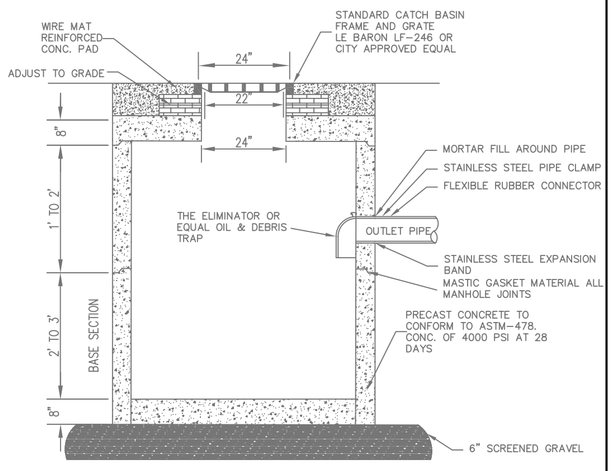

4' DIA. SHALLOW CATCH BASIN

NOT TO SCALE

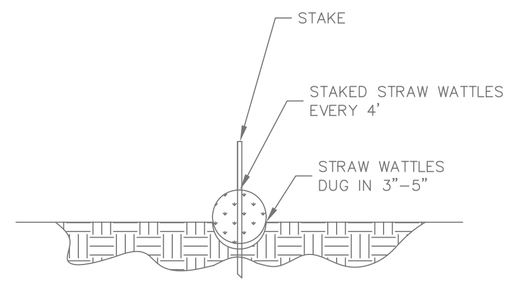

NOTES:

1. STRAW WATTLES TO BE TIED WITH ORGANIC FIBER TWINE ONLY, NO PLASTIC OR WIRE.

2. STRAW WATTLES TO BE SECURED WITH A MINIMUM OF ONE WOODEN STAKE EVERY 4 LINEAR FEET. STAKES TO BE DRIVEN IN A MINIMUM OF 18" INTO THE GROUND.

SEDIMENTATION BARRIER

NOT TO SCALE

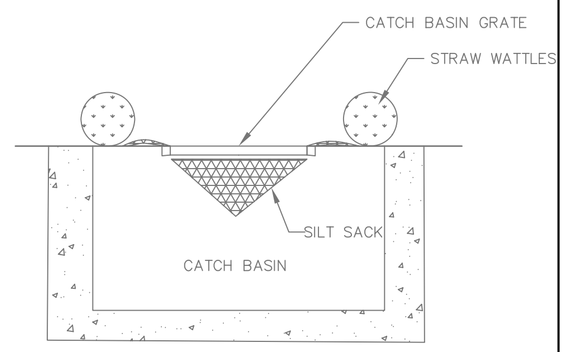

NOTES:

1. SILT SACK TO BE SECURED IN BETWEEN THE CATCH BASIN GRATE AND CATCH BASIN RIM.

CATCH BASIN PROTECTION

NOT TO SCALE

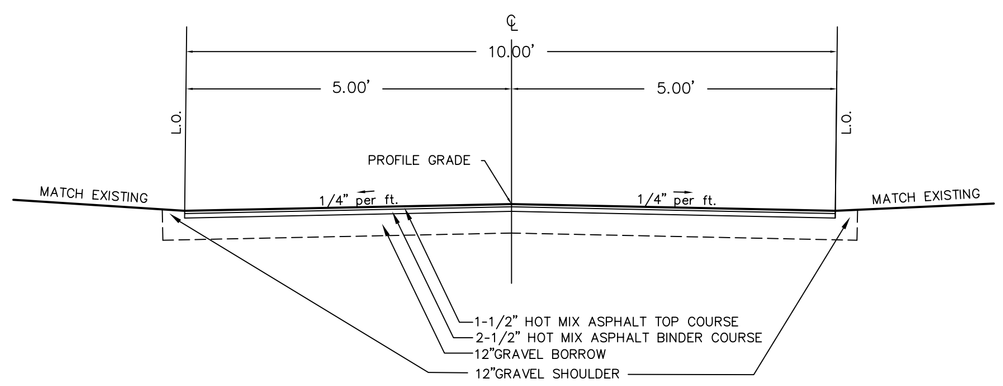

TYPICAL SECTION FOR DRIVE WAY

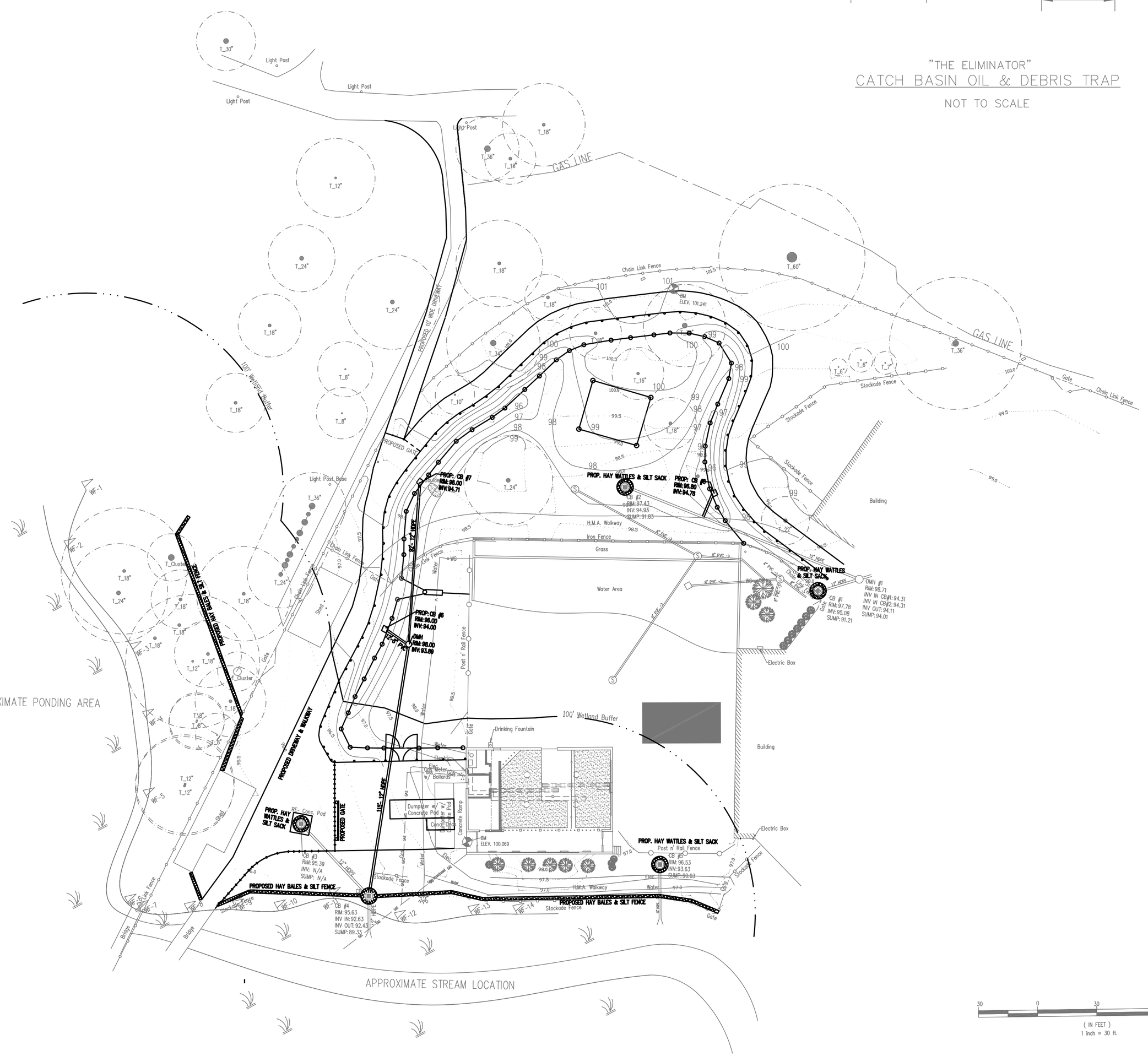

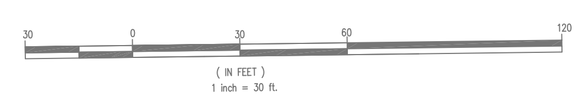

REVISED 6/28/15 - DRAINAGE
REVISED 7/7/2015 - WETLAND FLAGS AND UTILITIES
REVISED 7/10/2015 - TREES AND DRIP LINES
- ACCESS DRIVEWAY
REVISED 7/21/2015 - CONSERVATION PLAN DETAILS
REVISED 8/3/2015 - DRIVEWAY AND DRAINAGE

CONSERVATION RDA PLAN
Elephant Exhibit—Overview

CITY OF NEW BEDFORD
DEPARTMENT OF PUBLIC INFRASTRUCTURE

Buttonwood Park Zoo

DESIGNED BY :	SCALE: 1" = 30'
CHECKED BY : M. Silva	DATE : APRIL 2015

Elephant Exhibit.DWG SD