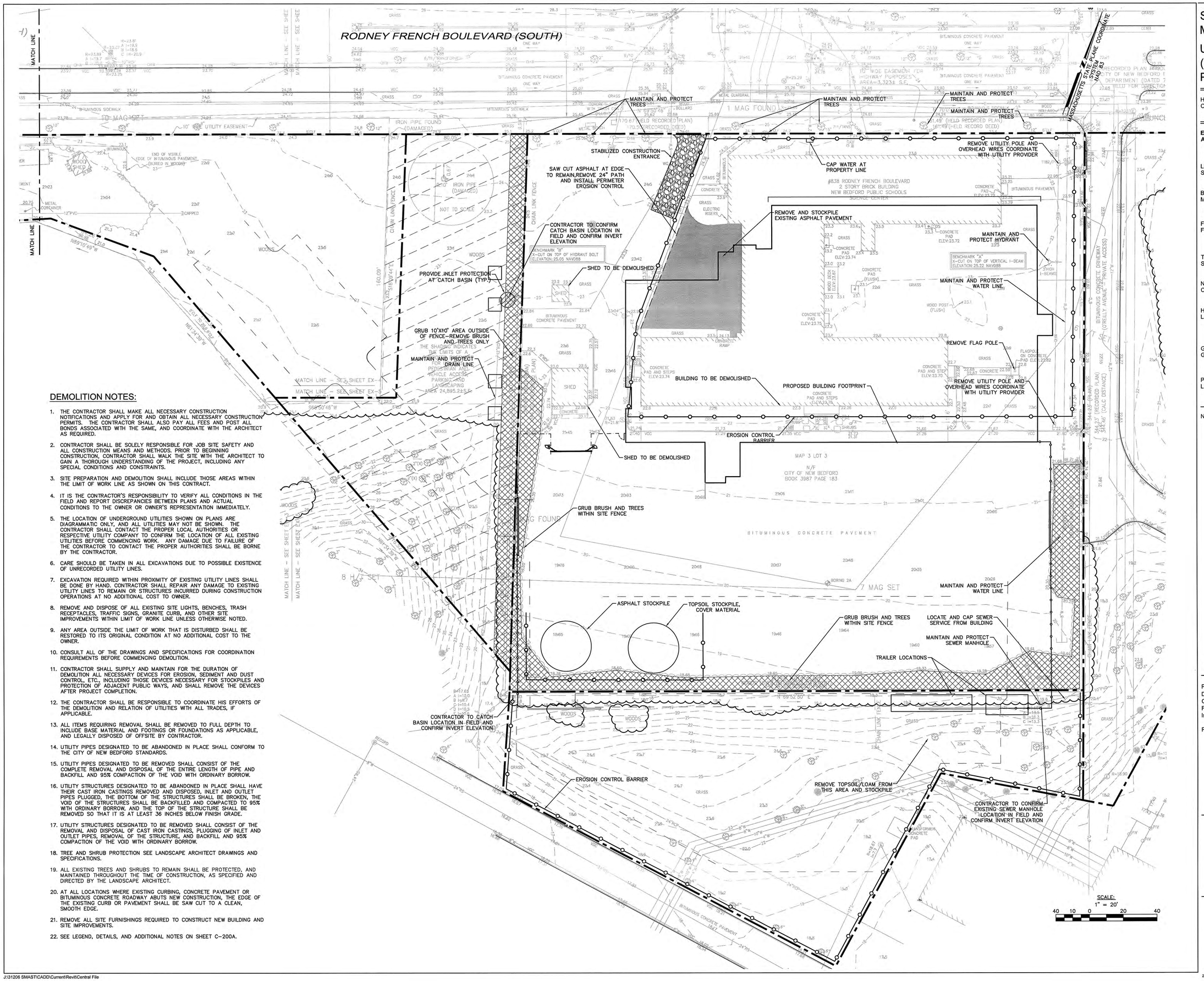

DEMOLITION NOTES:

1. THE CONTRACTOR SHALL MAKE ALL NECESSARY CONSTRUCTION NOTIFICATIONS AND APPLY FOR AND OBTAIN ALL NECESSARY CONSTRUCTION PERMITS. THE CONTRACTOR SHALL ALSO PAY ALL FEES AND POST ALL BONDS ASSOCIATED WITH THE SAME, AND COORDINATE WITH THE ARCHITECT AS REQUIRED.
2. CONTRACTOR SHALL BE SOLELY RESPONSIBLE FOR JOB SITE SAFETY AND ALL CONSTRUCTION MEANS AND METHODS. PRIOR TO BEGINNING CONSTRUCTION, CONTRACTOR SHALL WALK THE SITE WITH THE ARCHITECT TO GAIN A THOROUGH UNDERSTANDING OF THE PROJECT, INCLUDING ANY SPECIAL CONDITIONS AND CONSTRAINTS.
3. SITE PREPARATION AND DEMOLITION SHALL INCLUDE THOSE AREAS WITHIN THE LIMIT OF WORK LINE AS SHOWN ON THIS CONTRACT.
4. IT IS THE CONTRACTOR'S RESPONSIBILITY TO VERIFY ALL CONDITIONS IN THE FIELD AND REPORT DISCREPANCIES BETWEEN PLANS AND ACTUAL CONDITIONS TO THE OWNER OR OWNER'S REPRESENTATION IMMEDIATELY.
5. THE LOCATION OF UNDERGROUND UTILITIES SHOWN ON PLANS ARE DIAGRAMMATIC ONLY, AND ALL UTILITIES MAY NOT BE SHOWN. THE CONTRACTOR SHALL CONTACT THE PROPER LOCAL AUTHORITIES OR RESPECTIVE UTILITY COMPANY TO CONFIRM THE LOCATION OF ALL EXISTING UTILITIES BEFORE COMMENCING WORK. ANY DAMAGE DUE TO FAILURE OF THE CONTRACTOR TO CONTACT THE PROPER AUTHORITIES SHALL BE BORNE BY THE CONTRACTOR.
6. CARE SHOULD BE TAKEN IN ALL EXCAVATIONS DUE TO POSSIBLE EXISTENCE OF UNRECORDED UTILITY LINES.
7. EXCAVATION REQUIRED WITHIN PROXIMITY OF EXISTING UTILITY LINES SHALL BE DONE BY HAND. CONTRACTOR SHALL REPAIR ANY DAMAGE TO EXISTING UTILITY LINES TO REMAIN OR STRUCTURES INCURRED DURING CONSTRUCTION OPERATIONS AT NO ADDITIONAL COST TO OWNER.
8. REMOVE AND DISPOSE OF ALL EXISTING SITE LIGHTS, BENCHES, TRASH RECEPTACLES, TRAFFIC SIGNS, GRANITE CURB, AND OTHER SITE IMPROVEMENTS WITHIN LIMIT OF WORK LINE UNLESS OTHERWISE NOTED.
9. ANY AREA OUTSIDE THE LIMIT OF WORK THAT IS DISTURBED SHALL BE RESTORED TO ITS ORIGINAL CONDITION AT NO ADDITIONAL COST TO THE OWNER.
10. CONSULT ALL OF THE DRAWINGS AND SPECIFICATIONS FOR COORDINATION REQUIREMENTS BEFORE COMMENCING DEMOLITION.
11. CONTRACTOR SHALL SUPPLY AND MAINTAIN FOR THE DURATION OF DEMOLITION ALL NECESSARY DEVICES FOR EROSION, SEDIMENT AND DUST CONTROL, ETC., INCLUDING THOSE DEVICES NECESSARY FOR STOCKPILES AND PROTECTION OF ADJACENT PUBLIC WAYS, AND SHALL REMOVE THE DEVICES AFTER PROJECT COMPLETION.
12. THE CONTRACTOR SHALL BE RESPONSIBLE TO COORDINATE HIS EFFORTS OF THE DEMOLITION AND RELATION OF UTILITIES WITH ALL TRADES, IF APPLICABLE.
13. ALL ITEMS REQUIRING REMOVAL SHALL BE REMOVED TO FULL DEPTH TO INCLUDE BASE MATERIAL AND FOOTINGS OR FOUNDATIONS AS APPLICABLE, AND LEGALLY DISPOSED OF OFFSITE BY CONTRACTOR.
14. UTILITY PIPES DESIGNATED TO BE ABANDONED IN PLACE SHALL CONFORM TO THE CITY OF NEW BEDFORD STANDARDS.
15. UTILITY PIPES DESIGNATED TO BE REMOVED SHALL CONSIST OF THE COMPLETE REMOVAL AND DISPOSAL OF THE ENTIRE LENGTH OF PIPE AND BACKFILL AND 95% COMPACTION OF THE VOID WITH ORDINARY BORROW.
16. UTILITY STRUCTURES DESIGNATED TO BE ABANDONED IN PLACE SHALL HAVE THEIR CAST IRON CASTINGS REMOVED AND DISPOSED, INLET AND OUTLET PIPES PLUGGED, THE BOTTOM OF THE STRUCTURES SHALL BE BROKEN, THE VOID OF THE STRUCTURES SHALL BE BACKFILLED AND COMPACTED TO 95% WITH ORDINARY BORROW, AND THE TOP OF THE STRUCTURE SHALL BE REMOVED SO THAT IT IS AT LEAST 36 INCHES BELOW FINISH GRADE.
17. UTILITY STRUCTURES DESIGNATED TO BE REMOVED SHALL CONSIST OF THE REMOVAL AND DISPOSAL OF CAST IRON CASTINGS, PLUGGING OF INLET AND OUTLET PIPES, REMOVAL OF THE STRUCTURE, AND BACKFILL AND 95% COMPACTION OF THE VOID WITH ORDINARY BORROW.
18. TREE AND SHRUB PROTECTION SEE LANDSCAPE ARCHITECT DRAWINGS AND SPECIFICATIONS.
19. ALL EXISTING TREES AND SHRUBS TO REMAIN SHALL BE PROTECTED, AND MAINTAINED THROUGHOUT THE TIME OF CONSTRUCTION, AS SPECIFIED AND DIRECTED BY THE LANDSCAPE ARCHITECT.
20. AT ALL LOCATIONS WHERE EXISTING CURBING, CONCRETE PAVEMENT OR BITUMINOUS CONCRETE ROADWAY ABUTS NEW CONSTRUCTION, THE EDGE OF THE EXISTING CURB OR PAVEMENT SHALL BE SAW CUT TO A CLEAN, SMOOTH EDGE.
21. REMOVE ALL SITE FURNISHINGS REQUIRED TO CONSTRUCT NEW BUILDING AND SITE IMPROVEMENTS.
22. SEE LEGEND, DETAILS, AND ADDITIONAL NOTES ON SHEET C-200A.

SMAST II, University of Massachusetts, Dartmouth

Umass Building Authority (UMBA)
Project Number 11-D1

Hill International, Inc. Owner's Project Manager	330 Congress Street, Boston, MA 02210 T 617 778-0900
Ellenzweig Architects | Planners	**230 Congress Street Boston, MA 02110 T 617 491-5575 F 617 868-2318**
Lin Associates, Inc. Structural Engineer	2001 Beacon Street, Brighton, MA 02135 T 617 566-4216
BR+A Consulting Engineers MEP/IT/Security Engineer	10 Guest Street Boston, MA 02135 T 617 254-0016 F 617 924-9339
Fernandez & Associates Fire Protection Engineer	63 Larkin Road Byfield, MA 01922 T 978 499-0172 F 978 465-2371
TAG Engineering LLC Seawater Systems Consultant	P.O. Box 558 Woods Hole, MA 02543 T 508 362-0561
Nitsch Engineering Civil Engineer	2 Center Plaza, No.430 Boston, MA 02108 T 617 338-0063
Horiuchi Solien Landscape Architect	P.O. Box 914, 200 Main St. Falmouth, MA 02541 T 508 540-5320 F 508 540-8651
GZA GeoEnvironmental Geo-Environmental	133 Federal St. Boston, MA 02110 T 617 963-1000 F 617 4482-6868
Pieszak Lighting Design Lighting Design	123 Davis Ave. Brookline, MA 02445 T 617 335-8597

Notes:

N

Keyplan

Project Number:	31206
Drawing By:	MLC
Checked By:	DMC
Filename:	
Issue Date:	02/10/2016

Revisions:

No.	Date	Description

Construction Documents Progress Set

Phase 1 Erosion Control and Utility Demolition Plan (SMAST 2)

Construction Documents
Scale: AS NOTED

COMMONWEALTH OF MASSACHUSETTS
DAVID M. CONWAY
CIVIL
No. 40069
PROFESSIONAL ENGINEER
2/26/16

C-000

2016 Ellenzweig

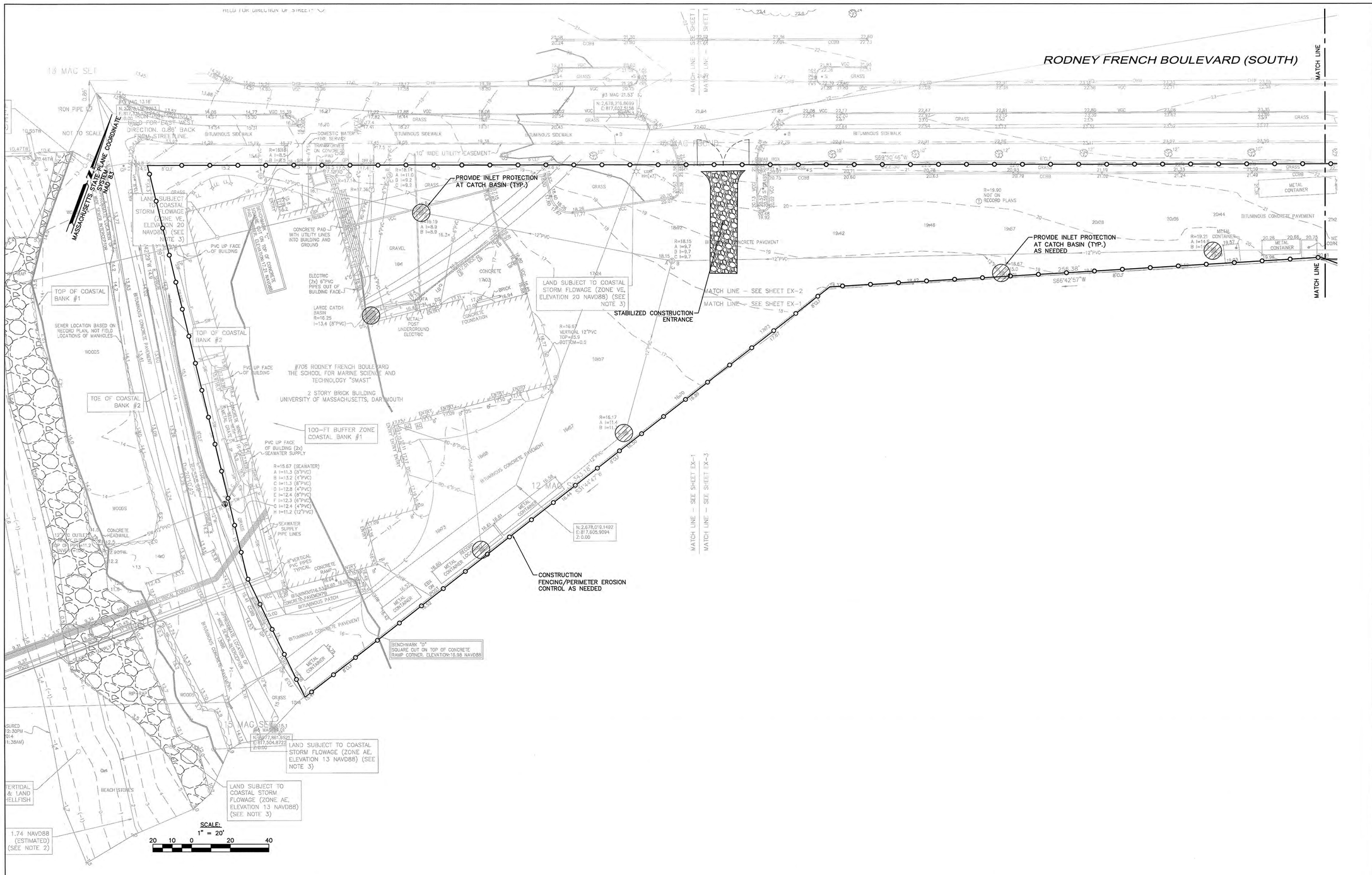

LEGEND

- EROSION CONTROL BARRIER
- CONSTRUCTION FENCE
- INLET PROTECTION (PROVIDE ON ALL EXISTING AND PROPOSED CATCH BASINS AND AREA DRAINS)
- LIMIT OF WORK
- STABILIZED CONSTRUCTION ENTRANCE
- CONSTRUCTION GATE

ABBREVIATIONS

CB	CATCH BASIN
DMH	DRAIN MANHOLE
TYP	TYPICAL

J:\31206 SMAST\CADD\Current\Revit\Central File

SMAST II, University of Massachusetts, Dartmouth

Umass Building Authority (UMBA) Project Number 11-D1

Hill International, Inc. Owner's Project Manager	330 Congress Street, Boston, MA 02210 T 617 778-0900
Ellenzweig Architects | Planners	**230 Congress Street Boston, MA 02110 T 617 491-5575 F 617 868-2318**
Lin Associates, Inc. Structural Engineer	2001 Beacon Street, Brighton, MA 02135 T 617 566-4216
BR+A Consulting Engineers MEP/IT/Security Engineer	10 Guest Street Boston, MA 02135 T 617 254-0016 F 617 924-9339
Fernandez & Associates Fire Protection Engineer	63 Larkin Road Byfield, MA 01922 T 978 499-0172 F 978 465-2371
TAG Engineering LLC Seawater Systems Consultant	P.O. Box 558 Woods Hole, MA 02543 T 508 362-0561
Nitsch Engineering Civil Engineer	2 Center Plaza, No.430 Boston, MA 02108 T 617 338-0063
Horiuchi Solien Landscape Architect	P.O. Box 914, 200 Main St. Falmouth, MA 02541 T 508 540-5320 F 508 540-8651
GZA GeoEnvironmental Geo-Environmental	133 Federal St. Boston, MA 02110 T 617 963-1000 F 617 4482-6868
Pieszak Lighting Design Lighting Design	123 Davis Ave. Brookline, MA 02445 T 617 335-8597

Notes:

N

Keyplan

Project Number:	31206
Drawing By:	MLC
Checked By:	DMC
Filename:	
Issue Date:	02/10/2016

Revisions:

No.	Date	Description

Construction Documents Progress Set

Phase 2 Erosion Control Plan (SMAST 1)

Construction Documents
Scale: AS NOTED

COMMONWEALTH OF MASSACHUSETTS DAVID M. CONWAY CIVIL No. 40566 REGISTERED PROFESSIONAL ENGINEER 02/10/16

C-100A

2016 Ellenzweig©

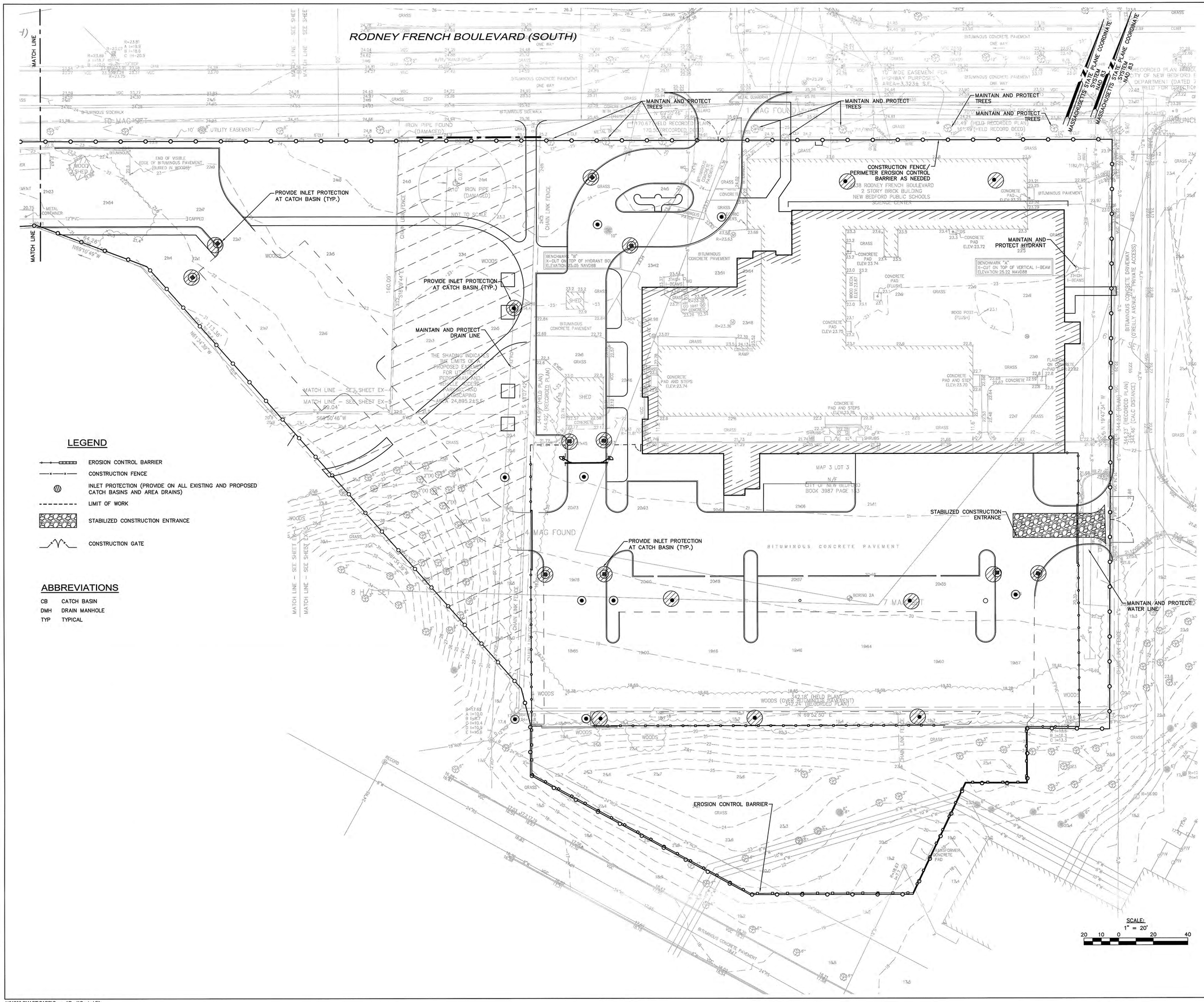

LEGEND

- EROSION CONTROL BARRIER
- CONSTRUCTION FENCE
- INLET PROTECTION (PROVIDE ON ALL EXISTING AND PROPOSED CATCH BASINS AND AREA DRAINS)
- LIMIT OF WORK
- STABILIZED CONSTRUCTION ENTRANCE
- CONSTRUCTION GATE

ABBREVIATIONS

CB	CATCH BASIN
DMH	DRAIN MANHOLE
TYP	TYPICAL

SMAST II, University of Massachusetts, Dartmouth

Umass Building Authority (UMBA) Project Number 11-D1

Hill International, Inc. Owner's Project Manager	330 Congress Street, Boston, MA 02210 T 617 778-0900
Ellenzweig Architects | Planners	**230 Congress Street Boston, MA 02110 T 617 491-5575 F 617 868-2318**
Lin Associates, Inc. Structural Engineer	2001 Beacon Street, Brighton, MA 02135 T 617 566-4216
BR+A Consulting Engineers MEP/IT/Security Engineer	10 Guest Street Boston, MA 02135 T 617 254-0016 F 617 924-9339
Fernandez & Associates Fire Protection Engineer	63 Larkin Road Byfield, MA 01922 T 978 499-0172 F 978 465-2371
TAG Engineering LLC Seawater Systems Consultant	P.O. Box 558 Woods Hole, MA 02543 T 508 362-0561
Nitsch Engineering Civil Engineer	2 Center Plaza, No.430 Boston, MA 02108 T 617 338-0063
Horiuchi Solien Landscape Architect	P.O. Box 914, 200 Main St. Falmouth, MA 02541 T 508 540-5320 F 508 540-8651
GZA GeoEnvironmental Geo-Environmental	133 Federal St. Boston, MA 02110 T 617 963-1000 F 617 4482-6868
Pleszak Lighting Design Lighting Design	123 Davis Ave. Brookline, MA 02445 T 617 335-8597

Notes:

Keyplan

Project Number:	31206
Drawing By:	MLC
Checked By:	DMC
Filename:	
Issue Date:	02/10/2016

Revisions:

No.	Date	Description

Construction Documents Progress Set

Phase 2 Erosion Control Plan (SMAST 2)

Construction Documents
Scale: AS NOTED

COMMONWEALTH OF MASSACHUSETTS
DAVID M. CONWAY
CIVIL
No. 40065
REGISTERED PROFESSIONAL ENGINEER
2/10/16

C-100B

J:\31206 SMAST\CADD\Current\Revit\Central File

2016 Ellenzweig©

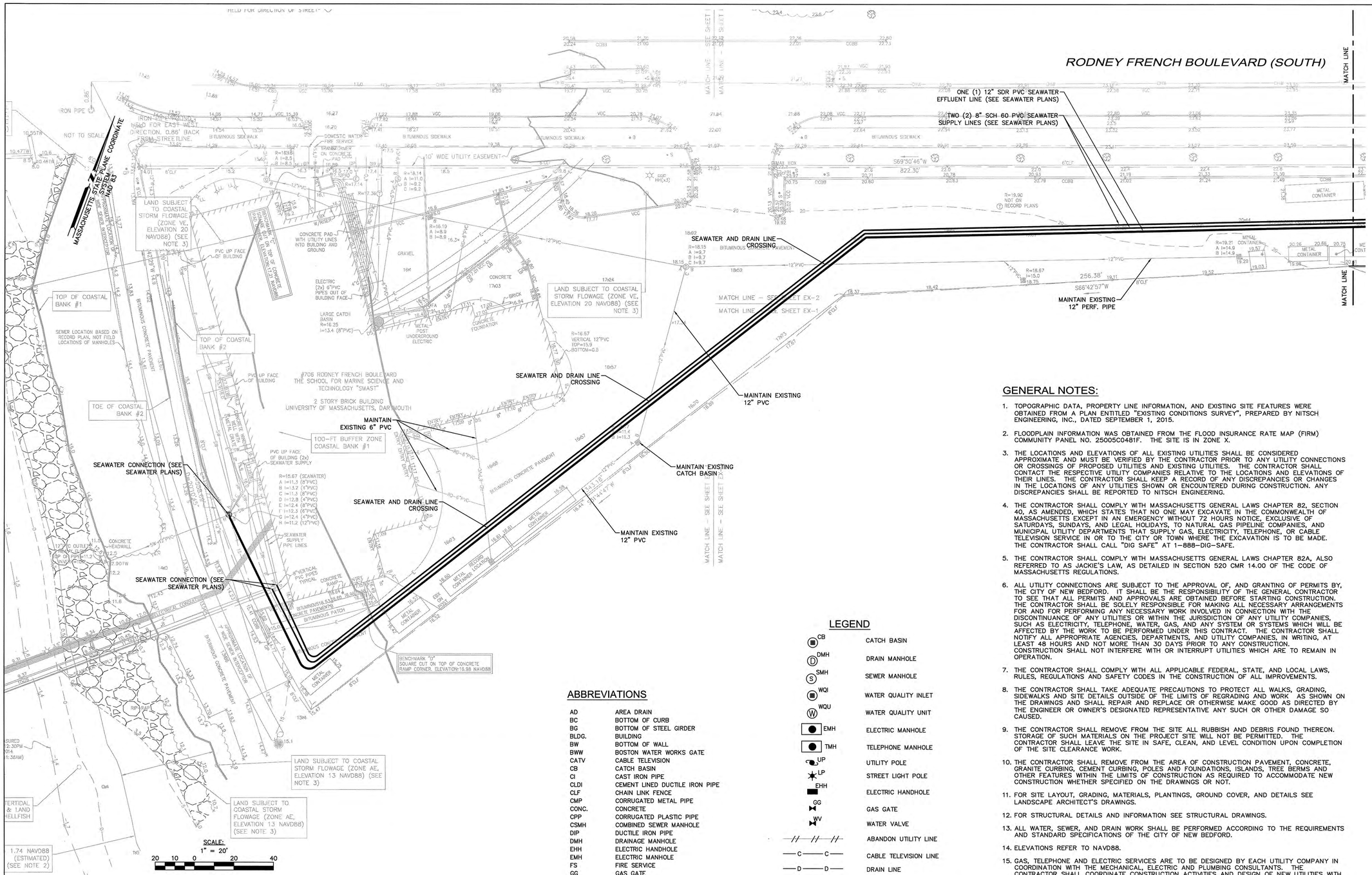

GENERAL NOTES:

1. TOPOGRAPHIC DATA, PROPERTY LINE INFORMATION, AND EXISTING SITE FEATURES WERE OBTAINED FROM A PLAN ENTITLED "EXISTING CONDITIONS SURVEY", PREPARED BY NITSCH ENGINEERING, INC., DATED SEPTEMBER 1, 2015.
2. FLOODPLAIN INFORMATION WAS OBTAINED FROM THE FLOOD INSURANCE RATE MAP (FIRM) COMMUNITY PANEL NO. 25005C0481F. THE SITE IS IN ZONE X.
3. THE LOCATIONS AND ELEVATIONS OF ALL EXISTING UTILITIES SHALL BE CONSIDERED APPROXIMATE AND MUST BE VERIFIED BY THE CONTRACTOR PRIOR TO ANY UTILITY CONNECTIONS OR CROSSINGS OF PROPOSED UTILITIES AND EXISTING UTILITIES. THE CONTRACTOR SHALL CONTACT THE RESPECTIVE UTILITY COMPANIES RELATIVE TO THE LOCATIONS AND ELEVATIONS OF THEIR LINES. THE CONTRACTOR SHALL KEEP A RECORD OF ANY DISCREPANCIES OR CHANGES IN THE LOCATIONS OF ANY UTILITIES SHOWN OR ENCOUNTERED DURING CONSTRUCTION. ANY DISCREPANCIES SHALL BE REPORTED TO NITSCH ENGINEERING.
4. THE CONTRACTOR SHALL COMPLY WITH MASSACHUSETTS GENERAL LAWS CHAPTER 82, SECTION 40, AS AMENDED, WHICH STATES THAT NO ONE MAY EXCAVATE IN THE COMMONWEALTH OF MASSACHUSETTS EXCEPT IN AN EMERGENCY WITHOUT 72 HOURS NOTICE, EXCLUSIVE OF SATURDAYS, SUNDAYS, AND LEGAL HOLIDAYS, TO NATURAL GAS PIPELINE COMPANIES, AND MUNICIPAL UTILITY DEPARTMENTS THAT SUPPLY GAS, ELECTRICITY, TELEPHONE, OR CABLE TELEVISION SERVICE IN OR TO THE CITY OR TOWN WHERE THE EXCAVATION IS TO BE MADE. THE CONTRACTOR SHALL CALL "DIG SAFE" AT 1-888-DIG-SAFE.
5. THE CONTRACTOR SHALL COMPLY WITH MASSACHUSETTS GENERAL LAWS CHAPTER 82A, ALSO REFERRED TO AS JACKIE'S LAW, AS DETAILED IN SECTION 520 CMR 14.00 OF THE CODE OF MASSACHUSETTS REGULATIONS.
6. ALL UTILITY CONNECTIONS ARE SUBJECT TO THE APPROVAL OF, AND GRANTING OF PERMITS BY, THE CITY OF NEW BEDFORD. IT SHALL BE THE RESPONSIBILITY OF THE GENERAL CONTRACTOR TO SEE THAT ALL PERMITS AND APPROVALS ARE OBTAINED BEFORE STARTING CONSTRUCTION. THE CONTRACTOR SHALL BE SOLELY RESPONSIBLE FOR MAKING ALL NECESSARY ARRANGEMENTS FOR AND FOR PERFORMING ANY NECESSARY WORK INVOLVED IN CONNECTION WITH THE DISCONTINUANCE OF ANY UTILITIES OR WITHIN THE JURISDICTION OF ANY UTILITY COMPANIES, SUCH AS ELECTRICITY, TELEPHONE, WATER, GAS, AND ANY SYSTEM OR SYSTEMS WHICH WILL BE AFFECTED BY THE WORK TO BE PERFORMED UNDER THIS CONTRACT. THE CONTRACTOR SHALL NOTIFY ALL APPROPRIATE AGENCIES, DEPARTMENTS, AND UTILITY COMPANIES, IN WRITING, AT LEAST 48 HOURS AND NOT MORE THAN 30 DAYS PRIOR TO ANY CONSTRUCTION. CONSTRUCTION SHALL NOT INTERFERE WITH OR INTERRUPT UTILITIES WHICH ARE TO REMAIN IN OPERATION.
7. THE CONTRACTOR SHALL COMPLY WITH ALL APPLICABLE FEDERAL, STATE, AND LOCAL LAWS, RULES, REGULATIONS AND SAFETY CODES IN THE CONSTRUCTION OF ALL IMPROVEMENTS.
8. THE CONTRACTOR SHALL TAKE ADEQUATE PRECAUTIONS TO PROTECT ALL WALKS, GRADING, SIDEWALKS AND SITE DETAILS OUTSIDE OF THE LIMITS OF REGRADING AND WORK AS SHOWN ON THE DRAWINGS AND SHALL REPAIR AND REPLACE OR OTHERWISE MAKE GOOD AS DIRECTED BY THE ENGINEER OR OWNER'S DESIGNATED REPRESENTATIVE ANY SUCH OR OTHER DAMAGE SO CAUSED.
9. THE CONTRACTOR SHALL REMOVE FROM THE SITE ALL RUBBISH AND DEBRIS FOUND THEREON. STORAGE OF SUCH MATERIALS ON THE PROJECT SITE WILL NOT BE PERMITTED. THE CONTRACTOR SHALL LEAVE THE SITE IN SAFE, CLEAN, AND LEVEL CONDITION UPON COMPLETION OF THE SITE CLEARANCE WORK.
10. THE CONTRACTOR SHALL REMOVE FROM THE AREA OF CONSTRUCTION PAVEMENT, CONCRETE, GRANITE CURBING, CEMENT CURBING, POLES AND FOUNDATIONS, ISLANDS, TREE BERMS AND OTHER FEATURES WITHIN THE LIMITS OF CONSTRUCTION AS REQUIRED TO ACCOMMODATE NEW CONSTRUCTION WHETHER SPECIFIED ON THE DRAWINGS OR NOT.
11. FOR SITE LAYOUT, GRADING, MATERIALS, PLANTINGS, GROUND COVER, AND DETAILS SEE LANDSCAPE ARCHITECT'S DRAWINGS.
12. FOR STRUCTURAL DETAILS AND INFORMATION SEE STRUCTURAL DRAWINGS.
13. ALL WATER, SEWER, AND DRAIN WORK SHALL BE PERFORMED ACCORDING TO THE REQUIREMENTS AND STANDARD SPECIFICATIONS OF THE CITY OF NEW BEDFORD.
14. ELEVATIONS REFER TO NAVD88.
15. GAS, TELEPHONE AND ELECTRIC SERVICES ARE TO BE DESIGNED BY EACH UTILITY COMPANY IN COORDINATION WITH THE MECHANICAL, ELECTRIC AND PLUMBING CONSULTANTS. THE CONTRACTOR SHALL COORDINATE CONSTRUCTION ACTIVITIES AND DESIGN OF NEW UTILITIES WITH ELECTRIC, CABLE TELEVISION AND TELECOMMUNICATION UTILITIES.
16. INSTALL WATER LINES WITH A MINIMUM OF FIVE FEET OF COVER AND A MAXIMUM OF SEVEN FEET.
17. MAINTAIN 10 FEET HORIZONTAL SEPARATION AND 18" VERTICAL SEPARATION (WATER OVER SEWER) BETWEEN SEWER AND WATER LINES. WHEREVER THERE IS LESS THAN 10 FEET OF HORIZONTAL SEPARATION AND 18" OF VERTICAL SEPARATION BETWEEN A PROPOSED OR EXISTING SEWER LINE TO REMAIN AND A PROPOSED OR EXISTING WATER LINE TO REMAIN BOTH WATER MAIN AND SEWER MAIN SHALL BE CONSTRUCTED OF MECHANICAL JOINT CEMENT LINED DUCTILE IRON PIPE FOR A DISTANCE OF 10-FEET ON EITHER SIDE OF THE CROSSING. ONE (1) FULL LENGTH OF WATER PIPE SHALL BE CENTERED OVER THE SEWER AT THE CROSSING.
18. UTILITY STRUCTURES TO BE ABANDONED SHALL BE REMOVED TO A DEPTH OF NO LESS THAN 3 FEET BELOW FINISHED GRADE, THE BOTTOMS OF THE STRUCTURES SHALL BE BROKEN AND THE STRUCTURES SHALL BE BACKFILLED WITH GRAVEL BORROW AND COMPACTED.
19. CONTRACTOR SHALL MAINTAIN ALL EXISTING UTILITIES EXCEPT THOSE NOTED TO BE ABANDONED OR REMOVED & DISPOSED.
20. THE GENERAL CONTRACTOR IS RESPONSIBLE FOR TRENCHING, BACKFILLING, AND SURFACE RESTORATION FOR THE GAS LINE INSTALLATION.
21. FOR SOIL INFORMATION REFER TO GEOTECHNICAL REPORT.
22. ALL GRATES IN WALKWAYS SHALL BE ADA COMPLIANT.

LEGEND

CB	CATCH BASIN
DMH	DRAIN MANHOLE
SMH	SEWER MANHOLE
WQI	WATER QUALITY INLET
WQU	WATER QUALITY UNIT
EMH	ELECTRIC MANHOLE
TMH	TELEPHONE MANHOLE
UP	UTILITY POLE
LP	STREET LIGHT POLE
EHH	ELECTRIC HANDHOLE
GG	GAS GATE
WV	WATER VALVE
	ABANDON UTILITY LINE
C — C	CABLE TELEVISION LINE
D — D	DRAIN LINE
E — E	UNDERGROUND ELECTRIC LINE
G — G	GAS LINE
S — S	SEWER LINE
T — T	TELEPHONE/DATA LINE
W — W	WATER LINE
OHW — OHW	OVERHEAD WIRES
TS — TS	TRAFFIC SIGNAL LINE
	EDGE OF TREES
X — X	CHAIN LINK FENCE
	STONE WALL
	CUT & CAP UTILITY LINE
TW: 147.50 BW: 137.50	TOP OF WALL ELEVATION BOTTOM OF WALL ELEVATION
+148.55	SPOT ELEVATION
	TEST BORING
30	NUMBER OF PARKING SPACES

ABBREVIATIONS

AD	AREA DRAIN
BC	BOTTOM OF CURB
BG	BOTTOM OF STEEL GIRDER
BLDG.	BUILDING
BW	BOTTOM OF WALL
BWW	BOSTON WATER WORKS GATE
CATV	CABLE TELEVISION
CB	CATCH BASIN
CI	CAST IRON PIPE
CLDI	CEMENT LINED DUCTILE IRON PIPE
CLF	CHAIN LINK FENCE
CMP	CORRUGATED METAL PIPE
CONC.	CONCRETE
CPP	CORRUGATED PLASTIC PIPE
CSMH	COMBINED SEWER MANHOLE
DIP	DUCTILE IRON PIPE
DMH	DRAINAGE MANHOLE
EHH	ELECTRIC HANDHOLE
EMH	ELECTRIC MANHOLE
FS	FIRE SERVICE
GG	GAS GATE
GV	GAS VALVE
HP	HORSEPOWER
HYD	HYDRANT
I	INVERT ELEVATION
LF	LINEAR FEET
LOC.	LOCATION
LP	STREET LIGHT POLE
OHW	OVERHEAD WIRE
PVC	POLYVINYL CHLORIDE PIPE
R	RIM ELEVATION
RCP	REINFORCED CONCRETE PIPE
REC.	RECORD
SH	SPRINKLER HEAD
SMH	SEWER MANHOLE
TC	TOP OF CURB
TG	TOP OF STEEL GIRDER
TMH	TELEPHONE MANHOLE
TR	TOP OF RAIL ELEVATION
TW	TOP OF WALL
TYP.	TYPICAL
UP	UTILITY POLE
VCP	VITRIFIED CLAY PIPE
WG	WATER GATE
WV	WATER VALVE
W/	WITH
W/O	WITHOUT

SMAST II, University of Massachusetts, Dartmouth

Umass Building Authority (UMBA) Project Number 11-D1

Hill International, Inc. Owner's Project Manager	330 Congress Street, Boston, MA 02210 T 617 778-0900
Ellenzweig Architects | Planners	**230 Congress Street Boston, MA 02110 T 617 491-5575 F 617 868-2318**
Lin Associates, Inc. Structural Engineer	2001 Beacon Street, Brighton, MA 02135 T 617 566-4216
BR+A Consulting Engineers MEP/IT/Security Engineer	10 Guest Street Boston, MA 02135 T 617 254-0016 F 617 924-9339
Fernandez & Associates Fire Protection Engineer	63 Larkin Road Byfield, MA 01922 T 978 499-0172 F 978 465-2371
TAG Engineering LLC Seawater Systems Consultant	P.O. Box 558 Woods Hole, MA 02543 T 508 362-0561
Nitsch Engineering Civil Engineer	2 Center Plaza, No.430 Boston, MA 02108 T 617 338-0063
Horiuchi Solien Landscape Architect	P.O. Box 914, 200 Main St. Falmouth, MA 02541 T 508 540-5320 F 508 540-8651
GZA GeoEnvironmental Geo-Environmental	133 Federal St. Boston, MA 02110 T 617 963-1000 F 617 4482-6868
Pleszak Lighting Design Lighting Design	123 Davis Ave. Brookline, MA 02445 T 617 335-8597

Notes:

Keyplan

Project Number:	31206
Drawing By:	MLC
Checked By:	DMC
Filename:	
Issue Date:	02/10/2016

Revisions:

No.	Date	Description

Construction Documents Progress Set

Site Utility Plan (SMAST 1)

COMMONWEALTH OF MASSACHUSETTS DAVID M. CONWAY CIVIL No. 40069 REGISTERED PROFESSIONAL ENGINEER 2/25/16

Construction Documents
Scale: AS NOTED

C-200A

J:\31206 SMAST\CADD\Current\Revit\Central File

2016 Ellenzweig©

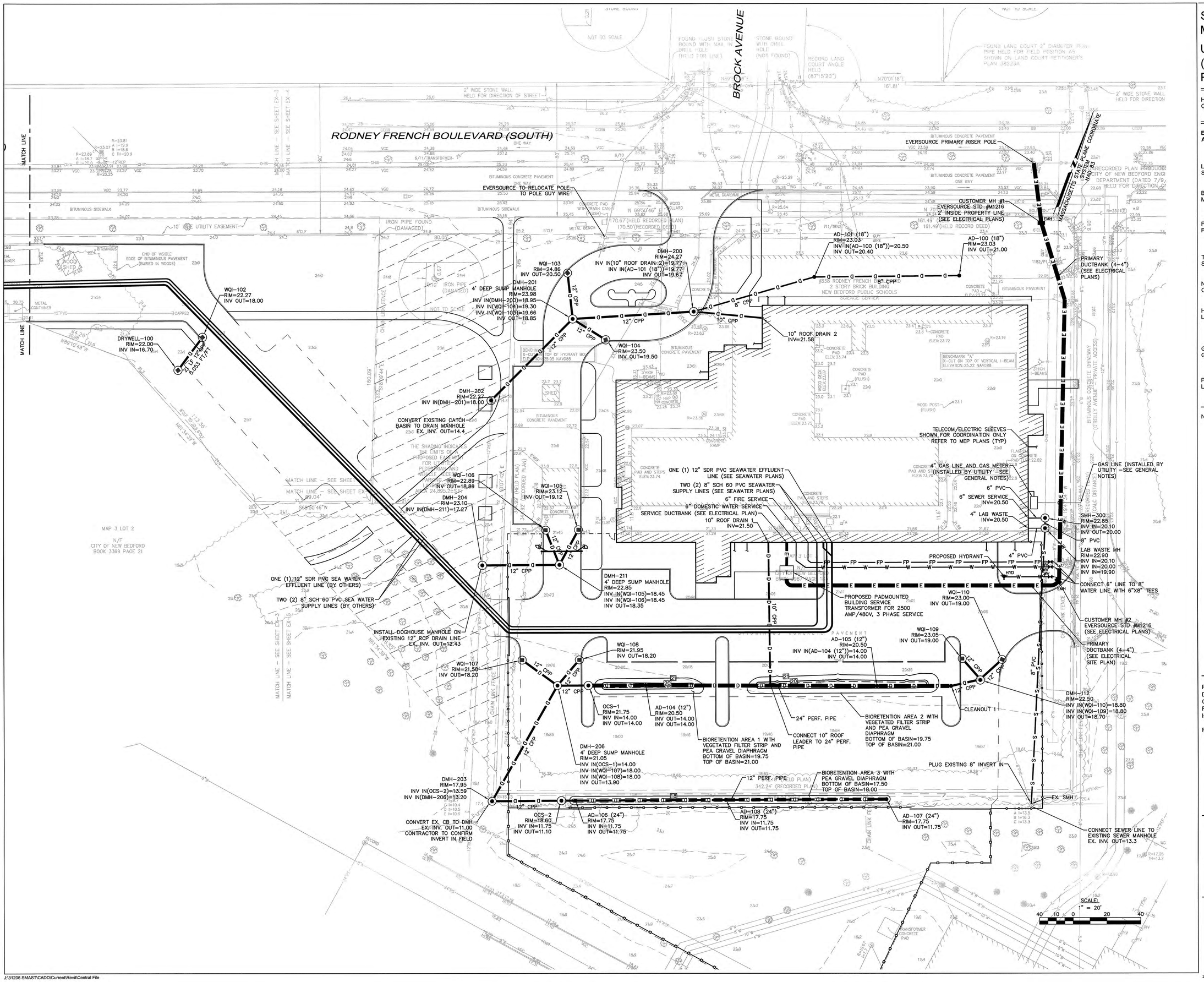

SMAST II, University of Massachusetts, Dartmouth

Umass Building Authority (UMBA)
Project Number 11-D1

Hill International, Inc. Owner's Project Manager	330 Congress Street, Boston, MA 02210 T 617 778-0900
Ellenzweig Architects | Planners	**230 Congress Street Boston, MA 02110 T 617 491-5575 F 617 868-2318**
Lin Associates, Inc. Structural Engineer	2001 Beacon Street, Brighton, MA 02135 T 617 566-4216
BR+A Consulting Engineers MEP/IT/Security Engineer	10 Guest Street Boston, MA 02135 T 617 254-0016 F 617 924-9339
Fernandez & Associates Fire Protection Engineer	63 Larkin Road Byfield, MA 01922 T 978 499-0172 F 978 465-2371
TAG Engineering LLC Seawater Systems Consultant	P.O. Box 558 Woods Hole, MA 02543 T 508 362-0561
Nitsch Engineering Civil Engineer	2 Center Plaza, No.430 Boston, MA 02108 T 617 338-0063
Horiuchi Solien Landscape Architect	P.O. Box 914, 200 Main St. Falmouth, MA 02541 T 508 540-5320 F 508 540-8651
GZA GeoEnvironmental Geo-Environmental	133 Federal St. Boston, MA 02110 T 617 963-1000 F 617 4482-6868
Pleszak Lighting Design Lighting Design	123 Davis Ave. Brookline, MA 02445 T 617 335-8597

Notes:

N

Keyplan

Project Number: 31206
Drawing By: MLC
Checked By: DMC
Filename:
Issue Date: 02/10/2016

Revisions:

No.	Date	Description

Construction Documents Progress Set

Site Utility Plan (SMAST 2)

COMMONWEALTH OF MASSACHUSETTS DAVID M. CONWAY CIVIL No. 40063 REGISTERED PROFESSIONAL ENGINEER 2/10/16

Construction Documents
Scale: AS NOTED

C-200B

J:\31206 SMAST\CADD\Current\Revit\Central File

2016 Ellenzweig©

SEDIMENTATION AND EROSION CONTROL NOTES

1. ALL EROSION AND SEDIMENT CONTROL MEASURES ARE TO BE CONSTRUCTED AND MAINTAINED IN ACCORDANCE WITH PUBLISHED EROSION CONTROL AND SEDIMENT GUIDELINES FOR MASSACHUSETTS (SEE REFERENCE BELOW, NOTE #7).
2. ANY EROSION AND SEDIMENT CONTROL MEASURES FOR THE STABILIZATION OF SLOPES ARE TEMPORARY FOR CONSTRUCTION PHASES ONLY.
3. SEDIMENT CONTROL MEASURES SHALL BE ADJUSTED TO MEET FIELD CONDITIONS AT THE TIME OF AND DURING ALL PHASES OF CONSTRUCTION AND BE CONSTRUCTED PRIOR TO AND IMMEDIATELY AFTER ANY GRADING OR DISTURBANCE OF EXISTING SURFACE MATERIAL ON THE SITE.
4. PERIODIC INSPECTION AND MAINTENANCE OF ALL SEDIMENT CONTROL STRUCTURES SHALL BE PROVIDED TO ENSURE THAT THE INTENDED PURPOSE IS ACCOMPLISHED. THE CONTRACTOR SHALL BE RESPONSIBLE FOR ALL SEDIMENT LEAVING THE LIMIT OF WORK. SEDIMENT CONTROL MEASURES SHALL BE IN WORKING CONDITION AT THE END OF EACH WORKING DAY.
5. ALL POINTS OF CONSTRUCTION INGRESS OR EGRESS WILL BE PROTECTED WITH A STABILIZED CONSTRUCTION ENTRANCE TO PREVENT TRACKING OF MUD ONTO PUBLIC WAYS.
6. ALL SEDIMENT WILL BE PREVENTED FROM ENTERING ANY STORM DRAINAGE SYSTEM (I.E. THROUGH THE USE OF STRAW BALES, CATCH BASIN SEDIMENT TRAPS, GRAVEL, BOARDS OR OTHER APPLICABLE METHODS).
7. THE CONTRACTOR INSTALLING THE ABOVE SHALL OBTAIN AND FOLLOW THE "MASSACHUSETTS EROSION AND SEDIMENT CONTROL GUIDELINES FOR URBAN AND SUBURBAN AREAS" PREPARED BY DEPARTMENT OF ENVIRONMENTAL PROTECTION, BUREAU OF RESOURCE PROTECTION, DATED MAY 1997, REPRINTED MAY 2003 (OR LATEST EDITION) AND THE 2012 NPDES GENERAL PERMIT FOR STORMWATER DISCHARGES FROM CONSTRUCTION ACTIVITIES, OR LATEST EDITION.
8. ALL DRAINAGE SWALES AND GROUND SURFACES WITHIN THE LIMIT OF WORK SHALL BE PROTECTED.
9. AFTER ANY SIGNIFICANT RAINFALL (0.25" OR GREATER), SEDIMENT CONTROL STRUCTURES SHALL BE INSPECTED FOR INTEGRITY. ANY DAMAGED DEVICES SHALL BE CORRECTED IMMEDIATELY.
10. ALL STOCKPILES SHALL BE PROTECTED AND LOCATED A MINIMUM OF 100' AWAY FROM EXISTING WATER BODIES OR WETLANDS & WITHIN THE LIMIT OF WORK. SOIL STOCKPILES SHALL BE PROTECTED FROM CONTACT WITH ONSITE STORMWATER RUNOFF USING TEMPORARY PERIMETER SEDIMENT BARRIERS. A COVER (TARP) OR APPROPRIATE TEMPORARY STABILIZATION WILL BE PROVIDED TO MINIMIZE SEDIMENT DISCHARGE.
11. STABILIZED PORTIONS OF A SITE SHALL BE INSPECTED AT LEAST ONCE PER MONTH.
12. ANY SEDIMENT TRACKED ONTO PAVED AREAS SHALL BE SWEPT AT THE END OF EACH WORKING DAY.
13. ALL DEBRIS GENERATED DURING SITE PREPARATION ACTIVITIES SHALL BE LEGALLY DISPOSED OF OFF-SITE.
14. ALL TOPSOIL ENCOUNTERED WITHIN THE WORK AREA SHALL BE STRIPPED TO ITS FULL DEPTH AND STOCKPILED FOR REUSE. TOPSOIL NOT NEEDED AFTER COMPLETION OF ALL FINAL TOPSOIL SPREADING AND GRASSING SHALL BE REMOVED FROM THE SITE AND LEGALLY RECYCLED OR DISPOSED OF. TOPSOIL PILES SHALL REMAIN SEGREGATED FROM EXCAVATED SUBSURFACE SOIL MATERIALS.
15. TEMPORARY DIVERSION DITCHES, PERMANENT DITCHES, CHANNELS, EMBANKMENTS AND ANY DENUDED SURFACE WHICH WILL BE EXPOSED FOR A PERIOD OF 14 CALENDAR DAYS OR MORE SHALL BE CONSIDERED CRITICAL VEGETATION AREAS. THESE AREAS SHALL BE MULCHED WITH STRAW. MULCH SHALL BE SPREAD UNIFORMLY IN A CONTINUOUS BLANKET OF SUFFICIENT THICKNESS TO COMPLETELY HIDE THE SOIL FROM VIEW.
16. AN EROSION CONTROL BARRIER SHALL BE INSTALLED ALONG THE EDGE OF PROPOSED WORK AS REQUIRED PRIOR TO COMMENCEMENT OF DEMOLITION OR CONSTRUCTION OPERATIONS.
17. THE CONTRACTOR IS RESPONSIBLE FOR REMOVAL OF ALL EROSION AND SEDIMENT CONTROLS AT THE COMPLETION OF SITE CONSTRUCTION.
18. MEANS OF EROSION AND SEDIMENT PROTECTION AS NOTED ON THE DRAWINGS INDICATE THE MINIMUM PROVISIONS NECESSARY. ADDITIONAL MEANS OF PROTECTION SHALL BE PROVIDED BY THE CONTRACTOR AS REQUIRED FOR CONTINUED OR UNFORESEEN EROSION PROBLEMS, AT NO ADDITIONAL EXPENSE TO THE OWNER.
19. THE CONTRACTOR SHALL USE TEMPORARY SEEDING, MULCHING OR OTHER APPROVED STABILIZATION MEASURES TO PROTECT EXPOSED AREAS DURING PROLONGED CONSTRUCTION OR OTHER LAND DISTURBANCE. STOCKPILES THAT WILL BE EXPOSED FOR LONGER THAN 14 CALENDAR DAYS SHALL BE SEEDED WITH AN ANNUAL RYE.
20. SEE LANDSCAPE DRAWINGS FOR TREE PROTECTION DETAILS.

LEGEND

- EROSION CONTROL BARRIER
- CONSTRUCTION FENCE
- INLET PROTECTION (PROVIDE ON ALL EXISTING AND PROPOSED CATCH BASINS AND AREA DRAINS)
- LIMIT OF WORK
- STABILIZED CONSTRUCTION ENTRANCE
- CONSTRUCTION GATE

ABBREVIATIONS

CB	CATCH BASIN
DMH	DRAIN MANHOLE
TYP	TYPICAL

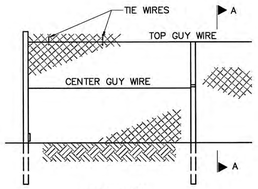

ELEVATION

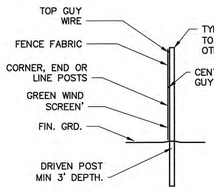

SECTION A-A

CHAIN LINK CONSTRUCTION FENCE

NOT TO SCALE

CONSTRUCTION FENCE AND GATE NOTES

1. FABRIC SHALL BE 0.148" WIRE, WOVEN INTO APPROXIMATELY 2" DIAMOND MESH.
2. THE FENCE FABRIC SHALL BE ZINC COATED STEEL OR ALUMINUM COATED STEEL.
3. FENCE POSTS SHALL RECEIVE THE SAME COATING AND TREATMENT AS THE FENCE FABRIC (DESCRIBED ABOVE).
4. THE CONTRACTOR SHALL ADD A GREEN WIND SCREEN
5. LINE POSTS SHALL BE 2½" O.D. END OR CORNER POSTS SHALL BE 3" O.D.
6. THE CONTRACTOR IS RESPONSIBLE FOR SURFACE RESTORATION ONCE THE FENCE IS REMOVED.
7. THE CONTRACTOR SHALL REMOVE AND DISPOSE OF THE TEMPORARY CONSTRUCTION FENCE AT THE CONCLUSION OF THE PROJECT.

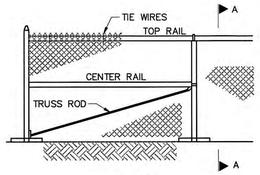

ELEVATION

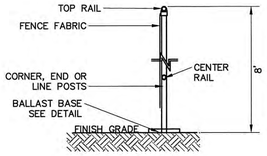

SECTION A-A

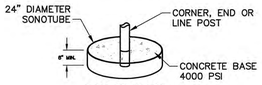

BALLAST BASE

NOTES

1. END, GATE AND CORNER POSTS SHALL BE BRACED TO ADJACENT LINE POSTS. (MORE THAN 30' CHANGE IN DIRECTION CONSTITUTES A CORNER)
2. FABRIC SHALL BE 0.148" GAUGE MIN. WIRE, WOVEN INTO APPROXIMATELY 2" DIAMOND MESH.
3. ZINC-COATED STEEL FABRIC BASE METAL SHALL BE COATED WITH PRIME WESTERN SPELTER OR EQUAL.
4. ALUMINUM COATED STEEL FABRIC BASE METAL SHALL BE COATED WITH ALUMINUM ALLOY.
5. LINE POSTS SHALL BE 2½" O.D. END OR CORNER POSTS SHALL BE 3" O.D.
6. THE CONTRACTOR IS RESPONSIBLE FOR SURFACE RESTORATION ONCE THE FENCE IS REMOVED.
7. THE CONTRACTOR SHALL REMOVE AND DISPOSE OF THE TEMPORARY CONSTRUCTION FENCE AT THE CONCLUSION OF THE PROJECT.

TEMPORARY CONSTRUCTION CHAIN LINK FENCE WITH BALLAST BASE

NOT TO SCALE

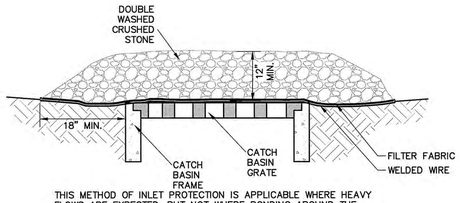

THIS METHOD OF INLET PROTECTION IS APPLICABLE WHERE HEAVY FLOWS ARE EXPECTED, BUT NOT WHERE PONDING AROUND THE STRUCTURE MIGHT CAUSE EXCESSIVE INCONVENIENCE OR DAMAGE TO ADJACENT STRUCTURES AND UNPROTECTED AREAS. THIS METHOD NOT ACCEPTABLE IN ACTIVE TRAFFIC AREAS.

INLET PROTECTION CATCH BASIN W/ GRAVEL

NOT TO SCALE

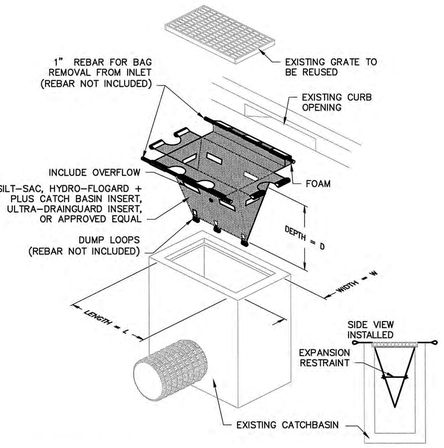

THIS METHOD OF INLET PROTECTION IS APPLICABLE WHERE THE INLET DRAINS SHEET, OVERLAND OR CONCENTRATED FLOWS (NOT GREATER THAN 1 CFS). THE METHOD CAN DRAIN FLAT AREA TO STEEP SLOPES. INLET CAPACITY WILL BE DECREASED WITH THIS METHOD AND THE CONTRACTOR SHALL EXPECT PONDING DURING HIGH FLOW EVENTS.

INLET PROTECTION CATCH BASIN W/ SILTATION SACK

NOT TO SCALE

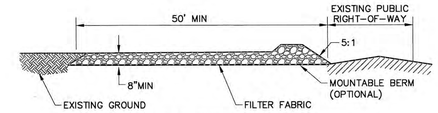

SIDE ELEVATION

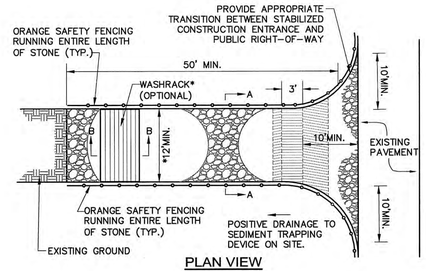

PLAN VIEW

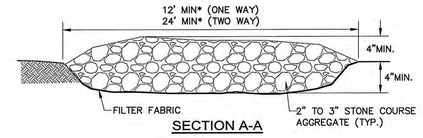

SECTION A-A

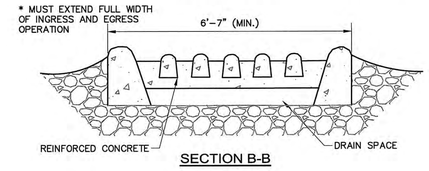

SECTION B-B

CONSTRUCTION SPECIFICATIONS

1. STONE SIZE – USE 2" TO 3" STONE.
2. LENGTH – GREATER THAN OR EQUAL TO 50 FEET
3. THICKNESS – 8"
4. WIDTH – TWELVE FOOT MINIMUM (ONE WAY), TWENTY FOUR FOOT MINIMUM (TWO WAY), BUT NOT LESS THAN THE FULL WIDTH AT POINTS WHERE INGRESS OR EGRESS OCCURS.
5. SURFACE WATER – ALL SURFACE WATER FLOWING OR DIVERTED TOWARD CONSTRUCTION ENTRANCES SHALL BE PIPED ACROSS THE ENTRANCE. IF PIPING IS IMPRACTICAL, A MOUNTABLE BERM SHALL BE PERMITTED.
6. MAINTENANCE – THE ENTRANCE SHALL BE MAINTAINED IN A CONDITION WHICH SHALL PREVENT TRACKING OR FLOWING OF SEDIMENT ONTO PUBLIC RIGHTS-OF-WAY. THIS MAY REQUIRE PERIODIC TOP DRESSING WITH ADDITIONAL STONE AS CONDITIONS DEMAND AND REPAIR OR CLEANOUT OF ANY MEASURES USED TO TRAP SEDIMENT. ALL SEDIMENT SPILLED, DROPPED, WASHED OR TRACKED ONTO PUBLIC RIGHTS-OF-WAY MUST BE REMOVED IMMEDIATELY.
7. PERIODIC INSPECTION AND NEEDED MAINTENANCE SHALL BE PROVIDED.

STABILIZED CONSTRUCTION ENTRANCE

NOT TO SCALE

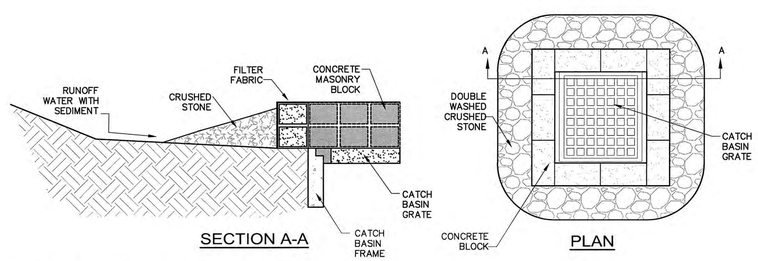

SECTION A-A

PLAN

THIS METHOD OF INLET PROTECTION IS APPLICABLE WHERE HEAVY FLOWS ARE EXPECTED AND WHERE AN OVERFLOW CAPACITY IS NECESSARY TO PREVENT EXCESSIVE PONDING AROUND STRUCTURE.

INLET PROTECTION CATCH BASIN W/ BLOCK AND GRAVEL

NOT TO SCALE

SMAST II, University of Massachusetts, Dartmouth

Umass Building Authority (UMBA)
Project Number 11-D1

Hill International, Inc. Owner's Project Manager	330 Congress Street, Boston, MA 02210 T 617 778-0900
Ellenzweig Architects | Planners	**230 Congress Street Boston, MA 02110 T 617 491-5575 F 617 868-2318**
Lin Associates, Inc. Structural Engineer	2001 Beacon Street, Brighton, MA 02135 T 617 566-4216
BR+A Consulting Engineers MEP/IT/Security Engineer	10 Guest Street Boston, MA 02135 T 617 254-0016 F 617 924-9339
Fernandez & Associates Fire Protection Engineer	63 Larkin Road Byfield, MA 01922 T 978 499-0172 F 978 465-2371
TAG Engineering LLC Seawater Systems Consultant	P.O. Box 558 Woods Hole, MA 02543 T 508 362-0561
Nitsch Engineering Civil Engineer	2 Center Plaza, No.430 Boston, MA 02108 T 617 338-0063
Horiuchi Solien Landscape Architect	P.O. Box 914, 200 Main St. Falmouth, MA 02541 T 508 540-5320 F 508 540-8651
GZA GeoEnvironmental Geo-Environmental	133 Federal St. Boston, MA 02110 T 617 963-1000 F 617 4482-6868
Pieszak Lighting Design Lighting Design	123 Davis Ave. Brookline, MA 02445 T 617 335-8597

Notes:

N

Keyplan

Project Number: 31206
Drawing By: MLC
Checked By: DMC
Filename:
Issue Date: 02/10/2016

Revisions:

No.	Date	Description

Construction Documents Progress Set

Erosion Control Details

COMMONWEALTH OF MASSACHUSETTS DAVID M. CONWAY CIVIL No. 40999 REGISTERED PROFESSIONAL ENGINEER 02/10/16

Construction Documents
Scale: AS NOTED

C-300

J:\31206 SMAST\CADD\Current\Revit\Central File

2016 Ellenzweig©

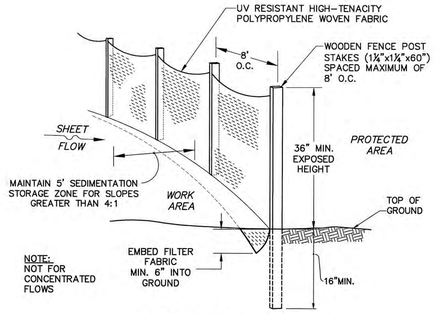

PERSPECTIVE VIEW

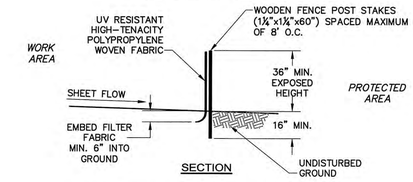

SECTION

PERIMETER PROTECTION BARRIER SILT FENCE DETAIL

NOT TO SCALE

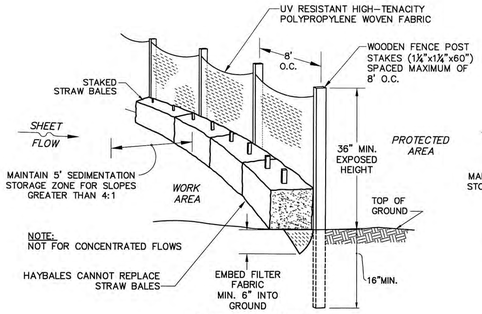

PERSPECTIVE VIEW

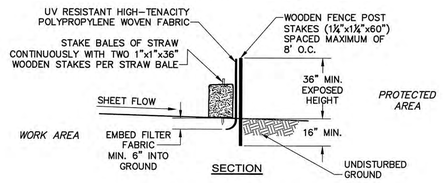

SECTION

PERIMETER PROTECTION BARRIER SILT FENCE DETAIL WITH STRAW BALE

NOT TO SCALE

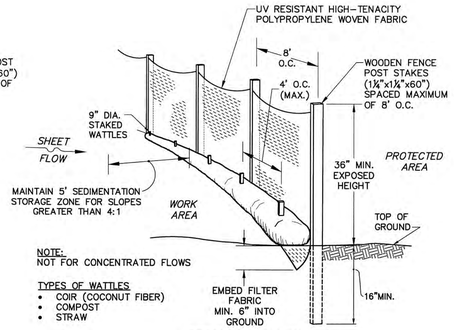

PERSPECTIVE VIEW

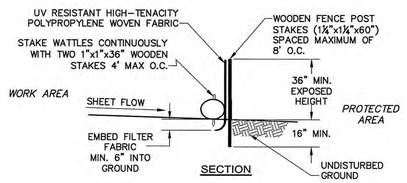

SECTION

PERIMETER PROTECTION BARRIER SILT FENCE DETAIL WITH WATTLES

NOT TO SCALE

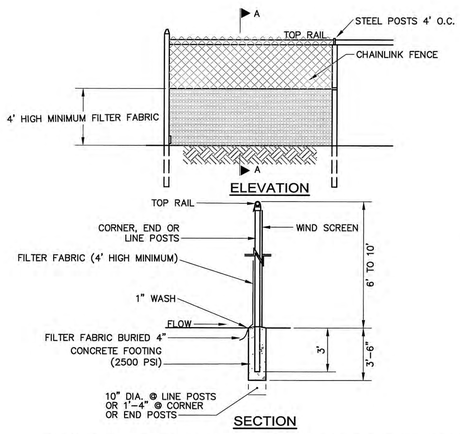

SECTION

1. CHAINLINK FENCE SHALL BE FASTENED SECURELY TO FENCE POSTS WITH WIRE TIES.
2. FILTER FABRIC SHALL BE FASTENED SECURELY TO CHAINLINK FENCE WITH TIES SPACED HORIZONTALLY 24" AS THE TOP AND MIDSECTION.
3. WHEN TWO SECTIONS OF FILTER FABIRC ADJOIN EACH OTHER, THEY SHALL BE OVERLAPPED BY 6"
4. MAINTENANCE SHALL BE PERFORMED AS NEEDED AND MATERIAL SHALL BE REMOVED WHEN SEDIMENT BUILD-UP REACHES 50% OF THE HEIGHT OF THE FILTER FABRIC.
5. MAINTENANCE OF SILT FENCE SHALL BE RECORDED TO IN THE SWPPP

EROSION CONTROL BARRIER SUPER SILT FENCE

NOT TO SCALE

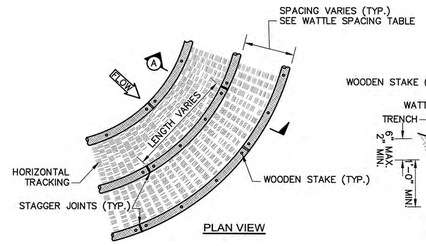

PLAN VIEW

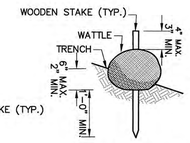

TYPICAL SECTION WATTLE DETAIL

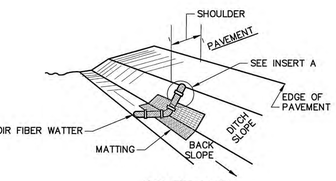

ISOMETRIC VIEW

WATTLE SPACING TABLE	
SLOPE	MAX. SPACING
1:1	10'-0"
2:1	20'-0"
3:1	30'-0"
4:1	40'-0"

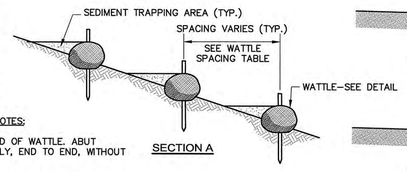

SECTION A

WATTLE SLOPE PROTECTION NOTES:

1. SECURELY KNOT EACH END OF WATTLE. ABUT ADJACENT WATTLES TIGHTLY, END TO END, WITHOUT OVERLAPPING THE ENDS.
2. PILOT HOLES MAY BE DRIVEN THROUGH THE WATTLES AND INTO THE SOIL WHEN SOIL CONDITIONS REQUIRE
3. WATTLES SHALL BE INSPECTED REGULARLY, AND IMMEDIATELY AFTER A RAINFALL PRODUCES RUNOFF, TO ENSURE THEY REMAIN THOROUGHLY ENTRENCHED AND IN CONTACT WITH THE SOIL.
4. ONLY INSTALL WATTLE(S) TO A HEIGHT IN DITCH SO FLOW WILL NOT WASH AROUND WATTLE AND SCOUR DITCH SLOPES AND AS DIRECTED.

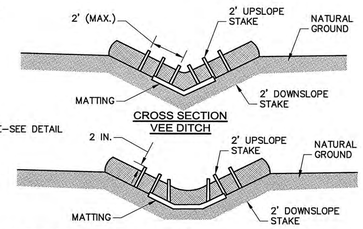

TYPES OF WATTLES
- COIR (COCONUT FIBER)
- COMPOST
- STRAW

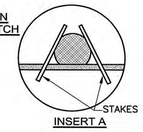

INSERT A

EROSION CONTROL BARRIER WATTLES - STEEP SLOPE PROTECTION

NOT TO SCALE

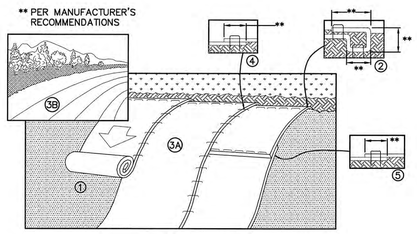

SLOPE INSTALLATION

NOTES:

1. PREPARE SOIL BEFORE INSTALLING EROSION CONTROL BLANKETS (ECB's), INCLUDING ANY NECESSARY APPLICATION OF LIME, FERTILIZER, AND SEED.
2. BEGIN AT THE TOP OF THE SLOPE BY ANCHORING THE ECB's IN ACCORDANCE WITH THE MANUFACTURER'S RECOMMENDATIONS. APPLY SEED TO COMPACTED SOIL AND FOLD REMAINING PORTION OF ECB's BACK OVER SEED AND COMPACTED SOIL. SECURE ECB's OVER COMPACTED SOIL WITH A ROW OF STAKES/STAPLES SPACED ACCORDANCE TO THE MANUFACTURER'S RECOMMENDATIONS ACROSS THE WIDTH OF THE ECB's.
3. ROLL THE ECB's DOWN (A) OR HORIZONTALLY (B) ACROSS THE SLOPE. ECB's WILL UNROLL WITH APPROPRIATE SIDE AGAINST THE SOIL SURFACE. ALL ECB's MUST BE SECURELY FASTENED TO SOIL SURFACE BY PLACING STAKES/STAPLES IN APPROPRIATE LOCATIONS AS SHOWN ON THE STAKE/STAPLE PATTERN GUIDE.
4. THE EDGES OF PARALLEL ECB's MUST BE STAKED/STAPLED WITH OVERLAP DEPENDING ON ECB's TYPE. SEE THE MANUFACTURER'S RECOMMENDATIONS.
5. CONSECUTIVE ECB's SPLICED DOWN THE SLOPE MUST BE PLACED END OVER END (SHINGLE STYLE) WITH AN OVERLAP (SEE THE MANUFACTURER'S RECOMMENDATIONS). STAKE/STAPLE THROUGH OVERLAPPED AREA, ACROSS ENTIRE ECB's WIDTH PER MANUFACTURER'S RECOMMENDATIONS.
6. IN LOOSE SOIL CONDITIONS, THE USE OF STAKE OR STAPLE LENGTHS GREATER THAN 6" MAY BE NECESSARY TO PROPERLY SECURE THE ECB's.
7. THE CONTRACTOR SHALL FOLLOW ALL INSTALLATION INSTRUCTIONS AS RECOMMENDED BY THE MANUFACTURER.

TEMPORARY EROSION CONTROL BLANKET FOR STEEP SLOPES DETAIL

NOT TO SCALE

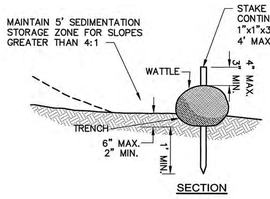

SECTION

TYPES OF WATTLES
- COIR (COCONUT FIBER)
- COMPOST
- STRAW
- DIAMETER BASED FLOW/MANUFACTURE MINIMUM DIAMETER 12" RECOMMENDATIONS

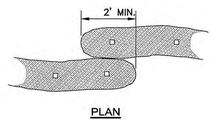

PLAN

WATTLES - SLOPE PROTECTION FOR SLOPES LESS THAN 10:1

NOT TO SCALE

SMAST II, University of Massachusetts, Dartmouth

Umass Building Authority (UMBA)
Project Number 11-D1

Hill International, Inc. Owner's Project Manager	330 Congress Street, Boston, MA 02210 T 617 778-0900
Ellenzweig Architects | Planners	**230 Congress Street Boston, MA 02110 T 617 491-5575 F 617 868-2318**
Lin Associates, Inc. Structural Engineer	2001 Beacon Street, Brighton, MA 02135 T 617 566-4216
BR+A Consulting Engineers MEP/IT/Security Engineer	10 Guest Street Boston, MA 02135 T 617 254-0016 F 617 924-9339
Fernandez & Associates Fire Protection Engineer	63 Larkin Road Byfield, MA 01922 T 978 499-0172 F 978 465-2371
TAG Engineering LLC Seawater Systems Consultant	P.O. Box 558 Woods Hole, MA 02543 T 508 362-0561
Nitsch Engineering Civil Engineer	2 Center Plaza, No.430 Boston, MA 02108 T 617 338-0063
Horiuchi Solien Landscape Architect	P.O. Box 914, 200 Main St. Falmouth, MA 02541 T 508 540-5320 F 508 540-8651
GZA GeoEnvironmental Geo-Environmental	133 Federal St. Boston, MA 02110 T 617 963-1000 F 617 4482-6868
Pieszak Lighting Design Lighting Design	123 Davis Ave. Brookline, MA 02445 T 617 335-8597

Notes:

N

Keyplan

Project Number: 31206
Drawing By: MLC
Checked By: DMC
Filename:
Issue Date: 02/10/2016

Revisions:

No.	Date	Description

Construction Documents Progress Set

Erosion Control Details

Construction Documents
Scale: AS NOTED

COMMONWEALTH OF MASSACHUSETTS DAVID M. CONWAY CIVIL No. 40969 REGISTERED PROFESSIONAL ENGINEER 2/12/16

C-301

2016 Ellenzweig©

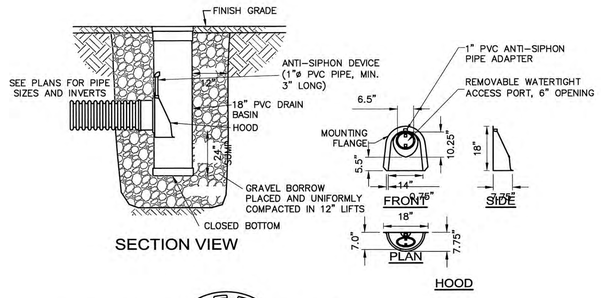

SECTION VIEW

HOOD

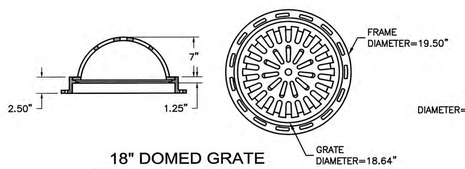

18" DOMED GRATE

FOR USE AT AD-101, AD-102

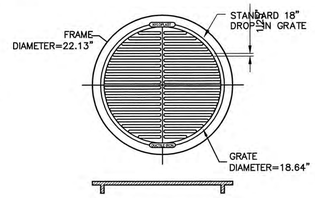

18" DROP-IN GRATE

FOR USE AT AD-107 AND AD-108

NOTES:

1. FRAME AND GRATE SHALL BE DUCTILE IRON PER ASTM A536 GRADE 70-50-05 AND SHALL MEET H-20 LOAD RATING.
2. AREA DRAINS SHALL BE NYLOPLAST MODEL 2815 AS MANUFACTURED BY ADVANCED DRAINAGE SYSTEMS, INC., OR APPROVED EQUAL.
3. DRAIN BASIN TO BE CUSTOM MANUFACTURED ACCORDING TO PLANS AND DETAIL.
4. CASTINGS SHALL BE FURNISHED WITH A BLACK PAINT.

18" AREA DRAIN DETAIL IN LANDSCAPE

NOT TO SCALE

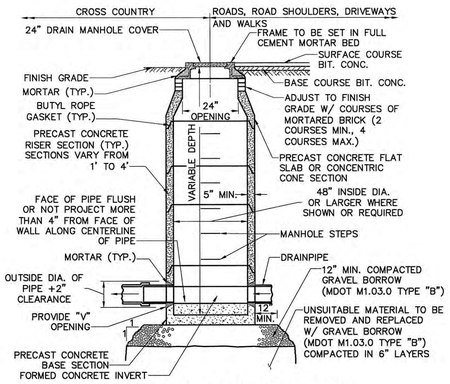

TYPICAL DRAIN MANHOLE DETAIL

NOT TO SCALE

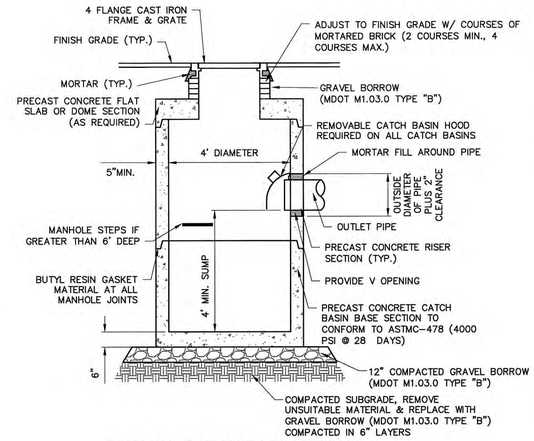

TYPICAL CATCH BASIN DETAIL

NOT TO SCALE

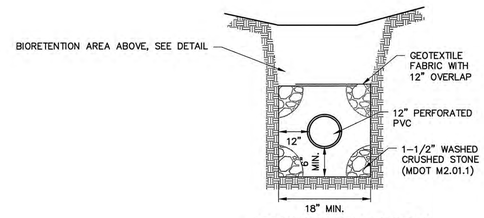

12" PERF. PIPE DETAIL

NOT TO SCALE

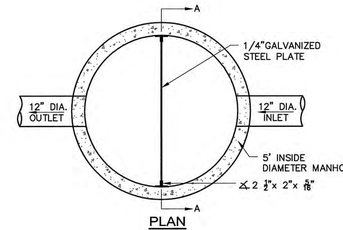

PLAN

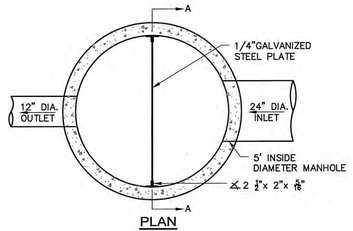

PLAN

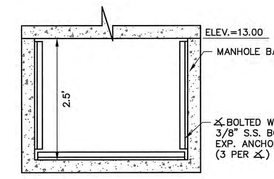

SECTION A-A

OUTLET CONTROL STRUCTURE #2

NOT TO SCALE

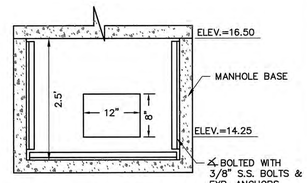

SECTION A-A

OUTLET CONTROL STRUCTURE #1

NOT TO SCALE

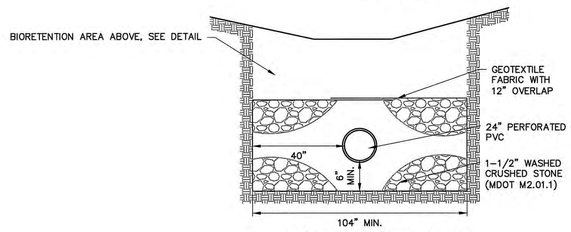

24" PERF. PIPE DETAIL

NOT TO SCALE

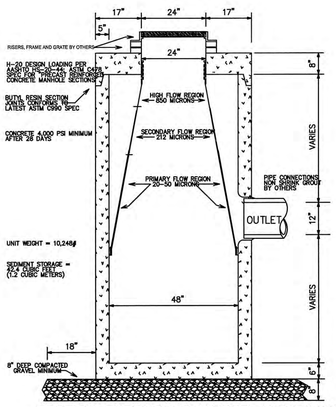

SECTION THROUGH CHAMBER AND FILTERS

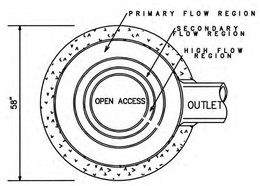

PLAN VIEW

NOTES:

- MANHOLES TO BE SET BY DRAINAGE CONTRACTOR IN CONJUNCTION WITH OTHER DRAINAGE MANHOLES AND PIPING, SET IN ACCORDANCE WITH CITY OR STATE SPECIFICATION WITH REGARD TO BASE AND BACKFILL MATERIALS, COMPACTION AND OTHER TOLERANCES.
- STORMWATER QUALITY INTERNAL PARTS TO BE ADJUSTED BY STORMWATER BUFFER ZONE AFTER INLET GRATE IS INSTALLED
- STORMWATER BUFFER ZONE IS COVERED BY U.S. PATENT #7,658,857 and 7,981,300.
- CONTACT STORMWATER BUFFER ZONE FOR DETAILS NOT SHOWN ON THIS DRAWING. 978-801-1729 OR CHECK www.mcstep.net FOR ADDITIONAL PERFORMANCE DATA.

WATER QUALITY INLET
STORMWATER BUFFER ZONE
CATCH BASIN INSERT

NOT TO SCALE

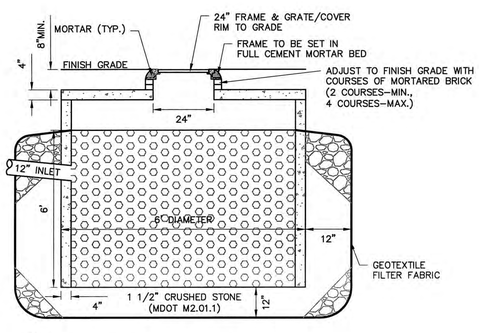

NOTES:

1. NO BOTTOM
2. CONCRETE MINIMUM STRENGTH: 5,000 P.S.I. AFTER 28 DAYS
3. STEEL REINFORCEMENT: ASTM A-615, A-185, OR A-497, 1" MIN. COVER
4. DESIGN LOADING: AASHTO HS20-44

6 FOOT DIAMETER DRY WELL DETAIL

NOT TO SCALE

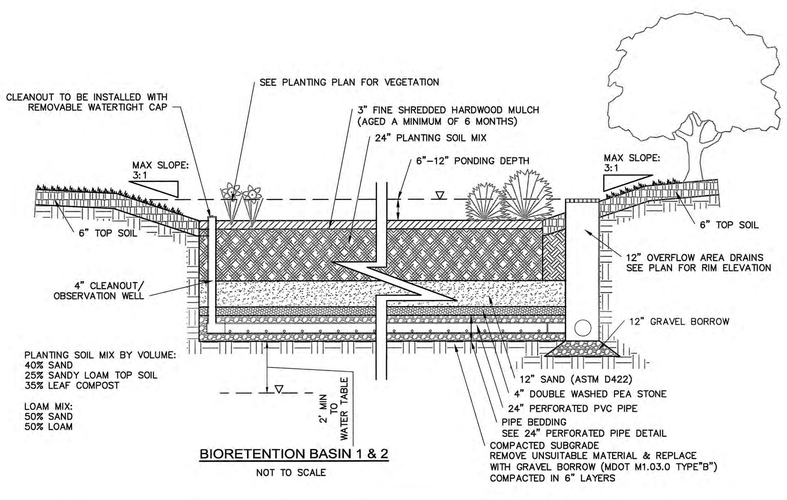

BIORETENTION BASIN 1 & 2

NOT TO SCALE

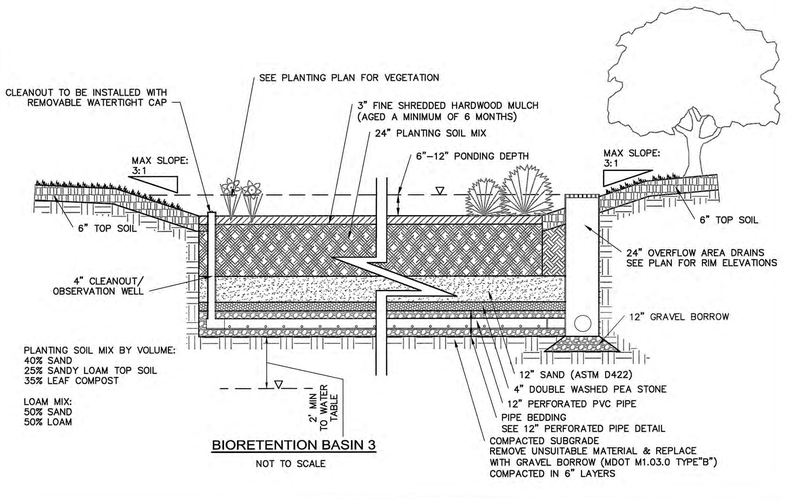

BIORETENTION BASIN 3

NOT TO SCALE

J:\31206 SMAST\CADD\Current\Revit\Central File

2016 Ellenzweig©

SMAST II, University of Massachusetts, Dartmouth

Umass Building Authority (UMBA)
Project Number 11-D1

Hill International, Inc. Owner's Project Manager	330 Congress Street, Boston, MA 02210 T 617 778-0900
Ellenzweig Architects | Planners	**230 Congress Street Boston, MA 02110 T 617 491-5575 F 617 868-2318**
Lin Associates, Inc. Structural Engineer	2001 Beacon Street, Brighton, MA 02135 T 617 566-4216
BR+A Consulting Engineers MEP/IT/Security Engineer	10 Guest Street Boston, MA 02135 T 617 254-0016 F 617 924-9339
Fernandez & Associates Fire Protection Engineer	63 Larkin Road Byfield, MA 01922 T 978 499-0172 F 978 465-2371
TAG Engineering LLC Seawater Systems Consultant	P.O. Box 558 Woods Hole, MA 02543 T 508 362-0561
Nitsch Engineering Civil Engineer	2 Center Plaza, No.430 Boston, MA 02108 T 617 338-0063
Horiuchi Solien Landscape Architect	P.O. Box 914, 200 Main St. Falmouth, MA 02541 T 508 540-5320 F 508 540-8651
GZA GeoEnvironmental Geo-Environmental	133 Federal St. Boston, MA 02110 T 617 963-1000 F 617 4482-6868
Pieszak Lighting Design Lighting Design	123 Davis Ave. Brookline, MA 02445 T 617 335-8597

Notes:

N

Keyplan

Project Number:	31206
Drawing By:	MLC
Checked By:	DMC
Filename:	
Issue Date:	02/10/2016

Revisions:

No.	Date	Description

Construction Documents Progress Set

Site Utility Details

Construction Documents
Scale: AS NOTED

COMMONWEALTH OF MASSACHUSETTS DAVID M. CONWAY CIVIL No. 40063 REGISTERED PROFESSIONAL ENGINEER 2/5/16

C-400

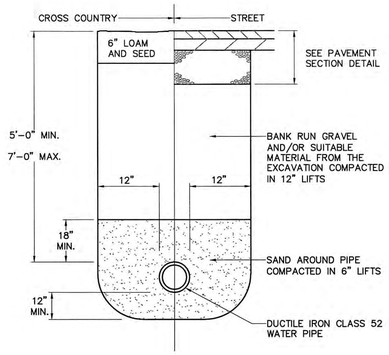

WATER TRENCH DETAIL

NOT TO SCALE

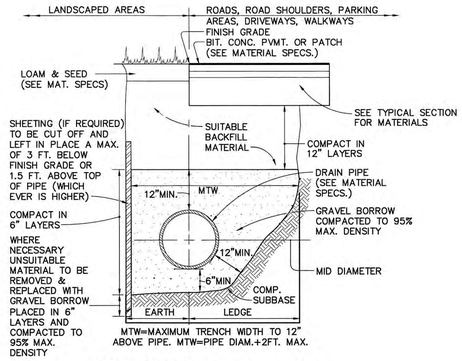

STANDARD TRENCH DETAIL FOR UTILITY PIPE

NOT TO SCALE

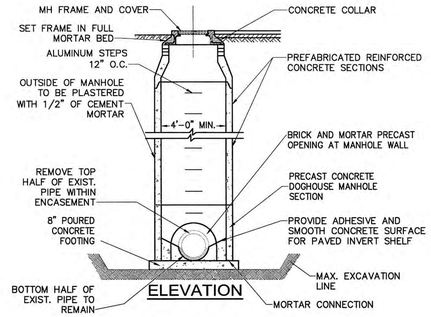

NOTES:
1. PREFABRICATED REINFORCED CONCRETE MANHOLE SECTIONS SHALL BE USED. THEY SHALL BE DESIGNED TO WITHSTAND AASHTO HS-20-44 LOADING.
2. SHOP DRAWINGS WILL BE REQUIRED TO BE SUBMITTED FOR APPROVAL. THE SHOP DRAWINGS SHALL BE STAMPED BY A PROFESSIONAL ENGINEER REGISTERED IN MASSACHUSETTS.

DOGHOUSE MANHOLE DETAIL

NOT TO SCALE

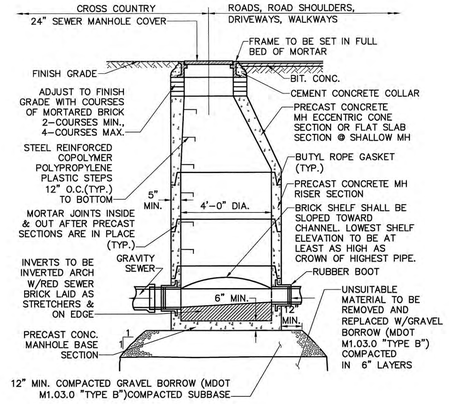

TYPICAL SEWER MANHOLE DETAIL

NOT TO SCALE

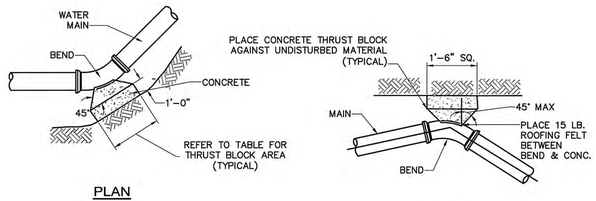

PLAN

PLAN

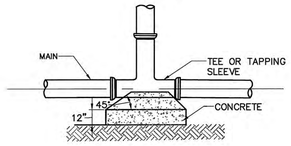

PLAN

NOTES:

1. THRUST BLOCKS TO BE USED ON ALL PRESSURE PIPES AT HORIZONTAL AND VERTICAL BENDS GREATER OR EQUAL TO 45°, TEES AND DEAD ENDS.
2. FOR FITTINGS WITH LESS THAN 45° DEFLECTION USE BEARING AREAS FOR 45° BEND.
3. BEARING AREAS BASED ON HORIZONTAL PASSIVE SOIL PRESSURE OF 2000 PSF AND A MINIMUM INTERNAL WATER PRESSURE OF 175 PSIG. JOINTS SHALL NOT BE ENCASED IN CONCRETE, BEARING AREAS MAY BE DISREGARDED FOR TRENCHES IN ROCK WHERE THE TOP OF THE ROCK FACE IS AT OR ABOVE THE CROWN OF THE PIPE. HOWEVER, CONCRETE BACKING SHALL BE PLACED BETWEEN THE PIPE AND ROCK FACE.

TABLE OF BEARING AREAS IN SQUARE FEET AGAINST UNDISTURBED MATERIAL FOR FITTING. *

SIZE OF MAIN (INCHES)	90° BEND (S.F.)	45° BEND (S.F.)	DEAD END (S.F.)
4	2.3	1.3	1.6
6	4.7	2.5	3.3
8	8.0	4.5	6.0
12	17.0	9.5	12.0

THRUST BLOCK DETAILS

NOT TO SCALE

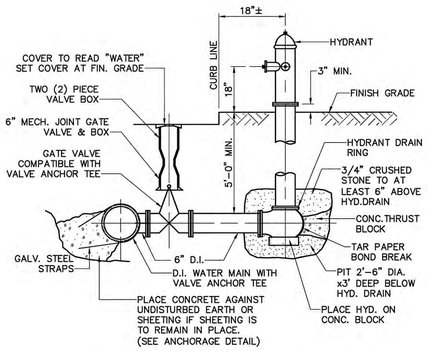

NOTE: ALL JOINTS ON HYDRANT BRANCH TO BE RESTRAINED JOINTS

FIRE HYDRANT DETAIL

NOT TO SCALE

SMAST II, University of Massachusetts, Dartmouth

Umass Building Authority (UMBA)
Project Number 11-D1

Hill International, Inc. Owner's Project Manager	330 Congress Street, Boston, MA 02210 T 617 778-0900
Ellenzweig Architects | Planners	**230 Congress Street Boston, MA 02110 T 617 491-5575 F 617 868-2318**
Lin Associates, Inc. Structural Engineer	2001 Beacon Street, Brighton, MA 02135 T 617 566-4216
BR+A Consulting Engineers MEP/IT/Security Engineer	10 Guest Street Boston, MA 02135 T 617 254-0016 F 617 924-9339
Fernandez & Associates Fire Protection Engineer	63 Larkin Road Byfield, MA 01922 T 978 499-0172 F 978 465-2371
TAG Engineering LLC Seawater Systems Consultant	P.O. Box 558 Woods Hole, MA 02543 T 508 362-0561
Nitsch Engineering Civil Engineer	2 Center Plaza, No.430 Boston, MA 02108 T 617 338-0063
Horiuchi Solien Landscape Architect	P.O. Box 914, 200 Main St. Falmouth, MA 02541 T 508 540-5320 F 508 540-8651
GZA GeoEnvironmental Geo-Environmental	133 Federal St. Boston, MA 02110 T 617 963-1000 F 617 4482-6868
Pieszak Lighting Design Lighting Design	123 Davis Ave. Brookline, MA 02445 T 617 335-8597

Notes:

N

Keyplan

Project Number: 31206
Drawing By: MLC
Checked By: DMC
Filename:
Issue Date: 02/10/2016

Revisions:

No.	Date	Description

Construction Documents Progress Set

Site Utility Details

Construction Documents
Scale: AS NOTED

COMMONWEALTH OF MASSACHUSETTS DAVID M. CONWAY CIVIL No. 40363 REGISTERED PROFESSIONAL ENGINEER 2/12/16

C-401

2016 Ellenzweig©