NOTE:
THE AREA AROUND THE VERTICAL OUTLET FOR THE INDIVIDUAL HOME INFILTRATION SYSTEM SHALL BE GRADED AWAY FROM HOMES AND ADJACENT PROPERTIES.

DRAWING REVISIONS

ACTION	DATE	DESCRIPTION
5	6/2/16	NITSCH & BOARD COMMENTS
4	5/24/16	NITSCH & BOARD COMMENTS
3	4/27/16	AGENT COMMENTS
2	4/26/16	NITSCH & BOARD COMMENTS
1	4/12/16	NITSCH COMMENTS

GENERAL NOTES:

1. PROPERTY LINE INFORMATION SHOWN ON THIS PLAN IS BASED ON AN INSTRUMENT SURVEY PERFORMED BY CAVANARO CONSULTING USING INFORMATION COMPILED FROM AVAILABLE ASSESSOR'S MAPS AND RECORDED DEED INFORMATION.

2. EXISTING UNDERGROUND UTILITIES SHOWN ARE APPROXIMATE. CONTRACTOR SHALL FIELD VERIFY LOCATION PRIOR TO EARTH REMOVAL.

3. PROPOSED GAS SERVICE CONNECTION SHALL BE INSTALLED BY THE LOCAL GAS SERVICE PROVIDER. CONSTRUCTION DETAILS OF THE GAS CONNECTION ARE AVAILABLE AT THE GAS COMPANY.

LEGEND

- PROPERTY LINE
- TEC — PROPOSED TELEPHONE, ELECTRIC & CABLE
- G — EXISTING GAS LINE
- G — PROPOSED GAS LINE
- W — EXISTING WATER LINE
- W — PROPOSED WATER LINE
- S — EXISTING SEWER LINE
- S — PROPOSED SEWER LINE
- D — EXISTING DRAIN LINE
- D — PROPOSED DRAIN LINE
- EXISTING HYDRANT
- PROPOSED HYDRANT
- EXISTING WATER VALVE
- PROPOSED WATER VALVE
- EXISTING CATCH BASIN
- PROPOSED CATCH BASIN
- EXISTING DRAIN MANHOLE
- PROPOSED DRAIN MANHOLE
- TREE LINE
- TYP. — TYPICAL
- CLDI — CEMENT LINED DUCTILE IRON
- TBA — TO BE ABANDONED
- PROPOSED THRUST BLOCK

COMMONWEALTH OF MASSACHUSETTS — BRENDAN P. SULLIVAN No. 41358 — REGISTERED PROFESSIONAL LAND SURVEYOR

COMMONWEALTH OF MASSACHUSETTS — BRENDAN P. SULLIVAN CIVIL No. 41358 — REGISTERED PROFESSIONAL ENGINEER

PLAN TO ACCOMPANY NOTICE OF INTENT

NORTHSIDE FARM
GRADING & DRAINAGE

CAVANARO CONSULTING
687 MAIN STREET
P.O. BOX 5175
NORWELL, MASSACHUSETTS 02061
PHONE: 781.659.8187
FAX: 781.659.8186

OWNER/APPLICANT:

NEW BEDFORD COUSINS LLC
P.O. BOX 36
SCITUATE, MA 02066

PROJECT NO. : 5005	DRAWING NO.
SCALE : AS SHOWN	GD
DATE : 3/3/16	
DESIGNED BY : BPS	
DRAWN BY : BPS	SHEET NO. 3 OF 11
CHECKED BY : JCC	FILENAME: Z:\5005\DWG\NOI\NORTHSIDE FARM NOI

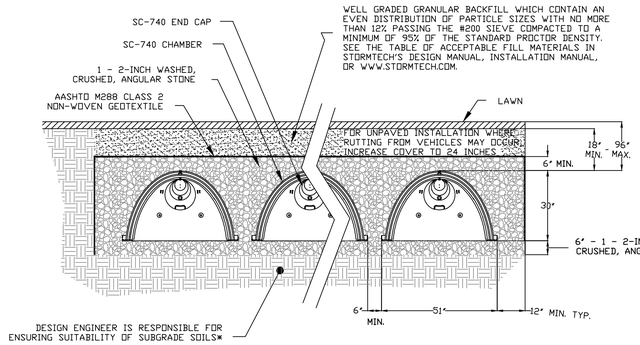

STORMTECH SC-740 CHAMBER SYSTEM TYPICAL CROSS SECTION DETAIL

NOT TO SCALE

NOTE:

REMOVE TOPSOIL, SUBSOIL AND ANY OTHER UNSTABLE MATERIAL AND REPLACE WITH TITLE 5 SAND TO THE TOP OF THE STONE ELEVATION (EL. 97.5).

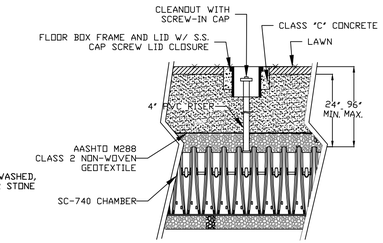

STORMTECH SC-740 CHAMBER SYSTEM INSPECTION PORT DETAIL

NOT TO SCALE

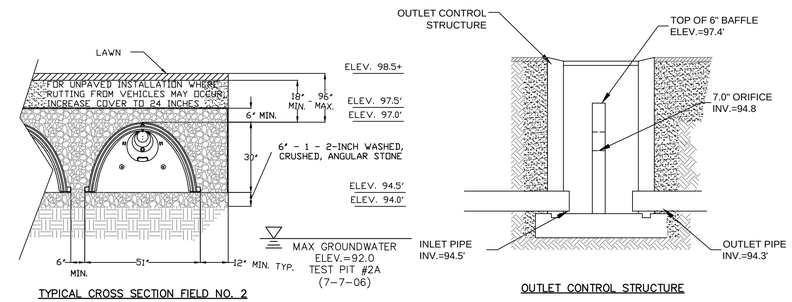

TYPICAL CROSS SECTION FIELD NO. 2

OUTLET CONTROL STRUCTURE

SUBSURFACE INFILTRATION AREA NO. 2

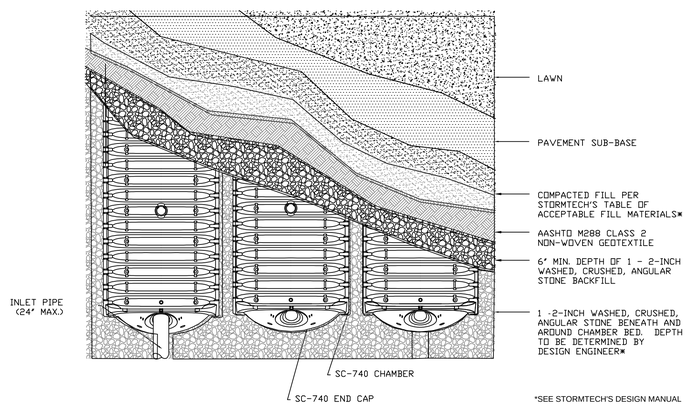

*SEE STORMTECH'S DESIGN MANUAL

STORMTECH SC-740 CHAMBER SYSTEM PLAN VIEW DETAIL

NOT TO SCALE

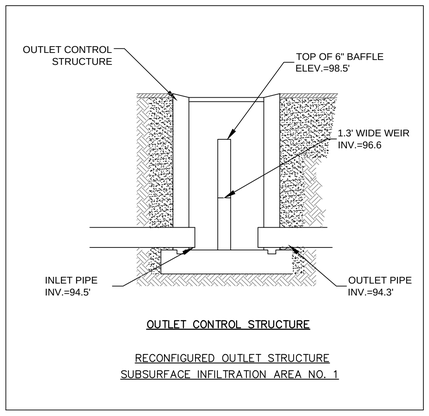

OUTLET CONTROL STRUCTURE

RECONFIGURED OUTLET STRUCTURE

SUBSURFACE INFILTRATION AREA NO. 1

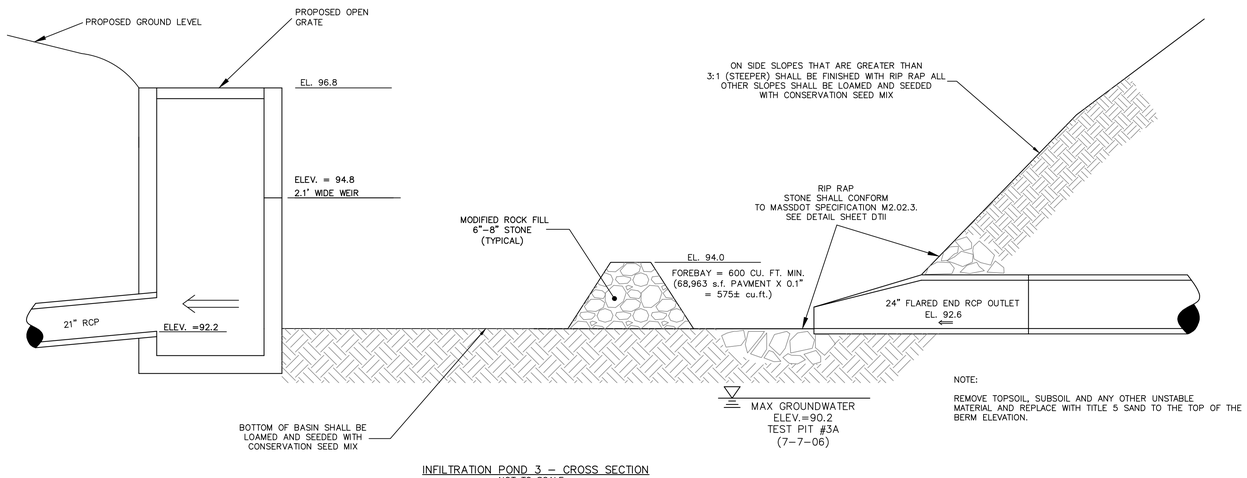

NOTE:

REMOVE TOPSOIL, SUBSOIL AND ANY OTHER UNSTABLE MATERIAL AND REPLACE WITH TITLE 5 SAND TO THE TOP OF THE BERM ELEVATION.

INFILTRATION POND 3 – CROSS SECTION

NOT TO SCALE

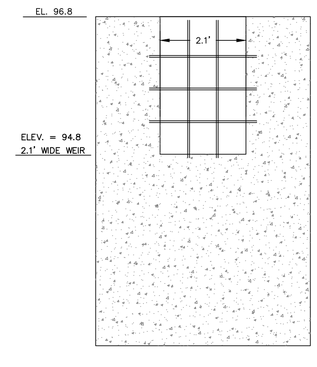

DRAINAGE STRUCTURE – FRONT VIEW

NOT TO SCALE

INFILTRATION POND DETAILS

DRAWING REVISIONS

ACTION	DATE	DESCRIPTION
4	6/2/16	NITSCH & BOARD COMMENTS
3	5/24/16	NITSCH & BOARD COMMENTS
2	4/26/16	NITSCH & BOARD COMMENTS
1	4/12/16	NITSCH COMMENTS

GENERAL NOTES:

1. PROPERTY LINE INFORMATION SHOWN ON THIS PLAN IS BASED ON AN INSTRUMENT SURVEY PERFORMED BY CAVANARO CONSULTING USING INFORMATION COMPILED FROM AVAILABLE ASSESSOR'S MAPS AND RECORDED DEED INFORMATION.

2. EXISTING UNDERGROUND UTILITIES SHOWN ARE APPROXIMATE. CONTRACTOR SHALL FIELD VERIFY LOCATION PRIOR TO EARTH REMOVAL.

3. PROPOSED GAS SERVICE CONNECTION SHALL BE INSTALLED BY THE LOCAL GAS SERVICE PROVIDER. CONSTRUCTION DETAILS OF THE GAS CONNECTION ARE AVAILABLE AT THE GAS COMPANY.

4. PROPOSED ELECTRICAL SERVICE CONNECTION FROM THE NEAREST UTILITY POLE SHALL BE INSTALLED BY THE LOCAL ELECTRIC SERVICE PROVIDER.

5. PROPOSED WATER SERVICE CONNECTION SHALL BE TO THE NEAREST MAIN LINE BRANCH IN ACCORDANCE WITH CITY OF NEW BEDFORD WATER DEPARTMENT STANDARDS.

6. ALL SANITARY SEWER CONNECTIONS SHALL BE REVIEWED AND APPROVED BY THE CITY OF NEW BEDFORD ENGINEERING DEPARTMENT PRIOR TO CONSTRUCTION.

LEGEND

	PROPERTY LINE
TEC	PROP. TELEPHONE, ELECTRIC & CABLE
G	EX GAS LINE
G	PROPOSED GAS LINE
W	EX WATER LINE
W	PROPOSED WATER LINE
S	EXISTING SEWER LINE
S	PROPOSED SEWER LINE
D	EXISTING DRAIN LINE
D	PROPOSED DRAIN LINE
	EXISTING HYDRANT
	PROPOSED HYDRANT
	EXISTING WATER VALVE
WV	PROPOSED WATER VALVE
	EXISTING CATCH BASIN
	PROPOSED CATCH BASIN
D	EXISTING DRAIN MANHOLE
D	PROPOSED DRAIN MANHOLE
	TREE LINE
TYP.	TYPICAL

COMMONWEALTH OF MASSACHUSETTS BRENDAN P. SULLIVAN No. 41322 REGISTERED PROFESSIONAL LAND SURVEYOR

COMMONWEALTH OF MASSACHUSETTS BRENDAN P. SULLIVAN CIVIL No. 41358 REGISTERED PROFESSIONAL ENGINEER

PLAN TO ACCOMPANY NOTICE OF INTENT

NORTHSIDE FARM

DETAIL SHEET I

CAVANARO CONSULTING
687 MAIN STREET
P.O. BOX 5175
NORWELL, MASSACHUSETTS 02061
PHONE: 781.659.8187
FAX: 781.659.8186

OWNER/APPLICANT:

NEW BEDFORD COUSINS LLC
P.O. BOX 36
SCITUATE, MA 02066

PROJECT NO. : 5005	DRAWING NO.
SCALE : AS SHOWN	DTI
DATE : 3/3/16	
DESIGNED BY : BPS	
DRAWN BY : BPS	SHEET NO. 8 OF 11
CHECKED BY : JCC	FILENAME: Z:\5005\DWG\NOI\NORTHSIDE FARM NOI

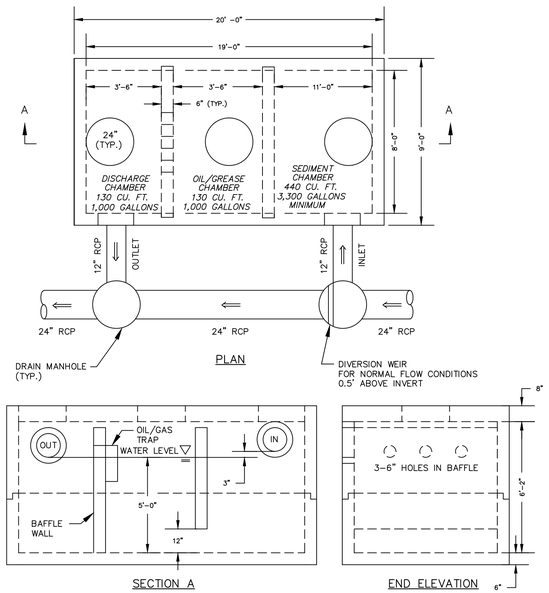

DESIGN CRITERIA:

46,866 S.F.(1.1 AC.) IMPERVIOUS CONTRIBUTING AREA (SUBCATCHMENT AREA NO. 1,2 &3) X 400 CU FT/ACRE (DEP STORMWATER MANAGEMENT) = 440 CU.FT. OR 3,300 GALLONS, THEREFORE USE MINIMUM 5,500 GALLON STRUCTURE.

5,500 GALLON WATER QUALITY CONTROL STRUCTURE NO. 1

NOT TO SCALE

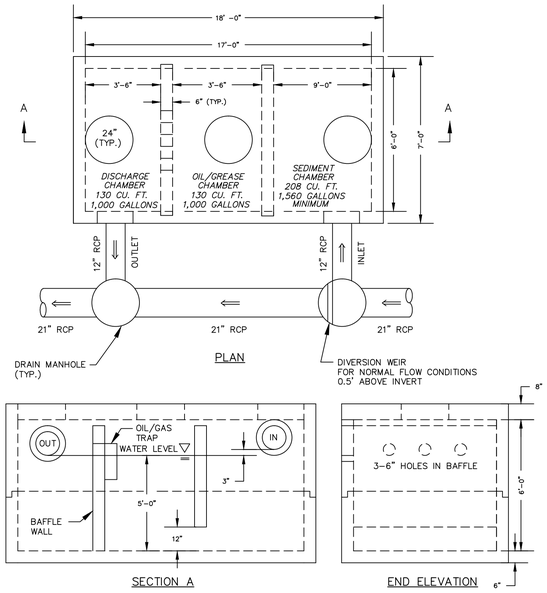

DESIGN CRITERIA:

22,621 S.F.(0.52 AC.) IMPERVIOUS CONTRIBUTING AREA (SUBCATCHMENT AREA NO. 10) X 400 CU FT/ACRE (DEP STORMWATER MANAGEMENT) = 208 CU.FT. OR 1,560 GALLONS, THEREFORE USE MINIMUM 4,500 GALLON STRUCTURE.

4,500 GALLON WATER QUALITY CONTROL STRUCTURE NO. 2

NOT TO SCALE

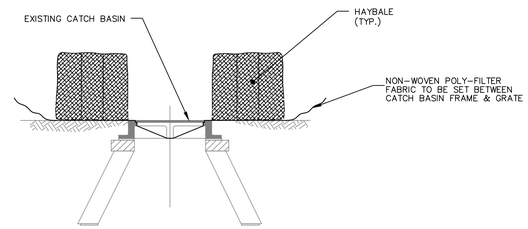

STRAWBALE EROSION CHECK

NOT TO SCALE

Rinker MATERIALS™ Concrete Pipe Division

STC 450i Precast Concrete Stormceptor (450 U.S. Gallon Capacity)

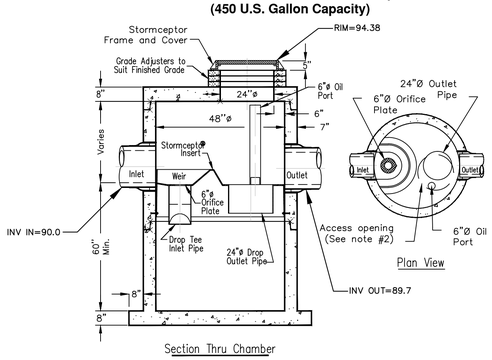

Notes:
1. The Use Of Flexible Connection is Recommended at The Inlet and Outlet Where Applicable.
2. The Cover Should be Positioned Over The Outlet Drop Pipe and The Oil Port.
3. The Stormceptor System is protected by one or more of the following U.S. Patents: #4985148, #5498331, #5725760, #5753115, #5849181, #6068765, #6371690.
4. Contact a Concrete Pipe Division representative for further details not listed on this drawing.

Rinker 029

STORMCEPTOR DETAIL

NOT TO SCALE

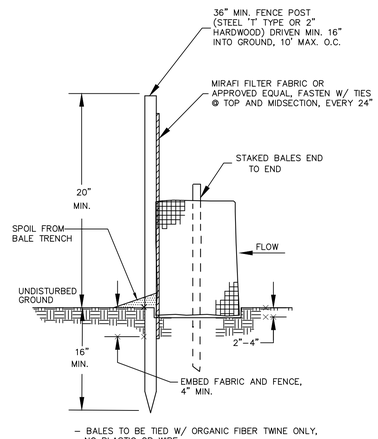

- BALES TO BE TIED W/ ORGANIC FIBER TWINE ONLY, NO PLASTIC OR WIRE.
- HAY BALES TO BE SECURED W/ MIN. TWO (2) 2"X2" WOOD STAKES PER BALE, DRIVEN 18" MIN. INTO GRADE.

HAYBALE WITH SILTFENCE

NOT TO SCALE

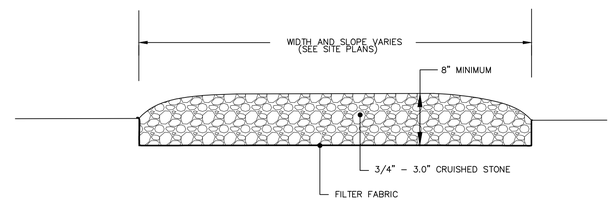

CONSTRUCTION ENTRANCE DETAIL

NOT TO SCALE

DRAWING REVISIONS

ACTION	DATE	DESCRIPTION

GENERAL NOTES:

1. PROPERTY LINE INFORMATION SHOWN ON THIS PLAN IS BASED ON AN INSTRUMENT SURVEY PERFORMED BY CAVANARO CONSULTING USING INFORMATION COMPILED FROM AVAILABLE ASSESSOR'S MAPS AND RECORDED DEED INFORMATION.

2. EXISTING UNDERGROUND UTILITIES SHOWN ARE APPROXIMATE. CONTRACTOR SHALL FIELD VERIFY LOCATION PRIOR TO EARTH REMOVAL.

3. PROPOSED GAS SERVICE CONNECTION SHALL BE INSTALLED BY THE LOCAL GAS SERVICE PROVIDER. CONSTRUCTION DETAILS OF THE GAS CONNECTION ARE AVAILABLE AT THE GAS COMPANY.

4. PROPOSED ELECTRICAL SERVICE CONNECTION FROM THE NEAREST UTILITY POLE SHALL BE INSTALLED BY THE LOCAL ELECTRIC SERVICE PROVIDER.

5. PROPOSED WATER SERVICE CONNECTION SHALL BE TO THE NEAREST MAIN LINE BRANCH IN ACCORDANCE WITH CITY OF NEW BEDFORD WATER DEPARTMENT STANDARDS.

6. ALL SANITARY SEWER CONNECTIONS SHALL BE REVIEWED AND APPROVED BY THE CITY OF NEW BEDFORD ENGINEERING DEPARTMENT PRIOR TO CONSTRUCTION.

LEGEND

	PROPERTY LINE
TEC	PROP. TELEPHONE, ELECTRIC & CABLE
G	EX GAS LINE
G	PROPOSED GAS LINE
W	EX WATER LINE
W	PROPOSED WATER LINE
S	EXISTING SEWER LINE
S	PROPOSED SEWER LINE
D	EXISTING DRAIN LINE
D	PROPOSED DRAIN LINE
	EXISTING HYDRANT
	PROPOSED HYDRANT
	EXISTING WATER VALVE
WV	PROPOSED WATER VALVE
	EXISTING CATCH BASIN
	PROPOSED CATCH BASIN
D	EXISTING DRAIN MANHOLE
D	PROPOSED DRAIN MANHOLE
	TREE LINE
TYP.	TYPICAL

COMMONWEALTH OF MASSACHUSETTS — BRENDAN P. SULLIVAN — No. 41358 — REGISTERED PROFESSIONAL LAND SURVEYOR

COMMONWEALTH OF MASSACHUSETTS — BRENDAN P. SULLIVAN — CIVIL — No. 41358 — REGISTERED PROFESSIONAL ENGINEER

PLAN TO ACCOMPANY NOTICE OF INTENT

NORTHSIDE FARM

DETAIL SHEET IV

CAVANARO CONSULTING
687 MAIN STREET
P.O. BOX 5175
NORWELL, MASSACHUSETTS 02061
PHONE: 781.659.8187
FAX: 781.659.8186

OWNER/APPLICANT:

NEW BEDFORD COUSINS LLC
P.O. BOX 36
SCITUATE, MA 02066

PROJECT NO. : 5005	DRAWING NO.
SCALE : AS SHOWN	DTIV
DATE : 4/25/16	
DESIGNED BY : BPS	
DRAWN BY : BPS	SHEET NO. 11 OF 11
CHECKED BY : JCC	FILENAME: Z:\5005\DWG\NOI\NORTHSIDE FARM NOI