BETA Group, Inc.
Engineers • Scientists • Planners

315 Norwood Park South
Norwood, MA 02062
(781) 255-1982, fax (781) 255-1974
www.BETA-Inc.com

May 31, 2006

Mr. Scott Alfonse
Director, Environmental Stewardship
City of New Bedford
133 William Street, Room 311
New Bedford, MA 02740

Re: Foundation Vent Stack Sampling
New Keith Middle School
New Bedford, MA

Dear Mr. Alfonse:

On March 30 and 31, 2006, BETA Group, Inc. (BETA) collected four air samples from the roof top vent stacks of the sub-slab ventilation system at the new Keith Middle School. BETA collected these samples:

- In response to a question from Mayor Lang regarding the installation and estimated costs associated with an off-gas treatment system for the foundation vent gases. We need to have some basis for an appropriate response, since no appreciable volume of off-gases (with or without volatile organic compounds, PAHs and/or PCBs) is expected and the treatment system requirements will vary depending upon the detected contaminants and their respective concentrations; and
- To obtain baseline information related to the draft Long-Term Monitoring and Maintenance Implementation Plan for the Keith Middle School submitted to US EPA.

Air Sampling Locations

The foundation venting system was designed and installed to provide a preferential pathway for any potential buildup of volatile organic gases beneath the foundation to vent directly to the atmosphere through the roof of the school, and thereby minimize the possibility of migration of vapors into the occupied interior of the school building. BETA's original sampling plan proposed the collection of air samples from all sixteen of the sub-slab foundation vent stacks; however, at time of sampling in late March, only six vent stacks were available to sample.

During set up for sampling, it was discovered that installation of some of the piping had been modified during construction to include a combination of vertical and horizontal piping. The presence of the horizontal piping prevented the lowering of the selected sample tubing to the desired breathing zone elevation on the first floor of the new school. Therefore, BETA was able to collect only four samples from the four stacks with vertical piping. A plan showing the vent stack locations and sampling points is included as Attachment A.

Selected Analyses

The vent stack air sample analyses consist of polychlorinated biphenyls (PCBs), polynuclear aromatic hydrocarbons (PAHs), and volatile organic compounds (VOCs). The sample collection and the subsequent laboratory analyses were performed in accordance with U.S. Environmental Protection Agency (EPA) methods as described in the EPA's "Compendium of Methods for the Determination of Toxic Organic Compounds in Ambient Air." PCBs were collected and analyzed by Method TO-10A, PAHs by Method TO-13A (modified for low flow sampling), and VOCs by Method TO-15.

The samples for PCBs and PAHs were collected on polyurethane foam (PUF) cartridges using battery-powered low-flow personal air sampling pumps operating at 0.5 liters per minute. The air sample intake tubing was lowered into the vent stack to an elevation approximately equivalent to the breathing zone of the first floor (i.e., approximately 4-6 feet above the floor). BETA calculated the volume of air contained within each vent stack and collected the same approximate volume through the PUF cartridges.

BETA collected the VOC samples using three-liter laboratory pre-cleaned stainless steel SUMMA canisters. The canisters were evacuated in the laboratory to a vacuum of approximately 0.05 millimeters of mercury and allowed to collect vent stack air into the canisters over a four hour period via a calibrated flow controller. The VOC samples were also collected through tubing lowered into the vent stack to an elevation approximately equivalent to the breathing zone of the first floor. Refer to Attachment B for a description of our sampling protocols. BETA submitted all samples to Alpha Woods Hole Labs (Alpha) of Westborough, Massachusetts for analyses under strict chain-of-custody protocols.

Analytical Results

Alpha did not detect any PCBs or PAHs in the PUF cartridges above their respective method detection levels. Alpha detected VOCs as summarized in the attached table (Attachment C). Due to the recent construction of the vent stacks using standard PVC pipe glue and because the Site is still an active construction site, the VOC analytical results included constituents of PVC cements and cleaners and gasoline vapors. These compounds will diminish over time as the off-gassing from the glue decreases and construction at the Site is completed. The complete laboratory results are included as Attachment D.

Ambient Air Sampling

BETA returned to the Site on April 27, 2006 to collect three rooftop ambient VOC air samples and to collect a repeat VOC sample from within vent stack "Gym-2." All four air samples were collected using SUMMA canisters with four-hour flow controllers. The Gym-2 stack sample was collected using Teflon intake tubing lowered into the stack to the approximate elevation of the first floor breathing zone. The three ambient air samples (Gym-2A, Gym-3A, and Aud-2A) were collected directly into SUMMA canisters placed adjacent to each of the indicated vent stack

locations. BETA also submitted these samples to Alpha under strict chain-of-custody protocols for analysis of VOCs by EPA method TO-15. The analytical results are summarized in Attachment C. The complete laboratory data sheets are included as Attachment D.

The April 27, 2006 ambient air results include low concentrations of VOCs related to PVC pipe cement and cleaners, but at lower levels than within the stacks. The PVC pipe related VOCs within the Gym-2 stack had also decreased significantly. Tetrachloroethene was not detected in either the Gym-2 stack or in the ambient air during the second round of sampling.

Ms. Cynthia Fuller of Wilcox & Barton, BETA's risk assessor, has reviewed the data and determined that these concentrations, including those that exceed the AALs, do not pose a risk to human health. Reference is made to Ms. Fuller's letter in Attachment E for further discussion of these results.

Based upon the very low and non-detect levels of contaminants of concern, we do not recommend proceeding with the design of any collection and treatment systems. If, in the future, elevated levels of contaminants are detected at any of the vent stacks, consideration should be given at that time to the design and implementation of a local system to induce a negative pressure on the vent piping and pass the exhaust gases through an appropriate treatment system. The actual treatment system design will depend upon the physical and chemical characteristics, and the concentrations, of the contaminants present in the exhaust gases.

Over the next few weeks, we plan to complete air sampling and analyses at the remaining vent locations. If you have any questions or we can be of any further assistance, please contact me at 781-255-1982.

Very truly yours,
BETA Group, Inc.

Alan D. Hanscom, P.E., LSP
Associate

cc: Jacqueline Coucci, City of New Bedford
Larry Oliveira, New Bedford School Department
Kimberly Tisa, US EPA
Gerard Martin, DEP
Dave Billo, BETA Group, Inc.
Tim Downey, BETA Group, Inc.

Attachment A
Sample Location Plan

New Keith Middle School
Foundation Vent
Air Sampling Locations
April 2006

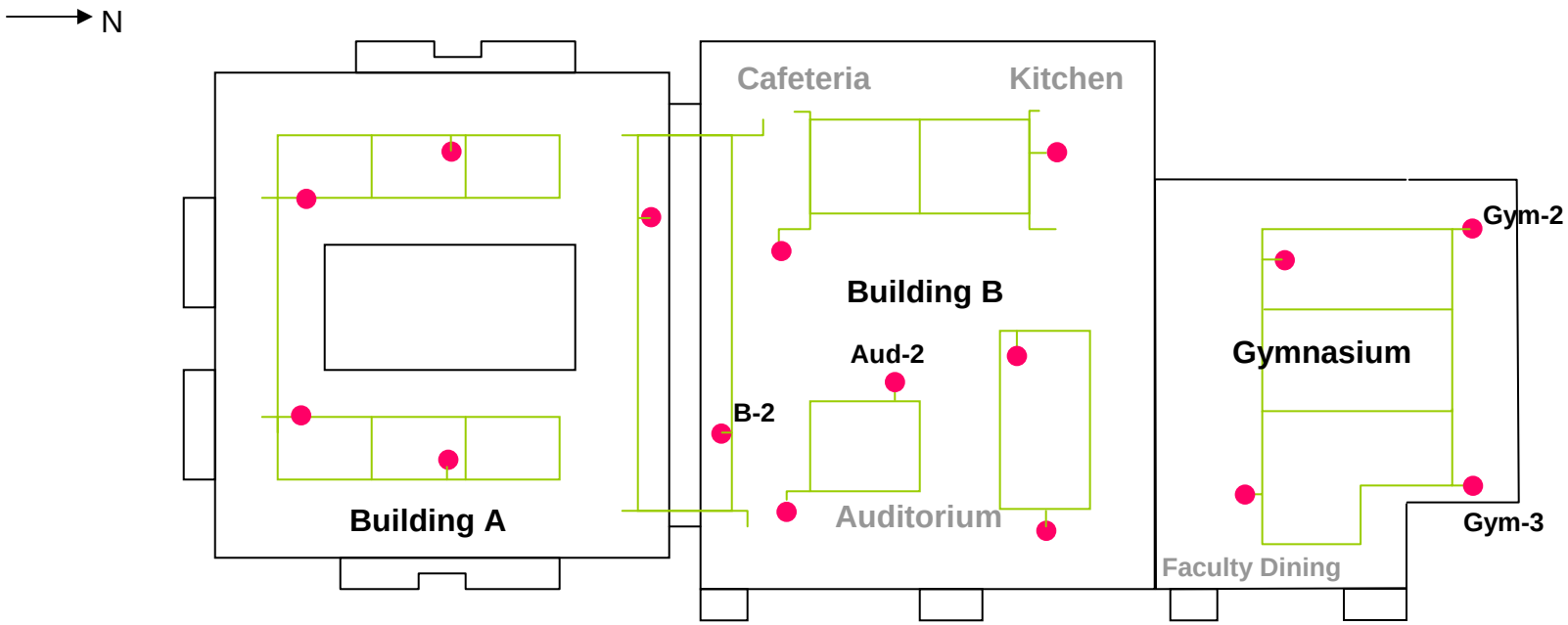

Hathaway Boulevard

BETA Group, Inc.
Engineers • Scientists • Planners
315 Norwood Park South, Norwood, MA 02062 781.255.1982
email: beta@beta-inc.com

● = Vent Riser

— = Pressure Venting and Collection System

Attachment B
Sampling Protocol

Attachment B

McCoy Field / New Keith Middle School
New Bedford, MA

MCP AIR MONITORING SERVICES
SAMPLING PROTOCOL

Scope of Work – New Keith Middle School

BETA will perform an assessment of the passive foundation venting system to evaluate potential exposures to contamination vapors venting through this system. BETA will collect samples for analysis of Volatile Organic Compounds (VOCs) by EPA Method TO-15, Polynuclear Aromatic Hydrocarbons (PAHs) by EPA Method TO-13A; and PCBs by EPA Method TO-10A. The TO-10A and TO-13A samples will be collected using personal sampling pumps to draw vent stack air through polyurethane foam sample cartridges. The TO-15 samples will be collected using SUMMA canisters. BETA proposes to perform the sampling as soon as building construction allows. BETA will:

- Prepare a Site sampling plan;
- Collect air samples from within the sixteen foundation vent stacks penetrating the roof of the new Keith Middle School building (see sampling protocol below);
- BETA anticipates collecting 16 stack samples. The samples will be collected in two consecutive 24-hour sampling events using nine SUMMA canisters and eight dual port sampling pumps set up and operated during each event;
- Submit the samples for laboratory analysis of:
  - VOCs by EPA Method TO-15;
  - PAHs by EPA Method TO-13A; and
  - PCBs by EPA Method TO-10A.
- Submit two blank PUF cartridges and one SUMMA canister with each daily sample shipment for quality assurance/quality control for analysis of PCBs and PAHs
- Prepare a summary report containing BETA's findings, conclusions, and recommendations regarding air quality.

Changes based on technical justification may be made in the specific sample collection intervals and/or substitutions be made by equal or improved sampling and/or analytical methods upon review and approval of LSP-of-Record. Any such changes and its/their justification will be described in the subsequent summary report.

Collection of Polynuclear Aromatic Hydrocarbon (PAH) Samples by EPA Method T0-13A (modified) and Polychlorinated Biphenyl (PCB) Samples by EPA Method TO-10A

Refer to the attached EPA Method Description for TO-10A and TO-13A

Equipment & Materials (for each foundation vent stack sample)

1. MSA Escort Elf® Pump
2. MSA Twin Port Sampler
3. MSA DigiCal Primary Calibrator
4. 60 feet Teflon® tubing – 1/8-inch I.D.
5. Sample Cartridges (Supplied by Laboratory)
6. Barometer
7. Thermometer

Sample Collection Method

1. Fully charge all sampling pumps.
2. Calibrate MSA Escort Elf® Pump using MSA DigiCal Primary Calibrator per manufacturer's instructions (Attached).
3. Measure depth to bottom of interior of vent. Subtract six feet to determine depth from which air samples will be collected. This depth is used to determine the sample cartridge intake location which should be at the approximate height of the breathing zone at the first floor of the school (confirm in field).
4. Using sufficient dedicated Teflon® tubing to reach sampling depth measured in Step 1, attach MSA Twin Port Sampler to MSA Escort Elf® Pump.
5. Insert polyurethane foam (PUF) sampling cartridge into the first port of the MSA Twin Port Sampler (for TO-10A PCB sample collection) and a PUF / XAD® resin sampling cartridge into the second port of the MSA Twin Port Sampler (for TO-13A PAH sample collection).
6. Adjust and calibrate the flow rate to 500 milliliters per minute through each cartridge per manufacturer's instructions.
7. Measure and record ambient barometric pressure, ambient temperature, wind conditions.
8. Lower Twin Port Sampler to sampling depth measured in Step 1.
9. Record sampling start time and sampling pump air flow rate.
10. Shield sampling pump from weather as necessary.
11. After appropriate elapsed time, shut off sampling pump, remove sampling cartridges from vent stack, and wrap cartridges in aluminum foil.
12. Label each cartridge with sample location, sampling start date and time, sampling end date and time, and total volume of air drawn through cartridge.
13. Record barometric pressure, ambient temperature and wind conditions.
14. Transport cartridges to laboratory under chain of custody at < 4°C. Include one field blank (one opened but unused sample cartridge of each type) with each shipment of samples.
15. Secure Teflon® sampling tubing in vent stack for subsequent sampling events.

Collection of Volatile Organic Compound (VOC) Samples by EPA Method TO-15

Equipment & Materials (for each foundation vent stack sample)

1. SUMMA canister (3-6 liter)
2. 30 feet Teflon® tubing – 1/8-inch I.D.
3. Barometer
4. Thermometer

Sample Collection Method

1. Obtain an evacuated, precleaned passivated stainless steel SUMMA® canister. Canister shall be fitted with flow-restrictive inlet valve designed to collect a sample over a 4-hour period.
2. Measure depth to bottom of interior of vent. Subtract six feet to determine depth from which air samples will be collected. This depth is used to determine the sample tube intake location which should be at the approximate height of the breathing zone at the first floor of the school.
3. Cut to length sufficient dedicated Teflon® tubing to reach sampling depth measured in Step 1, and lower tubing into vent stack to sampling depth.
4. Use sampling pump or other suitable equipment to evacuate air from Teflon® sampling tube. [Example: for 30 feet of tubing, remove one volume (approximately 80 cubic centimeters) of standing air to prefill tubing with sample air from within vent stack.]
5. Attach Teflon® sampling tube to inlet fitting of SUMMA® canister. Record SUMMA® canister vacuum gauge reading.
6. Open SUMMA® canister inlet valve.
7. Measure and record ambient barometric pressure, ambient temperature, wind conditions, and sampling start time.
8. After four hours close SUMMA® canister inlet valve.
9. Record time of closing of inlet valve, SUMMA® canister vacuum gauge reading, location of sample, barometric pressure, ambient temperature and wind conditions.
10. Label SUMMA® canister with sample location, sampling start date and time, and sampling end date and time.
11. Transport canister to laboratory under chain of custody.
12. Secure Teflon® sampling tubing in vent stack for subsequent sampling events.

Equipment & Supplies List

1. MSA Escort Elf® Pump
2. MSA Twin Port Sampler
3. MSA DigiCal Primary Calibrator
4. Barometer
5. Teflon® tubing – 1/8-inch I.D.
6. TO-13A Sample Cartridges
7. TO-10A Sample Cartridges
8. SUMMA canisters
9. Thermometer
10. Duct Tape
11. One-gallon zip lock bags
12. Gloves
13. Labels
14. Cooler
15. 100' Tape
16. Roof / Vent Stack Plan
17. Field Book
18. Camera
19. Small tools

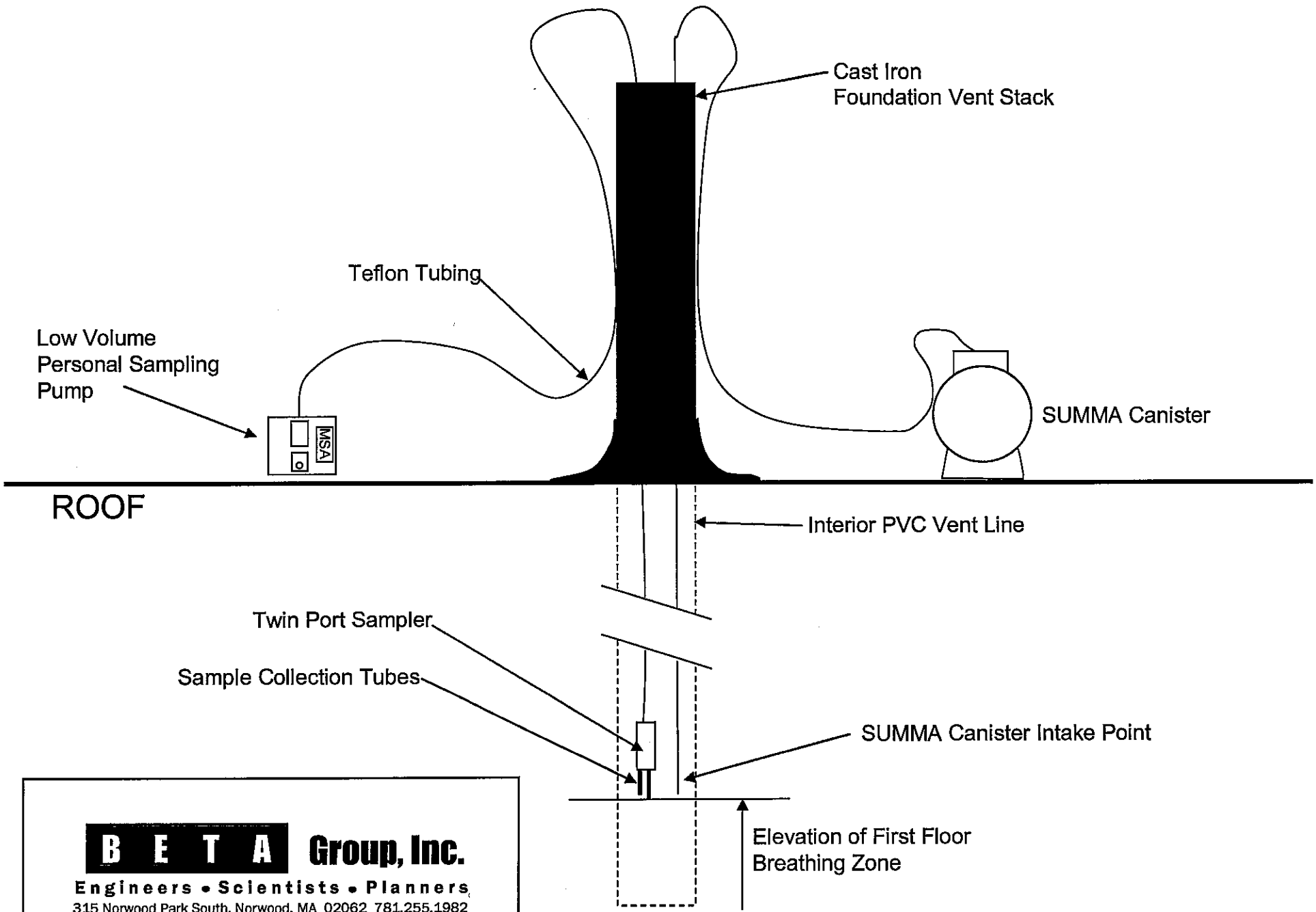

BETA Group, Inc.
Engineers • Scientists • Planners
315 Norwood Park South, Norwood, MA 02062 781.255.1982
email: beta@beta-inc.com

OPERATING INSTRUCTIONS
DigiCal ™ Primary Calibrator
Catalog No. 655101

INSTRUCTION MANUAL

TABLE OF CONTENTS

SECTION	PAGE
1. ANALYSIS OF AIR FLOW CALIBRATION	
a. Physics of Measurement	2
b. Accuracy of Gaseous Flow Measurements	3
2. PRINCIPAL OF OPERATION and FEATURES	4
3. START UP PROCEDURE	5 - 6
4. CALIBRATION OF AIR FLOW SOURCES WITH THE DigiCal	7
5. MAINTENANCE OF THE DigiCal CALIBRATOR	8
6. VERIFICATION OF THE CALIBRATOR	9
7. POWER SUPPLY	9
8. NOTES/PRECAUTIONS	10
9. PARTS LIST and SERVICE INFORMATION	11

Section 1

Analysis of Air Flow Calibration

a. Physics of Measurements:

At room temperature, all gases obey - to a very close approximation - the ideal gas equation $PV = nRT$, where P is the pressure in newtons per square meter, V is the volume in cubic meters, n is the number of moles of gas, R is the empirically determined gas constant with the approximate value 8.31 joules/mole degrees Kelvin and T is the temperature in degrees Kelvin.

The method of measuring flow rates in the DigiCal Calibrator is the technique known as the soap film bubble test. A frictionless soap film is suspended perpendicular to the air flow up a small bore tube. This film forms a complete seal across the tube. The effect causes the soap film to move along the tube at exactly the same rate as the air flow. Knowing a measured distance and tube bore size, a volume can be calculated. Thus, a flow rate can be determined by the movement of soap film across a fixed volume per unit of time. This technique is classified as a Primary Standard.[1]

By comparing the four variables of the Ideal Gas Law against this detection technique, the validity of measurement can be accessed. The volume (v) is known and fixed therefore cannot change or be considered variable. The mass (m) of the gas being measured is not changed in this technique as the soap film is simply suspended across the tube cross section and moves with the gas flow rate. Mass is not affected. This leaves pressure and temperature. These are expressed by Boyle's Law $P_1V_1 = P_2V_2$ and Charles Law $V_2 / V_1 = T_2 / T_1$. No pressure changes from the ambient during a test as the soap film is practically frictionless. Temperature has no influence in this type of flow measurement when all elements are at an ambient. This includes the Calibrating device, the flow of gas and room temperature. These conditions are the general circumstances in which tests are performed.

Conclusion: The detection method of measuring flow rates of gases over a fixed volume per given unit of time is for all practical purposes independent of all variables in the Ideal Gas Law. Thus, the DigiCal Calibrator serves as a primary standard calibration method.

[1]Lippman, Morton, "The Industrial Environment - its Evaluation and Control," [U.S. Department of Health, Education and Welfare], NIOSH, 1973, Ch 11, 101 pp

b. Accuracy of Gaseous Flow Measurements

To properly evaluate the accuracy of flowing gases, two parameters must be considered. First, the steadiness of the flow rate must be known. Practically every type of pump creates some pulsing of the flowing gases. Second, the rate of flow can drift up and down over some range. Current battery powered personal air sampling pumps use various techniques to dampen pulsing and special circuitry to monitor pump speed, thereby, attempting to generate constant and steady flows.

The DigiCal Calibrator is an automation of the "classic" technique of using a soap film seal to measure flow over a predetermined volume in a known time. A microprocessor, operating at 6 megahertz per second, detects the passing of the soap film seal over the established flow tube volume and automatically calculates the rate of flow. The typical apparatus, 1,000 ml buret using a stopwatch, can be significantly reduced in size since the microprocessor can detect and measure the speed at 80 microsecond intervals. Compare this speed to a technician's response time. With good precision on a stopwatch, he or she could be repeatable within 50,000 microsecond (0.05 seconds), 625 times slower than the microprocessor.

Consider this analysis: 1,000 cc buret NIST traceable; 0.01 second stopwatch crystal controlled with clock accurate to ± 15 sec per month; 1,000 cc/min steady flow source (constant flow ± 1 cc/min).

Example: Measure the flow rate using 1,000 cc buret by a skilled technician. All devices are at a constant room temperature.

Test	Time	Actual Flow Rate
1	60.06 sec	999.0 cc/min
2	60.00	1000
3	59.94	1001

Note: At 1,000 cc/min of flow ± 0.06 is equal to 1 cc/min change or ±0.1 accuracy. Repeatability is strictly a function of the technicians skill.

Mathematically, it would seem 0.1% accuracy could be obtained using this large volume and a skilled technician with a 1,000 cc/min. steady source. Of course, if the volume is smaller than 1,000 cc or the flow is faster, the percent of accuracy is further reduced by this manual method.

To summarize, the accuracy of measuring air flow relies on quality measurement tools such as NIST traceable buret and crystal control stopwatch. A constant air flow source and a reliable method of detection are the final requirements to achieve repeatable and accurate flow readings.

Section 2

Principle of Operation and Features

a. Detection Principle:

The DigiCal Calibrator utilizes the principle of measuring the flow rate of gases over a fixed volume per unit of time. A Quartz controlled timer is the timing device and the fixed volume is located in the flow cell center tube. A microprocessor measures the time for a frictionless soap film to travel from the first sensor to the second sensor (infrared which detects the passage up the tube) and then calculates the volume per unit of time. The results are displayed in flow rate, cc/min. on a four digit liquid crystal display. The decimal point floats to present the data in the proper range. The timer is capable of detecting a soap film at 80 microsecond intervals. This speed allows under steady flow conditions an accuracy of +/- 0.5% of any display. The unique flow cell can create a soap film over a range of 1 cc/min. to 6,000 cc/min. The flow cell is spillproof when properly filled.

b. Understanding the Display Results

A unique feature of the microcomputer software program is data display. On initiation, the DigiCal display will present 0000's with no decimal point indicated. A series of ---- are displayed while a test is in progress. During sequential tests, the previous reading is added to the current test, divided in half, and displayed. If the previous reading and current reading are different by more than ± 5% a series of EEEE's will flash four times on the display and then display the actual last test result. The next flow readings will start this averaging technique over again. If individual readings are desired without averaging, the "ON" button may be pushed to reset the unit to "0000" following each test. The flashing numbers on the display after a test are for three seconds duration. The purpose is to allow sufficient time for the soap to return to the bottom reservoir.

c. Battery saver

Another feature of the DigiCal Calibrator is the battery saver "automatic shut down". If a test is not conducted within approximately 7 minutes from turn on, the Calibrator will turn itself off. Continuous use of the batteries is rated at 8 hours. The unit may also be operated directly from the A/C charger when batteries are low. All units should be given an initial 16 hour charge prior to use. A low battery light will indicate when it is time to recharge the battery. If stored for a period of 30 days or more, unit will require a 16 hour charge prior to operation.

Section 3

Start Up Procedure

A. Read the previous section of Principle of Operation if unfamiliar with device.

B. Soap volume is not critical, therefore a measured amount is not necessary. The proper amount is that which is sufficient to create a bubble. Simply pour a small amount of soap through the bottom nipple to thoroughly cover the bottom of the flow cell and attach air source to nipple (bottom nipple for pressure, top nipple for vacuum). Excessive amount of soap may cause a continuous stream of bubbles to go up the center tube at high flows.

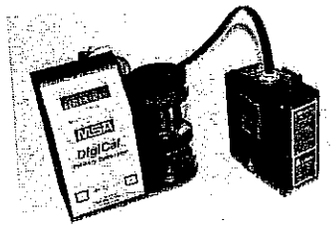

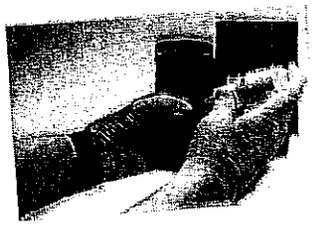

C. Wet flow cell by connecting a pump flowing at 1000 to 2000 cc/min. Initiate soap film up center tube by rapidly pressing button down and releasing. Repeat this procedure until bubble doesn't break. The tube is now wet and tests at any range may be conducted. One minute warm up time is all that is required of the DigiCal.

Section 4

Calibration Of Air Flow Sources With The DigiCal Calibrator

The instructions relate to industrial hygiene air sampling. It, basically, applies to any gases flow rate measurements.

1. Start the pump and allow approximately 5 minutes to stabilize. Perform this step before connecting to flow cell as air flow dries center tube if bubbles are not initiated at intervals.

2. Connect sampling medium to pump by obtaining proper hose adapters for connecting tubing to flow cell. The flow cell hose connectors will accept two common sizes of vinyl tubing (1/4" and 5/16"). A "Luer" fitting is incorporated in the upper hose connector. The upper port is for vacuum and the bottom for pressure. When the upper port is connected to vacuum, the lower port must be open to the atmosphere. Conversely, when the lower port is connected to pressure, the upper port must be open to free air. Never make bubble test with bottom hose connected in series (in line with sampling filter).

3. Wet the flow cell as described in Section 3.

4. Begin Calibration:
   Depress plunger into cell and quickly release.
   Different flow rate can require quicker or slower release of the button.

5. Carefully observe the bubble passing through the sensor zone. Only a single straight bubble, perpendicular to the tube wall, is necessary for an accurate test. If several bubbles go up to the tube at once it will not effect the test data because the first sensor will not reset until the final sensor has been tripped. A good technique is to watch the bubble pass up the tube to ensure a good test has been conducted.

6. Observe the display. A number will be displayed. The decimal point will be appropriately placed. Read section 2-b on features concerning data display.

7. After a 3 second delay from the time the final sensor is tripped another test can be performed.

8. Repeat Steps 5 through 8 for minimum of 3 tests.

Note:
If difficulty is encountered in making a clean single soap film rise up the center tube:
a. Check level of soap in flow cell (Section 3-C).
b. If soap is cloudy (not clear), change the soap solution and clean flow cell.

Section 5

Maintenance Of Calibrator

General Information:
To clean the flow cell, simply remove the three screws holding the flow cell to the bottom of the case. Remove the flow cell and gently flush with tap water. To prevent scratching the acrylic flow cell, wipe "only" with a soft cloth. Do not allow center tube, where sensors detect soap film to be scratched or get dirty. NEVER clean with ACETONE. Use only soap and warm water. When cleaning prior to storage, allow flow cell to air dry. Shake any access water from cell prior to reattaching to base of DigiCal Calibrator.
If stubborn residue persists, remove the bottom plate. Squirt a few drops of soap into slot between base and flow cell to ease removal. Gently insert a coin or flat screw driver into the ridge between the bottom plate and chamber using leverage around the circumference of the cell until the bottom plate is removed. Upon realigning, note scribe mark near one of the screw inserts on bottom plate and align this mark with scribe mark on flow cell near air hose inlet. Again, wet O-ring with soap prior to installation.

To reassemble, realign flow cell in case with hose nipples pointing to back of case and reinstall the three bottom screws.

Section 6

Verification Of Calibration

The calibrator is factory calibrated using a standard traceable to National Institute of Science and Technology (N.I.S.T.). Attempts to verify calibrator against a glass one liter buret should be conducted at 1000 cc/min. for maximum accuracy. The calibrator is linear throughout the entire range.

Section 7

Power For The DigiCal Calibrator

1. The battery supply utilizes 4 Nicad Sub C batteries. The unit will operate up to 8 hours on a fully charged battery. The unit may also be operated directly from the AC charger when batteries are low.

2. Low battery light will indicate the power supply is too low for accurate results.

3. Charge battery pack for 16 hours minimum using the standard charger supplied with the unit.

4. A special power saving feature is the Automatic Shut Off. After 7 minutes of non-use, the DigiCal Calibrator will shut off automatically.

Notes/Precautions

1. Avoid the use of chemical solvents on flow cell, calibrator case and faceplate. Generally, soap and water will remove any dirt. Use of chemicals can result in a damaged cell requiring replacement and calibration.

2. Never pressurize the flow cell at any time with more than 25 inches of water pressure. Overpressurizing can cause leaks in the cell resulting in erroneous flow readings.

3. CAUTION: Do not leave A/C adapter plugged into calibrator when not in use as this could damage the battery supply.

4. NOTE: Hose fitting covers help to reduce evaporation of soap in the flow cell when not in use.

5. Use only DigiCal Calibrator Soap. It is a precisely concentrated and sterilized solution formulated to provide a clean, frictionless soap film bubble over the wide, dynamic range of the calibrator. The sterile nature of the soap is important in the prevention of residue build-up in the flow cell center tube, which could cause inaccurate readings. Do not use any other soap.

Parts List

A/C adapter charger	120V 230V	655112 655168
Soap solution		600920
Instruction manual		655103
Air inlet caps (Pkg. of two)		655102
Sub C battery pack	4 in line	655169

MSA Customer Service 1-800-MSA-2222

MINE SAFETY APPLIANCES COMPANY
P.O. BOX 426
Pittsburgh, PA 15230

MSA

Escort Elf® Pump

instruction manual

⚠ WARNING

THIS MANUAL MUST BE CAREFULLY READ BY ALL INDIVIDUALS WHO HAVE OR WILL HAVE THE RESPONSIBILITY FOR USING OR SERVICING THE PRODUCT. Like any piece of complex equipment, this product will perform as designed only if it is used and serviced in accordance with the manufacturer's instructions. **OTHERWISE, IT COULD FAIL TO PERFORM AS DESIGNED AND PERSONS WHO RELY ON THIS PRODUCT FOR THEIR SAFETY COULD SUSTAIN SEVERE PERSONAL INJURY OR DEATH.**

The warranties made by Mine Safety Appliances Company with respect to the product are voided if the product is not used and serviced in accordance with the instructions in this manual. Please protect yourself and others by following them. We encourage our customers to write or call regarding this equipment prior to use or for any additional information relative to use or repairs.

In the U.S., to contact your nearest stocking location, dial toll-free 1-800-MSA-2222.
To contact MSA International, dial 1-800-672-7777.

© Mine Safety Appliances Company 1997 - All Rights Reserved

Manufactured by
MINE SAFETY APPLIANCES COMPANY
P.O. Box 427, Pittsburgh, Pennsylvania 15230

(L) Rev 4

#13549

⚠ WARNINGS

1. Do not charge the battery pack in areas that may contain a flammable mixture of combustible gases, vapors, or dust and air; otherwise, an explosion may occur because a source of ignition exists during charging.
2. Do not operate the pump in oxygen-enriched atmospheres (more than 21% oxygen) containing combustible gases, vapors, or other materials. Fire or explosion can result from operating in these atmospheres.
3. Operate the pump with MSA p/n 497702 battery pack only. Do not use other batteries or power sources.
4. When using the pump in a hazardous area (with respect to fire or explosion) as specified in the National Electric Code (NEC) Article 500 - Hazardous (Classified) Locations, the pump must be labeled stating that it meets the design criteria of the specific Class, Division and Group. Users must operate the pump in accordance with the instructions for that Class, Division and Group. A copy of the NEC Code can be obtained from the National Fire Protection Association, Batterymarch Park, Quincy, MA 02269.
5. Use only genuine MSA replacement parts when performing maintenance procedures described in this manual; failure to do so may seriously impair the ESCORT ELF Pump performance. Repair or alteration beyond the scope of these maintenance instructions or by anyone other than authorized MSA service personnel could cause the product to fail to perform as designed, and persons who rely on this product for their safety could sustain severe personal injury or death.

FAILURE TO COMPLY WITH THE ABOVE WARNINGS CAN RESULT IN SERIOUS PERSONAL INJURY OR DEATH

⚠ CAUTIONS

1. Do not use the pump with organic fluids in an impinger without an absorber trap; otherwise, the pump will be damaged.
2. Use only an MSA Omega (Ω) Charger to charge the pump.
3. If, after thoroughly reading this manual, you are uncertain of the installation, operation, or maintenance procedures, call 1-800-MSA-2222 for assistance.

Table of Contents

Section 1
General Information 1-1

Introduction 1-1
Operating Specifications 1-2

Section 2
Theory of Operation 2-1

Introduction 2-1
Functional Description of Operation 2-1
Figure 2-1. Flow-Feedback Control System 2-2
LED Indicator Operation 2-3

Section 3
Operation 3-1

Charging the Battery Pack 3-1
⚠ WARNING 3-1
⚠ CAUTION 3-1
Operating Time 3-1
Personal/Area Sampling 3-2
Figure 3-1. Typical Operating Time Graph 3-2
Operating the Pump 3-3

Section 4
Routine Maintenance 4-1

Periodic Maintenance 4-1
Checking the Inlet Filter 4-1
Figure 4-1. Checking the Inlet Filter 4-1
Filter Replacement 4-2
Frit Replacement 4-2
Battery Pack Replacement 4-2
Figure 4-2. Replacing the Battery Pack 4-3

Section 5
ELF Sensor Calibration 5-1

Section 6
ELF Sensor Calibration
for Pumps used in the U.S. Government Mine Safety and Health Administration (MSHA) Coat Mine Dust Sampling Program 6-1

Section 7
Repairs and Replacement Parts 7-1

Troubleshooting 7-1
⚠ WARNING 7-1
Corrective Maintenance 7-1
Table 7-1. Troubleshooting Guidelines 7-2
Unplugging the Electrical Connectors 7-3
Reattaching the Electrical Connectors 7-3
Pump & Drive Assembly, Outlet Dampener, or Pressure Sensor Replacement 7-4
Printed Circuit Control Board Replacement 7-4
Obtaining Replacement Parts 7-5
Figure 7-1. Replacement Parts 7-6
Table 7-2. Replacement Parts List 7-7
Figure 7-2. Replacement Parts (cont.) 7-8

Section 1
General Information

Introduction

The ESCORT ELF Pump introduces a totally new, patented concept of flow control and flow readout (U.S. Patent 5,295,790). The heart of this new system is the electronic laminar flow sensor. The ELF sensor combines a laminar flow element and a differential pressure sensor to measure sample volume flow rate. This measure of flow rate is not affected by changes in sample loading or the other factors that affect rotameter-type indicators used in other pumps. The ELF sensor provides an electronic signal which is linearly related to flow rate. This signal is used in the pump control circuit to maintain the chosen flow rate constant to within ±2.5% and is used in the readout circuit to allow the digital display of the actual flow rate to within ±0.1 liters per minute (LPM).

The ESCORT ELF sensor and control circuitry are very stable both in storage and use. Together they form a secondary standard to maintain the calibration accuracy for at least 200 hours of pump usage. A built-in operating time totalizer helps remind the user of the total operating hours since the last calibration check was performed against a primary flow standard. This totalizer automatically resets to 0 when a calibration is performed. If the pump is used in the coal mine dust sampling program, these calibration checks should be done after each 200 hours of use. If the pump is used for OSHA compliance sampling, the recalibration should be performed monthly.

Operating Specifications	
ELECTRICAL CHARACTERISTICS	
POWER SUPPLY	4.8-volt battery pack of four nickel-cadmium cells
BATTERY PACK CAPACITY	1.8 ampere hour
BATTERY PACK RECHARGE TIME	14-16 hours (overnight) with recommended chargers
CHARGING TEMPERATURE	10° to 30°C (50° to 86°F)
TYPICAL BATTERY PACK LIFE	300 or more charging cycles
OPERATING AND PHYSICAL CHARACTERISTICS	
FLOW CONTROL	Volumetric flow rate is controlled at the set-point with automatic compensation for battery voltage, altitude, temperature, and sample load changes
OPERATING RANGE	0.5 TO 3.0 LPM 5 to 30 inches water load up to 1.0 LPM; up to 30 inches of water load up to 2.0 LPM; up to 20 inches of water load up to 2.5 LPM; and up to 10 inches of water load up to 3.0 LPM
FLOW BLOCKAGE DETECTION	When flow is blocked the FLOW FAULT LED indicator lights and stays lighted until the cause of flow blockage is removed. If blocked for longer than 1.5 minutes, the pump shuts down. Pumps that are ordered for coal mine dust sampling are factory-programmed to *not* shut down
FLOW READOUT	Liquid crystal digital display with 0.01 LPM resolution from 0.5 to 3.0 LPM Accuracy ±2.5% from 1.0 to 3.0 LPM, 0° to 45°C ±5% from 1.0 to 3.0 LPM, -20° to 0°C and 45° to 55°C ±5% from 0.5 to 0.9 LPM, 0° to 45°C

Operating Specifications	
ELAPSED TIME READOUT	Quartz controlled timer reads out to 999 minutes in 1-minute steps. Holds last reading after either flow fault or low battery shut-down, and when pump is OFF or in HOLD mode; resets to zero automatically when pump is turned ON. Timer does not count time when FLOW FAULT LED is lighted.
SCHEDULED CALIBRATION	The pump has an operating hours totalizer to help remind user of the need for periodic calibration checks.
OPERATING TIME	Varies with flow rate, sampling device loading and temperature. Minimum eight-hour operation at 2.5 LPM with 20-inch water load. (See FIGURE 3-1.)
LOW BATTERY FUNCTION	The pump shuts down and lights the LOW BATT LED when battery voltage drops below 4.1 volts
TEMPERATURE COMPENSATION	0° to 45°C (32° to 113°F) ±2.5% accuracy -20° to 0°C and 45° to 65°C (-4° to +149°F and 112° to 149°F) ±5.0% accuracy
ALTITUDE COMPENSATION	Below sea-level to at least 10,000 ft.
DIMENSIONS	2 inches deep x 4 inches high x 3-7/8 inches wide (5.1 centimeters deep x 10.3 centimeters high x 9.8 centimeters wide)
WEIGHT	19 oz. (550 grams)
CASE	Case plastic is electrically conductive to reduce radio frequency interference; an optional leather case is available for pump protection during rough usage such as underground mining or construction and demolition work areas
SERIAL NUMBER IDENTIFICATION	Located on the side of the case under the battery pack (include number in correspondence with MSA)

Section 2
Theory of Operation

Introduction

This section describes the operation of the sample flow control and readout circuitry of the ESCORT ELF Pump.

Functional Description of Operation

The ESCORT ELF Pump contains a rechargeable battery pack, a motor-driven pump, the ELF sensor, and the electronic circuit to control and display the flow rate.

The battery pack consists of four nickel-cadmium cells. The cells are connected in series with a current limiting resistor to allow use in hazardous atmospheres (see "Warnings"). The pack also has a PTC resistor which functions as a self-resetting circuit breaker to prevent damage to the pack if the output terminals are accidentally shorted.

The motor-driven pump consists of an inlet pulsation dampener, a diaphragm pump, and silicone rubber inlet and exhaust valves. The diaphragm is driven by the motor to make one pump stroke with each revolution. The pulsation dampener acts as an elastic storage chamber to smooth the individual pump pulses to minimize their effect on the sampling devices connected to the pump inlet.

The ELF sensor consists of a laminar flow element and a pressure sensor. All of the air flow through the pump passes from the exhaust port of the pump and through the laminar flow element. The element is a hollow cylinder of porous stainless steel. The air flowing through the narrow passages in the cylinder produces an air pressure difference between the outer and inner walls of the cylinder. This difference is

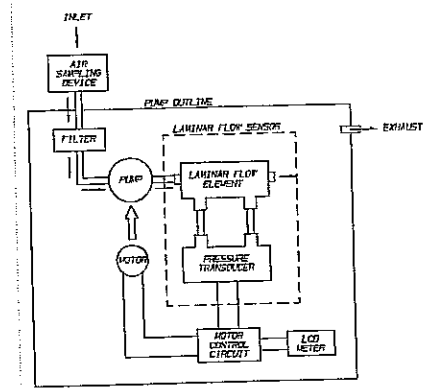

Figure 2-1. Flow-Feedback Control System

monitored by connections to the high and low pressure taps of a sensitive differential pressure sensor. The electrical signal from the sensor is a linear voltage, which is directly related to the air flow through the laminar element. This signal is compared to the flow set point in the electronic circuit and is used to control the flow at the set point. Any deviation in flow rate is sensed

and the motor power is adjusted to maintain the preset flow rate. In the case of a blocked flow or operation beyond the pump capacity where the flow cannot be brought to within ±0.1 LPM of the set point, the flow fault LED will be lighted.

LED Indicator Operation

- The RUN/HOLD LED assures the user that the unit is operating, even in poorly lit, noisy environments.
- The RUN/HOLD LED also indicates the HOLD function. If the pump is switched to HOLD, the pump shuts down, the timer stops, and the LED is switched to a blinking mode. When the RUN/HOLD switch is pressed again, the pump will restart and the timer will continue from its "hold" value.
- The LOW BATT LED indicates operation of the low battery detection circuit. When the battery pack drops to 4.1 volts, the circuit causes the pump to shut down, the timer to stop, and the LOW BATT LED to light. This limits further battery drain to just a few milliamperes, which, in turn, helps prevent deep discharging and battery pack damage upon recharging. It also helps prevent the invalidation of the sample being taken, because the timer stores the actual sample time and the flow rate is controlled up to the time of shut-down.
- The FLOW FAULT LED indicates operation of the flow blockage detection circuit. If the sample inlet (or the sampling device connected to the pump) is blocked, the FLOW FAULT LED lights until the cause of the flow fault is removed.
- The pump is normally factory-programmed so that a fault longer than 1.5 minutes will shut down the pump. The pump may be restarted from a flow fault shutdown by pressing the RUN/ HOLD switch. Restarting in this manner allows continuation of the sample period without having the timer reset to zero.
- The Flow Fault LED is lighted whenever the pump flow rate is more than ±0.1 LPM different from the set-point. It is normal for it to be lighted briefly while the pump is started or when a new set-point is selected.

Section 3
Operation

Charging the Battery Pack

Use any Omega™ charger (for example: P/N 494716, 495965, 800525 or 801759) for charging the battery pack. Remove the protective rubber plug and charge the battery pack for 14 to 16 hours. (Note that charging for longer periods will not reduce battery life, provided the charging is performed at room temperature.) The battery pack can be charged with the pack removed from the pump. Always replace the rubber plug after charging and before using the pump to prevent water entry into the jack.

⚠ WARNING

Do not charge the battery pack in areas that may contain a flammable mixture of combustible gases, vapors, or dust and air; otherwise, an explosion may occur because a source of ignition exists during charging.

⚠ CAUTION

Use only an MSA Omega (Ω) charger from MSA to charge the pump.

Operating Time

The maximum expected operating time for a pump with a fully charged battery pack depends on:

1. The selected flow rate.
2. The vacuum load imposed by the sampling device.
3. The temperature.
4. The age of the battery pack.

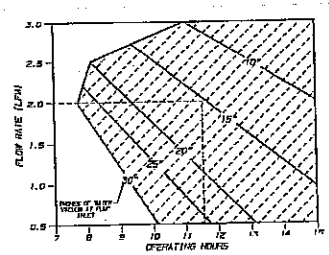

Figure 3-1. Typical Operating Time Graph

See FIGURE 3-1 for approximate operating times. The shaded area shows operating loads and flow rates within the pump specifications. The example shown with dashed lines is for a pump set for 2.0 LPM with a sampling load of 15°; the expected maximum operating time would be 11.5 hours. This figure is based on room temperature operation with a new pack. At 0 degrees Centigrade, the operating time will be reduced by 10%, 20% at -20oC. After several hundred charge/discharge cycles, the pack capacity may be reduced by 20%.

Personal / Area Sampling

The ESCORT ELF Pump is designed for either personal or area sampling of ambient air. It automatically provides a constant volumetric flow rate of the sample air through the sampling device (filter disc, impinger, or absorbent tube) to measure the concentration of airborne mists, dusts, particulates, gases, and vapors in the workplace.

Operating the Pump

1. Charge the battery pack for 16 hours using the MSA Omega (Ω) Charger.
   - Read the WARNING on the battery pack.
2. Connect the desired sampling device to the inlet fitting.
3. Press ON/OFF button until the RUN/HOLD LED lights.
   - The Flow Fault and Low Bat LEDs will then light. During the time these LEDs are being lighted, a number from 0 to 999 will be displayed. This is the total of the pump's operating hours since its last calibration.
   - When all three LEDs are lighted, the display changes to 8.88 LPM/MINS, to show all segments are functional.
   - The pump will then begin operation. The LOW BAT LED will be dark if the battery voltage is above 4.1 volts. The Flow Fault LED will be dark when the flow rate is within 0.1 LPM of the setpoint.
4. Use the ↑ and ↓ switch buttons to adjust the flow setpoint if a new flow rate is desired. When either button is pressed:
   - RUN/HOLD LED will be dark
   - Display will show the flow setpoint being stepped up or stepped down to the new setpoint.
5. The RUN/HOLD button may be pressed to interrupt sampling without causing the timer to reset to zero.
6. Press the ON/OFF button at the end of sampling.
   - Total sample minutes will be on the display and will remain until the pump is turned ON again.
7. Check calibration monthly (every 200 hours of use for coal mine dust sampling).
8. Operate the pump with a sampling device connected to the inlet. Operation without a sampler attached will reduce the life of the pump inlet filter. Operation at very low flow rates may be unstable without an attached sampling device, such as a charcoal tube.

Section 4
Routine Maintenance

Periodic Maintenance

Checking the Inlet Filter

The pump inlet contains dust and water filters to protect the pump from particles and water in the sample air (FIGURE 4-1). If the filters become clogged, the sample flow may be blocked or an extra load placed on the pump; therefore, check the filters regularly.

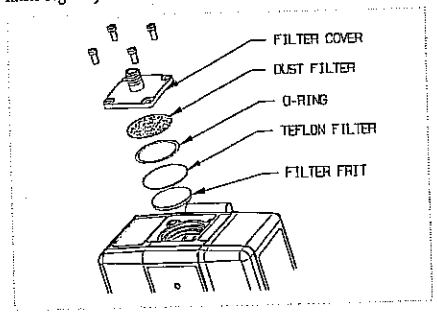

Figure 4-1. Checking the Inlet Filter

The frequency of the checks should depend on the amount of pump usage and the concentration of particles allowed to enter the pump. Usually, only the dust filter needs to be replaced. The Teflon* water filter should rarely need to be replaced. The water filter is very fragile and must be handled with care. Even a tiny pin hole will destroy its function. The filter frit should never need to be replaced if the other filters are maintained.

Filter Replacement

1. Remove the four screws holding the filter cover and O-ring.
2. Replace the filter with a new one.
3. Re-assemble the O-ring and cover.

Frit Replacement

1. Stab the frit center with a small screwdriver, and lift it out.
2. Press in a new frit.
3. Re-assemble the Teflon and dust filters, O-ring, and cover.

Battery Pack Replacement

(FIGURE 4-2 illustrates the battery pack.)

1. Remove the two screws securing the battery pack to the case.
2. Separate the pack from the case.
3. Make sure that the O-ring is in place on the replacement pack. Then, slide the pack into the pump case while pressing the case front and back to make sure the case edges go inside the edges of the pack.
4. Insert the two screws and tighten.

* Teflon is a trademark of the du Pont Company

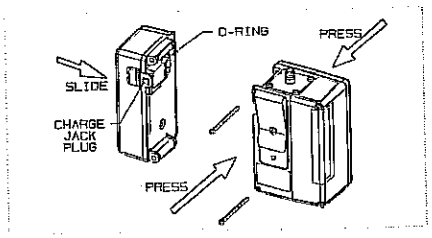

Figure 4-2. Replacing the Battery Pack

Section 5
ELF Sensor Calibration

1. Check pump inlet filter for dust; replace if heavily loaded.
2. Turn ON the pump and allow it to reach its flow rate setting.
3. If the pump is not set for 2.50 LPM, set it to 2.50.
4. Allow the pump to operate for 10 to 15 minutes at 2.50 LPM. To check for leaks, temporarily block the pump inlet; 0.02 LPM or less should be displayed. If not, check the inlet filter cover and o-ring for correct assembly.
5. Leave the pump set for 2.50 LPM and turn OFF the pump.
6. Connect a primary calibration standard to the pump.
7. Turn ON the pump; as the pump goes through its self-check sequence, press and hold the ON/OFF and RUN/HOLD switches simultaneously until the display reads CAL. Immediately release both buttons.

   NOTE: Failure to release both buttons will turn OFF the pump.

   - The display will show CAL and a countdown sequence of numbers from 9 through 0; thereafter, it will alternately display CAL and 2.50 LPM.
8. Operate the calibration standard and obtain at least six readings which are very close to one another.
9. Use the ↑ and ↓ switch buttons to step the pump display up or down until it agrees exactly with the average of the six readings.
10. Turn OFF the pump; the ELF sensor is now calibrated. Repeat monthly or every 200 hours of use.
11. When you next turn ON the pump, the operating hours will be reset to 0 and be displayed during the lighting of the FLOW FAULT and LOW BAT LEDs.

The BIOS DryCal should be used to calibrate or check the flow rate of an MSA Escort ELF pump only if an isolating flow restrictor (e.g., a filter or an orifice such as P/N 632646) providing at least 10" WC is placed in line between the pump and the calibrator. Failure to use such an isolation technique can cause a calibration inaccuracy on the order of 2% and is not recommended.

Section 6 ELF Sensor Calibration for Pumps used in the U.S. Government Mine Safety and Health Administration (MSHA) Coal Mine Dust Sampling Program

1. Check pump inlet filter for dust; replace if heavily loaded.
2. Turn ON the pump and allow it to reach its flow rate setting.
3. If the pump is not set for 2.00 LPM, set it to 2.00.
4. Allow the pump to operate for 10 to 15 minutes at 2.00 LPM. To check for leaks, temporarily block the pump inlet; 0.02 LPM or less should be displayed. If not, check the inlet filter cover and o-ring for correct assembly.
5. Leave the pump set for 2.00 LPM and turn OFF the pump.
6. Connect a primary calibration standard to the pump.
7. Turn ON the pump; as the pump goes through its self-check sequence, press and hold the ON/OFF and RUN/HOLD switches simultaneously until the display reads CAL. Immediately release both buttons.

   NOTE: Failure to release both buttons will turn OFF the pump.

   - The display will show CAL and a countdown sequence of numbers from 9 through 0; thereafter, it will alternately display CAL and 2.00 LPM.
8. Operate the calibration standard and obtain at least six readings which are very close to one another.

9. Use the ↑ and ↓ switch buttons to step the pump display up or down until it agrees exactly with the average of the six readings.
10. Turn OFF the pump; the ELF sensor is now calibrated. Repeat every 200 hours of use .
11. When you next turn ON the pump, the operating hours will be reset to 0 and will be displayed during the lighting of the FLOW FAULT and LOW BAT LEDs.

Section 7
Repairs and Replacement Parts

Troubleshooting

TABLE 7-1, "Troubleshooting Guidelines," lists the symptoms of the most common problems; it also lists their probable cause(s) and the action required to correct each problem. Use the guidelines if you cannot calibrate the ESCORT ELF Pump or if the pump does not operate properly. If you cannot resolve a problem by using the guidelines, call 1-800-MSA-2222 to locate a local MSA Repair Center.

⚠ WARNING

Use only genuine MSA replacement parts when performing the maintenance procedures described in this manual. Failure to do so may seriously impair instrument performance. Repair or alteration beyond the scope of these maintenance instructions or by anyone other than an MSA-trained service person could cause the product to fail to perform as designed, and persons who rely on this product for their safety could sustain severe personal injury or death.

Corrective Maintenance

When an inoperative part is located by using TABLE 7-1, Troubleshooting Guidelines, replace it according to one of the replacement procedures later in this section. Also refer to "Obtaining Replacement Parts" later in this section for information on how to order the necessary part from MSA.

Table 7-1. Troubleshooting Guidelines

SYMPTOM	PROBABLE CAUSE	CORRECTIVE ACTION
ON/HOLD LED indicator turns OFF prematurely; FLOW FAULT LED indicator may be ON or OFF and LOW BATT LED is turned ON	1. Inlet filter clogged or blocked with water	1. Replace filter according to "Checking the Inlet Filter"
	2. Battery pack is degraded	2. Install new pack on pump by performing procedure described under "Battery Pack Replacement"
	3. Operation beyond flow and load limits	3. Reduce flow or replace sampler with lower load device
ON/HOLD LED and FLOW FAULT LED indicators turned ON, and pump will not run or, if it does run, no flow is displayed on readout	1. Pump motor connector improperly plugged into PC board	1. Check connector
	2. Pressure sensor connector fault	2. Check connector. Verify five pins are plugged in
	3. Pump motor inoperative	3. Replace pump and motor drive assembly according to procedure under "Replacing the Pump and Drive Assembly"
	4. Pressure sensor or PC board inoperative	4. Replace sensor or PC board
When inlet is blocked, the flow indication is not 0.02 lpm or less	1. Sample flow leaks	1. Check for leaking tube connection or O-ring seal at the inlet filter cover
LED indicator on charger does not turn ON when plug on-line cord is inserted in 115 VAC outlet and plug on charging cord is inserted in jack on battery pack	1. Power source inactive	1. Check and correct cause of power loss
	2. Charger failure	2. Replace charger
	3. Battery pack failure	3. Replace battery pack by performing procedure under "Replacing the Battery Pack"
Desired flow rate cannot be obtained under heavy sampling device loads within regime of FIGURE 3-1	1. Inlet filter partially clogged	1. Replace filter according to instructions under "Checking the Inlet Filter"
	2. Leak exists in sample flow system	2. Check for leaking tube connection or O-ring at the inlet filter cover

Unplugging the Electrical Connectors

Service procedures which require opening the ELF pump case require the unplugging of two electrical connectors:

1. Pull on the motor electrical connector to remove the motor wires from the printed circuit board.
2. Pull on the 5-pin ribbon cable to remove the connector from the ELF sensor.

Reattaching the Electrical Connectors

1. When reattaching the motor connector, make sure the angular ramp at the end faces towards the latch projecting from the printed circuit board socket.

   NOTE: The pump will operate with the connector installed the other way, but the above method is encouraged because the ramp and latch help keep the connector attached as the pump is knocked around during use.

2. When reattaching the connector to the ELF sensor, make sure pins #1 through #5 are straight and in line.

   NOTE: If these pins are bent, use needle-nose pliers to straighten and align them. Pin #6 is intentionally cut off because it is not used in the ELF pump.

3. Pull the cable so that the end of the connector is about 7/8" above the printed circuit board.
4. Hold the pump face in the right hand and position your thumb and forefinger around the top left hand corner of the pump face.
5. Hold the connector with these two fingers and hold the pump case with the left hand.
6. Position the connector so that an end pin is just inside the funnel opening of the corresponding pin socket.
7. Gradually tilt the connector to get the next pin just inside its socket, and repeat this process until all five pins are just inside their corresponding sockets.
8. Slowly press the connector onto the pins until they "bottom out."

9. Inspect the connector at the top and bottom to make sure all pins are correctly inserted.

Pump & Drive Assembly, Outlet Dampener, or Pressure Sensor Replacement

1. Remove two screws securing the battery pack to the case.
2. Remove the battery pack.
3. Remove the two screws securing the pump case.
4. Pull the 5-pin ribbon connector from the pressure sensor.
5. Pull the motor electrical connector from the PC board.
6. Remove the two screws securing the pump mounting collar to the back of the case.
7. Lift out the pump and drive while removing the inlet dampener connection from the fitting.

   NOTE: A drop of soap solution (SNOOP*) "worked in" at the end of the rubber tube makes removal easier and will prevent tearing the rubber tube.
8. Remove the two screws securing the pressure sensor.
9. Remove the pressure sensor and be careful not to drop it, even to the table top.
10. Remove the outlet dampener if it is to be replaced.
11. Install the replacement pump and drive, outlet dampener or pressure sensor by reversing this procedure.

    NOTE: Wetting the end of the outlet dampener will make sliding it over the sensor body easier. Make sure both cuffs are completely in the grooves.

    NOTE: Tighten the upper motor collar screw before tightening the lower screw when installing the new pump and drive.

Printed Circuit Control Board Replacement

1. Remove the two screws securing the battery pack.
2. Remove the battery pack.

*SNOOP is a trademark of Nupro Company

3. Remove the two screws securing the pump case.
4. Pull the connector from the pressure sensor.
5. Pull the motor electrical connector from the printed circuit board.
7. Remove and save the three screws, two washers and spacer securing the PC board to the pump face.
8. Install the replacement printed circuit board by reversing this procedure.

   NOTE: Be sure the battery connector is mounted with the black wire towards the top of the case.

Obtaining Replacement Parts

The ESCORT ELF Pump parts and part numbers are listed in TABLE 7-2. To obtain parts, service, or information in the U.S., call 1-800-MSA-2222 to find the nearest customer service center. To reach MSA International, call 1-412-967-3000.

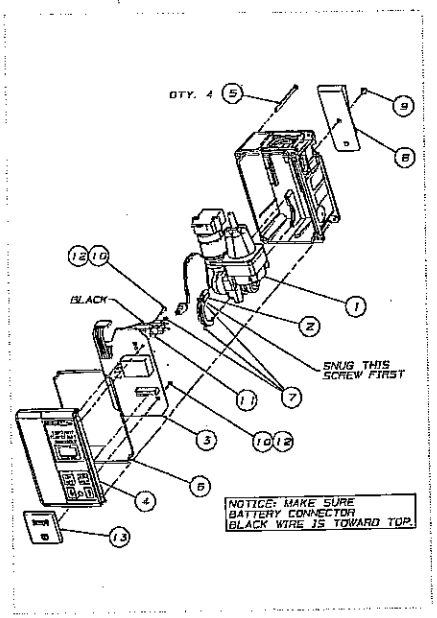

Figure 7-1. Replacement Parts

Table 7-2. Replacement Parts List

FIGURE 7-1 ITEM NO.	PART/COMPONENT	PART NO.
1	Pump and Flow Assembly, complete	804661
2	Collar	800025
3	Printed Circuit-Board Assembly	813551
4	Pump Face Assembly	813297
5	Screw	636493
6	O-ring	636602
7	Screw	636414
8	Bell Clip	636293
9	Screw	636416
10	Screw	636415
11	Spacer	628852
12	Lockwasher	64095
13	Switch Cover	802361
FIGURE 7-2 ITEM NO.	**PART/COMPONENT**	**PART NO.**
14	Pump and Drive less Pressure Sensor	805285
15	Flow Sensor Only	805285
16	Replacement Sensor Only	805284
17	Motor and Connector Assembly	805286
18	Eccentric and Bearing Assembly	805046
19	Pump Block and Valves Assembly	805360
20	Inlet Dampener	803815
21	Screws	637140
22	Outlet Dampener	804863
FIGURE 4-1	Screw	636418
	Filter Cover	497393
	O-ring	637009
	Inlet dust filter (pack of 5)	808935
	Filter, Teflon	802897
	Filter Felt	800303
FIGURE 4-2	Battery Pack (includes O-ring & Plug)	497702
	O-ring for Battery Pack	636603
	Charge Jack Plug	804158
not shown	Instruction Manual	813549
	Screwdriver	636913
	Leather Case (optional)	811741
	Upgrade Kit (includes printed circuit board and pump face assemblies)	814029

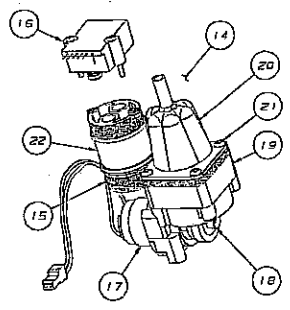

Figure 7-2. Replacement Parts (cont.)

Table 7-2. Replacement Parts List (cont.)

PART/COMPONENT	PART NO.
Kit, Pump Maintenance Parts	602922
Belt Clips	
Filter Cover	
Screws (filter cover)	
O-Rings (battery pack)	
Screws (belt clip)	
Screws (case)	
Polyethylene Discs	
O-Rings (filter cover)	
Inlet Filters	

EPA/625/R-96/010b

Compendium of Methods for the Determination of Toxic Organic Compounds in Ambient Air

Second Edition

Compendium Method TO-10A

Determination Of Pesticides And Polychlorinated Biphenyls In Ambient Air Using Low Volume Polyurethane Foam (PUF) Sampling Followed By Gas Chromatographic/Multi-Detector Detection (GC/MD)

Center for Environmental Research Information
Office of Research and Development
U.S. Environmental Protection Agency
Cincinnati, OH 45268

January 1999

Method TO-10A
Acknowledgements

This Method was prepared for publication in the *Compendium of Methods for the Determination of Toxic Organic Compounds in Ambient Air, Second Edition* (EPA/625/R-96/010b), which was prepared under Contract No. 68-C3-0315, WA No. 3-10, by Midwest Research Institute (MRI), as a subcontractor to Eastern Research Group, Inc. (ERG), and under the sponsorship of the U.S. Environmental Protection Agency (EPA). Justice A. Manning, John Burckle, and Scott R. Hedges, Center for Environmental Research Information (CERI), and Frank F. McElroy, National Exposure Research Laboratory (NERL), all in the EPA Office of Research and Development (ORD), were responsible for overseeing the preparation of this method. Additional support was provided by other members of the Compendia Workgroup, which include:

- John Burckle, U.S. EPA, ORD, Cincinnati, OH
- James L. Cheney, Corps of Engineers, Omaha, NB
- Michael Davis, U.S. EPA, Region 7, KC, KS
- Joseph B. Elkins Jr., U.S. EPA, OAQPS, RTP, NC
- Robert G. Lewis, U.S. EPA, NERL, RTP, NC
- Justice A. Manning, U.S. EPA, ORD, Cincinnati, OH
- William A. McClenny, U.S. EPA, NERL, RTP, NC
- Frank F. McElroy, U.S. EPA, NERL, RTP, NC
- Heidi Schultz, ERG, Lexington, MA
- William T. "Jerry" Winberry, Jr., EnviroTech Solutions, Cary, NC

Method TO-10 was originally published in March of 1989 as one of a series of peer reviewed methods in the second supplement to *"Compendium of Methods for the Determination of Toxic Organic Compounds in Ambient Air,"* EPA 600/4-89-018. In an effort to keep these methods consistent with current technology, Method TO-10 has been revised and updated as Method TO-10A in this Compendium to incorporate new or improved sampling and analytical technologies. In addition, this method incorporates ASTM Method D 4861-94, *Standard Practice for Sampling and Analysis of Pesticides and Polychlorinated Biphenyls in Air.*

This Method is the result of the efforts of many individuals. Gratitude goes to each person involved in the preparation and review of this methodology.

Author(s)
- Robert G. Lewis, U.S. EPA, NERL, RTP, NC

Peer Reviewers
- William T. "Jerry" Winberry, Jr., EnviroTech Solutions, Cary, NC
- Irene D. DeGraff, Supelco, Bellefonte, PA
- Lauren Drees, U.S. EPA, NRMRL, Cincinnati, OH

Finally, recognition is given to Frances Beyer, Lynn Kaufman, Debbie Bond, Cathy Whitaker, and Kathy Johnson of Midwest Research Institute's Administrative Services staff whose dedication and persistence during the development of this manuscript has enabled it's production.

DISCLAIMER

This Compendium has been subjected to the Agency's peer and administrative review, and it has been approved for publication as an EPA document. Mention of trade names or commercial products does not constitute endorsement or recommendation for use.

METHOD TO-10A

Determination Of Pesticides And Polychlorinated Biphenyls In Ambient Air Using Low Volume Polyurethane Foam (PUF) Sampling Followed By Gas Chromatographic/Multi-Detector Detection (GC/MD)

TABLE OF CONTENTS

		Page
1.	Scope	10A-1
2.	Summary of Method	10A-1
3.	Significance	10A-2
4.	Applicable Documents	10A-2
	4.1 ASTM Standards	10A-2
	4.2 EPA Documents	10A-2
	4.3 Other Documents	10A-3
5.	Definitions	10A-3
6.	Interferences	10A-3
7.	Equipment and Materials	10A-4
	7.1 Materials for Sample Collection	10A-4
	7.2 Equipment for Analysis	10A-5
	7.3 Reagents and Other Materials	10A-5
8.	Assembly and Calibration of Sampling System	10A-6
	8.1 Description of Sampling Apparatus	10A-6
	8.2 Calibration of Sampling System	10A-6
9.	Preparation of PUF Sampling Cartridges	10A-6
10.	Sampling	10A-7
11.	Sample Extraction Procedure	10A-8
	11.1 Sample Extraction	10A-8
	11.2 Sample Cleanup	10A-9

TABLE OF CONTENTS (continued)

		Page
12.	Analytical Procedure	10A-10
	12.1 Analysis of Organochlorine Pesticides by Capillary Gas Chromatography with Electron Capture Detector (GC/ECD)	10A-10
	12.2 Analysis of Organophosphorus Pesticides by Capillary Gas Chromatography with Flame Photometric or Nitrogen-Phosphorus Detectors (GC/FPD/NPD)	10A-11
	12.3 Analysis of Carbamate and Urea Pesticides by Capillary Gas Chromatography with Nitrogen-Phosphorus Detector	10A-11
	12.4 Analysis of Carbamate, Urea, Pyrethroid, and Phenolic Pesticides by High Performance Liquid Chromatography (HPLC)	10A-11
	12.5 Analysis of Pesticides and PCBs by Gas Chromatography with Mass Spectrometry Detection (GC/MS)	10A-12
	12.6 Sample Concentration	10A-12
13.	Calculations	10A-13
	13.1 Determination of Concentration	10A-13
14.	Sampling and Retention Efficiencies	10A-15
	14.1 General	10A-15
	14.2 Determining SE	10A-15
15.	Performance Criteria and Quality Assurance	10A-17
	15.1 Standard Operating Procedures (SOPs)	10A-17
	15.2 Process, Field, and Solvent Blanks	10A-17
	15.3 Sampling Efficiency and Spike Recovery	10A-17
	15.4 Method Precision and Bias	10A-18
	15.5 Method Safety	10A-18
16.	References	10A-18

METHOD TO-10A

Determination Of Pesticides And Polychlorinated Biphenyls In Ambient Air Using Low Volume Polyurethane Foam (PUF) Sampling Followed By Gas Chromatographic/Multi-Detector (GC/MD) Detection

1. Scope

1.1 This document describes a method for sampling and analysis of a variety of common pesticides and for polychlorinated biphenyls (PCBs) in ambient air. The procedure is based on the adsorption of chemicals from ambient air on polyurethane foam (PUF) or a combination of PUF and granular sorbent using a low volume sampler.

1.2 The low volume PUF sampling procedure is applicable to multicomponent atmospheres containing common pesticide concentrations from 0.001 to 50 $\mu g/m^3$ over 4- to 24-hour sampling periods. The limits of detection will depend on the nature of the analyte and the length of the sampling period.

1.3 Specific compounds for which the method has been employed are listed in Table 1. The analytical methodology described in Compendium Method TO-10A is currently employed by laboratories throughout the U.S. The sampling methodology has been formulated to meet the needs of common pesticide and PCB sampling in ambient air.

1.4 Compendium Method TO-10 was originally published in 1989. The method was further modified for indoor air application in 1990. In an effort to keep the method consistent with current technology, Compendium Method TO-10 has incorporated ASTM Method D4861-94 (1) and is published here as Compendium Method TO-10A.

2. Summary of Method

2.1 A low-volume (1 to 5 L/minute) sample is used to collect vapors on a sorbent cartridge containing PUF or PUF in combination with another solid sorbent. Airborne particles may also be collected, but the sampling efficiency is not known (2).

2.2 Pesticides and other chemicals are extracted from the sorbent cartridge with 5 percent diethyl ether in hexane and determined by gas chromatography coupled with an electron capture detector (ECD), nitrogen-phosphorus detector (NPD), flame photometric detector (FPD), Hall electrolytic conductivity detector (HECD), or a mass spectrometer (MS). For common pesticides, high performance liquid chromatography (HPLC) coupled with an ultraviolet (UV) detector or electrochemical detector may be preferable. This method describes the use of an electron capture detector.

2.3 Interferences resulting from analytes having similar retention times during GC analysis are resolved by improving the resolution or separation, such as by changing the chromatographic column or operating parameters, or by fractionating the sample by column chromatography.

3. Significance

3.1 Pesticide usage and environmental distribution are common to rural and urban areas of the United States. The application of pesticides can cause potential adverse health effects to humans by contaminating soil, water, air, plants, and animal life. However, human exposure to PCBs continues to be a problem because of their presence in the environment.

3.2 Many pesticides and PCBs exhibit bioaccumulative, chronic health effects; therefore, monitoring the presence of these compounds in ambient air is of great importance.

3.3 Use of a portable, low volume PUF sampling system allows the user flexibility in locating the apparatus. The user can place the apparatus in a stationary or mobile location. The portable sampling apparatus may be positioned in a vertical or horizontal stationary location (if necessary, accompanied with supporting structure). Mobile positioning of the system can be accomplished by attaching the apparatus to a person to test air in the individual's breathing zone.

3.4 Moreover, this method has been successfully applied to measurement of common pesticides in outdoor air, indoor air and for personal respiratory exposure monitoring (3).

4. Applicable Documents

4.1 ASTM Standards

- D1356 *Definition of Terms Relating to Atmospheric Sampling and Analysis*
- D4861-94 *Standard Practice for Sampling and Analysis of Pesticides and Polychlorinated Biphenyls in Air*
- E260 *Recommended Practice for General Gas Chromatography Procedures*
- E355 *Practice for Gas Chromatography Terms and Relationships*
- D3686 *Practice for Sampling Atmospheres to Collect Organic Compound Vapors (Activated Charcoal Tube Adsorption Method*
- D3687 *Practice for Analysis of Organic Compound Vapors Collected by the Activated Charcoal Tube Adsorption*
- D4185 *Practice for Measurement of Metals in Workplace Atmosphere by Atomic Absorption Spectrophotometry*

4.2 EPA Documents

- *Compendium of Methods for the Determination of Toxic Organic Compounds in Ambient Air: Method TO-10, Second Supplement*, U. S. Environmental Protection Agency, EPA 600/4-89-018, March 1989.
- *Manual of Analytical Methods for Determination of Pesticides in Humans and Environmental Standards*, U. S. Environmental Protection Agency, EPA 600/8-80-038, June 1980.
- *Compendium of Methods for the Determination of Air Pollutants in Indoor Air: Method IP-8*, U. S. Environmental Protection Agency, EPA 600/4-90-010, May 1990.

4.3 Other Documents

- Code of Federal Regulations, Title 40, Part 136, Method 604

5. Definitions

[Note: Definitions used in this document and in any user-prepared Standard operating procedures (SOPs) should be consistent with ASTM D1356, E260, and E355. All abbreviations and symbols are defined within this document at point of use.]

5.1 Sampling efficiency (SE)-ability of the sampling medium to trap analytes of interest. The percentage of the analyte of interest collected and retained by the sampling medium when it is introduced as a vapor in air or nitrogen into the air sampler and the sampler is operated under normal conditions for a period of time equal to or greater than that required for the intended use is indicated by %SE.

5.2 Retention efficiency (RE)-ability of sampling medium to retain a compound added (spiked) to it in liquid solution.

5.3 Static retention efficiency-ability of the sampling medium to retain the solution spike when the sample cartridge is stored under clean, quiescent conditions for the duration of the test period.

5.4 Dynamic retention efficiency (RE_d)-ability of the sampling medium to retain the solution spike when air or nitrogen is drawn through the sampling cartridge under normal operating conditions for the duration of the test period. The dynamic RE is normally equal to or less than the SE.

5.5 Retention time (RT)-time to elute a specific chemical from a chromatographic column, for a specific carrier gas flow rate, measured from the time the chemical is injected into the gas stream until it appears at the detector.

5.6 Relative retention time (RRT)-a rate of RTs for two chemicals for the same chromatographic column and carrier gas flow rate, where the denominator represents a reference chemical.

5.7 Surrogate standard-a chemically inert compound (not expected to occur in the environmental sample) that is added to each sample, blank, and matrix-spiked sample before extraction and analysis. The recovery of the surrogate standard is used to monitor unusual matrix effects, gross sample processing errors, etc. Surrogate recovery is evaluated for acceptance by determining whether the measured concentration falls within acceptable limits.

6. Interferences

6.1 Any gas or liquid chromatographic separation of complex mixtures of organic chemicals is subject to serious interference problems due to coelution of two or more compounds. The use of capillary or microbore columns with superior resolution or two or more columns of different polarity will frequently eliminate these problems. In addition, selectivity may be further enhanced by use of a MS operated in the selected ion monitoring (SIM) mode as the GC detector. In this mode, co-eluting compounds can often be determined.

6.2 The ECD responds to a wide variety of organic compounds. It is likely that such compounds will be encountered as interferences during GC/ECD analysis. The NPD, FPD, and HECD detectors are element specific, but are still subject to interferences. UV detectors for HPLC are nearly universal, and the electrochemical detector may also respond to a variety of chemicals. Mass spectrometric analyses will generally provide positive identification of specific compounds.

6.3 PCBs and certain organochlorine pesticides (e.g., chlordane) are complex mixtures of individual compounds which can cause difficulty in accurately quantifying a particular formulation in a multiple component mixture. PCBs may interfere with the determination of pesticides.

6.4 Contamination of glassware and sampling apparatus with traces of pesticides or PCBs can be a major source of error, particularly at lower analyte concentrations. Careful attention to cleaning and handling procedures is required during all steps of sampling and analysis to minimize this source of error.

6.5 The general approaches listed below should be followed to minimize interferences.

6.5.1 Polar compounds, including certain pesticides (e.g., organophosphorus and carbamate classes) can be removed by column chromatography on alumina. Alumina clean-up will permit analysis of most organochlorine pesticides and PCBs (4).

6.5.2 PCBs may be separated from other organochlorine pesticides by column chromatography on silicic acid (5,6).

6.5.3 Many pesticides can be fractionated into groups by column chromatography on Florisil (6).

7. Equipment and Materials

7.1 Materials for Sample Collection

7.1.1 Continuous-Flow Sampling Pump (see Figure 1). The pump should provide a constant air flow (≤±5%), be quiet and unobtrusive, with a flow rate of 1 to 5 L/min. Sources of equipment are Supelco, Supelco Park, Bellefonte, PA; SKC, 334 Valley View Road, Eighty Four, PA and other manufacturers.

7.1.2 Sampling Cartridge (see Figure 2). Constructed from a 20-mm (I.D.) x 10-cm borosilicate glass tube drawn down to a 7-mm (O.D.) open connection for attachment to the pump by way of flexible tubing (see Figure 1).

7.1.3 Sorbent, Polyurethane Foam (PUF). Cut into a cylinder, 22-mm I.D. and 7.6-cm long, fitted under slight compression inside the cartridge. The PUF should be of the polyether type, (density of 0.0225 g/cm^3). This is the type of foam used for furniture upholstery, pillows, and mattresses. The PUF cylinders (plugs) should be slightly larger in diameter than the internal diameter of the cartridge. The PUF sorbent may be cut by one of the following means:

- With a high-speed cutting tool, such as a motorized cork borer. Distilled water should be used to lubricate the cutting tool.
- With a hot wire cutter. Care should be exercised to prevent thermal degradation of the foam.
- With scissors, while plugs are compressed between the 22-mm circular templates.

Alternatively, pre-extracted PUF plugs and glass cartridges may be obtained commercially.

7.1.4 Particle Filter. The collection efficiency of PUF for small-diameter (0.1 to 1 μm) airborne particles is only about 20% (7). However, most pesticides and PCBs exist in air under steady-state conditions primarily as vapors (8). Most particulate-associated pesticides or PCBs, if any, will also tend to be vaporized from filters after collection (9). Collocated sampling with and without a quartz-fiber pre-filter has yielded indistinguishable results for a broad spectrum of pesticides and PCBs found in indoor air (10).

7.1.4.1 An open-face filter may be attached to the sampling cartridge by means of a union for 1-in. (25.4-mm) tubing.

7.1.4.2 A 32-mm diameter quartz microfiber filter (e.g., Palifelex® type 2500 QAT-UP) is placed in the open end of the union and supported by means of a screen or perforated metal plate [e.g., a 304-stainless steel disk, 0.0312-in. (0.8-mm) thick with 1/16-in. (1.6-mm) diameter round perforations at 132 holes per in.^{2} (20 holes/cm^2), 41% open area.]. A 32-mm Viton® O-ring is placed between the filter and outer nut to effect a seal (see Figure 3). This filter holder is available from Supelco Park, Bellefonte, PA; SKC, 334 Forty Eight, PA; and other manufacturers.

7.1.5 Size-Selective Impactor Inlet. A size-selective impactor inlet with an average particle-size cut-point of 2.5 μm or 10 μm mean diameter at a sampling rate of 4 L/min may be used to exclude nonrespirable airborne particulate matter (11). This inlet, particle filter support, sampling cartridge holders are available commercially from Supelco, Supelco Park, Bellefonte, PA; SKC, 334 Forty Eight, PA and University Research Glassware (URG), Chapel Hill, NC.

7.1.6 Tenax-TA. 60/80 mesh, 2,6-diphenylphenylene oxide polymer. Commercially available from Supelco, Supelco Park, Bellefonte, PA and SKC, 334 Forty Eight, PA.

7.2 Equipment for Analysis

7.2.1 Gas Chromatograph (GC). The GC system should be equipped with appropriate detector(s) and either an isothermally controlled or temperature programmed heating oven. Improved detection limits may be obtained with a GC equipped with a cool on-column or splitless injector.

7.2.2 Gas Chromatographic Column. As an example, a 0.32 mm (I.D.) x 30 m DB-5, DB-17, DB-608, and DB-1701 are available. Other columns may also provide acceptable results.

7.2.3 HPLC Column. As an example, a 4.6-mm x 25-cm Zorbax SIL or μBondpak C-18. Other columns may also provide acceptable results.

7.2.4 Microsyringes. 5 μL volume or other appropriate sizes.

7.3 Reagents and Other Materials

7.3.1 Round Bottom Flasks. 500 mL, T 24/40 joints, best source.
7.3.2 Capacity Soxhlet Extractors. 300 mL, with reflux condensers, best source.
7.3.3 Kuderna-Danish Concentrator. 500 mL, with Snyder columns, best source.
7.3.4 Graduated Concentrator Tubes. 10 mL, with 19/22 stoppers, best source.
7.3.5 Graduated Concentrator Tubes. 1 mL, with 14/20 stoppers, best source.
7.3.6 TFE Fluorocarbon Tape. 1/2 in., best source.
7.3.7 Filter Tubes. Size 40 mm (I.D.) x 80 mm.
7.3.8 Serum Vials. 1 mL and 5 mL, fitted with caps lined with TFE fluorocarbon.
7.3.9 Pasteur Pipettes. 9 in., best source.
7.3.10 Glass Wool. Fired at 500°C, best source.
7.3.11 Boiling Chips. Fired at 500°C, best source..
7.3.12 Forceps. Stainless steel, 12 in., best source.
7.3.13 Gloves. Latex or precleaned (5% ether/hexane Soxhlet extracted) cotton.

7.3.14 Steam Bath.
7.3.15 Heating Mantles. 500 mL.
7.3.16 Analytical Evaporator. Nitrogen blow-down.
7.3.17 Acetone. Pesticide quality.
7.3.18 n-Hexane. Pesticide quality.
7.3.19 Diethyl Ether. Preserved with 2% ethanol.
7.3.20 Sodium Sulfate. Anhydrous analytical grade.
7.3.21 Alumina. Activity Grade IV, 100/200 mesh.
7.3.22 Glass Chromatographic Column. 2-mm I.D. x 15-cm long.
7.3.23 Soxhlet Extraction System. Including Soxhlet extractors (500 and 300 mL), variable voltage transformers, and cooling water source.
7.3.24 Vacuum Oven. Connected to water aspirator.
7.3.25 Die.
7.3.26 Ice Chest.
7.3.27 Silicic Acid. Pesticide grade.
7.3.28 Octachloronaphthalene (OCN). Research grade.
7.3.29 Florisil. Pesticide grade.

8. Assembly and Calibration of Sampling System

8.1 Description of Sampling Apparatus

8.1.1 A typical sampling arrangement utilizing a personal air pump is shown in Figure 1. This method is designed to use air sampling pumps capable of pulling air through the sampling cartridge at flow rates of 1 to 5 L/min. The method writeup presents the use of this device.

8.1.2 The sampling cartridge (see Figure 2) consists of a glass sampling cartridge in which the PUF plug or PUF/Tenax® TA "sandwich" is retained.

8.2 Calibration of Sampling System

8.2.1 Air flow through the sampling system is calibrated by the assembly shown in Figure 4. All air sampler must be calibrated in the laboratory before and after each sample collection period, using the procedure described below.

8.2.2 For accurate calibration, attach the sampling cartridge in-line during calibration. Vinyl bubble tubing or other means (e.g., rubber stopper or glass joint) may be used to connect the large end of the cartridge to the calibration system. Refer to ASTM Practice D3686 or D4185, for procedures to calibrate small volume air pumps.

9. Preparation of PUF Sampling Cartridges

9.1 The PUF adsorbent is white and yellows upon exposure to light. The "yellowing" of PUF will not affect its ability to collected pesticides or PCBs.

9.2 For initial cleanup and quality assurance purposes, the PUF plug is placed in a Soxhlet extractor and extracted with acetone for 14 to 24 hours at 4 to 6 cycles per hour.

[Note: If commercially pre-extracted PUF plugs are used, extraction with acetone is not required.]

Follow with a 16-hour Soxhlet extraction with 5% diethyl ether in n-hexane. When cartridges are reused, 5% diethyl ether in n-hexane can be used as the cleanup solvent.

9.3 Place the extracted PUF in a vacuum oven connected to a water aspirator and dry at room temperature for 2 to 4 hours (until no solvent odor is detected). Alternatively, they may be dried at room temperature in an air-tight container with circulating nitrogen (zero grade). Place the clean PUF plug into a labeled glass sampling cartridges using gloves and forceps. Wrap the cartridges with hexane-rinsed aluminum foil and placed in jars fitted with TFE fluorocarbon-lined caps. The foil wrapping may also be marked for identification using a blunt probe.

9.4 Granular sorbents may be combined with PUF to extend the range of use to compounds with saturation vapor pressures greater than 10^{-4} kPa (6). A useful combination trap can be assembled by "sandwiching" 0.6 g of Tenax-TA between two 22-mm I.D. x 3.8-cm pre-cleaned PUF plugs, as shown in Figure 2, Cartridge b. The Tenax-TA should be pre-extracted as described in Section 9.2. This trap may be extracted, vacuum dried, and removed without unloading it.

9.5 Analyze at least one assembled cartridge from each batch as a laboratory blank before the batch is acceptable. A blank level of <10 ng/plug for single component compounds is considered to be acceptable. For multiple component mixtures (e.g., PCBs), the blank level should be <100 ng/plug.

9.6 After cleaning, cartridges are considered clean up to 30 days when stored in sealed containers. Certified clean cartridges do not need to be chilled when shipping to the field.

10. Sampling

[Note: After the sampling system has been assembled and calibrated as per Section 8, it can be used to collect air samples as described below. The prepared sample cartridges should be used within 30 days of certification and should be handled only with latex or precleaned cotton gloves.]

10.1 Carefully remove the clean sample cartridge from the aluminum foil wrapping (the foil is returned to jars for later use) and attached to the pump with flexible tubing. The sampling assembly is positioned with the intake downward or in horizontal position. Locate the sampler in an unobstructed area at least 30 meters from any obstacle to air flow. The PUF or PUF/XAD-2 cartridge intake is positioned 1 to 2 m above ground level. Cartridge height above ground is recorded on the Compendium Method TO-10A field test data sheet (FTDS), as illustrated in Figure 5.

10.2 After the PUF cartridge is correctly inserted and positioned, the power switch is turned on and the sampling begins. The elapsed time meter is activated and the start time is recorded. The pumps are checked during the sampling process and any abnormal conditions discovered are recorded on the FTDS. Ambient temperatures and barometric pressures are measured and recorded periodically during the sampling procedure on the FTDS.

10.3 At the end of the desired sampling period, the power is turned off, the PUF cartridge removed from the sampler and wrapped with the original aluminum foil and placed in a sealed, labeled container for transport, under blue ice (<4°C), back to the laboratory. At least one field blank is returned to the laboratory with each group of

samples. A field blank is treated exactly like a sample except that no air is drawn through the cartridge. Samples are stored at <4°C or below until analyzed in the laboratory. Extraction must occur within 7 days of sampling and analysis within 40 days of extraction. Refer to ASTM D4861-94 (1), Appendix X3 for storage stability for various common pesticides and other compounds on PUF or PUF/Tenax TA sandwich.

11. Sample Extraction Procedure

[Note: Sample extraction should be performed under a properly ventilated hood.]

11.1 Sample Extraction

11.1.1 All samples should be extracted within 1 week after collection. All samples should be stored at <4°C until extracted.

11.1.2 All glassware should be washed with a suitable detergent; rinsed with deionized water, acetone, and hexane; rinsed again with deionized water; and fired in an oven (500°C).

11.1.3 Prepare a spiking solution for determination of extraction efficiency. The spiking solution should contain one or more surrogate compounds that have chemical structures and properties similar to those of the analytes of interest. Octachloronaphthalene (OCN) and dibutylchlorendate have been used as surrogates for determination of organochlorine pesticides by GC with an ECD. Tetrachloro-m-xylene and decachlorobiphenyl can also be used together to insure recovery of early and late eluting compounds. For organophosphate pesticides, tributylphosphate or triphenylphosphate may be employed as surrogates. The surrogate solution should be prepared so that addition of 100 µL into the PUF plug results in an extract containing the surrogate compound at the high end of the instrument's calibration range. As an example, the spiking solution for OCN is prepared by dissolving 10 mg of OCN in 10 mL of 10% acetone in n-hexane, followed by serial dilution n-hexane to achieve a final spiking solution of OCN of 1 µg/mL.

[Note: Use the recoveries of the surrogate compounds to monitor for unusual matrix effects and gross sample processing errors. Evaluate surrogate recovery for acceptance by determining whether the measured concentration falls within the acceptance limits of 60-120 percent.]

11.1.4 The extracting solution (5% diethyl ether/hexane) is prepared by mixing 1900 mL of freshly opened hexane and 100 mL of freshly opened diethyl ether (preserved with ethanol) to a flask.

11.1.5 All clean glassware, forceps, and other equipment to be used should be rinsed with 5% diethyl ether/hexane and placed on rinsed (5% diethyl ether/hexane) aluminum foil until use. The condensing towers should also be rinsed with 5% diethyl ether/hexane. Then add 300 mL or 5% diethyl ether/hexane to the 500 mL round bottom boiling flask and add up to three boiling granules.

11.1.6 Using precleaned (i.e., 5% diethyl ether/hexane Soxhlet extracted) cotton gloves, the glass PUF cartridges are removed from the sealed container, the PUF removed from the glass container and is placed into the 300 mL Soxhlet extractor using prerinsed forceps.

[Note: If "sandwich" trap is used, carefully clean outside walls of cartridge with hexane-soaked cotton swabs or laboratory tissues (discard) and place cartridge into extractor with intake (large end) downward.]

11.1.7 Before extraction begins, add 100 µL of the OCN solution directly to the top of the PUF plug.

[Note: Incorporating a known concentration of the solution onto the sample provides a quality assurance check to determine recovery efficiency of the extraction and analytical processes.]

11.1.8 Connect the Soxhlet extractor to the 500 mL boiling flask and condenser. Wet the glass joints with 5% diethyl ether/hexane to ensure a tight seal between the fittings. If necessary, the PUF plug can be adjusted using forceps to wedge it midway along the length of the siphon. The above procedure should be followed for all samples, with the inclusion of a blank control sample.

11.1.9 The water flow to the condenser towers of the Soxhlet extraction assembly should be checked and the heating unit turned on. As the samples boil, the Soxhlet extractors should be inspected to ensure that they are filling and siphoning properly (4 to 6 cycles/hour). Samples should cycle for a minimum of 16 hours.

11.1.10 At the end of the extracting process (minimum of 16 hours), the heating unit is turned off and the sample cooled to room temperature.

11.1.11 The extracts are then concentrated to 5 mL using a Kuderna-Danish (K-D) apparatus. The K-D is set up, assembled with concentrator tubes, and rinsed. The lower end of the filter tube is packed with glass wool and filled with sodium sulfate to a depth of 40 mm. The filter tube is then placed in the neck of the K-D. The Soxhlet extractors and boiling flasks are carefully removed from the condenser towers and the remaining solvent is drained into each boiling flask. Sample extract is carefully poured through the filter tube into the K-D. Each boiling flask is rinsed three times by swirling hexane along the sides. Once the sample has drained, the filter tube is rinsed down with hexane. Each Synder column is attached to the K-D and rinsed to wet the joint for a tight seal. The complete K-D apparatus is placed on a steam bath and the sample is evaporated to approximately 5 mL.

[Note: Do not allow samples to evaporate to dryness.]

Remove sample from the steam bath, rinse Synder column with minimum of hexane, and allow to cool. Adjust sample volume to 10 mL in a concentrator tube, close with glass stopper and seal with TFE fluorocarbon tape. Alternatively, the sample may be quantitatively transferred (with concentrator tube rinsing) to prescored vials and brought up to final volume. Concentrated extracts are stored at <4°C until analyzed. Analysis should occur no later than 40 days after sample extraction.

11.2 Sample Cleanup

11.2.1 If polar compounds (from example, organophosphorus and carbamate classes) that interfere with GC/ECD analysis are present, use column chromatographic cleanup or alumina. The sample cleanup will permit the analysis of most organochlorine pesticides or PCBs.

11.2.2 Before cleanup, the sample extract is carefully reduced to 1 mL using a gentle stream of clean nitrogen.

11.2.3 A glass chromatographic column (2-mm I.D. x 15-cm long) is packed with alumina, activity grade IV, and rinsed with approximately 20 mL of n-hexane. The concentrated sample extract is placed on the column and eluted with 10 mL of n-hexane at a rate of 0.5 mL/minute. The eluate volume is adjusted to exactly 10 mL and analyzed as per Section 12.

11.2.4 If both PCBs and organochlorine pesticides are sought, alternate cleanup procedures (5,6) may be required (i.e., silicic acid).

11.2.5 Finally, class separation and improved specificity can be achieved by column clean-up and separation on Florisil (6).

12. Analytical Procedure

12.1 Analysis of Organochlorine Pesticides by Capillary Gas Chromatography with Electron Capture Detector (GC/ECD)

[Note: Organochlorine pesticides, PCBs and many nonchlorinated pesticides are responsive to electron capture detection (see Table 1). Most of these compounds can be analyzed at concentration of 1 to 50 ng/mL by GC/ECD. The following procedure is appropriate. Analytical methods that have been used to determine pesticides and PCBs collected from air by this procedure have been published (12).]

12.1.1 Select GC column (e.g., 0.3-mm by 30-m DB-5 column) and appropriate GC conditions to separate the target analytes. Typical operating parameters for this column with splitless injection are: Carrier gas-chromatography grade helium at a flow rate of 1 to 2 mL/min and a column head pressure of 7 to 9 psi (48 to 60 kPa); injector temperature of 250°C; detector temperature of 350°C; initial oven temperature of 50°C held for 2.0 min., ramped at 15°C/min to 150°C for 8 min, ramped at 10°C/min to 295°C then held for 5 min; purge time of 1.0 min. A typical injection volume is 2 to 3 μL.

12.1.2 Remove sample extract from the refrigerator and allow to warm to room temperature.

12.1.3 Prepare standard solution from reference materials of known purity. Analytically pure standards of organochlorine pesticides and PCBs are available from several commercial sources.

12.1.4 Use the standard solutions of the various compounds of interest to determine relative retention times (RRTs) to an internal standard such as p,p'-DDE, aldrin or octachloronaphthalene. Use 1 to 3-μL injections or other appropriate volumes.

12.1.5 Determine detector linearity by injecting standard solutions of three different concentrations (amounts) that bracket the range of analyses. The calibration is considered linear if the relative standard deviation (RSD) of the response factors for the three standards is 20 percent or less.

12.1.6 Calibrate the system with a minimum of three levels of calibration standards in the linear range. The low standard should be near the analytical method detection limit. The calibration is considered linear if the relative standard deviation (RSD) of the response factors for the three standards is 20 percent or less. The initial calibration should be verified by the analysis of a standard from an independent source. Recovery of 85 to 115 percent is acceptable. The initial calibration curve should be verified at the begining of each day and after every ten samples by the analysis of the mid point standard; an RPD of 15% or less is acceptable for continuing use of the initial calibration curve.

12.1.7 Inject 1 to 3 μL of the sample extract. Record volume injected to the nearest 0.05 μL.

12.1.8 A typical ECD response for a mixture of single component pesticides using a capillary column is illustrated in Figure 6. If the response (peak height or area) exceeds the calibration range, dilute the extract and reanalyze.

12.1.9 Quantify PCB mixtures by comparison of the total heights or areas of GC peaks (minimum of 5) with the corresponding peaks in the best-matching standard. Use Aroclor 1242 for early-eluting PCBs and either Aroclor 1254 or Aroclor 1260 as appropriate for late-eluting PCBs.

12.1.10 If both PCBs and organochlorine pesticides are present in the same sample, use column chromatographic separation on silicic acid (5,6) prior to GC analysis.

12.1.11 If polar compounds are present that interfere with GC/ECD analysis, use column chromatographic cleanup or alumina, activity grade IV, in accordance with Section 11.2.

12.1.12 For confirmation use a second GC column such as DB-608. All GC procedures except GC/MS require second column confirmation.

12.1.13 For improved resolution use a capillary column such as an 0.25-mm I.D. x 30-m DB-5 with 0.25 μm film thickness. The following conditions are appropriate.

- Helium carrier gas at 1 mL/min.
- Column temperature program, 90°C (4 min)/16°C/min to 154°C/4°C/min to 270°C.
- Detector, ^{63}Ni ECD at 350°C.
- Make up gas, nitrogen, or 5% methane/95% argon at 60 mL/min.
- Splitless injection, 2 μL maximum.
- Injector temperature, 220°C.

12.1.14 Class separation and improved specificity can be achieved by column chromatographic separation on Florisil (6).

12.2 Analysis of Organophosphorus Pesticides by Capillary Gas Chromatography with Flame Photometric or Nitrogen-Phosphorus Detectors (GC/FPD/NPD)

[Note: Organophosphorus pesticides are responsive to flame photometric and nitrogen-phosphorus (alkali flame ionization) detection. Most of these compounds can be analyzed at concentrations of 50 to 500 ng/mL using either of these detectors.]

12.2.1 Procedures given in Section 12.1.1 through 12.1.9 and Section 12.1.13 through 12.1.14 apply, except for the selection of surrogates.

12.2.2 Use tributylphosphate, triphenylphosphate, or other suitable compound(s) as surrogates to verify extraction efficiency and to determine RRTs.

12.3 Analysis of Carbamate and Urea Pesticides by Capillary Gas Chromatography with Nitrogen-Phosphorus Detector

12.3.1 Trazine, carbamate, and urea pesticides may be determined by capillary GC (DB-5, DB-17, or DB-1701 stationary phase) using nitrogen-phosphorus detection or MS-SIM with detection limits in the 0.05 to 0.2 μL/mL range. Procedures given in Section 12.1.1 through 12.1.9 and Section 12.1.13 through 12.1.14 apply, except for the selection of surrogates, detector, and make up gas.

12.3.2 Thermal degradation may be minimized by reducing the injector temperature to 200°C. HPLC may also be used, but detection limits will be higher (1 to 5 μg/mL).

12.3.3 N-methyl carbamates may be determined using reverse-phase high performance liquid chromatography (HPLC) (C-18) (Section 12.4) and post-column derivatization with o-phthaldehyde and fluorescence detection (EPA Method 531). Detection limits of 0.01 to 0.1 μg/mL can be achieved.

12.4 Analysis of Carbamate, Urea, Pyrethroid, and Phenolic Pesticides by High Performance Liquid Chromatography (HPLC)

[Note: Many carbamate pesticides, urea pesticides, pyrethrins, phenols, and other polar pesticides may be analyzed by high HPLC with fixed or variable wavelength UV detection. Either reversed-phase or normal phase chromatography may be used. Detection limits are 0.2 to 10 μg/mL of extract.]

12.4.1 Select HPLC column (i.e., Zorbax-SIL, 46-mm I.D. x 25-cm, or μ-Bondapak C18, 3.9-mm x 30-cm, or equivalent).

12.4.2 Select solvent system (i.e., mixtures of methanol or acetonitrile with water or mixtures of heptane or hexane with isopropanol).

12.4.3 Follow analytical procedures given in Sections 12.1.2 through 12.1.9.

12.4.4 If interferences are present, adjust the HPLC solvent system composition or use column chromatographic clean-up with silica gel, alumina, or Florisil (6).

12.4.5 An electrochemical detector may be used to improve sensitivity for some ureas, carbamates, and phenolics. Much more care is required in using this detector, particularly in removing dissolved oxygen from the mobile phase and sample extracts.

12.4.6 Chlorophenol (di- through penta-) may be analyzed by GC/ECD or GC/MS after derivatization with pentafluorobenzylbromide (EPA Method 604).

12.4.7 Chlorinated phenoxyacetic acid herbicides and pentachlorophenol can be analyzed by GC/ECD or GC/MS after derivatization with diazomethane (EPA Method 515). DB-5 and DB-1701 columns (0.25-mm I.D. x 30-m) at 60 to 300°C/4°C per min have been found to perform well.

12.5 Analysis of Pesticides and PCBs by Gas Chromatography with Mass Spectrometry Detection (GC/MS)

[Note: A mass spectrometer operating in the selected ion monitoring mode is useful for confirmation and identification of pesticides.]

12.5.1 A mass spectrometer operating in the select ion monitoring (SIM) mode can be used as a sensitive detector for multi-residue determination of a wide variety of pesticides. Mass spectrometers are now available that provide detection limits comparable to nitrogen-phosphorus and electron capture detectors.

12.5.2 Most of the pesticides shown in Table 1 have been successfully determined by GC/MS/SIM. Typical GC operating parameters are as described in Section 12.1.1.

12.5.3 The mass spectrometer is typically operated using positive ion electron impact ionization (70 eV). Other instrumental parameters are instrument specific.

12.5.4 p-Terphenyl-d_{14} is commonly used as a surrogate for GC/MS analysis.

12.5.5 Quantification is typically performed using an internal standard method. 1,4-Dichlorobenzene, naphthalene-d_8, acenaphthene-d_{10}, phenanthrene-d_{10}, chrysene-d_{12} and perylene-d_{12} are commonly used as internal standards. Procedures given in Section 12.1.1 through 12.1.9 and Section 12.1.13 through 12.1.14 apply, except for the selection of surrogates, detector, and make up gas.

12.5.6 See ASTM Practice D 3687 for injection technique, determination of relative retention times, and other procedures pertinent to GC and HPLC analyses.

12.6 Sample Concentration

12.6.1 If concentrations are too low to detect by the analytical procedure of choice, the extract may be concentrated to 1 mL or 0.5 mL by carefully controlled evaporation under an inert atmosphere. The following procedure is appropriate.

12.6.2 Place K-D concentrator tube in a water bath and analytical evaporator (nitrogen blow-down) apparatus. The water bath temperature should be from 25°C to 50°C.

12.6.3 Adjust nitrogen flow through hypodermic needle to provide a gentle stream.

12.6.4 Carefully lower hypodermic needle into the concentrator tube to a distance of about 1 cm above the liquid level.

12.6.5 Continue to adjust needle placement as liquid level decreases.

12.6.6 Reduce volume to slightly below desired level.

12.6.7 Adjust to final volume by carefully rinsing needle tip and concentrator tube well with solvent (usually n-hexane).

13. Calculations

13.1 Determination of Concentration

13.1.1 The concentration of the analyte in the extract solution can be taken from a standard curve where peak height or area is plotted linearly against concentration in nanograms per milliliter (ng/mL). If the detector response is known to be linear, a single point is used as a calculation constant.

13.1.2 From the standard curve, determine the nanograms of analyte standard equivalent to the peak height or area for a particular compound.

13.1.3 Ascertain whether the field blank is contaminated. Blank levels should not exceed 10 ng/sample for organochlorine pesticides or 100 ng/sample for PCBs and other pesticides. If the blank has been contaminated, the sampling series must be held suspect.

13.1.4 Quantity of the compound in the sample (A) is calculated using the following equation:

$$A = 1000\left(\frac{A_s \times V_e}{V_i}\right)$$

where:

A = total amount of analyte in the sample, ng.
A_s = calculated amount of material injected onto the chromatograph based on calibration curve for injected standards, ng.
V_e = final volume of extract, mL.
V_i = volume of extract injected, μL.
1000 = factor for converting microliters to milliliters.

13.1.5 The extraction efficiency (EE) is determined from the recovery of surrogate spike as follows:

$$EE(\%) = \left|\frac{S}{S_s}\right|[100]$$

where:

EE = extraction efficiency, %.
S = amount of spike recovered, ng.
S_s = amount of spike added to plug, ng.

The extraction efficiency (surrogate recovery) must fall between 60-120% to be acceptable.

13.1.6 The total volume of air sampled under ambient conditions is determined using the following equation:

$$V_a = \frac{\sum_{i=1}^{n} (T_i \times F_i)}{1000\ L/m^3}$$

where:

V_a = total volume of air sampled, m^3.
T_i = length of sampling segment between flow checks, min.
F_i = average flow during sampling segment, L/min.

13.1.7 The air volume is corrected to EPA standard temperature (25°C) and standard pressure (760 mm Hg) as follows:

$$V_s = V_a\left(\frac{P_b - P_w}{760\ mm\ Hg}\right)\left(\frac{298K}{t_A}\right)$$

where:

V_s = volume of air at standard conditions (25°C and 760 mm Hg), std. m^3.
V_a = total volume of air sampled, m^3.
P_b = average ambient barometric pressure, mm Hg.
P_w = vapor pressure of water at calibration temperature, mm Hg.
t_A = average ambient temperature, °C + 273.

13.1.8 If the proper criteria for a sample have been met, concentration of the compound in a standard cubic meter of air sampled is calculated as follows:

$$C_a(ng/std.\ m^3) = \left[\frac{(A)}{(V_s)}\right]\left[\frac{(100)}{(SE(\%))}\right]$$

where:

SE = sampling efficiency as determined by the procedure outlined in Section 14.

If it is desired to convert the air concentration value to parts per trillion (ppt) in dry air at standard temperature and pressure (STP), the following conversion is used:

$$ppt = 0.844\ (C_a)$$

The air concentration can be converted to parts per trillion (v/v) in air at STP as follows:

$$pptv = \left[\frac{(24.45)\ (C_a)}{(MW)}\right]$$

where:

MW = molecular weight of the compound of interest, g/g-mole.

13.1.9 If quantification is performed using an internal standard, a relative response factor (RRF) is calculated by the equation:

$$RRF = \left[\frac{(I_s)(C_{is})}{(I_{is})(C_s)}\right]$$

where:

I_s = integrated area of the target analyte peak, counts.
I_{is} = integrated area of the internal standard peak, counts.
C_{is} = concentration of the internal standard, ng/µL.
C_s = concentration of the analyte, ng/µL.

13.1.10 The concentration of the analyte (C_a) in the sample is then calculated as follows:

$$C_a = \frac{(I_s)(C_{is})}{(RRF)(I_{is})}$$

where:

C_a = concentration of analyte, ng/m³
I_s = integrated area of the target analyte peak, counts.
RRF = relative response factor (see Section 13.1.10).

14. Sampling and Retention Efficiencies

14.1 General

14.1.1 Before using Compendium Method TO-10A, the user should determine the sampling efficiency for the compound of interest. The sampling efficiencies shown in Tables 2, 3, 4, and 5 were determined for approximately 1 m³ of air at about 25°C, sampled at 3.8 L/min. The SE values in these tables may be used for similar sampling conditions; for other compounds or conditions, SE values must be determined.

14.1.2 Sampling efficiencies for the pesticides shown in Table 6 are for a flowrate of 3.8 L/min and at 25°C. For compounds not listed, longer sampling times, different flow rates, or other air temperatures, the following procedure may be used to determine sampling efficiencies.

14.2 Determining SE

14.2.1 SE is determined by a modified impinger assembly attached to the sampler pump, as illustrated in Figure 7. A clean PUF is placed in the pre-filter location and the inlet is attached to a nitrogen line.

[Note: Nitrogen should be used instead of air to prevent oxidation of the compounds under test. The oxidation would not necessarily reflect what may be encountered during actual sampling and may give misleading sampling efficiencies.]

Two PUF plugs (22-mm x 7.6-cm) are placed in the primary and secondary traps and are attached to the pump.

14.2.2 A standard solution of the compound of interest is prepared in a volatile solvent (i.e., hexane, pentane, or benzene). A small, accurately measured volume (i.e., 1 mL) of the standard solution is placed into the modified midget impinger. The sampler pump is set at the rate to be used in field application and then activated. Nitrogen is drawn through the assembly for a period of time equal to or exceeding that intended for field application. After the desired sampling test period, the PUF plugs are removed and analyzed separately as per Section 12.

14.2.3 The impinger is rinsed with hexane or another suitable solvent and quantitatively transferred to a volumetric flask or concentrator tube for analysis.

14.2.4 The sampling efficiency (SE) is determined using the following equation:

$$\% \ SE = \frac{W_1}{W_0 - W_r} \times 100$$

where:

W_1 = amount of compound extracted from the primary trap, ng.
W_o = original amount of compound added to the impinger, ng.
W_r = residue left in the impinger at the end of the test, ng.

14.2.5 If material is found in the secondary trap, it is an indication that breakthrough has occurred. The addition of the amount found in the secondary trap, W_2, to W_1, will provide an indication for the overall sampling efficiency of a tandem-trap sampling system. The sum of W_1, W_2 (if any), and W_r must equal (approximately ±10%) W_o or the test is invalid.

14.2.6 If the compound of interest is not sufficiently volatile to vaporize at room temperature, the impinger may be heated in a water bath or other suitable heater to a maximum of 50°C to aid volatilization. If the compound of interest cannot be vaporized at 50°C without thermal degradation, dynamic retention efficiency (RE_d) may be used to estimate sampling efficiency. Dynamic retention efficiency is determined in the manner described in Section 14.2.7. Table 7 lists those organochlorine pesticides which dynamic retention efficiencies have been determined.

14.2.7 A pair of PUF plugs is spiked by slow, dropwise addition of the standard solution to one end of each plug. No more than 0.5 to 1 mL of solution should be used. Amounts added to each plug should be as nearly the same as possible. The plugs are allowed to dry for 2 hours in a clean, protected place (i.e., desiccator). One spiked plug is placed in the primary trap so that the spiked end is at the intake and one clean unspiked plug is placed in the secondary trap. The other spiked plug is wrapped in hexane-rinsed aluminum foil and stored in a clean place for the duration of the test (this is the static control plug, Section 14.2.8). Prefiltered nitrogen or ambient air is drawn through the assembly as per Section 14.2.2.
[Note: Impinger may be discarded.]

Each PUF plug (spiked and static control) is analyzed separately as per Section 12.

14.2.8 This dynamic retention efficiency (% RE_d) is calculated as follows:

$$\% \ RE_d = \frac{W_1}{W_o} \times 100$$

where:

W_1 = amount of compound recovered from primary plug, ng.

W_o = amount of compound added to primary plug, ng.

If a residue, W_2, is found on the secondary plug, breakthrough has occurred. The sum of $W_1 + W_2$ must equal W_o within 25% or the test is invalid. For most compounds tested by this procedure, % RE_d values are generally less than % SE values determined per Section 14.2. The purpose of the static RE_d determination is to establish any loss or gain of analyte unrelated to the flow of nitrogen or air through the PUF plug.

15. Performance Criteria and Quality Assurance

[Note: This section summarizes required quality assurance (QA) measures and provides guidance concerning performance criteria that should be achieved within each laboratory.]

15.1 Standard Operating Procedures (SOPs)

15.1.1 Users should generate SOPs describing the following activities accomplished in their laboratory: (1) assembly, calibration, and operation of the sampling system, with make and model of equipment used; (2) preparation, purification, storage, and handling of sampling cartridges; (3) assembly, calibration, and operation of the analytical system, with make and model of equipment used; and (4) all aspects of data recording and processing, including lists of computer hardware and software used.

15.1.2 SOPs should provide specific stepwise instructions and should be readily available to, and understood by, the laboratory personnel conducting the work.

15.2 Process, Field, and Solvent Blanks

15.2.1 One PUF cartridge from each batch of approximately twenty should be analyzed, without shipment to the field, for the compounds of interest to serve as a process blank.

15.2.2 During each sampling episode, at least one PUF cartridge should be shipped to the field and returned, without drawing air through the sampler, to serve as a field blank.

15.2.3 Before each sampling episode, one PUF plug from each batch of approximately twenty should be spiked with a known amount of the standard solution. The spiked plug will remain in a sealed container and will not be used during the sampling period. The spiked plug is extracted and analyzed with the other samples. This field spike acts as a quality assurance check to determine matrix spike recoveries and to indicate sample degradation.

15.2.4 During the analysis of each batch of samples, at least one solvent process blank (all steps conducted but no PUF cartridge included) should be carried through the procedure and analyzed.

15.2.5 All blank levels should not exceed 10 ng/sample for single components or 100 ng/sample for multiple component mixtures (i.e., for organochlorine pesticides and PCBs).

15.3 Sampling Efficiency and Spike Recovery

15.3.1 Before using the method for sample analysis, each laboratory must determine its sampling efficiency for the component of interest as per Section 14.

15.3.2 The PUF in the sampler is replaced with a hexane-extracted PUF. The PUF is spiked with a microgram level of compounds of interest by dropwise addition of hexane solutions of the compounds. The solvent is allowed to evaporate.

15.3.3 The sampling system is activated and set at the desired sampling flow rate. The sample flow is monitored for 24 hours.

15.3.4 The PUF cartridge is then removed and analyzed as per Section 12.

15.3.5 A second sampler, unspiked, is collected over the same time period to account for any background levels of components in the ambient air matrix.

15.3.6 In general, analytical recoveries and collection efficiencies of 75% are considered to be acceptable method performance.

15.3.7 Replicate (at least triplicate) determinations of collection efficiency should be made. Relative standard deviations for these replicate determinations of ±15% or less are considered acceptable performance.

15.3.8 Blind spiked samples should be included with sample sets periodically as a check on analytical performance.

15.4 Method Precision and Bias

15.4.1 Precision and bias in this type of analytical procedure are dependent upon the precision and bias of the analytical procedure for each compound of concern, and the precision and bias of the sampling process.

15.4.2 Several different parameters involved in both the sampling and analysis steps of this method collectively determine the precision and bias with which each compound is detected. As the volume of air sampled is increased, the sensitivity of detection increases proportionately within limits set by: (a) the retention efficiency for each specific component trapped on the polyurethane foam plug, and (b) the background interference associated with the analysis of each specific component at a given site sampled. The sensitivity of detection of samples recovered by extraction depends on: (a) the inherent response of the particular GC detector used in the determinative step, and (b) the extent to which the sample is concentrated for analysis. It is the responsibility of the analyst(s) performing the sampling and analysis steps to adjust parameters so that the required detection limits can be obtained.

15.4.3 The reproducibility of this method for most compounds for which it has been evaluated has been determined to range from ±5 to ±30% (measured as the relative standard deviation) when replicate sampling cartridges are used (N>5). Sample recoveries for individual compounds generally fall within the range of 90 to 110%, but recoveries ranging from 65 to 125% are considered acceptable. PUF alone may give lower recoveries for more volatile compounds (i.e., those with saturation vapor pressures $>10^{-3}$ mm Hg). In those cases, another sorbent or a combination of PUF and Tenax TA (see Figure 2) should be employed.

15.5 Method Safety

15.5.1 This procedure may involve hazardous materials, operations, and equipment. This method does not purport to address all of the safety problems associated with its use.

15.5.2 It is the user's responsibility to consult and establish appropriate safety and health practices and determine the applicability of regulatory limitations prior to the implementation of this procedure. This should be part of the user's SOP manual.

16. References

1. "Standard Practice for Sampling and Analysis of Pesticides and Polychlorinated Biphenyls in Air," *Annual Book of ASTM Standards*, Method D4861-94, ASTM, Philadelphia, PA.

2. Lewis, R., and MacLeod, K., "Portable Sampler for Pesticides and Semi-volatile Industrial Organic Chemicals in Air," *Analytical Chemistry*, Vol. 54, 1982, pp. 310-315.

3. Whitmore R.W., Immerman, F.W., Camann, D.E., Bond, A.E., Lewis, R.G., and Schaum, J.L., "Non-occupational Exposure to Pesticides for Residents of Two U.S. Cities," *Arch. Environ. Contam. Toxicol.*, 26, 47-59 (1994).

4. Lewis, R., and Brown, A., and Jackson, M., "Evaluation of Polyurethane Foam for Sampling of Pesticides, Polychlorinated Biphenyls and Polychlorinated Napththalenes in Ambient Air," *Analytical Chemistry*, Vol. 49, 1977, pp. 1668-1672.

5. Armour, J., and Burke, J., "Method for Separating Polychlorinated Biphenyls from DDT and Its Analogs," *Journal of the Association of Official Analytical Chemists*, Vol. 53, No. 4, 1970, pp. 761-768.

6. *Manual of Analytical Methods for the Analysis of Pesticides in Human and Environmental Samples*, U. S. Environmental Protection Agency, Research Triangle Park, NC 27711, Report No. EPA-600/8-80-038, June 1980 (NTIS No. PB82-208752).

7. Kogan, V., Kuhlman, M., Coutant, R., and Lewis, R., "Aerosol Filtration in Sorbent Beds," *Journal of the Air and Waste Management Association*, Vol. 43, 1993, p. 1367-1373.

8. Lewis, R., and Lee, R., "Air Pollution from Pesticide Sources, Occurrences and Dispersion," In: *Air Pollution from Pesticides and Agricultural Processes*, Lee, R., Editor, CRC Press, Boca Raton, FL, 1976, pp. 51-94.

9. Lewis, R., "Problem Associated with Sampling for Semi-volatile Organic Chemicals in Air," *Proceedings of the 1986 EPA/APCA Symposium on Measurement of Toxic Air Pollutants*, Air and Waste Management Association, Pittsburgh, PA, 1986, pp. 134-145.

10. Camann, D., Harding, J., and Lewis, R., "Trapping of Particle-Associated Pesticides in Indoor Air by Polyurethane Foam and Evaporation of Soil Track-In as a Pesticide Source," In: *Indoor Air* '90, Vol. 2, Walkinshaw, D., editor, Canada Mortgage and Housing Corp., Ottawa, 1990, pp. 621-626.

11. Marple, V., Rubow, K., Turner, W., and Spengler, J., "Low Flow Rate Sharp Cut Impactors for Indoor Air Sampling Design and Calibration," *Journal of the Air Pollution Control Association*. Vol. 37, 1987, pp. 1303-1307.

12. Hsu, J., Wheeler, H., Camann, D., Shatterberg, H., Lewis, R., and Bond, A., "Analytical Methods for Detection of Nonoccupational Exposure to Pesticides," *Journal of Chromatographic Science*, Vol. 26, 1988, pp. 181-189.

TABLE 1. COMPOUNDS FOR WHICH PROCEDURE HAS BEEN TESTED[1]

Compound	Recommended Analysis[2]	Compound	Recommended Analyses
Alachlor	GC/ECD	Heptachlor	GC/ECD
Aldrin	GC/ECD	Heptachlor epoxide	GC/ECD
Allethrin	HPLC/UV	Hexachlorobenzene	GC/ECD
Aroclor 1242	GC/ECD	Hexachlorocyclopentadiene[3,4]	GC/ECD
Aroclor 1254	GC/ECD	Lindane (γ-BHC)	GC/ECD
Aroclor 1260	GC/ECD	Linuron	HPLC/UV
Atrazine	GC/NPD	Malathion	GC/NPD or FPD
Bendiocarb	HPLC/UV	Methyl parathion	GC/NPD or FPD
BHC (α- and β-Hexachlorocyclohexanes)	GC/ECD	Methoxychlor	GC/ECD
Captan	GC/ECD	Metolachlor	GC/ECD
Carbaryl	HPLC/UV	Mexacarbate	GC/ECD
Carbofuran	HPLC/UV	Mirex	GC/ECD
Chlordane, technical	GC/ECD	Monuron	HPLC/UV
Chlorothalonil	GC/ECD	Trans-nonachlor	GC/ECD
Chlorotoluron	HPLC/UV	Oxychlordane	GC/ECD
Chlorpyritos	GC/ECD	Pentachlorobenzene	GC/ECD
2,4-D esters and salts	GC/ECD	Pentachlophenol	GC/ECD
Dacthal	GC/ECD	Permethrin (cis and trans)	HPLC/UV
p,p-'DDT	GC/ECD	o-Phenylphenol	HPLC/UV
p,p-'DDE	GC/ECD	Phorate	GC/NPD or FPD
Diazinon	GC/NPD or FPD	Propazine	GC/NPD
Dicloran	GC/ECD	Propoxur (Baygon)	HPLC/UV
Dieldrin	GC/ECD	Pyrethrin	HPLC/UV
Dichlorovos (DDVP)	GC/ECD	Resmethrin	HPLC/UV
Dicofol	GC/ECD	Ronnel	GC/ECD
Dicrotophos	HPLC/UV	Simazine	HPLC/UV
Diuron	HPLC/UV	Terbuthiuron	HPLC/UV
Ethyl parathion	GC/NPD or FPD	1,2,3,4-tetrachlorobenzene[3]	GC/ECD
Fenvalerate	HPLC/UV	1,2,3-trichlorobenzene[3]	GC/ECD
Fluometuron	HPLC/UV	2,3,5-trichlorophenol	GC/ECD
Folpet	GC/ECD	Trifluralin	GC/ECD

[1]The following recommendations are specific for that analyte for maximum sensitivity.
[2]GC = gas chromatography; ECD = electron capture detector; FPD = flame photometric detector; HPLC = high performance liquid chromatography; NPD = nitrogen-phosphorus detector; UV = ultraviolet absorption detector, (GC/MS (gas chromatography/mass spectrometry) may also be used).
[3]Using PUF/Tenax-TA "sandwich" trap.
[4]Compound is very unstable in solution.

TABLE 2. SAMPLING EFFICIENCIES FOR SOME ORGANOCHLORINE PESTICIDES

Compound	Quantity Introduced, μg[2]	Air Volume, m³	Sampling efficiency, %		
			mean	RSD	n
α-Hexachlorocyclohexane (α-BHC)	0.005	0.9	115	8	6
γ-Hexachlorocyclohexane (Lindane)	0.05-1.0	0.9	91.5	8	5
Chlordane, technical	0.2	0.9	84.0	11	8
p,p'-DDT	0.6, 1.2	0.9	97.5	21	12
p,p'-DDE	0.2, 0.4	0.9	102	11	12
Mirex	0.6, 1.2	0.9	85.9	22	7
2,4-D Esters:					
Isopropyl	0.5	3.6	92.0	5	12
Butyl	0.5	3.6	82.0	10	11
Isobutyl	0.5	3.6	79.0	20	12
Isoctyl	0.5	3.6	>80[2]	--	--

[1]Air volume = 0.9 m³.
[2]Not vaporized. Value base on %RE = 81.0 (RSD = 10%, n = 6).

TABLE 3. SAMPLING EFFICIENCIES FOR ORGANOPHOSPHORUS PESTICIDES

Compound	Quantity Introduced, μg[2]	Sampling efficiency, %		
		mean	RSD	n
Dichlorvos (DDVP)	0.2	72.0	13	2
Ronnel	0.2	106	8	12
Chlorpyrifos	0.2	108	9	12
Diazinon[1]	1.0	84.0	18	18
Methyl parathion[1]	0.6	80.0	19	18
Ethyl parathion[1]	0.3	75.9	15	18
Malathion[1]	0.3	100[3]	--	--

[1]Analyzed by gas chromatography with nitrogen phosphorus detector or flame photometric detector.
[2]Air volume = 0.9 m³.
[3]Decomposed in generator; value based on %RE = 101 (RDS = 7, n = 4).

TABLE 4. SAMPLING EFFICIENCIES FOR SOME SEMI-VOLATILE ORGANOCHLORINE COMPOUNDS AND PCBs

Compound	Quantity Introduced, μg[1]	Sampling efficiency, %		
		mean	RSD	n
1,2,3-Trichlorobenzene	1.0	6.6[2]	22	8
1,2,3,4-Tetrachlorobenzene	1.0	62.3[2]	33	5
Pentachlorobenzene	1.0	94.0	12	5
Hexachlorobenzene	0.5, 1.0	94.5	8	5
Hexachlorocyclopentadiene	1.0	8.3[2]	12	5
2,4,5-Trichlorophenol	1.0	108	3	5
Pentachlorophenol	1.0	107	16	5
Aroclor 1242	0.1	96.0	15	6
Aroclor 1254	0.1	95.0	7	6
Aroclor 1260	0.1	109	5	11

[1]Air volume = 0.9 m³.
[2]% SEs were 98, and 97% (n = 2), respectively, for these three compounds by the PUF/Tenax® TA "sandwich" trap.

TABLE 5. SAMPLING EFFICIENCIES FOR CARBAMATES, UREAS, TRIAZINES, AND PYRETHRINS

Compound	Spike Level, µg/plug	Static Recovery, %			Retention Efficiency, %			Sampling Efficiency, %		
		mean	RSDP	n	mean	RSD	n	mean	RSD	n
Carbamates:										
Propoxur	5	61.4	10	6	77.6	37	6	96.7	11	6
Carbofuran	15	55.3	12	6	64.2	46	6	87.2	14	6
Bendicarb	50	57.3	11	6	69.8	43	6	62.1	14	6
Mexacarbate	10	62.8	19	6	62.7	41	6	89.8	14	6
Carbaryl	100	56.6	14	6	63.6	53	6	0	13	6
Ureas:										
Monuron	19	87.0	6	6	91.2	6	5	0		
Diuron	20	84.1	8	6	90.0	2	5	0		
Linuron	20	86.7	8	6	92.5	4	5	0		
Terbuthiuron	18	85.0	8	6	88.8	8	5	0		
Fluometuron	20	91.4	10	6	101	3	5	0		
Chlortoluron	20	86.2	11	6	92.0	7	5	0		
Triazines:										
Simazine	10	103	6	5	101	9	6	0		
Atrazine	10	104	7	5	98.9	7	6	0		
Propazine	10	105	11	5	99.9	14	6	0		
Pyrethrins:										
Pyrethrin I	(9.7)	90.5	10	6	95.6	22	5	0		
Pyrethrin II	(6.1)	88.6	11	6	69.9	29	5	0		
Allethrin	25	69.2	9	5	58.3	12	6	0		
d-trans-Allethrin	25	76.8	9	6	74.4	9	5	0		
Dicrotophos	25	72.0	22	6	71.7	8	5	0		
Resmethrin	25	76.5	14	6	66.7	14	6	0		
Fenvalerate	25	87.9	3	6	57.2	20	3	0		

TABLE 6. EXTRACTION AND 24-H SAMPLING EFFICIENCIES FOR VARIOUS PESTICIDES AND RELATED COMPOUNDS

Compound	Extraction Efficiency[1], %		Sampling Efficiency, %, at 10 ng/m³		Sampling Efficiency, %, at 100 ng/m³		Sampling Efficiency, %, at 1,000 ng/m³	
	mean	RSD	mean	RSD	mean	RSD	mean	RSD
Chlropyrifos	83.3	11.5	83.7	18.0	92.7	15.1	83.7	18.0
Pentachlorophenol	84.0	22.6	66.7	42.2	52.3	36.2	66.7	42.2
Chlordane	95.0	7.1	96.0	1.4	74.0	8.5	96.0	1.4
o-Phenylphenol	47.0	46.7	46.0	19.1	45.3	29.9	46.0	19.1
Lindane	96.0	6.9	91.7	11.6	93.0	2.6	91.7	11.6
DDVP	88.3	20.2	51.0	53.7	106.0	1.4	51.0	53.7
2,4-D Methyl Ester	–	–	75.3	6.8	58.0	23.6	75.3	6.8
Heptachlor	99.0	1.7	97.3	13.6	103.0	17.3	97.3	13.6
Aldrin	97.7	4.0	90.7	5.5	94.0	2.6	90.7	5.5
Dieldrin	95.0	7.0	82.7	7.6	85.0	11.5	82.7	7.6
Ronnel	80.3	19.5	74.7	12.1	60.7	15.5	74.7	12.2
Diazinon	72.0	21.8	63.7	18.9	41.3	26.6	63.7	19.9
trans-Nonachlor	97.7	4.0	96.7	4.2	101.7	15.3	96.7	4.2
Oxychlordane	100.0	0.0	95.3	9.5	94.3	1.2	95.3	9.5
α-BHC	98.0	3.5	86.7	13.7	97.0	18.2	86.7	13.7
Bendiocarb	81.3	8.4	59.7	16.9	30.7	23.5	59.7	16.9
Chlorothalonil	90.3	8.4	76.7	6.1	70.3	6.5	76.7	6.1
Heptachlor Epoxide	100.0	0.0	95.3	5.5	97.7	14.2	95.3	5.5
Dacthal	–	–	87.0	9.5	95.3	22.2	87.0	9.5
Aroclor 1242	91.7	14.4	95.0	15.5	94.7	17.5	95.0	15.5

[1]Mean values for one spike at 550 ng/plug and two spikes at 5,500 ng/plug.
[2]Mean values for three determinations.

TABLE 7. EXTRACTION AND 24-H DYNAMIC RETENTION EFFICIENCIES FOR VARIOUS PESTICIDES AND RELATED COMPOUNDS

Compound	Extraction Efficiency[1], %		Sampling Efficiency[2], %, at					
			10 ng/m³		100 ng/m³		1,000 ng/m³	
	mean	RSD	mean	RSD	mean	RSD	mean	RSD
Propoxur	77.5	71.4	92.0	--	91.7	22.8	101.0	18.4
Resmethrin	95.5	71.4	79.0	--	100.7	13.1	107.0	4.4
Dicofol	57.0	8.5	38.0	25.9	65.0	8.7	69.0	--
Captan	73.0	12.7	56.0	--	45.5	64.3	84.3	16.3
Carbaryl	74.0	82.0	102.0	--	61.0	--	113.0	6.1
Malathion	76.5	44.5	108.0	--	54.0	16.0	77.3	7.6
cis-Permethrin	88.7	10.3	101.0	28.5	85.0	26.9	89.0	11.3
trans-Permethrin	88.7	11.0	67.3	34.8	80.7	56.4	108.3	9.5
Methoxychlor	65.5	4.9	--	--	--	--	78.5	2.1
Atrazine	75.0	50.5	--	--	73.0	30.1	83.0	9.5
Folpet	86.7	11.7	--	--	78.0	--	93.0	--
Aroclor 1260	92.0	14.5	88.0	9.6	85.3	9.9	107.1	13.6

[1]Mean values for one spike at 550 ng/plug and two spikes at 5,500 ng/plug.
[2]Mean values for three determinations.

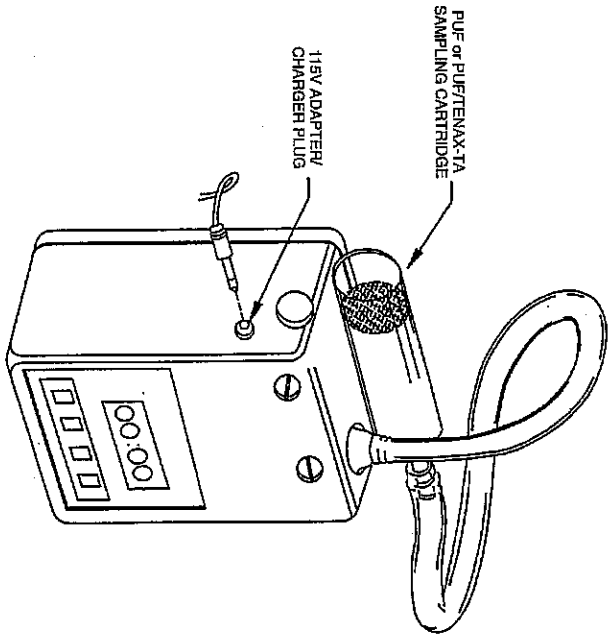

Figure 1. Low volume air sampler.

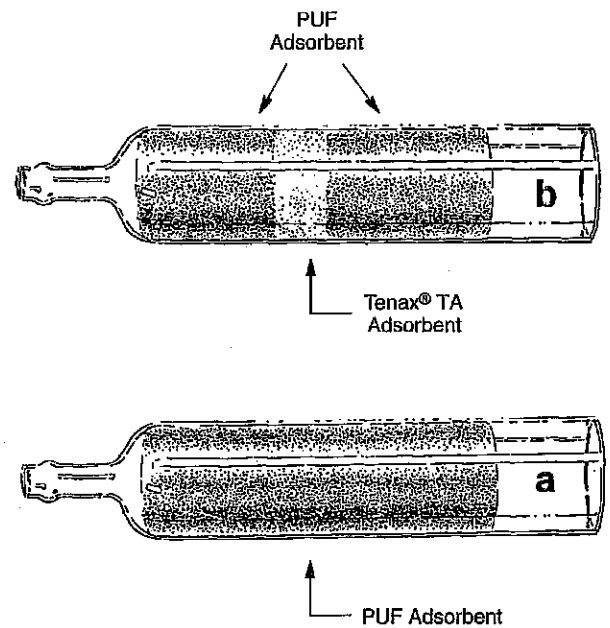

Figure 2. Polyurethane foam (PUF) sampling cartridge (a) and PUF-Tenax® TA "sandwich" sampling cartridge (b).

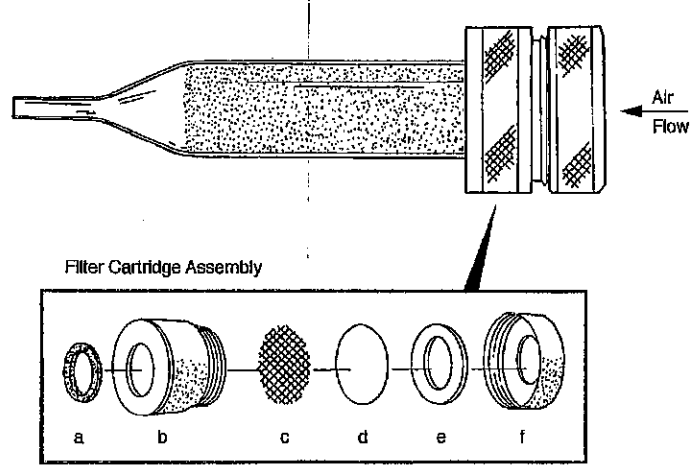

Figure 3. Open-face filter assembly attached to a PUF cartridge:
(a) Inner Viton® o-ring, (b) filter cartridge, (c) stainless steel screen, (d) quartz filter, (e) filter ring, and (f) cartridge screw cap.

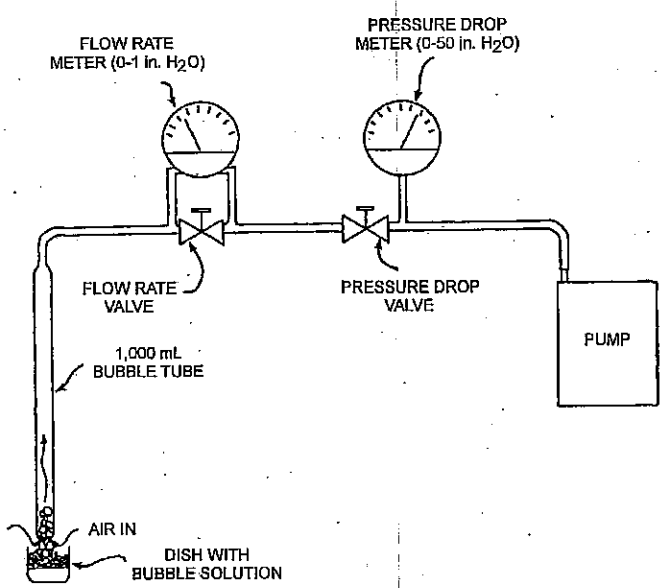

Figure 4. Calibration assembly for air sampler pump.

COMPENDIUM METHOD TO-10A
FIELD TEST DATA SHEET (FTDS)

I. GENERAL INFORMATION

PROJECT:_____ DATE(S) SAMPLED:_____
SITE:_____ TIME PERIOD SAMPLED:_____
LOCATION:_____ OPERATOR:_____
INSTRUMENT MODEL NO.:_____ CALIBRATED BY:_____
PUMP SERIAL NO.:_____ RAIN: ____YES ____NO

ADSORBENT CARTRIDGE INFORMATION:

	Cartridge 1	Cartridge 2	Cartridge 3	Cartridge 4
Type:				
Adsorbent:				
Serial No.:				
Sample No.:				

II. SAMPLING DATA

Cartridge Identification	Sampling Location	Ambient Temp., °F	Ambient Pressure, in Hg	Flow Rate (Q), mL/min		Sampling Period		Total Sampling Time, min.	Total Sample Volume, L
				Cartridge 1	Cartridge 2	Start	Stop		

III. FIELD AUDIT

	Cartridge 1	Cartridge 2	Cartridge 3	Cartridge 4
Audit Flow Check Within 10% of Set Point (Y/N)?	___ pre- ___ post-	___ pre- ___ post-	___ pre- ___ post-	___ pre- ___ post-

CHECKED BY:_____

DATE:_____

Figure 5. Compendium Method TO-10A field test data sheet.

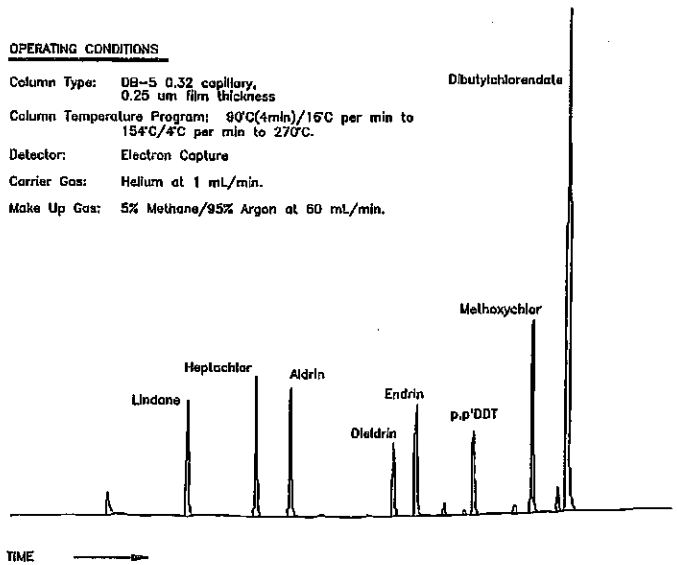

Figure 6. Chromatogram showing a mixture of single component pesticides determined by GC/ECD using a capillary column.

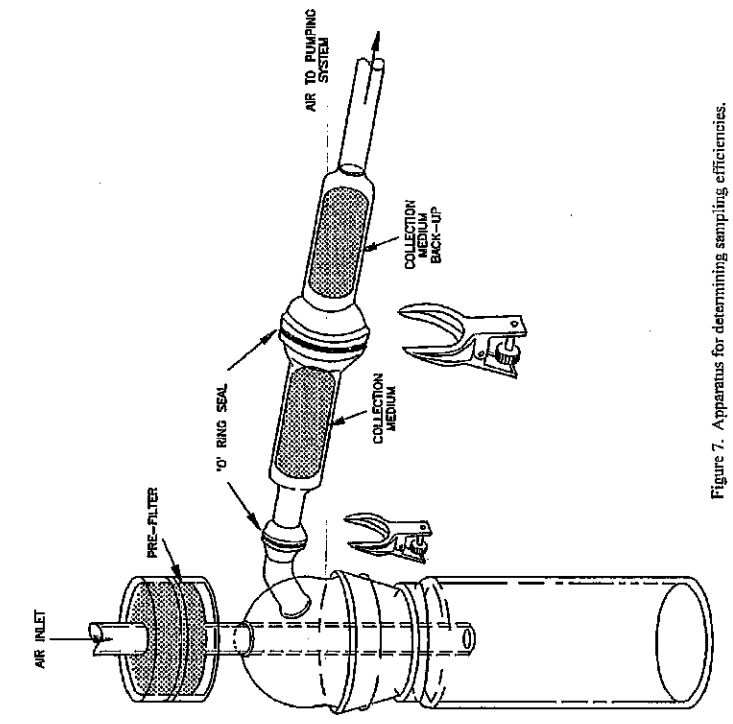

Figure 7. Apparatus for determining sampling efficiencies.

EPA/625/R-96/010b

Compendium of Methods for the Determination of Toxic Organic Compounds in Ambient Air

Second Edition

Compendium Method TO-13A

Determination of Polycyclic Aromatic Hydrocarbons (PAHs) in Ambient Air Using Gas Chromatography/Mass Spectrometry (GC/MS)

Center for Environmental Research Information
Office of Research and Development
U.S. Environmental Protection Agency
Cincinnati, OH 45268

January 1999

Method TO-13A
Acknowledgements

This Method was prepared for publication in the *Compendium of Methods for the Determination of Toxic Organic Compounds in Ambient Air, Second Edition* (EPA/625/R-96/010b), under Contract No. 68-C3-0315, WA No. 3-10, by Midwest Research Institute (MRI), as a subcontractor to Eastern Research Group, Inc. (ERG), and under the sponsorship of the U.S. Environmental Protection Agency (EPA). Justice A. Manning, John O. Burckle, and Scott R. Hedges, Center for Environmental Research Information (CERI), and Frank F. McElroy, National Exposure Research Laboratory (NERL), all in the EPA Office of Research and Development (ORD), were responsible for overseeing the preparation of this method. Additional support was provided by other members of the Compendia Workgroup, which include:

- John O. Burckle, U.S. EPA, ORD, Cincinnati, OH
- James L. Cheney, Corps of Engineers, Omaha, NB
- Michael Davis, U.S. EPA, Region 7, KC, KS
- Joseph B. Elkins Jr., U.S. EPA, OAQPS, RTP, NC
- Robert G. Lewis, U.S. EPA, NERL, RTP, NC
- Justice A. Manning, U.S. EPA, ORD, Cincinnati, OH
- William A. McClenny, U.S. EPA, NERL, RTP, NC
- Frank F. McElroy, U.S. EPA, NERL, RTP, NC
- Heidi Schultz, ERG, Lexington, MA
- William T. "Jerry" Winberry, Jr., EnviroTech Solutions, Cary, NC

Method TO-13 was originally published in March of 1989 as one of a series of peer-reviewed methods in the second supplement to *Compendium of Methods for the Determination of Toxic Organic Compounds in Ambient Air*, EPA 600/4-89-018. In an effort to keep these methods consistent with current technology, Method TO-13 has been revised and updated as Method TO-13A in this Compendium to incorporate new or improved sampling and analytical technologies.

This method is the result of the efforts of many individuals. Gratitude goes to each person involved in the preparation and review of this methodology.

Author(s)
- William T. "Jerry" Winberry, Jr., EnviroTech Solutions, Cary, NC
- Greg Jungclaus, Midwest Research Institute, Kansas City, MO

Peer Reviewers
- Nancy Wilson, U.S. EPA, NERL, RTP, NC
- Joan Bursey, ERG, Morrisville, NC
- Irene D. DeGraff, Supelco, Bellefonte, PA
- Jane Chuang, Battelle Laboratories, Cincinnati, OH
- Robert G. Lewis, U.S. EPA, NERL, RTP, NC
- Lauren Drees, U.S. EPA, NRMRL, Cincinnati, OH

Finally, recognition is given to Frances Beyer, Lynn Kaufman, Debbie Bond, Cathy Whitaker, and Kathy Johnson of Midwest Research Institute's Administrative Services staff whose dedication and persistence during the development of this manuscript has enabled its production.

DISCLAIMER

This Compendium has been subjected to the Agency's peer and administrative review, and it has been approved for publication as an EPA document. Mention of trade names or commercial products does not constitute endorsement or recommendation for use.

This page intentionally left blank

METHOD TO-13A

Determination of Polycyclic Aromatic Hydrocarbons (PAHs) in Ambient Air Using Gas Chromatography/Mass Spectrometry (GC/MS)

TABLE OF CONTENTS

	Page
1. Scope	13A-1
2. Summary of Method	13A-2
3. Significance	13A-3
4. Applicable Documents	13A-3
4.1 ASTM Standards	13A-3
4.2 EPA Documents	13A-3
4.3 Other Documents	13A-4
5. Definitions	13A-4
6. Limitations and Interferences	13A-5
6.1 Limitations	13A-5
6.2 Interferences	13A-6
7. Safety	13A-6
8. Apparatus	13A-7
8.1 Sampling	13A-7
8.2 Sample Clean-Up and Concentration	13A-8
8.3 Sample Analysis	13A-9
9. Equipment and Materials	13A-10
9.1 Materials for Sample Collection	13A-10
9.2 Sample Clean-up and Concentration	13A-11
9.3 GC/MS Sample Analysis	13A-11
10. Preparation of PUF Sampling Cartridge	13A-12
10.1 Summary of Method	13A-12
10.2 Preparation of Sampling Cartridge	13A-12
10.3 Procedure for Certification of PUF Cartridge Assembly	13A-13
10.4 Deployment of Cartridges for Field Sampling	13A-14
11. Assembly, Calibration, and Collection Using Sampling System	13A-15
11.1 Sampling Apparatus	13A-15
11.2 Calibration of Sampling System	13A-15
11.3 Sample Collection	13A-22

TABLE OF CONTENTS, CONTINUED

	Page
12. Sample Extraction, Concentration, and Cleanup	13A-23
12.1 Sample Identification	13A-23
12.2 Soxhlet Extraction and Concentration	13A-24
12.3 Sample Cleanup	13A-25
13. Gas Chromatography with Mass Spectrometry Detection	13A-26
13.1 General	13A-26
13.2 Calibration of GC/MS/DS	13A-26
13.3 GC/MS Instrument Operating Conditions	13A-29
13.4 Sample Analysis by GC/MS	13A-37
14. Quality Assurance/Quality Control (QA/QC)	13A-41
14.1 General System QA/QC	13A-41
14.2 Process, Field, and Solvent Blanks	13A-42
15. References	13A-42

METHOD TO-13A

Determination of Polycyclic Aromatic Hydrocarbons (PAHs) in Ambient Air Using Gas Chromatography/Mass Spectrometry (GC/MS)

1. Scope

1.1 Polycyclic aromatic hydrocarbons (PAHs) have received increased attention in recent years in air pollution studies because some of these compounds are highly carcinogenic or mutagenic. In particular, benzo[a]pyrene (B[a]P) has been identified as being highly carcinogenic. To understand the extent of human exposure to B[a]P and other PAHs, reliable sampling and analytical methods are necessary. This document describes a sampling and analysis procedure for common PAHs involving the use of a combination of quartz filter and sorbent cartridge with subsequent analysis by gas chromatography with mass spectrometry (GC/MS) detection. The analytical methods are modifications of EPA Test Method 610 and 625, *Methods for Organic Chemical Analysis of Municipal and Industrial Wastewater*, and Methods 8000, 8270, and 8310, *Test Methods for Evaluation of Solid Waste*.

1.2 Fluorescence methods were among the very first methods used for detection of B[a]P and other PAHs as carcinogenic constituents of coal tar (1-7). Fluorescence methods are capable of measuring subnanogram quantities of PAHs, but tend to be fairly non-selective. The normal spectra obtained are often intense and lack resolution. Efforts to overcome this difficulty led to the use of ultraviolet (UV) absorption spectroscopy (8) as the detection method coupled with pre-speciated techniques involving liquid chromatography (LC) and thin layer chromatography (TLC) to isolate specific PAHs, particularly B[a]P. As with fluorescence spectroscopy, the individual spectra for various PAHs are unique, although portions of spectra for different compounds may be the same. As with fluorescence techniques, the possibility of spectral overlap requires complete separation of sample components to ensure accurate measurement of component levels. Hence, the use of UV absorption coupled with pre-speciation involving LC and TLC and fluorescence spectroscopy declined and was replaced with the more sensitive high performance liquid chromatography (HPLC) with UV/fluorescence detection (9) or highly sensitive and specific gas chromatography/mass spectrometry (GC/MS) for detection (10-11).

1.3 The choice of GC/MS as the recommended procedure for analysis of B[a]P and other PAHs was influenced by its sensitivity and selectivity, along with its ability to analyze complex samples.

1.4 The analytical methodology has consequently been defined, but the sampling procedures can reduce the validity of the analytical results. Recent studies (12-17) have indicated that non-volatile PAHs (vapor pressure $<10^{-8}$ mm Hg) may be trapped on the filter, but post-collection volatilization problems may distribute the PAHs downstream of the filter to the back-up sorbent. A wide variety of sorbents such as Tenax®, XAD-2® and polyurethane foam (PUF) have been used to sample common PAHs. All sorbents have demonstrated high collection efficiency for B[a]P in particular. In general, XAD-2® resin has a higher collection efficiency (18-21) for volatile PAHs than PUF, as well as a higher retention efficiency. PUF cartridges, however, are easier to handle in the field and maintain better flow characteristics during sampling. Likewise, PUF has demonstrated (22) its capability in sampling organochlorine pesticides, polychlorinated biphenyls (22), and polychlorinated dibenzo-p-dioxins (23). PUF also has demonstrated a lower recovery efficiency and storage capability for naphthalene than XAD-2®. There have been no significant losses of PAHs up to 30 days of storage at room temperature (23°C) using XAD-2®. It also appears that XAD-2® resin has a higher collection efficiency for volatile PAHs than PUF, as well as a higher retention efficiency for both volatile and reactive PAHs.

Consequently, while the literature cites weaknesses and strengths of using either XAD-2® or PUF, this method includes the utilization of PUF as the primary sorbent.

1.5 This method includes the qualitative and quantitative analysis of the following PAHs (see Figure 1) specifically by utilizing PUF as the sorbent followed by GC/MS analysis:

Acenaphthene (low collection efficiency; see Section 6.1.3)	Coronene
Acenaphthylene (low collection efficiency; see Section 6.1.3)	Dibenz(a,h)anthracene
Anthracene	Fluoranthene
Benz(a)anthracene	Fluorene
Benzo(a)pyrene	Benzo(b)fluoranthene
Benzo(e)pyrene	Indeno(1,2,3-cd)pyrene
Benzo(g,h,i)perylene	Naphthalene (low collection efficiency; see Section 6.1.3)
Benzo(k)fluoranthene	Phenanthrene
Chrysene	Pyrene
	Perylene

The GC/MS method is applicable to the determination of PAHs compounds involving three member rings or higher. Naphthalene, acenaphthylene, and acenaphthene have only ~35 percent recovery when using PUF as the sorbent. Nitro-PAHs have *not* been fully evaluated using this procedure; therefore, they are not included in this method.

1.6 With optimization to reagent purity and analytical conditions, the detection limits for the GC/MS method range from 1 ng to 10 pg based on field experience.

2. Summary of Method

2.1 Filters and sorbent cartridges (containing PUF or XAD-2®) are cleaned in solvents and vacuum dried. The filters and sorbent cartridges are stored in screw-capped jars wrapped in aluminum foil (or otherwise protected from light) before careful installation on the sampler.

2.2 Approximately 300 m^3 of air is drawn through the filter and sorbent cartridge using a high-volume flow rate air sampler or equivalent.

2.3 The amount of air sampled through the filter and sorbent cartridge is recorded, and the filter and cartridge are placed in an appropriately labeled container and shipped along with blank filter and sorbent cartridges to the analytical laboratory for analysis.

2.4 The filters and sorbent cartridge are extracted by Soxhlet extraction with appropriate solvent. The extract is concentrated by Kuderna-Danish (K-D) evaporator, followed by silica gel cleanup using column chromatography to remove potential interferences prior to analysis by GC/MS.

2.5 The eluent is further concentrated by K-D evaporation, then analyzed by GC/MS. The analytical system is verified to be operating properly and calibrated with five concentration calibration solutions.

2.6 A preliminary analysis of the sample extract is performed to check the system performance and to ensure that the samples are within the calibration range of the instrument. If the preliminary analysis indicates non-performance, then recalibrate the instrument, adjust the amount of the sample injected, adjust the calibration solution concentration, and adjust the data processing system to reflect observed retention times, etc.

2.7 The samples and the blanks are analyzed and used (along with the amount of air sampled) to calculate the concentration of PAHs in the air sample.

3. Significance

3.1 As discussed in Section 1, several documents have been published that describe sampling and analytical approaches for common PAHs. The attractive features of these methods have been combined in this procedure. Although this method has been validated in the laboratory, one must use caution when employing it for specific applications.

3.2 Because of the relatively low levels of common PAHs in the environment, the methodology suggest the use of high volume (0.22 m^3/min) sampling technique to acquire sufficient sample for analysis. However, the volatility of certain PAHs prevents efficient collection on filter media alone. Consequently, this method utilizes both a filter and a backup sorbent cartridge, which provides for efficient collection of most PAHs involving three member rings or higher.

4. Applicable Documents

4.1 ASTM Standards

- **Method D1356** *Definitions of Terms Relating to Atmospheric Sampling and Analysis.*
- **Method 4861-94** *Standard Practice for Sampling and Analysis of Pesticides and Polychlorinated Biphenyl in Air*
- **Method E260** *Recommended Practice for General Gas Chromatography Procedures.*
- **Method E355** *Practice for Gas Chromatography Terms and Relationships.*
- **Method E682** *Practice for Liquid Chromatography Terms and Relationships.*

4.2 EPA Documents

- *Technical Assistance Document for Sampling and Analysis of Toxic Organic Compounds in Ambient Air*, U. S. Environmental Protection Agency, EPA-600/4-83-027, June 1983.
- *Quality Assurance Handbook for Air Pollution Measurement Systems*, U. S. Environmental Protection Agency, EPA-600/R-94-038b, May 1994.
- *Compendium of Methods for the Determination of Toxic Organic Compounds in Ambient Air: Method TO-13, Second Supplement*, U. S. Environmental Protection Agency, EPA-600/-4-89-018, March 1989.

4.3 Other Documents

- Existing Procedures (24-32).
- Ambient Air Studies (33-50).
- General Metal Works, Inc., "Operating Procedures for Model PS-1 Sampler," Village of Cleves, OH 45002 (800-543-7412).
- Illinois Environmental Protection Agency, Division of Air Quality, "Chicago Air Quality: PCB Air Monitoring Plan (Phase 2)," Chicago, IL, IEAP/APC/86/011, April 1986.
- Thermo Environmental, Inc. (formerly Wedding and Associates), "Operating Procedures for the Thermo Environmental Semi-Volatile Sampler," 8 West Forge Parkway, Franklin, MA 02038 (508-520-0430).
- American Chemical Society (ACS), "Sampling for Organic Chemicals in Air," *ACS Professional Book*, ACS, Washington, D.C., 1996.
- International Organization for Standardization (ISO), "Determination of Gas and Particle-Phase Polynuclear Aromatic Hydrocarbons in Ambient Air - Collected on Sorbent-Backed Filters with Gas Chromatographic/Mass Spectrometric Analysis," ISO/TC 146/SC 3/WG 17N, Case Postale 56, CH-1211, Genève 20, Switzerland.

5. Definitions

[Note: Definitions used in this document and in any user-prepared standard operating procedures (SOPs) should be consistent with ASTM Methods D1356, E260, and E255. All abbreviations and symbols are defined within this document at point of use.]

5.1 **Retention time (RT)**-time to elute a specific chemical from a chromatographic column. For a specific carrier gas flow rate, RT is measured from the time the chemical is injected into the gas stream until it appears at the detector.

5.2 **Sampling efficiency (SE)**-ability of the sampler to trap and retain PAHs. The %SE is the percentage of the analyte of interest collected and retained by the sampling medium when it is introduced into the air sampler and the sampler is operated under normal conditions for a period of time equal to or greater than that required for the intended use.

5.3 **Dynamic retention efficiency**-ability of the sampling medium to retain a given PAH that has been added to the sorbent trap in a spiking solution when air is drawn through the sampler under normal conditions for a period of time equal to or greater than that required for the intended use.

5.4 **Polycyclic aromatic hydrocarbons (PAHs)**-two or more fused aromatic rings.

5.5 **Method detection limit (MDL)**-the minimum concentration of a substance that can be measured and reported with confidence and that the value is above zero.

5.6 **Kuderna-Danish apparatus**-the Kuderna-Danish (K-D) apparatus is a system for concentrating materials dissolved in volatile solvents.

5.7 **MS-SCAN**-the GC is coupled to a mass spectrometer where the instrument is programmed to acquire all ion data.

5.8 Sublimation-the direct passage of a substance from the solid state to the gaseous state and back into the solid form without at any time appearing in the liquid state. Also applied to the conversion of solid to vapor without the later return to solid state, and to a conversion directly from the vapor phase to the solid state.

5.9 Surrogate standard-a chemically inert compound (not expected to occur in the environmental sample) that is added to each sample, blank, and matrix-spiked sample before extraction and analysis. The recovery of the surrogate standard is used to monitor unusual matrix effects, gross sample processing errors, etc. Surrogate recovery is evaluated for acceptance by determining whether the measured concentration falls within acceptable limits.

5.10 CAL-calibration standards are defined as five levels of calibration: CAL 1, CAL 2, CAL 3, CAL 4, and CAL 5. CAL 1 is the lowest concentration and CAL 5 is the highest concentration. CAL 3, which is the mid-level standard, is designated as the solution to be used for continuing calibrations.

5.11 Continuing calibration check-a solution of method analytes used to evaluate the mass spectrometer response over a period of time. A continuing calibration check (CCC) is performed once each 12-hour period. The CCC solution (CAL 3) is the standard of the calibration curve.

5.12 GC Response (A_x)-the peak area or height of analyte, x.

5.13 Internal standard (IS)-a compound added to a sample extract in known amounts and used to calibrate concentration measurements of other compounds that are sample components. The internal standard must be a compound that is not a sample component.

6. Limitations and Interferences

6.1 Limitations

6.1.1 PAHs span a broad spectrum of vapor pressures (e.g., from 1.1 x 10^{-2} kPa for naphthalene to 2 x 10^{-13} kPa for coronene at 25°C). PAHs that are frequently found in ambient air are listed in Table 1. Those with vapor pressures above approximately 10^{-8} kPa will be present in the ambient air substantially distributed between the gas and particulate phases. This method will permit the collection of both phases.

6.1.2 Particulate-phase PAHs will tend to be lost from the particle filter during sampling due to volatilization. Therefore, separate analysis of the filter will not reflect the concentrations of the PAHs originally associated with particles, nor will analysis of the sorbent provide an accurate measure of the gas phase. Consequently, this method calls for *extraction of the filter and sorbent together* to permit accurate measurement of total PAH air concentrations.

6.1.3 Naphthalene, acenaphthylene, and acenaphthene possess relatively high vapor pressures and may not be efficiently trapped by this method when using PUF as the sorbent. The sampling efficiency for naphthalene has been determined to be about 35 percent for PUF. The user is encouraged to use XAD-2® as the sorbent if these analytes are part of the target compound list (TCL).

6.2 Interferences

6.2.1 Method interferences may be caused by contaminants in solvents, reagents, glassware, and other sample processing hardware that result in discrete artifacts and/or elevated baselines in the detector profiles. All of these materials must be routinely demonstrated to be free from interferences under the conditions of the analysis by running laboratory reagent blanks.

6.2.2 Glassware must be scrupulously cleaned (51). All glassware should be cleaned as soon as possible after use by rinsing with the last solvent used in it and then high-purity acetone and hexane. These rinses should be followed by detergent washing with hot water and rinsing with copious amounts of tap water and several portions of reagent water. The glassware should then be drained dry and heated in a muffle furnace at 400°C for four hours. Volumetric glassware must not be heated in a muffle furnace; rather it should be solvent rinsed with acetone and spectrographic grade hexane. After drying and rinsing, glassware should be sealed and stored in a clean environment to prevent any accumulation of dust or other contaminants. Glassware should be stored inverted or capped with aluminum foil.

[Note: The glassware may be further cleaned by placing in a muffle furnace at 450°C for 8 hours to remove trace organics.]

6.2.3 The use of high purity water, reagents, and solvents helps to minimize interference problems. Purification of solvents by distillation in all-glass systems may be required.

6.2.4 Matrix interferences may be caused by contaminants that are coextracted from the sample. Additional clean-up by column chromatography may be required (see Section 12.3).

6.2.5 During sample transport and analysis, heat, ozone, NO_2, and ultraviolet (UV) light may cause sample degradation. Incandescent or UV-shielded fluorescent lighting in the laboratory should be used during analysis.

6.2.6 The extent of interferences that may be encountered using GC/MS techniques has not been fully assessed. Although GC conditions described allow for unique resolution of the specific PAH compounds covered by this method, other PAH compounds may interfere. The use of column chromatography for sample clean-up prior to GC analysis will eliminate most of these interferences. The analytical system must, however, be routinely demonstrated to be free of internal contaminants such as contaminated solvents, glassware, or other reagents which may lead to method interferences. A laboratory reagent blank should be analyzed for each reagent used to determine if reagents are contaminant-free.

6.2.7 Concern about sample degradation during sample transport and analysis was mentioned above. Heat, ozone, NO_2, and ultraviolet (UV) light also may cause sample degradation. These problems should be addressed as part of the user-prepared standard operating procedure (SOP) manual. Where possible, incandescent or UV-shielded fluorescent lighting should be used during analysis. During transport, field samples should be shipped back to the laboratory chilled (~4°C) using blue ice/dry ice.

7. Safety

7.1 The toxicity or carcinogenicity of each reagent used in this method has not been precisely defined; however, each chemical compound should be treated as a potential health hazard. From this viewpoint, exposure to these chemicals must be reduced to the lowest possible level by whatever means available. The laboratory is responsible for maintaining a current awareness file of Occupational Safety and Health Administration (OSHA) regulations regarding the safe handling of the chemicals specified in this method. A reference file of material safety data sheets (MSDSs) should also be made available to all personnel involved in the chemical analysis. Additional references to laboratory safety are available and are included in the reference list (52-54).

7.2 B[a]P has been tentatively classified as a known or suspected, human or mammalian carcinogen. Many of the other PAHs have been classified as carcinogens. Care must be exercised when working with these substances. This method does not purport to address all of the safety problems associated with its use. It is the responsibility of whomever uses this method to consult and establish appropriate safety and health practices and determine the applicability of regulatory limitations prior to use. The user should be thoroughly familiar with the chemical and physical properties of targeted substances (see Table 1 and Figure 1).

7.3 All PAHs should be treated as carcinogens. Neat compounds should be weighed in a glove box. Spent samples and unused standards are toxic waste and should be disposed according to regulations. Counter tops and equipment should be regularly checked with "black light" for fluorescence as an indicator of contamination.

7.4 The sampling configuration (filter and backup sorbent) and collection efficiency for target PAHs has been demonstrated to be greater than 95 percent (except for naphthalene, acenaphthylene and acenaphthene). Therefore, no field recovery evaluation will be required as part of this procedure.

[Note: Naphthalene, acenaphthylene and acenaphthene have demonstrated significant breakthrough using PUF cartridges, especially at summer ambient temperatures. If naphthalene, acenaphthylene and acenaphthene are target PAHs, the user may want to consider replacing the PUF with XAD-2® in order to minimize breakthrough during sampling.]

8. Apparatus

[Note: This method was developed using the PS-1 semi-volatile sampler provided by General Metal Works, Village of Cleves, OH as a guideline. EPA has experience in the use of this equipment during various field-monitoring programs over the last several years. Other manufacturers' equipment should work as well; however, modifications to these procedures may be necessary if another commercially available sampler is selected.]

8.1 Sampling

8.1.1 High-volume sampler (see Figure 2). Capable of pulling ambient air through the filter/sorbent cartridge at a flow rate of approximately 8 standard cubic feet per minute (scfm) (0.225 std m^3/min) to obtain a total sample volume of greater than 300 m^3 over a 24-hour period. Major manufacturers are:

- Tisch Environmental, Village of Cleves, OH
- Andersen Instruments Inc., 500 Technology Ct., Smyrna, GA
- Thermo Environmental Instruments, Inc., 8 West Forge Parkway, Franklin, MA

Recent EPA studies have concluded that sample volumes *less than* 300 m^3 still collect enough PAHs on the filter/PUF for quantitation. The user is encouraged to investigate appropriate sample volume needed to meet project specific data quality objectives.

8.1.2 Sampling module (see Figure 3). Metal filter holder (Part 2) capable of holding a 102-mm circular particle filter supported by a 16-mesh stainless-steel screen and attaching to a metal cylinder (Part 1) capable of holding a 65-mm O.D. (60-mm I.D.) x 125-mm borosilicate glass sorbent cartridge containing PUF or XAD-2®. The filter holder is equipped with inert sealing gaskets (e.g., polytetrafluorethylene) placed on either side of the

filter. Likewise, inert, pliable gaskets (e.g., silicone rubber) are used to provide an air-tight seal at each end of the glass sorbent cartridge. The glass sorbent cartridge is indented 20 mm from the lower end to provide a support for a 16-mesh stainless-steel screen that holds the sorbent. The glass sorbent cartridge fits into Part 1, which is screwed onto Part 2 until the sorbent cartridge is sealed between the silicone gaskets. Major manufacturers are:

- Tisch Environmental, Village of Cleves, OH
- Andersen Instruments Inc., 500 Technology Ct., Smyrna, GA
- Thermo Environmental Instruments, Inc., 8 West Forge Parkway, Franklin, MA

8.1.3 High-volume sampler calibrator. Capable of providing multipoint resistance for the high-volume sampler. Major manufacturers are:

- Tisch Environmental, Village of Cleves, OH
- Andersen Instruments Inc., 500 Technology Ct., Smyrna, GA
- Thermo Environmental Instruments, Inc., 8 West Forge Parkway, Franklin, MA

8.1.4 Ice chest. To hold samples at 4°C or below during shipment to the laboratory after collection.

8.1.5 Data sheets. Used for each sample to record the location and sample time, duration of sample, starting time, and volume of air sampled.

8.2 Sample Clean-Up and Concentration (see Figure 4).

8.2.1 Soxhlet apparatus extractor (see Figure 4a). Capable of extracting filter and sorbent cartridges (5.75-cm x 12.5-cm length), 1,000 mL flask, and condenser, best source.

8.2.2 Pyrex glass tube furnace system. For activating silica gel at 180°C under purified nitrogen gas purge for an hour, with capability of raising temperature gradually, best source.

8.2.3 Glass vial. 40 mL, best source.

8.2.4 Erlenmeyer flask. 50 mL, best source.

[Note: Reuse of glassware should be minimized to avoid the risk of cross contamination. All glassware that is used must be scrupulously cleaned as soon as possible after use. Rinse glassware with the last solvent used in it and then with high-purity acetone and hexane. Wash with hot water containing detergent. Rinse with copious amounts of tap water and several portions of distilled water. Drain, dry, and heat in a muffle furnace at 400°C for 4 hours. Volumetric glassware must not be heated in a muffle furnace; rather, it should be rinsed with high-purity acetone and hexane. After the glassware is dry and cool, rinse it with hexane, and store it inverted or capped with solvent-rinsed aluminum foil in a clean environment.]

8.2.5 White cotton gloves. For handling cartridges and filters, best source.

8.2.6 Minivials. 2 mL, borosilicate glass, with conical reservoir and screw caps lined with Teflon®-faced silicone disks, and a vial holder, best source.

8.2.7 Teflon®-coated stainless steel spatulas and spoons. Best source.

8.2.8 Kuderna-Danish (K-D) apparatus (see Figure 4b). 500 mL evaporation flask (Kontes K-570001-500 or equivalent), 10 mL graduated concentrator tubes (Kontes K570050-1025 or equivalent) with ground-glass stoppers, 1 mL calibrated K-D concentration tubes, and 3-ball macro Snyder Column (Kontes K-570010500, K-50300-0121, and K-569001-219, or equivalent), best source.

8.2.9 Adsorption column for column chromatography (see Figure 4c). 1-cm x 10-cm with stands.

8.2.10 Glove box. For working with extremely toxic standards and reagents with explosion-proof hood for venting fumes from solvents, reagents, etc.

8.2.11 Vacuum oven. Vacuum drying oven system capable of maintaining a vacuum at 240 torr (flushed with nitrogen) overnight.

8.2.12 Concentrator tubes and a nitrogen evaporation apparatus with variable flow rate. Best source.

8.2.13 Laboratory refrigerator. Best source.

8.2.14 Boiling chips. Solvent extracted, 10/40 mesh silicon carbide or equivalent, best source.

8.2.15 Water bath. Heated, with concentric ring cover, capable of ±5°C temperature control, best source.

8.2.16 Nitrogen evaporation apparatus. Best source.

8.2.17 Glass wool. High grade, best source.

8.3 Sample Analysis

8.3.1 Gas Chromatography with Mass Spectrometry Detection Coupled with Data Processing System (GC/MS/DS). The gas chromatograph must be equipped for temperature programming, and all required accessories must be available, including syringes, gases, and a capillary column. The gas chromatograph injection port must be designed for capillary columns. The use of splitless injection techniques is recommended. On-column injection techniques can be used, but they may severely reduce column lifetime for nonchemically bonded columns. In this protocol, a 2 µL injection volume is used consistently to maximize auto sampler reproducibility. With some gas chromatograph injection ports, however, 1 µL injections may produce some improvement in precision and chromatographic separation. A 1 µL injection volume may be used if adequate sensitivity and precision can be achieved.

[Note: If 1 µL is used as the injection volume, the injection volumes for all extracts, blanks, calibration solutions and performance check samples must be 1 µL.]

All GC carrier gas lines must be constructed from stainless steel or copper tubing. Poly-tetrafluoroethylene (PTFE) thread sealants or flow controllers should only be used.

8.3.2 Gas chromatograph-mass spectrometer interface. The GC is usually coupled directly to the MS source. The interface may include a diverter valve for shunting the column effluent and isolating the mass spectrometer source. All components of the interface should be glass or glass-lined stainless steel. Glass can be deactivated by silanizing with dichorodimethylsilane. The interface components should be compatible with 320°C temperatures. Cold spots and/or active surfaces (adsorption sites) in the GC/MS interface can cause peak tailing and peak broadening. It is recommended that the GC column be fitted directly into the MS source. Graphite ferrules should be avoided in the gas chromatograph injection area since they may adsorb PAHs. Vespel® or equivalent ferrules are recommended.

8.3.3 Mass spectrometer. The MS should be operated in the full range data acquisition (SCAN) mode with a total cycle time (including voltage reset time) of one second or less (see Section 13.3.2). Operation of the MS in the SCAN mode allows monitoring of all ions, thus assisting with the identification of other PAHs beyond Compendium Method TO-13A target analyte list. In addition, operating in the SCAN mode assists the analyst with identification of possible interferences from non-target analytes due to accessibility of the complete mass spectrum in the investigative process. The MS must be capable of scanning from 35 to 500 amu every 1 sec or less, using 70 volts (nominal) electron energy in the electron impact (EI) ionization mode. The mass spectrometer must be capable of producing a mass spectrum for a 50 ng injection of decafluorotriphyenyl phosphine (DFTPP) which meets all of the response criteria (see Section 13.3.3). To ensure sufficient precision of mass spectral data, the MS scan rate must allow acquisition of at least five scans while a sample compound elutes from the GC. The

GC/MS system must be in a room with atmosphere demonstrated to be free of all potential contaminants which will interfere with the analysis. The instrument must be vented outside the facility or to a trapping system which prevents the release of contaminants into the instrument room.

8.3.4 Data system. A dedicated computer data system is employed to control the rapid multiple ion monitoring process and to acquire the data. Quantification data (peak areas or peak heights) and multi-ion detector (MID) traces (displays of intensities of each m/z being monitored as a function of time) must be acquired during the analyses. Quantifications may be reported based upon computer generated peak areas or upon measured peak heights (chart recording). The detector zero setting must allow peak-to-peak measurement of the noise on the baseline. The computer should have software that allows searching the GC/MS data file for ions of a specific mass and plotting such ion abundances versus time or scan number. This type of plot is defined as Selected Ion Current Profile (SICP). The software used must allow integrating the abundance in any SICP between specified time or scan number limits. The data system should be capable of flagging all data files that have been edited manually by laboratory personnel.

8.3.5 Gas chromatograph column. A fused silica DB-5 column (30 m x 0.32 mm I.D.) crosslinked 5 percent phenyl methylsilicone, 1.0 µm film thickness is utilized to separate individual PAHs. Other columns may be used for determination of PAHs. Minimum acceptance criteria must be determined as per Section 13.3. At the beginning of each 12-hour period (after mass resolution has been demonstrated) during which sample extracts or concentration calibration solutions will be analyzed, column operating conditions must be attained for the required separation on the column to be used for samples.

8.3.6 Balance. Mettler balance or equivalent.

8.3.7 All required syringes, gases, and other pertinent supplies. To operate the GC/MS system.

8.3.8 Pipettes, micropipettes, syringes, burets, etc. Used to make calibration and spiking solutions, dilute samples if necessary, etc., including syringes for accurately measuring volumes such as 25 µL and 100 µL.

9. Equipment and Materials

9.1 Materials for Sample Collection (see Figure 3)

9.1.1 Quartz fiber filter. 102 millimeter binderless quartz microfiber filter, Whatman Inc., 6 Just Road, Fairfield, NJ 07004, Filter Type QMA-4.

9.1.2 Polyurethane foam (PUF) plugs (see Figure 5a). 3-inch thick sheet stock polyurethane type (density .022 g/cm^3). The PUF should be of the polyether type used for furniture upholstery, pillows, and mattresses. The PUF cylinders (plugs) should be slightly larger in diameter than the internal diameter of the cartridge. Sources of equipment are Tisch Environmental, Village of Cleves, OH; University Research Glassware, 116 S. Merritt Mill Road, Chapel Hill, NC; Thermo Environmental Instruments, Inc., 8 West Forge Parkway, Franklin, MA; Supelco, Supelco Park, Bellefonte, PA; and SKC Inc., 334 Valley View Road, Eighty Four, PA.

9.1.3 XAD-2® resin (optional). Supelco, Supelco Park, Bellefonte, PA.

9.1.4 Teflon® end caps (see Figure 5a). For sample cartridge; sources of equipment are Tisch Environmental, Village of Cleves, OH; and University Research Glassware, 116 S. Merritt Mill Road, Chapel Hill, NC.

9.1.5 Sample cartridge aluminum shipping containers (see Figure 5b). For sample cartridge shipping; sources of equipment are Tisch Environmental, Village of Cleves, OH; and University Research Glassware, 116 S. Merritt Mill Road, Chapel Hill, NC.

9.1.6 Glass sample cartridge (see Figure 5a). For sample collection; sources of equipment are Tisch Environmental, Village of Cleves, OH; Thermo Environmental Instruments, Inc., 8 West Forge Parkway, Franklin, MA; and University Research Glassware, 116 S. Merritt Mill Road, Chapel Hill, NC.

9.1.7 Aluminum foil. Best source.

9.1.8 Hexane, reagent grade. Best source.

9.2 Sample Clean-up and Concentration

9.2.1 Methylene chloride (extraction solvent for XAD-2®; optional). Chromatographic grade, glass-distilled, best source.

9.2.2 Sodium sulfate-anhydrous (ACS). Granular (purified by washing with methylene chloride followed by heating at 400°C for 4 hours in a shallow tray).

9.2.3 Boiling chips. Solvent extracted or heated in a muffle furnace at 450°C for 2 hours, approximately 10/40 mesh (silicon carbide or equivalent).

9.2.4 Nitrogen. High purity grade, best source.

9.2.5 Hexane. Chromatographic grade, glass-distilled, best source (extraction solvent for PUF).

9.2.6 Glass wool. Silanized, extracted with methylene chloride and hexane, and dried.

9.2.7 Diethyl ether. High purity, glass distilled (extraction solvent for PUF).

9.2.8 Pentane. High purity, glass distilled.

9.2.9 Silica gel. High purity, type 60, 70-230 mesh.

9.3 GC/MS Sample Analysis

9.3.1 Gas cylinder of helium. Ultra high purity, best source.

9.3.2 Chromatographic-grade stainless steel tubing and stainless steel fitting. For interconnections, Alltech Applied Science, 2051 Waukegan Road, Deerfield, IL 60015, 312-948-8600, or equivalent.

[Note: All such materials in contact with the sample, analyte, or support gases prior to analysis should be stainless steel or other inert metal. Do not use plastic or Teflon® tubing or fittings.]

9.3.3 Native and isotopically labeled PAH isomers for calibration and spiking standards. Cambridge Isotopes, 20 Commerce Way, Woburn, MA 01801 (617-547-1818). Suggested isotopically labeled PAH isomers are: D_{10}-fluoranthene, D_{12}-benzo(a)pyrene, D_{10}-fluorene, D_{10}-pyrene, D_{12}-perylene, D_{10}-acenaphthene, D_{12}-chrysene, D_8-naphthalene and D_{10}-phenanthrene.

9.3.4 Decafluorotriphenylphosphine (DFTPP). Used for tuning GC/MS, best source.

9.3.5 Native stock pure standard PAH analytes. For developing calibration curve for GC/MS analysis, best source.

10. Preparation of PUF Sampling Cartridge

[Note: This method was developed using the PS-1 sample cartridge provider by General Metal Works, Village of Cleves, OH as a guideline. EPA has experience in use of this equipment during various field monitoring program over the last several years. Other manufacturers' equipment should work as well; however, modifications to these procedures may be necessary if another commercially available sampler is selected.]

10.1 Summary of Method

10.1.1 This part of the procedure discusses pertinent information regarding the preparation and cleaning of the filter, sorbent, and filter/sorbent cartridge assembly. The separate batches of filters and sorbents are extracted with the appropriate solvent.

10.1.2 At least one PUF cartridge assembly and one filter from each batch, or 10 percent of the batch, whichever is greater, should be tested and certified before the batch is considered for field use.

10.1.3 Prior to sampling, the cartridges are spiked with field surrogate compounds.

10.2 Preparation of Sampling Cartridge

10.2.1 Bake the Whatman QMA-4 quartz filters at 400°C for 5 hours before use.

10.2.2 Set aside the filters in a clean container for shipment to the field or prior to combining with the PUF glass cartridge assembly for certification prior to field deployment.

10.2.3 The PUF plugs are 6.0-cm diameter cylindrical plugs cut from 3-inch sheet stock and should fit, with slight compression, in the glass cartridge, supported by the wire screen (see Figure 5a). During cutting, rotate the die at high speed (e.g., in a drill press) and continuously lubricate with deionized or distilled water. Pre-cleaned PUF plugs can be obtained from commercial sources (see Section 9.1.2).

10.2.4 For initial cleanup, place the PUF plugs in a Soxhlet apparatus and extract with acetone for 16 hours at approximately 4 cycles per hour. When cartridges are reused, use diethyl ether/hexane (5 to 10 percent volume/volume [v/v]) as the cleanup solvent.

[Note: A modified PUF cleanup procedure can be used to remove unknown interference components of the PUF blank. This method consists of rinsing 50 times with toluene, acetone, and diethyl ether/hexane (5 to 10 percent v/v), followed by Soxhlet extraction. The extracted PUF is placed in a vacuum oven connected to a water aspirator and dried at room temperature for approximately 2 to 4 hours (until no solvent odor is detected). The extract from the Soxhlet extraction procedure from each batch may be analyzed to determine initial cleanliness prior to certification.]

10.2.5 If using XAD-2® in the cartridge, initial cleanup of the resin is performed by placing approximately 50-60 grams in a Soxhlet apparatus and extracting with methylene chloride for 16 hours at approximately 4 cycles per hour. At the end of the initial Soxhlet extraction, the spent methylene chloride is discarded and replaced with a fresh reagent. The XAD-2® resin is once again extracted for 16 hours at approximately 4 cycles per hour. The XAD-2® resin is removed from the Soxhlet apparatus, placed in a vacuum oven connected to an ultra-pure nitrogen gas stream, and dried at room temperature for approximately 2-4 hours (until no solvent odor is detected).

10.2.6 Fit a nickel or stainless steel screen (mesh size 200/200) to the bottom of a hexane-rinsed glass sampling cartridge to retain the PUF or XAD-2® sorbents, as illustrated in Figure 5a. If using XAD-2® alone, then place a small diameter (~1/4") PUF plug on top of the nickel or stainless steel screen to retain the XAD-2® in the glass cartridge. Place the Soxhlet-extracted, vacuum-dried PUF (2.5-cm thick by 6.5-cm diameter) on top of the screen in the glass sampling cartridge using polyester gloves. Place ~200 g of the clean XAD-2® inside the glass sampling cartridge on top of the small diameter PUF plug.

10.2.7 Wrap the sampling cartridge with hexane-rinsed aluminum foil, cap with the Teflon® end caps (optional), place in a cleaned labeled aluminum shipping container, and seal with Teflon® tape. Analyze at least 1 cartridge from each batch of cartridges prepared using the procedure described in Section 10.3, before the batch is considered acceptable for field use.

The acceptance level of the cartridge is for each target PAH analyte to be less than or equal to the detection limit requirements to meet the project data quality objectives. It is generally not possible to eliminate the presence of naphthalene, but the amount detected on the cleaned PUF cartridge should be less than five times the concentration of the lowest calibration standard (~500 ng). This amount is insignificant compared to the amount collected from a typical air sample.

In general, the following guidelines are provided in determining whether a cartridge is clean for field use:

- Naphthalene <500 ng/cartridge
- Other PAHs <200 ng total/cartridge

10.3 Procedure for Certification of PUF Cartridge Assembly

[Note: The following procedure outlines the certification of a filter and PUF cartridge assembly. If using XAD-2® as the sorbent, the procedure remains the same, except the solvent is methylene chloride rather than 10 percent diethyl ether/hexane.]

10.3.1 Extract one filter and PUF sorbent cartridge by Soxhlet extraction and concentrate using a K-D evaporator for each lot of filters and cartridges sent to the field.

10.3.2 Assemble the Soxhlet apparatus. Charge the Soxhlet apparatus (see Figure 4a) with 700 mL of the extraction solvent (10 percent v/v diethyl ether/hexane) and reflux for 2 hours. Let the apparatus cool, disassemble it, and discard the used extraction solvent. Transfer the filter and PUF glass cartridge to the Soxhlet apparatus (the use of an extraction thimble is optional).

[Note: The filter and sorbent assembly are tested together in order to reach detection limits, to minimize cost and to prevent misinterpretation of the data. Separate analyses of the filter and PUF would not yield useful information about the physical state of most of the PAHs at the time of sampling due to evaporative losses from the filter during sampling.]

10.3.3 Add between 300 and 350 mL of diethyl ether/hexane (10 percent v/v) to the Soxhlet apparatus. Reflux the sample for 18 hours at a rate of at least 3 cycles per hour. Allow to cool, then disassemble the apparatus.

10.3.4 Assemble a K-D concentrator (see Figure 4b) by attaching a 10-mL concentrator tube to a 500-mL evaporative flask.

10.3.5 Transfer the extract by pouring it through a drying column containing about 10 cm of anhydrous granular sodium sulfate (see Figure 4c) and collect the extract in the K-D concentrator. Rinse the Erlenmeyer flask and column with 20 to 30 mL of 10 percent diethyl ether/hexane to complete the quantitative transfer.

10.3.6 Add one or two clean boiling chips and attach a 3-ball Snyder column to the evaporative flask. Pre-wet the Snyder column by adding about 1 mL of the extraction solvent to the top of the column. Place the K-D apparatus on a hot water bath (~50°C) so that the concentrator tube is partially immersed in the hot water, and the entire lower rounded surface of the flask is bathed with hot vapor. Adjust the vertical position of the apparatus and the water temperature as required to complete the concentration in 1 hour. At the proper rate of distillation, the balls of the column will actively chatter, but the chambers will not flood with condensed solvent. When the apparent volume of liquid reaches approximately 5 mL, remove the K-D apparatus from the water bath and allow it to drain and cool for at least 5 minutes. Remove the Snyder column and rinse the flask and its lower joint into the concentrator tube with 5 mL of cyclohexane. A 1-mL syringe is recommended for this operation.

10.3.7 Concentrate the extract to 5 mL and analyze using GC/MS.

10.3.8 The acceptance level of the cartridge is for each target PAH analyte to be less than or equal to the detection limit requirements to meet the project data quality objectives. It is generally not possible to eliminate the presence of naphthalene, but the amount detected on the cleaned PUF cartridge should be less than five times the concentration of the lowest calibration standard (~500 ng). This amount is insignificant compared to the amount collected from a typical air sample.

In general, the following guidelines are provided in determining whether a cartridge is clean for field use:

- Naphthalene <500 ng/cartridge
- Other PAHs <200 ng total/cartridge

Cartridges are considered clean for up to 30 days from date of certification when sealed in their containers.

10.4 Deployment of Cartridges for Field Sampling

10.4.1 Immediately prior to field deployment, add surrogate compounds (i.e., chemically inert compounds not expected to occur in an environmental sample) to the center of the PUF cartridge, using a microsyringe. Spike 20 μL of a 50 μg/mL solution of the surrogates onto the center bed of the PUF trap to yield a final concentration of 1 μg. The surrogate compounds must be added to each cartridge assembly. The following field surrogate compounds should be added to each PUF cartridge prior to field deployment to monitor matrix effects, breakthrough, etc.

Field Surrogate Compound	Total Spiked Amount (µg)
D_{10}-Fluoranthene	1
D_{12}-Benzo(a)pyrene	1

Fill out a "chain-of-custody" indicating cartridge number, surrogate concentration, date of cartridge certification, etc. The chain-of-custody must accompany the cartridge to the field and return to the laboratory.

10.4.2 Use the recoveries of the surrogate compounds to monitor for unusual matrix effects and gross sample processing errors. Evaluate surrogate recovery for acceptance by determining whether the measured concentration falls within the acceptance limits of 60-120 percent.

10.4.3 Cartridges are placed in their shipping containers and shipped to the field. Blank cartridges do not need to be chilled when shipping to the field until after exposure to ambient air.

11. Assembly, Calibration, and Collection Using Sampling System

[Note: This method was developed using the PS-1 semi-volatile sampler provided by General Metal Works, Village of Cleves, OH as a guideline. EPA has experience in the use of this equipment during various field monitoring programs over the last several years. Other manufacturers' equipment should work as well; however, modifications to these procedures may be necessary if another commercially available sampler is selected.]

11.1 Sampling Apparatus

The entire sampling system is diagrammed in Figure 2. This apparatus was developed to operate at a rate of 4 to 10 scfm (0.114 to 0.285 std m^3/min) and is used by EPA for high-volume sampling of ambient air. The method write-up presents the use of this device.

The sampling module (see Figure 3) consists of a filter and a glass sampling cartridge containing the PUF utilized to concentrate PAHs from the air. A field portable unit has been developed by EPA (see Figure 6).

11.2 Calibration of Sampling System

Each sampler should be calibrated (1) when new, (2) after major repairs or maintenance, (3) whenever any audit point deviates from the calibration curve by more than 7 percent, (4) before/after each sampling event, and (5) when a different sample collection medium, other than that which the sampler was originally calibrated to, will be used for sampling.

11.2.1 Calibration of Orifice Transfer Standard. Calibrate the modified high volume air sampler in the field using a calibrated orifice flow rate transfer standard. Certify the orifice transfer standard in the laboratory against a positive displacement rootsmeter (see Figure 7). Once certified, the recertification is performed rather infrequently if the orifice is protected from damage. Recertify the orifice transfer standard performed once per year utilizing a set of five multi-hole resistance plates.

[Note: The set of five multihole resistance plates is used to change the flow through the orifice so that several points can be obtained for the orifice calibration curve. The following procedure outlines the steps to calibrate the orifice transfer standard in the laboratory.]

11.2.1.1 Record the room temperature (T_1 in °C) and barometric pressure (P_b in mm Hg) on the Orifice Calibration Data Sheet (see Figure 8). Calculate the room temperature in K (absolute temperature) and record on Orifice Calibration Data Sheet.

$$T_1 \text{ in K} = 273° + T_1 \text{ in °C}$$

11.2.1.2 Set up laboratory orifice calibration equipment as illustrated in Figure 7. Check the oil level of the rootsmeter prior to starting. There are three oil level indicators, one at the clear plastic end, and two sight glasses, one at each end of the measuring chamber.

11.2.1.3 Check for leaks by clamping both manometer lines, blocking the orifice with cellophane tape, turning on the high-volume motor, and noting any change in the rootsmeter's reading. If the rootsmeter's reading changes, there is a leak in the system. Eliminate the leak before proceeding. If the rootsmeter's reading remains constant, turn off the hi-vol motor, remove the cellophane tape, and unclamp both manometer lines.

11.2.1.4 Install the 5-hole resistance plate between the orifice and the filter adapter.

11.2.1.5 Turn manometer tubing connectors one turn counter-clockwise. Make sure all connectors are open.

11.2.1.6 Adjust both manometer midpoints by sliding their movable scales until the zero point corresponds with the meniscus. Gently shake or tap to remove any air bubbles and/or liquid remaining on tubing connectors. (If additional liquid is required for the water manometer, remove tubing connector and add clean water.)

11.2.1.7 Turn on the high-volume motor and let it run for 5 minutes to set the motor brushes. Turn the motor off. Ensure manometers are set to zero. Turn the high-volume motor on.

11.2.1.8 Record the time in minutes required to pass a known volume of air (approximately 5.6 to 8.4 m^3 of air for each resistance plate) through the rootsmeter by using the rootsmeter's digital volume dial and a stopwatch.

11.2.1.9 Record both manometer readings [orifice water manometer (ΔH) and rootsmeter mercury manometer (ΔP)] on Orifice Calibration Data Sheet (see Figure 8).

[Note: ΔH is the sum of the difference from zero (0) of the two column heights.]

11.2.1.10 Turn off the high-volume motor.

11.2.1.11 Replace the 5-hole resistance plate with the 7-hole resistance plate.

11.2.1.12 Repeat Sections 11.2.1.3 through 11.2.1.11.

11.2.1.13 Repeat for each resistance plate. Note results on Orifice Calibration Data Sheet (see Figure 8). Only a minute is needed for warm-up of the motor. Be sure to tighten the orifice enough to eliminate any leaks. Also check the gaskets for cracks.

[Note: The placement of the orifice prior to the rootsmeter causes the pressure at the inlet of the rootsmeter to be reduced below atmospheric conditions, thus causing the measured volume to be incorrect. The volume measured by the rootsmeter must be corrected.]

11.2.1.14 Correct the measured volumes on the Orifice Calibration Data Sheet:

$$V_{std} = V_m \left(\frac{P_a - \Delta P}{P_{std}}\right)\left(\frac{T_{std}}{T_a}\right)$$

where:

V_{std} = standard volume, std m^3
V_m = actual volume measured by the rootsmeter, m^3
P_a = barometric pressure during calibration, mm Hg
ΔP = differential pressure at inlet to volume meter, mm Hg
P_{std} = 760 mm Hg
T_{std} = 298 K
T_a = ambient temperature during calibration, K.

11.2.1.15 Record standard volume on Orifice Calibration Data Sheet.

11.2.1.16 The standard flow rate as measured by the rootsmeter can now be calculated using the following formula:

$$Q_{std} = \frac{V_{std}}{\theta}$$

where:

Q_{std} = standard volumetric flow rate, std m^3/min
θ = elapsed time, min

11.2.1.17 Record the standard flow rates to the nearest 0.01 std m^3/min.

11.2.1.18 Calculate and record $\sqrt{\Delta H\ (P_1/P_{std})(298/T_1)}$ value for each standard flow rate.

11.2.1.19 Plot each $\sqrt{\Delta H\ (P_1/P_{std})(298/T_1)}$ value (y-axis) versus its associated standard flow rate (x-axis) on arithmetic graph paper and draw a line of best fit between the individual plotted points.

[Note: This graph will be used in the field to determine standard flow rate.]

11.2.2 Calibration of the High-Volume Sampling System Utilizing Calibrated Orifice Transfer Standard

For this calibration procedure, the following conditions are assumed in the field:

- The sampler is equipped with an valve to control sample flow rate.
- The sample flow rate is determined by measuring the orifice pressure differential using a Magnehelic gauge.
- The sampler is designed to operate at a standardized volumetric flow rate of 8 ft^3/min (0.225 m^3/min), with an acceptable flow rate range within 10 percent of this value.
- The transfer standard for the flow rate calibration is an orifice device. The flow rate through the orifice is determined by the pressure drop caused by the orifice and is measured using a "U" tube water manometer or equivalent.
- The sampler and the orifice transfer standard are calibrated to standard volumetric flow rate units (scfm or scmm).
- An orifice transfer standard with calibration traceable to NIST is used.
- A "U" tube water manometer or equivalent, with a 0- to 16-inch range and a maximum scale division of 0.1 inch, will be used to measure the pressure in the orifice transfer standard.
- A Magnehelic gauge or equivalent with a 9- to 100-inch range and a minimum scale division of 2 inches for measurements of the differential pressure across the sampler's orifice is used.
- A thermometer capable of measuring temperature over the range of 32° to 122°F (0° to 50°C) to ±2°F (±1°C) and referenced annually to a calibrated mercury thermometer is used.
- A portable aneroid barometer (or equivalent) capable of measuring ambient barometric pressure between 500 and 800 mm Hg (19.5 and 31.5 in. Hg) to the nearest mm Hg and referenced annually to a barometer of known accuracy is used.
- Miscellaneous handtools, calibration data sheets or station log book, and wide duct tape are available.

11.2.2.1 Set up the calibration system as illustrated in Figure 9. Monitor the airflow through the sampling system with a venturi/Magnehelic assembly, as illustrated in Figure 9. Audit the field sampling system once per quarter using a flow rate transfer standard, as described in the EPA *High-Volume Sampling Method, 40 CFR 50, Appendix B*. Perform a single-point calibration before and after each sample collection, using the procedures described in Section 11.2.3.

11.2.2.2 Prior to initial multi-point calibration, place an empty glass cartridge in the sampling head and activate the sampling motor. Fully open the flow control valve and adjust the voltage variator so that a sample flow rate corresponding to 110 percent of the desired flow rate (typically 0.20 to 0.28 m^3/min) is indicated on the Magnehelic gauge (based on the previously obtained multipoint calibration curve). Allow the motor to warm up for 10 min and then adjust the flow control valve to achieve the desire flow rate. Turn off the sampler. Record the ambient temperature and barometric pressure on the Field Calibration Data Sheet (see Figure 10).

11.2.2.3 Place the orifice transfer standard on the sampling head and attach a manometer to the tap on the transfer standard, as illustrated in Figure 9. Properly align the retaining rings with the filter holder and secure by tightening the three screw clamps. Connect the orifice transfer standard by way of the pressure tap to a

manometer using a length of tubing. Set the zero level of the manometer or Magnehelic. Attach the Magnehelic gauge to the sampler venturi quick release connections. Adjust the zero (if needed) using the zero adjust screw on face of the gauge.

11.2.2.4 To leak test, block the orifice with a rubber stopper, wide duct tape, or other suitable means. Seal the pressure port with a rubber cap or similar device. Turn on the sampler.

Caution: Avoid running the sampler for too long a time with the orifice blocked. This precaution will reduce the chance that the motor will be overheated due to the lack of cooling air. Such overheating can shorten the life of the motor.

11.2.2.5 Gently rock the orifice transfer standard and listen for a whistling sound that would indicate a leak in the system. A leak-free system will not produce an upscale response on the sampler's magnehelic. Leaks are usually caused either by damaged or missing gaskets, by cross-threading, and/or not screwing sample cartridge together tightly. All leaks must be eliminated before proceeding with the calibration. When the sample is determined to be leak-free, turn off the sampler and unblock the orifice. Now remove the rubber stopper or plug from the calibrator orifice.

11.2.2.6 Turn the flow control valve to the fully open position and turn the sampler on. Adjust the flow control valve until a Magnehelic reading of approximately 70 in. is obtained. Allow the Magnehelic and manometer readings to stabilize and record these values on the orifice transfer Field Calibration Data Sheet (see Figure 10).

11.2.2.7 Record the manometer reading under Y1 and the Magnehelic reading under Y2 on the Field Calibration Data Sheet. For the first reading, the Magnehelic should still be at 70 inches as set above.

11.2.2.8 Set the Magnehelic to 60 inches by using the sampler's flow control valve. Record the manometer (Y1) and Magnehelic (Y2) readings on the Field Calibration Data Sheet (see Figure 10).

11.2.2.9 Repeat the above steps using Magnehelic settings of 50, 40, 30, 20, and 10 inches.

11.2.2.10 Turn the voltage variator to maximum power, open the flow control valve, and confirm that the Magnehelic reads at least 100 inches. Turn off the sampler and confirm that the Magnehelic reads zero.

11.2.2.11 Read and record the following parameters on the Field Calibration Data Sheet. Record the following on the calibration data sheet:

- Data, job number, and operator's signature.
- Sampler serial number.
- Ambient barometric pressure.
- Ambient temperature.

11.2.2.12 Remove the "dummy" cartridge and replace with a sample cartridge.

11.2.2.13 Obtain the manufacturer high volume orifice calibration certificate.

11.2.2.14 If not performed by the manufacturer, calculate values for each calibrator orifice static pressure (Column 6, inches of water) on the manufacturer's calibration certificate using the following equation:

$$\sqrt{\Delta H(P_a/760)[298/(T_a + 273)]}$$

where:

P_a = the barometric pressure (mm Hg) at time of manufacturer calibration, mm Hg
T_a = temperature at time of calibration, °C

11.2.2.15 Perform a linear regression analysis using the values in Column 7 of the manufacturer's High Volume Orifice Calibration Certificate for flow rate (Q_{std}) as the "X" values and the calculated values as the Y

values. From this relationship, determine the correlation (CC1), intercept (B1), and slope (M1) for the Orifice Transfer Standard.

11.2.2.16 Record these values on the Field Calibration Data Sheet (see Figure 10).

11.2.2.17 Using the Field Calibration Data Sheet values (see Figure 10), calculate the Orifice Manometer Calculated Values (Y3) for each orifice manometer reading using the following equation:

Y3 Calculation

$$Y3 = \{Y1(P_a/760)[298/(T_a + 273)]\}^{1/2}$$

11.2.2.18 Record the values obtained in Column Y3 on the Field Calibration Data Sheet (see Figure 10).

11.2.2.19 Calculate the Sampler Magnehelic Calculated Value (Y4) using the following equation:

Y4 Calculation

$$Y4 = \{Y2(P_a/760)[298/(T_a + 273)]\}^{1/2}$$

11.2.2.20 Record the value obtained in Column Y4 on the Field Calibration Data Sheet (see Figure 10).

11.2.2.21 Calculate the Orifice Flow Rate (X1) in scm using the following equation:

X1 Calculation

$$X1 = \frac{Y3 - B1}{M1}$$

11.2.2.22 Record the values obtained in Column X1 on the Field Calibration Data Sheet (see Figure 10).

11.2.2.23 Perform a linear regression of the values in Column X1 (as X) and the values in Column Y4 (as Y). Record the relationship for correlation (CC2), intercept (B2), and slope (M2) on the Field Calibration Data Sheet. The correlation coefficient must be 0.990 or greater.

11.2.2.24 Using the following equation, calculate a set point (SP) for the manometer to represent a desired flow rate:

Set Point

$$\text{Set point (SP)} = [(\text{Expected } P_a)/(\text{Expected } T_a)(T_{std}/P_{std})][M2\ (\text{Desired flow rate}) + B2]^2$$

where:

P_a = Expected atmospheric pressure (P_a), mm Hg
T_a = Expected atmospheric temperature (T_a), 273 + °C
M2 = Slope of developed relationship
B2 = Intercept of developed relationship
T_{std} = Temperature standard, 273 + 25°C
P_{std} = Pressure standard, 760 mm Hg

11.2.2.25 During monitoring, calculate a flow rate from the observed Magnehelic reading using the following equations:

Flow Rate

$$Y5 = [\text{Average Magnehelic Reading } (\Delta H)\ (P_a/T_a)(T_{std}/P_{std})]^{1/2}$$

$$X2 = \frac{Y5 - B2}{M2}$$

where:

Y5 = Corrected average magnehelic reading
X2 = Instant calculated flow rate, scm

11.2.2.26 The relationship in calibration of a sampling system between Orifice Transfer Standard and flow rate through the sampler is illustrated in Figure 11.

11.2.3 Single-Point Audit of the High Volume Sampling System Utilizing Calibrated Orifice Transfer Standard

Single point calibration checks are required as follows:

- Prior to the start of each 24-hour test period.
- After each 24-hour test period. The post-test calibration check may serve as the pre-test calibration check for the next sampling period if the sampler is not moved.
- Prior to sampling after a sample is moved.

For samplers, perform a calibration check for the operational flow rate before each 24-hour sampling event and when required as outlined in the user quality assurance program. The purpose of this check is to track the sampler's calibration stability. Maintain a control chart presenting the percentage difference between a sampler's indicated and measured flow rates. This chart provides a quick reference of sampler flow-rate drift problems and is useful for tracking the performance of the sampler. Either the sampler log book or a data sheet will be used to document flow-check information. This information includes, but is not limited to, sampler and orifice transfer standard serial number, ambient temperature, pressure conditions, and collected flow-check data.

In this subsection, the following is assumed:

- The flow rate through a sampler is indicated by the orifice differential pressure;
- Samplers are designed to operate at an actual flow rate of 8 scfm, with a maximum acceptable flow-rate fluctuation range of ±10 percent of this value;
- The transfer standard will be an orifice device equipped with a pressure tap. The pressure is measured using a manometer; and
- The orifice transfer standard's calibration relationship is in terms of standard volumetric flow rate (Q_{std}).

11.2.3.1 Perform a single point flow audit check before and after each sampling period utilizing the Calibrated Orifice Transfer Standard (see Section 11.2.1).

11.2.3.2 Prior to single point audit, place a "dummy" glass cartridge in the sampling head and activate the sampling motor. Fully open the flow control valve and adjust the voltage variator so that a sample flow rate corresponding to 110 percent of the desired flow rate (typically 0.19 to 0.28 m^3/min) is indicated on the Magnehelic gauge (based on the previously obtained multipoint calibration curve). Allow the motor to warm up for 10 minutes and then adjust the flow control valve to achieve the desired flow rate. Turn off the sampler. Record the ambient temperature and barometric pressure on the Field Test Data Sheet (see Figure 12).

11.2.3.3 Place the flow rate transfer standard on the sampling head.

11.2.3.4 Properly align the retaining rings with the filter holder and secure by tightening the three screw clamps. Connect the flow rate transfer standard to the manometer using a length of tubing.

11.2.3.5 Using tubing, attach one manometer connector to the pressure tap of the transfer standard. Leave the other connector open to the atmosphere.

11.2.3.6 Adjust the manometer midpoint by sliding the movable scale until the zero point corresponds with the water meniscus. Gently shake or tap to remove any air bubbles and/or liquid remaining on tubing connectors. (If additional liquid is required, remove tubing connector and add clean water.)

11.2.3.7 Turn on the high-volume motor and let run for 5 minutes.

11.2.3.8 Record the pressure differential indicated, ΔH, in inches of water, on the Field Test Data Sheet. Be sure a stable ΔH has been established.

11.2.3.9 Record the observed Magnehelic gauge reading in inches of water on the Field Test Data Sheet. Be sure stable ΔM has been established.

11.2.3.10 Using previous established Orifice Transfer Standard curve, calculate Q_{sr} (see Section 11.2.2.23).

11.2.3.11 This flow should be within ±10 percent of the sampler set point, normally, 0.224 m^3. If not, perform a new multipoint calibration of the sampler.

11.2.3.12 Remove flow rate transfer standard and dummy sorbent cartridge.

11.3 Sample Collection

11.3.1 General Requirements

11.3.1.1 The sampler should be located in an unobstructed area, at least 2 meters from any obstacle to air flow. The exhaust hose should be stretched out in the downwind direction to prevent recycling of air into the sample head.

11.3.1.2 All cleaning and sample module loading and unloading should be conducted in a controlled environment, to minimize any chance of potential contamination.

11.3.1.3 When new or when using the sampler at a different location, all sample contact areas need to be cleaned. Use triple rinses of reagent grade hexane or methylene chloride contained in Teflon® rinse bottles. Allow the solvents to evaporate before loading the PUF modules.

11.3.2 Preparing Cartridge for Sampling

11.3.2.1 Detach the lower chamber of the cleaned sample head. While wearing disposable, clean, lint-free nylon, or cotton gloves, remove a clean glass sorbent module from its shipping container. Remove the Teflon® end caps (if applicable). Replace the end caps in the sample container to be reused after the sample has been collected.

11.3.2.2 Insert the glass module into the lower chamber and tightly reattach the lower chambers to the module.

11.3.2.3 Using clean rinsed (with hexane) Teflon®-tipped forceps, carefully place a clean conditioned fiber filter atop the filter holder and secure in place by clamping the filter holder ring over the filter. Place the

aluminum protective cover on top of the cartridge head. Tighten the 3 screw clamps. Ensure that all module connections are tightly assembled. Place a small piece of aluminum foil on the ball-joint of the sample cartridge to protect from back-diffusion of semi-volatiles into the cartridge during transporting to the site.

[Note: Failure to do so could expose the cartridge to contamination during transport.]

11.3.2.4 Place the cartridge in a carrying bag to take to the sampler.

11.3.3 Collection

11.3.3.1 After the sampling system has been assembled, perform a single point flow check as described in Sections 11.2.3.

11.3.3.2 With the empty sample module removed from the sampler, rinse all sample contact areas using reagent grade hexane in a Teflon® squeeze bottle. Allow the hexane to evaporate from the module before loading the samples.

11.3.3.3 With the sample cartridge removed from the sampler and the flow control valve fully open, turn the pump on and allow it to warm-up for approximately 5 minutes.

11.3.3.4 Attach a "dummy" sampling cartridge loaded with the exact same type of filter and PUF media to be used for sample collection.

11.3.3.5 Turn the sampler on and adjust the flow control valve to the desired flow as indicated by the Magnehelic gauge reading determined in Section 11.2.2.24. Once the flow is properly adjusted, take extreme care not to inadvertently alter its setting.

11.3.3.6 Turn the sampler off and remove the "dummy" module. The sampler is now ready for field use.

11.3.3.7 Check the zero reading of the sampler Magnehelic. Record the ambient temperature, barometric pressure, elapsed time meter setting, sampler serial number, filter number, and PUF cartridge number on the Field Test Data Sheet (see Figure 12). Attach the loaded sampler cartridge assembly to the sampler.

11.3.3.8 Place the voltage variator and flow control valve at the settings used in Section 11.3.2, and the power switch. Activate the elapsed time meter and record the start time. Adjust the flow (Magnehelic setting), if necessary, using the flow control valve.

11.3.3.9 Record the Magnehelic reading every 6 hours during the sampling period. Use the calibration factors (see Section 11.2.2.24) to calculate the desired flow rate. Record the ambient temperature, barometric pressure, and Magnehelic reading at the beginning and during sampling period.

11.3.4 Sample Recovery

11.3.4.1 At the end of the desired sampling period, turn the power off. Carefully remove the sampling head containing the filter and sorbent cartridge. Place the protective "plate" over the filter to protect the cartridge during transport to a clean recovery area. Also, place a piece of aluminum foil around the bottom of the sampler cartridge assembly.

11.3.4.2 Perform a final calculated sampler flow check using the calibration orifice, assembly, as described in Section 11.3.2. If calibration deviates by more than 10 percent from initial reading, mark the flow data for that sample as suspect and inspect and/or remove from service, record results on Field Test Data Sheet, Figure 12.

11.3.4.3 Transport the sampler cartridge assembly to a clean recovery area.

11.3.4.4 While wearing white cotton gloves, remove the PUF glass cartridge from the lower module chamber and lay it on the retained aluminum foil in which the sample was originally wrapped.

11.3.4.5 Carefully remove the quartz fiber filter from the upper chamber using clean Teflon®-tipped forceps.

11.3.4.6 Fold the filter in half twice (sample side inward) and place it in the glass cartridge atop the PUF.

11.3.4.7 Wrap the combined samples in the original hexane-rinsed aluminum foil, attach Teflon® end caps (if applicable) and place them in their *original* aluminum shipping container. Complete a sample label and affix it to the aluminum shipping container.

11.3.4.8 Chain-of-custody should be maintained for all samples. Store the containers under blue ice or dry ice and protect from UV light to prevent possibly photo-decomposition of collected analytes. If the time span between sample collection and laboratory analysis is to exceed 24 hours, refrigerate sample at 4°C.

11.3.4.9 Return at least one field blank filter/PUF cartridge to the laboratory with each group of samples. Treat a field blank exactly as the sample except that air is not drawn through the filter/sorbent cartridge assembly.

11.3.4.10 Ship and store field samples chilled (<4°C) using blue ice until receipt at the analytical laboratory, after which samples should be refrigerated at less than or equal to 4°C for up to 7 days prior to extraction; extracts should be analyzed within 40 days of extraction.

12. Sample Extraction, Concentration, and Cleanup

[Note: The following sample extraction, concentration, solvent exchange and analysis procedures are outlined for user convenience in Figure 13.]

12.1 Sample Identification

12.1.1 The chilled (<4°C) samples are returned in the aluminum shipping container (containing the filter and sorbents) to the laboratory for analysis. The "chain-of-custody" should be completed.

12.1.2 The samples are logged in the laboratory logbook according to sample location, filter and sorbent cartridge number identification, and total air volume sampled (uncorrected).

12.1.3 If the time span between sample registration and analysis is greater than 24-hours, then the sample must be kept refrigerated at <4°C. Minimize exposure of samples to fluorescent light. All samples should be extracted within one week (7 days) after sampling.

12.2 Soxhlet Extraction and Concentration

[Note: If PUF is the sorbent, the extraction solvent is 10 percent diethyl ether in hexane. If XAD-2® resin is the sorbent, the extraction solvent is methylene chloride.]

12.2.1 Assemble the Soxhlet apparatus (see Figure 4a). Immediately before use, charge the Soxhlet apparatus with 700 to 750 mL of 10 percent diethyl ether in hexane and reflux for 2 hours. Let the apparatus cool, disassemble it, transfer the diethyl ether in hexane to a clean glass container, and retain it as a blank for later analysis, if required. Place the sorbent and filter together in the Soxhlet apparatus (the use of an extraction thimble is optional).

[Note: The filter and sorbent are analyzed together in order to reach detection limits, avoid questionable interpretation of the data, and minimize cost.]

12.2.1.1 Prior to extraction, add appropriate laboratory surrogate standards to the Soxhlet solvent. A surrogate standard (i.e., a chemically compound not expected to occur in an environmental sample) should be added to each sample, blank, and matrix spike sample just prior to extraction or processing. The recovery of the laboratory surrogate standard is used to monitor for unusual matrix effects, gross sample processing errors, etc. Surrogate recovery is evaluated for acceptance by determining whether the measure concentration falls within the acceptance limits. Spike 20 μL of a 50 μg/mL solution of the surrogates onto the PUF cartridge, prior to Soxhlet extraction, to yield a final concentration of 1 μg. The following laboratory surrogate standards have been

successfully utilized in determining Soxhlet extraction effects, sample process errors, etc., for GC/MS/DS analysis.

Laboratory Surrogate Standard	Total Spiked Amount (µg)
D_{10}-Fluorene	1
D_{10}-Pyrene	1

Section 13.2 outlines preparation of the laboratory surrogates. Add the laboratory surrogate compounds to the PUF cartridge. Add 700 mL of 10 percent diethyl ether in hexane to the apparatus and reflux for 18 hours at a rate of at least 3 cycles per hour. Allow to cool, then disassemble the apparatus.

12.2.1.2 Dry the extract from the Soxhlet extraction by passing it though a drying column containing about 10 grams of anhydrous sodium sulfate. Collect the dried extract in a K-D concentrator assembly. Wash the extractor flask and sodium sulfate column with 100-125 mL of 10 percent diethyl ether/hexane to complete the quantitative transfer.

12.2.2 Assemble a K-D concentrator (see Figure 4b) by attaching a 10 mL concentrator tube to a 500 mL evaporative flask.

[Note: Other concentration devices (vortex evaporator) or techniques may be used in place of the K-D as long as qualitative and quantitative recovery can be demonstrated.]

12.2.2.1 Add two boiling chips, attach a three-ball macro-Snyder column to the K-D flask, and concentrate the extract using a water bath at 60 to 65°C. Place the K-D apparatus in the water bath so that the concentrator tube is about half immersed in the water and the entire rounded surface of the flask is bathed with water vapor. Adjust the vertical position of the apparatus and the water temperature as required to complete the concentration in one hour. At the proper rate of distillation, the balls of the column actively chatter but the chambers do not flood. When the liquid has reached an approximate volume of 5 mL, remove the K-D apparatus from the water bath and allow the solvent to drain for at least 5 minutes while cooling.

12.2.2.2 Remove the Snyder column and rinse the flask and its lower joint into the concentrator tube with 5 mL of cyclohexane. A 5 mL syringe is recommended for this operation. The extract is now ready for further concentration to 1.0 mL by nitrogen blowdown.

12.2.2.3 Place the 1 mL calibrated K-D concentrator tube with an open micro-Snyder attachment in a warm water bath (30 to 3 5°C) and evaporate the solvent volume to just below 1 mL by blowing a gentle stream of clean, dry nitrogen (filtered through a column of activated carbon) above the extract.

12.2.2.4 The internal wall of the concentrator tube must be rinsed down several times with hexane during the operation.

12.2.2.5 During evaporation, the tube solvent level must be kept below the water level of the bath. the extract must never be allowed to become dry.

12.2.2.6 Bring the final volume back to 1.0 mL with hexane. Transfer the extract to a Teflon®-sealed screw-cap amber vial, label the vial, and store at 4°C (±2°C).

[Note: It is not necessary to bring the volume to exactly 1.0 mL if the extract will be cleaned up by solid phase extraction cleanup methods. Final volume is brought to 1.0 mL after cleanup.]

12.3 Sample Cleanup

12.3.1 If the extract is cloudy, impurities may be removed from the extract by solid phase extraction using activated silica gel. Clean-up procedures may not be needed for relatively clean matrix samples.

12.3.2 Approximately 10 grams of silica gel, type 60 (70-230 mesh), are extracted in a Soxhlet extractor with 10 percent diethyl ether for 6 hours (minimum rate, 3 cycles/hr) and then activated by heating in a foil-covered glass container for 16 hours at 150°C.

12.3.3 Using a disposable Pasteur pipette (7.5-mm x 14.6-cm), place a small piece of glass wool in the neck of the pipette. Prepare a slurry of activated silica gel in 10 percent diethyl ether. Place 10 grams of the activated silica gel slurry into the column using additional 10 percent diethyl ether. Finally, 1 gram of anhydrous sodium sulfate is added to the top of the silica gel. Prior to use, the column is rinsed with 10 percent diethyl ether at 1 mL/min for 1 hour to remove any trace of contaminants. It is then pre-eluted with 40 mL of pentane and the eluate discarded.

12.3.4 While the pentane pre-elutant covers the top of the column, 1 mL of the sample extract is transferred to the column, and washed on with 2 mL of *n*-hexane to complete the transfer. Allow to elute through the column. Immediately prior to exposure of the sodium sulfate layer the air, add 25 mL of pentane and continue the elution process. The pentane eluate is discarded.

12.3.5 The column is finally eluted at 2 mL/min with 25 mL of 10 percent diethyl ether in pentane (4:6 v/v) and collected in a 50 mL K-D flask equipped with a 5 mL concentrator tube for concentration to less than 5 mL. The concentrate is further concentrated to 1.0 mL under a gentle stream of nitrogen as previously described.

12.3.6 The extract is now ready for GC/MS analysis. Spike the extract with internal standards (ISs) before analysis. The following internal standards (ISs) have been successfully used in PAH analysis by GC/MS.

Internal Standard (IS)	Total Spiked Amount (µg)
D_8-Naphthalene	0.5
D_{10}-Acenaphthene	0.5
D_{10}-Phenanthrene	0.5
D_{12}-Chrysene	0.5
D_{12}-Perylene	0.5

Section 13.2 outlines preparation of the ISs.

13. Gas Chromatography with Mass Spectrometry Detection

13.1 General

13.1.1 The analysis of the extracted sample for benzo[a]pyrene and other PAHs is accomplished by an electron ionization gas chromatograph/mass spectrometer (EI GC/MS) in the mode with a total cycle time (including voltage reset time) of 1 second or less. The GC is equipped with an DB-5 fused silica capillary column (30-m x 0.32-mm I.D.) with the helium carrier gas for analyte separation. The GC column is temperature controlled and interfaced directly to the MS ion source.

13.1.2 The laboratory must document that the EI GC/MS system is properly maintained through periodic calibration checks. The GC/MS system should be operated in accordance with specifications outlined in Table 2.

13.1.3 The GC/MS is tuned using a 50 ng/µL solution of decafluorotriphenylphosphine (DFTPP). The DFTPP permits the user to tune the mass spectrometer on a daily basis. If properly tuned, the DFTPP key ions and ion abundance criteria should be met as outlined in Table 3.

13.1.4 The GC/MS operating conditions are outlined in Table 2. The GC/MS system should be calibrated using the internal standard technique. Figure 14 outlines the following sequence involving the GC/MS calibration.

13.2 Calibration of GC/MS/DS

13.2.1 Standard Preparation

Stock PAH Standards Including Surrogate Compounds

13.2.1.1 Prepare stock standards of B[a]P and other PAHs. The stock standard solution of B[a]P (2.0 µg/µL) and other PAHs can be user prepared from pure standard materials or can be purchased commercially.

13.2.1.2 Place 0.2000 grams of native B[a]P and other PAHs on a tared aluminum weighing disk and weigh on a Mettler balance.

13.2.1.3 Quantitatively transfer the material to a 100 mL volumetric flask. Rinse the weighing disk with several small portions of 10 percent diethyl ether/hexane. Ensure all material has been transferred.

13.2.1.4 Dilute to mark with 10 percent diethyl ether/hexane.

13.2.1.5 The concentration of the stock standard solution of B[a]P or other PAHs in the flask is 2.0 µg/µL.

[Note: Commercially prepared stock PAH standards may be used at any concentration if they are certified by the manufacturer or by an independent source.]

13.2.1.6 Transfer the stock standard solutions into Teflon®-sealed screw-cap bottles. Store at 4°C and protect from light. Stock standard solutions should be checked frequently for signs of degradation or evaporation, especially just prior to preparing calibration standards from them.

13.2.1.7 Stock PAH standard solutions must be replaced after 1 year or sooner if comparison with quality control check samples indicates a problem.

Mix Internal Standard (IS) Solution

13.2.1.8 For PAH analysis, deuterated internal standards are selected that are similar in analytical behavior to the compound of interest. The following internal standards are suggested for PAH analysis:

D_{12}-Perylene
Benzo(e)pyrene
Benzo(a)pyrene
Benzo(k)fluoranthene

D_{10}-Acenaphthene
Acenaphthene (if using XAD-2® as the sorbent)
Acenaphthylene (if using XAD-2® as the sorbent)
Fluorene
Benzo(g,h,i)perylene
Dibenz(a,h)anthracene
Indeno(1,2,3-cd)pyrene
Perylene
Benzo(b)fluoranthene
Coronene

D_{12}-Chrysene
Benz(a)anthracene
Chrysene
Pyrene

D_8-Naphthalene
Naphthalene (if using XAD-2® as the sorbent)

D_{10}-Phenanthrene
Anthracene
Fluoranthene
Phenanthrene

13.2.1.9 Purchase a mix IS solution containing specific IS needed for quantitation at a concentration of 2,000 ng/µL.

Mixed Stock PAH Standard Including Surrogate Compounds

13.2.1.10 Prepare a mixed stock PAH standard by taking 125 µL of the stock PAH standard(s) and diluting to mark with hexane in a 10-mL volumetric flask. The concentration of the mixed stock PAH standard(s) is 25 ng/µL.

Calibration PAH Standards Including Surrogate Compounds

13.2.1.11 Calibration PAH standards can be generated from the stock PAH standard using serial dilution utilizing the following equation:

$$C_1V_1 = C_2V_2$$

where:

C_1 = Concentration of stock PAH standards, ng/µL
V_1 = Volume of stock PAH standard solution taken to make calibration PAH standards, µL
V_2 = Final volume diluted to generate calibration PAH standards, µL
C_2 = Final concentration of calibration PAH standards, ng/µL

13.2.1.12 Using the above equation, prepare a series of calibration PAH standards which include the surrogate compounds (i.e., 2.50 ng/µL, 1.25 ng/µL, 0.50 ng/µL, 0.25 ng/µL, and 0.10 ng/µL) according to the scheme illustrated in Table 4 and described below.

- For CAL 5, transfer 1.00 mL of the mixed PAH stock standard in a 10-mL volumetric flask and dilute to 10.0 mL with hexane. The resulting concentration is 2.5 ng/µL for the PAH analytes.
- To prepare CAL 4, transfer 500 µL of the mixed PAH stock standard solution to a 10-mL volumetric flask and dilute to 10.0 mL with hexane. The resulting concentration is 1.25 ng/µL for PAH analytes.
- To prepare CAL 3, transfer 200 µL of the mixed PAH stock solution to a 10-mL volumetric flask and dilute to 10-mL with hexane. The resulting concentration is 0.50 ng/µL for PAH analytes.
- To prepare CAL 2, transfer 100 µL of the mixed PAH stock solution to a 10-mL volumetric flask and dilute to 10-mL with hexane. The resulting concentration is 0.25 ng/µL for PAH analytes.
- To prepare CAL 1, transfer 40 µL of the mixed PAH stock solution to a 10-mL volumetric flask and dilute to 10-mL with hexane. The resulting concentration is 0.10 ng/µL for PAH analytes.

13.2.2 Internal Standard Spiking

13.2.2.1 Prior to GC/MS analysis, each 1 mL aliquot of the five calibration standards is spiked with internal standard to a final concentration of 0.5 ng/µL. To do this, first prepare a 1:40 dilution of the 2,000 ng/µL mixed internal standard solution by diluting 250 µL to a volume of 10 mL to yield a concentration of 50 ng/µL.

13.2.2.2 Each 1.0-mL portion of calibration standard and sample extract is then spiked with 10 µL of the internal standard solution prior to analysis by GC/MS/DS operated in the SCAN mode.

13.2.3 Storage, Handling, and Retention of Standards

13.2.3.1 Store the stock and mixed standard solutions at 4°C (±2°C) in Teflon®-lined screw-cap amber bottles. Store the working standard solutions at 4°C (±2°C) in Teflon®-lined screw-cap amber bottles.

13.2.3.2 Protect all standards from light. Samples, sample extracts, and standards must be stored separately.

13.2.3.3 Stock standard solutions must be replaced every 12 months, or sooner, if comparison with quality control check samples indicates a problem. Diluted working standards are usable for 6 months. Analysis difficulties, which warrant investigation, may require preparation of new standards. All standards are securely stored at ~4°C (±2°C) but above freezing. The concentration, preparation and expiration date, and solvent are identified on standard vial labels. Each standard is uniquely identified with its laboratory notebook number and a prefix. This procedure helps provide traceability to standard preparation.

13.2.3.4 Take care to maintain the integrity of each standard. The solvent, hexane, is volatile and can easily evaporate. Make sure each vial is sealed after use, and mark the solvent level on the side of the vial. When retrieving a vial for use, if the solvent level does not match the mark, dispose of the standard and obtain a new one.

13.3 GC/MS Instrument Operating Conditions

13.3.1 **Gas Chromatograph (GC).** The following are the recommended GC analytical conditions, as also outlined in Table 3, to optimize conditions for compound separation and sensitivity.

Carrier Gas:	Helium
Linear Velocity:	28-29 cm^3/sec
Injector Temperature:	250-300°C
Injector:	Grob-type, splitless, 2 µL
Temperature Program:	Initial Temperature: 70°C
Initial Hold Time:	4.0 ± 0.1 min.
Ramp Rate:	10°C/min to 300°C, hold for 10 min
Final Temperature:	300°C
Final Hold Time:	10 min (or until all compounds of interest have eluted).
Analytical Time:	Approximately 50 min.

13.3.2 Mass Spectrometer. Following are the required mass spectrometer conditions for scan data acquisition:

Transfer Line Temperature:	290°C
Source Temperature:	According to manufacturer's specifications
Electron Energy:	70 volts (nominal)
Ionization Mode:	EI
Mass Range:	35 to 500 amu, SCAN data acquisition
Scan Time:	At least 5 scans per peak, not to exceed 1 second per scan

13.3.3 Instrument Performance Check for GC/MS.

13.3.3.1 **Summary.** It is necessary to establish that the GC/MS meet tuning and standard mass spectral abundance criteria prior to initiating any on-going data collection, as illustrated in Figure 14. This is accomplished through the analysis of decafluorotriphenylphosphine (DFTPP).

13.3.3.2 **Frequency.** The instrument performance check solution of DFTPP will be analyzed initially and once per 12-hour time period of operation. Also, whenever the laboratory takes corrective action which may change or affect the mass spectral criteria (e.g., ion source cleaning or repair, column replacement, etc.), the instrument performance check must be verified irrespective of the 12-hour laboratory requirement. The 12-hour

time period for GC/MS analysis begins at the injection of the DFTPP, which the laboratory submits as documentation of a compliance tune. The time period ends after 12 hours have elapsed. To meet instrument performance check requirements, samples, blanks, and standards must be injected within 12 hours of the DFTPP injection.

13.3.3.3 Procedure. Inject 50 ng of DFTPP into the GC/MS system. DFTPP may be analyzed separately or as part of the calibration standard.

13.3.3.4 Technical Acceptance Criteria. The following criteria have been established in order to generate accurate data:

- Prior to the analysis of any samples, blanks, or calibration standards, the laboratory must establish that the GC/MS system meets the mass spectral ion abundance criteria for the instrument performance check solution containing DFTPP.
- The GC/MS system must be tuned to meet the manufacturer's specifications, using a suitable calibrant. The mass calibration and resolution of the GC/MS system are verified by the analysis of the instrument performance check solution.
- The abundance criteria listed in Table 3 must be met for a 50 ng injection of DFTPP. The mass spectrum of DFTPP must be acquired by averaging three scans (the peak apex scan and the scans immediately preceding and following the apex). Background subtraction is required, and must be accomplished using a single scan prior to the elution of DFTPP.

[Note: All ion abundance MUST be normalized to m/z 198, the nominal base peak, even though the ion abundances of m/z 442 may be up to 110 percent of m/z 198.]

- The above criteria are based on adherence to the acquisition specifications identified in Table 4 and were developed for the specific target compound list associated with this document. The criteria are based on performance characteristics of instruments currently utilized in routine support of ambient air program activities. These specifications, in conjunction with relative response factor criteria for target analytes, are designed to control and monitor instrument performance associated with the requirements if this document. As they are performance-based criteria for these specific analytical requirements, they may not be optimal for additional target compounds.
- If the mass spectrometer has the ability for autotuning, then the user may utilize this function following manufacturer's specifications. Autotune automatically adjusts ion source parameters within the detector using FC-43 (Heptacos). Mass peaks at m/z 69, 219, and 502 are used for tuning. After the tuning is completed, the FC-43 abundances at m/z 50, 69, 131, 219, 414, 502, and 614 are further adjusted such that their relative intensities match the selected masses of DFTPP.

13.3.3.5 Corrective Action. If the DFTPP acceptance criteria are not met, the MS must be retuned. It may be necessary to clean the ion source, or quadrupoles, or take other actions to achieve the acceptance criteria. DFTPP acceptance criteria MUST be met before any standards, or required blanks, are analyzed. Any standards, field samples, or required blanks analyzed when tuning criteria have not been met will require reanalysis.

13.3.4 Initial Calibration for GC/MS.

13.3.4.1 Summary. Prior to the analysis of samples and required blanks, and after tuning criteria (instrument performance check) have been met, each GC/MS system will be initially calibrated at a minimum of five concentrations to determine instrument sensitivity and the linearity of GC/MS response for the analyte compounds and the surrogates.

13.3.4.2 Frequency. Each GC/MS system must be initially calibrated whenever the laboratory takes corrective action, which may change or affect the initial calibration criteria (e.g., ion source cleaning or repair,

column replacement, etc.), or if the continuing calibration acceptance criteria have not been met. If time still remains in the 12-hour time period after meeting the technical acceptance criteria for the initial calibration, samples may be analyzed. It is not necessary to analyze a continuing calibration standard within the 12-hour time period if the initial calibration standard (CAL 3) is the same concentration as the continuing calibration standard and both meet the continuing calibration technical acceptance criteria. Quantify all sample results using the mean of the relative response factors ($\overline{RRFs}$) from the initial calibration.

13.3.4.3 Procedure. Perform the following activities to generate quantitative data:

- Set up the GC/MS system.
- Warm all standard/spiking solutions, sample extracts, and blanks to ambient temperature (~1 hour) before analysis.
- Tune the GC/MS system to meet the technical acceptance criteria (see Section 13.3.3).
- Prepare five calibration standards containing the target compounds, internal standards, and surrogate compounds at the concentrations outlined in Table 4.
- Calibrate the GC/MS by injecting 2.0 µL of each standard. If a compound saturates when the CAL 5 standard is injected, and the system is calibrated to achieve a detection sensitivity of no less than the MDL for each compound, the laboratory must document it and attach a quantitation report and chromatogram. In this instance, the laboratory must calculate the results based on a four-point initial calibration for the *specific compound* that saturates. Secondary ion quantitation is only allowed when there are sample interferences with the primary quantitation ion. If secondary ion quantitation is used, calculate a relative response factor using the area response from the most intense secondary ion which is free of interferences and document the reasons for the use of the secondary ion.
- Record a mass spectrum of each target compound. Figure 15(a) through 15(q) documents the mass spectrum for each of the 16 target PAHs discussed in Compendium Method TO-13A. Judge the acceptability of recorded spectra by comparing them to spectra in libraries. If an acceptable spectrum of a calibration standard component is not acquired, take necessary actions to correct GC/MS performance. If performance cannot be corrected, report sample extract data for the particular compound(s), but document the affected compound(s) and the nature of the problem.

13.3.4.4 Calculations. Perform the following calculations to generate quantitative data:

[Note: In the following calculations, the area response is that of the primary quantitation ion unless otherwise stated.]

- **Relative Response Factors (RRFs).** Calculate RRFs for each analyte target compound and surrogate using the following equation with the appropriate internal standard. Table 5 outlines characteristic ions for the surrogate compounds and internal standards. Table 6 outlines primary quantitation ions for each PAH. Use the following equation for RRF calculation.

$$RRF = \frac{A_x C_{is}}{A_{is} C_x}$$

where:

A_x = area of the primary quantitation ion for the compound to be measured, counts
A_{is} = area of the primary quantitation ion for the internal standard, counts
C_{is} = concentration or amount of the internal standard, ng/µL

C_x = concentration or amount of the compound to be measured, ng/µL

- **Percent Relative Standard Deviation (%RSD).** Using the RRFs from the initial calibration, calculate the %RSD for all target compounds and surrogates using the following equations:

$$\%RSD = \frac{SD_{RRF}}{\bar{x}} \times 100$$

and

$$SD_{RRF} = \sqrt{\sum_{i=1}^{N} \frac{(x_i - \bar{x})^2}{N - 1}}$$

where:
SD_{RRF} = standard deviation of initial response factors (per compound)
x = mean of initial relative response factors (per compound)
X_i = ith RRF
N = number of determinations

- **Relative Retention Times (RRT).** Calculate the RRTs for each target compound and surrogate over the initial calibration range using the following equation:

$$RRT = \frac{RT_c}{RT_{is}}$$

where:
RT_c = retention time of the target compound, minutes
RT_{is} = retention time of the internal standard, minutes

- **Mean of the Relative Retention Times ($\overline{RRT}$).** Calculate the mean of the relative retention times ($\overline{RRT}$) for each analyte target compound and surrogate over the initial calibration range using the following equation:

$$\overline{RRT} = \sum_{i=1}^{n} \frac{RRT_i}{n}$$

where:
$\overline{RRT}$ = mean relative retention time for the target compound or surrogate for each initial calibration standard, minutes
RRT = relative retention time for the target compound or surrogate for each initial calibration standard, minutes

- **Mean Area Response ($\overline{Y}$) for Internal Standard.** Calculate the area response (Y) mean for primary quantitation ion each internal standard compound over the initial calibration range using the following equation:

$$\overline{Y} = \sum_{i=1}^{n} \frac{Y_i}{n}$$

where:

$\overline{Y}$ = mean area response, counts
Y_i = area response for the primary quantitation ion for the internal standard for each calibration standard, counts

- **Mean of the Retention Time ($\overline{RT}$) For Internal Standard.** Calculate the mean of the retention times ($\overline{RT}$) for each internal standard over the initial calibration range using the following equation:

$$\overline{RT} = \sum_{i=1}^{n} \frac{RT_i}{n}$$

where:
$\overline{RT}$ = mean retention time, minutes
RT = retention time for the internal standard for each initial calibration standard, minutes

13.3.4.5 Technical Acceptance Criteria. All initial calibration standards must be analyzed at the concentration levels at the frequency described in Section 13.3.3 on a GC/MS system meeting the DFTPP instrument performance check criteria.

- The relative response factor (RRF) at each calibration concentration for each target compound and surrogate that has a required minimum response factor value must be greater than or equal to the minimum acceptable relative response factor (see Table 7) of the compound.
- The percent relative standard deviation (%RSD) over the initial calibration range for each target compound and surrogate that has a required maximum %RSD must be less than or equal to the required maximum value (see Table 7). For all the other target compounds, the value for %RSD must be less than or equal to 30 percent. When the value for %RSD exceeds 30 percent, analyze additional aliquots of appropriate CALs to obtain an acceptable %RSD of RRFs over the entire concentration range, or take action to improve GC/MS performance.
- The relative retention time for each of the target compounds and surrogates at each calibration level must be within ±0.06 relative retention time units of the mean relative retention time for the compound.
- The retention time shift for each of the internal standards at each calibration level must be within ±20.0 seconds compared to the mean retention time ($\overline{RT}$) over the initial calibration range for each internal standard.
- The compounds must meet the minimum RRF and maximum %RSD criteria for the initial calibration.

13.3.4.6 Corrective Action. If the technical acceptance criteria for initial calibration are not met, the system should be inspected for problems. It may be necessary to clean the ion source, change the column, or take other corrective actions to achieve the acceptance criteria. Initial calibration technical acceptance criteria MUST

be met before any samples or required blanks are analyzed in a 12-hour time period for an initial calibration analytical sequence.

13.3.5 Continuing Calibration.

13.3.5.1 Summary. Prior to the analysis of samples and required blanks and after tuning criteria have been met, the initial calibration of each GC/MS system must be routinely checked by analyzing a continuing calibration standard (see Table 4, CAL 3) to ensure that the instrument continues to meet the instrument sensitivity and linearity requirements of the method. The continuing calibration standard (CAL 3) shall contain the appropriate target compounds, surrogates, and internal standards.

13.3.5.2 Frequency. Each GC/MS used for analysis must be calibrated once every time period of operation. The 12-hour time period begins with injection of DFTPP. If time still remains in the 12-hour time period after meeting the technical acceptance criteria for the initial calibration, samples may be analyzed. It is not necessary to analyze a continuing calibration standard within this 12-hour time period, if the initial calibration standard that is the same concentration as the continuing calibration standard meets the continuing calibration technical acceptance criteria.

13.3.5.3 Procedure. The following activities should be performed for continuing calibration:

- Set up the GC/MS system as specified by the manufacturer.
- Tune the GC/MS system to meet the technical acceptance criteria (see Section 13.3.3).
- Analyze the CAL 3 standard solution containing all the target analytes, surrogate compounds, and internal standards using the procedure listed for the initial calibration.
- Allow all standard/spiking solutions and blanks to warm to ambient temperature (approximately 1 hour) before preparation or analysis.
- Start the analysis of the continuing calibration by injecting 2.0 µL of the CAL 3 standard solution.

13.3.5.4 Calculations. The following calculations should be performed:

- **Relative Response Factor (RRF).** Calculate a relative response factor (RRF) for each target compound and surrogate.
- **Percent Difference (%D).** Calculate the percent difference between the mean relative response factor ($\overline{RRF}$) from the most recent initial calibration and the continuing calibration RRF for each analyte target compound and surrogate using the following equation:

$$\%D_{RRF} = \frac{RRF_c - \overline{RRF_i}}{\overline{RRF_i}} \times 100$$

where:

$\%D_{RRF}$ = percent difference between relative response factors

$\overline{RRF_i}$ = average relative response factor from the most recent initial calibration

RRF_c = relative response factor from the continuing calibration standard

13.3.5.5 Technical Acceptance Criteria. The continuing calibration standard must be analyzed for the compounds listed in concentration levels at the frequency described and on a GC/MS system meeting the DFTPP instrument performance check and the initial calibration technical acceptance criteria. The relative response factor for each target analyte and surrogate that has a required minimum relative response factor value must be greater than or equal to the compound's minimum acceptable relative response factor. For an acceptable

continuing calibration, the %D between the measured RRF for each target/surrogate compound of the CAL 3 standard and the mean value calculated during initial calibration must be within ±30 percent. If the criteria for %D are not met for the target or surrogate compounds, remedial action must be taken and recalibration may be necessary.

13.3.5.6 Corrective Action. If the continuing calibration technical acceptance criteria are not met, recalibrate the GC/MS instrument. It may be necessary to clean the ion source, change the column, or take other corrective actions to achieve the acceptance criteria. Continuing calibration technical acceptance criteria *MUST* be met before any samples or required blanks are analyzed in a 12-hour continuing calibration analytical sequence. Any samples or required blanks analyzed when continuing calibration criteria were not met will require reanalysis. Remedial actions, which include but are not limited to the following, must be taken if criteria are not met:

- Check and adjust GC and/or MS operating conditions.
- Clean or replace injector liner.
- Flush column with solvent according to manufacturers instructions.
- Break off a short portion (approximately 0.33 cm) of the column.
- Replace the GC column (performance of all initial calibration procedures are then required).
- Adjust MS for greater or lesser resolution.
- Calibrate MS mass scale.
- Prepare and analyze new continuing calibration.
- Prepare a new initial calibration curve.

13.3.6 Laboratory Method Blank (LMB).

13.3.6.1 Summary. The purpose of the LMB is to monitor for possible laboratory contamination. Perform all steps in the analytical procedure using all reagents, standards, surrogate compounds, equipment, apparatus, glassware, and solvents that would be used for a sample analysis. An LMB is an unused, certified filter/cartridge assembly which is carried though the same extraction procedure as a field sample. The LMB extract must contain the same amount of surrogate compounds and internal standards that is added to each sample. All field samples must be extracted and analyzed with an associated LMB.

13.3.6.2 Frequency. Analyze an LMB along with each batch of ≤20 samples through the entire extraction, concentration, and analysis process. The laboratory may also analyze a laboratory reagent blanks which is the same as an LMB except that no surrogate compounds or internal standards are added. This demonstrates that reagents contain no impurities producing an ion current above the level of background noise for quantitation ions for those compounds.

13.3.6.3 Procedure. Extract and analyze a clean, unused filter and glass cartridge assembly.

13.3.6.4 Technical Acceptance Criteria. Following are the technical criteria for the LMB:

- All blanks must be analyzed on a GC/MS system meeting the DFTPP instrument performance check and initial calibration or continuing calibration technical acceptance criteria.
- The percent recovery for each of the surrogates in the blank must be within the acceptance windows.
- The area response change for each of the internal standards for the blank must be within -50 percent and +100 percent compared to the internal standards in the most recent continuing calibration analysis.
- The retention time for each of the internal standards must be within ±20.0 seconds between the blank and the most recent CAL 3 analysis.
- The LMB must not contain any target analyte at a concentration greater than the MDL and must not contain additional compounds with elution characteristics and mass spectral features that would interfere

with identification and measurement of a method analyte at its MDL. If the LMB that was extracted along with a batch of samples is contaminated, the entire batch of samples must be flagged.

13.3.6.5 Corrective Action. Perform the following if the LCBs exceed criteria:

- If the blanks do not meet the technical acceptance criteria, the analyst must consider the analytical system to be out of control. It is the analyst's responsibility to ensure that method interferences caused by contaminants in solvents, reagents, glassware, and other sample storage and processing hardware that lead to discrete artifacts and/or elevated baselines in gas chromatograms be eliminated. If contamination is a problem, the source of the contamination must be investigated and appropriate corrective measure *MUST* be taken and documented before further sample analysis proceeds.
- All samples processed with a method blank that is out of control (i.e., contaminated) will require data qualifiers to be attached to the analytical results.

13.3.7 Laboratory Control Spike (LCS).

13.3.7.1 Summary. The purpose of the LCS is to monitor the extraction efficiency of Compendium Method TO-13A target analytes from a clean, uncontaminated PUF cartridge. An LCS is an unused, certified PUF that is spiked with the target analytes (1 μg) and carried through the same extraction procedures as the field samples. The LCS must contain the same amount of surrogate compounds and internal standards that is added to each sample. All field samples must be extracted and analyzed with an associated LCS. All steps in the analytical procedure must use the same reagents, standards, surrogate compounds, equipment, apparatus, glassware, and solvents that would be used for a sample analysis.

13.3.7.2 Frequency. Analyze an LCS along with each of ≤20 samples through the entire extraction, concentration, and analysis. (The laboratory may also analyze a laboratory reagent blank which is the same as an LMB except that no surrogate compounds or internal standards are added. This demonstrates that reagents contain no impurities producing an ion current above the level of background noise for quantitation ions of those compounds.)

13.3.7.3 Procedure. Extract and analyze a clean, unused certified PUF cartridge assembly.

13.3.7.4 Technical Acceptance Criteria. Technical criteria for the LCS are:

- All LCSs must be analyzed on a GC/MS system meeting the DFTPP instrument performance check and initial calibration or continuing calibration technical acceptance criteria.
- The percent recovery for each of the surrogates in the LCS must be within the acceptance windows.
- The area response change for each of the internal standards for the LCS must be within -50 percent and +100 percent compared to the internal standards in the most recent continuing calibration analysis.
- The retention time for each of the internal standards must be within ±20.0 seconds between the LCS and the most recent CAL 3 analysis.
- All target analytes spiked on the certified PUF cartridge must meet a percent recovery between 60-120 to be acceptable.

13.3.7.5 Corrective Action. Perform the following if the LCS exceed criteria:

- If the LCS do not meet the technical acceptance criteria, the analyst must consider the analytical system to be out of control. It is the analyst's responsibility to ensure that method interferences caused by contaminants in solvents, reagents, glassware, and other sample storage and processing hardware that lead to discrete artifacts and/or elevated baselines in gas chromatograms be eliminated. If contamination is a problem, the source of the contamination must be investigated and appropriate corrective measure *MUST* be taken and documented before further sample analysis proceeds.

- All samples processed with a LCS that is out of control (i.e., contaminated) will require re-analysis or data qualifiers to be attached to the analytical results.

13.4 Sample Analysis by GC/MS

13.4.1 Summary. The sample extract is analyzed by GC/MS and quantitated by the internal standard method.

13.4.2 Frequency. Before samples can be analyzed, the instrument must meet the GC/MS tuning and initial calibration or continuing calibration technical acceptance criteria. If there is time remaining in the 12-hour time period with a valid initial calibration or continuing calibration, samples may be analyzed in the GC/MS system that meet the instrument performance check criteria.

13.4.3 Procedure. For sample analysis, perform the following:

- Set up the GC/MS system.
- All sample extracts must be allowed to warm to ambient temperature (~1 hour) before analysis. All sample extracts must be analyzed under the same instrumental conditions as the calibration standards.
- Add the internal standard spiking solution to the 1.0 mL extract. For sample dilutions, add an appropriate amount of the internal standard spiking solution to maintain the concentration of the internal standards at 2 ng/μL in the diluted extract.
- Inject 2.0 μL of sample extract into the GC/MS, and start data acquisition.
- When all semi-volatile target compounds have eluted from the GC, terminate the MS data acquisition and store data files on the data system storage device. Use appropriate data output software to display full range mass spectra and SICPs. The sample analysis using the GC/MS is based on a combination of retention times and relative abundances of selected ions (see Table 6). These qualifiers should be stored on the hard disk of the GC/MS data computer and are applied for identification of each chromatographic peak. The retention time qualifier is determined to be ±0.10 minute of the library retention time of the compound. The acceptance level for relative abundance is determined to be ±15% of the expected abundance. Three ions are measured for most of the PAH compounds. When compound identification is made by the computer, any peak that fails any of the qualifying tests is flagged (e.g., with an *). The data should be manually examined by the analyst to determine the reason for the flag and whether the compound should be reported as found. Although this step adds some subjective judgment to the analysis, computer-generated identification problems can be clarified by an experienced operator. Manual inspection of the quantitative results should also be performed to verify concentrations outside the expected range.

13.4.4 Dilutions. The following section provides guidance when an analyte exceeds the calibration curve.

- When a sample extract is analyzed that has an analyte target compound concentration greater than the upper limit of the initial calibration range or saturated ions from a compound excluding the compound peaks in the solvent front), the extract must be diluted and reanalyzed. Secondary ion quantitation is *only* allowed when there are sample interferences with the primary quantitation ion. If secondary ion quantitation is used, calculate a relative response factor using the area response for the most intense secondary ion which is free of sample interferences, and document the reasons for the use of the secondary ion.
- Calculate the sample dilution necessary to keep the semi-volatile target compounds that required dilution within the upper half of the initial calibration range so that no compound has saturated ions (excluding the compound peaks in the solvent front). Dilute the sample in hexane in a volumetric flask. Analyze the sample dilution.

- The dilution factor chosen should keep the response of the largest peak for a *target compound* in the upper half of the initial calibration range of the instrument.
- If the on-column concentration of any target compound in any sample exceeds the initial calibration range, that sample must be diluted, the internal standard concentration readjusted, and the sample extract reanalyzed.
- Use the results of the original analysis to determine the approximate dilution factor required to get the largest analyte peak within the initial calibration range.

13.4.5 Quantitation. This section provides guidance for quantitating PAH analytes.

- Target components identified shall be quantified by the internal standard method. The internal standards used for the target compounds are the ones nearest the retention time of a given analyte.
- The relative response factor (RRF) from the daily continuing calibration standard analysis (or RRF of CAL 3) if the sample is analyzed in the same 12-hour sequence as the initial calibration) is used to calculate the concentration in the sample. Secondary ion quantitation is allowed *only* when there are sample interferences with the primary ion. If secondary ion quantitation is performed, document the reasons. The area of a secondary ion cannot be substituted for the area of a primary ion unless a relative response factor is calculated using the secondary ion.
- A retention time window is calculated for each single component analyte and surrogate. Windows are established as ±0.01 RRT units of the retention time for the analyte in CAL 3 of the initial calibration or the continuing calibration.

13.4.6 Calculations. Perform the following calculations:

13.4.6.1 Calculation of Concentration. Calculate target compound concentrations using the following equation:

$$\text{Concentration, (ng/std m}^3) = \frac{A_x I_s V_t D_f}{A_{is} V_i \overline{RRF}}$$

where:

A_x = area response for the compound to be measured, counts
A_{is} = area response for the internal standard, counts
I_s = amount of internal standard, ng/µL
$\overline{RRF}$ = the mean RRF from the most recent initial calibration, dimensionless
V_i = volume of air sampled, std m³
V_t = volume of final extract, µL
D_f = dilution factor for the extract. If there was no dilution, D_f equals 1. If the sample was diluted, the D_f is greater than 1.

The concentrations calculated can be converted to ppb_v for general reference. The analyte concentration can be converted to ppb_v using the following equation:

$$C_A(ppb_v) = C_A(ng/m^3) \times 24.4/MW_A$$

where:

C_A = concentration of analyte calculated, ng/std. m³
MW_A = molecular weight of analyte, g/g-mole
24.4 = molar volume occupied by ideal gas at standard temperature and pressure (25°C and 760 mm Hg), L/mole.

13.4.6.2 Estimated Concentration. The equation in Section 13.4.6.1 is also used for calculating the concentrations of the non-target compounds. Total area counts (or peak heights) from the total ion chromatogram generated by the mass spectrometer for Compendium Method TO-13A PAHs (see Figure 16) are to be used for both the non-target compound to be measured (A_x) and the internal standard (A_{is}). Associate the nearest internal standard free of interferences with the non-target compound to be measured. A relative response factor (RRF) of one (1) is to be assumed. The value from this quantitation shall be qualified as estimated ("J") (estimated, due to lack of a compound-specific response factor) and "N" (presumptive evidence of presence), indicating the quantitative and qualitative uncertainties associated with this non-target component. An estimated concentration should be calculated for all tentatively identified compounds (TICs) as well as those identified as unknowns.

13.4.6.3 Surrogate Percent Recovery (%R). Calculate the surrogate percent recovery using the following equation:

$$\%R = \frac{Q_d}{Q_a} \times 100$$

where:

Q_d = Quantity determined by analysis, ng
Q_a = Quantity added to sample/blank, ng

The surrogate percent recovery must fall between 60-120% to be acceptable.

13.4.6.4 Percent Area Response Change (%ARC). Calculate the percent area response change (%ARC) for the sample/blank analysis compared to the most recent CAL 3 analysis for each of the internal standard compounds using the following equation:

$$\%ARC = \frac{A_s - A_x}{A_x} \times 100$$

where:

%ARC = percent area response change, %
A_s = area response of the internal standard in the sample/blank analysis, counts
A_x = area response of the internal standard in the most recent CAL 3 analysis, counts

The area change for the internal standard must not exceed -50 to +100 percent.

13.4.6.5 Internal Standard Retention Time Shift (RTS). Calculate the retention time shift (RTS) between the sample/blank analysis and the most recent CAL 3 analysis for each of the internal standards using the following equation:

$$RTS = RT_s - RT_x$$

where:

RT_s = retention time of the IS in the sample
RT_x = retention time of the IS in the most recent CAL 3 analysis.

13.4.7 Technical Acceptance Criteria. The following guideline is provided as technical acceptance criteria.

13.4.7.1 All target compound concentrations must not exceed the upper limit of the initial calibration range and no compound ion (excluding the compound peaks in the solvent front) may saturate the detector.

13.4.7.2 Internal standard responses and retention times in all samples must be evaluated during or immediately after data acquisition. If the retention time for any internal standard changes by more than 20 seconds from the latest continuing calibration standard or CAL 3 if samples are analyzed in the same 12-hour sequence as the initial calibration, the chromatographic system must be inspected for malfunctions, and corrections made as required. The SICP of the internal standards must be monitored and evaluated for each field and QC sample. If the SICP area for any internal standard changes by more than a factor of -50 to +100 percent, the mass spectrometric system must be inspected for malfunction and corrections made as appropriate. If the analysis of a subsequent sample or standard indicates that the system is functioning properly, then corrections may not be required.

13.4.7.3 When target compounds are below the low standard, but the spectrum meets the identification criteria, report the concentration/amount with a "J." For example, if the low standard corresponds to 0.1 μg and an amount of 0.05 μg is calculated, report as "0.05J."

13.4.8 Corrective Action. The following section provides guidance if analyte exceeds the technical criteria.

- If the sample technical acceptance criteria for the surrogates and internal standards are not met, check calculations, surrogate and internal standard solutions, and instrument performance. It may be necessary to recalibrate the instrument or take other corrective action procedures to meet the surrogate and internal standard technical acceptance criteria.
- Sample analysis technical acceptance criteria *must* be met before data are reported. Samples contaminated from laboratory sources, or associated with a contaminated method blank, or any samples analyzed that are not meet the technical acceptance criteria will require reanalysis.
- The samples or standards with SICP areas outside the limits must be reanalyzed. If corrections are made, then the laboratory must demonstrate that the mass spectrometric system is functioning properly. This must be accomplished by the analysis of a standard or sample that meets the SICP criteria. After corrections are made, the reanalysis of samples analyzed while the system was malfunctioning is required.
- If after reanalysis, the SICP areas for all internal standards are inside the technical acceptance limits (-50 to +100 percent), then the problem with the first analysis is considered to have been within the control of the laboratory. Therefore, submit *only* data from the analysis with SICPs within the technical acceptance limits. This is considered the *initial* analysis and must be reported as such on all data deliverables.
- If the reanalysis of the sample does not solve the problem (i.e., the SICP areas are outside the technical acceptance limits for both analyses) then the laboratory must submit the SICP data and sample data from both analyses. Distinguish between the initial analysis and the reanalysis on all data deliverables, using the sample suffixes specified.
- Tentative identification of an analyte occurs when a peak from a sample extract falls within the daily retention time window.
- If sample peaks are not detected, or all are less than full-scale deflection, the undiluted extract is acceptable for GC/MS analysis. If any sample ions are greater than the 120 percent of the initial calibration curve range, calculate the dilution necessary to reduce the major ion to between half- and full-range response.

14. Quality Assurance/Quality Control (QA/QC)

14.1 General System QA/QC

14.1.1 Each laboratory that uses Compendium Method TO-13A must operate a formal quality control program. The minimum requirements of this program consist of an initial demonstration of laboratory capability and an ongoing analysis of spiked samples to evaluate and document quality data. The laboratory must maintain records to document the quality of the data generated. Ongoing data quality checks are compared with established performance criteria to determine if the results of analyses meet the performance characteristics of the method. When results of sample spikes indicate a typical method performance, a quality control check standard must be analyzed to confirm that the measurements were performed in an in-control mode of operation.

14.1.2 Before processing any samples, the analyst should demonstrate, through the analysis of a reagent solvent blank, that interferences from the analytical system, glassware, and reagents are under control. Each time a set of samples is extracted or there is a change in reagents, a reagent solvent blank should be processed as a safeguard against chronic laboratory contamination. The blank samples should be carried through all stages of the sample preparation and measurement steps.

14.1.3 For each analytical batch (up to 20 samples), a reagent blank, matrix spike, and deuterated/surrogate samples must be analyzed (the frequency of the spikes may be different for different monitoring programs). The blank and spiked samples must be carried through all stages of the sample preparation and measurement steps.

14.1.4 The experience of the analyst performing GC/MS is invaluable to the success of the methods. Each day that analysis is performed, the daily calibration sample should be evaluated to determine if the chromatographic system is operating properly. Questions that should be asked are: Do the peaks look normal? Are the response windows obtained comparable to the response from previous calibrations? Careful examination of the standard chromatogram can indicate whether the column is still good, the injector is leaking, the injector septum needs replacing, etc. If any changes are made to the system (e.g., column changed), recalibration of the system must take place.

14.2 Process, Field, and Solvent Blanks

14.2.1 One PUF cartridge and filter from each batch of approximately 20 should be analyzed without shipment to the field for the compounds of interest to serve as a process blank. A blank level specified in Section 10.2 for each cartridge/filter assembly is considered to be acceptable.

14.2.2 During each sampling episode, at least one cartridge and filter should be shipped to the field and returned, without drawing air through the sampler, to serve as a field blank.

14.2.3 During the analysis of each batch of samples at least one solvent process blank (all steps conducted but no cartridge or filter included) should be carried through the procedure and analyzed. Blank levels should be those specified in Section 10.2 for single components to be acceptable.

14.2.4 Because the sampling configuration (filter and backup sorbent) has been tested for targeted PAHs in the laboratory in relationship to collection efficiency and has been demonstrated to be greater than 95 percent for targeted PAHs (except naphthalene, acenaphthylene, and acenaphthene), no field recovery evaluation is required as part of the QA/QC program outlined in this section.

15. References

1. Dubois, L., Zdrojgwski, A., Baker, C., and Monknao, J.L., "Some Improvement in the Determination of Benzo[a]Pyrene in Air Samples," *J. Air Pollut. Contr. Assoc.*, 17:818-821, 1967.

2. Intersociety Committee, "Tentative Method of Analysis for Polynuclear Aromatic Hydrocarbon of Atmospheric Particulate Matter," *Health Laboratory Science*, 7(1):31-40, 1970.

3. Cautreels, W., and Van Cauwenberghe, K., "Experiments on the Distribution of Organic Pollutants Between Airborne Particulate Matter and Corresponding Gas Phase," *Atmos. Environ.*, 12:1133-1141, 1978.

4. "Tentative Method of Microanalysis for Benzo[a]Pyrene in Airborne Particles and Source Effluents," American Public Health Association, *Health Laboratory Science*, 7(1):56-59, 1970.

5. "Tentative Method of Chromatographic Analysis for Benzo[a]Pyrene and Benzo[k]Fluoranthene in Atmospheric Particulate Matter," American Public Health Association, *Health Laboratory Science*, 7(1):60-67, 1970.

6. "Tentative Method of Spectrophotometric Analysis for Benzo[a]Pyrene in Atmospheric Particulate Matter," American Public Health Association, *Health Laboratory Science*, 7(1):68-71, 1970.

7. Jones, P.W., Wilkinson, J.E., and Strup, P.E., *Measurement of Polycyclic Organic Materials and Other Hazardous Organic Compounds in Stack Gases: State-of-the-Art*, U. S. Environmental Protection Agency, Research Triangle Park, NC, U.S. EPA-600/2-77-202, 1977.

8. Walling, J.F., *Standard Operating Procedure for Ultrasonic Extraction and Analysis of Residual Benzo[a]Pyrene from Hi-Vol Filters via Thin-Layer Chromatography*, U.S. Environmental Protection Agency, Environmental Monitoring Systems Laboratory, Methods Development and Analysis Division, Research Triangle Park, NC, EMSL/RTP-SOP-MDAD-015, December, 1986.

9. Rasor, S., *Standard Operating Procedure for Polynuclear Aromatic Hydrocarbon Analysis by High Performance Liquid Chromatography Methods*, Acurex Corporation, Research Triangle Park, NC, 1978.

10. Rapport, S. W., Wang, Y. Y., Wei, E. T., Sawyer, R., Watkins, B. E., and Rapport, H., "Isolation and Identification of a Direct-Acting Mutagen in Diesel Exhaust Particulates," *Envir. Sci. Technol.*, 14:1505-1509, 1980.

11. Konlg, J., Balfanz, E., Funcke, W., and Romanowski, T., "Determination of Oxygenated Polycyclic Aromatic Hydrocarbons in Airborne Particulate Matter by Capillary Gas Chromatography and Gas Chromatography/Mass Spectrometry," *Anal. Chem.*, 55:599-603, 1983.

12. Chuang, J. C., Bresler, W. E., and Hannan, S. W., *Evaluation of Polyurethane Foam Cartridges for Measurement of Polynuclear Aromatic Hydrocarbons in Air*, U.S. Environmental Protection Agency, Environmental Monitoring Systems Laboratory, Methods Development and Analysis Division, Research Triangle Park, NC, EPA-600/4-85-055, September 1985.

13. Chuang, J. C., Hannan, S. W., and Koetz, J. R., *Stability of Polynuclear Aromatic Compounds Collected from Air on Quartz Fiber Filters and XAD-2 Resin*, U.S. Environmental Protection Agency, Environmental Monitoring Systems Laboratory, Methods Development and Analysis Division, Research Triangle Park, NC, EPA-600/4-86-029, September 1986.

14. Feng, Y., and Bidleman, T. F., "Influence of Volatility on the Collection of Polynuclear Aromatic Hydrocarbon Vapors with Polyurethane Foam," *Envir. Sci. Technol.*, 18:330-333, 1984.

15. Yamasaki, H., Kuwata, K., and Miyamoto, H., "Effects of Ambient Temperature on Aspects of Airborne Polycyclic Aromatic Hydrocarbons," *Envir. Sci. Technol.*, 16:89-194, 1982.

16. Galasyn, J. F., Hornig, J. F., and Soderberg, R. H., "The Loss of PAH from Quartz Fiber High Volume Filters," *J. Air Pollut. Contr. Assoc.*, 34:57-59, 1984.

17. You, F., and Bidleman, T. F., "Influence of Volatility on the Collection of Polynuclear Aromatic Hydrocarbon Vapors with Polyurethane Foam," *Envir. Sci. Technol.*, 18:330-333, 1984.

18. Chuang, J. C., Hannan, S. W., and Koetz, J. R., *Comparison of Polyurethane Foam and XAD-2 Resin as Collection Media for Polynuclear Aromatic Hydrocarbons in Air*, U.S. Environmental Protection Agency, Environmental Monitoring Systems Laboratory, Methods Development and Analysis Division, Research Triangle Park, NC, EPA-600/4-86-034, December 1986.

19. Chuang, J. C., Mack, G. A., Mondron, P. J., and Peterson, B. A., *Evaluation of Sampling and Analytical Methodology for Polynuclear Aromatic Compounds in Indoor Air*, U.S. Environmental Protection Agency, Environmental Monitoring Systems Laboratory, Methods Development and Analysis Division, Research Triangle Park, NC, EPA-600/4-85-065, January 1986.

20. Lewis, R. G., Brown, A. R., and Jackson, M. D., "Evaluation of Polyurethane Foam for High-Volume Air Sampling of Ambient Levels of Airborne Pesticides, Polychlorinated Biphenyls, and Polychlorinated Naphthalenes," *Anal. Chem.*, 49:1668-1672, 1977.

21. Lewis, R. G., and Jackson, M. D., "Modification and Evaluation of a High-Volume Air Sampler for Pesticides and Other Semi-volatile Industrial Organic Chemicals," *Anal. Chem.*, 54:592-594, 1982.

22. Winberry, W. T., and Murphy, N. T., *Supplement to Compendium of Methods for the Determination of Toxic Organic Compounds in Ambient Air*, U.S. Environmental Protection Agency, Environmental Monitoring Systems Laboratory, Quality Assurance Division, Research Triangle Park, NC, EPA-600/4-87-006, September 1986.

23. Winberry, W. T., and Murphy, N. T., *Second Supplement to Compendium of Methods for the Determination of Toxic Organic Compounds in Ambient Air*, U.S. Environmental Protection Agency, Environmental Monitoring Systems Laboratory, Quality Assurance Division, Research Triangle Park, NC, EPA 600/4-89-018, June 1989.

24. *Methods for Organic Chemical Analysis of Municipal and Industrial Wastewater*, U.S. Environmental Protection Agency, Environmental Monitoring and Support Laboratory, Cincinnati, OH, EPA-600/4-82-057, July 1982.

25. *ASTM Annual Book of Standards*, Part 31, D 3694, "Standard Practice for Preparation of Sample Containers and for Preservation," American Society for Testing and Materials, Philadelphia, PA, p. 679, 1980.

26. Burke, J. A., "Gas Chromatography for Pesticide Residue Analysis; Some Practical Aspects," *Journal of the Association of Official Analytical Chemists*, 48:1037, 1965.

27. Cole, T., Riggin, R., and Glaser, J., *Evaluation of Method Detection Limits: Analytical Curve for EPA Method 610 - PNAs*, 5th International Symposium on Polynuclear Aromatic Hydrocarbons, Battelle, Columbus, OH, 1980.

28. *Handbook of Analytical Quality Control in Water and Wastewater Laboratories*, U.S. Environmental Protection Agency, Environmental Monitoring and Support Laboratory, Cincinnati, OH, EPA-600/4-79-019, March 1979.

29. *ASTM Annual Book of Standards*, Part 31, D 3370, "Standard Practice for Sampling Water," American Society for Testing and Materials, Philadelphia, PA, p. 76, 1980.

30. *Protocol for the Collection and Analysis of Volatile POHC's (Principal Organic Hazardous Constituents) Using VOST (Volatile Organic Sampling Train)*, U. S. Environmental Protection Agency, Research Triangle Park, NC, EPA-600/8-84-007, March 1984.

31. *Sampling and Analysis Methods for Hazardous Waste Combustion - Methods 3500, 3540, 3610, 3630, 8100, 8270, and 8310; Test Methods for Evaluating Solid Waste* (SW-846), U.S. Environmental Protection Agency, Office of Solid Waste, Washington, D.C.

32. Riggin, R. M., *Compendium of Methods for the Determination of Toxic Organic Compounds in Ambient Air*, U.S. Environmental Protection Agency, Environmental Monitoring Systems Laboratory, Quality Assurance Division, Research Triangle Park, NC, EPA-600/4-84-041, April 1984.

33. Chuang, C. C., and Peterson, B. A., *Review of Sampling and Analysis Methodology for Polynuclear Aromatic Compounds in Air from Mobile Sources, Final Report*, U. S. Environmental Protection Agency, Research Triangle Park, NC, EPA-600/S4-85-045, August 1985.

34. *Measurement of Polycyclic Organic Matter for Environmental Assessment*, U.S. Environmental Protection Agency, Industrial Environmental Research Laboratory, Research Triangle Park, NC, EPA-600/7-79-191, August 1979.

35. Hudson, J. L., *Standard Operating Procedure No. FA 113C: Monitoring for Particulate and Vapor Phase Pollutants Using the Portable Particulate/Vapor Air Sampler*, U.S. Environmental Protection Agency, Region VII, Environmental Monitoring and Compliance Branch, Environmental Services Division, Kansas City, KS, March 1987.

36. Trane, K. E., and Mikalsen, A., "High-Volume Sampling of Airborne Polycyclic Aromatic Hydrocarbons Using Glass Fibre Filters and Polyurethane Foam," *Atmos. Environ.*, 15:909-918, 1981.

37. Keller, C. D., and Bidleman, T. F., "Collection of Airborne Polycyclic Hydrocarbons and Other Organics with a Glass Fiber Filter - Polyurethane Foam System," *Atmos. Environ.*, 18:837-845, 1984.

38. Hunt, G. T., and Pangaro, N., "Ambient Monitoring of Polynuclear Aromatic Hydrocarbons (PAHs) Employing High Volume Polyurethane Foam (PUF) Samplers," In *Polynuclear Aromatic Hydrocarbons*, Cooke, M., Dennis, and A. J., Eds, Battelle Press, Columbus, OH, pp. 583-608, 1985.

39. Alfeim, I., and Lindskog, A., "A Comparison Between Different High Volume Sampling Systems for Collecting Ambient Airborne Particles for Mutagenicity Testing and for Analysis of Organic Compounds," *Sci. Total Environ.*, 34:203-222, 1984.

40. Umlauf, G., and Kaupp, H., "A Sampling Device for Semivolatile Organic Compounds in Ambient Air," *Chemosphere*, 27:1293-1296, 1993.

41. Hippelein, M., Kaupp, H., Dorr, G., and McLachlan, M. S., "Testing of a Sampling System and Analytical Method for Determination of Semivolatile Organic Chemicals in Air," *Chemosphere*, 26:2255-2263, 1993.

42. Ligocki, M. P., and Ponkow, J. F., "Assessment of Adsorption/Solvent Extraction with Polyurethane Foam and Adsorption/Thermal Desorption with Tenax-GC for Collection and Analysis of Ambient Organic Vapors," *Anal. Chem.*, 57:1138-1144, 1985.

43. Yamasaki, H., Kuwata, K., and Miyamoto, H., "Effects of Ambient Temperature on Aspects of Airborne Polycyclic Aromatic Hydrocarbons," *Envir. Sci. Technol.*, 16:189-194, 1982.

44. Hart, K. M., and Pankow, J. F., "High-Volume Air Sampler for Particle and Gas Sampling: Use of Backup Filters to Correct for the Adsorption of Gas-Phase Polycyclic Aromatic Hydrocarbons to the Front Filter," *Envir. Sci. Technol.*, 28:655-661, 1994.

45. Kaupp, H., and Umlauf, G., "Atmospheric Gas-Particle Partitioning of Organic Compounds: Comparison of Sampling Methods," *Atmos. Environ.*, 13:2259-2267, 1992.

46. Coutant, R. W., Brown, L., Chuang, J. C., Riggin, R. M., and Lewis, R. G., "Phase Distribution and Artifact Formation in Ambient Air Sampling for Polynuclear Aromatic Hydrocarbons," *Atmos. Environ.*, 22:403-409, 1988.

47. Coutant, R. W., Callahan, P. J., Kuhlman, M. R., and Lewis, R. G., "Design and Performance of a High-Volume Compound Annular Denuder," *Atmos. Environ.*, 23:2205-2211.

48. Lewis, R. G., Kelly, T. J., Chuang, J. C., Callahan, P. J., and Coutant, R. W., "Phase Distributions of Airborne Polycyclic Aromatic Hydrocarbons in Two U.S. Cities," In *Proceedings of the 9th World Clean Air Congress & Exhibition*, Montreal, Ontario, Canada, 1991, Vol., Paper IU-11E.02.

49. Kaupp, H., and Umlauf, G., "Atmospheric Gas-Particle Partitioning of Organic Compounds: Comparison of Sampling Methods," *Atmos. Environ.*, 26A:2259-2267, 1992.

50. Riggin, R. M., *Technical Assistance Document for Sampling and Analysis of Toxic Organic Compounds in Ambient Air*, U.S. Environmental Protection Agency, Environmental Monitoring Systems Laboratory, Quality Assurance Division, Research Triangle Park, NC, EPA-600/4-83-027, June 1983.

51. *ASTM Annual Book of Standards*, Part 31, D 3694, "Standard Practice for Preparation of Sample Containers and for Preservation," American Society for Testing and Materials, Philadelphia, PA, p. 679, 1980.

52. *Carcinogens - Working with Carcinogens*, Department of Health, Education, and Welfare, Public Health Service, Center for Disease Control, National Institute for Occupational Safety and Health, Publication No. 77-206, August 1977.

53. *OSHA Safety and Health Standards, General Industry*, (29CFR1910), Occupational Safety and Health Administration, OSHA, 2206, Revised, January 1976.

54. "Safety in Academic Chemistry Laboratories," American Chemical Society Publication, Committee on Chemical Safety, 3rd Edition, 1979.

TABLE 1. FORMULAE AND PHYSICAL PROPERTIES OF SELECTED PAHs

Compound	Formula	Molecular Weight	Melting Point, °C	Boiling Point, °C	Vapor Pressure, kPa	CAS RN #
Naphthalene	$C_{10}H_8$	128.18	80.2	218	1.1×10^{-1}	91-20-3
Acenaphthylene	$C_{12}H_8$	152.20	92-93	265-280	3.9×10^{-1}	208-96-8
Acenaphthene	$C_{12}H_{10}$	154.20	90-96	278-279	2.1×10^{-1}	83-32-9
Fluorene	$C_{13}H_{10}$	166.23	116-118	293-295	8.7×10^{-2}	86-73-7
Anthracene	$C_{14}H_{10}$	178.24	216-219	340	36×10^{-3}	120-12-7
Phenanthrene	$C_{14}H_{10}$	178.24	96-101	339-340	2.3×10^{-2}	85-01-8
Fluoranthene	$C_{16}H_{10}$	202.26	107-111	375-393	6.5×10^{-4}	206-44-0
Pyrene	$C_{16}H_{10}$	202.26	150-156	360-404	3.1×10^{-4}	129-00-0
Benzo[a]anthracene	$C_{18}H_{12}$	228.30	157-167	435	1.5×10^{-6}	56-55-3
Chrysene	$C_{18}H_{12}$	228.30	252-256	441-448	5.7×10^{-7}	218-01-9
Benzo[b]fluoranthene	$C_{20}H_{12}$	252.32	167-168	481	6.7×10^{-7}	205-99-2
Benzo[k]fluoranthene	$C_{20}H_{12}$	252.32	198-217	480-471	2.1×10^{-7}	207-08-9
Perylene	$C_{20}H_{12}$	252.32	273-278	500-503	7.0×10^{-7}	198-55-8
Benzo[a]pyrene	$C_{20}H_{12}$	252.32	177-179	493-496	7.3×10^{-7}	50-32-8
Benzo[e]pyrene	$C_{20}H_{12}$	252.32	178-179	493	7.4×10^{-7}	192-97-2
Benzo[g,h,i]perylene	$C_{22}H_{12}$	276.34	275-278	525	1.3×10^{-7}	191-24-2
Indeno[1,2,3-cd]pyrene	$C_{22}H_{12}$	276.34	163-163	—	$ca.10^{-7}$	193-39-5
Dibenz[a,h]anthracene	$C_{22}H_{14}$	278.35	266-270	524	1.3×10^{-7}	53-70-3
Coronene	$C_{24}H_{12}$	300.36	438-440	525	2.0×10^{-7}	191-07-1

Many of these compounds sublime.

TABLE 2. GC-MS OPERATING CONDITIONS

Activity	Conditions
Gas Chromatography	
Column	J&W Scientific, DB-5 crosslinked 5% phenylmethyl silicone (30 m x 0.32 mm, 1.0 µm film thickness) or equivalent
Carrier Gas	Helium, velocity between 28-30 cm^3/sec at 250°C
Injection Volume	2 µL, Grob-type, splitless
Injector Temperature	290°C
Temperature Program	
Initial Column Temperature	70°C
Initial Hold Time	4 ± 0.1 min.
Program	10°C/min to 300°C and hold 10 min.
Final Temperature	300°C
Final Hold Time	10 min. or until all compounds of interest have eluted
Mass Spectrometer	
Transfer Line Temperature	290°C or According to Manufacturer's Specification
Source Temperature	According to Manufacturer's Specifications
Electron Energy	70 volts (nominal)
Ionization Mode	EI
Mass Range	35 to 500 amu, full range data acquisition (SCAN) mode
Scan Time	At least 5 scans per peak, not to exceed 1 second per scan.

TABLE 3. DFTPP KEY IONS & ION ABUNDANCE CRITERIA

Mass	Ion Abundance Criteria
51	30 to 60% of mass 198
68 70	Less than 2% of mass 69 Less than 2% of mass 69
127	40 to 60% of mass 198
197 198 199	Less than 2% of mass 198 Base peak, 100% relative abundance 5 to 9% of mass 198
275	10 to 30% of mass 198
365	Greater than 1.0% of mass 198
441 442 443	Present but less than mass 443 40% of mass 198 17 to 23% of mass 442

TABLE 4. COMPOSITION AND APPROXIMATE CONCENTRATION OF CALIBRATION SOLUTIONS

	Concentration, ng/µL				
Target Compound	CAL 1	CAL 2	CAL 3	CAL 4	CAL 5
PAHs	0.10	0.25	0.50	1.25	2.50
Acenaphthene	0.10	0.25	0.50	1.25	2.50
Acenaphthylene	0.10	0.25	0.50	1.25	2.50
Anthracene	0.10	0.25	0.50	1.25	2.50
Benz(a)anthracene	0.10	0.25	0.50	1.25	2.50
Benzo(a)pyrene	0.10	0.25	0.50	1.25	2.50
Benzo(b)fluoranthene	0.10	0.25	0.50	1.25	2.50
Benzo(e)pyrene	0.10	0.25	0.50	1.25	2.50
Benzo(g,h,i)perylene	0.10	0.25	0.50	1.25	2.50
Benzo(k)fluoranthene	0.10	0.25	0.50	1.25	2.50
Chrysene	0.10	0.25	0.50	1.25	2.50
Perylene	0.10	0.25	0.50	1.25	2.50
Dibenz(a,h)anthracene	0.10	0.25	0.50	1.25	2.50
Fluoranthene	0.10	0.25	0.50	1.25	2.50
Fluorene	0.10	0.25	0.50	1.25	2.50
Indeno(1,2,3-c,d)pyrene	0.10	0.25	0.50	1.25	2.50
Naphthalene	0.10	0.25	0.50	1.25	2.50
Coronene	0.10	0.25	0.50	1.25	2.50
Phenanthrene	0.10	0.25	0.50	1.25	2.50
Pyrene	0.10	0.25	0.50	1.25	2.50

TABLE 4. (Continued)

Target Compound	Concentration, ng/µL				
	CAL 1	CAL 2	CAL 3	CAL 4	CAL 5
SUGGESTED INTERNAL STANDARDS					
D_8-Naphthalene	0.5	0.5	0.5	0.5	0.5
D_{10}-Acenaphthene	0.5	0.5	0.5	0.5	0.5
D_{10}-Phenanthrene	0.5	0.5	0.5	0.5	0.5
D_{12}-Chrysene	0.5	0.5	0.5	0.5	0.5
D_{12}-Perylene	0.5	0.5	0.5	0.5	0.5
SUGGESTED SURROGATE COMPOUNDS					
D_{10}-Fluoranthene (field)	0.10	0.25	0.50	1.25	2.50
D_{12}-Benzo[a]pyrene (field)	0.10	0.25	0.50	1.25	2.50
D_{10}-Fluorene (lab)	0.10	0.25	0.50	1.25	2.50
D_{10}-Pyrene (lab)	0.10	0.25	0.50	1.25	2.50

TABLE 5. CHARACTERISTIC IONS FOR SURROGATE SUGGESTED STANDARDS

Classification	Primary Ion	Secondary Ion
Internal Standards		
D_8-Naphthalene	136	68,137
D_{10}-Acenaphthene	164	162,165
D_{10}-Phenanthrene	188	94,189
D_{12}-Chrysene	240	120,241
D_{12}-Perylene	264	260,265
Laboratory Surrogates		
D_{10}-Fluorene	176	88,177
D_{10}-Pyrene	212	106,213
Field Surrogates		
D_{10}-Fluoranthene	212	106,213
D_{12}-Benzo(a)pyrene	264	132,265

TABLE 6. EXAMPLE OF CHARACTERISTIC IONS FOR COMMON PAHs

Analyte	Primary Ion	Secondary Ion(s)
Pyrene	202	101,203
Benz(a)anthracene	228	229,226
Chrysene	228	226,229
Benzo(a)pyrene	252	253,126
Benzo(b)fluoranthene	252	253,126
Benzo(k)fluoranthene	252	253,126
Benzo(g,h,i)perylene	276	138,277
Dibenz(a,h)anthracene	278	139,279
Anthracene	178	179,176
Phenanthrene	178	179,176
Acenaphthene	154	153,152
Acenaphthylene	152	151,153
Benzo(e)pyrene	252	253,126
Fluoranthene	202	101,203
Fluorene	166	165,167
Ideno(1,2,3-cd)pyrene	276	138,227
Naphthalene	128	129,127
Perylene	252	253,126
Coronene	300	150,301

TABLE 7. EXAMPLE OF RELATIVE RESPONSE FACTOR CRITERIA FOR INITIAL AND CONTINUING CALIBRATION OF COMMON SEMI-VOLATILE COMPOUNDS

Semi-volatile Compounds	Minimum RRF	Maximum %RSD	Maximum %Difference
Naphthalene	0.700	30	30
Acenaphthylene	1.300	30	30
Acenaphthene	0.800	30	30
Fluorene	0.900	30	30
Phenanthrene	0.700	30	30
Anthracene	0.700	30	30
Fluoranthene	0.600	30	30
Pyrene	0.600	30	30
Benz(a)anthracene	0.800	30	30
Chrysene	0.700	30	30
Benzo(b)fluoranthene	0.700	30	30
Benzo(k)fluoranthene	0.700	30	30
Benzo(a)pyrene	0.700	30	30
Indeno(1,2,3-cd)pyrene	0.500	30	30
Dibenz(a,h)anthracene	0.400	30	30
Benzo(g,h,i)perylene	0.500	30	30
Perylene	0.500	30	30
Coronene	0.700	30	30

TABLE 8. MINIMUM SAMPLING EQUIPMENT CALIBRATION AND ACCURACY REQUIREMENTS

Equipment	Acceptance limits	Frequency and method of measurement	Action if requirements are not met
Sampler	Indicated flow rate = true flow rate, ±10%.	Calibrate with certified transfer standard on receipt, after maintenance on sampler, and any time audits or flow checks deviate more than ±10% from the indicated flow rate or ±10% from the design flow rate.	Recalibrate
Associated equipment			
Sampler on/off timer	±30 min/24 hour	Check at purchase and routinely on sample-recovery days	Adjust or replace
Elapsed-time meter	±30 min/24 hour	Compare with a standard time-piece of known accuracy at receipt and at 6-month intervals	Adjust or replace
Flowrate transfer standard (orifice device)	Check at receipt for visual damage	Recalibrate annually against positive displacement standard volume meter	Adopt new calibration curve

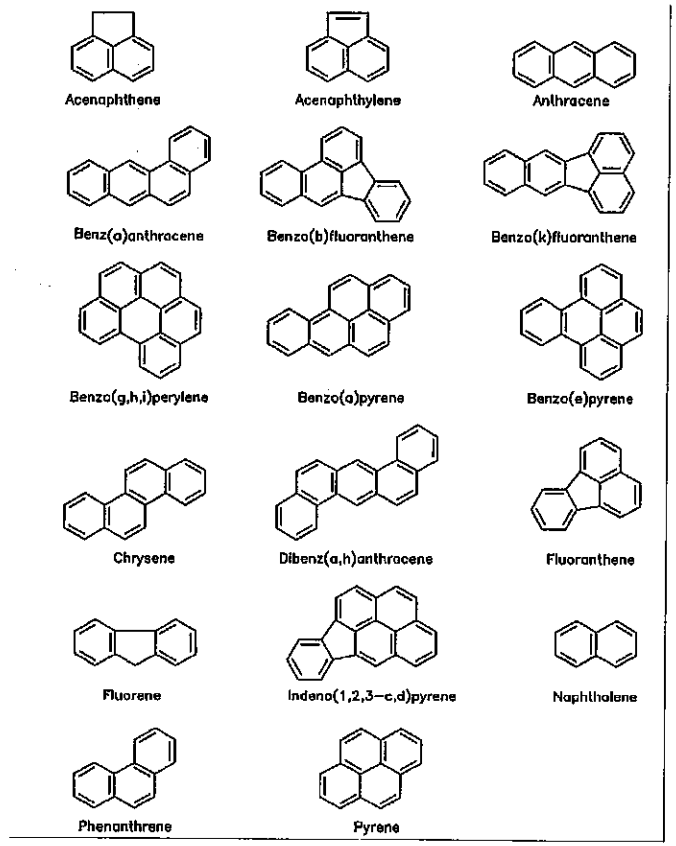

Figure 1. Ring structure of common PAHs.

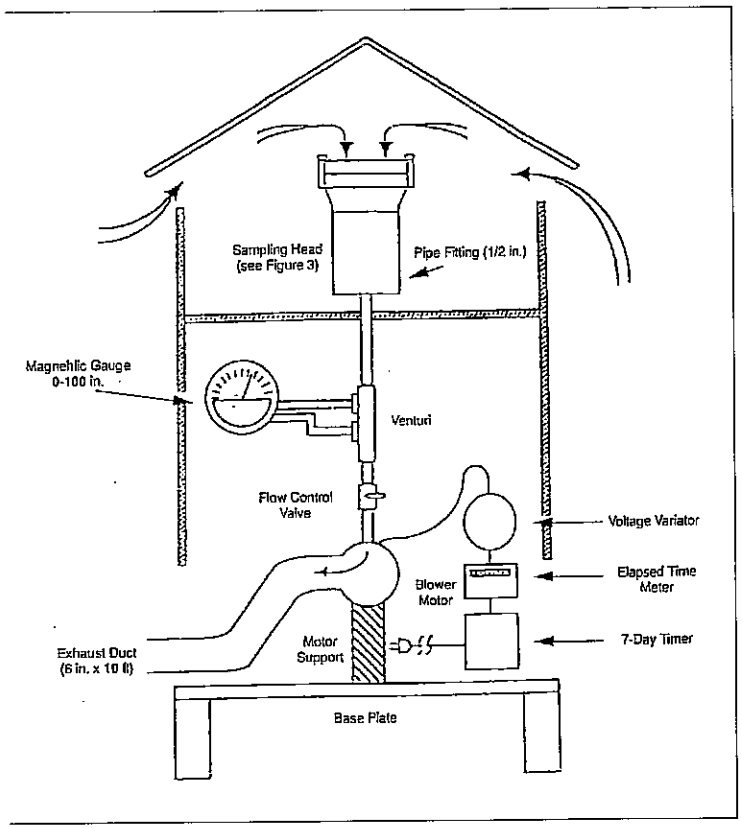

Figure 2. Typical high volume air sampler for PAHs.

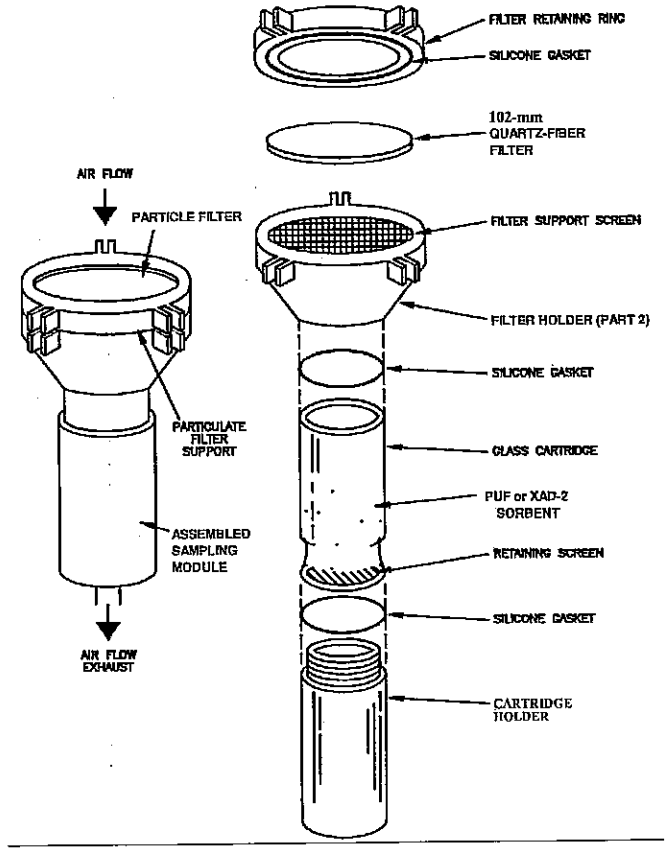

Figure 3. Typical absorbent cartridge assembly for sampling PAHs.

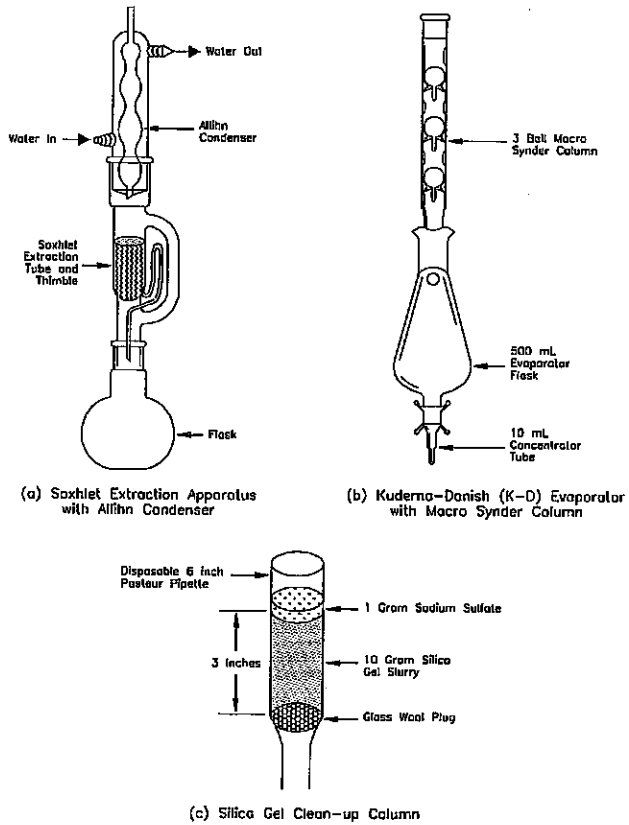

Figure 4. Apparatus used for sample clean-up and extraction.

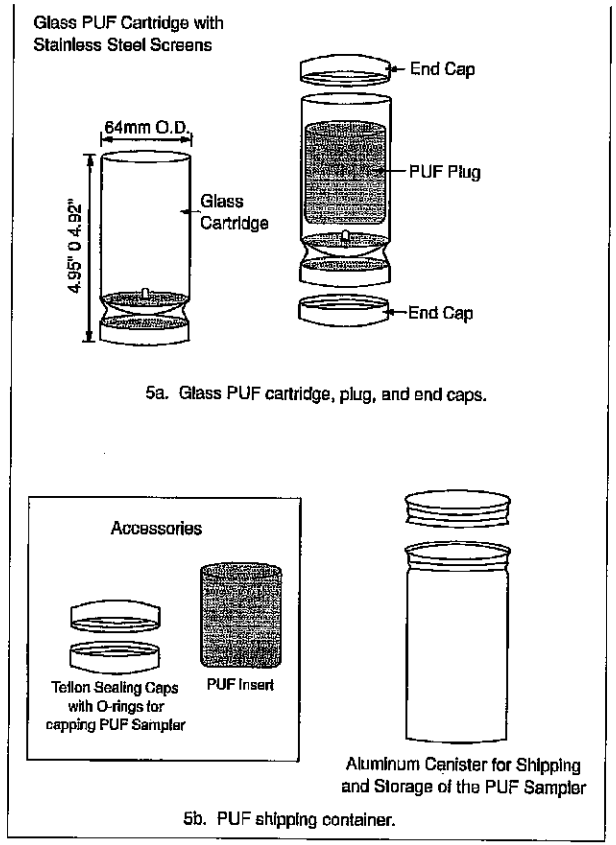

Figure 5. Glass PUF cartridge (5a) and shipping container (5b) for use with Compendium Method TO-13A.

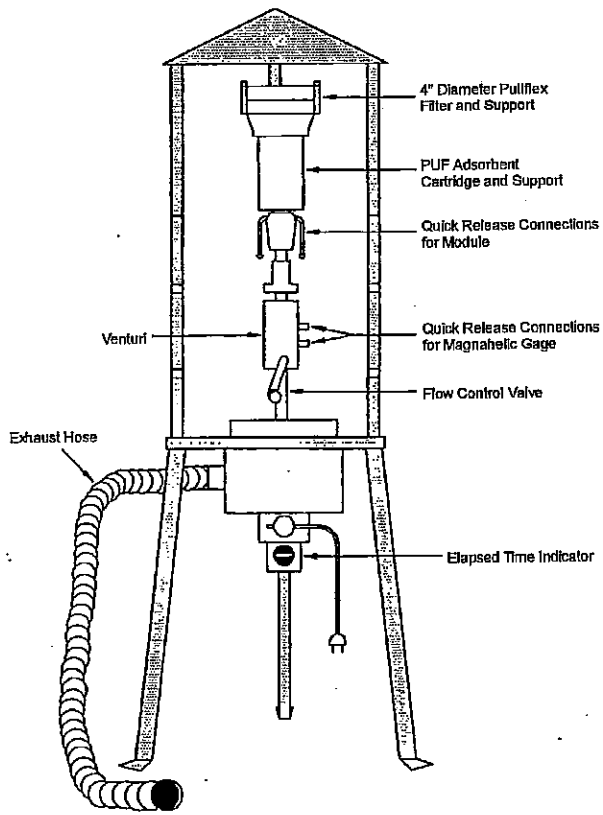

Figure 6. Example of a field portable high volume air sampler for sampling PAHs developed by EPA.

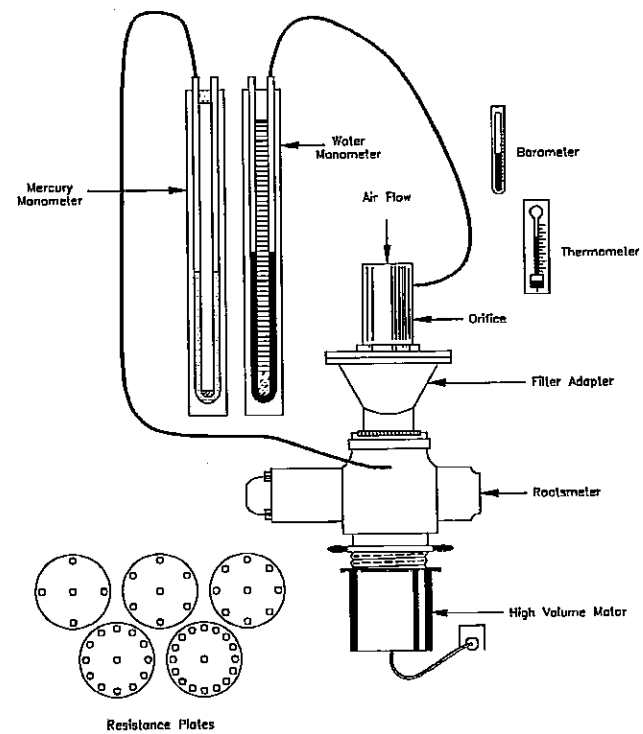

Figure 7. Positive displacement rootsmeter used to calibrate orifice transfer standard used in Compendium Method TO-13A.

COMPENDIUM METHOD TO-13A
ORIFICE CALIBRATION DATA SHEET

T_1 _____ Name _____
P_1 _____ mmHg Date _____
Orifice No. _____
Rootsmeter No. _____

Resistance Plants (No. of holes)	Air Volume Measured by Rootsmeter V_m (R^3)	(m^3)	Standard Volume V_{std} (std m^3)	Time for Air Volume to Pass Through Rootsmeter, θ (min)	Rootsmeter Pressure Differential, ΔP (mm Hg)	Pressure Drop Across Orifice, ΔH (in. H_2O)	x-Axis Standard Flowrate, Q_{std} (std m^3/min)	
5	200	5.66						
7	200	5.66						
10	300	8.50						
13	300	8.50						
18	300	8.50						

Factors: $(R^3)(0.02832\ \frac{m^3}{R^3}) = m^3$ and (in. Hg) $25.4\ (\frac{mm\ Hg}{in.\ Hg}) = mm\ Hg$

Calculation Equations:

1. $V_{std} = V_m\ (\frac{P_1 - \Delta P}{P_{std}})(\frac{T_{std}}{T_1})$

where:

$T_{std} = 296°K$
$P_{std} = 760.0$ mm Hg

2. $Q_{std} = \frac{V_{std}}{\theta}$

Figure 8. Example of a high-volume orifice calibration data sheet for Compendium Method TO-13A.

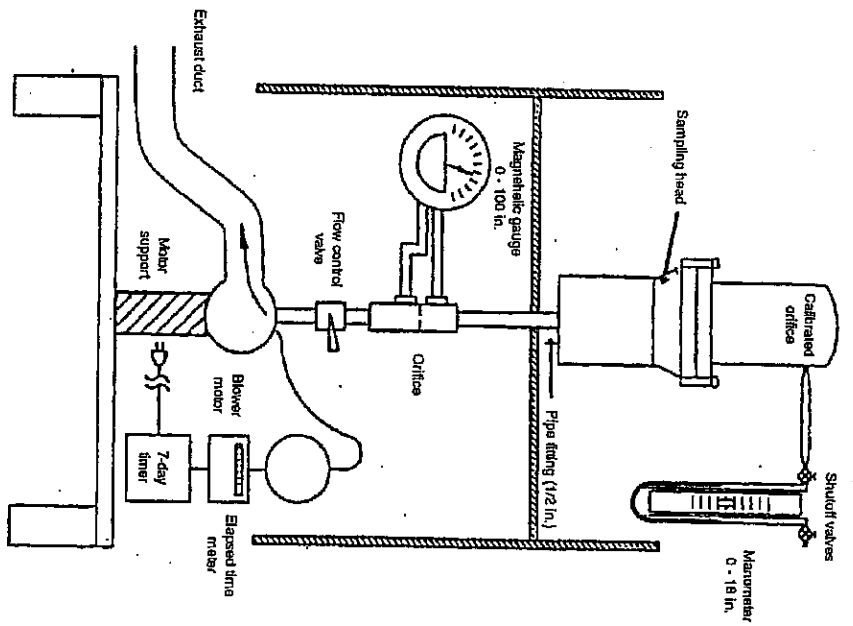

Figure 9. Typical field calibration configuration for Compendium Method TO-13A sampler.

FIELD CALIBRATION DATA SHEET FOR COMPENDIUM METHOD TO-13A PAH
SAMPLER CALIBRATION

Sampler ID: _____
Sampler Location: _____

Calibration Orifice ID: _____
Job No.: _____
High Volume Transfer Orifice Data:
Correlation Coefficient (CC1): _____ Slope (M1): _____
(CC2): _____ (M2): _____
Intercept (B1): _____
(B2): _____

Calibration Date: ___ Time: _____
Calibration Ambient Temperature: ___°F ___°C CALIBRATOR'S SIGNATURE
Calibration Ambient Barometric Pressure: ___"Hg ___ mm Hg _____
Calibration set point (SP): _____

SAMPLER CALIBRATION

Actual values from calibration		Calibrated values		
Orifice manometer, inches (Y1)	Monitor magnehelic, inches (Y2)	Orifice manometer (Y3)	Monitor magnehelic (Y4)	Calculated value orifice flow, scm (X1)
	70			
	60			
	50			
	40			
	30			
	20			
	10			

Definitions

Y1 = Calibration orifice reading, in. H_2O
Y2 = Monitor magnehelic reading, in. H_2O
P_a = Barometric pressure actual, mm Hg
B1 = Manufacturer's Calibration orifice Intercept
M1 = Manufacturer's Calibration orifice manometer slope
Y3 = Calculated value for orifice manometer
= $\{Y1(Pa/760)[298/(Ta + 273)]\}^{1/2}$
Y4 = Calculated value for magnehelic
= $\{Y2(Pa/760)[298/(Ta + 273)]\}^{1/2}$
X1 = Calculated value orifice flow, scm
= (Y3 - B1)/M1
P_{std} = Barometric pressure standard, 760 mm Hg
T_a = Temperature actual, °C
T_{std} = Temperature standard, 25°C

Figure 10. Typical orifice transfer field calibration data sheet for Compendium Method TO-13A.

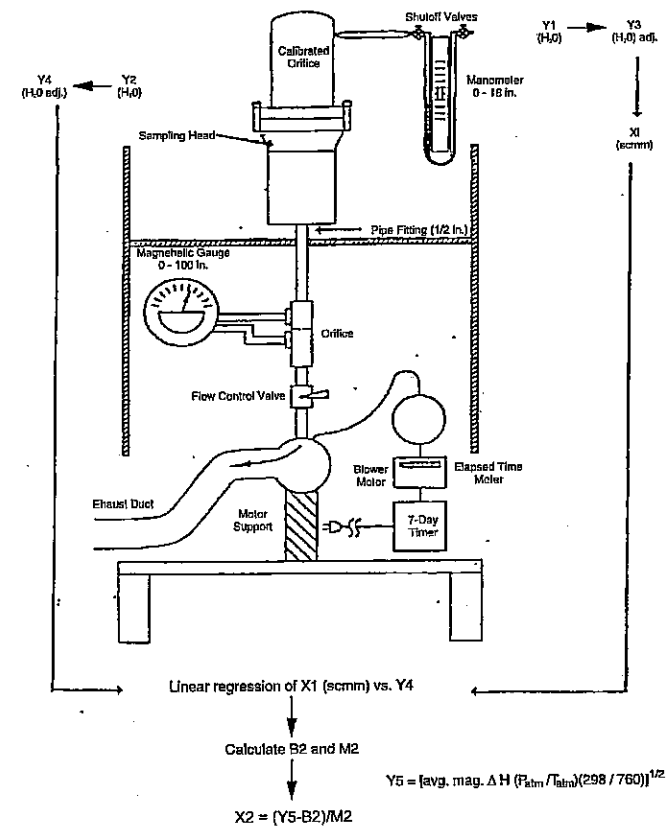

Figure 11. Example of relationship between orifice transfer standard and flow rate through Compendium Method TO-13A sampler.

COMPENDIUM METHOD TO-13A
FIELD TEST DATA SHEET
GENERAL INFORMATION

Sampler I.D. No.: _____
Lab PUF Sample No.: _____
Sample location: _____

Operator: _____
Other: _____

PUF Cartridge Certification Date: _____
Date/Time PUF Cartridge Installed: _____
Elapsed Timer: _____
Start _____
Stop _____
Diff. _____

	Start	Stop
Barometric pressure ("Hg)	_____	_____
Ambient Temperature (°F)	_____	_____
Rain	Yes ____	Yes ____
	No ____	No ____

Sampling time
Start _____
Stop _____
Diff. _____

Sampling
M1 _____ B1 _____
M2 _____ B2 _____

Audit flow check within ±10 of set point
____ Yes
____ No

TIME	TEMP	BAROMETRIC PRESSURE	MAGNEHELIC READING	CALCULATED FLOW RATE (std. m³)	READ BY
Avg.					

Comments
_____
_____
_____

Figure 12. Example of typical Compendium Method TO-13A field test data sheet (FTDS).

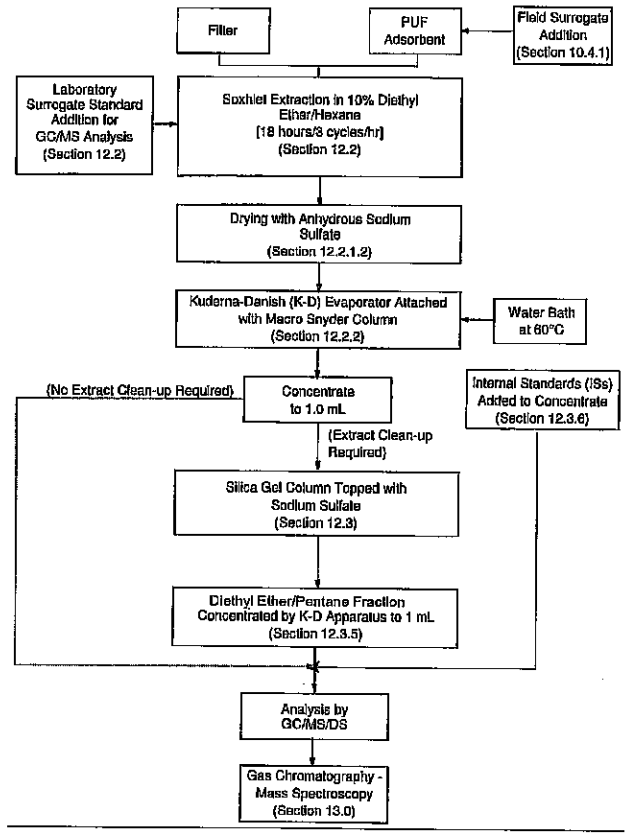

Figure 13. Sample clean-up, concentration, separation and analysis sequence for common PAHs.
[Note: XAD-2 sequence is similar to PUF except methylene chloride is the solvent.]

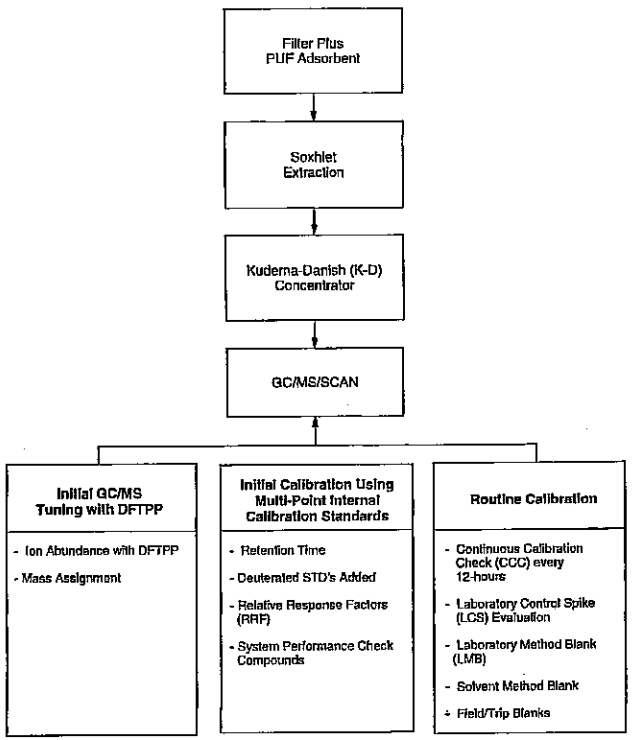

Figure 14. Typical quality assurance specifications for GC/MS/DS operation.

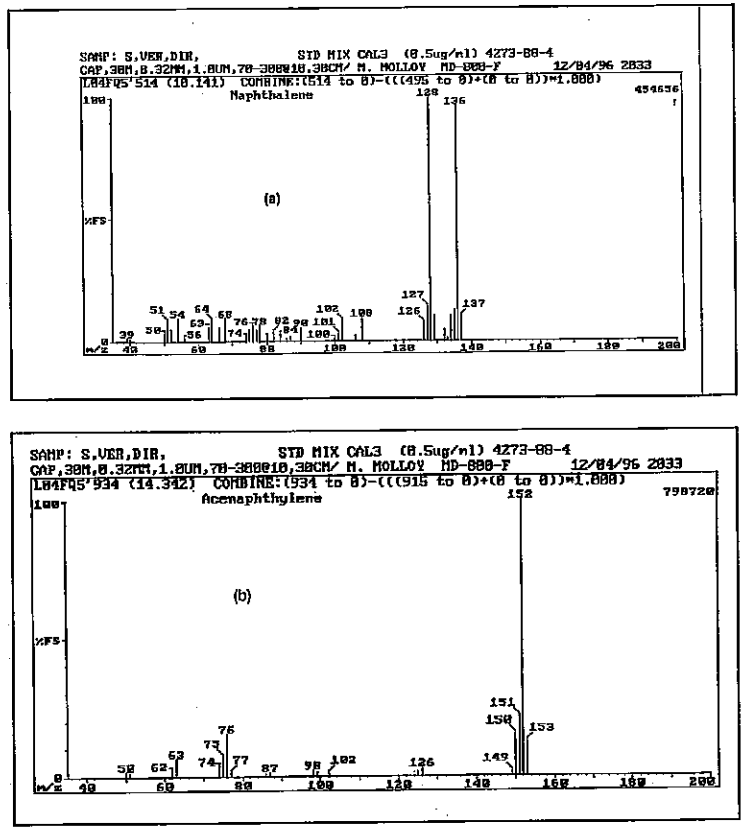

Figure 15. Mass spectra of Compendium Method TO-13A compounds for (a) naphthalene and (b) acenaphthylene.

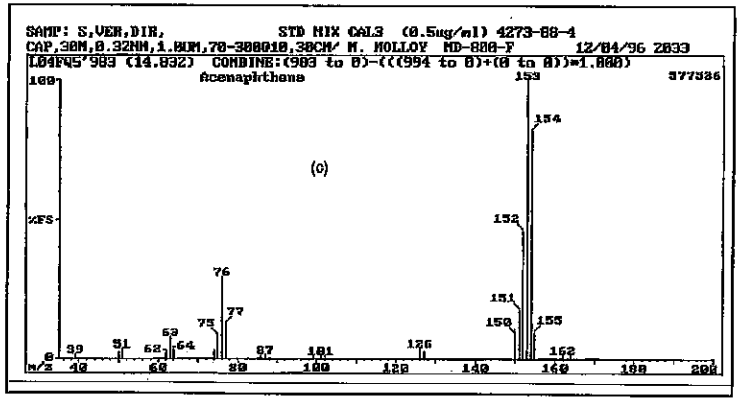

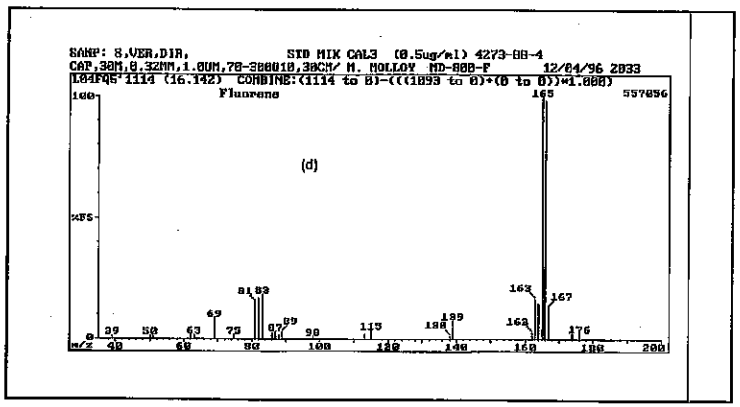

Figure 15 (Cont). Mass spectra of Compendium Method TO-13A compounds for (c) acenaphthene and (d) fluorene.

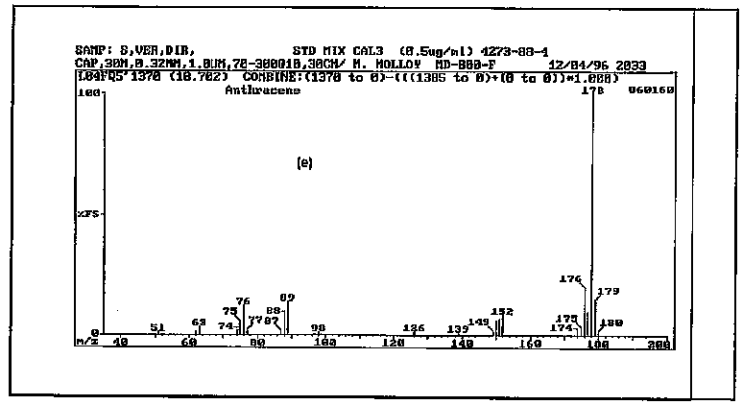

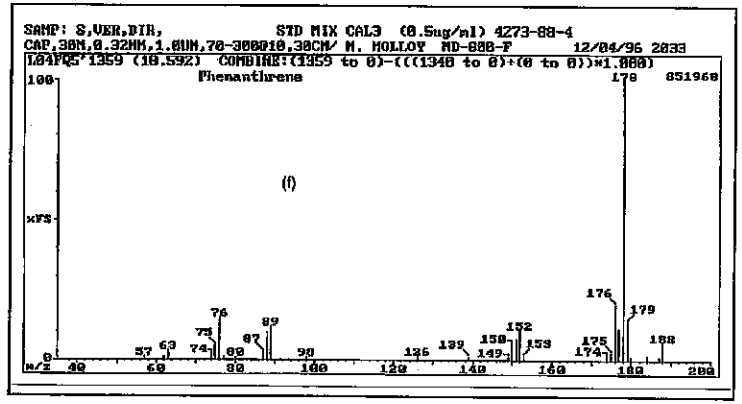

Figure 15 (Cont). Mass spectra of Compendium Method TO-13A compounds for (e) anthracene and (f) phenanthrene.

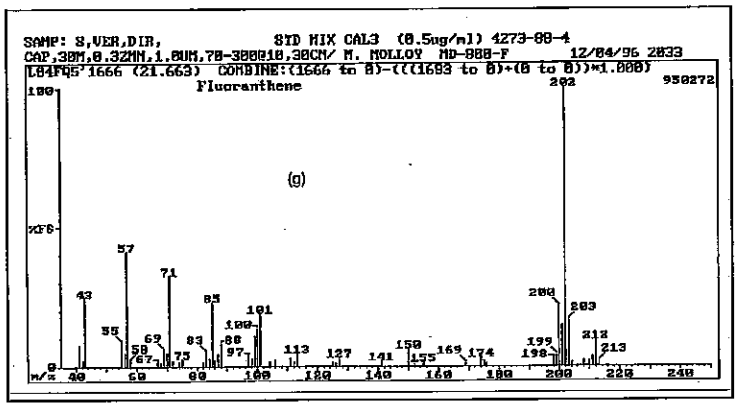

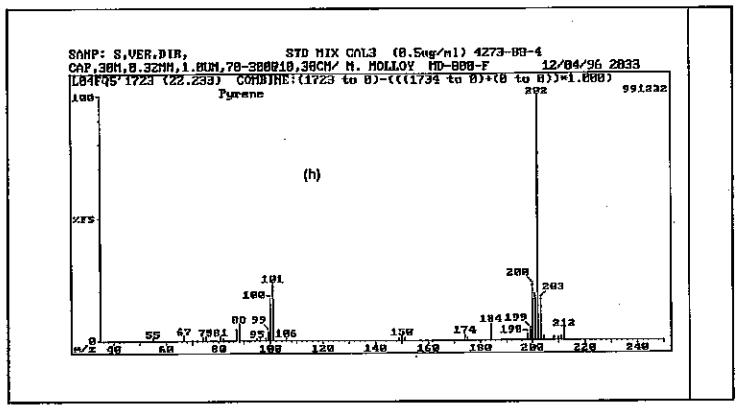

Figure 15 (Cont). Mass spectra of Compendium Method TO-13A compounds for (g) fluoranthene and (h) pyrene.

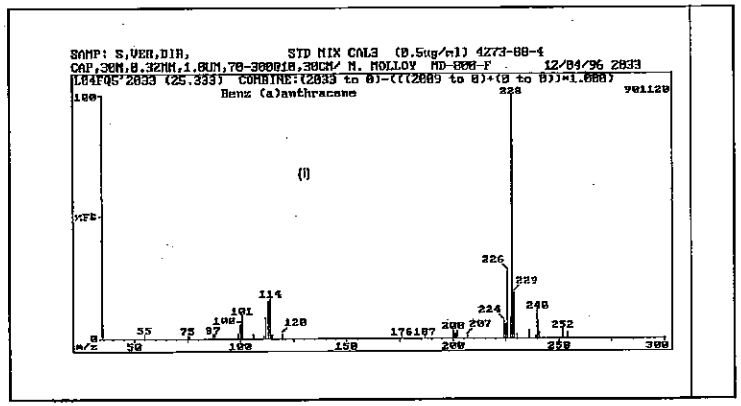

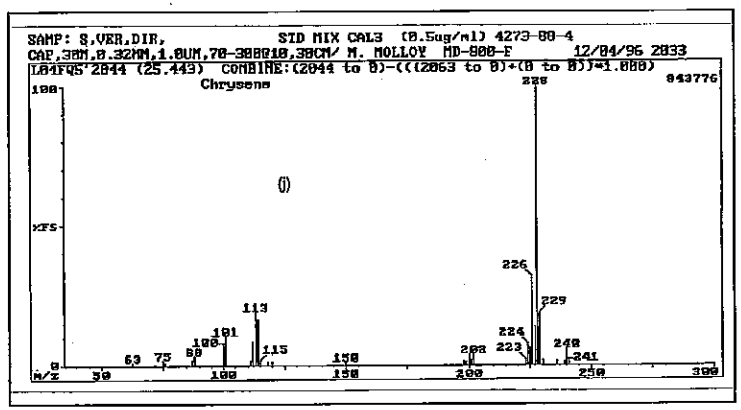

Figure 15 (Cont). Mass spectra of Compendium Method TO-13A compounds for (i) benz(a)anthracene and (j) chrysene.

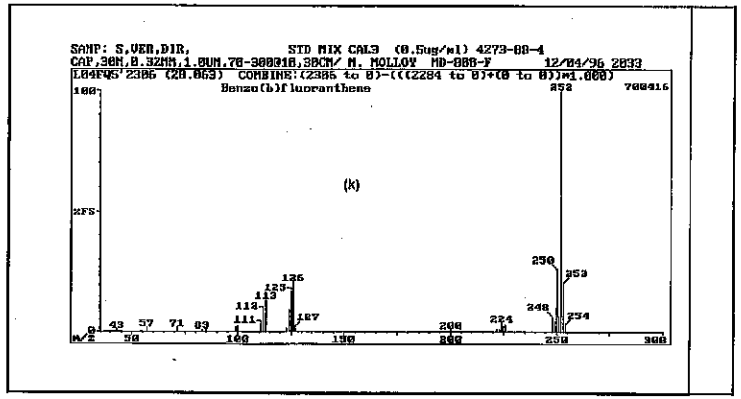

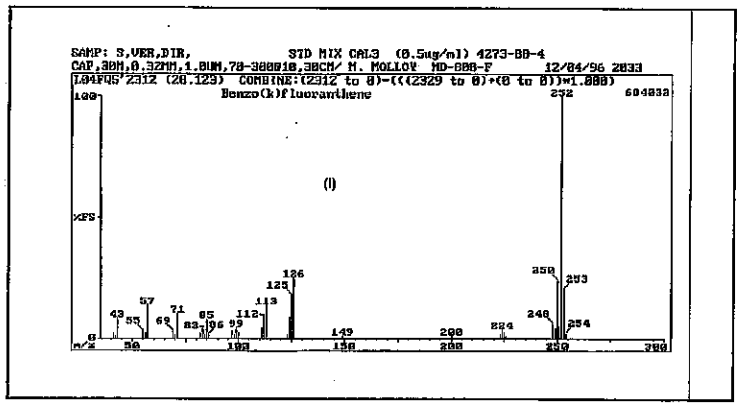

Figure 15 (Cont). Mass spectra of Compendium Method TO-13A compounds for (k) benzo(b)fluoranthene and (l) benzo(k)fluoranthene.

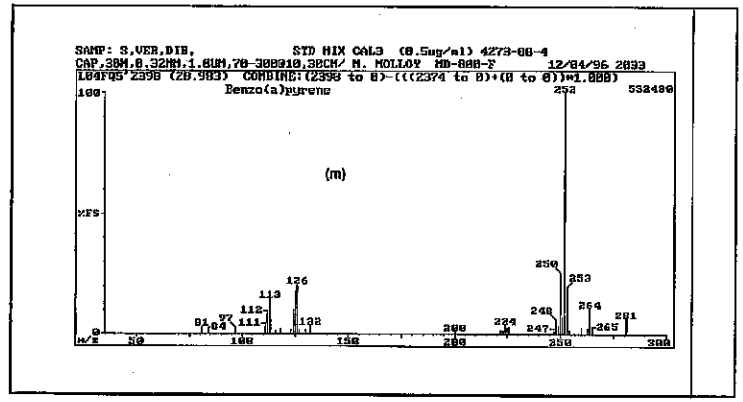

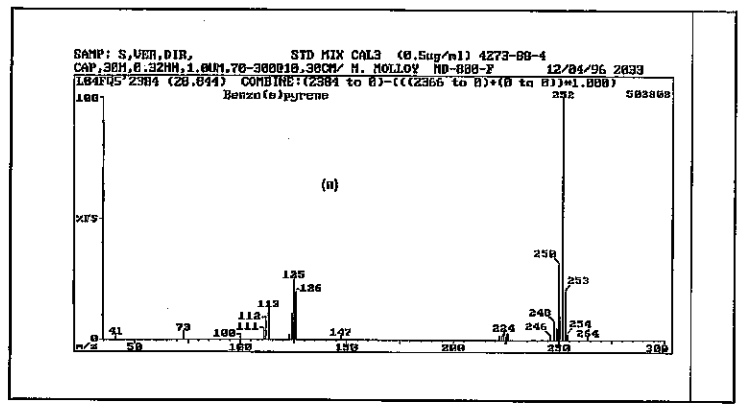

Figure 15 (Cont). Mass spectra of Compendium Method TO-13A compounds for (m) benzo(a)pyrene and (n) benzo(e)pyrene.

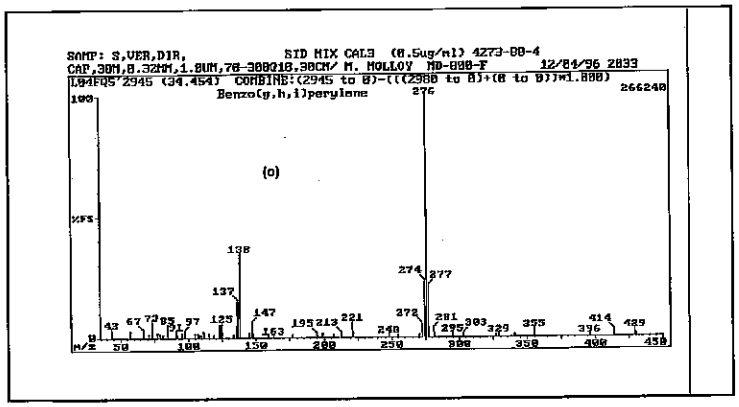

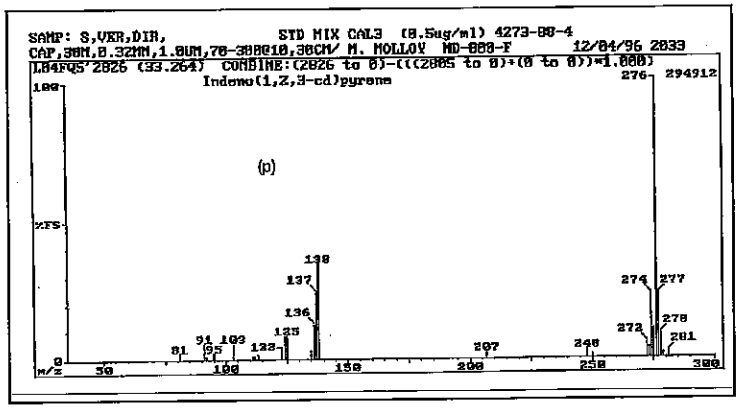

Figure 15 (Cont). Mass spectra of Compendium Method TO-13A compounds for (o) benzo(g,h,i)perylene and (p) indeno(1,2,3-cd)pyrene.

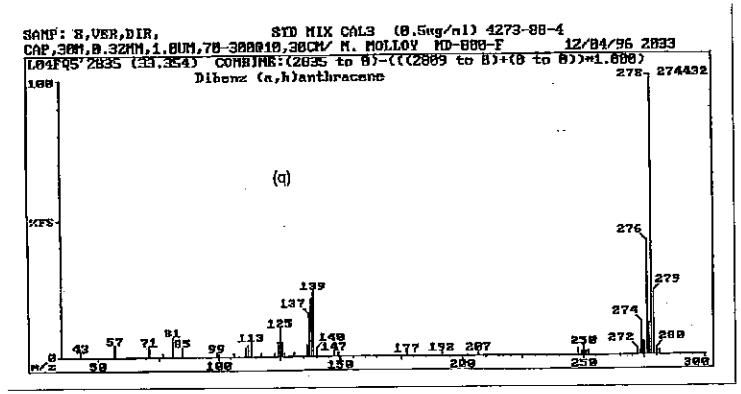

Figure 15 (Cont). Mass spectra of Compendium Method TO-13A compounds for (q) dibenz(a,h)anthracene.

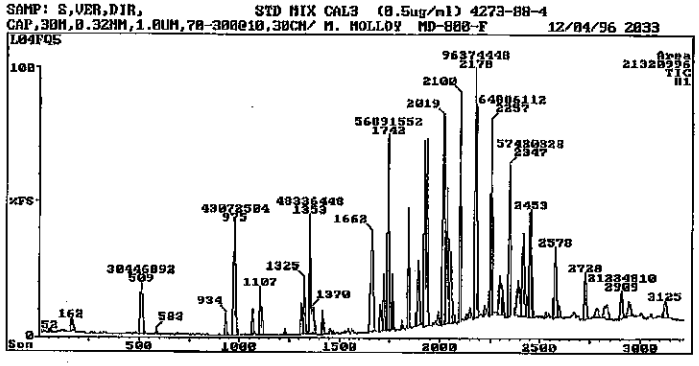

Figure 16. Total ion chromatogram (TIC) of Compendium Method TO-13A target PAHs.

This page intentionally left blank

EPA/625/R-96/010b

Compendium of Methods for the Determination of Toxic Organic Compounds in Ambient Air

Second Edition

Compendium Method TO-15

Determination Of Volatile Organic Compounds (VOCs) In Air Collected In Specially-Prepared Canisters And Analyzed By Gas Chromatography/ Mass Spectrometry (GC/MS)

Center for Environmental Research Information
Office of Research and Development
U.S. Environmental Protection Agency
Cincinnati, OH 45268

January 1999

Method TO-15
Acknowledgements

This Method was prepared for publication in the *Compendium of Methods for the Determination of Toxic Organic Compounds in Ambient Air, Second Edition* (EPA/625/R-96/010b), which was prepared under Contract No. 68-C3-0315, WA No. 3-10, by Midwest Research Institute (MRI), as a subcontractor to Eastern Research Group, Inc. (ERG), and under the sponsorship of the U.S. Environmental Protection Agency (EPA). Justice A. Manning, John O. Burckle, and Scott Hedges, Center for Environmental Research Information (CERI), and Frank F. McElroy, National Exposure Research Laboratory (NERL), all in the EPA Office of Research and Development, were responsible for overseeing the preparation of this method. Additional support was provided by other members of the Compendia Workgroup, which include:

- John O. Burckle, EPA, ORD, Cincinnati, OH
- James L. Cheney, Corps of Engineers, Omaha, NB
- Michael Davis, U.S. EPA, Region 7, KC, KS
- Joseph B. Elkins Jr., U.S. EPA, OAQPS, RTP, NC
- Robert G. Lewis, U.S. EPA, NERL, RTP, NC
- Justice A. Manning, U.S. EPA, ORD, Cincinnati, OH
- William A. McClenny, U.S. EPA, NERL, RTP, NC
- Frank F. McElroy, U.S. EPA, NERL, RTP, NC
- Heidi Schultz, ERG, Lexington, MA
- William T. "Jerry" Winberry, Jr., EnviroTech Solutions, Cary, NC

This Method is the result of the efforts of many individuals. Gratitude goes to each person involved in the preparation and review of this methodology.

Author(s)
- William A. McClenny, U.S. EPA, NERL, RTP, NC
- Michael W. Holdren, Battelle, Columbus, OH

Peer Reviewers
- Karen Oliver, ManTech, RTP, NC
- Jim Cheney, Corps of Engineers, Omaha, NB
- Elizabeth Almasi, Varian Chromatography Systems, Walnut Creek, CA
- Norm Kirshen, Varian Chromatography Systems, Walnut Creek, CA
- Richard Jesser, Graseby, Smyrna, GA
- Bill Taylor, Graseby, Smyrna, GA
- Lauren Drees, U.S. EPA, NRMRL, Cincinnati, OH

Finally, recognition is given to Frances Beyer, Lynn Kaufman, Debbie Bond, Cathy Whitaker, and Kathy Johnson of Midwest Research Institute's Administrative Services staff whose dedication and persistence during the development of this manuscript has enabled it's production.

DISCLAIMER

This Compendium has been subjected to the Agency's peer and administrative review, and it has been approved for publication as an EPA document. Mention of trade names or commercial products does not constitute endorsement or recommendation for use.

METHOD TO-15

Determination of Volatile Organic Compounds (VOCs) In Air Collected In Specially-Prepared Canisters And Analyzed By Gas Chromatography/ Mass Spectrometry (GC/MS)

TABLE OF CONTENTS

	Page
1. Scope	15-1
2. Summary of Method	15-2
3. Significance	15-3
4. Applicable Documents	15-4
4.1 ASTM Standards	15-4
4.2 EPA Documents	15-4
5. Definitions	15-4
6. Interferences and Contamination	15-6
7. Apparatus and Reagents	15-6
7.1 Sampling Apparatus	15-6
7.2 Analytical Apparatus	15-8
7.3 Calibration System and Manifold Apparatus	15-10
7.4 Reagents	15-10
8. Collection of Samples in Canisters	15-10
8.1 Introduction	15-10
8.2 Sampling System Description	15-11
8.3 Sampling Procedure	15-12
8.4 Cleaning and Certification Program	15-14
9. GC/MS Analysis of Volatiles from Canisters	15-16
9.1 Introduction	15-16
9.2 Preparation of Standards	15-17
10. GC/MS Operating Conditions	15-21
10.1 Preconcentrator	15-21
10.2 GC/MS System	15-22
10.3 Analytical Sequence	15-22
10.4 Instrument Performance Check	15-23
10.5 Initial Calibration	15-23
10.6 Daily Calibration	15-27
10.7 Blank Analyses	15-27
10.8 Sample Analysis	15-28

TABLE OF CONTENTS (continued)

	Page
11. Requirements for Demonstrating Method Acceptability for VOC Analysis from Canisters	15-31
11.1 Introduction	15-31
11.2 Method Detection Limit	15-31
11.3 Replicate Precision	15-31
11.4 Audit Accuracy	15-32
12. References	15-32

METHOD TO-15

Determination of Volatile Organic Compounds (VOCs) In Air Collected In Specially-Prepared Canisters And Analyzed By Gas Chromatography/ Mass Spectrometry (GC/MS)

1. Scope

1.1 This method documents sampling and analytical procedures for the measurement of subsets of the 97 volatile organic compounds (VOCs) that are included in the 189 hazardous air pollutants (HAPs) listed in Title III of the Clean Air Act Amendments of 1990. VOCs are defined here as organic compounds having a vapor pressure greater than 10^{-1} Torr at 25°C and 760 mm Hg. Table 1 is the list of the target VOCs along with their CAS number, boiling point, vapor pressure and an indication of their membership in both the list of VOCs covered by Compendium Method TO-14A (1) and the list of VOCs in EPA's Contract Laboratory Program (CLP) document entitled: *Statement-of-Work (SOW) for the Analysis of Air Toxics from Superfund Sites (2).*

Many of these compounds have been tested for stability in concentration when stored in specially-prepared canisters (see Section 8) under conditions typical of those encountered in routine ambient air analysis. The stability of these compounds under all possible conditions is not known. However, a model to predict compound losses due to physical adsorption of VOCs on canister walls and to dissolution of VOCs in water condensed in the canisters has been developed (3). Losses due to physical adsorption require only the establishment of equilibrium between the condensed and gas phases and are generally considered short term losses, (i.e., losses occurring over minutes to hours). Losses due to chemical reactions of the VOCs with cocollected ozone or other gas phase species also account for some short term losses. Chemical reactions between VOCs and substances inside the canister are generally assumed to cause the gradual decrease of concentration over time (i.e., long term losses over days to weeks). Loss mechanisms such as aqueous hydrolysis and biological degradation (4) also exist. No models are currently known to be available to estimate and characterize all these potential losses, although a number of experimental observations are referenced in Section 8. Some of the VOCs listed in Title III have short atmospheric lifetimes and may not be present except near sources.

1.2 This method applies to ambient concentrations of VOCs above 0.5 ppbv and typically requires VOC enrichment by concentrating up to one liter of a sample volume. The VOC concentration range for ambient air in many cases includes the concentration at which continuous exposure over a lifetime is estimated to constitute a 10^{-6} or higher lifetime risk of developing cancer in humans. Under circumstances in which many hazardous VOCs are present at 10^{-6} risk concentrations, the total risk may be significantly greater.

1.3 This method applies under most conditions encountered in sampling of ambient air into canisters. However, the composition of a gas mixture in a canister, under unique or unusual conditions, will change so that the sample is known not to be a true representation of the ambient air from which it was taken. For example, low humidity conditions in the sample may lead to losses of certain VOCs on the canister walls, losses that would not happen if the humidity were higher. If the canister is pressurized, then condensation of water from high humidity samples may cause fractional losses of water-soluble compounds. Since the canister surface area is limited, all gases are in competition for the available active sites. Hence an absolute storage stability cannot be assigned to a specific gas. Fortunately, under conditions of normal usage for sampling ambient air, most VOCs can be recovered from canisters near their original concentrations after storage times of up to thirty days (see Section 8).

1.4 Use of the Compendium Method TO-15 for many of the VOCs listed in Table 1 is likely to present two difficulties: (1) what calibration standard to use for establishing a basis for testing and quantitation, and (2) how

to obtain an audit standard. In certain cases a chemical similarity exists between a thoroughly tested compound and others on the Title III list. In this case, what works for one is likely to work for the other in terms of making standards. However, this is not always the case and some compound standards will be troublesome. The reader is referred to the Section 9.2 on standards for guidance. Calibration of compounds such as formaldehyde, diazomethane, and many of the others represents a challenge.

1.5 Compendium Method TO-15 should be considered for use when a subset of the 97 Title III VOCs constitute the target list. Typical situations involve ambient air testing associated with the permitting procedures for emission sources. In this case sampling and analysis of VOCs is performed to determine the impact of dispersing source emissions in the surrounding areas. Other important applications are prevalence and trend monitoring for hazardous VOCs in urban areas and risk assessments downwind of industrialized or source-impacted areas.

1.6 Solid adsorbents can be used in lieu of canisters for sampling of VOCs, provided the solid adsorbent packings, usually multisorbent packings in metal or glass tubes, can meet the performance criteria specified in Compendium Method TO-17 which specifically addresses the use of multisorbent packings. The two sample collection techniques are different but become the same upon movement of the sample from the collection medium (canister or multisorbent tubes) onto the sample concentrator. Sample collection directly from the atmosphere by automated gas chromatographs can be used in lieu of collection in canisters or on solid adsorbents.

2. Summary of Method

2.1 The atmosphere is sampled by introduction of air into a specially-prepared stainless steel canister. Both subatmospheric pressure and pressurized sampling modes use an initially evacuated canister. A pump ventilated sampling line is used during sample collection with most commercially available samplers. Pressurized sampling requires an additional pump to provide positive pressure to the sample canister. A sample of air is drawn through a sampling train comprised of components that regulate the rate and duration of sampling into the pre-evacuated and passivated canister.

2.2 After the air sample is collected, the canister valve is closed, an identification tag is attached to the canister, and the canister is transported to the laboratory for analysis.

2.3 Upon receipt at the laboratory, the canister tag data is recorded and the canister is stored until analysis. Storage times of up to thirty days have been demonstrated for many of the VOCs (5).

2.4 To analyze the sample, a known volume of sample is directed from the canister through a solid multisorbent concentrator. A portion of the water vapor in the sample breaks through the concentrator during sampling, to a degree depending on the multisorbent composition, duration of sampling, and other factors. Water content of the sample can be further reduced by dry purging the concentrator with helium while retaining target compounds. After the concentration and drying steps are completed, the VOCs are thermally desorbed, entrained in a carrier gas stream, and then focused in a small volume by trapping on a reduced temperature trap or small volume multisorbent trap. The sample is then released by thermal desorption and carried onto a gas chromatographic column for separation.

As a simple alternative to the multisorbent/dry purge water management technique, the amount of water vapor in the sample can be reduced below any threshold for affecting the proper operation of the analytical system by

reducing the sample size. For example, a small sample can be concentrated on a cold trap and released directly to the gas chromatographic column. The reduction in sample volume may require an enhancement of detector sensitivity.

Other water management approaches are also acceptable as long as their use does not compromise the attainment of the performance criteria listed in Section 11. A listing of some commercial water management systems is provided in Appendix A. One of the alternative ways to dry the sample is to separate VOCs from condensate on a low temperature trap by heating and purging the trap.

2.5 The analytical strategy for Compendium Method TO-15 involves using a high resolution gas chromatograph (GC) coupled to a mass spectrometer. If the mass spectrometer is a linear quadrupole system, it is operated either by continuously scanning a wide range of mass to charge ratios (SCAN mode) or by monitoring select ion monitoring mode (SIM) of compounds on the target list. If the mass spectrometer is based on a standard ion trap design, only a scanning mode is used (note however, that the Selected Ion Storage (SIS) mode for the ion trap has features of the SIM mode). Mass spectra for individual peaks in the total ion chromatogram are examined with respect to the fragmentation pattern of ions corresponding to various VOCs including the intensity of primary and secondary ions. The fragmentation pattern is compared with stored spectra taken under similar conditions, in order to identify the compound. For any given compound, the intensity of the primary fragment is compared with the system response to the primary fragment for known amounts of the compound. This establishes the compound concentration that exists in the sample.

Mass spectrometry is considered a more definitive identification technique than single specific detectors such as flame ionization detector (FID), electron capture detector (ECD), photoionization detector (PID), or a multidetector arrangement of these (see discussion in Compendium Method TO-14A). The use of both gas chromatographic retention time and the generally unique mass fragmentation patterns reduce the chances for misidentification. If the technique is supported by a comprehensive mass spectral database and a knowledgeable operator, then the correct identification and quantification of VOCs is further enhanced.

3. Significance

3.1 Compendium Method TO-15 is significant in that it extends the Compendium Method TO-14A description for using canister-based sampling and gas chromatographic analysis in the following ways:

- Compendium Method TO-15 incorporates a multisorbent/dry purge technique or equivalent (see Appendix A) for water management thereby addressing a more extensive set of compounds (the VOCs mentioned in Title III of the CAAA of 1990) than addressed by Compendium Method TO-14A. Compendium Method TO-14A approach to water management alters the structure or reduces the sample stream concentration of some VOCs, especially water-soluble VOCs.
- Compendium Method TO-15 uses the GC/MS technique as the only means to identify and quantitate target compounds. The GC/MS approach provides a more scientifically-defensible detection scheme which is generally more desirable than the use of single or even multiple specific detectors.
- In addition, Compendium Method TO-15 establishes method performance criteria for acceptance of data, allowing the use of alternate but equivalent sampling and analytical equipment. There are several new and viable commercial approaches for water management as noted in Appendix A of this method on which to base a VOC monitoring technique as well as other approaches to sampling (i.e., autoGCs and solid adsorbents) that are often used. This method lists performance criteria that these alternatives must meet to be acceptable alternatives for monitoring ambient VOCs.
- Finally, Compendium Method TO-15 includes enhanced provisions for inherent quality control. The method uses internal analytical standards and frequent verification of analytical system performance to assure control of the analytical system. This more formal and better documented approach to quality control guarantees a higher percentage of good data.

3.2 With these features, Compendium Method TO-15 is a more general yet better defined method for VOCs than Compendium Method TO-14A. As such, the method can be applied with a higher confidence to reduce the uncertainty in risk assessments in environments where the hazardous volatile gases listed in the Title III of the Clean Air Act Amendments of 1990 are being monitored. An emphasis on risk assessments for human health and effects on the ecology is a current goal for the U.S. EPA.

4. Applicable Documents

4.1 ASTM Standards

- **Method D1356** *Definitions of Terms Relating to Atmospheric Sampling and Analysis.*
- **Method E260** *Recommended Practice for General Gas Chromatography Procedures.*
- **Method E355** *Practice for Gas Chromatography Terms and Relationships.*
- **Method D5466** *Standard Test Method of Determination of Volatile Organic Compounds in Atmospheres (Canister Sampling Methodology).*

4.2 EPA Documents

- *Quality Assurance Handbook for Air Pollution Measurement Systems, Volume II*, U. S. Environmental Protection Agency, EPA-600/R-94-038b, May 1994.
- *Technical Assistance Document for Sampling and Analysis of Toxic Organic Compounds in Ambient Air*, U. S. Environmental Protection Agency, EPA-600/4-83-027, June 1983.
- *Compendium of Methods for the Determination of Toxic Organic Compounds in Ambient Air: Method TO-14, Second Supplement*, U. S. Environmental Protection Agency, EPA-600/4-89-018, March 1989.
- *Statement-of-Work (SOW) for the Analysis of Air Toxics from Superfund Sites*, U. S. Environmental Protection Agency, Office of Solid Waste, Washington, D.C., Draft Report, June 1990.
- *Clean Air Act Amendments of 1990*, U. S. Congress, Washington, D.C., November 1990.

5. Definitions

[Note: Definitions used in this document and any user-prepared standard operating procedures (SOPs) should be consistent with ASTM Methods D1356, E260, and E355. Aside from the definitions given below, all pertinent abbreviations and symbols are defined within this document at point of use.]

5.1 **Gauge Pressure**—pressure measured with reference to the surrounding atmospheric pressure, usually expressed in units of kPa or psi. Zero gauge pressure is equal to atmospheric (barometric) pressure.

5.2 Absolute Pressure—pressure measured with reference to absolute zero pressure, usually expressed in units of kPa, or psi.

5.3 Cryogen—a refrigerant used to obtain sub-ambient temperatures in the VOC concentrator and/or on front of the analytical column. Typical cryogens are liquid nitrogen (bp -195.8°C), liquid argon (bp -185.7°C), and liquid CO_2 (bp -79.5°C).

5.4 Dynamic Calibration—calibration of an analytical system using calibration gas standard concentrations in a form identical or very similar to the samples to be analyzed and by introducing such standards into the inlet of the sampling or analytical system from a manifold through which the gas standards are flowing.

5.5 Dynamic Dilution—means of preparing calibration mixtures in which standard gas(es) from pressurized cylinders are continuously blended with humidified zero air in a manifold so that a flowing stream of calibration mixture is available at the inlet of the analytical system.

5.6 MS-SCAN—mass spectrometric mode of operation in which the gas chromatograph (GC) is coupled to a mass spectrometer (MS) programmed to SCAN all ions repeatedly over a specified mass range.

5.7 MS-SIM—mass spectrometric mode of operation in which the GC is coupled to a MS that is programmed to scan a selected number of ions repeatedly [i.e., selected ion monitoring (SIM) mode].

5.8 Qualitative Accuracy—the degree of measurement accuracy required to correctly identify compounds with an analytical system.

5.9 Quantitative Accuracy—the degree of measurement accuracy required to correctly measure the concentration of an identified compound with an analytical system with known uncertainty.

5.10 Replicate Precision—precision determined from two canisters filled from the same air mass over the same time period and determined as the absolute value of the difference between the analyses of canisters divided by their average value and expressed as a percentage (see Section 11 for performance criteria for replicate precision).

5.11 Duplicate Precision—precision determined from the analysis of two samples taken from the same canister. The duplicate precision is determined as the absolute value of the difference between the canister analyses divided by their average value and expressed as a percentage.

5.12 Audit Accuracy—the difference between the analysis of a sample provided in an audit canister and the nominal value as determined by the audit authority, divided by the audit value and expressed as a percentage (see Section 11 for performance criteria for audit accuracy).

6. Interferences and Contamination

6.1 Very volatile compounds, such as chloromethane and vinyl chloride can display peak broadening and co-elution with other species if the compounds are not delivered to the GC column in a small volume of carrier gas. Refocusing of the sample after collection on the primary trap, either on a separate focusing trap or at the head of the gas chromatographic column, mitigates this problem.

6.2 Interferences in canister samples may result from improper use or from contamination of: (1) the canisters due to poor manufacturing practices, (2) the canister cleaning apparatus, and (3) the sampling or analytical system. Attention to the following details will help to minimize the possibility of contamination of canisters.

6.2.1 Canisters should be manufactured using high quality welding and cleaning techniques, and new canisters should be filled with humidified zero air and then analyzed, after "aging" for 24 hours, to determine cleanliness. The cleaning apparatus, sampling system, and analytical system should be assembled of clean, high quality components and each system should be shown to be free of contamination.

6.2.2 Canisters should be stored in a contaminant-free location and should be capped tightly during shipment to prevent leakage and minimize any compromise of the sample.

6.2.3 Impurities in the calibration dilution gas (if applicable) and carrier gas, organic compounds out-gassing from the system components ahead of the trap, and solvent vapors in the laboratory account for the majority of contamination problems. The analytical system must be demonstrated to be free from contamination under the conditions of the analysis by running humidified zero air blanks. The use of non-chromatographic grade stainless steel tubing, non-PTFE thread sealants, or flow controllers with Buna-N rubber components must be avoided.

6.2.4 Significant contamination of the analytical equipment can occur whenever samples containing high VOC concentrations are analyzed. This in turn can result in carryover contamination in subsequent analyses. Whenever a high concentration (>25 ppbv of a trace species) sample is encountered, it should be followed by an analysis of humid zero air to check for carry-over contamination.

6.2.5 In cases when solid sorbents are used to concentrate the sample prior to analysis, the sorbents should be tested to identify artifact formation (see Compendium Method TO-17 for more information on artifacts).

7. Apparatus and Reagents

[Note: Compendium Method To-14A list more specific requirements for sampling and analysis apparatus which may be of help in identifying options. The listings below are generic.]

7.1 Sampling Apparatus

[Note: Subatmospheric pressure and pressurized canister sampling systems are commercially available and have been used as part of U.S. Environmental Protection Agency's Toxic Air Monitoring Stations (TAMS), Urban Air Toxic Monitoring Program (UATMP), the non-methane organic compound (NMOC) sampling and analysis program, and the Photochemical Assessment Monitoring Stations (PAMS).]

7.1.1 Subatmospheric Pressure (see Figure 1, without metal bellows type pump).

7.1.1.1 Sampling Inlet Line. Stainless steel tubing to connect the sampler to the sample inlet.

7.1.1.2 Sample Canister. Leak-free stainless steel pressure vessels of desired volume (e.g., 6 L), with valve and specially prepared interior surfaces (see Appendix B for a listing of known manufacturers/resellers of canisters).

7.1.1.3 Stainless Steel Vacuum/Pressure Gauges. Two types are required, one capable of measuring vacuum (-100 to 0 kPa or 0 to - 30 in Hg) and pressure (0–206 kPa or 0–30 psig) in the sampling system and a second type (for checking the vacuum of canisters during cleaning) capable of measuring at 0.05 mm Hg (see Appendix B) within 20%. Gauges should be tested clean and leak tight.

7.1.1.4 Electronic Mass Flow Controller. Capable of maintaining a constant flow rate (± 10%) over a sampling period of up to 24 hours and under conditions of changing temperature (20–40°C) and humidity.

7.1.1.5 Particulate Matter Filter. 2-μm sintered stainless steel in-line filter.

7.1.1.6 Electronic Timer. For unattended sample collection.

7.1.1.7 Solenoid Valve. Electrically-operated, bi-stable solenoid valve with Viton® seat and O-rings. A Skinner Magnelatch valve is used for purposes of illustration in the text (see Figure 2).

7.1.1.8 Chromatographic Grade Stainless Steel Tubing and Fittings. For interconnections. All such materials in contact with sample, analyte, and support gases prior to analysis should be chromatographic grade stainless steel or equivalent.

7.1.1.9 Thermostatically Controlled Heater. To maintain above ambient temperature inside insulated sampler enclosure.

7.1.1.10 Heater Thermostat. Automatically regulates heater temperature.

7.1.1.11 Fan. For cooling sampling system.

7.1.1.12 Fan Thermostat. Automatically regulates fan operation.

7.1.1.13 Maximum-Minimum Thermometer. Records highest and lowest temperatures during sampling period.

7.1.1.14 Stainless Steel Shut-off Valve. Leak free, for vacuum/pressure gauge.

7.1.1.15 Auxiliary Vacuum Pump. Continuously draws air through the inlet manifold at 10 L/min. or higher flow rate. Sample is extracted from the manifold at a lower rate, and excess air is exhausted.

[Note: The use of higher inlet flow rates dilutes any contamination present in the inlet and reduces the possibility of sample contamination as a result of contact with active adsorption sites on inlet walls.]

7.1.1.16 Elapsed Time Meter. Measures duration of sampling.

7.1.1.17 Optional Fixed Orifice, Capillary, or Adjustable Micrometering Valve. May be used in lieu of the electronic flow controller for grab samples or short duration time-integrated samples. Usually appropriate only in situations where screening samples are taken to assess future sampling activity.

7.1.2 Pressurized (see Figure 1 with metal bellows type pump and Figure 3).

7.1.2.1 Sample Pump. Stainless steel, metal bellows type, capable of 2 atmospheres output pressure. Pump must be free of leaks, clean, and uncontaminated by oil or organic compounds.

[Note: An alternative sampling system has been developed by Dr. R. Rasmussen, The Oregon Graduate Institute of Science and Technology, 20000 N.W. Walker Rd., Beaverton, Oregon 97006, 503-690-1077, and is illustrated in Figure 3. This flow system uses, in order, a pump, a mechanical flow regulator, and a mechanical compensation flow restrictive device. In this configuration the pump is purged with a large sample flow, thereby eliminating the need for an auxiliary vacuum pump to flush the sample inlet.]

7.1.2.2 Other Supporting Materials. All other components of the pressurized sampling system are similar to components discussed in Sections 7.1.1.1 through 7.1.1.17.

7.2 Analytical Apparatus

7.2.1 Sampling/Concentrator System (many commercial alternatives are available).

7.2.1.1 Electronic Mass Flow Controllers. Used to maintain constant flow (for purge gas, carrier gas and sample gas) and to provide an analog output to monitor flow anomalies.

7.2.1.2 Vacuum Pump. General purpose laboratory pump, capable of reducing the downstream pressure of the flow controller to provide the pressure differential necessary to maintain controlled flow rates of sample air.

7.2.1.3 Stainless Steel Tubing and Stainless Steel Fittings. Coated with fused silica to minimize active adsorption sites.

7.2.1.4 Stainless Steel Cylinder Pressure Regulators. Standard, two-stage cylinder regulators with pressure gauges.

7.2.1.5 Gas Purifiers. Used to remove organic impurities and moisture from gas streams.

7.2.1.6 Six-port Gas Chromatographic Valve. For routing sample and carrier gas flows.

7.2.1.7 Multisorbent Concentrator. Solid adsorbent packing with various retentive properties for adsorbing trace gases are commercially available from several sources. The packing contains more than one type of adsorbent packed in series.

7.2.1.7.1 A pre-packed adsorbent trap (Supelco 2-0321) containing 200 mg Carbopack B (60/80 mesh) and 50 mg Carbosieve S-III (60/80 mesh) has been found to retain VOCs and allow some water vapor to pass through (6). The addition of a dry purging step allows for further water removal from the adsorbent trap. The steps constituting the dry purge technique that are normally used with multisorbent traps are illustrated in Figure 4. The optimum trapping and dry purging procedure for the Supelco trap consists of a sample volume of 320 mL and a dry nitrogen purge of 1300 mL. Sample trapping and drying is carried out at 25°C. The trap is back-flushed with helium and heated to 220°C to transfer material onto the GC column. A trap bake-out at 260°C for 5 minutes is conducted after each run.

7.2.1.7.2 An example of the effectiveness of dry purging is shown in Figure 5. The multisorbent used in this case is Tenax/Ambersorb 340/Charcoal (7). Approximately 20% of the initial water content in the sample remains after sampling 500 mL of air. The detector response to water vapor (hydrogen atoms detected by atomic emission detection) is plotted versus purge gas volume. Additional water reduction by a factor of 8 is indicated at temperatures of 45°C or higher. Still further water reduction is possible using a two-stage concentration/dryer system.

7.2.1.8 Cryogenic Concentrator. Complete units are commercially available from several vendor sources. The characteristics of the latest concentrators include a rapid, "ballistic" heating of the concentrator to release any trapped VOCs into a small carrier gas volume. This facilitates the separation of compounds on the gas chromatographic column.

7.2.2 Gas Chromatographic/Mass Spectrometric (GC/MS) System.

7.2.2.1 Gas Chromatograph. The gas chromatographic (GC) system must be capable of temperature programming. The column oven can be cooled to subambient temperature (e.g., -50°C) at the start of the gas chromatographic run to effect a resolution of the very volatile organic compounds. In other designs, the rate of release of compounds from the focusing trap in a two stage system obviates the need for retrapping of compounds on the column. The system must include or be interfaced to a concentrator and have all required accessories including analytical columns and gases. All GC carrier gas lines must be constructed from stainless steel or copper tubing. Non-polytetrafluoroethylene (PTFE) thread sealants or flow controllers with Buna-N rubber components must not be used.

7.2.2.2 Chromatographic Columns. 100% methyl silicone or 5% phenyl, 95% methyl silicone fused silica capillary columns of 0.25- to 0.53-mm I.D. of varying lengths are recommended for separation of many of the possible subsets of target compounds involving nonpolar compounds. However, considering the diversity of the target list, the choice is left to the operator subject to the performance standards given in Section 11.

7.2.2.3 Mass Spectrometer. Either a linear quadrupole or ion trap mass spectrometer can be used as long as it is capable of scanning from 35 to 300 amu every 1 second or less, utilizing 70 volts (nominal) electron energy in the electron impact ionization mode, and producing a mass spectrum which meets all the instrument performance acceptance criteria when 50 ng or less of p-bromofluorobenzene (BFB) is analyzed.

7.2.2.3.1 Linear Quadrupole Technology. A simplified diagram of the heart of the quadrupole mass spectrometer is shown in Figure 6. The quadrupole consists of a parallel set of four rod electrodes mounted in a square configuration. The field within the analyzer is created by coupling opposite pairs of rods together and applying radiofrequency (RF) and direct current (DC) potentials between the pairs of rods. Ions created in the ion source from the reaction of column eluates with electrons from the electron source are moved through the

parallel array of rods under the influence of the generated field. Ions which are successfully transmitted through the quadrupole are said to possess stable trajectories and are subsequently recorded with the detection system. When the DC potential is zero, a wide band of m/z values is transmitted through the quadrupole. This "RF only" mode is referred to as the "total-ion" mode. In this mode, the quadrupole acts as a strong focusing lens analogous to a high pass filter. The amplitude of the RF determines the low mass cutoff. A mass spectrum is generated by scanning the DC and RF voltages using a fixed DC/RF ratio and a constant drive frequency or by scanning the frequency and holding the DC and RF constant. With the quadrupole system only 0.1 to 0.2 percent of the ions formed in the ion source actually reach the detector.

7.2.2.3.2Ion Trap Technology. An ion-trap mass spectrometer consists of a chamber formed between two metal surfaces in the shape of a hyperboloid of one sheet (ring electrode) and a hyperboloid of two sheets (the two end-cap electrodes). Ions are created within the chamber by electron impact from an electron beam admitted through a small aperture in one of the end caps. Radio frequency (RF) (and sometimes direct current voltage offsets) are applied between the ring electrode and the two end-cap electrodes establishing a quadrupole electric field. This field is uncoupled in three directions so that ion motion can be considered independently in each direction; the force acting upon an ion increases with the displacement of the ion from the center of the field but the direction of the force depends on the instantaneous voltage applied to the ring electrode. A restoring force along one coordinate (such as the distance, r, from the ion-trap's axis of radial symmetry) will exist concurrently with a repelling force along another coordinate (such as the distance, z, along the ion traps axis), and if the field were static the ions would eventually strike an electrode. However, in an RF field the force along each coordinate alternates direction so that a stable trajectory may be possible in which the ions do not strike a surface. In practice, ions of appropriate mass-to-charge ratios may be trapped within the device for periods of milliseconds to hours. A diagram of a typical ion trap is illustrated in Figure 7. Analysis of stored ions is performed by increasing the RF voltage, which makes the ions successively unstable. The effect of the RF voltage on the ring electrode is to "squeeze" the ions in the xy plane so that they move along the z axis. Half the ions are lost to the top cap (held at ground potential); the remaining ions exit the lower end cap to be detected by the electron multiplier. As the energy applied to the ring electrode is increased, the ions are collected in order of increasing mass to produce a conventional mass spectrum. With the ion trap, approximately 50 percent of the generated ions are detected. As a result, a significant increase in sensitivity can be achieved when compared to a full scan linear quadrupole system.

7.2.2.4 GC/MS Interface. Any gas chromatograph to mass spectrometer interface that gives acceptable calibration points for each of the analytes of interest and can be used to achieve all acceptable performance criteria may be used. Gas chromatograph to mass spectrometer interfaces constructed of all-glass, glass-lined, or fused silica-lined materials are recommended. Glass and fused silica should be deactivated.

7.2.2.5 Data System. The computer system that is interfaced to the mass spectrometer must allow the continuous acquisition and storage, on machine readable media, of all mass spectra obtained throughout the duration of the chromatographic program. The computer must have software that allows searching any GC/MS data file for ions of a specified mass and plotting such ion abundances versus time or scan number. This type of plot is defined as a Selected Ion Current Profile (SICP). Software must also be available that allows integrating the abundance in any SICP between specified time or scan number limits. Also, software must be available that allows for the comparison of sample spectra with reference library spectra. The National Institute of Standards and Technology (NIST) or Wiley Libraries or equivalent are recommended as reference libraries.

7.2.2.6 Off-line Data Storage Device. Device must be capable of rapid recording and retrieval of data and must be suitable for long-term, off-line data storage.

7.3 Calibration System and Manifold Apparatus (see Figure 8)

7.3.1 Calibration Manifold. Stainless steel, glass, or high purity quartz manifold, (e.g.,1.25-cm I.D. x 66-cm) with sampling ports and internal baffles for flow disturbance to ensure proper mixing. The manifold should be heated to ~50°C.

7.3.2 Humidifier. 500-mL impinger flask containing HPLC grade deionized water.

7.3.3 Electronic Mass Flow Controllers. One 0 to 5 L/min unit and one or more 0 to 100 mL/min units for air, depending on number of cylinders in use for calibration.

7.3.4 Teflon Filter(s). 47-mm Teflon® filter for particulate collection.

7.4 Reagents

7.4.1 Neat Materials or Manufacturer-Certified Solutions/Mixtures. Best source (see Section 9).

7.4.2 Helium and Air. Ultra-high purity grade in gas cylinders. He is used as carrier gas in the GC.

7.4.3 Liquid Nitrogen or Liquid Carbon Dioxide. Used to cool secondary trap.

7.4.4 Deionized Water. High performance liquid chromatography (HPLC) grade, ultra-high purity (for humidifier).

8. Collection of Samples in Canisters

8.1 Introduction

8.1.1 Canister samplers, sampling procedures, and canister cleaning procedures have not changed very much from the description given in the original Compendium Method TO-14. Much of the material in this section is therefore simply a restatement of the material given in Compendium Method TO-14, repeated here in order to have all the relevant information in one place.

8.1.2 Recent notable additions to the canister technology has been in the application of canister-based systems for example, to microenvironmental monitoring (8), the capture of breath samples (9), and sector sampling to identify emission sources of VOCs (10).

8.1.3 EPA has also sponsored the development of a mathematical model to predict the storage stability of arbitrary mixtures of trace gases in humidified air (3), and the investigation of the SilcoSteel™ process of coating the canister interior with a film of fused silica to reduce surface activity (11). A recent summary of storage stability data for VOCs in canisters is given in the open literature (5).

8.2 Sampling System Description

8.2.1 Subatmospheric Pressure Sampling [see Figure 1 (without metal bellows type pump)].

8.2.1.1 In preparation for subatmospheric sample collection in a canister, the canister is evacuated to 0.05 mm Hg (see Appendix C for discussion of evacuation pressure). When the canister is opened to the atmosphere containing the VOCs to be sampled, the differential pressure causes the sample to flow into the canister. This technique may be used to collect grab samples (duration of 10 to 30 seconds) or time-weighted-average (TWA) samples (duration of 1-24 hours) taken through a flow-restrictive inlet (e.g., mass flow controller, critical orifice).

8.2.1.2 With a critical orifice flow restrictor, there will be a decrease in the flow rate as the pressure approaches atmospheric. However, with a mass flow controller, the subatmospheric sampling system can maintain a constant flow rate from full vacuum to within about 7 kPa (1.0 psi) or less below ambient pressure.

8.2.2 Pressurized Sampling [see Figure 1 (with metal bellows type pump)].

8.2.2.1 Pressurized sampling is used when longer-term integrated samples or higher volume samples are required. The sample is collected in a canister using a pump and flow control arrangement to achieve a typical 101-202 kPa (15-30 psig) final canister pressure. For example, a 6-liter evacuated canister can be filled at 10 mL/min for 24 hours to achieve a final pressure of 144 kPa (21 psig).

8.2.2.2 In pressurized canister sampling, a metal bellows type pump draws in air from the sampling manifold to fill and pressurize the sample canister.

8.2.3 All Samplers.

8.2.3.1 A flow control device is chosen to maintain a constant flow into the canister over the desired sample period. This flow rate is determined so the canister is filled (to about 88.1 kPa for subatmospheric pressure sampling or to about one atmosphere above ambient pressure for pressurized sampling) over the desired sample period. The flow rate can be calculated by:

$$F = \frac{P \times V}{T \times 60}$$

where:

F = flow rate, mL/min.
P = final canister pressure, atmospheres absolute. P is approximately equal to

$$\frac{\text{kPa gauge}}{101.2} + 1$$

V = volume of the canister, mL.
T = sample period, hours.

For example, if a 6-L canister is to be filled to 202 kPa (2 atmospheres) absolute pressure in 24 hours, the flow rate can be calculated by:

$$F = \frac{2 \times 6000}{24 \times 60} = 8.3 \text{ mL/min}$$

8.2.3.2 For automatic operation, the timer is designed to start and stop the pump at appropriate times for the desired sample period. The timer must also control the solenoid valve, to open the valve when starting the pump and to close the valve when stopping the pump.

8.2.3.3 The use of the Skinner Magnelatch valve (see Figure 2) avoids any substantial temperature rise that would occur with a conventional, normally closed solenoid valve that would have to be energized during the entire sample period. The temperature rise in the valve could cause outgassing of organic compounds from the Viton® valve seat material. The Skinner Magnelatch valve requires only a brief electrical pulse to open or close at the appropriate start and stop times and therefore experiences no temperature increase. The pulses may be obtained either with an electronic timer that can be programmed for short (5 to 60 seconds) ON periods, or with a conventional mechanical timer and a special pulse circuit. A simple electrical pulse circuit for operating the Skinner Magnelatch solenoid valve with a conventional mechanical timer is illustrated in Figure 2(a). However, with this simple circuit, the valve may operate unreliably during brief power interruptions or if the timer is manually switched on and off too fast. A better circuit incorporating a time-delay relay to provide more reliable valve operation is shown in Figure 2(b).

8.2.3.4 The connecting lines between the sample inlet and the canister should be as short as possible to minimize their volume. The flow rate into the canister should remain relatively constant over the entire sampling period.

8.2.3.5 As an option, a second electronic timer may be used to start the auxiliary pump several hours prior to the sampling period to flush and condition the inlet line.

8.2.3.6 Prior to field use, each sampling system must pass a humid zero air certification (see Section 8.4.3). All plumbing should be checked carefully for leaks. The canisters must also pass a humid zero air certification before use (see Section 8.4.1).

8.3 Sampling Procedure

8.3.1 The sample canister should be cleaned and tested according to the procedure in Section 8.4.1.

8.3.2 A sample collection system is assembled as shown in Figures 1 and 3 and must be cleaned according to the procedure outlined in Sections 8.4.2 and 8.4.4.

[Note: The sampling system should be contained in an appropriate enclosure.]

8.3.3 Prior to locating the sampling system, the user may want to perform "screening analyses" using a portable GC system, as outlined in Appendix B of Compendium Method TO-14A, to determine potential volatile organics present and potential "hot spots." The information gathered from the portable GC screening analysis would be used in developing a monitoring protocol, which includes the sampling system location, based upon the "screening analysis" results.

8.3.4 After "screening analysis," the sampling system is located. Temperatures of ambient air and sampler box interior are recorded on the canister sampling field test data sheet (FTDS), as documented in Figure 9.

[Note: The following discussion is related to Figure 1]

8.3.5 To verify correct sample flow, a "practice" (evacuated) canister is used in the sampling system.

[Note: For a subatmospheric sampler, a flow meter and practice canister are needed. For the pump-driven system, the practice canister is not needed, as the flow can be measured at the outlet of the system.]

A certified mass flow meter is attached to the inlet line of the manifold, just in front of the filter. The canister is opened. The sampler is turned on and the reading of the certified mass flow meter is compared to the sampler mass flow controller. The values should agree within ±10%. If not, the sampler mass flow meter needs to be recalibrated or there is a leak in the system. This should be investigated and corrected.

[Note: Mass flow meter readings may drift. Check the zero reading carefully and add or subtract the zero reading when reading or adjusting the sampler flow rate to compensate for any zero drift.]

After 2 minutes, the desired canister flow rate is adjusted to the proper value (as indicated by the certified mass flow meter) by the sampler flow control unit controller (e.g., 3.5 mL/min for 24 hr, 7.0 mL/min for 12 hr). Record final flow under "CANISTER FLOW RATE" on the FTDS.

8.3.6 The sampler is turned off and the elapsed time meter is reset to 000.0.

[Note: Whenever the sampler is turned off, wait at least 30 seconds to turn the sampler back on.]

8.3.7 The "practice" canister and certified mass flow meter are disconnected and a clean certified (see Section 8.4.1) canister is attached to the system.

8.3.8 The canister valve and vacuum/pressure gauge valve are opened.

8.3.9 Pressure/vacuum in the canister is recorded on the canister FTDS (see Figure 9) as indicated by the sampler vacuum/pressure gauge.

8.3.10 The vacuum/pressure gauge valve is closed and the maximum-minimum thermometer is reset to current temperature. Time of day and elapsed time meter readings are recorded on the canister FTDS.

8.3.11 The electronic timer is set to start and stop the sampling period at the appropriate times. Sampling starts and stops by the programmed electronic timer.

8.3.12 After the desired sampling period, the maximum, minimum, current interior temperature and current ambient temperature are recorded on the FTDS. The current reading from the flow controller is recorded.

8.3.13 At the end of the sampling period, the vacuum/pressure gauge valve on the sampler is briefly opened and closed and the pressure/vacuum is recorded on the FTDS. Pressure should be close to desired pressure.

[Note: For a subatmospheric sampling system, if the canister is at atmospheric pressure when the field final pressure check is performed, the sampling period may be suspect. This information should be noted on the sampling field data sheet.]

Time of day and elapsed time meter readings are also recorded.

8.3.14 The canister valve is closed. The sampling line is disconnected from the canister and the canister is removed from the system. For a subatmospheric system, a certified mass flow meter is once again connected to the inlet manifold in front of the in-line filter and a "practice" canister is attached to the Magnelatch valve of the sampling system. The final flow rate is recorded on the canister FTDS (see Figure 9).

[Note: For a pressurized system, the final flow may be measured directly.]

The sampler is turned off.

8.3.15 An identification tag is attached to the canister. Canister serial number, sample number, location, and date, as a minimum, are recorded on the tag. The canister is routinely transported back to the analytical laboratory with other canisters in a canister shipping case.

8.4 Cleaning and Certification Program

8.4.1 Canister Cleaning and Certification.

8.4.1.1 All canisters must be clean and free of any contaminants before sample collection.

8.4.1.2 All canisters are leak tested by pressurizing them to approximately 206 kPa (30 psig) with zero air.

[Note: The canister cleaning system in Figure 10 can be used for this task.]

The initial pressure is measured, the canister valve is closed, and the final pressure is checked after 24 hours. If acceptable, the pressure should not vary more than ± 13.8 kPa (± 2 psig) over the 24 hour period.

8.4.1.3 A canister cleaning system may be assembled as illustrated in Figure 10. Cryogen is added to both the vacuum pump and zero air supply traps. The canister(s) are connected to the manifold. The vent shut-off valve and the canister valve(s) are opened to release any remaining pressure in the canister(s). The vacuum pump is started and the vent shut-off valve is then closed and the vacuum shut-off valve is opened. The canister(s) are evacuated to <0.05 mm Hg (see Appendix B) for at least 1 hour.

[Note: On a daily basis or more often if necessary, the cryogenic traps should be purged with zero air to remove any trapped water from previous canister cleaning cycles.]

Air released/evacuated from canisters should be diverted to a fume hood.

8.4.1.4 The vacuum and vacuum/pressure gauge shut-off valves are closed and the zero air shut-off valve is opened to pressurize the canister(s) with humid zero air to approximately 206 kPa (30 psig). If a zero gas generator system is used, the flow rate may need to be limited to maintain the zero air quality.

8.4.1.5 The zero air shut-off valve is closed and the canister(s) is allowed to vent down to atmospheric pressure through the vent shut-off valve. The vent shut-off valve is closed. Repeat Sections 8.4.1.3 through 8.4.1.5 two additional times for a total of three (3) evacuation/pressurization cycles for each set of canisters.

8.4.1.6 At the end of the evacuation/pressurization cycle, the canisters are pressurized to 206 kPa (30 psig) with humid zero air. The canister is then analyzed by a GC/MS analytical system. Any canister that has not tested clean (compared to direct analysis of humidified zero air of less than 0.2 ppbv of targeted VOCs) should not be used. As a "blank" check of the canister(s) and cleanup procedure, the final humid zero air fill of 100% of the canisters is analyzed until the cleanup system and canisters are proven reliable (less than 0.2 ppbv of any target VOCs). The check can then be reduced to a lower percentage of canisters.

8.4.1.7 The canister is reattached to the cleaning manifold and is then reevacuated to <0.05 mm Hg (see Appendix B) and remains in this condition until used. The canister valve is closed. The canister is removed from the cleaning system and the canister connection is capped with a stainless steel fitting. The canister is now ready for collection of an air sample. An identification tag is attached to the inlet of each canister for field notes and chain-of-custody purposes. An alternative to evacuating the canister at this point is to store the canisters and reevacuate them just prior to the next use.

8.4.1.8 As an option to the humid zero air cleaning procedures, the canisters are heated in an isothermal oven not to exceed 100°C during evacuation of the canister to ensure that higher molecular weight compounds are not retained on the walls of the canister.

[Note: For sampling more complex VOC mixtures the canisters should be heated to higher temperatures during the cleaning procedure although a special high temperature valve would be needed].

Once heated, the canisters are evacuated to <0.05 mm Hg (see Appendix B) and maintained there for 1 hour. At the end of the heated/evacuated cycle, the canisters are pressurized with humid zero air and analyzed by a GC/MS system after a minimum of 12 hrs of "aging." Any canister that has not tested clean (less than 0.2 ppbv each of targeted compounds) should not be used. Once tested clean, the canisters are reevacuated to <0.05 mm Hg (see Appendix B) and remain in the evacuated state until used. As noted in Section 8.4.1.7, reevacuation can occur just prior to the next use.

8.4.2 Cleaning Sampling System Components.

8.4.2.1 Sample components are disassembled and cleaned before the sampler is assembled. Nonmetallic parts are rinsed with HPLC grade deionized water and dried in a vacuum oven at 50°C. Typically, stainless steel parts and fittings are cleaned by placing them in a beaker of methanol in an ultrasonic bath for 15 minutes. This procedure is repeated with hexane as the solvent.

8.4.2.2 The parts are then rinsed with HPLC grade deionized water and dried in a vacuum oven at 100°C for 12 to 24 hours.

8.4.2.3 Once the sampler is assembled, the entire system is purged with humid zero air for 24 hours.

8.4.3 Zero Air Certification.

[Note: In the following sections, "certification" is defined as evaluating the sampling system with humid zero air and humid calibration gases that pass through all active components of the sampling system. The system is "certified" if no significant additions or deletions (less than 0.2 ppbv each of target compounds) have occurred when challenged with the test gas stream.]

8.4.3.1 The cleanliness of the sampling system is determined by testing the sampler with humid zero air without an evacuated gas sampling canister, as follows.

8.4.3.2 The calibration system and manifold are assembled, as illustrated in Figure 8. The sampler (without an evacuated gas canister) is connected to the manifold and the zero air cylinder is activated to generate a humid gas stream (2 L/min) to the calibration manifold [see Figure 8(b)].

8.4.3.3 The humid zero gas stream passes through the calibration manifold, through the sampling system (without an evacuated canister) to the water management system/VOC preconcentrator of an analytical system.

[Note: The exit of the sampling system (without the canister) replaces the canister in Figure 11.]

After the sample volume (e.g., 500 mL) is preconcentrated on the trap, the trap is heated and the VOCs are thermally desorbed and refocussed on a cold trap. This trap is heated and the VOCs are thermally desorbed onto the head of the capillary column. The VOCs are refocussed prior to gas chromatographic separation. Then, the oven temperature (programmed) increases and the VOCs begin to elute and are detected by a GC/MS (see Section 10) system. The analytical system should not detect greater than 0.2 ppbv of any targeted VOCs in order for the sampling system to pass the humid zero air certification test. Chromatograms (using an FID) of a certified sampler and contaminated sampler are illustrated in Figures 12(a) and 12(b), respectively. If the sampler passes the humid zero air test, it is then tested with humid calibration gas standards containing selected VOCs at concentration levels expected in field sampling (e.g., 0.5 to 2 ppbv) as outlined in Section 8.4.4.

8.4.4 Sampler System Certification with Humid Calibration Gas Standards from a Dynamic Calibration System

8.4.4.1 Assemble the dynamic calibration system and manifold as illustrated in Figure 8.

8.4.4.2 Verify that the calibration system is clean (less than 0.2 ppbv of any target compounds) by sampling a humidified gas stream, *without* gas calibration standards, with a previously certified clean canister (see Section 8.1).

8.4.4.3 The assembled dynamic calibration system is certified clean if less than 0.2 ppbv of any targeted compounds is found.

8.4.4.4 For generating the humidified calibration standards, the calibration gas cylinder(s) containing nominal concentrations of 10 ppmv in nitrogen of selected VOCs is attached to the calibration system as illustrated in Figure 8. The gas cylinders are opened and the gas mixtures are passed through 0 to 10 mL/min certified mass flow controllers to generate ppb levels of calibration standards.

8.4.4.5 After the appropriate equilibrium period, attach the sampling system (containing a certified evacuated canister) to the manifold, as illustrated in Figure 8(b).

8.4.4.6 Sample the dynamic calibration gas stream with the sampling system.

8.4.4.7 Concurrent with the sampling system operation, realtime monitoring of the calibration gas stream is accomplished by the on-line GC/MS analytical system [Figure 8(a)] to provide reference concentrations of generated VOCs.

8.4.4.8 At the end of the sampling period (normally the same time period used for experiments), the sampling system canister is analyzed and compared to the reference GC/MS analytical system to determine if the concentration of the targeted VOCs was increased or decreased by the sampling system.

8.4.4.9 A recovery of between 90% and 110% is expected for all targeted VOCs.

8.4.5 Sampler System Certification without Compressed Gas Cylinder Standards.

8.4.5.1 Not all the gases on the Title III list are available/compatible with compressed gas standards. In these cases sampler certification must be approached by different means.

8.4.5.2 Definitive guidance is not currently available in these cases; however, Section 9.2 lists several ways to generate gas standards. In general, Compendium Method TO-14A compounds (see Table 1) are available commercially as compressed gas standards.

9. GC/MS Analysis of Volatiles from Canisters

9.1 Introduction

9.1.1 The analysis of canister samples is accomplished with a GC/MS system. Fused silica capillary columns are used to achieve high temporal resolution of target compounds. Linear quadrupole or ion trap mass spectrometers are employed for compound detection. The heart of the system is composed of the sample inlet concentrating device that is needed to increase sample loading into a detectable range. Two examples of concentrating systems are discussed. Other approaches are acceptable as long as they are compatible with achieving the system performance criteria given in Section 11.

9.1.2 With the first technique, a whole air sample from the canister is passed through a multisorbent packing (including single adsorbent packings) contained within a metal or glass tube maintained at or above the surrounding air temperature. Depending on the water retention properties of the packing, some or most of the water vapor passes completely through the trap during sampling. Additional drying of the sample is accomplished after the sample concentration is completed by forward purging the trap with clean, dry helium or another inert gas (air is not used). The sample is then thermally desorbed from the packing and backflushed from the trap onto a gas chromatographic column. In some systems a "refocusing" trap is placed between the primary trap and the gas chromatographic column. The specific system design downstream of the primary trap depends on technical factors such as the rate of thermal desorption and sampled volume, but the objective in most cases is to enhance chromatographic resolution of the individual sample components before detection on a mass spectrometer.

9.1.3 Sample drying strategies depend on the target list of compounds. For some target compound lists, the multisorbent packing of the concentrator can be selected from hydrophobic adsorbents which allow a high percentage of water vapor in the sample to pass through the concentrator during sampling and without significant loss of the target compounds. However, if very volatile organic compounds are on the target list, the adsorbents required for their retention may also strongly retain water vapor and a more lengthy dry purge is necessary prior to analysis.

9.1.4 With the second technique, a whole air sample is passed through a concentrator where the VOCs are condensed on a reduced temperature surface (cold trap). Subsequently, the condensed gases are thermally desorbed and backflushed from the trap with an inert gas onto a gas chromatographic column. This concentration technique is similar to that discussed in Compendium Method TO-14, although a membrane dryer is not used. The sample size is reduced in volume to limit the amount of water vapor that is also collected (100 mL or less may be necessary). The attendant reduction in sensitivity is offset by enhancing the sensitivity of detection, for example by using an ion trap detector.

9.2 Preparation of Standards

9.2.1 Introduction.

9.2.1.1 When available, standard mixtures of target gases in high pressure cylinders must be certified traceable to a NIST Standard Reference Material (SRM) or to a NIST/EPA approved Certified Reference Material (CRM). Manufacturer's certificates of analysis must be retained to track the expiration date.

9.2.1.2 The neat standards that are used for making trace gas standards must be of high purity; generally a purity of 98 percent or better is commercially available.

9.2.1.3 Cylinder(s) containing approximately 10 ppmv of each of the target compounds are typically used as primary stock standards. The components may be purchased in one cylinder or in separate cylinders depending on compatibility of the compounds and the pressure of the mixture in the cylinder. Refer to manufacturer's specifications for guidance on purchasing and mixing VOCs in gas cylinders.

9.2.2 Preparing Working Standards.

9.2.2.1 Instrument Performance Check Standard. Prepare a standard solution of BFB in humidified zero air at a concentration which will allow collection of 50 ng of BFB or less under the optimized concentration parameters.

9.2.2.2 Calibration Standards. Prepare five working calibration standards in humidified zero air at a concentration which will allow collection at the 2, 5, 10, 20, and 50 ppbv level for each component under the optimized concentration parameters.

9.2.2.3 Internal Standard Spiking Mixture. Prepare an internal spiking mixture containing bromochloromethane, chlorobenzene-d_5, and 1,4-difluorobenzene at 10 ppmv each in humidified zero air to be added to the sample or calibration standard. 500 µL of this mixture spiked into 500 mL of sample will result in a concentration of 10 ppbv. The internal standard is introduced into the trap during the collection time for all calibration, blank, and sample analyses using the apparatus shown in Figure 13 or by equivalent means. The volume of internal standard spiking mixture added for each analysis must be the same from run to run.

9.2.3 Standard Preparation by Dynamic Dilution Technique.

9.2.3.1 Standards may be prepared by dynamic dilution of the gaseous contents of a cylinder(s) containing the gas calibration stock standards with humidified zero air using mass flow controllers and a calibration manifold. The working standard may be delivered from the manifold to a clean, evacuated canister using a pump and mass flow controller.

9.2.3.2 Alternatively, the analytical system may be calibrated by sampling directly from the manifold if the flow rates are optimized to provide the desired amount of calibration standards. However, the use of the canister as a reservoir prior to introduction into the concentration system resembles the procedure normally used to collect samples and is preferred. Flow rates of the dilution air and cylinder standards (all expressed in the same units) are measured using a bubble meter or calibrated electronic flow measuring device, and the concentrations of target compounds in the manifold are then calculated using the dilution ratio and the original concentration of each compound.

$$\text{Manifold Conc.} = \frac{\text{(Original Conc.) (Std. Gas Flowrate)}}{\text{(Air Flowrate) + (Std. Gas Flowrate)}}$$

9.2.3.3 Consider the example of 1 mL/min flow of 10 ppmv standard diluted with 1,000 mL/min of humid air provides a nominal 10 ppbv mixture, as calculated below:

$$\text{Manifold Conc.} = \frac{\text{(10 ppm)(1 mL/min)(1000 ppb/1 ppm)}}{\text{(1000 mL/min) + (1 mL/min)}} = 10 \text{ ppb}$$

9.2.4 Standard Preparation by Static Dilution Bottle Technique

[Note: Standards may be prepared in canisters by spiking the canister with a mixture of components prepared in a static dilution bottle (12). This technique is used specifically for liquid standards.]

9.2.4.1 The volume of a clean 2-liter round-bottom flask, modified with a threaded glass neck to accept a Mininert septum cap, is determined by weighing the amount of water required to completely fill up the flask. Assuming a density for the water of 1 g/mL, the weight of the water in grams is taken as the volume of the flask in milliliters.

9.2.4.2 The flask is flushed with helium by attaching a tubing into the glass neck to deliver the helium. After a few minutes, the tubing is removed and the glass neck is immediately closed with a Mininert septum cap.

9.2.4.3 The flask is placed in a 60°C oven and allowed to equilibrate at that temperature for about 15 minutes. Predetermined aliquots of liquid standards are injected into the flask making sure to keep the flask temperature constant at 60°C.

9.2.4.4 The contents are allowed to equilibrate in the oven for at least 30 minutes. To avoid condensation, syringes must be preheated in the oven at the same temperature prior to withdrawal of aliquots to avoid condensation.

9.2.4.5 Sample aliquots may then be taken for introduction into the analytical system or for further dilution. An aliquot or aliquots totaling greater than 1 percent of the flask volume should be avoided.

9.2.4.6 Standards prepared by this method are stable for one week. The septum must be replaced with each freshly prepared standard.

9.2.4.7 The concentration of each component in the flask is calculated using the following equation:

$$\text{Concentration, mg/L} = \frac{(V_a)(d)}{V_f}$$

where: V_a = Volume of liquid neat standard injected into the flask, µL.
d = Density of the liquid neat standard, mg/µL.
V_f = Volume of the flask, L.

9.2.4.8 To obtain concentrations in ppbv, the equation given in Section 9.2.5.7 can be used.

[Note: In the preparation of standards by this technique, the analyst should make sure that the volume of neat standard injected into the flask does not result in an overpressure due to the higher partial pressure produced by the standard compared to the vapor pressure in the flask. Precautions should also be taken to avoid a significant decrease in pressure inside the flask after withdrawal of aliquot(s).]

9.2.5 Standard Preparation Procedure in High Pressure Cylinders

[Note: Standards may be prepared in high pressure cylinders (13). A modified summary of the procedure is provided below.]

9.2.5.1 The standard compounds are obtained as gases or neat liquids (greater than 98 percent purity).

9.2.5.2 An aluminum cylinder is flushed with high-purity nitrogen gas and then evacuated to better than 25 in. Hg.

9.2.5.3 Predetermined amounts of each neat standard compound are measured using a microliter or gastight syringe and injected into the cylinder. The cylinder is equipped with a heated injection port and nitrogen flow to facilitate sample transfer.

9.2.5.4 The cylinder is pressurized to 1000 psig with zero nitrogen.

[Note: User should read all SOPs associated with generating standards in high pressure cylinders. Follow all safety requirements to minimize danger from high pressure cylinders.]

9.2.5.5 The contents of the cylinder are allowed to equilibrate (~24 hrs) prior to withdrawal of aliquots into the GC system.

9.2.5.6 If the neat standard is a gas, the cylinder concentration is determined using the following equation:

$$\text{Concentration, ppbv} = \frac{\text{Volume}_{\text{standard}}}{\text{Volume}_{\text{dilution gas}}} \times 10^9$$

[Note: Both values must be expressed in the same units.]

9.2.5.7 If the neat standard is a liquid, the gaseous concentration can be determined using the following equations:

$$V = \frac{nRT}{P}$$

and:

$$n = \frac{(mL)(d)}{MW}$$

where:
- V = Gaseous volume of injected compound at EPA standard temperature (25°C) and pressure (760 mm Hg), L.
- n = Moles.
- R = Gas constant, 0.08206 L-atm/mole °K.
- T = 298°K (standard temperature).
- P = 1 standard pressure, 760 mm Hg (1 atm).
- mL = Volume of liquid injected, mL.
- d = Density of the neat standard, g/mL.
- MW = Molecular weight of the neat standard expressed, g/g-mole.

The gaseous volume of the injected compound is divided by the cylinder volume at STP and then multiplied by 10^9 to obtain the component concentration in ppb units.

9.2.6 Standard Preparation by Water Methods.

[Note: Standards may be prepared by a water purge and trap method (14) and summarized as follows].

9.2.6.1 A previously cleaned and evacuated canister is pressurized to 760 mm Hg absolute (1 atm) with zero grade air.

9.2.6.2 The air gauge is removed from the canister and the sparging vessel is connected to the canister with the short length of 1/16 in. stainless steel tubing.

[Note: Extra effort should be made to minimize possible areas of dead volume to maximize transfer of analytes from the water to the canister.]

9.2.6.3 A measured amount of the stock standard solution and the internal standard solution is spiked into 5 mL of water.

9.2.6.4 This water is transferred into the sparge vessel and purged with nitrogen for 10 mins at 100 mL/min. The sparging vessel is maintained at 40°C.

9.2.6.5 At the end of 10 mins, the sparge vessel is removed and the air gauge is re-installed, to further pressurize the canister with pure nitrogen to 1500 mm Hg absolute pressure (approximately 29 psia).

9.2.6.6 The canister is allowed to equilibrate overnight before use.

9.2.6.7 A schematic of this approach is shown in Figure 14.

9.2.7 Preparation of Standards by Permeation Tubes.

9.2.7.1 Permeation tubes can be used to provide standard concentration of a trace gas or gases. The permeation of the gas can occur from inside a permeation tube containing the trace species of interest to an air stream outside. Permeation can also occur from outside a permeable membrane tube to an air stream passing through the tube (e.g., a tube of permeable material immersed in a liquid).

9.2.7.2 The permeation system is usually held at a constant temperature to generate a constant concentration of trace gas. Commercial suppliers provide systems for generation and dilution of over 250 compounds. Some commercial suppliers of permeation tube equipment are listed in Appendix D.

9.2.8 Storage of Standards.

9.2.8.1 Working standards prepared in canisters may be stored for thirty days in an atmosphere free of potential contaminants.

9.2.8.2 It is imperative that a storage logbook be kept to document storage time.

10. GC/MS Operating Conditions

10.1 Preconcentrator

The following are typical cryogenic and adsorbent preconcentrator analytical conditions which, however, depend on the specific combination of solid sorbent and must be selected carefully by the operator. The reader is referred to Tables 1 and 2 of Compendium Method TO-17 for guidance on selection of sorbents. An example of a system using a solid adsorbent preconcentrator with a cryofocusing trap is discussed in the literature (15). Oven temperature programming starts above ambient.

10.1.1 Sample Collection Conditions

Cryogenic Trap	Adsorbent Trap

Set point	-150°C	Set point	27°C
Sample volume	- up to 100 mL	Sample volume	- up to 1,000 mL
Carrier gas purge flow	- none	Carrier gas purge flow	- selectable

[Note: The analyst should optimize the flow rate, duration of sampling, and absolute sample volume to be used. Other preconcentration systems may be used provided performance standards (see Section 11) are realized.]

10.1.2 Desorption Conditions

Cryogenic Trap		Adsorbent Trap	
Desorb Temperature	120°C	Desorb Temperature	Variable
Desorb Flow Rate	~ 3 mL/min He	Desorb Flow Rate	~3 mL/min He
Desorb Time	<60 sec	Desorb Time	<60 sec

The adsorbent trap conditions depend on the specific solid adsorbents chosen (see manufacturers' specifications).

10.1.3 Trap Reconditioning Conditions.

Cryogenic Trap		Adsorbent Trap	
Initial bakeout	120°C (24 hrs)	Initial bakeout	
Variable (24 hrs)			
After each run	120°C (5 min)	After each run	Variable (5 min)

10.2 GC/MS System

10.2.1 Optimize GC conditions for compound separation and sensitivity. Baseline separation of benzene and carbon tetrachloride on a 100% methyl polysiloxane stationary phase is an indication of acceptable chromatographic performance.

10.2.2 The following are the recommended gas chromatographic analytical conditions when using a 50-meter by 0.3-mm I.D., 1 µm film thickness fused silica column with refocusing on the column.

Item	Condition	
Carrier Gas:	Helium	
Flow Rate:	Generally 1-3 mL/min as recommended by manufacturer	
Temperature Program:	Initial Temperature:	-50°C
	Initial Hold Time:	2 min
	Ramp Rate:	8° C/min
	Final Temperature:	200°C
	Final Hold Time:	Until all target compounds elute.

10.2.3 The following are the recommended mass spectrometer conditions:

Item	Condition

Electron Energy:	70 Volts (nominal)
Mass Range:	35-300 amu [the choice of 35 amu excludes the detection of some target compounds such as methanol and formaldehyde, and the quantitation of others such as ethylene oxide, ethyl carbamate, etc. (see Table 2). Lowering the mass range and using special programming features available on modern gas chromatographs will be necessary in these cases, but are not considered here.
Scan Time:	To give at least 10 scans per peak, not to exceed 1 second per scan].

A schematic for a typical GC/MS analytical system is illustrated in Figure 15.

10.3 Analytical Sequence

10.3.1 Introduction. The recommended GC/MS analytical sequence for samples during each 24-hour time period is as follows:

- Perform instrument performance check using bromofluorobenzene (BFB).
- Initiate multi-point calibration or daily calibration checks.
- Perform a laboratory method blank.
- Complete this sequence for analysis of ≤20 field samples.

10.4 Instrument Performance Check

10.4.1 Summary. It is necessary to establish that a given GC/MS meets tuning and standard mass spectral abundance criteria prior to initiating any data collection. The GC/MS system is set up according to the manufacturer's specifications, and the mass calibration and resolution of the GC/MS system are then verified by the analysis of the instrument performance check standard, bromofluorobenzene (BFB).

10.4.2 Frequency. Prior to the analyses of any samples, blanks, or calibration standards, the Laboratory must establish that the GC/MS system meets the mass spectral ion abundance criteria for the instrument performance check standard containing BFB. The instrument performance check solution must be analyzed initially and once per 24-hour time period of operation.

The 24-hour time period for GC/MS instrument performance check and standards calibration (initial calibration or daily calibration check criteria) begins at the injection of the BFB which the laboratory records as documentation of a compliance tune.

10.4.3 Procedure. The analysis of the instrument performance check standard is performed by trapping 50 ng of BFB under the optimized preconcentration parameters. The BFB is introduced from a cylinder into the GC/MS via a sample loop valve injection system similar to that shown in Figure 13.

The mass spectrum of BFB must be acquired in the following manner. Three scans (the peak apex scan and the scans immediately preceding and following the apex) are acquired and averaged. Background subtraction is conducted using a single scan prior to the elution of BFB.

10.4.4 Technical Acceptance Criteria. Prior to the analysis of any samples, blanks, or calibration standards, the analyst must establish that the GC/MS system meets the mass spectral ion abundance criteria for the instrument performance check standard as specified in Table 3.

10.4.5 Corrective Action. If the BFB acceptance criteria are not met, the MS must be retuned. It may be necessary to clean the ion source, or quadrupoles, or take other necessary actions to achieve the acceptance criteria.

10.4.6 Documentation. Results of the BFB tuning are to be recorded and maintained as part of the instrumentation log.

10.5 Initial Calibration

10.5.1 Summary. Prior to the analysis of samples and blanks but after the instrument performance check standard criteria have been met, each GC/MS system must be calibrated at five concentrations that span the monitoring range of interest in an initial calibration sequence to determine instrument sensitivity and the linearity of GC/MS response for the target compounds. For example, the range of interest may be 2 to 20 ppbv, in which case the five concentrations would be 1, 2, 5, 10 and 25 ppbv.

One of the calibration points from the initial calibration curve must be at the same concentration as the daily calibration standard (e.g., 10 ppbv).

10.5.2 Frequency. Each GC/MS system must be recalibrated following corrective action (e.g., ion source cleaning or repair, column replacement, etc.) which may change or affect the initial calibration criteria or if the daily calibration acceptance criteria have not been met.

If time remains in the 24-hour time period after meeting the acceptance criteria for the initial calibration, samples may be analyzed.

If time does not remain in the 24-hour period after meeting the acceptance criteria for the initial calibration, a new analytical sequence shall commence with the analysis of the instrument performance check standard followed by analysis of a daily calibration standard.

10.5.3 Procedure. Verify that the GC/MS system meets the instrument performance criteria in Section 10.4.

The GC must be operated using temperature and flow rate parameters equivalent to those in Section 10.2.2. Calibrate the preconcentration-GC/MS system by drawing the standard into the system. Use one of the standards preparation techniques described under Section 9.2 or equivalent.

A minimum of five concentration levels are needed to determine the instrument sensitivity and linearity. One of the calibration levels should be near the detection level for the compounds of interest. The calibration range should be chosen so that linear results are obtained as defined in Sections 10.5.1 and 10.5.5.

Quantitation ions for the target compounds are shown in Table 2. The primary ion should be used unless interferences are present, in which case a secondary ion is used.

10.5.4 Calculations.

[Note: In the following calculations, an internal standard approach is used to calculate response factors. The area response used is that of the primary quantitation ion unless otherwise stated.]

10.5.4.1 Relative Response Factor (RRF). Calculate the relative response factors for each target compound relative to the appropriate internal standard (i.e., standard with the nearest retention time) using the following equation:

$$RRF = \frac{A_x C_{is}}{A_{is} C_x}$$

where: RRF = Relative response factor.
A_x = Area of the primary ion for the compound to be measured, counts.
A_{is} = Area of the primary ion for the internal standard, counts.
C_{is} = Concentration of internal standard spiking mixture, ppbv.
C_x = Concentration of the compound in the calibration standard, ppbv.

[Note: The equation above is valid under the condition that the volume of internal standard spiking mixture added in all field and QC analyses is the same from run to run, and that the volume of field and QC sample introduced into the trap is the same for each analysis. C_{is} and C_x must be in the same units.]

10.5.4.2 Mean Relative Response Factor. Calculate the mean RRF for each compound by averaging the values obtained at the five concentrations using the following equation:

$$\overline{RRF} = \sum_{i=1}^{n} \frac{x_i}{n}$$

where: $\overline{RRF}$ = Mean relative response factor.
x_i = RRF of the compound at concentration i.
n = Number of concentration values, in this case 5.

10.5.4.3 Percent Relative Standard Deviation (%RSD). Using the RRFs from the initial calibration, calculate the %RSD for all target compounds using the following equations:

$$\%RSD = \frac{SD_{RRF}}{\overline{RRF}} \times 100$$

and

$$SD_{RRF} = \sqrt{\sum_{i=1}^{N} \frac{(RRF_i - \overline{RRF})^2}{N - 1}}$$

where: SD_{RRF} = Standard deviation of initial response factors (per compound).
RRF_i = Relative response factor at a concentration level i.
$\overline{RRF}$ = Mean of initial relative response factors (per compound).

10.5.4.4 Relative Retention Times (RRT). Calculate the RRTs for each target compound over the initial calibration range using the following equation:

$$RRT = \frac{RT_c}{RT_{is}}$$

where: RT_c = Retention time of the target compound, seconds
RT_{is} = Retention time of the internal standard, seconds.

10.5.4.5 Mean of the Relative Retention Times ($\overline{RRT}$). Calculate the mean of the relative retention times ($\overline{RRT}$) for each analyte target compound over the initial calibration range using the following equation:

$$\overline{RRT} = \sum_{i=1}^{n} \frac{RRT}{n}$$

where: $\overline{RRT}$ = Mean relative retention time for the target compound for each initial calibration standard.

RRT = Relative retention time for the target compound at each calibration level.

10.5.4.6 Tabulate Primary Ion Area Response (Y) for Internal Standard. Tabulate the area response (Y) of the primary ions (see Table 2) and the corresponding concentration for each compound and internal standard.

10.5.4.7 Mean Area Response ($\overline{Y}$) for Internal Standard. Calculate the mean area response ($\overline{Y}$) for each internal standard compound over the initial calibration range using the following equation:

$$\overline{Y} = \sum_{i=1}^{n} \frac{Y_i}{n}$$

where: $\overline{Y}$ = Mean area response.

Y = Area response for the primary quantitation ion for the internal standard for each initial calibration standard.

10.5.4.8 Mean Retention Times ($\overline{RT}$). Calculate the mean of the retention times ($\overline{RT}$) for each internal standard over the initial calibration range using the following equation:

$$\overline{RT} = \sum_{i=1}^{n} \frac{RT_i}{n}$$

where: $\overline{RT}$ = Mean retention time, seconds

RT = Retention time for the internal standard for each initial calibration standard, seconds.

10.5.5 Technical Acceptance Criteria for the Initial Calibration.

10.5.5.1 The calculated %RSD for the RRF for each compound in the calibration table must be less than 30% with at most two exceptions up to a limit of 40%.

[Note: This exception may not be acceptable for all projects. Many projects may have a specific target list of compounds which would require the lower limit for all compounds.]

10.5.5.2 The RRT for each target compound at each calibration level must be within 0.06 RRT units of the mean RRT for the compound.

10.5.5.3 The area response Y of at each calibration level must be within 40% of the mean area response $\overline{Y}$ over the initial calibration range for each internal standard.

10.5.5.4 The retention time shift for each of the internal standards at each calibration level must be within 20 s of the mean retention time over the initial calibration range for each internal standard.

10.5.6 Corrective Action.

10.5.6.1 Criteria. If the initial calibration technical acceptance criteria are not met, inspect the system for problems. It may be necessary to clean the ion source, change the column, or take other corrective actions to meet the initial calibration technical acceptance criteria.

10.5.6.2 Schedule. Initial calibration acceptance criteria *must* be met before any field samples, performance evaluation (PE) samples, or blanks are analyzed.

10.6 Daily Calibration

10.6.1 Summary. Prior to the analysis of samples and blanks but after tuning criteria have been met, the initial calibration of each GC/MS system must be routinely checked by analyzing a daily calibration standard to ensure that the instrument continues to remain under control. The daily calibration standard, which is the nominal 10 ppbv level calibration standard, should contain all the target compounds.

10.6.2 Frequency. A check of the calibration curve must be performed once every 24 hours on a GC/MS system that has met the tuning criteria. The daily calibration sequence starts with the injection of the BFB. If the BFB analysis meets the ion abundance criteria for BFB, then a daily calibration standard may be analyzed.

10.6.3 Procedure. The mid-level calibration standard (10 ppbv) is analyzed in a GC/MS system that has met the tuning and mass calibration criteria following the same procedure in Section 10.5.

10.6.4 Calculations. Perform the following calculations.

[Note: As indicated earlier, the area response of the primary quantitation ion is used unless otherwise stated.]

10.6.4.1 Relative Response Factor (RRF). Calculate a relative response factor (RRF) for each target compound using the equation in Section 10.5.4.1.

10.6.4.2 Percent Difference (%D). Calculate the percent difference in the RRF of the daily RRF (24-hour) compared to the mean RRF in the most recent initial calibration. Calculate the %D for each target compound using the following equation:

$$\%D = \frac{RRF_c - \overline{RRF_i}}{\overline{RRF_i}} \times 100$$

where: RRF_c = RRF of the compound in the continuing calibration standard.

$\overline{RRF_i}$ = Mean RRF of the compound in the most recent initial calibration.

10.6.5 Technical Acceptance Criteria. The daily calibration standard must be analyzed at the concentration level and frequency described in this Section 10.6 and on a GC/MS system meeting the BFB instrument performance check criteria (see Section 10.4).

The %D for each target compound in a daily calibration sequence must be within ±30 percent in order to proceed with the analysis of samples and blanks. A control chart showing %D values should be maintained.

10.6.6 Corrective Action. If the daily calibration technical acceptance criteria are not met, inspect the system for problems. It may be necessary to clean the ion source, change the column, or take other corrective actions to meet the daily calibration technical acceptance criteria.

Daily calibration acceptance criteria must be met before any field samples, performance evaluation (PE) samples, or blanks are analyzed. If the % D criteria are not met, it will be necessary to rerun the daily calibration sample.

10.7 Blank Analyses

10.7.1 Summary. To monitor for possible laboratory contamination, laboratory method blanks are analyzed at least once in a 24-hour analytical sequence. All steps in the analytical procedure are performed on the blank

using all reagents, standards, equipment, apparatus, glassware, and solvents that would be used for a sample analysis.

A laboratory method blank (LMB) is an unused, certified canister that has not left the laboratory. The blank canister is pressurized with humidified, ultra-pure zero air and carried through the same analytical procedure as a field sample. The injected aliquot of the blank must contain the same amount of internal standards that are added to each sample.

10.7.2 Frequency. The laboratory method blank must be analyzed after the calibration standard(s) and before any samples are analyzed.

Whenever a high concentration sample is encountered (i.e., outside the calibration range), a blank analysis should be performed immediately after the sample is completed to check for carryover effects.

10.7.3 Procedure. Fill a cleaned and evacuated canister with humidified zero air (RH >20 percent, at 25°C). Pressurize the contents to 2 atm.

The blank sample should be analyzed using the same procedure outlined under Section 10.8.

10.7.4 Calculations. The blanks are analyzed similar to a field sample and the equations in Section 10.5.4 apply.

10.7.5 Technical Acceptance Criteria. A blank canister should be analyzed daily.

The area response for each internal standard (IS) in the blank must be within ±40 percent of the mean area response of the IS in the most recent valid calibration.

The retention time for each of the internal standards must be within ±0.33 minutes between the blank and the most recent valid calibration.

The blank should not contain any target analyte at a concentration greater than its quantitation level (three times the MDL as defined in Section 11.2) and should not contain additional compounds with elution characteristics and mass spectral features that would interfere with identification and measurement of a method analyte.

10.7.6 Corrective Action. If the blanks do not meet the technical acceptance criteria, the analyst should consider the analytical system to be out of control. It is the responsibility of the analyst to ensure that contaminants in solvents, reagents, glassware, and other sample storage and processing hardware that lead to discrete artifacts and/or elevated baselines in gas chromatograms be eliminated. If contamination is a problem, the source of the contamination must be investigated and appropriate corrective measures need to be taken and documented before further sample analysis proceeds.

If an analyte in the blank is found to be out of control (i.e., contaminated) and the analyte is also found in associated samples, those sample results should be "flagged" as possibly contaminated.

10.8 Sample Analysis

10.8.1 Summary. An aliquot of the air sample from a canister (e.g., 500 mL) is preconcentrated and analyzed by GC/MS under conditions stated in Sections 10.1 and 10.2. If using the multisorbent/dry purge approach, adjust the dry purge volume to reduce water effects in the analytical system to manageable levels.

[Note: The analyst should be aware that pressurized samples of high humidity samples will contain condensed water. As a result, the humidity of the sample released from the canister during analysis will vary

in humidity, being lower at the higher canister pressures and increasing in humidity as the canister pressures decreases. Storage integrity of water soluble compounds may also be affected.]

10.8.2 Frequency. If time remains in the 24-hour period in which an initial calibration is performed, samples may be analyzed without analysis of a daily calibration standard.

If time does not remain in the 24-hour period since the injection of the instrument performance check standard in which an initial calibration is performed, both the instrument performance check standard and the daily calibration standard should be analyzed before sample analysis may begin.

10.8.3 Procedure for Instrumental Analysis. Perform the following procedure for analysis.

10.8.3.1 All canister samples should be at temperature equilibrium with the laboratory.

10.8.3.2 Check and adjust the mass flow controllers to provide correct flow rates for the system.

10.8.3.3 Connect the sample canister to the inlet of the GC/MS analytical system, as shown in Figure 15 [Figure 16 shows an alternate two stage concentrator using multisorbent traps followed by a trap cooled by a closed cycle cooler (15)]. The desired sample flow is established through the six-port chromatographic valve and the preconcentrator to the downstream flow controller. The absolute volume of sample being pulled through the trap must be consistent from run to run.

10.8.3.4 Heat/cool the GC oven and cryogenic or adsorbent trap to their set points. Assuming a six-port value is being used, as soon as the trap reaches its lower set point, the six-port chromatographic valve is cycled to the trap position to begin sample collection. Utilize the sample collection time which has been optimized by the analyst.

10.8.3.5 Use the arrangement shown in Figure 13, (i.e., a gastight syringe or some alternate method) introduce an internal standard during the sample collection period. Add sufficient internal standard equivalent to 10 ppbv in the sample. For example, a 0.5 mL volume of a mixture of internal standard compounds, each at 10 ppmv concentration, added to a sample volume of 500 mL, will result in 10 ppbv of each internal standard in the sample.

10.8.3.6 After the sample and internal standards are preconcentrated on the trap, the GC sampling valve is cycled to the inject position and the trap is swept with helium and heated. Assuming a focusing trap is being used, the trapped analytes are thermally desorbed onto a focusing trap and then onto the head of the capillary column and are separated on the column using the GC oven temperature program. The canister valve is closed and the canister is disconnected from the mass flow controller and capped. The trap is maintained at elevated temperature until the beginning of the next analysis.

10.8.3.7 Upon sample injection onto the column, the GC/MS system is operated so that the MS scans the atomic mass range from 35 to 300 amu. At least ten scans per eluting chromatographic peak should be acquired. Scanning also allows identification of unknown compounds in the sample through searching of library spectra.

10.8.3.8 Each analytical run must be checked for saturation. The level at which an individual compound will saturate the detection system is a function of the overall system sensitivity and the mass spectral characteristics of that compound.

10.8.3.9 Secondary ion quantitation is allowed only when there are sample matrix interferences with the primary ion. If secondary ion quantitation is performed, document the reasons in the laboratory record book.

10.8.4 Calculations. The equation below is used for calculating concentrations.

$$C_x = \frac{A_x C_{is} DF}{A_{is} \overline{RRF}}$$

where: C_x = Compound concentration, ppbv.

A_x = Area of the characteristic ion for the compound to be measured, counts.

A_{is} = Area of the characteristic ion for the specific internal standard, counts.

C_{is} = Concentration of the internal standard spiking mixture, ppbv

$\overline{RRF}$ = Mean relative response factor from the initial calibration.

DF = Dilution factor calculated as described in section 2. If no dilution is performed, DF = 1.

[Note: The equation above is valid under the condition that the volume (~500 µL) of internal standard spiking mixture added in all field and QC analyses is the same from run to run, and that the volume (~500 mL) of field and QC sample introduced into the trap is the same for each analysis.]

10.8.5 Technical Acceptance Criteria.

[Note: If the most recent valid calibration is an initial calibration, internal standard area responses and RTs in the sample are evaluated against the corresponding internal standard area responses and RTs in the mid level standard (10 ppbv) of the initial calibration.]

10.8.5.1 The field sample must be analyzed on a GC/MS system meeting the BFB tuning, initial calibration, and continuing calibration technical acceptance criteria at the frequency described in Sections 10.4, 10.5 and 10.6.

10.8.5.2 The field samples must be analyzed along with a laboratory method blank that met the blank technical acceptance criteria.

10.8.5.3 All of the target analyte peaks should be within the initial calibration range.

10.8.5.4 The retention time for each internal standard must be within ±0.33 minutes of the retention time of the internal standard in the most recent valid calibration.

10.8.6 Corrective Action. If the on-column concentration of any compound in any sample exceeds the initial calibration range, an aliquot of the original sample must be diluted and reanalyzed. Guidance in performing dilutions and exceptions to this requirement are given below.

- Use the results of the original analysis to determine the approximate dilution factor required to get the largest analyte peak within the initial calibration range.
- The dilution factor chosen should keep the response of the largest analyte peak for a target compound in the upper half of the initial calibration range of the instrument.

[Note: Analysis involving dilution should be reported with a dilution factor and nature of the dilution gas.]

10.8.6.1 Internal standard responses and retention times must be evaluated during or immediately after data acquisition. If the retention time for any internal standard changes by more than 20 sec from the latest daily (24-hour) calibration standard (or mean retention time over the initial calibration range), the GC/MS system must be inspected for malfunctions, and corrections made as required.

10.8.6.2 If the area response for any internal standard changes by more than ±40 percent between the sample and the most recent valid calibration, the GC/MS system must be inspected for malfunction and

corrections made as appropriate. When corrections are made, reanalysis of samples analyzed while the system was malfunctioning is necessary.

10.8.6.3 If, after reanalysis, the area responses or the RTs for all internal standards are inside the control limits, then the problem with the first analysis is considered to have been within the control of the Laboratory. Therefore, submit only data from the analysis with SICPs within the limits. This is considered the initial analysis and should be reported as such on all data deliverables.

11. Requirements for Demonstrating Method Acceptability for VOC Analysis from Canisters

11.1 Introduction

11.1.1 There are three performance criteria which must be met for a system to qualify under Compendium Method TO-15. These criteria are: the method detection limit of ≤0.5 ppbv, replicate precision within 25 percent, and audit accuracy within 30 percent for concentrations normally expected in contaminated ambient air (0.5 to 25 ppbv).

11.1.2 Either SIM or SCAN modes of operation can be used to achieve these criteria, and the choice of mode will depend on the number of target compounds, the decision of whether or not to determine tentatively identified compounds along with other VOCs on the target list, as well as on the analytical system characteristics.

11.1.3 Specific criteria for each Title III compound on the target compound list must be met by the analytical system. These criteria were established by examining summary data from EPA's Toxics Air Monitoring System Network and the Urban Air Toxics Monitoring Program network. Details for the determination of each of the criteria follow.

11.2 Method Detection Limit

11.2.1 The procedure chosen to define the method detection limit is that given in the *Code of Federal Regulations* (40 CFR 136 Appendix B).

11.2.2 The method detection limit is defined for each system by making seven replicate measurements of the compound of interest at a concentration near (within a factor of five) the expected detection limit, computing the standard deviation for the seven replicate concentrations, and multiplying this value by 3.14 (i.e., the Student's t value for 99 percent confidence for seven values). Employing this approach, the detection limits given in Table 4 were obtained for some of the VOCs of interest.

11.3 Replicate Precision

11.3.1 The measure of replicate precision used for this program is the absolute value of the difference between replicate measurements of the sample divided by the average value and expressed as a percentage as follows:

$$\text{percent difference} = \frac{|x_1 - x_2|}{\bar{x}} \times 100$$

where: x_1 = First measurement value.

x_2 = Second measurement value.

$\bar{x}$ = Average of the two values.

11.3.2 There are several factors which may affect the precision of the measurement. The nature of the compound of interest itself such as molecular weight, water solubility, polarizability, etc., each have some effect on the precision, for a given sampling and analytical system. For example, styrene, which is classified as a polar VOC, generally shows slightly poorer precision than the bulk of nonpolar VOCs. A primary influence on precision is the concentration level of the compound of interest in the sample, i.e., the precision degrades as the concentration approaches the detection limit. A conservative measure was obtained from replicate analysis of "real world" canister samples from the TAMS and UATMP networks. These data are summarized in Table 5 and suggest that a replicate precision value of 25 percent can be achieved for each of the target compounds.

11.4 Audit Accuracy

11.4.1 A measure of analytical accuracy is the degree of agreement with audit standards. Audit accuracy is defined as the difference between the nominal concentration of the audit compound and the measured value divided by the audit value and expressed as a percentage, as illustrated in the following equation:

$$\text{Audit Accuracy, \%} = \frac{\text{Spiked Value} - \text{Observed Value}}{\text{Spiked Value}} \times 100$$

11.4.2 Audit accuracy results for TAMS and UATMP analyses are summarized in Table 6 and were used to form the basis for a selection of 30 percent as the performance criterion for audit accuracy.

12. References

1. *Compendium of Methods for the Determination of Toxic Organic Compounds in Ambient Air: Method TO-14A, Second Edition*, U. S. Environmental Protection Agency, Research Triangle Park, NC, EPA 600/625/R-96/010b, January 1997.

2. Winberry, W. T., Jr., et al., *Statement-of-Work (SOW) for the Analysis of Air Toxics From Superfund Sites*, U. S. Environmental Protection Agency, Office of Solid Waste, Contract Laboratory Program, Washington, D.C., Draft Report, June 1990.

3. Coutant, R.W., *Theoretical Evaluation of Stability of Volatile Organic Chemicals and Polar Volatile Organic Chemicals in Canisters*, U. S. Environmental Protection Agency, EPA Contract No. 68-DO-0007, Work Assignment No. 45, Subtask 2, Battelle, Columbus, OH, June 1993.

4. Kelly, T.J., Mukund, R., Gordon, S.M., and Hays, M.J., *Ambient Measurement Methods and Properties of the 189 Title III Hazardous Air Pollutants*, U. S. Environmental Protection Agency, EPA Contract No. 68-DO-0007, Work Assignment 44, Battelle, Columbus, OH, March 1994.

5. Kelly T. J. and Holdren, M.W., "Applicability of Canisters for Sample Storage in the Determination of Hazardous Air Pollutants," *Atmos. Environ.*, Vol. 29, 2595-2608, May 1995.

6. Kelly, T.J., Callahan, P.J., Pleil, J.K., and Evans, G.E., "Method Development and Field Measurements for Polar Volatile Organic Compounds in Ambient Air," *Environ. Sci. Technol.*, Vol. 27, 1146-1153, 1993.

7. McClenny, W.A., Oliver, K.D. and Daughtrey, E.H.., Jr. "Dry Purging of Solid Adsorbent Traps to Remove Water Vapor Before Thermal Desorption of Trace Organic Gases," *J. Air and Waste Manag. Assoc.*, Vol. 45, 792-800, June 1995.

8. Whitaker, D.A., Fortmann, R.C. and Lindstrom, A.B. "Development and Testing of a Whole Air Sampler for Measurement of Personal Exposures to Volatile Organic Compounds," *Journal of Exposure Analysis and Environmental Epidemiology*, Vol. 5, No. 1, 89-100, January 1995.

9. Pleil, J.D. and Lindstrom, A.B., "Collection of a Single Alveolar Exhaled Breath for Volatile Organic Compound Analysis," *American Journal of Industrial Medicine*, Vol. 28, 109-121, 1995.

10. Pleil, J.D. and McClenny, W.A., "Spatially Resolved Monitoring for Volatile Organic Compounds Using Remote Sector Sampling," *Atmos. Environ.*, Vol. 27A, No. 5, 739-747, August 1993.

11. Holdren, M.W., et al., Unpublished Final Report, EPA Contract 68-DO-0007, Battelle, Columbus, OH. Available from J.D. Pleil, MD-44, U. S. Environmental Protection Agency, Research Triangle Park, NC, 27711, 919-541-4680.

12. Morris, C.M., Burkley, R.E. and Bumgarner, J.E., "Preparation of Multicomponent Volatile Organic Standards Using Dilution Bottles," *Anal. Letts.*, Vol. 16 (A20), 1585-1593, 1983.

13. Pollack, A.J., Holdren, M.W., "Multi-Adsorbent Preconcentration and Gas Chromatographic Analysis of Air Toxics With an Automated Collection/Analytical System," in the *Proceedings of the 1990 EPA/A&WMA International Symposium of Measurement of Toxic and Related Air Pollutants*, U. S. Environmental Protection Agency, Research Triangle Park, NC, EPA/600/9-90-026, May 1990.

14. Stephenson, J.H.M., Allen, F., Slagle, T., "Analysis of Volatile Organics in Air via Water Methods" in *Proceedings of the 1990 EPA/A&WMA International Symposium on Measurement of Toxic and Related Air Pollutants*, U. S. Environmental Protection Agency, Research Triangle Park, NC, EPA 600/9-90-026, May 1990.

15. Oliver, K. D., Adams, J. R., Davehtrey, E. H., Jr., McClenny, W. A., Young, M. J., and Parade, M. A., "Techniques for Monitoring Toxices VOCs in Air: Sorbent Preconcentration Closed-Cycle Cooler Cryofocusing, and GC/MS Analysis," *Environ. Sci. Technol.*, Vol. 30, 1938-1945, 1996.

APPENDIX A.

LISTING OF SOME COMMERCIAL WATER MANAGEMENT SYSTEMS USED WITH AUTOGC SYSTEMS

Tekmar Dohrman Company
7143 East Kemper Road
Post Office Box 429576
Cincinnati, Ohio 45242-9576
(513) 247-7000
(513) 247-7050 (Fax)
(800) 543-4461
[Moisture control module]

Entech Laboratory Automation
950 Enchanted Way No. 101
Simi Valley, California 93065
(805) 527-5939
(805) 527-5687 (Fax)
[Microscale Purge and Trap]

Dynatherm Analytical Instruments
Post Office Box 159
Kelton, Pennsylvania 19346
(215) 869-8702
(215) 869-3885 (Fax)
[Thermal Desorption System]

XonTech Inc.
6862 Hayenhurst Avenue
Van Nuys, CA 91406
(818) 787-7380
(818) 787-4275 (Fax)
[Multi-adsorbent trap/dry purge]

Graseby
500 Technology Ct.
Smyrna, Georgia 30082
(770) 319-9999
(770) 319-0336 (Fax)
(800) 241-6898
[Controlled Desorption Trap]

Varian Chromatography System
2700 Mitchell Drive
Walnut Creek, California 94898
(510) 945-2196
(510) 945-2335 (FAX)
[Variable Temperature Adsorption Trap]

APPENDIX B.

COMMENT ON CANISTER CLEANING PROCEDURES

The canister cleaning procedures given in Section 8.4 require that canister pressure be reduced to <0.05mm Hg before the cleaning process is complete. Depending on the vacuum system design (diameter of connecting tubing, valve restrictions, etc.) and the placement of the vacuum gauge, the achievement of this value may take several hours. In any case, the pressure gauge should be placed near the canisters to determine pressure. The objective of requiring a low pressure evacuation during canister cleaning is to reduce contaminants. If canisters can be routinely certified (<0.2 ppbv for target compounds) while using a higher vacuum, then this criteria can be relaxed. However, the ultimate vacuum achieved during cleaning should always be <0.2mm Hg.

Canister cleaning as described in Section 8.4 and illustrated in Figure 10 requires components with special features. The vacuum gauge shown in Figure 10 must be capable of measuring 0.05mm Hg with less than a 20% error. The vacuum pump used for evacuating the canister must be noncontaminating while being capable of achieving the 0.05 mm Hg vacuum as monitored near the canisters. Thermoelectric vacuum gauges and turbomolecular drag pumps are typically being used for these two components.

An alternate to achieving the canister certification requirement of <0.2 ppbv for all target compounds is the criteria used in Compendium Method TO-12 that the total carbon count be <10ppbC. This check is less expensive and typically more exacting than the current certification requirement and can be used if proven to be equivalent to the original requirement. This equivalency must be established by comparing the total nonmethane organic carbon (TNMOC) expressed in ppbC to the requirement that individual target compounds be <0.2 ppbv for a series of analytical runs.

APPENDIX C.

LISTING OF COMMERCIAL MANUFACTURERS AND RE-SUPPLIERS OF SPECIALLY-PREPARED CANISTERS

BRC/Rasmussen
17010 NW Skyline Blvd.
Portland, Oregon 97321
(503) 621-1435

Meriter
1790 Potrero Drive
San Jose, CA 95124
(408) 265-6482

Restek Corporation
110 Benner Circle
Bellefonte, PA 16823-8812
(814) 353-1300
(800) 356-1688

Scientific Instrumentation Specialists
P.O. Box 8941
815 Courtney Street
Moscow, ID 83843
(208) 882-3860

Graseby
500 Technology Ct.
Smyrna, Georgia 30082
(404) 319-9999
(800) 241-6898

XonTech Inc.
6862 Hayenburst Avenue
Van Nuys, CA 91406
(818) 787-7380

APPENDIX D.

LISTING OF COMMERCIAL SUPPLIERS OF PERMEATION TUBES AND SYSTEMS

Kin-Tek
504 Laurel St.
Lamarque, Texas 77568
(409) 938-3627
(800) 326-3627

Vici Metronics, Inc.
2991 Corvin Drive
Santa Clara, CA 95051
(408) 737-0550

Analytical Instrument Development, Inc.
Rt. 41 and Newark Rd.
Avondale, PA 19311
(215) 268-3181

Ecology Board, Inc.
9257 Independence Ave.
Chatsworth, CA 91311
(213) 882-6795

Tracor, Inc.
6500 Tracor Land
Austin, TX
(512) 926-2800

Metronics Associates, Inc.
3201 Porter Drive
Standford Industrial Park
Palo Alto, CA 94304
(415) 493-5632

TABLE 1. VOLATILE ORGANIC COMPOUNDS ON THE TITLE III CLEAN AIR AMENDMENT LIST--MEMBERSHIP IN COMPENDIUM METHOD TO-14A LIST AND THE SOW-CLP LIST OF VOCs

Compound	CAS No.	BP (°C)	v.p. (mmHg)[1]	MW[1]	TO-14A	CLP-SOW
Methyl chloride (chloromethane); CH3Cl	74-87-3	-23.7	3.8 x 10	50.5	X	X
Carbonyl sulfide; COS	463-58-1	-50.0	3.7 x 10	60.1		
Vinyl chloride (chloroethene); C2H3Cl	75-01-4	-14.0	3.2 x 10	62.5	X	X
Diazomethane; CH2N2	334-88-3	-23.0	2.8 x 10	42.1		
Formaldehyde; CH2O	50-00-0	-19.5	2.7 x 10	30		
1,3-Butadiene; C4H6	106-99-0	-4.5	2.0 x 10	54		X
Methyl bromide (bromomethane); CH3Br	74-83-9	3.6	1.8 x 10	94.9	X	X
Phosgene; CCl2O	75-44-5	8.2	1.2 x 10	99		
Vinyl bromide (bromoethene); C2H3Br	593-60-2	15.8	1.1 x 10	107		
Ethylene oxide; C2H4O	75-21-8	10.7	1.1 x 10	44		
Ethyl chloride (chloroethane); C2H5Cl	75-00-3	12.5	1.0 x 10	64.5	X	X
Acetaldehyde (ethanal); C2H4O	75-07-0	21.0	952	44		
Vinylidene chloride (1,1-dichloroethylene); C2H2Cl2	75-35-4	31.7	500	97	X	X
Propylene oxide; C3H6O	75-56-9	34.2	445	58		
Methyl iodide (iodomethane); CH3I	74-88-4	42.4	400	141.9		
Methylene chloride; CH2Cl2	75-09-2	40.0	349	84.9	X	X
Methyl isocyanate; C2H3NO	624-83-9	59.6	348	57.1		
Allyl chloride (3-chloropropene); C3H5Cl	107-05-1	44.5	340	76.5	X	X
Carbon disulfide; CS2	75-15-0	46.5	260	76		
Methyl tert-butyl ether; C5H12O	1634-04-4	55.2	249	86		
Propionaldehyde; C2H5CHO	123-38-6	49.0	235	58.1		
Ethylidene dichloride (1,1-dichloroethane); C2H4Cl2	75-34-3	57.0	230	99	X	

TABLE 1. (continued)

Compound	CAS No.	BP (°C)	v.p. (mmHg)[1]	MW[1]	TO-14A	CLP-SOW
Chloroprene (2-chloro-1,3-butadiene); C4H5Cl	126-99-8	59.4	226	88.5		
Chloromethyl methyl ether; C2H5ClO	107-30-2	59.0	224	80.5		
Acrolein (2-propenal); C3H4O	107-02-8	52.5	220	56		X
1,2-Epoxybutane (1,2-butylene oxide); C4H8O	106-88-7	63.0	163	72		
Chloroform; CHCl3	67-66-3	61.2	160	119	X	X
Ethyleneimine (aziridine); C2H5N	151-56-4	56	160.0	43		
1,1-Dimethylhydrazine; C2H8N2	57-14-7	63	157.0	60.0		
Hexane; C6H14	110-54-3	69.0	120	86.2	X	
1,2-Propyleneimine (2-methylaziridine); C3H7N	75-55-8	66.0	112	57.1		
Acrylonitrile (2-propenenitrile); C3H3N	107-13-1	77.3	100	53	X	
Methyl chloroform (1,1,1-trichloroethane); C2H3Cl3	71-55-6	74.1	100	133.4	X	X
Methanol; CH4O	67-56-1	65.0	92.0	32		X
Carbon tetrachloride; CCl4	56-23-5	76.7	90.0	153.8	X	X
Vinyl acetate; C4H6O2	108-05-4	72.2	83.0	86		X
Methyl ethyl ketone (2-butanone); C4H8O	78-93-3	79.6	77.5	72		X
Benzene; C6H6	71-43-2	80.1	76.0	78	X	X
Acetonitrile (cyanomethane); C2H3N	75-05-8	82	74.0	41.0		X
Ethylene dichloride (1,2-dichloroethane); C2H4Cl2	107-06-2	83.5	61.5	99	X	X
Triethylamine; C6H15N	121-44-8	89.5	54.0	101.2		
Methylhydrazine; CH6N2	60-34-4	87.8	49.6	46.1		
Propylene dichloride (1,2-dichloropropane); C3H6Cl2	78-87-5	97.0	42.0	113	X	X
2,2,4-Trimethyl pentane C8H18	540-84-1	99.2	40.6	114		
1,4-Dioxane (1,4-Diethylene oxide); C4H8O2	123-91-1	101	37.0	88		
Bis(chloromethyl) ether; C2H4Cl2O	542-88-1	104	30.0	115		
Ethyl acrylate; C5H8O2	140-88-5	100	29.3	100		
Methyl methacrylate; C5H8O2	80-62-6	101	28.0	100.1		

TABLE 1. (continued)

Compound	CAS No.	BP (°C)	V.P. (mmHg)	MW	TO-14A	CLP-SOW
Methyl methacrylate; C5H8O2	80-62-101	101	28.0	100.1		
1,3-Dichloropropene; C3H4Cl2 (cis)	542-75-6	112	27.8	111	X	X
Toluene; C7H8	108-88-3	111	22.0	92	X	X
Trichloroethylene; C2HCl3	79-01-6	87.0	20.0	131.4	X	X
1,1,2-Trichloroethane; C2H3Cl3	79-00-5	114	19.0	133.4	X	X
Tetrachloroethylene; C2Cl4	127-18-4	121	14.0	165.8	X	X
Epichlorohydrin (1-chloro-2,3-epoxy propane); C3H5ClO	106-89-8	117	12.0	92.5		
Ethylene dibromide (1,2-dibromoethane); C2H4Br2	106-93-4	132	11.0	187.9	X	X
N-Nitroso-N-methylurea; C2H5N3O2	684-93-5	124	10.0	103		
2-Nitropropane; C3H7NO2	79-46-9	120	10.0	89		
Chlorobenzene; C6H5Cl	108-90-7	132	8.8	112.6	X	X
Ethylbenzene; C8H10	100-41-4	136	7.0	106	X	X
Xylenes (isomer & mixtures); C8H10	1330-20-7	142	6.7	106.2	X	X
Styrene; C8H8	100-42-5	145	6.6	104	X	X
p-Xylene; C8H10	106-42-3	138	6.5	106.2	X	X
m-Xylene; C8H10	108-38-3	139	6.0	106.2	X	X
Methyl isobutyl ketone (hexone); C6H12O	108-10-1	117	6.0	100.2		
Bromoform (tribromomethane); CHBr3	75-25-2	149	5.6	252.8		
1,1,2,2-Tetrachloroethane; C2H2Cl4	79-34-5	146	5.0	167.9	X	X
o-Xylene; C8H10	95-47-6	144	5.0	106.2	X	X
Dimethylcarbamyl chloride; C3H6ClNO	79-44-7	166	4.9	107.6		
N-Nitrosodimethylamine; C2H6N2O	62-75-9	152	3.7	74		
Beta-Propiolactone; C3H4O2	57-57-8	Decomposes at 162	3.4	72		
Cumene (isopropylbenzene); C9H12	98-82-8	153	3.2	120		

TABLE 1. (continued)

Compound	CAS No.	BP (°C)	V.P. (mmHg)	MW	TO-14A	CLP-SOW
Cumene (isopropylbenzene); C9H12	98-82-8	153	3.2	120		
Acrylic acid; C3H4O2	79-10-7	141	3.2	72		
N,N-Dimethylformamide; C3H7NO	68-12-2	153	2.7	73		
1,3-Propane sultone; C3H6O3S	1120-71-4	180/30mm	2.0	122.1		
Acetophenone; C8H8O	98-86-2	202	1.0	120		
Dimethyl sulfate; C2H6O4S	77-78-1	188	1.0	126.1		
Benzyl chloride (a-chlorotoluene); C7H7Cl	100-44-7	179	1.0	126.6	X	X
1,2-Dibromo-3-chloropropane; C3H5Br2Cl	96-12-8	196	0.80	236.4		
Bis(2-Chloroethyl)ether; C4H8Cl2O	111-44-4	178	0.71	143		
Chloroacetic acid; C2H3ClO2	79-11-8	189	0.69	94.5		
Aniline (aminobenzene); C6H7N	62-53-3	184	0.67	93		
1,4-Dichlorobenzene (p-); C6H4Cl2	106-46-7	173	0.60	147	X	X
Ethyl carbamate (urethane); C3H7NO2	51-79-6	183	0.54	89		
Acrylamide; C3H5NO	79-06-1	125/25 mm	0.53	71		
N,N-Dimethylaniline; C8H11N	121-69-7	192	0.50	121		
Hexachloroethane; C2Cl6	67-72-1	Sublimes at 186	0.40	236.7		
Hexachlorobutadiene; C4Cl6	87-68-3	215	0.40	260.8	X	X
Isophorone; C9H14O	78-59-1	215	0.38	138.2		
N-Nitrosomorpholine; C4H8N2O2	59-89-2	225	0.32	116.1		
Styrene oxide; C8H8O	96-09-3	194	0.30	120.2		
Diethyl sulfate; C4H10O4S	64-67-5	208	0.29	154		
Cresylic acid (cresol isomer mixture);C7H8O	1319-77-3	202	0.26	108		
o-Cresol; C7H8O	95-48-7	191	0.24	108		
Catechol (o-hydroxyphenol); C6H6O2	120-80-9	240	0.22	110		
Phenol; C6H6O	108-95-2	182	0.20	94		

TABLE 1. (continued)

Compound	CAS No.	BP (°C)	v.p. (mmHg)[1]	MW[1]	TO-14A	CLP-SOW
Catechol (o-hydroxyphenol); C6H6O2	120-80-9	240	0.22	110		
Phenol; C6H6O	108-95-2	182	0.20	94		
1,2,4-Trichlorobenzene; C6H3Cl3	120-82-1	213	0.18	181.5	X	X
nitrobenzene C6H5NO2	98-95-3	211	0.15	123		

[1]Vapor pressure (v.p.), boiling point (BP) and molecularweight (MW) data from:
(a)D. L. Jones and J. bursey, "Simultaneous Control of PM-10 and Hazardous Air Pollutants II: Rationale for Selection of Hazardous Air Pollutants as Potential Particulate Matter," Report EPA-452/R-93/013, U. S. Environmental Protection Agency, Research Triangle Park, NC. October 1992;
(b)R. C. Weber, P. A. Parker, and M. Bowser. Vapor Pressure Distribution of Selected Organic Chemicals, Report EPA-600/2-81-021, U. S. Environmental Protection Agency, Cincinnati, OH, February 1981; and
(c)R. C. Weast, ed., "CRC Handbook of Chemistry and Physics," 59th edition, CRC Press, Boca Raton, 1979.

TABLE 2. CHARACTERISTIC MASSES (M/Z) USED FOR QUANTIFYING THE TITLE III CLEAN AIR ACT AMENDMENT COMPOUNDS

Compound	CAS No.	Primary Ion	Secondary Ion
Methyl chloride (chloromethane); CH3Cl	74-87-3	50	52
Carbonyl sulfide; COS	463-58-1	60	62
Vinyl chloride (chloroethene); C2H3Cl	75-01-4	62	64
Diazomethane; CH2N2	334-88-3	42	41
Formaldehyde; CH2O	50-00-0	29	30
1,3-Butadiene; C4H6	106-99-0	39	54
Methyl bromide (bromomethane); CH3Br	74-83-9	94	96
Phosgene; CCl2O	75-44-5	63	65
Vinyl bromide (bromoethene); C2H3Br	593-60-2	106	108
Ethylene oxide; C2H4O	75-21-8	29	44
Ethyl chloride (chloroethane); C2H5Cl	75-00-3	64	66
Acetaldehyde (ethanal); C2H4O	75-07-0	44	29, 43
Vinylidene chloride (1,1-dichloroethylene); C2H2Cl2	75-35-4	61	96
Propylene oxide; C3H6O	75-56-9	58	57
Methyl iodide (iodomethane); CH3I	74-88-4	142	127
Methylene chloride; CH2Cl2	75-09-2	49	84, 86
Methyl isocyanate; C2H3NO	624-83-9	57	56
Allyl chloride (3-chloropropene); C3H5Cl	107-05-1	76	41, 78
Carbon disulfide; CS2	75-15-0	76	44, 78
Methyl tert-butyl ether; C5H12O	1634-04-4	73	41, 53
Propionaldehyde; C3H5CHO	123-38-6	58	29, 57
Ethylene dichloride (1,1-dichloroethane); C2H4Cl2	75-34-3	63	65, 27
Chloroprene (2-chloro-1,3-butadiene); C4H5Cl	126-99-8	88	53, 90
Chloromethyl methyl ether; C2H5ClO	107-30-2	45	29, 49
Acrolein (2-propenal); C3H4O	107-02-8	56	55
1,2-Epoxybutane (1,2-butylene oxide); C4H8O	106-88-7	42	41, 72
Chloroform; CHCl3	67-66-3	83	85, 47
Ethyleneimine (aziridine); C2H5N	151-56-4	42	43
1,1-Dimethylhydrazine; C2H8N2	57-14-7	60	45, 59
Hexane; C6H14	110-54-3	57	41, 43
1,2-Propyleneimine (2-methylaziridine); C3H7N	75-55-8	56	57, 42
Acrylonitrile (2-propenenitrile); C3H3N	107-13-1	53	52
Methyl chloroform (1,1,1 trichloroethane); C2H3Cl3	71-55-6	97	99, 61
Methanol; CH4O	67-56-1	31	29
Carbon tetrachloride; CCl4	56-23-5	117	119
Vinyl acetate; C4H6O2	108-05-4	43	86
Methyl ethyl ketone (2-butanone); C4H8O	78-93-3	43	72

TABLE 2. (continued)

Compound	CAS No.	Primary Ion	Secondary Ion
Benzene; C6H6	71-43-2	78	77,50
Acetonitrile (cyanomethane); C2H3N	75-05-8	41	40
Ethylene dichloride (1,2-dichloromethane); C2H4Cl2	107-06-2	62	64, 27
Triethylamine; C6H15N	121-44-8	86	58, 101
Methylhydrazine; CH6N2	60-34-4	46	31, 45
Propylene dichloride (1,2-dichloropropane); C3H6Cl2	78-87-5	63	41, 62
2,2,4-Trimethyl pentane; C8H18	540-84-1	57	41, 56
1,4-Dioxane (1,4 Diethylene oxide); C4H8O2	123-91-1	88	58
Bis(chloromethyl) ether; C2H4Cl2O	542-88-1	79	49, 81
Ethyl acrylate; C5H8O2	140-88-5	55	73
Methyl methacrylate; C5H8O2	80-62-6	41	69, 100
1,3-Dichloropropene; C3H4Cl2 (cis)	542-75-6	75	39, 77
Toluene; C7H8	108-88-3	91	92
Trichloethylene; C2HCl3	79-01-6	130	132, 95
1,1,2-Trichloroethane; C2H3Cl3	79-00-5	97	83, 61
Tetrachloroethylene; C2Cl4	127-18-4	166	164, 131
Epichlorohydrin (l-chloro-2,3-epoxy propane); C3H5ClO	106-89-8	57	49, 62
Ethylene dibromide (1,2-dibromoethane); C2H4Br2	106-93-4	107	109
N-Nitroso-N-methylurea; C2H5N3O2	684-93-5	60	44, 103
2-Nitropropane; C3H7NO2	79-46-9	43	41
Chlorobenzene; C6H5Cl	108-90-7	112	77, 114
Ethylbenzene; C8H10	100-41-4	91	106
Xylenes (isomer & mixtures); C8H10	1330-20-7	91	106
Styrene; C8H8	100-42-5	104	78, 103
p-Xylene; C8H10	106-42-3	91	106
m-Xylene; C8H10	108-38-3	91	106
Methyl isobutyl ketone (hexone); C6H12O	108-10-1	43	58, 100
Bromoform (tribromomethane); CHBr3	75-25-2	173	171, 175
1,1,2,2-Tetrachloroethane; C2H2Cl4	79-34-5	83	85
o-Xylene; C8H10	95-47-6	91	106
Dimethylcarbamyl chloride; C3H6ClNO	79-44-7	72	107
N-Nitrosodimethylamine; C2H6N2O	62-75-9	74	42
Beta-Propiolactone; C3H4O2	57-57-8	42	43
Cumene (isopropylbenzene); C9H12	98-82-8	105	120
Acrylic acid; C3H4O2	79-10-7	72	45, 55
N,N-Dimethylformamide; C3H7NO	68-12-2	73	42, 44
1,3-Propane sultone; C3H6O3S	1120-71-4	58	65, 122

TABLE 2. (continued)

Compound	CAS No.	Primary Ion	Secondary Ion
Acetophenone; C8H8O	98-86-2	105	77,120
Dimethyl sulfate; C2H6O4S	77-78-1	95	66,96
Benzyl chloride (a-chlorotoluene); C7H7Cl	100-44-7	91	126
1,2-Dibromo-3-chloropropane; C3H5Br2Cl	96-12-8	57	155, 157
Bis(2-Chloroethyl)ether; C4H8Cl2O	111-44-4	93	63, 95
Chloroacetic acid; C2H3ClO2	79-11-8	50	45, 60
Aniline (aminobenzene); C6H7N	62-53-3	93	66
1,4-Dichlorobenzene (p-); C6H4Cl2	106-46-7	146	148, 111
Ethyl carbamate (urethane); C3H7NO2	51-79-6	31	44, 62
Acrylamide; C3H5NO	79-06-1	44	55, 71
N,N-Dimethylaniline; C8H11N	121-69-7	120	77, 121
Hexachloroethane; C2Cl6	67-72-1	201	199, 203
Hexachlorobutadiene; C4Cl6	87-68-3	225	227, 223
Isophorone; C9H14O	78-59-1	82	138
N-Nitrosomorpholine; C4H8N2O2	59-89-2	56	86, 116
Styrene oxide; C8H8O	96-09-3	91	120
Diethyl sulfate; C4H10O4S	64-67-5	45	59, 139
Cresylic acid (cresol isomer mixture); C7H8O	1319-77-3		
o-Cresol; C7H8O	95-48-7	108	107
Catechol (o-hydroxyphenol); C6H6O2	120-80-9	110	64
Phenol; C6H6O	108-95-2	94	66
1,2,4-Trichlorobenzene; C6H3Cl3	120-82-1	180	182, 184
Nitrobenzene; C6H5NO2	98-95-3	77	51, 123

TABLE 3. REQUIRED BFB KEY IONS AND ION ABUNDANCE CRITERIA

Mass	Ion Abundance Criteria[1]
50	8.0 to 40.0 Percent of m/e 95
75	30.0 to 66.0 Percent of m/e 95
95	Base Peak, 100 Percent Relative Abundance
96	5.0 to 9.0 Percent of m/e 95 (See note)
173	Less than 2.0 Percent of m/e 174
174	50.0 to 120.0 Percent of m/e 95
175	4.0 to 9.0 Percent of m/e 174
176	93.0 to 101.0 Percent of m/e 174
177	5.0 to 9.0 Percent of m/e 176

[1]All ion abundances must be normalized to m/z 95, the nominal base peak, even though the ion abundance of m/z 174 may be up to 120 percent that of m/z 95.

TABLE 4. METHOD DETECTION LIMITS (MDL)[1]

TO-14A List	Lab #1, SCAN	Lab #2, SIM
Benzene	0.34	0.29
Benzyl Chloride	--	--
Carbon tetrachloride	0.42	0.15
Chlorobenzene	0.34	0.02
Chloroform	0.25	0.07
1,3-Dichlorobenzene	0.36	0.07
1,2-Dibromoethane	--	0.05
1,4-Dichlorobenzene	0.70	0.12
1,2-Dichlorobenzene	0.44	--
1,1-Dichloroethane	0.27	0.05
1,2-Dichloroethane	0.24	--
1,1-Dichloroethene	--	0.22
cis-1,2-Dichloroethene	--	0.06
Methylene chloride	1.38	0.84
1,2-Dichloropropane	0.21	--
cis-1,3-Dichloropropene	0.36	--
trans-1,3-Dichloropropene	0.22	--
Ethylbenzene	0.27	0.05
Chloroethane	0.19	--
Trichlorofluoromethane	--	--
1,1,2-Trichloro-1,2,2-trifluoroethane		--
1,2-Dichloro-1,1,2,2-tetrafluoroethane	--	--
Dichlorodifluoromethane	--	--
Hexachlorobutadiene	--	--
Bromomethane	0.53	--
Chloromethane	0.40	--
Styrene	1.64	0.06
1,1,2,2-Tetrachloroethane	0.28	0.09
Tetrachloroethene	0.75	0.10
Toluene	0.99	0.20
1,2,4-Trichlorobenzene	--	--
1,1,1-Trichloroethane	0.62	0.21
1,1,2-Trichloroethane	0.50	--
Trichloroethene	0.45	0.07
1,2,4-Trimethylbenzene	--	--
1,3,5-Trimethylbenzene	--	--
Vinyl Chloride	0.33	0.48
m,p-Xylene	0.76	0.08
o-Xylene	0.57	0.28

[1]Method Detection Limits (MDLs) are defined as the product of the standard deviation of seven replicate analyses and the student's "t" test value for 99% confidence. For Lab #2, the MDLs represent an average over four studies. MDLs are for MS/SCAN for Lab #1 and for MS/SIM for Lab #2.

TABLE 5. SUMMARY OF EPA DATA ON REPLICATE PRECISION (RP) FROM EPA NETWORK OPERATIONS[1]

Monitoring Compound Identification	EPA's Urban Air Toxics Monitoring Program (UATMP)			EPA's Toxics Air Monitoring Stations (TAMS)		
	%RP	#	ppbv	%RP	#	ppbv
Dichlorodifluoromethane	--		--	13.9	47	0.9
Methylene chloride	16.3	07	4.3	19.4	47	0.6
1,2-Dichloroethane	36.2	31	1.6	--	--	--
1,1,1-Trichloroethane	14.1	44	1.0	10.6	47	2.0
Benzene	12.3	56	1.6	4.4	47	1.5
Trichloroethene	12.8	08	1.3	--	--	--
Toluene	14.7	76	3.1	3.4	47	3.1
Tetrachloroethene	36.2	12	0.8	--	--	--
Chlorobenzene	20.3	21	0.9	--	--	--
Ethylbenzene	14.6	32	0.7	5.4	47	0.5
m-Xylene	14.7	75	4.0	5.3	47	1.5
Styrene	22.8	59[2]	1.1	8.7	47	0.2[2]
o-Xylene	--		--	6.0	47	0.5
p-Xylene	--					
1,3-Dichlorobenzene	49.1	06	0.6	--	--	--
1,4-Dichlorobenzene	14.7	14	6.5	--	--	--

[1]Denotes the number of replicate or duplicate analysis used to generate the statistic. The replicate precision is defined as the mean ratio of absolute difference to the average value.
[2]Styrene and o-xylene coelute from the GC column used in UATMP. For the TAMS entries, both values were below detection limits for 18 of 47 replicates and were not included in the calculation.

TABLE 6. AUDIT ACCURACY (AA) VALUES[1] FOR SELECTED COMPENDIUM METHOD TO-14A COMPOUNDS

Selected Compounds From TO-14A List	FY-88 TAMS AA(%), N=30	FY-88 UATMP AA(%), N=3
Vinyl chloride	4.6	17.9
Bromomethane	--	6.4
Trichlorofluoromethane	6.4	--
Methylene chloride	8.6	31.4
Chloroform	--	4.2
1,2-Dichloroethane	6.8	11.4
1,1,1-Trichloroethane	18.6	11.3
Benzene	10.3	10.1
Carbon tetrachloride	12.4	9.4
1,2-Dichloropropane	--	6.2
Trichloroethene	8.8	5.2
Toluene	8.3	12.5
Tetrachloroethene	6.2	--
Chlorobenzene	10.5	11.7
Ethylbenzene	12.4	12.4
o-Xylene	16.2	21.2

[1]Audit accuracy is defined as the relative difference between the audit measurement result and its nominal value divided by the nominal value. N denotes the number of audits averaged to obtain the audit accuracy value. Information is not available for other TO-14A compounds because they were not present in the audit materials.

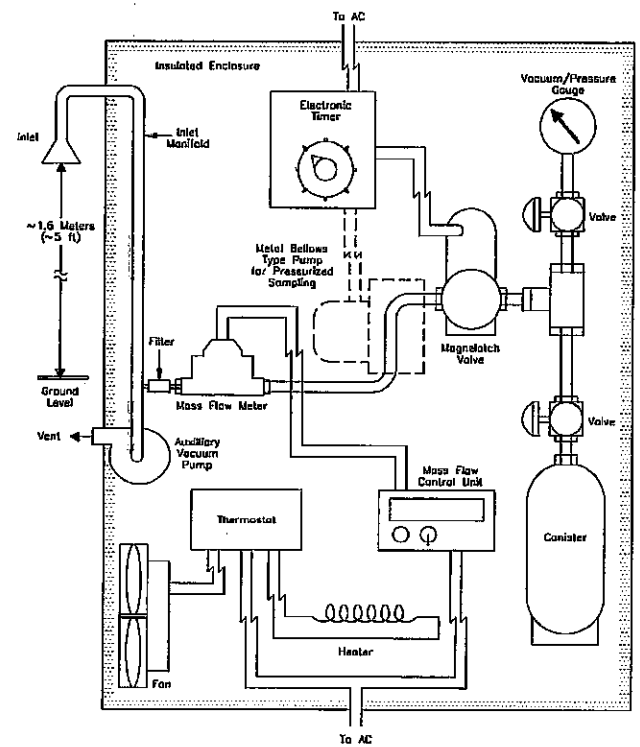

Figure 1. Sampler configuration for subatmospheric pressure or pressurized canister sampling.

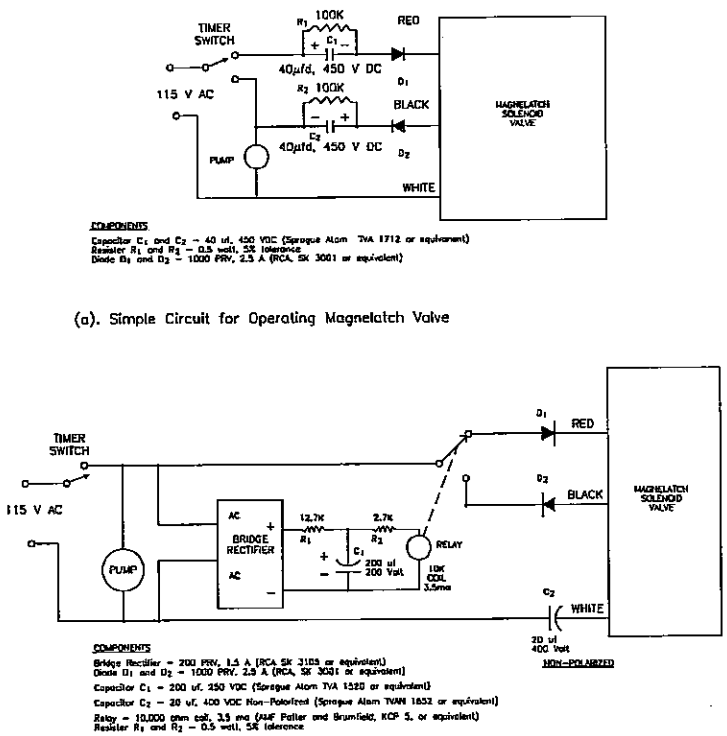

Figure 2. Electrical pulse circuits for driving Skinner magnelatch solenoid valve with mechanical timer.

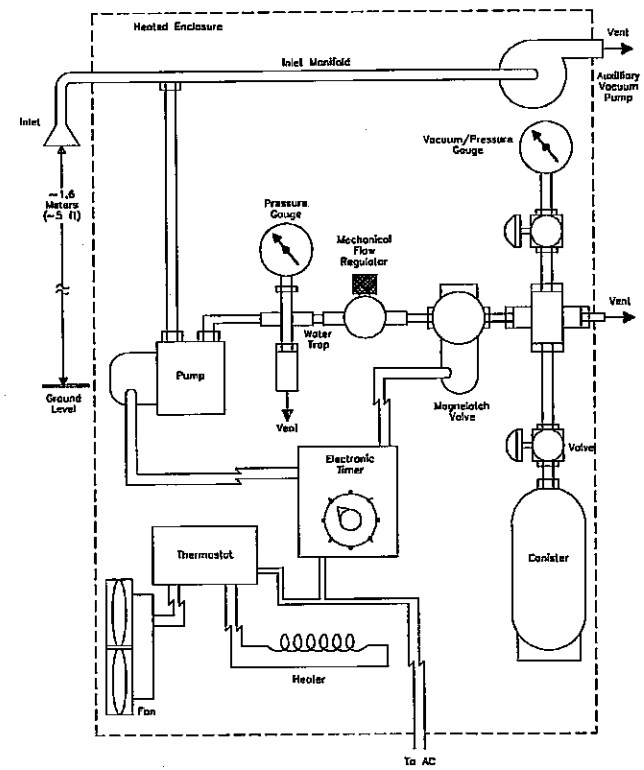

Figure 3. Alternative sampler configuration for pressurized canister sampling.

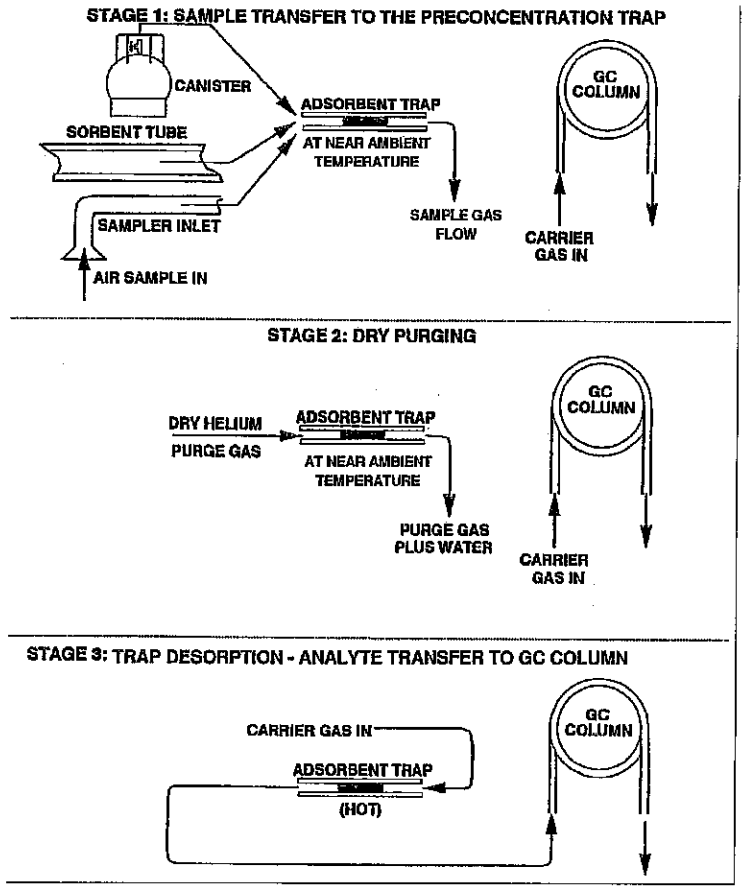

Figure 4. Illustration of three stages of dry purging of adsorbent trap.

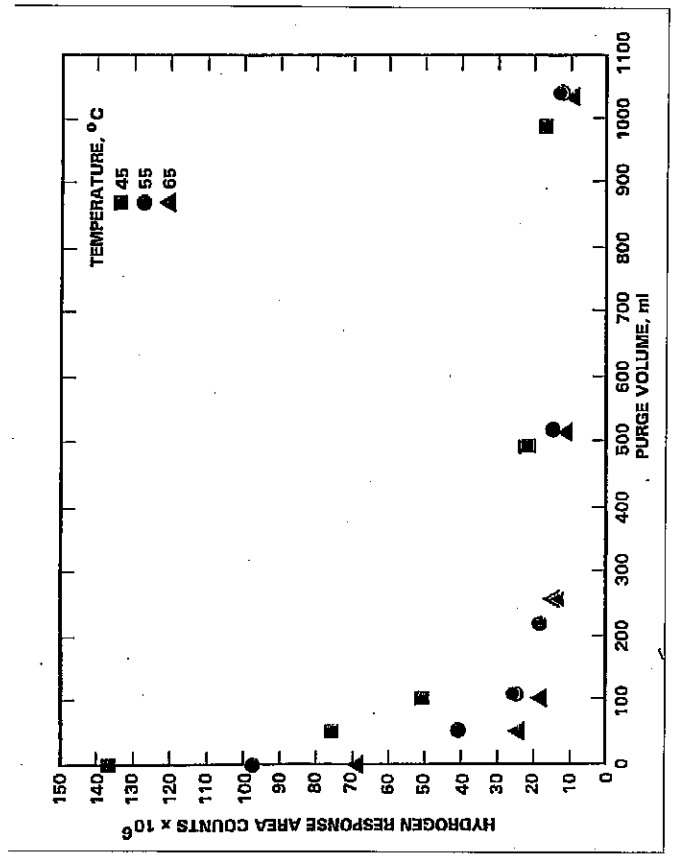

Figure 5. Residual water vapor on VOC concentrator vs. dry He purge volume.

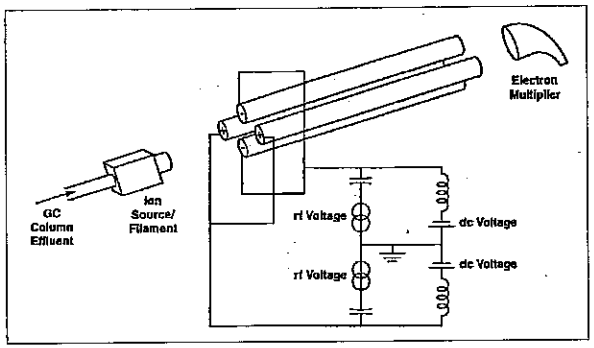

Figure 6. Simplified diagram of a quadrupole mass spectrometer.

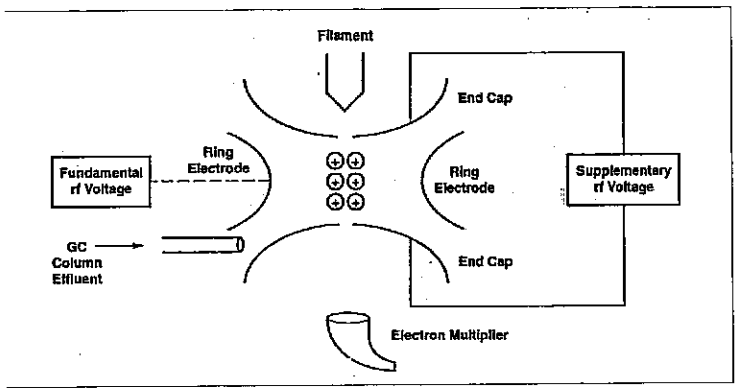

Figure 7. Simplified diagram of an ion trap mass spectrometer.

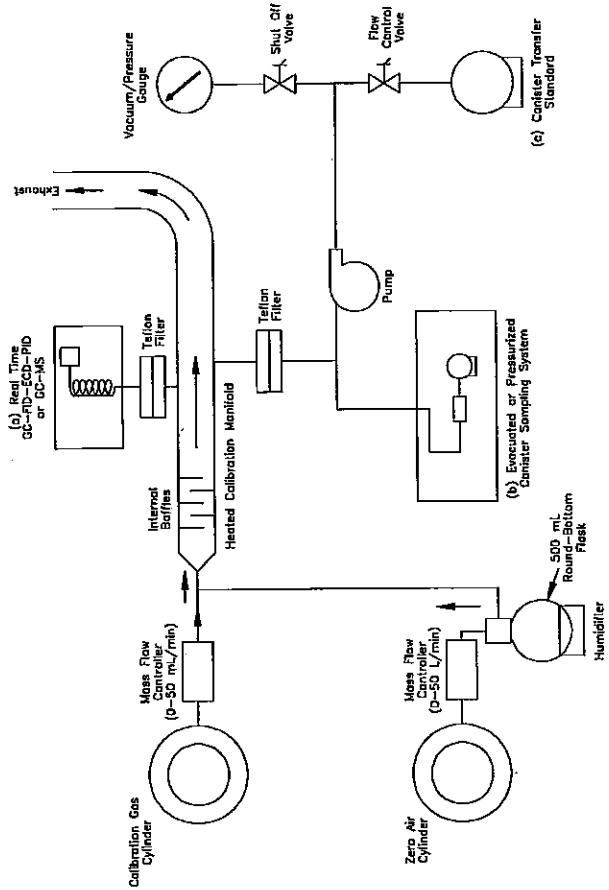

Figure 8. Schematic diagram of calibration system and manifold for (a) analytical system calibration, (b) testing canister sampling system and (c) preparing canister transfer standards.

COMPENDIUM METHOD TO-15
CANISTER SAMPLING FIELD TEST DATA SHEET

A. GENERAL INFORMATION

SITE LOCATION: _____
SITE ADDRESS: _____
_____
SAMPLING DATE: _____

SHIPPING DATE: _____
CANISTER SERIAL NO.: _____
SAMPLER ID: _____
OPERATOR: _____
CANISTER LEAK CHECK DATE: _____

B. SAMPLING INFORMATION

TEMPERATURE

	INTERIOR	AMBIENT	MAXIMUM	MINIMUM
START				
STOP				

PRESSURE

CANISTER PRESSURE	

SAMPLING TIMES

	LOCAL TIME	ELAPSED TIME METER READING
START		
STOP		

FLOW RATES

MANIFOLD FLOW RATE	CANISTER FLOW RATE	FLOW CONTROLLER READOUT

SAMPLING SYSTEM CERTIFICATION DATE: _____
QUARTERLY RECERTIFICATION DATE: _____

C. LABORATORY INFORMATION

DATA RECEIVED: _____
RECEIVED BY: _____
INITIAL PRESSURE: _____
FINAL PRESSURE: _____
DILUTION FACTOR: _____
ANALYSIS
GC-FID-ECD DATE: _____
GC-MSD-SCAN DATE: _____
GC-MSD-SIM DATE: _____
RESULTS*: _____
_____
GC-FID-ECD: _____
GC-MSD-SCAN: _____
GC-MSD-SIM: _____

_____
SIGNATURE/TITLE

Figure 9. Canister sampling field test data sheet (FTDS).

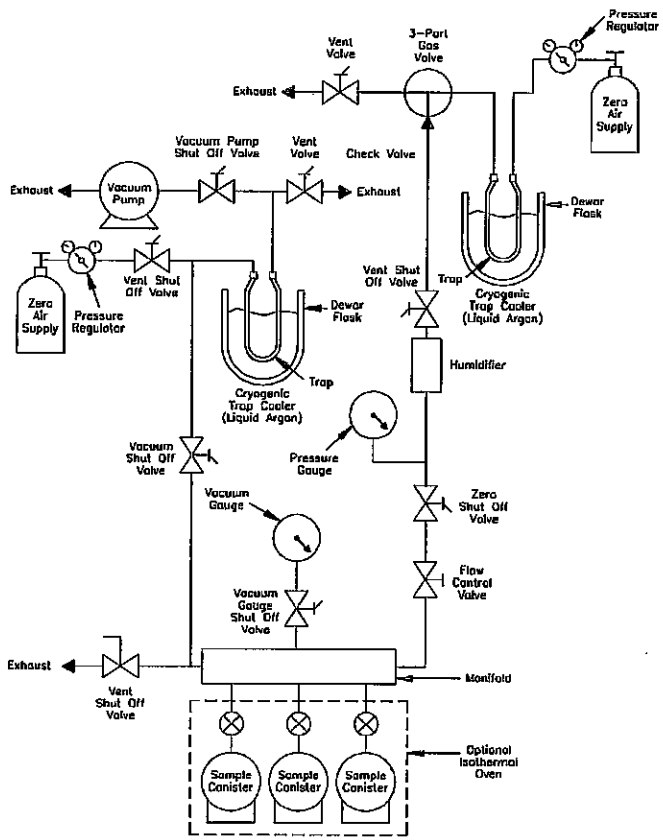

Figure 10. Canister cleaning system.

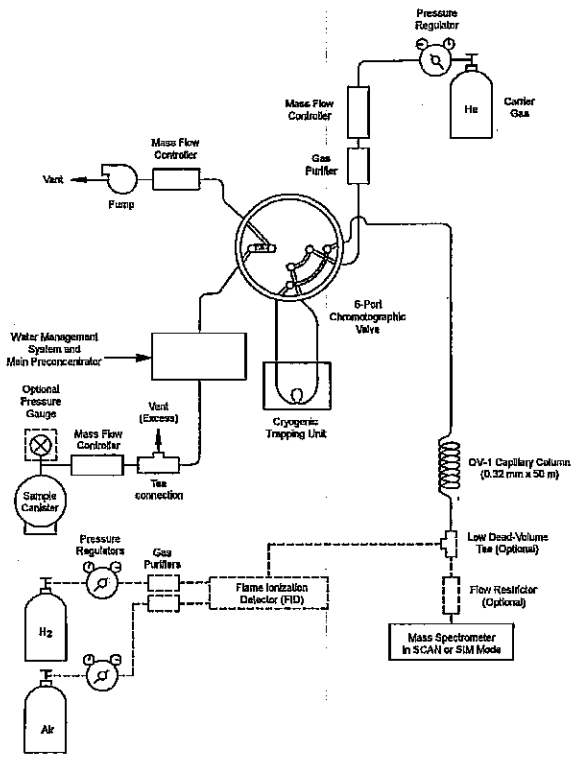

Figure 11. Canister analysis utilizing GC/MS/SCAN/SIM analytical system with optional flame ionization detector with 6-port chromatographic valve in the sample desorption mode.
[Alternative analytical system illustrated in Figure 16.]

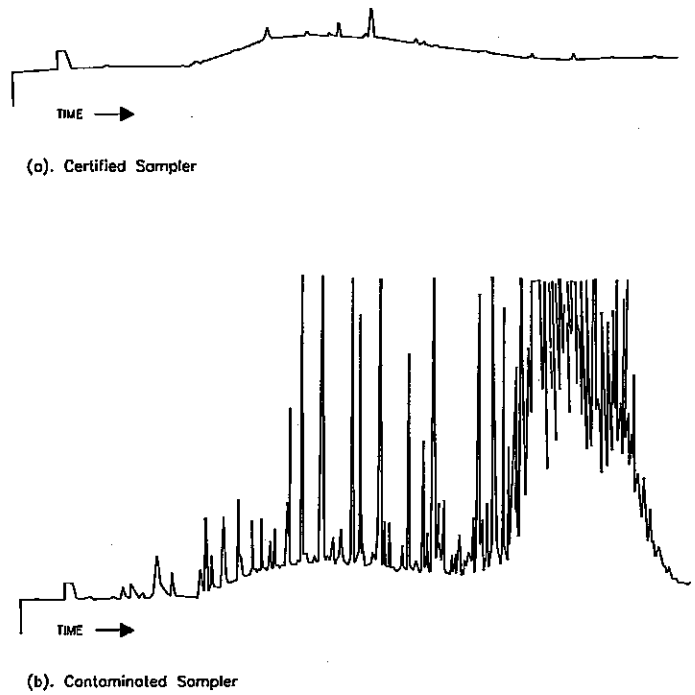

Figure 12. Example of humid zero air test results for a clean sample canister (a) and a contaminated sample canister (b).

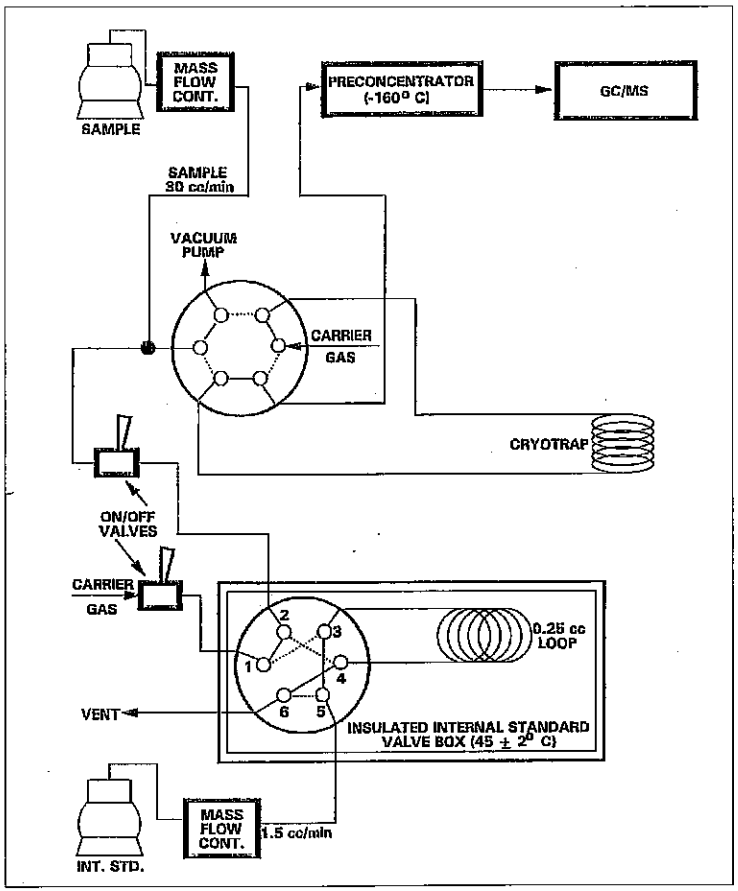

Figure 13. Diagram of design for internal standard addition.

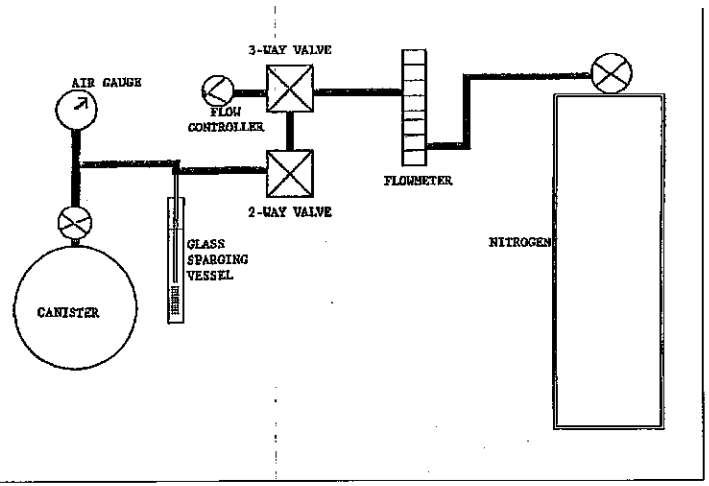

Figure 14. Water method of standard preparation in canisters.

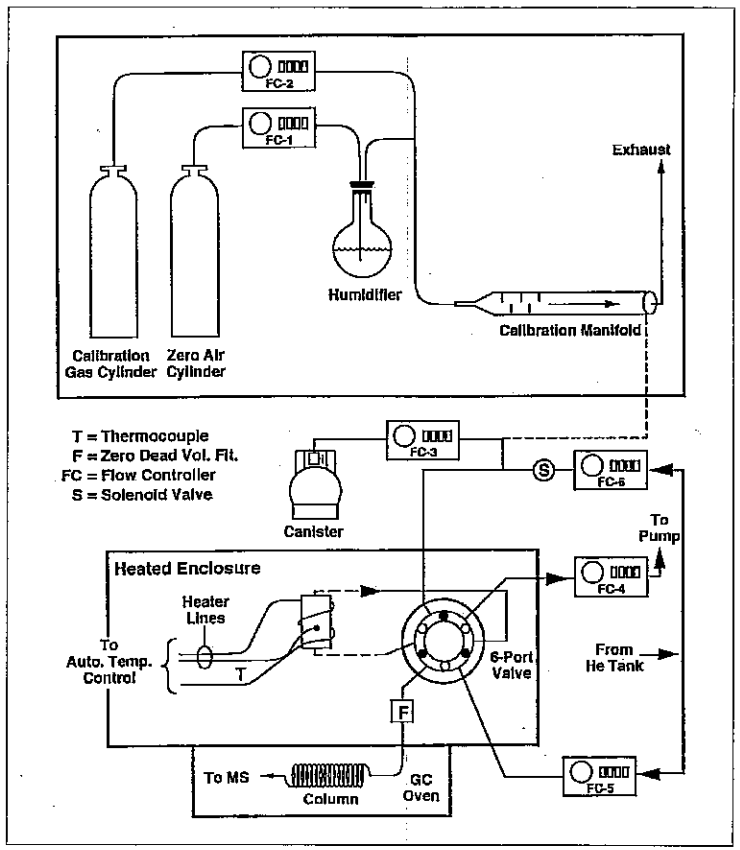

Figure 15. Diagram of the GC/MS analytical system.

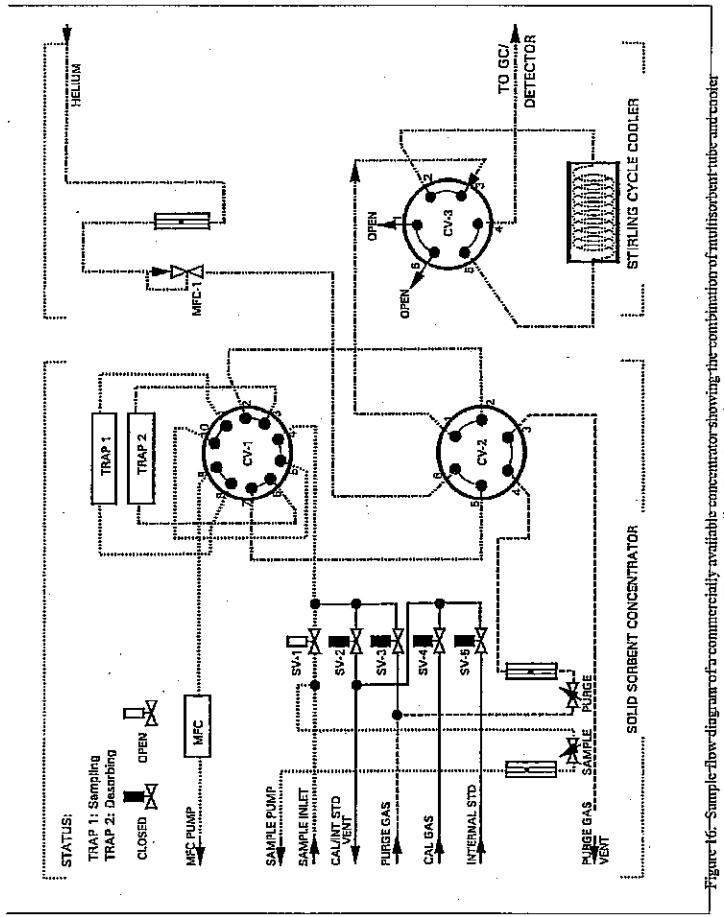

Figure 16. Sample flow diagram of a commercially available concentrator showing the combination of multisorbent tube and cooler (Trap 1 sampling; Trap 2 desorbing).

Attachment C
Analytical Results Summary Table

New Keith Middle School
Foundation Vent Stack Sampling
March 30-31, 2006

	Gym 2	Gym 3	Aud 2	Building B 2	TEL (24-hr avg)	AAL (Annual Avg)	High Conc. Dec. 2001 Soil Gas
Date Sampled:	3/30/06	3/30/06	3/31/06	3/31/06			
2-Butanone (Methyl Ethyl Ketone)*	**1,010**	**269**	**58.3**	**423**	200	10	259.5
Tetrahydrofuran*	**378**	**102**		**112**	160.35	80.18	ND
Acetone*	**1,140**	**474**	16.6		160.54	160.54	95
Ethylbenzene			3.32		300	300	13.9
Toluene			**66.1**	4.35	80	20	462.8
Xylenes			**15.64**		11.8	11.8	84.7
Tetrachloroethene	**84.5**				922.18	0.02	65.8
Cyclohexane		19.7			280.82	280.82	106.7
Methyl-t-butyl ether	68.5	238			NS	NS	10.5
2,2,4-trimethylpentane	1,230	7.3		24.4	NS	NS	--
Methylene Chloride	65.2				NS	NS	ND
n-Hexane		50.2			NS	NS	222
PAHs	NDCM	NDCM	NDCM	NDCM	--	--	--
PCBs	NDCN	NDCN	NDCN	NDCN	--	--	--

Bold typeface = Concentrations exceeding AAL; Yellow shading = Concentrations exceeding TEL
Results reported in ug/M^3
* Common constituents of PVC pipe cements and cleaners
TEL - Threshold Effects Exposure Limit, 24-hour average exposure
AAL - Allowable Ambient Limit, annual average exposure
NDCM = None detected on cartridge at detection limit of 0.5 micrograms
NDCN = None detected on cartridge at detection limit of 2-5 nanograms
NS = No AAL or TEL

PCB & PAH Detection Limits:

	Gym 2	Gym 3	Aud 2	Building B 2
Flow Rate (L/Min)	0.5	0.5	0.5	0.5
Start	1014	1006	1247	1255
Stop	1114	1058	1410	1507
Minutes	60	52	83	132
Liters	30	26	41.5	66
M^3	0.03	0.026	0.0415	0.066
Detection Limit in ng/M^3				
at 5 ng/cartridge	167	192	120	76
at 2 ng/cartridge	67	77	48	30
Detection Limit in ug/M^3				
at 0.5 ug/cartridge	17	19	12	7.6
Stack Volume (L)	47	47	91	131

New Keith Middle School
Foundation Vent Stack Sampling
April 27, 2006

	Gym 2	Gym 2A	Gym 3A	Aud-2A	TEL	AAL	High Conc. Dec. 2001
Date Sampled:	4/27/06	4/27/06	4/27/06	4/27/06	(24-hr avg)	(Annual Avg)	Soil Gas
2-Butanone (Methyl Ethyl Ketone)*	**226**	22	12.2	13	200	10	259.5
Tetrahydrofuran*	70.4			2.86	160.35	80.18	ND
Acetone*	**207**	8.93	12.1	24.6	160.54	160.54	95
Ethyl Alcohol			9.14	25	51.24	51.24	
Toluene	28.7		14.5	21	80	20	462.8
Xylenes		26.6			11.8	11.8	84.7
Iso-Propyl Alcohol			1.32	6.72			
Methyl-t-butyl ether	84.8				NS	NS	10.5
2,2,4-trimethylpentane	63.1				NS	NS	--
Methylene Chloride			23.7	6.27	NS	NS	ND

Bold typeface = Concentrations exceeding AAL; Yellow shading = Concentrations exceeding TEL
Results reported in ug/M^3
* Common constituents of PVC pipe cements and cleaners
TEL - Threshold Effects Exposure Limit, 24-hour average exposure
AAL - Allowable Ambient Limit, annual average exposure
NDCM = None detected on cartridge at detection limit of 0.5 micrograms
NDCN = None detected on cartridge at detection limit of 2-5 nanograms
NS = No AAL or TEL

Attachment D
Laboratory Analytical Data Sheets

ALPHA
WOODS HOLE LABS

ANALYTICAL REPORT

Prepared for:
BETA Group, Inc.
315 Norwood Park South
Norwood, MA 02062

Project:	McCoy Field
ETR:	0604037
Report Date:	April 14, 2006

Certifications and Accreditations
Massachusetts MA030
Connecticut PH-0141
New Hampshire 220602
Rhode Island 64
New Jersey MA015
Maine MA030
New York 11627
Louisiana 03090
Army Corps of Engineers
Department of the Navy
Florida E87814

This report shall not be reproduced except in full, without written approval from the laboratory.

375 Paramount Drive, Suite 2, Raynham, Massachusetts 02767, (508) 822-9300, Fax (508) 822-3288

CASE NARRATIVE
Alpha Woods Hole Labs

ETR: 0604037
Project: McCoy Field

All analyses were performed according to Alpha Woods Hole Labs quality assurance program and documented Standard Operating Procedures (SOPs). The analytical results contained in this report meet all applicable agency and/or NELAC standards, were performed within holding time, and with appropriate quality control measures, except where noted. Blank correction of results is not performed in the laboratory for any parameter. Soil/sediment samples are reported on a dry weight basis unless otherwise noted. Tissue and sediment samples are not certifiable under the NELAC accreditation.

PCB Congeners by GC/MS-SIM

Samples were prepared by soxhlet extraction method TO-4 *Determination of PCB Congeners in Ambient Air using high volume Polyurethane Foam (PUF)*. Samples were extracted at Alpha Woods Hole Labs Westboro MA facility. Extracts are analyzed at Alpha Woods Hole Labs Raynham MA facility by GC/MS-SIM following the procedures outlined in the laboratory SOP *Determination of PCB Homologues and Individual Congeners by GC/MS-SIM (Rev. 2.2, 10/24/02)*. Analytes are introduced into the GC/MS by injecting a known volume of the calibration standards, quality control samples, and sample extracts into the GC equipped with a narrow-bore capillary column. The GC column is temperature programmed to separate the analytes, which are then detected with a mass spectrometer operating in the selective ion mode (SIM). Identification of target analytes in samples is accomplished by comparing retention times, and the mass spectra with those of the calibration standards. Concentrations are determined using mean relative response factors from a multi-level calibration curve. Response factors for target analytes and surrogate compounds are determined relative to the internal standards. Reporting limits are established from a method detection limit study performed on blank cartridges fortified with known concentrations of all target compounds using the above outlined procedures.

1. The laboratory control sample recovered the surrogate Cl3-BZ#19-C13 just below the 50%QC limit at 47%. Please note that all spiked compounds and all sample surrogates were within the QC limits.

The enclosed results of analyses are representative of the samples as received by the laboratory. Alpha Woods Hole Labs makes no representations or certifications as to the method of sample collection, sample identification, or transporting/handling procedures used prior to the receipt of samples by Alpha Woods Hole Labs. To the best of my knowledge, the information contained in this report is accurate and complete.

Approved by: Gerard R. Gribbin Title: Sr. Project Manager Date: 4/14/06

Alpha Woods Hole Lab, 375 Paramount Drive, Suite 2, Raynham, MA 02767, 508-822-9300

Sample ID Cross Reference

Client: **BETA Group, Inc.**
Project: **McCoy Field**

Lab Code: **MA00030**
ETR: **0604037**

Lab Sample ID	Client Sample ID
0604037-01	GYM 2
0604037-02	GYM 3
0604037-03	AUD 2
0604037-04	BUILDING B2

375 Paramount Drive, Suite 2, Raynham, Massachusetts 02767, (508) 822-9300, Fax (508) 822-3288

PCB by GC/MS

ALPHA WOODS HOLE LABS

Client: **BETA Group, Inc.**
Project: **McCoy Field**
Client ID: **GYM 2**
Case: **N/A** SDG: **N/A**
Matrix: **Cartridge**

Lab Code: **MA00030**
ETR: **0604037**
Lab ID: **0604037-01**
Associated Blank: **SC041206B04**
Concentration Units: **ng/Cartridge**

Date Collected	Date Received	Date Extracted	Date Analyzed	Percent Solid	Sample Amount (g)	Final Volume (ml)	Dilution Factor	Analyst
03/31/06	04/07/06	04/05/06	04/12/06	100	1.00	1	1	TLW

Parameter	Result		Parameter	Result	
Cl1-BZ#1	2.0	U	Cl5-BZ#100	2.0	U
Cl1-BZ#3	5.0	U	Cl4-BZ#40	5.0	U
Cl2-BZ#4/#10[1]	5.0	U	Cl4-BZ#63	5.0	U
Cl2-BZ#7	2.0	U	Cl4-BZ#74	2.0	U
Cl2-BZ#6	2.0	U	Cl4-BZ#70	2.0	U
Cl2-BZ#5/#8[1]	5.0	U	Cl4-BZ#76	2.0	U
Cl3-BZ#19	5.0	U	Cl4-BZ#66	5.0	U
Cl2-BZ#12/#13[1]	5.0	U	Cl5-BZ#95	5.0	U
Cl3-BZ#18	5.0	U	Cl5-BZ#91	5.0	U
Cl3-BZ#17	5.0	U	Cl6-BZ#155	2.0	U
Cl2-BZ#15	5.0	U	Cl4-BZ#56/#60[1]	5.0	U
Cl3-BZ#24/#27[1]	5.0	U	Cl5-BZ#92	2.0	U
Cl3-BZ#16/#32[1]	5.0	U	Cl5-BZ#101/#84[1]	5.0	U
Cl3-BZ#29	2.0	U	Cl5-BZ#89	5.0	U
Cl4-BZ#54	2.0	U	Cl5-BZ#99	5.0	U
Cl3-BZ#26	2.0	U	Cl5-BZ#119	5.0	U
Cl3-BZ#25	2.0	U	Cl5-BZ#83	2.0	U
Cl3-BZ#28/#31[1]	10	U	Cl5-BZ#97	5.0	U
Cl4-BZ#50	20	U	Cl4-BZ#81	5.0	U
Cl4-BZ#53	2.0	U	Cl5-BZ#87	5.0	U
Cl4-BZ#51	2.0	U	Cl5-BZ#85	5.0	U
Cl3-BZ#21/#33[1]	5.0	U	Cl6-BZ#136	5.0	U
Cl3-BZ#22	5.0	U	Cl4-BZ#77	5.0	U
Cl4-BZ#45	2.0	U	Cl6-BZ#154	5.0	U
Cl4-BZ#46	2.0	U	Cl5-BZ#110	5.0	U
Cl4-BZ#52	2.0	U	Cl5-BZ#82	5.0	U
Cl4-BZ#43/#49[1]	5.0	U	Cl6-BZ#151	2.0	U
Cl4-BZ#47/#48[1]	5.0	U	Cl6-BZ#135/#144[1]	5.0	U
Cl5-BZ#104	5.0	U	Cl5-BZ#124	5.0	U
Cl4-BZ#44	2.0	U	Cl6-BZ#147	5.0	U
Cl4-BZ#42	2.0	U	Cl5-BZ#107	5.0	U
Cl3-BZ#37	2.0	U	Cl5-BZ#123	5.0	U
Cl4-BZ#64	2.0	U	Cl6-BZ#149	5.0	U
Cl4-BZ#41/#71[1]	5.0	U	Cl5-BZ#118	5.0	U

04/14/06 11:53

PCB by GC/MS

ALPHA WOODS HOLE LABS

Client: **BETA Group, Inc.**
Project: **McCoy Field**
Client ID: **GYM 2**
Case: **N/A** SDG: **N/A**
Matrix: **Cartridge**

Lab Code: **MA00030**
ETR: **0604037**
Lab ID: **0604037-01**
Associated Blank: **SC041206B04**
Concentration Units: **ng/Cartridge**

Date Collected	Date Received	Date Extracted	Date Analyzed	Percent Solid	Sample Amount (g)	Final Volume (ml)	Dilution Factor	Analyst
03/31/06	04/07/06	04/05/06	04/12/06	100	1.00	1	1	TLW

Parameter	Result	
Cl6-BZ#134	5.0	U
Cl5-BZ#114	1.0	U
Cl6-BZ#131	5.0	U
Cl7-BZ#188	1.0	U
Cl6-BZ#146	5.0	U
Cl6-BZ#153	5.0	U
Cl7-BZ#184	2.0	U
Cl6-BZ#132/#168[1]	5.0	U
Cl5-BZ#105	5.0	U
Cl6-BZ#141	5.0	U
Cl6-BZ#137	5.0	U
Cl7-BZ#176	5.0	U
Cl6-BZ#130	5.0	U
Cl6-BZ#138/#163[1]	2.0	U
Cl6-BZ#158	5.0	U
Cl6-BZ#129	5.0	U
Cl7-BZ#178	5.0	U
Cl5-BZ#126	2.0	U
Cl7-BZ#175	2.0	U
Cl7-BZ#182/#187[1]	5.0	U
Cl7-BZ#183	5.0	U
Cl6-BZ#167/#128[1]	5.0	U
Cl7-BZ#185	5.0	U
Cl7-BZ#174	5.0	U

Parameter	Result	
Cl7-BZ#177	5.0	U
Cl8-BZ#202	2.0	U
Cl7-BZ#171	5.0	U
Cl6-BZ#156	1.0	U
Cl7-BZ#173	5.0	U
Cl8-BZ#200	1.0	U
Cl6-BZ#157	1.0	U
Cl7-BZ#172	5.0	U
Cl8-BZ#197	2.0	U
Cl7-BZ#180	5.0	U
Cl7-BZ#193	5.0	U
Cl7-BZ#191	5.0	U
Cl8-BZ#199	5.0	U
Cl6-BZ#169	5.0	U
Cl7-BZ#170/#190[1]	5.0	U
Cl8-BZ#201	5.0	U
Cl8-BZ#196/203[1]	5.0	U
Cl7-BZ#189	1.0	U
Cl9-BZ#208	1.0	U
Cl8-BZ#195	5.0	U
Cl9-BZ#207	5.0	U
Cl8-BZ#194	2.0	U
Cl8-BZ#205	5.0	U
Cl9-BZ#206	2.0	U
Cl10-BZ#209	2.0	U

[1] = These two Congeners are reported as a co-eluting pair.

Surrogate	% Recovery	Acceptance Range (%)
Cl3-BZ#19-C13	69	50-125
Cl8-BZ#202-C13	71	50-125

N/A - Not Applicable
U - The analyte was analyzed for but not detected at the sample specific level reported.

04/14/06 11:54

PCB by GC/MS

ALPHA WOODS HOLE LABS

Client: **BETA Group, Inc.**
Project: **McCoy Field**
Client ID: **GYM 3**
Case: **N/A** SDG: **N/A**
Matrix: **Cartridge**

Lab Code: **MA00030**
ETR: **0604037**
Lab ID: **0604037-02**
Associated Blank: **SC041206B04**
Concentration Units: **ng/Cartridge**

Date Collected	Date Received	Date Extracted	Date Analyzed	Percent Solid	Sample Amount (g)	Final Volume (ml)	Dilution Factor	Analyst
03/31/06	04/07/06	04/05/06	04/12/06	100	1.00	1	1	TLW

Parameter	Result		Parameter	Result	
Cl1-BZ#1	2.0	U	Cl5-BZ#100	2.0	U
Cl1-BZ#3	5.0	U	Cl4-BZ#40	5.0	U
Cl2-BZ#4/#10[1]	5.0	U	Cl4-BZ#63	5.0	U
Cl2-BZ#7	2.0	U	Cl4-BZ#74	2.0	U
Cl2-BZ#6	2.0	U	Cl4-BZ#70	2.0	U
Cl2-BZ#5/#8[1]	5.0	U	Cl4-BZ#76	2.0	U
Cl3-BZ#19	5.0	U	Cl4-BZ#66	5.0	U
Cl2-BZ#12/#13[1]	5.0	U	Cl5-BZ#95	5.0	U
Cl3-BZ#18	5.0	U	Cl5-BZ#91	5.0	U
Cl3-BZ#17	5.0	U	Cl6-BZ#155	2.0	U
Cl2-BZ#15	5.0	U	Cl4-BZ#56/#60[1]	5.0	U
Cl3-BZ#24/#27[1]	5.0	U	Cl5-BZ#92	2.0	U
Cl3-BZ#16/#32[1]	5.0	U	Cl5-BZ#101/#84[1]	5.0	U
Cl3-BZ#29	2.0	U	Cl5-BZ#89	5.0	U
Cl4-BZ#54	2.0	U	Cl5-BZ#99	5.0	U
Cl3-BZ#26	2.0	U	Cl5-BZ#119	5.0	U
Cl3-BZ#25	2.0	U	Cl5-BZ#83	2.0	U
Cl3-BZ#28/#31[1]	10	U	Cl5-BZ#97	5.0	U
Cl4-BZ#50	20	U	Cl4-BZ#81	5.0	U
Cl4-BZ#53	2.0	U	Cl5-BZ#87	5.0	U
Cl4-BZ#51	2.0	U	Cl5-BZ#85	5.0	U
Cl3-BZ#21/#33[1]	5.0	U	Cl6-BZ#136	5.0	U
Cl3-BZ#22	5.0	U	Cl4-BZ#77	5.0	U
Cl4-BZ#45	2.0	U	Cl6-BZ#154	5.0	U
Cl4-BZ#46	2.0	U	Cl5-BZ#110	5.0	U
Cl4-BZ#52	2.0	U	Cl5-BZ#82	5.0	U
Cl4-BZ#43/#49[1]	5.0	U	Cl6-BZ#151	2.0	U
Cl4-BZ#47/#48[1]	5.0	U	Cl6-BZ#135/#144[1]	5.0	U
Cl5-BZ#104	5.0	U	Cl5-BZ#124	5.0	U
Cl4-BZ#44	2.0	U	Cl6-BZ#147	5.0	U
Cl4-BZ#42	2.0	U	Cl5-BZ#107	5.0	U
Cl3-BZ#37	2.0	U	Cl5-BZ#123	5.0	U
Cl4-BZ#64	2.0	U	Cl6-BZ#149	5.0	U
Cl4-BZ#41/#71[1]	5.0	U	Cl5-BZ#118	5.0	U

04/14/06 11:57

PCB by GC/MS

ALPHA WOODS HOLE LABS

Client: **BETA Group, Inc.**
Project: **McCoy Field**
Client ID: **GYM 3**
Case: **N/A** SDG: **N/A**
Matrix: **Cartridge**

Lab Code: **MA00030**
ETR: **0604037**
Lab ID: **0604037-02**
Associated Blank: **SC041206B04**
Concentration Units: **ng/Cartridge**

Date Collected	Date Received	Date Extracted	Date Analyzed	Percent Solid	Sample Amount (g)	Final Volume (ml)	Dilution Factor	Analyst
03/31/06	04/07/06	04/05/06	04/12/06	100	1.00	1	1	TLW

Parameter	Result		Parameter	Result	
Cl6-BZ#134	5.0	U	Cl7-BZ#177	5.0	U
Cl5-BZ#114	1.0	U	Cl8-BZ#202	2.0	U
Cl6-BZ#131	5.0	U	Cl7-BZ#171	5.0	U
Cl7-BZ#188	1.0	U	Cl6-BZ#156	1.0	U
Cl6-BZ#146	5.0	U	Cl7-BZ#173	5.0	U
Cl6-BZ#153	5.0	U	Cl8-BZ#200	1.0	U
Cl7-BZ#184	2.0	U	Cl6-BZ#157	1.0	U
Cl6-BZ#132/#168[1]	5.0	U	Cl7-BZ#172	5.0	U
Cl5-BZ#105	5.0	U	Cl8-BZ#197	2.0	U
Cl6-BZ#141	5.0	U	Cl7-BZ#180	5.0	U
Cl6-BZ#137	5.0	U	Cl7-BZ#193	5.0	U
Cl7-BZ#176	5.0	U	Cl7-BZ#191	5.0	U
Cl6-BZ#130	5.0	U	Cl8-BZ#199	5.0	U
Cl6-BZ#138/#163[1]	2.0	U	Cl6-BZ#169	5.0	U
Cl6-BZ#158	5.0	U	Cl7-BZ#170/#190[1]	5.0	U
Cl6-BZ#129	5.0	U	Cl8-BZ#201	5.0	U
Cl7-BZ#178	5.0	U	Cl8-BZ#196/203[1]	5.0	U
Cl5-BZ#126	2.0	U	Cl7-BZ#189	1.0	U
Cl7-BZ#175	2.0	U	Cl9-BZ#208	1.0	U
Cl7-BZ#182/#187[1]	5.0	U	Cl8-BZ#195	5.0	U
Cl7-BZ#183	5.0	U	Cl9-BZ#207	5.0	U
Cl6-BZ#167/#128[1]	5.0	U	Cl8-BZ#194	2.0	U
Cl7-BZ#185	5.0	U	Cl8-BZ#205	5.0	U
Cl7-BZ#174	5.0	U	Cl9-BZ#206	2.0	U
			Cl10-BZ#209	2.0	U

[1] = These two Congeners are reported as a co-eluting pair.

Surrogate	% Recovery	Acceptance Range (%)
Cl3-BZ#19-C13	78	50-125
Cl8-BZ#202-C13	80	50-125

N/A - Not Applicable
U - The analyte was analyzed for but not detected at the sample specific level reported.

04/14/06 11:57

PCB by GC/MS

ALPHA WOODS HOLE LABS

Client: **BETA Group, Inc.**
Project: **McCoy Field**
Client ID: **AUD 2**
Case: **N/A** SDG: **N/A**
Matrix: **Cartridge**

Lab Code: **MA00030**
ETR: **0604037**
Lab ID: **0604037-03**
Associated Blank: **SC041206B04**
Concentration Units: **ng/Cartridge**

Date Collected	Date Received	Date Extracted	Date Analyzed	Percent Solid	Sample Amount (g)	Final Volume (ml)	Dilution Factor	Analyst
03/31/06	04/07/06	04/05/06	04/12/06	100	1.00	1	1	TLW

Parameter	Result		Parameter	Result	
Cl1-BZ#1	2.0	U	Cl5-BZ#100	2.0	U
Cl1-BZ#3	5.0	U	Cl4-BZ#40	5.0	U
Cl2-BZ#4/#10[1]	5.0	U	Cl4-BZ#63	5.0	U
Cl2-BZ#7	2.0	U	Cl4-BZ#74	2.0	U
Cl2-BZ#6	2.0	U	Cl4-BZ#70	2.0	U
Cl2-BZ#5/#8[1]	5.0	U	Cl4-BZ#76	2.0	U
Cl3-BZ#19	5.0	U	Cl4-BZ#66	5.0	U
Cl2-BZ#12/#13[1]	5.0	U	Cl5-BZ#95	5.0	U
Cl3-BZ#18	5.0	U	Cl5-BZ#91	5.0	U
Cl3-BZ#17	5.0	U	Cl6-BZ#155	2.0	U
Cl2-BZ#15	5.0	U	Cl4-BZ#56/#60[1]	5.0	U
Cl3-BZ#24/#27[1]	5.0	U	Cl5-BZ#92	2.0	U
Cl3-BZ#16/#32[1]	5.0	U	Cl5-BZ#101/#84[1]	5.0	U
Cl3-BZ#29	2.0	U	Cl5-BZ#89	5.0	U
Cl4-BZ#54	2.0	U	Cl5-BZ#99	5.0	U
Cl3-BZ#26	2.0	U	Cl5-BZ#119	5.0	U
Cl3-BZ#25	2.0	U	Cl5-BZ#83	2.0	U
Cl3-BZ#28/#31[1]	10	U	Cl5-BZ#97	5.0	U
Cl4-BZ#50	20	U	Cl4-BZ#81	5.0	U
Cl4-BZ#53	2.0	U	Cl5-BZ#87	5.0	U
Cl4-BZ#51	2.0	U	Cl5-BZ#85	5.0	U
Cl3-BZ#21/#33[1]	5.0	U	Cl6-BZ#136	5.0	U
Cl3-BZ#22	5.0	U	Cl4-BZ#77	5.0	U
Cl4-BZ#45	2.0	U	Cl6-BZ#154	5.0	U
Cl4-BZ#46	2.0	U	Cl5-BZ#110	5.0	U
Cl4-BZ#52	2.0	U	Cl5-BZ#82	5.0	U
Cl4-BZ#43/#49[1]	5.0	U	Cl6-BZ#151	2.0	U
Cl4-BZ#47/#48[1]	5.0	U	Cl6-BZ#135/#144[1]	5.0	U
Cl5-BZ#104	5.0	U	Cl5-BZ#124	5.0	U
Cl4-BZ#44	2.0	U	Cl6-BZ#147	5.0	U
Cl4-BZ#42	2.0	U	Cl5-BZ#107	5.0	U
Cl3-BZ#37	2.0	U	Cl5-BZ#123	5.0	U
Cl4-BZ#64	2.0	U	Cl6-BZ#149	5.0	U
Cl4-BZ#41/#71[1]	5.0	U	Cl5-BZ#118	5.0	U

04/14/06 11:59

PCB by GC/MS

ALPHA WOODS HOLE LABS

Client: **BETA Group, Inc.**
Project: **McCoy Field**
Client ID: **AUD 2**
Case: **N/A** SDG: **N/A**
Matrix: **Cartridge**

Lab Code: **MA00030**
ETR: **0604037**
Lab ID: **0604037-03**
Associated Blank: **SC041206B04**
Concentration Units: **ng/Cartridge**

Date Collected	Date Received	Date Extracted	Date Analyzed	Percent Solid	Sample Amount (g)	Final Volume (ml)	Dilution Factor	Analyst
03/31/06	04/07/06	04/05/06	04/12/06	100	1.00	1	1	TLW

Parameter	Result		Parameter	Result	
Cl6-BZ#134	5.0	U	Cl7-BZ#177	5.0	U
Cl5-BZ#114	1.0	U	Cl8-BZ#202	2.0	U
Cl6-BZ#131	5.0	U	Cl7-BZ#171	5.0	U
Cl7-BZ#188	1.0	U	Cl6-BZ#156	1.0	U
Cl6-BZ#146	5.0	U	Cl7-BZ#173	5.0	U
Cl6-BZ#153	5.0	U	Cl8-BZ#200	1.0	U
Cl7-BZ#184	2.0	U	Cl6-BZ#157	1.0	U
Cl6-BZ#132/#168[1]	5.0	U	Cl7-BZ#172	5.0	U
Cl5-BZ#105	5.0	U	Cl8-BZ#197	2.0	U
Cl6-BZ#141	5.0	U	Cl7-BZ#180	5.0	U
Cl6-BZ#137	5.0	U	Cl7-BZ#193	5.0	U
Cl7-BZ#176	5.0	U	Cl7-BZ#191	5.0	U
Cl6-BZ#130	5.0	U	Cl8-BZ#199	5.0	U
Cl6-BZ#138/#163[1]	2.0	U	Cl6-BZ#169	5.0	U
Cl6-BZ#158	5.0	U	Cl7-BZ#170/#190[1]	5.0	U
Cl6-BZ#129	5.0	U	Cl8-BZ#201	5.0	U
Cl7-BZ#178	5.0	U	Cl8-BZ#196/203[1]	5.0	U
Cl5-BZ#126	2.0	U	Cl7-BZ#189	1.0	U
Cl7-BZ#175	2.0	U	Cl9-BZ#208	1.0	U
Cl7-BZ#182/#187[1]	5.0	U	Cl8-BZ#195	5.0	U
Cl7-BZ#183	5.0	U	Cl9-BZ#207	5.0	U
Cl6-BZ#167/#128[1]	5.0	U	Cl8-BZ#194	2.0	U
Cl7-BZ#185	5.0	U	Cl8-BZ#205	5.0	U
Cl7-BZ#174	5.0	U	Cl9-BZ#206	2.0	U
			Cl10-BZ#209	2.0	U

[1] = These two Congeners are reported as a co-eluting pair.

Surrogate	% Recovery	Acceptance Range (%)
Cl3-BZ#19-C13	73	50-125
Cl8-BZ#202-C13	89	50-125

N/A - Not Applicable
U - The analyte was analyzed for but not detected at the sample specific level reported.

04/14/06 11:59

PCB by GC/MS

ALPHA WOODS HOLE LABS

Client: **BETA Group, Inc.**
Project: **McCoy Field**
Client ID: **BUILDING B2**
Case: **N/A** SDG: **N/A**
Matrix: **Cartridge**

Lab Code: **MA00030**
ETR: **0604037**
Lab ID: **0604037-04**
Associated Blank: **SC041206B04**
Concentration Units: **ng/Cartridge**

Date Collected	Date Received	Date Extracted	Date Analyzed	Percent Solid	Sample Amount (g)	Final Volume (ml)	Dilution Factor	Analyst
03/31/06	04/07/06	04/05/06	04/12/06	100	1.00	1	1	TLW

Parameter	Result
Cl1-BZ#1	2.0 U
Cl1-BZ#3	5.0 U
Cl2-BZ#4/#10[1]	5.0 U
Cl2-BZ#7	2.0 U
Cl2-BZ#6	2.0 U
Cl2-BZ#5/#8[1]	5.0 U
Cl3-BZ#19	5.0 U
Cl2-BZ#12/#13[1]	5.0 U
Cl3-BZ#18	5.0 U
Cl3-BZ#17	5.0 U
Cl2-BZ#15	5.0 U
Cl3-BZ#24/#27[1]	5.0 U
Cl3-BZ#16/#32[1]	2.0 U
Cl3-BZ#29	2.0 U
Cl4-BZ#54	2.0 U
Cl3-BZ#26	2.0 U
Cl3-BZ#25	10 U
Cl3-BZ#28/#31[1]	20 U
Cl4-BZ#50	2.0 U
Cl4-BZ#53	2.0 U
Cl4-BZ#51	5.0 U
Cl3-BZ#21/#33[1]	5.0 U
Cl3-BZ#22	2.0 U
Cl4-BZ#45	2.0 U
Cl4-BZ#46	2.0 U
Cl4-BZ#52	5.0 U
Cl4-BZ#43/#49[1]	5.0 U
Cl4-BZ#47/#48[1]	5.0 U
Cl5-BZ#104	2.0 U
Cl4-BZ#44	2.0 U
Cl4-BZ#42	2.0 U
Cl3-BZ#37	2.0 U
Cl4-BZ#64	5.0 U
Cl4-BZ#41/#71[1]	

Parameter	Result
Cl5-BZ#100	2.0 U
Cl4-BZ#40	5.0 U
Cl4-BZ#63	5.0 U
Cl4-BZ#74	2.0 U
Cl4-BZ#70	2.0 U
Cl4-BZ#76	2.0 U
Cl4-BZ#66	5.0 U
Cl5-BZ#95	5.0 U
Cl5-BZ#91	5.0 U
Cl6-BZ#155	2.0 U
Cl4-BZ#56/#60[1]	5.0 U
Cl5-BZ#92	2.0 U
Cl5-BZ#101/#84[1]	5.0 U
Cl5-BZ#89	5.0 U
Cl5-BZ#99	5.0 U
Cl5-BZ#119	5.0 U
Cl5-BZ#83	2.0 U
Cl5-BZ#97	5.0 U
Cl4-BZ#81	5.0 U
Cl5-BZ#87	5.0 U
Cl5-BZ#85	5.0 U
Cl6-BZ#136	5.0 U
Cl4-BZ#77	5.0 U
Cl6-BZ#154	5.0 U
Cl5-BZ#110	5.0 U
Cl5-BZ#82	2.0 U
Cl6-BZ#151	5.0 U
Cl6-BZ#135/#144[1]	5.0 U
Cl5-BZ#124	5.0 U
Cl6-BZ#147	5.0 U
Cl5-BZ#107	5.0 U
Cl5-BZ#123	5.0 U
Cl6-BZ#149	5.0 U
Cl5-BZ#118	

04/14/06 12:00

PCB by GC/MS

ALPHA WOODS HOLE LABS

Client: **BETA Group, Inc.**
Project: **McCoy Field**
Client ID: **BUILDING B2**
Case: **N/A** SDG: **N/A**
Matrix: **Cartridge**

Lab Code: **MA00030**
ETR: **0604037**
Lab ID: **0604037-04**
Associated Blank: **SC041206B04**
Concentration Units: **ng/Cartridge**

Date Collected	Date Received	Date Extracted	Date Analyzed	Percent Solid	Sample Amount (g)	Final Volume (ml)	Dilution Factor	Analyst
03/31/06	04/07/06	04/05/06	04/12/06	100	1.00	1	1	TLW

Parameter	Result		Parameter	Result	
Cl6-BZ#134	5.0	U	Cl7-BZ#177	5.0	U
Cl5-BZ#114	1.0	U	Cl8-BZ#202	2.0	U
Cl6-BZ#131	5.0	U	Cl7-BZ#171	5.0	U
Cl7-BZ#188	1.0	U	Cl6-BZ#156	1.0	U
Cl6-BZ#146	5.0	U	Cl7-BZ#173	5.0	U
Cl6-BZ#153	5.0	U	Cl8-BZ#200	1.0	U
Cl7-BZ#184	2.0	U	Cl6-BZ#157	1.0	U
Cl6-BZ#132/#168[1]	5.0	U	Cl7-BZ#172	5.0	U
Cl5-BZ#105	5.0	U	Cl8-BZ#197	2.0	U
Cl6-BZ#141	5.0	U	Cl7-BZ#180	5.0	U
Cl6-BZ#137	5.0	U	Cl7-BZ#193	5.0	U
Cl7-BZ#176	5.0	U	Cl7-BZ#191	5.0	U
Cl6-BZ#130	5.0	U	Cl8-BZ#199	5.0	U
Cl6-BZ#138/#163[1]	2.0	U	Cl6-BZ#169	5.0	U
Cl6-BZ#158	5.0	U	Cl7-BZ#170/#190[1]	5.0	U
Cl6-BZ#129	5.0	U	Cl8-BZ#201	5.0	U
Cl7-BZ#178	5.0	U	Cl8-BZ#196/203[1]	5.0	U
Cl5-BZ#126	2.0	U	Cl7-BZ#189	1.0	U
Cl7-BZ#175	2.0	U	Cl9-BZ#208	1.0	U
Cl7-BZ#182/#187[1]	5.0	U	Cl8-BZ#195	5.0	U
Cl7-BZ#183	5.0	U	Cl9-BZ#207	5.0	U
Cl6-BZ#167/#128[1]	5.0	U	Cl8-BZ#194	2.0	U
Cl7-BZ#185	5.0	U	Cl8-BZ#205	5.0	U
Cl7-BZ#174	5.0	U	Cl9-BZ#206	2.0	U
			Cl10-BZ#209	2.0	U

[1] = These two Congeners are reported as a co-eluting pair.

Surrogate	% Recovery	Acceptance Range (%)
Cl3-BZ#19-C13	60	50-125
Cl8-BZ#202-C13	83	50-125

N/A - Not Applicable
U - The analyte was analyzed for but not detected at the sample specific level reported.

04/14/06 12:00

Blank
PCB by GC/MS

ALPHA WOODS HOLE LABS

Client: **BETA Group, Inc.**
Project: **McCoy Field**
Client ID: **Blank**
Case: **N/A** SDG: **N/A**
Matrix: **Cartridge**

Lab Code: **MA00030**
ETR: **0604037**
Lab ID: **SC041206B04**
Associated Blank: **N/A**
Concentration Units: **ng/Cartridge**

Date Collected	Date Received	Date Extracted	Date Analyzed	Percent Solid	Sample Amount (g)	Final Volume (ml)	Dilution Factor	Analyst
N/A	N/A	04/05/06	04/12/06	100	1.00	1	1	TLW

Parameter	Result		Parameter	Result	
Cl1-BZ#1	2.0	U	Cl5-BZ#100	2.0	U
Cl1-BZ#3	5.0	U	Cl4-BZ#40	5.0	U
Cl2-BZ#4/#10[1]	5.0	U	Cl4-BZ#63	5.0	U
Cl2-BZ#7	2.0	U	Cl4-BZ#74	2.0	U
Cl2-BZ#6	2.0	U	Cl4-BZ#70	2.0	U
Cl2-BZ#5/#8[1]	5.0	U	Cl4-BZ#76	2.0	U
Cl3-BZ#19	5.0	U	Cl4-BZ#66	5.0	U
Cl2-BZ#12/#13[1]	5.0	U	Cl5-BZ#95	5.0	U
Cl3-BZ#18	5.0	U	Cl5-BZ#91	5.0	U
Cl3-BZ#17	5.0	U	Cl6-BZ#155	2.0	U
Cl2-BZ#15	5.0	U	Cl4-BZ#56/#60[1]	5.0	U
Cl3-BZ#24/#27[1]	5.0	U	Cl5-BZ#92	2.0	U
Cl3-BZ#16/#32[1]	5.0	U	Cl5-BZ#101/#84[1]	5.0	U
Cl3-BZ#29	2.0	U	Cl5-BZ#89	5.0	U
Cl4-BZ#54	2.0	U	Cl5-BZ#99	5.0	U
Cl3-BZ#26	2.0	U	Cl5-BZ#119	5.0	U
Cl3-BZ#25	2.0	U	Cl5-BZ#83	2.0	U
Cl3-BZ#28/#31[1]	10	U	Cl5-BZ#97	5.0	U
Cl4-BZ#50	20	U	Cl4-BZ#81	5.0	U
Cl4-BZ#53	2.0	U	Cl5-BZ#87	5.0	U
Cl4-BZ#51	2.0	U	Cl5-BZ#85	5.0	U
Cl3-BZ#21/#33[1]	5.0	U	Cl6-BZ#136	5.0	U
Cl3-BZ#22	5.0	U	Cl4-BZ#77	5.0	U
Cl4-BZ#45	2.0	U	Cl6-BZ#154	5.0	U
Cl4-BZ#46	2.0	U	Cl5-BZ#110	5.0	U
Cl4-BZ#52	2.0	U	Cl5-BZ#82	5.0	U
Cl4-BZ#43/#49[1]	5.0	U	Cl6-BZ#151	2.0	U
Cl4-BZ#47/#48[1]	5.0	U	Cl6-BZ#135/#144[1]	5.0	U
Cl5-BZ#104	5.0	U	Cl5-BZ#124	5.0	U
Cl4-BZ#44	2.0	U	Cl6-BZ#147	5.0	U
Cl4-BZ#42	2.0	U	Cl5-BZ#107	5.0	U
Cl3-BZ#37	2.0	U	Cl5-BZ#123	5.0	U
Cl4-BZ#64	2.0	U	Cl6-BZ#149	5.0	U
Cl4-BZ#41/#71[1]	5.0	U	Cl5-BZ#118	5.0	U

375 Paramount Drive, Suite 2, Raynham, Massachusetts 02767, (508) 822-9300, Fax (508) 822-3288

Blank
PCB by GC/MS

ALPHA WOODS HOLE LABS

Client: **BETA Group, Inc.**
Project: **McCoy Field**
Client ID: **Blank**
Case: **N/A** SDG: **N/A**
Matrix: **Cartridge**

Lab Code: **MA00030**
ETR: **0604037**
Lab ID: **SC041206B04**
Associated Blank: **N/A**
Concentration Units: **ng/Cartridge**

Date Collected	Date Received	Date Extracted	Date Analyzed	Percent Solid	Sample Amount (g)	Final Volume (ml)	Dilution Factor	Analyst
N/A	N/A	04/05/06	04/12/06	100	1.00	1	1	TLW

Parameter	Result		Parameter	Result	
Cl6-BZ#134	5.0	U	Cl7-BZ#177	5.0	U
Cl5-BZ#114	1.0	U	Cl8-BZ#202	2.0	U
Cl6-BZ#131	5.0	U	Cl7-BZ#171	5.0	U
Cl7-BZ#188	1.0	U	Cl6-BZ#156	1.0	U
Cl6-BZ#146	5.0	U	Cl7-BZ#173	5.0	U
Cl6-BZ#153	5.0	U	Cl8-BZ#200	1.0	U
Cl7-BZ#184	2.0	U	Cl6-BZ#157	1.0	U
Cl6-BZ#132/#168[1]	5.0	U	Cl7-BZ#172	5.0	U
Cl5-BZ#105	5.0	U	Cl8-BZ#197	2.0	U
Cl6-BZ#141	5.0	U	Cl7-BZ#180	5.0	U
Cl6-BZ#137	5.0	U	Cl7-BZ#193	5.0	U
Cl7-BZ#176	5.0	U	Cl7-BZ#191	5.0	U
Cl6-BZ#130	5.0	U	Cl8-BZ#199	5.0	U
Cl6-BZ#138/#163[1]	2.0	U	Cl6-BZ#169	5.0	U
Cl6-BZ#158	5.0	U	Cl7-BZ#170/#190[1]	5.0	U
Cl6-BZ#129	5.0	U	Cl8-BZ#201	5.0	U
Cl7-BZ#178	5.0	U	Cl8-BZ#196/203[1]	5.0	U
Cl5-BZ#126	2.0	U	Cl7-BZ#189	1.0	U
Cl7-BZ#175	2.0	U	Cl9-BZ#208	1.0	U
Cl7-BZ#182/#187[1]	5.0	U	Cl8-BZ#195	5.0	U
Cl7-BZ#183	5.0	U	Cl9-BZ#207	5.0	U
Cl6-BZ#167/#128[1]	5.0	U	Cl8-BZ#194	2.0	U
Cl7-BZ#185	5.0	U	Cl8-BZ#205	5.0	U
Cl7-BZ#174	5.0	U	Cl9-BZ#206	2.0	U
			Cl10-BZ#209	2.0	U

[1] = These two Congeners are reported as a co-eluting pair.

Surrogate	% Recovery	Acceptance Range (%)
Cl3-BZ#19-C13	86	50-125
Cl8-BZ#202-C13	101	50-125

N/A - Not Applicable
U - The analyte was analyzed for but not detected at the sample specific level reported.

04/14/06 11:52

Laboratory Control Sample
PCB by GC/MS

ALPHA WOODS HOLE LABS

Client: **BETA Group, Inc.**
Project: **McCoy Field**
Client ID: **Laboratory Control Sample**
Case: **N/A** SDG: **N/A**
Matrix: **Cartridge**

Lab Code: **MA00030**
ETR: **0604037**
Lab ID: **SC041206L03**
Associated Blank: **SC041206B04**
Concentration Units: **ng/Cartridge**

Date Collected	Date Received	Date Extracted	Percent Solid	Analyst
N/A	N/A	04/05/06	100	TLW

Parameter	Conc.	% Recovery	% Recovery Limits
Cl2-BZ#5/#8[1]	21	51	40-140
Cl3-BZ#18	21	52	40-140
Cl3-BZ#28/#31[1]	42	52	40-140
Cl4-BZ#45	23	58	40-140
Cl4-BZ#52	22	55	40-140
Cl4-BZ#43/#49[1]	26	64	40-140
Cl4-BZ#47/#48[1]	22	55	40-140
Cl4-BZ#44	22	56	40-140
Cl4-BZ#74	22	55	40-140
Cl4-BZ#70	26	64	40-140
Cl4-BZ#66	23	59	40-140
Cl5-BZ#95	21	53	40-140
Cl4-BZ#56/#60[1]	22	56	40-140
Cl5-BZ#101/#84[1]	26	64	40-140
Cl5-BZ#99	23	57	40-140
Cl4-BZ#81	23	57	40-140
Cl5-BZ#87	23	58	40-140
Cl4-BZ#77	23	57	40-140
Cl5-BZ#110	22	55	40-140
Cl6-BZ#151	24	61	40-140
Cl5-BZ#123	26	65	40-140
Cl6-BZ#149	24	59	40-140
Cl5-BZ#118	26	65	40-140
Cl5-BZ#114	24	60	40-140
Cl6-BZ#146	25	63	40-140
Cl6-BZ#153	24	61	40-140
Cl5-BZ#105	23	58	40-140
Cl6-BZ#138/#163[1]	22	55	40-140
Cl6-BZ#158	26	65	40-140
Cl5-BZ#126	28	71	40-140
Cl7-BZ#182/#187[1]	26	65	40-140
Cl7-BZ#183	24	61	40-140
Cl6-BZ#167/#128[1]	51	64	40-140

04/14/06 11:50

Laboratory Control Sample
PCB by GC/MS

ALPHA WOODS HOLE LABS

Client: **BETA Group, Inc.**
Project: **McCoy Field**
Client ID: **Laboratory Control Sample**
Case: **N/A** SDG: **N/A**
Matrix: **Cartridge**

Lab Code: **MA00030**
ETR: **0604037**
Lab ID: **SC041206L03**
Associated Blank: **SC041206B04**
Concentration Units: **ng/Cartridge**

Date Collected	Date Received	Date Extracted	Percent Solid	Analyst
N/A	N/A	04/05/06	100	TLW

Parameter	Conc.	% Recovery	% Recovery Limits
Cl7-BZ#174	25	62	40-140
Cl7-BZ#177	24	61	40-140
Cl6-BZ#156	25	62	40-140
Cl6-BZ#157	25	63	40-140
Cl7-BZ#180	24	60	40-140
Cl6-BZ#169	25	63	40-140
Cl7-BZ#170/#190[1]	21	52	40-140
Cl8-BZ#201	24	60	40-140
Cl7-BZ#189	26	66	40-140
Cl8-BZ#195	25	62	40-140
Cl8-BZ#194	24	60	40-140
Cl9-BZ#206	27	67	40-140
Cl10-BZ#209	25	62	40-140

[1] = These two Congeners are reported as a co-eluting pair.

Surrogate	% Recovery		Acceptance Range (%)
Cl3-BZ#19-C13	47	§	50-125
Cl8-BZ#202-C13	62		50-125

N/A - Not Applicable
§ - Surrogate value outside of acceptable range.

Concentrations reported as calculated values, which includes rounding for significant figures. Percent recoveries and RPD values are calculated from the unrounded result.

04/14/06 11:51

AIR ANALYSIS

PAGE 1 OF

CHAIN OF CUSTODY

Eight Walkup Drive Westborough, MA 01581
TEL: 508-898-9220 FAX: 508-898-9193

Date Rec'd In Lab: 3/31/06

ALPHA Job #: L0604550

Client Information

Client: BETA Group, Inc.
Address: 315 Norwood Park South
Norwood MA 02062
Phone: 781-255-1982
Fax: 781-255 1974
Email: tdowney@beta-inc.com
☐ These samples have been previously analyzed by Alpha

Project Information

Project Name: McCoy Field
Project Location: New Bedford, MA
Project #: 02685
Project Manager: Dave Billo
ALPHA Quote #:

Turn-Around Time

☑ Standard 5 DAYS TO-13: 10 DAYS ☐ RUSH (only confirmed if pre-approved!)
Date Due: ~~4/10/06~~ 4/14/06 (6K) Time:

Report Information - Data Deliverables

☐ FAX
☑ ADEx
Criteria Checker: (Default based on Regulatory Criteria Indicated)
Other Formats:
☑ EMAIL (standard pdf report)
☐ Additional Deliverables:
Report to: (if different than Project Manager)

Billing Information

☐ Same as Client info PO #:

Regulatory Requirements/Report Limits

State /Fed	Program	Criteria

Other Project Specific Requirements/Comments:

ANALYSIS

ALPHA Lab ID (Lab Use Only)	Sample ID	Collection Date	Start Time	End Time	Sample Matrix	Sampler's Initials	ID Can	ID - Flow Controller	TO-14A	TO-15	APH	DISSOLVED GASES	FIXED GASES	TO-13A	TO-15 SULFIDES/MERCAPTANS	DISS GASES CO2 ONLY	TO-13	TO-4	Sample Comments	TOTAL # CONTAINERS
~~L0604550-01~~	Gym B2	3/30/06	0950	1404	SV	JMD	0245			X										1
~~02~~	Gym B3	3/30/06	0950	1404			0113			X										1
~~03~~	Aud 2	3/31/06	0807	1230			0146			X										1
~~04~~	Building B2	3/31/06	0850	1250			0116			X										1
4550.01	Gym B2		1014	1114												X	X		0.5 LPM	2
~~02~~	Gym B3		1006	1058												X	X			2
~~03~~	Aud 2		1247	1410												X	X			2
~~04~~	Building B2		1255	1507												X	X			2
								Container Type		CS						✓	✓			

Shaded Gray Areas For Lab Use Only

Please print clearly, legibly and completely. Samples can not be logged in and turnaround time clock will not start until any ambiguities are resolved. All samples submitted are subject to Alpha's Payment Terms. See reverse side.

Relinquished By:	Date/Time	Received By:	Date/Time
[illegible]	3/31/06 1530	[illegible]	3/31/06 1530
[illegible]	3/31/06 1632	[illegible]	3/31/06 1632
[illegible]	3/31/06 1800	[illegible]	3/31/06 1800

Form No: 01-03 (rev. 8-JUN-05)

ALPHA ANALYTICAL LABORATORIES, INC.
LOGIN CHAIN OF CUSTODY REPORT
Apr 10 2006, 10:56 am

Login Number: L0604550
Account: BETA Beta Engineering, Inc. Project: 02685
Received: 03APR06 Due Date: 07APR06

Sample #	Client ID	Mat	PR	Collected	Container
L0604550-01	GYM 2	12	S0	31MAR06 11:14	1-PUF-PCB-L

Bottle Order #26465. TO10: PCB Extraction to be performed in Westboro, Analysis to be done in Raynham. Please Coordinate with Login when extraction complete. job split w/4544

PUF-EXT,PUF-LO

L0604550-02	GYM 3	12	S0	31MAR06 10:58	1-PUF-PCB-L

Bottle Order #26465. TO-10: PCB Extraction to be performed in Westboro, Analysis to be done in Raynham. Please Coordinate with Login when extraction complete. job split w/4544

PUF-EXT,PUF-LO

L0604550-03	AUD 2	12	S0	31MAR06 14:10	1-PUF-PCB-L

Bottle Order #26465. TO-10: PCB Extraction to be performed in Westboro, Analysis to be done in Raynham. Please Coordinate with Login when extraction complete. job split w/4544

PUF-EXT,PUF-LO

L0604550-04	BUILDING B2	12	S0	31MAR06 15:07	1-PUF-PCB-L

Bottle Order #26465. TO-10: PCB Extraction to be performed in Westboro, Analysis to be done in Raynham. Please Coordinate with Login when extraction complete. job split w/4544

PUF-EXT,PUF-LO

L0604550-05	UNUSED PUF	12	S0		1-PUF-PCB-L

Bottle Order #26465. job split w/4544

PUF-LO

L0604550-06	UNUSED PUF	12	S0		1-PUF-PCB-L

Bottle Order #26465. job split w/4544

PUF-LO

L0604550-07	UNUSED PUF	12	S0		1-PUF-PCB-L

Bottle Order #26465. job split w/4544

ALPHA ANALYTICAL LABORATORIES, INC.
LOGIN CHAIN OF CUSTODY REPORT
Apr 10 2006, 10:56 am

Login Number: L0604550
Account: BETA Beta Engineering, Inc. Project: 02685
Received: 03APR06 Due Date: 07APR06

Sample #	Client ID	Mat	PR	Collected	Container
PUF-LO					

Logged By: Mary Davis

Certificate Program Summary

Method numbers assume the most recent EPA revisions. For a complete listing of analytes for the referenced methods please contact your Alpha Woods Hole Lab Project Manager or the Quality Assurance Manager.

Connecticut Department of Public Health Certificate No. : PH-0141 - *Wastewater* (General Chemistry: 120.1, 150.1, 160.1, 160.2, 180.1, 300.0, 310.1, 335.2, 365.2, 405.1, 413.1, COD HACH 8000; Metals: 200.7, 245.1; Organics: 608, 624, 625). *Solid Waste/Soil* (General Chemistry: 1010, 9010/9014, 9045, 9056, 9060; Metals: 6010, 6020, 7041, 7471; Organics: 8081, 8082, 8260, 8270, ETPH).

Florida Department of Health Certificate No. : E87814 - Secondary NELAP Accreditation for *Wastewater* (General Chemistry: 120.1/2510B, 150.1, 160.1/SM2540C, 160.2/SM2540D, 180.1, 300.0, SM2320B, 335.2, 365.2, 413.1, 420.1, SM2540G, COD HACH 8000; Metals: 200.7, 204.2, 206.2, 239.2, 245.1, 270.2, 279.2; Organics: 608, 624, 625). *Solid and Hazardous Waste* (General Chemistry: 9010/9014, 9045, 9050, 9056, 9060, 9065; Metals: 6010, 6020, 7041, 7060, 7421, 7470, 7471, 7740, 7841; Organics: 8081, 8082, 8260, 8270).

Louisiana Department of Environmental Quality Certificate No. : 03090 - Primary NELAP Accrediting Authority for *Wastewater* (General Chemistry: 120.1/2510B, 150.1, 160.1/SM2540C, 160.2/SM2540D, 180.1, 300.0, 310.1/SM2320B, 335.2, 365.2, 376.2, 405.1, 413.1, 420.1, SM2540G, COD HACH 8000; Metals: 200.7, 204.2, 206.2, 239.2, 245.1, 270.2, 279.2; Organics: 608, 624, 625). *Solid and Hazardous Waste* (General Chemistry:1010, 1311, 9010/9014, 9045, 9056, 9060; Metals: 6010, 6020, 7041, 7060, 7191, 7421, 7470, 7471, 7740, 7841; Organics: 8081, 8082, 8260, 8270).

Maine Department of Human Services Certificate No. : MA030 - *Wastewater* (General Chemistry: 120.1/2510B, 150.1, 160.1/SM2540C, 160.2/SM2540D, 180.1, 300.0, 310.1/SM2320B, 335.2, 365.2, 405.1, 413.1, 420.1, COD HACH 8000; Metals: 200.7, 239.2, 245.1, 270.2, 279.2; Organics: 608, 624).

Massachusetts Department of Environmental Protection Certificate No. : M-MA030 - *Wastewater* (General Chemistry: 120.1/2510B, 150.1, 160.1/SM2540C, 160.2/SM2540D, 180.1, 300.0, 310.1/SM2320B, 335.2, 365.2, 405.1, 413.1, 420.1, COD HACH 8000; Metals: 200.7, 239.2, 245.1, 270.2, 279.2; Organics: 608, 624).

New Hampshire Department of Environmental Services Certificate No. : 220604 - Secondary NELAP Accreditation for *Wastewater* (General Chemistry: 120.1/2510B, 150.1, 160.1/SM2540C, 160.2/SM2540D, 180.1, 300.0, 310.1/SM2320B, 335.2, 365.2, 376.2, 405.1, 413.1, 420.1, COD HACH 8000, SM2540G; Metals: 200.7, 204.2, 206.2, 239.2, 245.1, 270.2, 279.2; Organics: 608, 624, 625).

New Jersey Department of Environmental Protection Certificate No. : MA015 - *Solid and Hazardous Waste* (General Chemistry: 1010, 1311, 3060, 7196, 9010/9014, 9045, 9056, 9060; Metals: 3010, 3015, 3020, 3050, 3051, 6010, 6020, 7041, 7060, 7131, 7191, 7211, 7421, 7470, 7471, 7520, 7740, 7761, 7841; Organics: 3510, 3545, 5030, 5035, 3620, 3630, 3640, 3660, 8081, 8082, 8100, 8260, 8270).

New York Department of Health Certificate No. : 11627 - Secondary NELAP Accreditation for *Wastewater* (Metals: 200.7, 204.2, 206.2, 239.2, 245.1, 270.2, 279.2; Organics: 608, 624, 625). *Solid and Hazardous Waste* (Metals: 6010, 7041, 7060, 7470, 7471, 7740; Organics: 8081, 8082, 8260, 8270).

Rhode Island Department of Health Certificate No. : 00064 - Chemistry: *Organic and Inorganic in Surface Water, Wastewater/Sewage and Soil* (Method numbers not specified with certificate.)

U.S. Army Corps of Engineers - General Chemistry: 9010/9014, 9071/418.1, 9060; Organics: 8081, 8082, 8260, 8270, 8270-SIM; Metals: 6010, 6020, 7000.

Department of the Navy - General Chemistry: 9010/9014, 9060; Organics: 8081, 8082, 8015-mod, 8260, 8270, 8270-SIM; Metals: 6010, 6020.

ALPHA ANALYTICAL LABORATORIES

Eight Walkup Drive
Westborough, Massachusetts 01581-1019
(508) 898-9220 www.alphalab.com

MA:M-MA086 NH:200301-A CT:PH-0574 ME:MA086 RI:65 NY:11148 NJ:MA935 Army:USACE

CERTIFICATE OF ANALYSIS

Client: Beta Engineering, Inc.

Address: 315 Norwood Park South

Norwood, MA 02062

Attn: Mr. Tim Downey

Project Number: 02685

Site: MCCOY FIELD

Laboratory Job Number: L0604544

Date Received: 31-MAR-2006

Date Reported: 14-APR-2006

Delivery Method: Alpha

ALPHA SAMPLE NUMBER	CLIENT IDENTIFICATION	SAMPLE LOCATION
L0604544-01	GYM 2	NEW BEDFORD, MA
L0604544-02	GYM 3	NEW BEDFORD, MA
L0604544-03	AUD 2	NEW BEDFORD, MA
L0604544-04	BUILDING B2	NEW BEDFORD, MA
L0604544-05	GYM 2	NEW BEDFORD, MA
L0604544-06	GYM 3	NEW BEDFORD, MA
L0604544-07	AUD 2	NEW BEDFORD, MA
L0604544-08	BUILDING B 2	NEW BEDFORD, MA
L0604544-09	UNUSED CANISTER 1	NEW BEDFORD, MA
L0604544-10	UNUSED CANISTER 2	NEW BEDFORD, MA
L0604544-11	UNUSED CANISTER 3	NEW BEDFORD, MA
L0604544-12	UNUSED PUFS	NEW BEDFORD, MA
L0604544-13	UNUSED PUFS	NEW BEDFORD, MA
L0604544-14	UNUSED PUFS	NEW BEDFORD, MA

I, the undersigned, attest under the pains and penalties of perjury that, based upon my personal inquiry of those responsible for obtaining the information, the material contained in this report is, to the best of my knowledge and belief, accurate and complete. This certificate of analysis is not complete unless this page accompanies any and all pages of this report.

Authorized by:_____
Technical Director

ALPHA ANALYTICAL LABORATORIES
NARRATIVE REPORT

Laboratory Job Number: L0604544

Organic Compounds in Air

In order to comply with various regulatory requirements, the results for the analysis of Organic Compounds in Air by EPA TO-14A or TO-15 are provided in ug/m3 as well as ppbv for each sample in a sequential format.

TO15

The following samples have elevated limits of detection due to the dilutions required by the elevated concentrations of target compounds in the samples:

L0604544-01, -02, -04 (10X)

L0604478-05, -09 (2X)

The following samples have elevated limits of detection due to the dilutions required by the elevated concentrations of non-target compounds in the samples:

L0604478-01 thru -04, -06 thru -08, and -10 (2X)

The WG235470-4 LCS has low recoveries for 3-chloropropene, vinyl acetate, and trans-1,3-chloropropene. This LCS also has a high recovery for 1,1,2,2-tetrachloroethane.

ALPHA ANALYTICAL LABORATORIES
CERTIFICATE OF ANALYSIS

MA:M-MA086 NH:200301-A CT:PH-0574 ME:MA086 RI:65 NY:11148 NJ:MA935 Army:USACE

Laboratory Sample Number: L0604544-01
GYM 2
Sample Matrix: SOIL_VAPOR

Date Collected: 30-MAR-2006 14:04
Date Received : 31-MAR-2006
Date Reported : 14-APR-2006

Condition of Sample: Satisfactory

Field Prep: None

Number & Type of Containers: 1-Can

PARAMETER	RESULT	UNITS	RDL	REF METHOD	DATE PREP	DATE ANAL	ID
Volatile Organic Compounds in Air - ug/m3				48 TO-15		0413 15:09	PS
1,1,1-Trichloroethane	ND	ug/m3	27.2				
1,1,2,2-Tetrachloroethane	ND	ug/m3	34.3				
1,1,2-Trichloroethane	ND	ug/m3	27.2				
1,1-Dichloroethane	ND	ug/m3	20.2				
1,1-Dichloroethene	ND	ug/m3	19.8				
1,2,4-Trichlorobenzene	ND	ug/m3	37.1				
1,2,4-Trimethylbenzene	ND	ug/m3	24.6				
1,2-Dibromoethane	ND	ug/m3	38.4				
1,2-Dichlorobenzene	ND	ug/m3	30.0				
1,2-Dichloroethane	ND	ug/m3	20.2				
1,2-Dichloropropane	ND	ug/m3	23.1				
1,3,5-Trimethylbenzene	ND	ug/m3	24.6				
1,3-Butadiene	ND	ug/m3	11.0				
1,3-Dichlorobenzene	ND	ug/m3	30.0				
1,4-Dichlorobenzene	ND	ug/m3	30.0				
1,4-Dioxane	ND	ug/m3	36.0				
2,2,4-Trimethylpentane	1230	ug/m3	23.3				
2-Butanone	1010	ug/m3	14.7				
2-Hexanone	ND	ug/m3	20.5				
3-Chloropropene	ND	ug/m3	15.6				
4-Ethyltoluene	ND	ug/m3	24.6				
Acetone	1140	ug/m3	47.5				
Benzene	ND	ug/m3	16.0				
Benzyl chloride	ND	ug/m3	25.9				
Bromodichloromethane	ND	ug/m3	33.5				
Bromoform	ND	ug/m3	51.6				
Bromomethane	ND	ug/m3	19.4				
Carbon disulfide	ND	ug/m3	15.6				
Carbon tetrachloride	ND	ug/m3	31.4				
Chlorobenzene	ND	ug/m3	23.0				
Chloroethane	ND	ug/m3	13.2				
Chloroform	ND	ug/m3	24.4				
Chloromethane	ND	ug/m3	10.3				
cis-1,2-Dichloroethene	ND	ug/m3	19.8				
cis-1,3-Dichloropropene	ND	ug/m3	22.7				
Cyclohexane	ND	ug/m3	17.2				
Dibromochloromethane	ND	ug/m3	42.6				
Dichlorodifluoromethane	ND	ug/m3	49.4				

Comments: Complete list of References and Glossary of Terms found in Addendum I

ALPHA ANALYTICAL LABORATORIES
CERTIFICATE OF ANALYSIS

Laboratory Sample Number: L0604544-01
GYM 2

PARAMETER	RESULT	UNITS	RDL	REF METHOD	DATE PREP	DATE ANAL	ID
Volatile Organic Compounds in Air - ug/m3 cont'd				48 TO-15		0413 15:09	PS
Ethyl Alcohol	ND	ug/m3	37.6				
Ethyl Acetate	ND	ug/m3	18.0				
Ethylbenzene	ND	ug/m3	21.7				
1,1,2-Trichloro-1,2,2-Trifluoroethane	ND	ug/m3	38.3				
1,2-Dichloro-1,1,2,2-tetrafluoroethane	ND	ug/m3	34.9				
Hexachlorobutadiene	ND	ug/m3	53.3				
iso-Propyl Alcohol	ND	ug/m3	12.3				
Methylene chloride	65.2	ug/m3	34.7				
4-Methyl-2-pentanone	ND	ug/m3	20.5				
Methyl tert butyl ether	68.5	ug/m3	18.0				
p/m-Xylene	ND	ug/m3	43.4				
o-Xylene	ND	ug/m3	21.7				
Heptane	ND	ug/m3	20.5				
n-Hexane	ND	ug/m3	35.2				
Propylene	ND	ug/m3	17.2				
Styrene	ND	ug/m3	21.3				
Tetrachloroethene	84.5	ug/m3	33.9				
Tetrahydrofuran	378	ug/m3	14.7				
Toluene	ND	ug/m3	18.8				
trans-1,2-Dichloroethene	ND	ug/m3	19.8				
trans-1,3-Dichloropropene	ND	ug/m3	22.7				
Trichloroethene	ND	ug/m3	26.8				
Trichlorofluoromethane	ND	ug/m3	28.1				
Vinyl acetate	ND	ug/m3	17.6				
Vinyl bromide	ND	ug/m3	21.8				
Vinyl chloride	ND	ug/m3	12.8				
Volatile Organic Compounds in Air - ppbV				48 TO-15		0413 15:09	PS
1,1,1-Trichloroethane	ND	ppbV	5.00				
1,1,2,2-Tetrachloroethane	ND	ppbV	5.00				
1,1,2-Trichloroethane	ND	ppbV	5.00				
1,1-Dichloroethane	ND	ppbV	5.00				
1,1-Dichloroethene	ND	ppbV	5.00				
1,2,4-Trichlorobenzene	ND	ppbV	5.00				
1,2,4-Trimethylbenzene	ND	ppbV	5.00				
1,2-Dibromoethane	ND	ppbV	5.00				
1,2-Dichlorobenzene	ND	ppbV	5.00				
1,2-Dichloroethane	ND	ppbV	5.00				
1,2-Dichloropropane	ND	ppbV	5.00				
1,3,5-Trimethylbenzene	ND	ppbV	5.00				
1,3-Butadiene	ND	ppbV	5.00				
1,3-Dichlorobenzene	ND	ppbV	5.00				
1,4-Dichlorobenzene	ND	ppbV	5.00				
1,4-Dioxane	ND	ppbV	10.0				
2,2,4-Trimethylpentane	264	ppbV	5.00				
2-Butanone	344	ppbV	5.00				
2-Hexanone	ND	ppbV	5.00				

Comments: Complete list of References and Glossary of Terms found in Addendum I

ALPHA ANALYTICAL LABORATORIES
CERTIFICATE OF ANALYSIS

Laboratory Sample Number: L0604544-01
GYM 2

PARAMETER	RESULT	UNITS	RDL	REF METHOD	DATE PREP	DATE ANAL	ID
Volatile Organic Compounds in Air - ppbV cont'd				48 TO-15		0413 15:09	PS
3-Chloropropene	ND	ppbV	5.00				
4-Ethyltoluene	ND	ppbV	5.00				
Acetone	481	ppbV	20.0				
Benzene	ND	ppbV	5.00				
Benzyl chloride	ND	ppbV	5.00				
Bromodichloromethane	ND	ppbV	5.00				
Bromoform	ND	ppbV	5.00				
Bromomethane	ND	ppbV	5.00				
Carbon disulfide	ND	ppbV	5.00				
Carbon tetrachloride	ND	ppbV	5.00				
Chlorobenzene	ND	ppbV	5.00				
Chloroethane	ND	ppbV	5.00				
Chloroform	ND	ppbV	5.00				
Chloromethane	ND	ppbV	5.00				
cis-1,2-Dichloroethene	ND	ppbV	5.00				
cis-1,3-Dichloropropene	ND	ppbV	5.00				
Cyclohexane	ND	ppbV	5.00				
Dibromochloromethane	ND	ppbV	5.00				
Dichlorodifluoromethane	ND	ppbV	10.0				
Ethyl Alcohol	ND	ppbV	20.0				
Ethyl Acetate	ND	ppbV	5.00				
Ethylbenzene	ND	ppbV	5.00				
1,1,2-Trichloro-1,2,2-Trifluoroethane	ND	ppbV	5.00				
1,2-Dichloro-1,1,2,2-tetrafluoroethane	ND	ppbV	5.00				
Hexachlorobutadiene	ND	ppbV	5.00				
iso-Propyl Alcohol	ND	ppbV	5.00				
Methylene chloride	18.8	ppbV	10.0				
4-Methyl-2-pentanone	ND	ppbV	5.00				
Methyl tert butyl ether	19.0	ppbV	5.00				
p/m-Xylene	ND	ppbV	10.0				
o-Xylene	ND	ppbV	5.00				
Heptane	ND	ppbV	5.00				
n-Hexane	ND	ppbV	10.0				
Propylene	ND	ppbV	10.0				
Styrene	ND	ppbV	5.00				
Tetrachloroethene	12.5	ppbV	5.00				
Tetrahydrofuran	128	ppbV	5.00				
Toluene	ND	ppbV	5.00				
trans-1,2-Dichloroethene	ND	ppbV	5.00				
trans-1,3-Dichloropropene	ND	ppbV	5.00				
Trichloroethene	ND	ppbV	5.00				
Trichlorofluoromethane	ND	ppbV	5.00				
Vinyl acetate	ND	ppbV	5.00				
Vinyl bromide	ND	ppbV	5.00				
Vinyl chloride	ND	ppbV	5.00				

Comments: Complete list of References and Glossary of Terms found in Addendum I

ALPHA ANALYTICAL LABORATORIES
CERTIFICATE OF ANALYSIS

MA:M-MA086 NH:200301-A CT:PH-0574 ME:MA086 RI:65 NY:11148 NJ:MA935 Army:USACE

Laboratory Sample Number: L0604544-02
GYM 3
Sample Matrix: SOIL_VAPOR

Date Collected: 30-MAR-2006 14:04
Date Received : 31-MAR-2006
Date Reported : 14-APR-2006

Condition of Sample: Satisfactory

Field Prep: None

Number & Type of Containers: 1-Can

PARAMETER	RESULT	UNITS	RDL	REF METHOD	DATE PREP	DATE ANAL	ID
Volatile Organic Compounds in Air - ug/m3				48 TO-15		0413 15:45	PS
1,1,1-Trichloroethane	ND	ug/m3	27.2				
1,1,2,2-Tetrachloroethane	ND	ug/m3	34.3				
1,1,2-Trichloroethane	ND	ug/m3	27.2				
1,1-Dichloroethane	ND	ug/m3	20.2				
1,1-Dichloroethene	ND	ug/m3	19.8				
1,2,4-Trichlorobenzene	ND	ug/m3	37.1				
1,2,4-Trimethylbenzene	ND	ug/m3	24.6				
1,2-Dibromoethane	ND	ug/m3	38.4				
1,2-Dichlorobenzene	ND	ug/m3	30.0				
1,2-Dichloroethane	ND	ug/m3	20.2				
1,2-Dichloropropane	ND	ug/m3	23.1				
1,3,5-Trimethylbenzene	ND	ug/m3	24.6				
1,3-Butadiene	ND	ug/m3	11.0				
1,3-Dichlorobenzene	ND	ug/m3	30.0				
1,4-Dichlorobenzene	ND	ug/m3	30.0				
1,4-Dioxane	ND	ug/m3	36.0				
2,2,4-Trimethylpentane	703	ug/m3	23.3				
2-Butanone	269	ug/m3	14.7				
2-Hexanone	ND	ug/m3	20.5				
3-Chloropropene	ND	ug/m3	15.6				
4-Ethyltoluene	ND	ug/m3	24.6				
Acetone	474	ug/m3	47.5				
Benzene	ND	ug/m3	16.0				
Benzyl chloride	ND	ug/m3	25.9				
Bromodichloromethane	ND	ug/m3	33.5				
Bromoform	ND	ug/m3	51.6				
Bromomethane	ND	ug/m3	19.4				
Carbon disulfide	ND	ug/m3	15.6				
Carbon tetrachloride	ND	ug/m3	31.4				
Chlorobenzene	ND	ug/m3	23.0				
Chloroethane	ND	ug/m3	13.2				
Chloroform	ND	ug/m3	24.4				
Chloromethane	ND	ug/m3	10.3				
cis-1,2-Dichloroethene	ND	ug/m3	19.8				
cis-1,3-Dichloropropene	ND	ug/m3	22.7				
Cyclohexane	19.7	ug/m3	17.2				
Dibromochloromethane	ND	ug/m3	42.6				
Dichlorodifluoromethane	ND	ug/m3	49.4				

Comments: Complete list of References and Glossary of Terms found in Addendum I

ALPHA ANALYTICAL LABORATORIES
CERTIFICATE OF ANALYSIS

Laboratory Sample Number: L0604544-02
GYM 3

PARAMETER	RESULT	UNITS	RDL	REF METHOD	DATE PREP	DATE ANAL	ID
Volatile Organic Compounds in Air - ug/m3 cont'd				48 TO-15		0413 15:45	PS
Ethyl Alcohol	ND	ug/m3	37.6				
Ethyl Acetate	ND	ug/m3	18.0				
Ethylbenzene	ND	ug/m3	21.7				
1,1,2-Trichloro-1,2,2-Trifluoroethane	ND	ug/m3	38.3				
1,2-Dichloro-1,1,2,2-tetrafluoroethane	ND	ug/m3	34.9				
Hexachlorobutadiene	ND	ug/m3	53.3				
iso-Propyl Alcohol	ND	ug/m3	12.3				
Methylene chloride	ND	ug/m3	34.7				
4-Methyl-2-pentanone	ND	ug/m3	20.5				
Methyl tert butyl ether	238	ug/m3	18.0				
p/m-Xylene	ND	ug/m3	43.4				
o-Xylene	ND	ug/m3	21.7				
Heptane	ND	ug/m3	20.5				
n-Hexane	50.2	ug/m3	35.2				
Propylene	ND	ug/m3	17.2				
Styrene	ND	ug/m3	21.3				
Tetrachloroethene	ND	ug/m3	33.9				
Tetrahydrofuran	102	ug/m3	14.7				
Toluene	ND	ug/m3	18.8				
trans-1,2-Dichloroethene	ND	ug/m3	19.8				
trans-1,3-Dichloropropene	ND	ug/m3	22.7				
Trichloroethene	ND	ug/m3	26.8				
Trichlorofluoromethane	ND	ug/m3	28.1				
Vinyl acetate	ND	ug/m3	17.6				
Vinyl bromide	ND	ug/m3	21.8				
Vinyl chloride	ND	ug/m3	12.8				
Volatile Organic Compounds in Air - ppbV				48 TO-15		0413 15:45	PS
1,1,1-Trichloroethane	ND	ppbV	5.00				
1,1,2,2-Tetrachloroethane	ND	ppbV	5.00				
1,1,2-Trichloroethane	ND	ppbV	5.00				
1,1-Dichloroethane	ND	ppbV	5.00				
1,1-Dichloroethene	ND	ppbV	5.00				
1,2,4-Trichlorobenzene	ND	ppbV	5.00				
1,2,4-Trimethylbenzene	ND	ppbV	5.00				
1,2-Dibromoethane	ND	ppbV	5.00				
1,2-Dichlorobenzene	ND	ppbV	5.00				
1,2-Dichloroethane	ND	ppbV	5.00				
1,2-Dichloropropane	ND	ppbV	5.00				
1,3,5-Trimethylbenzene	ND	ppbV	5.00				
1,3-Butadiene	ND	ppbV	5.00				
1,3-Dichlorobenzene	ND	ppbV	5.00				
1,4-Dichlorobenzene	ND	ppbV	5.00				
1,4-Dioxane	ND	ppbV	10.0				
2,2,4-Trimethylpentane	151	ppbV	5.00				
2-Butanone	91.2	ppbV	5.00				
2-Hexanone	ND	ppbV	5.00				

Comments: Complete list of References and Glossary of Terms found in Addendum I

ALPHA ANALYTICAL LABORATORIES
CERTIFICATE OF ANALYSIS

Laboratory Sample Number: L0604544-02
GYM 3

PARAMETER	RESULT	UNITS	RDL	REF METHOD	DATE PREP	DATE ANAL	ID
Volatile Organic Compounds in Air - ppbV cont'd				48 TO-15		0413 15:45	PS
3-Chloropropene	ND	ppbV	5.00				
4-Ethyltoluene	ND	ppbV	5.00				
Acetone	200	ppbV	20.0				
Benzene	ND	ppbV	5.00				
Benzyl chloride	ND	ppbV	5.00				
Bromodichloromethane	ND	ppbV	5.00				
Bromoform	ND	ppbV	5.00				
Bromomethane	ND	ppbV	5.00				
Carbon disulfide	ND	ppbV	5.00				
Carbon tetrachloride	ND	ppbV	5.00				
Chlorobenzene	ND	ppbV	5.00				
Chloroethane	ND	ppbV	5.00				
Chloroform	ND	ppbV	5.00				
Chloromethane	ND	ppbV	5.00				
cis-1,2-Dichloroethene	ND	ppbV	5.00				
cis-1,3-Dichloropropene	ND	ppbV	5.00				
Cyclohexane	5.74	ppbV	5.00				
Dibromochloromethane	ND	ppbV	5.00				
Dichlorodifluoromethane	ND	ppbV	10.0				
Ethyl Alcohol	ND	ppbV	20.0				
Ethyl Acetate	ND	ppbV	5.00				
Ethylbenzene	ND	ppbV	5.00				
1,1,2-Trichloro-1,2,2-Trifluoroethane	ND	ppbV	5.00				
1,2-Dichloro-1,1,2,2-tetrafluoroethane	ND	ppbV	5.00				
Hexachlorobutadiene	ND	ppbV	5.00				
iso-Propyl Alcohol	ND	ppbV	5.00				
Methylene chloride	ND	ppbV	10.0				
4-Methyl-2-pentanone	ND	ppbV	5.00				
Methyl tert butyl ether	66.2	ppbV	5.00				
p/m-Xylene	ND	ppbV	10.0				
o-Xylene	ND	ppbV	5.00				
Heptane	ND	ppbV	5.00				
n-Hexane	14.3	ppbV	10.0				
Propylene	ND	ppbV	10.0				
Styrene	ND	ppbV	5.00				
Tetrachloroethene	ND	ppbV	5.00				
Tetrahydrofuran	34.6	ppbV	5.00				
Toluene	ND	ppbV	5.00				
trans-1,2-Dichloroethene	ND	ppbV	5.00				
trans-1,3-Dichloropropene	ND	ppbV	5.00				
Trichloroethene	ND	ppbV	5.00				
Trichlorofluoromethane	ND	ppbV	5.00				
Vinyl acetate	ND	ppbV	5.00				
Vinyl bromide	ND	ppbV	5.00				
Vinyl chloride	ND	ppbV	5.00				

Comments: Complete list of References and Glossary of Terms found in Addendum I

ALPHA ANALYTICAL LABORATORIES
CERTIFICATE OF ANALYSIS

MA:M-MA086 NH:200301-A CT:PH-0574 ME:MA086 RI:65 NY:11148 NJ:MA935 Army:USACE

Laboratory Sample Number: L0604544-03
AUD 2
Sample Matrix: SOIL_VAPOR

Date Collected: 31-MAR-2006 12:30
Date Received : 31-MAR-2006
Date Reported : 14-APR-2006

Condition of Sample: Satisfactory

Field Prep: None

Number & Type of Containers: 1-Can

PARAMETER	RESULT	UNITS	RDL	REF METHOD	DATE PREP	DATE ANAL	ID
Volatile Organic Compounds in Air - ug/m3				48 TO-15		0413 17:34	PS
1,1,1-Trichloroethane	ND	ug/m3	2.72				
1,1,2,2-Tetrachloroethane	ND	ug/m3	3.43				
1,1,2-Trichloroethane	ND	ug/m3	2.72				
1,1-Dichloroethane	ND	ug/m3	2.02				
1,1-Dichloroethene	ND	ug/m3	1.98				
1,2,4-Trichlorobenzene	ND	ug/m3	3.71				
1,2,4-Trimethylbenzene	ND	ug/m3	2.46				
1,2-Dibromoethane	ND	ug/m3	3.84				
1,2-Dichlorobenzene	ND	ug/m3	3.00				
1,2-Dichloroethane	ND	ug/m3	2.02				
1,2-Dichloropropane	ND	ug/m3	2.31				
1,3,5-Trimethylbenzene	ND	ug/m3	2.46				
1,3-Butadiene	ND	ug/m3	1.10				
1,3-Dichlorobenzene	ND	ug/m3	3.00				
1,4-Dichlorobenzene	ND	ug/m3	3.00				
1,4-Dioxane	ND	ug/m3	3.60				
2,2,4-Trimethylpentane	ND	ug/m3	2.33				
2-Butanone	58.3	ug/m3	1.47				
2-Hexanone	ND	ug/m3	2.05				
3-Chloropropene	ND	ug/m3	1.56				
4-Ethyltoluene	ND	ug/m3	2.46				
Acetone	16.6	ug/m3	4.75				
Benzene	ND	ug/m3	1.60				
Benzyl chloride	ND	ug/m3	2.59				
Bromodichloromethane	ND	ug/m3	3.35				
Bromoform	ND	ug/m3	5.16				
Bromomethane	ND	ug/m3	1.94				
Carbon disulfide	ND	ug/m3	1.56				
Carbon tetrachloride	ND	ug/m3	3.14				
Chlorobenzene	ND	ug/m3	2.30				
Chloroethane	ND	ug/m3	1.32				
Chloroform	ND	ug/m3	2.44				
Chloromethane	ND	ug/m3	1.03				
cis-1,2-Dichloroethene	ND	ug/m3	1.98				
cis-1,3-Dichloropropene	ND	ug/m3	2.27				
Cyclohexane	ND	ug/m3	1.72				
Dibromochloromethane	ND	ug/m3	4.26				
Dichlorodifluoromethane	ND	ug/m3	4.94				

Comments: Complete list of References and Glossary of Terms found in Addendum I

ALPHA ANALYTICAL LABORATORIES
CERTIFICATE OF ANALYSIS

Laboratory Sample Number: L0604544-03
AUD 2

PARAMETER	RESULT	UNITS	RDL	REF METHOD	DATE PREP	DATE ANAL	ID
Volatile Organic Compounds in Air - ug/m3 cont'd				48 TO-15		0413 17:34	PS
Ethyl Alcohol	ND	ug/m3	3.76				
Ethyl Acetate	ND	ug/m3	1.80				
Ethylbenzene	3.32	ug/m3	2.17				
1,1,2-Trichloro-1,2,2-Trifluoroethane	ND	ug/m3	3.83				
1,2-Dichloro-1,1,2,2-tetrafluoroethane	ND	ug/m3	3.49				
Hexachlorobutadiene	ND	ug/m3	5.33				
iso-Propyl Alcohol	ND	ug/m3	1.23				
Methylene chloride	ND	ug/m3	3.47				
4-Methyl-2-pentanone	ND	ug/m3	2.05				
Methyl tert butyl ether	ND	ug/m3	1.80				
p/m-Xylene	11.2	ug/m3	4.34				
o-Xylene	4.44	ug/m3	2.17				
Heptane	ND	ug/m3	2.05				
n-Hexane	ND	ug/m3	3.52				
Propylene	ND	ug/m3	1.72				
Styrene	ND	ug/m3	2.13				
Tetrachloroethene	ND	ug/m3	3.39				
Tetrahydrofuran	ND	ug/m3	1.47				
Toluene	66.1	ug/m3	1.88				
trans-1,2-Dichloroethene	ND	ug/m3	1.98				
trans-1,3-Dichloropropene	ND	ug/m3	2.27				
Trichloroethene	ND	ug/m3	2.68				
Trichlorofluoromethane	ND	ug/m3	2.81				
Vinyl acetate	ND	ug/m3	1.76				
Vinyl bromide	ND	ug/m3	2.18				
Vinyl chloride	ND	ug/m3	1.28				
Volatile Organic Compounds in Air - ppbV				48 TO-15		0413 17:34	PS
1,1,1-Trichloroethane	ND	ppbV	0.500				
1,1,2,2-Tetrachloroethane	ND	ppbV	0.500				
1,1,2-Trichloroethane	ND	ppbV	0.500				
1,1-Dichloroethane	ND	ppbV	0.500				
1,1-Dichloroethene	ND	ppbV	0.500				
1,2,4-Trichlorobenzene	ND	ppbV	0.500				
1,2,4-Trimethylbenzene	ND	ppbV	0.500				
1,2-Dibromoethane	ND	ppbV	0.500				
1,2-Dichlorobenzene	ND	ppbV	0.500				
1,2-Dichloroethane	ND	ppbV	0.500				
1,2-Dichloropropane	ND	ppbV	0.500				
1,3,5-Trimethylbenzene	ND	ppbV	0.500				
1,3-Butadiene	ND	ppbV	0.500				
1,3-Dichlorobenzene	ND	ppbV	0.500				
1,4-Dichlorobenzene	ND	ppbV	0.500				
1,4-Dioxane	ND	ppbV	1.00				
2,2,4-Trimethylpentane	ND	ppbV	0.500				
2-Butanone	19.8	ppbV	0.500				
2-Hexanone	ND	ppbV	0.500				

Comments: Complete list of References and Glossary of Terms found in Addendum I

ALPHA ANALYTICAL LABORATORIES
CERTIFICATE OF ANALYSIS

Laboratory Sample Number: L0604544-03
AUD 2

PARAMETER	RESULT	UNITS	RDL	REF METHOD	DATE PREP	DATE ANAL	ID
Volatile Organic Compounds in Air - ppbV cont'd				48 TO-15		0413 17:34	PS
3-Chloropropene	ND	ppbV	0.500				
4-Ethyltoluene	ND	ppbV	0.500				
Acetone	7.02	ppbV	2.00				
Benzene	ND	ppbV	0.500				
Benzyl chloride	ND	ppbV	0.500				
Bromodichloromethane	ND	ppbV	0.500				
Bromoform	ND	ppbV	0.500				
Bromomethane	ND	ppbV	0.500				
Carbon disulfide	ND	ppbV	0.500				
Carbon tetrachloride	ND	ppbV	0.500				
Chlorobenzene	ND	ppbV	0.500				
Chloroethane	ND	ppbV	0.500				
Chloroform	ND	ppbV	0.500				
Chloromethane	ND	ppbV	0.500				
cis-1,2-Dichloroethene	ND	ppbV	0.500				
cis-1,3-Dichloropropene	ND	ppbV	0.500				
Cyclohexane	ND	ppbV	0.500				
Dibromochloromethane	ND	ppbV	0.500				
Dichlorodifluoromethane	ND	ppbV	1.00				
Ethyl Alcohol	ND	ppbV	2.00				
Ethyl Acetate	ND	ppbV	0.500				
Ethylbenzene	0.765	ppbV	0.500				
1,1,2-Trichloro-1,2,2-Trifluoroethane	ND	ppbV	0.500				
1,2-Dichloro-1,1,2,2-tetrafluoroethane	ND	ppbV	0.500				
Hexachlorobutadiene	ND	ppbV	0.500				
iso-Propyl Alcohol	ND	ppbV	0.500				
Methylene chloride	ND	ppbV	1.00				
4-Methyl-2-pentanone	ND	ppbV	0.500				
Methyl tert butyl ether	ND	ppbV	0.500				
p/m-Xylene	2.58	ppbV	1.00				
o-Xylene	1.02	ppbV	0.500				
Heptane	ND	ppbV	0.500				
n-Hexane	ND	ppbV	1.00				
Propylene	ND	ppbV	1.00				
Styrene	ND	ppbV	0.500				
Tetrachloroethene	ND	ppbV	0.500				
Tetrahydrofuran	ND	ppbV	0.500				
Toluene	17.6	ppbV	0.500				
trans-1,2-Dichloroethene	ND	ppbV	0.500				
trans-1,3-Dichloropropene	ND	ppbV	0.500				
Trichloroethene	ND	ppbV	0.500				
Trichlorofluoromethane	ND	ppbV	0.500				
Vinyl acetate	ND	ppbV	0.500				
Vinyl bromide	ND	ppbV	0.500				
Vinyl chloride	ND	ppbV	0.500				

Comments: Complete list of References and Glossary of Terms found in Addendum I

ALPHA ANALYTICAL LABORATORIES
CERTIFICATE OF ANALYSIS

MA:M-MA086 NH:200301-A CT:PH-0574 ME:MA086 RI:65 NY:11148 NJ:MA935 Army:USACE

Laboratory Sample Number: L0604544-04
BUILDING B2
Sample Matrix: SOIL_VAPOR

Date Collected: 31-MAR-2006 12:50
Date Received : 31-MAR-2006
Date Reported : 14-APR-2006

Condition of Sample: Satisfactory

Field Prep: None

Number & Type of Containers: 1-Can

PARAMETER	RESULT	UNITS	RDL	REF METHOD	DATE PREP	DATE ANAL	ID
Volatile Organic Compounds in Air - ug/m3				48 TO-15		0413 16:56	PS
1,1,1-Trichloroethane	ND	ug/m3	27.2				
1,1,2,2-Tetrachloroethane	ND	ug/m3	34.3				
1,1,2-Trichloroethane	ND	ug/m3	27.2				
1,1-Dichloroethane	ND	ug/m3	20.2				
1,1-Dichloroethene	ND	ug/m3	19.8				
1,2,4-Trichlorobenzene	ND	ug/m3	37.1				
1,2,4-Trimethylbenzene	ND	ug/m3	24.6				
1,2-Dibromoethane	ND	ug/m3	38.4				
1,2-Dichlorobenzene	ND	ug/m3	30.0				
1,2-Dichloroethane	ND	ug/m3	20.2				
1,2-Dichloropropane	ND	ug/m3	23.1				
1,3,5-Trimethylbenzene	ND	ug/m3	24.6				
1,3-Butadiene	ND	ug/m3	11.0				
1,3-Dichlorobenzene	ND	ug/m3	30.0				
1,4-Dichlorobenzene	ND	ug/m3	30.0				
1,4-Dioxane	ND	ug/m3	36.0				
2,2,4-Trimethylpentane	24.4	ug/m3	23.3				
2-Butanone	423	ug/m3	14.7				
2-Hexanone	ND	ug/m3	20.5				
3-Chloropropene	ND	ug/m3	15.6				
4-Ethyltoluene	ND	ug/m3	24.6				
Acetone	463	ug/m3	47.5				
Benzene	ND	ug/m3	16.0				
Benzyl chloride	ND	ug/m3	25.9				
Bromodichloromethane	ND	ug/m3	33.5				
Bromoform	ND	ug/m3	51.6				
Bromomethane	ND	ug/m3	19.4				
Carbon disulfide	ND	ug/m3	15.6				
Carbon tetrachloride	ND	ug/m3	31.4				
Chlorobenzene	ND	ug/m3	23.0				
Chloroethane	ND	ug/m3	13.2				
Chloroform	ND	ug/m3	24.4				
Chloromethane	ND	ug/m3	10.3				
cis-1,2-Dichloroethene	ND	ug/m3	19.8				
cis-1,3-Dichloropropene	ND	ug/m3	22.7				
Cyclohexane	ND	ug/m3	17.2				
Dibromochloromethane	ND	ug/m3	42.6				
Dichlorodifluoromethane	ND	ug/m3	49.4				

Comments: Complete list of References and Glossary of Terms found in Addendum I

ALPHA ANALYTICAL LABORATORIES
CERTIFICATE OF ANALYSIS

Laboratory Sample Number: L0604544-04
BUILDING B2

PARAMETER	RESULT	UNITS	RDL	REF METHOD	DATE PREP	DATE ANAL	ID
Volatile Organic Compounds in Air - ug/m3 cont'd				48 TO-15		0413 16:56	PS
Ethyl Alcohol	ND	ug/m3	37.6				
Ethyl Acetate	ND	ug/m3	18.0				
Ethylbenzene	ND	ug/m3	21.7				
1,1,2-Trichloro-1,2,2-Trifluoroethane	ND	ug/m3	38.3				
1,2-Dichloro-1,1,2,2-tetrafluoroethane	ND	ug/m3	34.9				
Hexachlorobutadiene	ND	ug/m3	53.3				
iso-Propyl Alcohol	ND	ug/m3	12.3				
Methylene chloride	ND	ug/m3	34.7				
4-Methyl-2-pentanone	ND	ug/m3	20.5				
Methyl tert butyl ether	ND	ug/m3	18.0				
p/m-Xylene	ND	ug/m3	43.4				
o-Xylene	ND	ug/m3	21.7				
Heptane	ND	ug/m3	20.5				
n-Hexane	ND	ug/m3	35.2				
Propylene	ND	ug/m3	17.2				
Styrene	ND	ug/m3	21.3				
Tetrachloroethene	ND	ug/m3	33.9				
Tetrahydrofuran	112	ug/m3	14.7				
Toluene	43.5	ug/m3	18.8				
trans-1,2-Dichloroethene	ND	ug/m3	19.8				
trans-1,3-Dichloropropene	ND	ug/m3	22.7				
Trichloroethene	ND	ug/m3	26.8				
Trichlorofluoromethane	ND	ug/m3	28.1				
Vinyl acetate	ND	ug/m3	17.6				
Vinyl bromide	ND	ug/m3	21.8				
Vinyl chloride	ND	ug/m3	12.8				
Volatile Organic Compounds in Air - ppbV				48 TO-15		0413 16:56	PS
1,1,1-Trichloroethane	ND	ppbV	5.00				
1,1,2,2-Tetrachloroethane	ND	ppbV	5.00				
1,1,2-Trichloroethane	ND	ppbV	5.00				
1,1-Dichloroethane	ND	ppbV	5.00				
1,1-Dichloroethene	ND	ppbV	5.00				
1,2,4-Trichlorobenzene	ND	ppbV	5.00				
1,2,4-Trimethylbenzene	ND	ppbV	5.00				
1,2-Dibromoethane	ND	ppbV	5.00				
1,2-Dichlorobenzene	ND	ppbV	5.00				
1,2-Dichloroethane	ND	ppbV	5.00				
1,2-Dichloropropane	ND	ppbV	5.00				
1,3,5-Trimethylbenzene	ND	ppbV	5.00				
1,3-Butadiene	ND	ppbV	5.00				
1,3-Dichlorobenzene	ND	ppbV	5.00				
1,4-Dichlorobenzene	ND	ppbV	5.00				
1,4-Dioxane	ND	ppbV	10.0				
2,2,4-Trimethylpentane	5.23	ppbV	5.00				
2-Butanone	144	ppbV	5.00				
2-Hexanone	ND	ppbV	5.00				

Comments: Complete list of References and Glossary of Terms found in Addendum I

ALPHA ANALYTICAL LABORATORIES
CERTIFICATE OF ANALYSIS

Laboratory Sample Number: L0604544-04
BUILDING B2

PARAMETER	RESULT	UNITS	RDL	REF METHOD	DATE PREP	DATE ANAL	ID
Volatile Organic Compounds in Air - ppbV cont'd				48 TO-15		0413 16:56	PS
3-Chloropropene	ND	ppbV	5.00				
4-Ethyltoluene	ND	ppbV	5.00				
Acetone	195	ppbV	20.0				
Benzene	ND	ppbV	5.00				
Benzyl chloride	ND	ppbV	5.00				
Bromodichloromethane	ND	ppbV	5.00				
Bromoform	ND	ppbV	5.00				
Bromomethane	ND	ppbV	5.00				
Carbon disulfide	ND	ppbV	5.00				
Carbon tetrachloride	ND	ppbV	5.00				
Chlorobenzene	ND	ppbV	5.00				
Chloroethane	ND	ppbV	5.00				
Chloroform	ND	ppbV	5.00				
Chloromethane	ND	ppbV	5.00				
cis-1,2-Dichloroethene	ND	ppbV	5.00				
cis-1,3-Dichloropropene	ND	ppbV	5.00				
Cyclohexane	ND	ppbV	5.00				
Dibromochloromethane	ND	ppbV	5.00				
Dichlorodifluoromethane	ND	ppbV	10.0				
Ethyl Alcohol	ND	ppbV	20.0				
Ethyl Acetate	ND	ppbV	5.00				
Ethylbenzene	ND	ppbV	5.00				
1,1,2-Trichloro-1,2,2-Trifluoroethane	ND	ppbV	5.00				
1,2-Dichloro-1,1,2,2-tetrafluoroethane	ND	ppbV	5.00				
Hexachlorobutadiene	ND	ppbV	5.00				
iso-Propyl Alcohol	ND	ppbV	5.00				
Methylene chloride	ND	ppbV	10.0				
4-Methyl-2-pentanone	ND	ppbV	5.00				
Methyl tert butyl ether	ND	ppbV	5.00				
p/m-Xylene	ND	ppbV	10.0				
o-Xylene	ND	ppbV	5.00				
Heptane	ND	ppbV	5.00				
n-Hexane	ND	ppbV	10.0				
Propylene	ND	ppbV	10.0				
Styrene	ND	ppbV	5.00				
Tetrachloroethene	ND	ppbV	5.00				
Tetrahydrofuran	38.0	ppbV	5.00				
Toluene	11.6	ppbV	5.00				
trans-1,2-Dichloroethene	ND	ppbV	5.00				
trans-1,3-Dichloropropene	ND	ppbV	5.00				
Trichloroethene	ND	ppbV	5.00				
Trichlorofluoromethane	ND	ppbV	5.00				
Vinyl acetate	ND	ppbV	5.00				
Vinyl bromide	ND	ppbV	5.00				
Vinyl chloride	ND	ppbV	5.00				

Comments: Complete list of References and Glossary of Terms found in Addendum I

ALPHA ANALYTICAL LABORATORIES
CERTIFICATE OF ANALYSIS

MA:M-MA086 NH:200301-A CT:PH-0574 ME:MA086 RI:65 NY:11148 NJ:MA935 Army:USACE

Laboratory Sample Number: L0604544-05
GYM 2
Sample Matrix: AIR CARTRI

Date Collected: 31-MAR-2006 11:14
Date Received : 31-MAR-2006
Date Reported : 14-APR-2006

Condition of Sample: Satisfactory

Field Prep: None

Number & Type of Containers: 1-PUF

PARAMETER	RESULT	UNITS	RDL	REF METHOD	DATE PREP	DATE ANAL	ID
Polycyclic Aromatic Hydrocarbons in Air				48 TO-13A	0407 15:45	0413 14:16	RL
Acenaphthene	ND	ug/cart	0.50				
Fluoranthene	ND	ug/cart	0.50				
Naphthalene	ND	ug/cart	0.50				
Benzo(a)anthracene	ND	ug/cart	0.50				
Benzo(a)pyrene	ND	ug/cart	0.50				
Benzo(b)fluoranthene	ND	ug/cart	0.50				
Benzo(k)fluoranthene	ND	ug/cart	0.50				
Chrysene	ND	ug/cart	0.50				
Acenaphthylene	ND	ug/cart	0.50				
Anthracene	ND	ug/cart	0.50				
Benzo(ghi)perylene	ND	ug/cart	0.50				
Fluorene	ND	ug/cart	0.50				
Phenanthrene	ND	ug/cart	0.50				
Dibenzo(a,h)anthracene	ND	ug/cart	0.50				
Indeno(1,2,3-cd)Pyrene	ND	ug/cart	0.50				
Pyrene	ND	ug/cart	0.50				
Perylene	ND	ug/cart	0.50				
Benzo(e)Pyrene	ND	ug/cart	0.50				
Surrogate(s)	Recovery		QC Criteria				
2-Fluorobiphenyl	95.0	%	60-120				
4-Terphenyl-d14	102	%	60-120				
Fluoranthene-d10	106	%	60-120				
Benzo(a)pyrene-d12	84.0	%	60-120				

Comments: Complete list of References and Glossary of Terms found in Addendum I

ALPHA ANALYTICAL LABORATORIES
CERTIFICATE OF ANALYSIS

MA:M-MA086 NH:200301-A CT:PH-0574 ME:MA086 RI:65 NY:11148 NJ:MA935 Army:USACE

Laboratory Sample Number: L0604544-06
GYM 3
Sample Matrix: AIR CARTRI

Date Collected: 31-MAR-2006 10:58
Date Received : 31-MAR-2006
Date Reported : 14-APR-2006

Condition of Sample: Satisfactory

Field Prep: None

Number & Type of Containers: 1-PUF

PARAMETER	RESULT	UNITS	RDL	REF METHOD	DATE PREP	DATE ANAL	ID
Polycyclic Aromatic Hydrocarbons in Air				48 TO-13A	0407 15:45	0413 15:04	RL
Acenaphthene	ND	ug/cart	0.50				
Fluoranthene	ND	ug/cart	0.50				
Naphthalene	ND	ug/cart	0.50				
Benzo(a)anthracene	ND	ug/cart	0.50				
Benzo(a)pyrene	ND	ug/cart	0.50				
Benzo(b)fluoranthene	ND	ug/cart	0.50				
Benzo(k)fluoranthene	ND	ug/cart	0.50				
Chrysene	ND	ug/cart	0.50				
Acenaphthylene	ND	ug/cart	0.50				
Anthracene	ND	ug/cart	0.50				
Benzo(ghi)perylene	ND	ug/cart	0.50				
Fluorene	ND	ug/cart	0.50				
Phenanthrene	ND	ug/cart	0.50				
Dibenzo(a,h)anthracene	ND	ug/cart	0.50				
Indeno(1,2,3-cd)Pyrene	ND	ug/cart	0.50				
Pyrene	ND	ug/cart	0.50				
Perylene	ND	ug/cart	0.50				
Benzo(e)Pyrene	ND	ug/cart	0.50				
Surrogate(s)	Recovery		QC Criteria				
2-Fluorobiphenyl	85.0	%	60-120				
4-Terphenyl-d14	98.0	%	60-120				
Fluoranthene-d10	90.0	%	60-120				
Benzo(a)pyrene-d12	63.0	%	60-120				

Comments: Complete list of References and Glossary of Terms found in Addendum I

ALPHA ANALYTICAL LABORATORIES
CERTIFICATE OF ANALYSIS

MA:M-MA086 NH:200301-A CT:PH-0574 ME:MA086 RI:65 NY:11148 NJ:MA935 Army:USACE

Laboratory Sample Number: L0604544-07
AUD 2
Sample Matrix: AIR CARTRI

Date Collected: 31-MAR-2006 14:10
Date Received : 31-MAR-2006
Date Reported : 14-APR-2006

Condition of Sample: Satisfactory

Field Prep: None

Number & Type of Containers: 1-PUF

PARAMETER	RESULT	UNITS	RDL	REF METHOD	DATE PREP	DATE ANAL	ID
Polycyclic Aromatic Hydrocarbons in Air				48 TO-13A	0407 15:45	0413 15:54	RL
Acenaphthene	ND	ug/cart	0.50				
Fluoranthene	ND	ug/cart	0.50				
Naphthalene	ND	ug/cart	0.50				
Benzo(a)anthracene	ND	ug/cart	0.50				
Benzo(a)pyrene	ND	ug/cart	0.50				
Benzo(b)fluoranthene	ND	ug/cart	0.50				
Benzo(k)fluoranthene	ND	ug/cart	0.50				
Chrysene	ND	ug/cart	0.50				
Acenaphthylene	ND	ug/cart	0.50				
Anthracene	ND	ug/cart	0.50				
Benzo(ghi)perylene	ND	ug/cart	0.50				
Fluorene	ND	ug/cart	0.50				
Phenanthrene	ND	ug/cart	0.50				
Dibenzo(a,h)anthracene	ND	ug/cart	0.50				
Indeno(1,2,3-cd)Pyrene	ND	ug/cart	0.50				
Pyrene	ND	ug/cart	0.50				
Perylene	ND	ug/cart	0.50				
Benzo(e)Pyrene	ND	ug/cart	0.50				
Surrogate(s)	Recovery		QC Criteria				
2-Fluorobiphenyl	89.0	%	60-120				
4-Terphenyl-d14	105	%	60-120				
Fluoranthene-d10	95.0	%	60-120				
Benzo(a)pyrene-d12	87.0	%	60-120				

Comments: Complete list of References and Glossary of Terms found in Addendum I

ALPHA ANALYTICAL LABORATORIES
CERTIFICATE OF ANALYSIS

MA:M-MA086 NH:200301-A CT:PH-0574 ME:MA086 RI:65 NY:11148 NJ:MA935 Army:USACE

Laboratory Sample Number: L0604544-08
BUILDING B 2
Sample Matrix: AIR CARTRI

Date Collected: 31-MAR-2006 15:07
Date Received : 31-MAR-2006
Date Reported : 14-APR-2006

Condition of Sample: Satisfactory

Field Prep: None

Number & Type of Containers: 1-PUF

PARAMETER	RESULT	UNITS	RDL	REF METHOD	DATE PREP	DATE ANAL	ID
Polycyclic Aromatic Hydrocarbons in Air				48 TO-13A	0407 15:45	0413 16:37	RL
Acenaphthene	ND	ug/cart	0.50				
Fluoranthene	ND	ug/cart	0.50				
Naphthalene	ND	ug/cart	0.50				
Benzo(a)anthracene	ND	ug/cart	0.50				
Benzo(a)pyrene	ND	ug/cart	0.50				
Benzo(b)fluoranthene	ND	ug/cart	0.50				
Benzo(k)fluoranthene	ND	ug/cart	0.50				
Chrysene	ND	ug/cart	0.50				
Acenaphthylene	ND	ug/cart	0.50				
Anthracene	ND	ug/cart	0.50				
Benzo(ghi)perylene	ND	ug/cart	0.50				
Fluorene	ND	ug/cart	0.50				
Phenanthrene	ND	ug/cart	0.50				
Dibenzo(a,h)anthracene	ND	ug/cart	0.50				
Indeno(1,2,3-cd)Pyrene	ND	ug/cart	0.50				
Pyrene	ND	ug/cart	0.50				
Perylene	ND	ug/cart	0.50				
Benzo(e)Pyrene	ND	ug/cart	0.50				
Surrogate(s)	Recovery		QC Criteria				
2-Fluorobiphenyl	90.0	%	60-120				
4-Terphenyl-d14	98.0	%	60-120				
Fluoranthene-d10	88.0	%	60-120				
Benzo(a)pyrene-d12	74.0	%	60-120				

Comments: Complete list of References and Glossary of Terms found in Addendum I

ALPHA ANALYTICAL LABORATORIES
CERTIFICATE OF ANALYSIS

MA:M-MA086 NH:200301-A CT:PH-0574 ME:MA086 RI:65 NY:11148 NJ:MA935 Army:USACE

Laboratory Sample Number: L0604544-09
UNUSED CANISTER 1
Sample Matrix: SOIL_VAPOR

Date Collected: 31-MAR-2006 00:00
Date Received : 31-MAR-2006
Date Reported : 14-APR-2006

Condition of Sample: Satisfactory

Field Prep: None

Number & Type of Containers: 1-Can

PARAMETER	RESULT	UNITS	RDL	REF METHOD	DATE PREP	DATE ANAL	ID

Comments: Complete list of References and Glossary of Terms found in Addendum I

ALPHA ANALYTICAL LABORATORIES
CERTIFICATE OF ANALYSIS

MA:M-MA086 NH:200301-A CT:PH-0574 ME:MA086 RI:65 NY:11148 NJ:MA935 Army:USACE

Laboratory Sample Number: L0604544-10
UNUSED CANISTER 2
Sample Matrix: SOIL_VAPOR

Date Collected: 31-MAR-2006 00:00
Date Received : 31-MAR-2006
Date Reported : 14-APR-2006

Condition of Sample: Satisfactory

Field Prep: None

Number & Type of Containers: 1-Can

PARAMETER	RESULT	UNITS	RDL	REF METHOD	DATE PREP	DATE ANAL	ID

Comments: Complete list of References and Glossary of Terms found in Addendum I

ALPHA ANALYTICAL LABORATORIES
CERTIFICATE OF ANALYSIS

MA:M-MA086 NH:200301-A CT:PH-0574 ME:MA086 RI:65 NY:11148 NJ:MA935 Army:USACE

Laboratory Sample Number: L0604544-11
UNUSED CANISTER 3
Sample Matrix: SOIL_VAPOR

Date Collected: 31-MAR-2006 00:00
Date Received : 31-MAR-2006
Date Reported : 14-APR-2006

Condition of Sample: Satisfactory

Field Prep: None

Number & Type of Containers: 1-Can

PARAMETER	RESULT	UNITS	RDL	REF METHOD	DATE PREP	DATE ANAL	ID

Comments: Complete list of References and Glossary of Terms found in Addendum I

ALPHA ANALYTICAL LABORATORIES
CERTIFICATE OF ANALYSIS

MA:M-MA086 NH:200301-A CT:PH-0574 ME:MA086 RI:65 NY:11148 NJ:MA935 Army:USACE

Laboratory Sample Number: L0604544-12
UNUSED PUFS
Sample Matrix: AIR CARTRI

Date Collected: 31-MAR-2006 00:00
Date Received : 31-MAR-2006
Date Reported : 14-APR-2006

Condition of Sample: Satisfactory

Field Prep: None

Number & Type of Containers: 1-PUF

PARAMETER	RESULT	UNITS	RDL	REF METHOD	DATE PREP	DATE ANAL	ID

Comments: Complete list of References and Glossary of Terms found in Addendum I

ALPHA ANALYTICAL LABORATORIES
CERTIFICATE OF ANALYSIS

MA:M-MA086 NH:200301-A CT:PH-0574 ME:MA086 RI:65 NY:11148 NJ:MA935 Army:USACE

Laboratory Sample Number: L0604544-13
UNUSED PUFS
Sample Matrix: AIR CARTRI

Date Collected: 31-MAR-2006 00:00
Date Received : 31-MAR-2006
Date Reported : 14-APR-2006

Condition of Sample: Satisfactory

Field Prep: None

Number & Type of Containers: 1-PUF

PARAMETER	RESULT	UNITS	RDL	REF METHOD	DATE PREP	DATE ANAL	ID

Comments: Complete list of References and Glossary of Terms found in Addendum I

ALPHA ANALYTICAL LABORATORIES
CERTIFICATE OF ANALYSIS

MA:M-MA086 NH:200301-A CT:PH-0574 ME:MA086 RI:65 NY:11148 NJ:MA935 Army:USACE

Laboratory Sample Number: L0604544-14
UNUSED PUFS
Sample Matrix: AIR CARTRI

Date Collected: 31-MAR-2006 00:00
Date Received : 31-MAR-2006
Date Reported : 14-APR-2006

Condition of Sample: Satisfactory

Field Prep: None

Number & Type of Containers: 1-PUF

PARAMETER	RESULT	UNITS	RDL	REF METHOD	DATE PREP	DATE ANAL	ID

Comments: Complete list of References and Glossary of Terms found in Addendum I

ALPHA ANALYTICAL LABORATORIES
QUALITY ASSURANCE BATCH DUPLICATE ANALYSIS

Laboratory Job Number: L0604544

Parameter	Value 1	Value 2	Units	RPD	RPD Limits
Volatile Organic Compounds in Air for sample(s) 01-04 (L0604478-10, WG235470-2)					
1,1,1-Trichloroethane	33.2	32.4	ug/m3	2	25
1,1,2,2-Tetrachloroethane	ND	ND	ug/m3	NC	25
1,1,2-Trichloroethane	ND	ND	ug/m3	NC	25
1,1-Dichloroethane	ND	ND	ug/m3	NC	25
1,1-Dichloroethene	ND	ND	ug/m3	NC	25
1,2,4-Trichlorobenzene	ND	ND	ug/m3	NC	25
1,2,4-Trimethylbenzene	ND	ND	ug/m3	NC	25
1,2-Dibromoethane	ND	ND	ug/m3	NC	25
1,2-Dichlorobenzene	ND	ND	ug/m3	NC	25
1,2-Dichloroethane	ND	ND	ug/m3	NC	25
1,2-Dichloropropane	ND	ND	ug/m3	NC	25
1,3,5-Trimethylbenzene	ND	ND	ug/m3	NC	25
1,3-Butadiene	7.14	8.05	ug/m3	12	25
1,3-Dichlorobenzene	ND	ND	ug/m3	NC	25
1,4-Dichlorobenzene	ND	ND	ug/m3	NC	25
1,4-Dioxane	ND	ND	ug/m3	NC	25
2,2,4-Trimethylpentane	ND	ND	ug/m3	NC	25
2-Butanone	ND	ND	ug/m3	NC	25
2-Hexanone	ND	ND	ug/m3	NC	25
3-Chloropropene	ND	ND	ug/m3	NC	25
4-Ethyltoluene	ND	ND	ug/m3	NC	25
Acetone	33.1	33.6	ug/m3	1	25
Benzene	4.85	4.48	ug/m3	8	25
Benzyl chloride	ND	ND	ug/m3	NC	25
Bromodichloromethane	ND	ND	ug/m3	NC	25
Bromoform	ND	ND	ug/m3	NC	25
Bromomethane	ND	ND	ug/m3	NC	25
Carbon disulfide	ND	ND	ug/m3	NC	25
Carbon tetrachloride	ND	ND	ug/m3	NC	25
Chlorobenzene	ND	ND	ug/m3	NC	25
Chloroethane	ND	ND	ug/m3	NC	25
Chloroform	ND	ND	ug/m3	NC	25
Chloromethane	ND	ND	ug/m3	NC	25
cis-1,2-Dichloroethene	ND	ND	ug/m3	NC	25
cis-1,3-Dichloropropene	ND	ND	ug/m3	NC	25
Cyclohexane	ND	ND	ug/m3	NC	25
Dibromochloromethane	ND	ND	ug/m3	NC	25
Dichlorodifluoromethane	ND	ND	ug/m3	NC	25
Ethyl Alcohol	ND	ND	ug/m3	NC	25
Ethyl Acetate	ND	ND	ug/m3	NC	25
Ethylbenzene	ND	ND	ug/m3	NC	25
1,1,2-Trichloro-1,2,2-Trifluoroethane	ND	ND	ug/m3	NC	25
1,2-Dichloro-1,1,2,2-tetrafluoroethane	ND	ND	ug/m3	NC	25
Hexachlorobutadiene	ND	ND	ug/m3	NC	25
iso-Propyl Alcohol	ND	ND	ug/m3	NC	25
Methylene chloride	ND	ND	ug/m3	NC	25

ALPHA ANALYTICAL LABORATORIES
QUALITY ASSURANCE BATCH DUPLICATE ANALYSIS

Laboratory Job Number: L0604544

Continued

Parameter	Value 1	Value 2	Units	RPD	RPD Limits
Volatile Organic Compounds in Air for sample(s) 01-04 (L0604478-10, WG235470-2)					
4-Methyl-2-pentanone	ND	ND	ug/m3	NC	25
Methyl tert butyl ether	ND	ND	ug/m3	NC	25
p/m-Xylene	ND	ND	ug/m3	NC	25
o-Xylene	ND	ND	ug/m3	NC	25
Heptane	ND	ND	ug/m3	NC	25
n-Hexane	ND	ND	ug/m3	NC	25
Propylene	29.9	32.2	ug/m3	7	25
Styrene	ND	ND	ug/m3	NC	25
Tetrachloroethene	6.87	6.72	ug/m3	2	25
Tetrahydrofuran	ND	ND	ug/m3	NC	25
Toluene	4.69	5.03	ug/m3	7	25
trans-1,2-Dichloroethene	ND	ND	ug/m3	NC	25
trans-1,3-Dichloropropene	ND	ND	ug/m3	NC	25
Trichloroethene	ND	ND	ug/m3	NC	25
Trichlorofluoromethane	ND	ND	ug/m3	NC	25
Vinyl acetate	ND	ND	ug/m3	NC	25
Vinyl bromide	ND	ND	ug/m3	NC	25
Vinyl chloride	ND	ND	ug/m3	NC	25

ALPHA ANALYTICAL LABORATORIES
QUALITY ASSURANCE BATCH SPIKE ANALYSES

Laboratory Job Number: L0604544

Parameter	% Recovery	QC Criteria
Volatile Organic Compounds in Air LCS for sample(s) 01-04 (WG235470-4)		
1,1,1-Trichloroethane	76	70-130
1,1,2,2-Tetrachloroethane	151	70-130
1,1,2-Trichloroethane	107	70-130
1,1-Dichloroethane	72	70-130
1,1-Dichloroethene	81	70-130
1,2,4-Trichlorobenzene	86	70-130
1,2,4-Trimethylbenzene	121	70-130
1,2-Dibromoethane	121	70-130
1,2-Dichlorobenzene	107	70-130
1,2-Dichloroethane	83	70-130
1,2-Dichloropropane	108	70-130
1,3,5-Trimethylbenzene	117	70-130
1,3-Butadiene	90	70-130
1,3-Dichlorobenzene	122	70-130
1,4-Dichlorobenzene	118	70-130
1,4-Dioxane	93	70-130
2,2,4-Trimethylpentane	92	70-130
2-Butanone	71	70-130
2-Hexanone	98	70-130
3-Chloropropene	59	70-130
4-Ethyltoluene	116	70-130
Acetone	77	70-130
Benzene	99	70-130
Benzyl chloride	106	70-130
Bromodichloromethane	88	70-130
Bromoform	111	70-130
Bromomethane	97	70-130
Carbon disulfide	110	70-130
Carbon tetrachloride	76	70-130
Chlorobenzene	126	70-130
Chloroethane	93	70-130
Chloroform	108	70-130
Chloromethane	95	70-130
cis-1,2-Dichloroethene	86	70-130
cis-1,3-Dichloropropene	86	70-130
Cyclohexane	88	70-130
Dibromochloromethane	118	70-130
Dichlorodifluoromethane	90	70-130
Ethyl Alcohol	70	70-130
Ethyl Acetate	98	70-130
Ethylbenzene	125	70-130
1,1,2-Trichloro-1,2,2-Trifluoroethane	90	70-130
1,2-Dichloro-1,1,2,2-tetrafluoroethane	91	70-130
Hexachlorobutadiene	98	70-130
iso-Propyl Alcohol	70	70-130
Methylene chloride	92	70-130
4-Methyl-2-pentanone	81	70-130
Methyl tert butyl ether	77	70-130

ALPHA ANALYTICAL LABORATORIES
QUALITY ASSURANCE BATCH SPIKE ANALYSES

Laboratory Job Number: L0604544

Continued

Parameter	% Recovery	QC Criteria
Volatile Organic Compounds in Air LCS for sample(s) 01-04 (WG235470-4)		
p/m-Xylene	128	70-130
o-Xylene	128	70-130
Heptane	76	70-130
n-Hexane	96	70-130
Propylene	89	70-130
Styrene	111	70-130
Tetrachloroethene	105	70-130
Tetrahydrofuran	89	70-130
Toluene	128	70-130
trans-1,2-Dichloroethene	74	70-130
trans-1,3-Dichloropropene	64	70-130
Trichloroethene	87	70-130
Trichlorofluoromethane	82	70-130
Vinyl acetate	51	70-130
Vinyl bromide	108	70-130
Vinyl chloride	92	70-130
Polycyclic Aromatic Hydrocarbons in Air LCS for sample(s) 05-08 (WG235318-2)		
Acenaphthene	69	60-120
Fluoranthene	88	60-120
Naphthalene	76	60-120
Benzo(a)anthracene	79	60-120
Benzo(a)pyrene	77	60-120
Benzo(b)fluoranthene	100	60-120
Benzo(k)fluoranthene	84	60-120
Chrysene	74	60-120
Acenaphthylene	67	60-120
Anthracene	64	60-120
Benzo(ghi)perylene	81	60-120
Fluorene	86	60-120
Phenanthrene	71	60-120
Dibenzo(a,h)anthracene	79	60-120
Indeno(1,2,3-cd)Pyrene	81	60-120
Pyrene	72	60-120
Perylene	83	60-120
Benzo(e)Pyrene	79	60-120
Surrogate(s)		
2-Fluorobiphenyl	84	60-120
4-Terphenyl-d14	83	60-120
Fluoranthene-d10	96	60-120
Benzo(a)pyrene-d12	91	60-120

ALPHA ANALYTICAL LABORATORIES
QUALITY ASSURANCE BATCH BLANK ANALYSIS

Laboratory Job Number: L0604544

PARAMETER	RESULT	UNITS	RDL	REF METHOD	DATE PREP	DATE ANAL	ID
Blank Analysis for sample(s) 01-04 (WG235470-5)							
Volatile Organic Compounds in Air - ug/m3				48 TO-15		0412 23:42	PS
1,1,1-Trichloroethane	ND	ug/m3	2.72				
1,1,2,2-Tetrachloroethane	ND	ug/m3	3.43				
1,1,2-Trichloroethane	ND	ug/m3	2.72				
1,1-Dichloroethane	ND	ug/m3	2.02				
1,1-Dichloroethene	ND	ug/m3	1.98				
1,2,4-Trichlorobenzene	ND	ug/m3	3.71				
1,2,4-Trimethylbenzene	ND	ug/m3	2.46				
1,2-Dibromoethane	ND	ug/m3	3.84				
1,2-Dichlorobenzene	ND	ug/m3	3.00				
1,2-Dichloroethane	ND	ug/m3	2.02				
1,2-Dichloropropane	ND	ug/m3	2.31				
1,3,5-Trimethylbenzene	ND	ug/m3	2.46				
1,3-Butadiene	ND	ug/m3	1.10				
1,3-Dichlorobenzene	ND	ug/m3	3.00				
1,4-Dichlorobenzene	ND	ug/m3	3.00				
1,4-Dioxane	ND	ug/m3	3.60				
2,2,4-Trimethylpentane	ND	ug/m3	2.33				
2-Butanone	ND	ug/m3	1.47				
2-Hexanone	ND	ug/m3	2.05				
3-Chloropropene	ND	ug/m3	1.56				
4-Ethyltoluene	ND	ug/m3	2.46				
Acetone	ND	ug/m3	4.75				
Benzene	ND	ug/m3	1.60				
Benzyl chloride	ND	ug/m3	2.59				
Bromodichloromethane	ND	ug/m3	3.35				
Bromoform	ND	ug/m3	5.16				
Bromomethane	ND	ug/m3	1.94				
Carbon disulfide	ND	ug/m3	1.56				
Carbon tetrachloride	ND	ug/m3	3.14				
Chlorobenzene	ND	ug/m3	2.30				
Chloroethane	ND	ug/m3	1.32				
Chloroform	ND	ug/m3	2.44				
Chloromethane	ND	ug/m3	1.03				
cis-1,2-Dichloroethene	ND	ug/m3	1.98				
cis-1,3-Dichloropropene	ND	ug/m3	2.27				
Cyclohexane	ND	ug/m3	1.72				
Dibromochloromethane	ND	ug/m3	4.26				
Dichlorodifluoromethane	ND	ug/m3	4.94				
Ethyl Alcohol	ND	ug/m3	3.76				
Ethyl Acetate	ND	ug/m3	1.80				
Ethylbenzene	ND	ug/m3	2.17				
1,1,2-Trichloro-1,2,2-Trifluoroethane	ND	ug/m3	3.83				
1,2-Dichloro-1,1,2,2-tetrafluoroethane	ND	ug/m3	3.49				
Hexachlorobutadiene	ND	ug/m3	5.33				

ALPHA ANALYTICAL LABORATORIES
QUALITY ASSURANCE BATCH BLANK ANALYSIS

Laboratory Job Number: L0604544

Continued

PARAMETER	RESULT	UNITS	RDL	REF METHOD	DATE PREP	DATE ANAL	ID
Blank Analysis for sample(s) 01-04 (WG235470-5)							
Volatile Organic Compounds in Air - ug/m3 cont'd				48 TO-15		0412 23:42	PS
iso-Propyl Alcohol	ND	ug/m3	1.23				
Methylene chloride	ND	ug/m3	3.47				
4-Methyl-2-pentanone	ND	ug/m3	2.05				
Methyl tert butyl ether	ND	ug/m3	1.80				
p/m-Xylene	ND	ug/m3	4.34				
o-Xylene	ND	ug/m3	2.17				
Heptane	ND	ug/m3	2.05				
n-Hexane	ND	ug/m3	3.52				
Propylene	ND	ug/m3	1.72				
Styrene	ND	ug/m3	2.13				
Tetrachloroethene	ND	ug/m3	3.39				
Tetrahydrofuran	ND	ug/m3	1.47				
Toluene	ND	ug/m3	1.88				
trans-1,2-Dichloroethene	ND	ug/m3	1.98				
trans-1,3-Dichloropropene	ND	ug/m3	2.27				
Trichloroethene	ND	ug/m3	2.68				
Trichlorofluoromethane	ND	ug/m3	2.81				
Vinyl acetate	ND	ug/m3	1.76				
Vinyl bromide	ND	ug/m3	2.18				
Vinyl chloride	ND	ug/m3	1.28				
Blank Analysis for sample(s) 01-04 (WG235470-5)							
- ppbV				48 TO-15		0412 23:42	PS
1,1,1-Trichloroethane	ND	ppbV	0.500				
1,1,2,2-Tetrachloroethane	ND	ppbV	0.500				
1,1,2-Trichloroethane	ND	ppbV	0.500				
1,1-Dichloroethane	ND	ppbV	0.500				
1,1-Dichloroethene	ND	ppbV	0.500				
1,2,4-Trichlorobenzene	ND	ppbV	0.500				
1,2,4-Trimethylbenzene	ND	ppbV	0.500				
1,2-Dibromoethane	ND	ppbV	0.500				
1,2-Dichlorobenzene	ND	ppbV	0.500				
1,2-Dichloroethane	ND	ppbV	0.500				
1,2-Dichloropropane	ND	ppbV	0.500				
1,3,5-Trimethylbenzene	ND	ppbV	0.500				
1,3-Butadiene	ND	ppbV	0.500				
1,3-Dichlorobenzene	ND	ppbV	0.500				
1,4-Dichlorobenzene	ND	ppbV	0.500				
1,4-Dioxane	ND	ppbV	1.00				
2,2,4-Trimethylpentane	ND	ppbV	0.500				
2-Butanone	ND	ppbV	0.500				
2-Hexanone	ND	ppbV	0.500				
3-Chloropropene	ND	ppbV	0.500				
4-Ethyltoluene	ND	ppbV	0.500				
Acetone	ND	ppbV	2.00				
Benzene	ND	ppbV	0.500				

ALPHA ANALYTICAL LABORATORIES
QUALITY ASSURANCE BATCH BLANK ANALYSIS

Laboratory Job Number: L0604544

Continued

PARAMETER	RESULT	UNITS	RDL	REF METHOD	DATE PREP	DATE ANAL	ID
Blank Analysis for sample(s) 01-04 (WG235470-5)							
- ppbV cont'd				48 TO-15		0412 23:42	PS
Benzyl chloride	ND	ppbV	0.500				
Bromodichloromethane	ND	ppbV	0.500				
Bromoform	ND	ppbV	0.500				
Bromomethane	ND	ppbV	0.500				
Carbon disulfide	ND	ppbV	0.500				
Carbon tetrachloride	ND	ppbV	0.500				
Chlorobenzene	ND	ppbV	0.500				
Chloroethane	ND	ppbV	0.500				
Chloroform	ND	ppbV	0.500				
Chloromethane	ND	ppbV	0.500				
cis-1,2-Dichloroethene	ND	ppbV	0.500				
cis-1,3-Dichloropropene	ND	ppbV	0.500				
Cyclohexane	ND	ppbV	0.500				
Dibromochloromethane	ND	ppbV	0.500				
Dichlorodifluoromethane	ND	ppbV	1.00				
Ethyl Alcohol	ND	ppbV	2.00				
Ethyl Acetate	ND	ppbV	0.500				
Ethylbenzene	ND	ppbV	0.500				
1,1,2-Trichloro-1,2,2-Trifluoroethane	ND	ppbV	0.500				
1,2-Dichloro-1,1,2,2-tetrafluoroethane	ND	ppbV	0.500				
Hexachlorobutadiene	ND	ppbV	0.500				
iso-Propyl Alcohol	ND	ppbV	0.500				
Methylene chloride	ND	ppbV	1.00				
4-Methyl-2-pentanone	ND	ppbV	0.500				
Methyl tert butyl ether	ND	ppbV	0.500				
p/m-Xylene	ND	ppbV	1.00				
o-Xylene	ND	ppbV	0.500				
Heptane	ND	ppbV	0.500				
n-Hexane	ND	ppbV	1.00				
Propylene	ND	ppbV	1.00				
Styrene	ND	ppbV	0.500				
Tetrachloroethene	ND	ppbV	0.500				
Tetrahydrofuran	ND	ppbV	0.500				
Toluene	ND	ppbV	0.500				
trans-1,2-Dichloroethene	ND	ppbV	0.500				
trans-1,3-Dichloropropene	ND	ppbV	0.500				
Trichloroethene	ND	ppbV	0.500				
Trichlorofluoromethane	ND	ppbV	0.500				
Vinyl acetate	ND	ppbV	0.500				
Vinyl bromide	ND	ppbV	0.500				
Vinyl chloride	ND	ppbV	0.500				
Blank Analysis for sample(s) 05-08 (WG235318-1)							
Polycyclic Aromatic Hydrocarbons in Air				48 TO-13A	0407 15:45	0413 12:39	RL

ALPHA ANALYTICAL LABORATORIES
QUALITY ASSURANCE BATCH BLANK ANALYSIS

Laboratory Job Number: L0604544

Continued

PARAMETER	RESULT	UNITS	RDL	REF METHOD	DATE PREP	DATE ANAL	ID
Blank Analysis for sample(s) 05-08 (WG235318-1)							
Polycyclic Aromatic Hydrocarbons in Air cont'd				48 TO-13A	0407 15:45	0413 12:39	RL
Acenaphthene	ND	ug/cart	0.50				
Fluoranthene	ND	ug/cart	0.50				
Naphthalene	ND	ug/cart	0.50				
Benzo(a)anthracene	ND	ug/cart	0.50				
Benzo(a)pyrene	ND	ug/cart	0.50				
Benzo(b)fluoranthene	ND	ug/cart	0.50				
Benzo(k)fluoranthene	ND	ug/cart	0.50				
Chrysene	ND	ug/cart	0.50				
Acenaphthylene	ND	ug/cart	0.50				
Anthracene	ND	ug/cart	0.50				
Benzo(ghi)perylene	ND	ug/cart	0.50				
Fluorene	ND	ug/cart	0.50				
Phenanthrene	ND	ug/cart	0.50				
Dibenzo(a,h)anthracene	ND	ug/cart	0.50				
Indeno(1,2,3-cd)Pyrene	ND	ug/cart	0.50				
Pyrene	ND	ug/cart	0.50				
Perylene	ND	ug/cart	0.50				
Benzo(e)Pyrene	ND	ug/cart	0.50				
Surrogate(s)	Recovery		QC Criteria				
2-Fluorobiphenyl	80.0	%	60-120				
4-Terphenyl-d14	97.0	%	60-120				
Fluoranthene-d10	93.0	%	60-120				
Benzo(a)pyrene-d12	66.0	%	60-120				

REFERENCES

48. Compendium of Methods for the Determination of Toxic Organic Compounds in Ambient Air. Second Edition. EPA/625/R-96/010b, January 1999.

GLOSSARY OF TERMS AND SYMBOLS

REF	Reference number in which test method may be found.
METHOD	Method number by which analysis was performed.
ID	Initials of the analyst.
ND	Not detected in comparison to the reported detection limit.
NI	Not Ignitable.
ug/cart	Micrograms per Cartridge.

LIMITATION OF LIABILITIES

Alpha Analytical, Inc. performs services with reasonable care and diligence normal to the analytical testing laboratory industry. In the event of an error, the sole and exclusive responsibility of Alpha Analytical, Inc., shall be to re-perform the work at it's own expense. In no event shall Alpha Analytical, Inc. be held liable for any incidental consequential or special damages, including but not limited to, damages in any way connected with the use of, interpretation of, information or analysis provided by Alpha Analytical, Inc.

We strongly urge our clients to comply with EPA protocol regarding sample volume, preservation, cooling, containers, sampling procedures, holding times and splitting of samples in the field.

AIR ANALYSIS

PAGE 1 OF

CHAIN OF CUSTODY

Eight Walkup Drive Westborough, MA 01581
TEL: 508-898-9220 FAX: 508-898-9193

Date Rec'd in Lab: 3/31/06

ALPHA Job #: L0604544

Client Information

Client: BETA Group, Inc.
Address: 315 Norwood Park South
Norwood MA 02062
Phone: 781-255-1982
Fax: 781-255 1974
Email: fdowney@beta-inc.com

☐ These samples have been previously analyzed by Alpha

Project Information

Project Name: McCoy Field
Project Location: New Bedford, MA
Project #: 02685
Project Manager: Dave Billo
ALPHA Quote #:

Turn-Around Time

☑ Standard ☐ RUSH (only confirmed if pre-approved!)
5 DAYS
TO-13: 10 DAYS
Date Due: ~~4/10/06~~ 4/14/06 (GK) Time:

Report Information - Data Deliverables

☐ FAX
☑ ADEx
Criteria Checker:
(Default based on Regulatory Criteria Indicated)
Other Formats:
☑ EMAIL (standard pdf report)
☐ Additional Deliverables:
Report to: (if different than Project Manager)

Billing Information

☐ Same as Client info PO #:

Regulatory Requirements/Report Limits

State /Fed	Program	Criteria

Other Project Specific Requirements/Comments:

ALPHA Lab ID (Lab Use Only)	Sample ID	Collection Date	Collection Start Time	Collection End Time	Sample Matrix	Sampler's Initials	ID Can	ID - Flow Controller	TO-14A	TO-15	APH	DISSOLVED GASES	FIXED GASES	TO-13A	TO-15 SULFIDES/MERCAPTANS	DISS GASES CO2 ONLY	TO-13	TO-4	Sample Comments	TOTAL # CONTINERS
L0604544-01	Gym B2	3/30/06	0950	1404	SV	TMD	0245			X										1
02	Gym B3	3/30/06	0950	1404			0113			X										1
03	Aud 2	3/31/06	0507	1230			0146			X										1
04	Building B2	3/31/06	0850	1250			0116			X										1
05	Gym B2		1014	1114													X	X	0.5 LPM	2
06	Gym B3		1006	1058													X	X		2
07	Aud 2		1247	1410													X	X		2
08	Building B2		1255	1507													X	X		2
								Container Type		CS							✓	✓		

Shaded Gray Areas For Lab Use Only

Relinquished By:	Date/Time	Received By:	Date/Time
[illegible]	3/31/06 1530	[illegible]	3/31/06 1530
[illegible]	3/31/06 1630	[illegible]	3/31/06 1630
[illegible]	3/31/06 1800	[illegible]	3/31/06 1800

Please print clearly, legibly and completely. Samples can not be logged in and turnaround time clock will not start until any ambiguities are resolved. All samples submitted are subject to Alpha's Payment Terms. See reverse side.

Form No: 01-03 (rev. 8-JUN-05)

ALPHA ANALYTICAL LABORATORIES

Eight Walkup Drive
Westborough, Massachusetts 01581-1019
(508) 898-9220 www.alphalab.com

MA:M-MA086 NH:200301-A CT:PH-0574 ME:MA086 RI:65 NY:11148 NJ:MA935 Army:USACE

CERTIFICATE OF ANALYSIS

Client: Beta Engineering, Inc.

Address: 315 Norwood Park South

Norwood, MA 02062

Attn: Mr. Tim Downey

Project Number: 02685

Site: MCCOY FIELD

Laboratory Job Number: L0605827

Date Received: 28-APR-2006

Date Reported: 09-MAY-2006

Delivery Method: Alpha

ALPHA SAMPLE NUMBER	CLIENT IDENTIFICATION	SAMPLE LOCATION
L0605827-01	GYM-2	NEW BEDFORD, MA
L0605827-02	GYM-2A	NEW BEDFORD, MA
L0605827-03	GYM-3A	NEW BEDFORD, MA
L0605827-04	AUD-2A	NEW BEDFORD, MA
L0605827-05	FIELD BLANK	NEW BEDFORD, MA

I, the undersigned, attest under the pains and penalties of perjury that, based upon my personal inquiry of those responsible for obtaining the information, the material contained in this report is, to the best of my knowledge and belief, accurate and complete. This certificate of analysis is not complete unless this page accompanies any and all pages of this report.

Authorized by: Douglas Sheehy
Technical Director

ALPHA ANALYTICAL LABORATORIES
NARRATIVE REPORT

Laboratory Job Number: L0605827

The samples were received in accordance with the chain of custody and no significant deviations were encountered during preparation or analysis unless otherwise noted below.

TO15

Organic Compounds in Air

In order to comply with various regulatory requirements, the results for the analysis of Organic Compounds in Air by EPA TO-14A or TO-15 are provided in ug/m3 as well as ppbv for each sample in a sequential format.

L0605827-01 has elevated limits of detection due to the 10x dilutions required by the elevated concentrations of non-target compounds in the sample.

The WG238596-1 LCS has high recoveries for vinyl acetate, 1,2-dichloropropane, 4-methyl-2-pentanone, and benzyl chloride. The LCS has low recoveries for 1,2,4-trichlorobenzene, and hexachlorobutadiene.

The WG238596-4 LCS has high recoveries for tetrahydrofuran, 1,4-dioxane, 4-methyl-2-pentanone, 2-hexanone, and benzyl chloride.

The WG238596-6 LCS has a high recovery for 1,2-dichloropropane.

ALPHA ANALYTICAL LABORATORIES
CERTIFICATE OF ANALYSIS

MA:M-MA086 NH:200301-A CT:PH-0574 ME:MA086 RI:65 NY:11148 NJ:MA935 Army:USACE

Laboratory Sample Number: L0605827-01
GYM-2
Sample Matrix: SOIL_VAPOR

Date Collected: 27-APR-2006 12:19
Date Received : 28-APR-2006
Date Reported : 09-MAY-2006

Condition of Sample: Satisfactory

Field Prep: None

Number & Type of Containers: 1-Can

PARAMETER	RESULT	UNITS	RDL	REF METHOD	DATE PREP	DATE ANAL	ID
Volatile Organic Compounds in Air - ug/m3				48 TO-15		0506 04:27	PS
1,1,1-Trichloroethane	ND	ug/m3	27.2				
1,1,2,2-Tetrachloroethane	ND	ug/m3	34.3				
1,1,2-Trichloroethane	ND	ug/m3	27.2				
1,1-Dichloroethane	ND	ug/m3	20.2				
1,1-Dichloroethene	ND	ug/m3	19.8				
1,2,4-Trichlorobenzene	ND	ug/m3	37.1				
1,2,4-Trimethylbenzene	ND	ug/m3	24.6				
1,2-Dibromoethane	ND	ug/m3	38.4				
1,2-Dichlorobenzene	ND	ug/m3	30.0				
1,2-Dichloroethane	ND	ug/m3	20.2				
1,2-Dichloropropane	ND	ug/m3	23.1				
1,3,5-Trimethylbenzene	ND	ug/m3	24.6				
1,3-Butadiene	ND	ug/m3	11.0				
1,3-Dichlorobenzene	ND	ug/m3	30.0				
1,4-Dichlorobenzene	ND	ug/m3	30.0				
1,4-Dioxane	ND	ug/m3	36.0				
2,2,4-Trimethylpentane	63.1	ug/m3	23.3				
2-Butanone	226	ug/m3	14.7				
2-Hexanone	ND	ug/m3	20.5				
3-Chloropropene	ND	ug/m3	15.6				
4-Ethyltoluene	ND	ug/m3	24.6				
Acetone	207	ug/m3	47.5				
Benzene	ND	ug/m3	16.0				
Benzyl chloride	ND	ug/m3	25.9				
Bromodichloromethane	ND	ug/m3	33.5				
Bromoform	ND	ug/m3	51.6				
Bromomethane	ND	ug/m3	19.4				
Carbon disulfide	ND	ug/m3	15.6				
Carbon tetrachloride	ND	ug/m3	31.4				
Chlorobenzene	ND	ug/m3	23.0				
Chloroethane	ND	ug/m3	13.2				
Chloroform	ND	ug/m3	24.4				
Chloromethane	ND	ug/m3	10.3				
cis-1,2-Dichloroethene	ND	ug/m3	19.8				
cis-1,3-Dichloropropene	ND	ug/m3	22.7				
Cyclohexane	ND	ug/m3	17.2				
Dibromochloromethane	ND	ug/m3	42.6				
Dichlorodifluoromethane	ND	ug/m3	49.4				

Comments: Complete list of References and Glossary of Terms found in Addendum I

ALPHA ANALYTICAL LABORATORIES
CERTIFICATE OF ANALYSIS

Laboratory Sample Number: L0605827-01
GYM-2

PARAMETER	RESULT	UNITS	RDL	REF METHOD	DATE PREP	DATE ANAL	ID
Volatile Organic Compounds in Air - ug/m3 cont'd				48 TO-15		0506 04:27	PS
Ethyl Alcohol	ND	ug/m3	37.6				
Ethyl Acetate	ND	ug/m3	18.0				
Ethylbenzene	ND	ug/m3	21.7				
1,1,2-Trichloro-1,2,2-Trifluoroethane	ND	ug/m3	38.3				
1,2-Dichloro-1,1,2,2-tetrafluoroethane	ND	ug/m3	34.9				
Hexachlorobutadiene	ND	ug/m3	53.3				
iso-Propyl Alcohol	ND	ug/m3	12.3				
Methylene chloride	ND	ug/m3	34.7				
4-Methyl-2-pentanone	ND	ug/m3	20.5				
Methyl tert butyl ether	84.8	ug/m3	18.0				
p/m-Xylene	ND	ug/m3	43.4				
o-Xylene	ND	ug/m3	21.7				
Heptane	ND	ug/m3	20.5				
n-Hexane	ND	ug/m3	35.2				
Propylene	ND	ug/m3	17.2				
Styrene	ND	ug/m3	21.3				
Tetrachloroethene	ND	ug/m3	33.9				
Tetrahydrofuran	70.4	ug/m3	14.7				
Toluene	28.7	ug/m3	18.8				
trans-1,2-Dichloroethene	ND	ug/m3	19.8				
trans-1,3-Dichloropropene	ND	ug/m3	22.7				
Trichloroethene	ND	ug/m3	26.8				
Trichlorofluoromethane	ND	ug/m3	28.1				
Vinyl acetate	ND	ug/m3	17.6				
Vinyl bromide	ND	ug/m3	21.8				
Vinyl chloride	ND	ug/m3	12.8				
Volatile Organic Compounds in Air - ppbV				48 TO-15		0506 04:27	PS
1,1,1-Trichloroethane	ND	ppbV	5.00				
1,1,2,2-Tetrachloroethane	ND	ppbV	5.00				
1,1,2-Trichloroethane	ND	ppbV	5.00				
1,1-Dichloroethane	ND	ppbV	5.00				
1,1-Dichloroethene	ND	ppbV	5.00				
1,2,4-Trichlorobenzene	ND	ppbV	5.00				
1,2,4-Trimethylbenzene	ND	ppbV	5.00				
1,2-Dibromoethane	ND	ppbV	5.00				
1,2-Dichlorobenzene	ND	ppbV	5.00				
1,2-Dichloroethane	ND	ppbV	5.00				
1,2-Dichloropropane	ND	ppbV	5.00				
1,3,5-Trimethylbenzene	ND	ppbV	5.00				
1,3-Butadiene	ND	ppbV	5.00				
1,3-Dichlorobenzene	ND	ppbV	5.00				
1,4-Dichlorobenzene	ND	ppbV	5.00				
1,4-Dioxane	ND	ppbV	10.0				
2,2,4-Trimethylpentane	13.5	ppbV	5.00				
2-Butanone	76.8	ppbV	5.00				
2-Hexanone	ND	ppbV	5.00				

Comments: Complete list of References and Glossary of Terms found in Addendum I

ALPHA ANALYTICAL LABORATORIES
CERTIFICATE OF ANALYSIS

Laboratory Sample Number: L0605827-01
GYM-2

PARAMETER	RESULT	UNITS	RDL	REF METHOD	DATE PREP	DATE ANAL	ID
Volatile Organic Compounds in Air - ppbV cont'd				48 TO-15		0506 04:27	PS
3-Chloropropene	ND	ppbV	5.00				
4-Ethyltoluene	ND	ppbV	5.00				
Acetone	87.3	ppbV	20.0				
Benzene	ND	ppbV	5.00				
Benzyl chloride	ND	ppbV	5.00				
Bromodichloromethane	ND	ppbV	5.00				
Bromoform	ND	ppbV	5.00				
Bromomethane	ND	ppbV	5.00				
Carbon disulfide	ND	ppbV	5.00				
Carbon tetrachloride	ND	ppbV	5.00				
Chlorobenzene	ND	ppbV	5.00				
Chloroethane	ND	ppbV	5.00				
Chloroform	ND	ppbV	5.00				
Chloromethane	ND	ppbV	5.00				
cis-1,2-Dichloroethene	ND	ppbV	5.00				
cis-1,3-Dichloropropene	ND	ppbV	5.00				
Cyclohexane	ND	ppbV	5.00				
Dibromochloromethane	ND	ppbV	5.00				
Dichlorodifluoromethane	ND	ppbV	10.0				
Ethyl Alcohol	ND	ppbV	20.0				
Ethyl Acetate	ND	ppbV	5.00				
Ethylbenzene	ND	ppbV	5.00				
1,1,2-Trichloro-1,2,2-Trifluoroethane	ND	ppbV	5.00				
1,2-Dichloro-1,1,2,2-tetrafluoroethane	ND	ppbV	5.00				
Hexachlorobutadiene	ND	ppbV	5.00				
iso-Propyl Alcohol	ND	ppbV	5.00				
Methylene chloride	ND	ppbV	10.0				
4-Methyl-2-pentanone	ND	ppbV	5.00				
Methyl tert butyl ether	23.6	ppbV	5.00				
p/m-Xylene	ND	ppbV	10.0				
o-Xylene	ND	ppbV	5.00				
Heptane	ND	ppbV	5.00				
n-Hexane	ND	ppbV	10.0				
Propylene	ND	ppbV	10.0				
Styrene	ND	ppbV	5.00				
Tetrachloroethene	ND	ppbV	5.00				
Tetrahydrofuran	23.9	ppbV	5.00				
Toluene	7.62	ppbV	5.00				
trans-1,2-Dichloroethene	ND	ppbV	5.00				
trans-1,3-Dichloropropene	ND	ppbV	5.00				
Trichloroethene	ND	ppbV	5.00				
Trichlorofluoromethane	ND	ppbV	5.00				
Vinyl acetate	ND	ppbV	5.00				
Vinyl bromide	ND	ppbV	5.00				
Vinyl chloride	ND	ppbV	5.00				

Comments: Complete list of References and Glossary of Terms found in Addendum I

ALPHA ANALYTICAL LABORATORIES
CERTIFICATE OF ANALYSIS

MA:M-MA086 NH:200301-A CT:PH-0574 ME:MA086 RI:65 NY:11148 NJ:MA935 Army:USACE

Laboratory Sample Number: L0605827-02
GYM-2A
Sample Matrix: SOIL_VAPOR

Date Collected: 27-APR-2006 12:01
Date Received : 28-APR-2006
Date Reported : 09-MAY-2006

Condition of Sample: Satisfactory

Field Prep: None

Number & Type of Containers: 1-Can

PARAMETER	RESULT	UNITS	RDL	REF METHOD	DATE PREP	DATE ANAL	ID
Volatile Organic Compounds in Air - ug/m3				48 TO-15		0506 08:25	PS
1,1,1-Trichloroethane	ND	ug/m3	2.72				
1,1,2,2-Tetrachloroethane	ND	ug/m3	3.43				
1,1,2-Trichloroethane	ND	ug/m3	2.72				
1,1-Dichloroethane	ND	ug/m3	2.02				
1,1-Dichloroethene	ND	ug/m3	1.98				
1,2,4-Trichlorobenzene	ND	ug/m3	3.71				
1,2,4-Trimethylbenzene	ND	ug/m3	2.46				
1,2-Dibromoethane	ND	ug/m3	3.84				
1,2-Dichlorobenzene	ND	ug/m3	3.00				
1,2-Dichloroethane	ND	ug/m3	2.02				
1,2-Dichloropropane	ND	ug/m3	2.31				
1,3,5-Trimethylbenzene	ND	ug/m3	2.46				
1,3-Butadiene	ND	ug/m3	1.10				
1,3-Dichlorobenzene	ND	ug/m3	3.00				
1,4-Dichlorobenzene	ND	ug/m3	3.00				
1,4-Dioxane	ND	ug/m3	3.60				
2,2,4-Trimethylpentane	ND	ug/m3	2.33				
2-Butanone	22.0	ug/m3	1.47				
2-Hexanone	ND	ug/m3	2.05				
3-Chloropropene	ND	ug/m3	1.56				
4-Ethyltoluene	ND	ug/m3	2.46				
Acetone	8.93	ug/m3	4.75				
Benzene	ND	ug/m3	1.60				
Benzyl chloride	ND	ug/m3	2.59				
Bromodichloromethane	ND	ug/m3	3.35				
Bromoform	ND	ug/m3	5.16				
Bromomethane	ND	ug/m3	1.94				
Carbon disulfide	ND	ug/m3	1.56				
Carbon tetrachloride	ND	ug/m3	3.14				
Chlorobenzene	ND	ug/m3	2.30				
Chloroethane	ND	ug/m3	1.32				
Chloroform	ND	ug/m3	2.44				
Chloromethane	ND	ug/m3	1.03				
cis-1,2-Dichloroethene	ND	ug/m3	1.98				
cis-1,3-Dichloropropene	ND	ug/m3	2.27				
Cyclohexane	ND	ug/m3	1.72				
Dibromochloromethane	ND	ug/m3	4.26				
Dichlorodifluoromethane	ND	ug/m3	4.94				

Comments: Complete list of References and Glossary of Terms found in Addendum I

ALPHA ANALYTICAL LABORATORIES
CERTIFICATE OF ANALYSIS

Laboratory Sample Number: L0605827-02
GYM-2A

PARAMETER	RESULT	UNITS	RDL	REF METHOD	DATE PREP	DATE ANAL	ID
Volatile Organic Compounds in Air - ug/m3 cont'd				48 TO-15		0506 08:25	PS
Ethyl Alcohol	12.5	ug/m3	3.76				
Ethyl Acetate	ND	ug/m3	1.80				
Ethylbenzene	ND	ug/m3	2.17				
1,1,2-Trichloro-1,2,2-Trifluoroethane	ND	ug/m3	3.83				
1,2-Dichloro-1,1,2,2-tetrafluoroethane	ND	ug/m3	3.49				
Hexachlorobutadiene	ND	ug/m3	5.33				
iso-Propyl Alcohol	ND	ug/m3	1.23				
Methylene chloride	12.0	ug/m3	3.47				
4-Methyl-2-pentanone	ND	ug/m3	2.05				
Methyl tert butyl ether	ND	ug/m3	1.80				
p/m-Xylene	ND	ug/m3	4.34				
o-Xylene	ND	ug/m3	2.17				
Heptane	ND	ug/m3	2.05				
n-Hexane	ND	ug/m3	3.52				
Propylene	ND	ug/m3	1.72				
Styrene	ND	ug/m3	2.13				
Tetrachloroethene	ND	ug/m3	3.39				
Tetrahydrofuran	ND	ug/m3	1.47				
Toluene	26.6	ug/m3	1.88				
trans-1,2-Dichloroethene	ND	ug/m3	1.98				
trans-1,3-Dichloropropene	ND	ug/m3	2.27				
Trichloroethene	ND	ug/m3	2.68				
Trichlorofluoromethane	ND	ug/m3	2.81				
Vinyl acetate	ND	ug/m3	1.76				
Vinyl bromide	ND	ug/m3	2.18				
Vinyl chloride	ND	ug/m3	1.28				
Volatile Organic Compounds in Air - ppbV				48 TO-15		0506 08:25	PS
1,1,1-Trichloroethane	ND	ppbV	0.500				
1,1,2,2-Tetrachloroethane	ND	ppbV	0.500				
1,1,2-Trichloroethane	ND	ppbV	0.500				
1,1-Dichloroethane	ND	ppbV	0.500				
1,1-Dichloroethene	ND	ppbV	0.500				
1,2,4-Trichlorobenzene	ND	ppbV	0.500				
1,2,4-Trimethylbenzene	ND	ppbV	0.500				
1,2-Dibromoethane	ND	ppbV	0.500				
1,2-Dichlorobenzene	ND	ppbV	0.500				
1,2-Dichloroethane	ND	ppbV	0.500				
1,2-Dichloropropane	ND	ppbV	0.500				
1,3,5-Trimethylbenzene	ND	ppbV	0.500				
1,3-Butadiene	ND	ppbV	0.500				
1,3-Dichlorobenzene	ND	ppbV	0.500				
1,4-Dichlorobenzene	ND	ppbV	0.500				
1,4-Dioxane	ND	ppbV	1.00				
2,2,4-Trimethylpentane	ND	ppbV	0.500				
2-Butanone	7.48	ppbV	0.500				
2-Hexanone	ND	ppbV	0.500				

Comments: Complete list of References and Glossary of Terms found in Addendum I

ALPHA ANALYTICAL LABORATORIES
CERTIFICATE OF ANALYSIS

Laboratory Sample Number: L0605827-02
GYM-2A

PARAMETER	RESULT	UNITS	RDL	REF METHOD	DATE PREP	DATE ANAL	ID
Volatile Organic Compounds in Air - ppbV cont'd				48 TO-15		0506 08:25	PS
3-Chloropropene	ND	ppbV	0.500				
4-Ethyltoluene	ND	ppbV	0.500				
Acetone	3.76	ppbV	2.00				
Benzene	ND	ppbV	0.500				
Benzyl chloride	ND	ppbV	0.500				
Bromodichloromethane	ND	ppbV	0.500				
Bromoform	ND	ppbV	0.500				
Bromomethane	ND	ppbV	0.500				
Carbon disulfide	ND	ppbV	0.500				
Carbon tetrachloride	ND	ppbV	0.500				
Chlorobenzene	ND	ppbV	0.500				
Chloroethane	ND	ppbV	0.500				
Chloroform	ND	ppbV	0.500				
Chloromethane	ND	ppbV	0.500				
cis-1,2-Dichloroethene	ND	ppbV	0.500				
cis-1,3-Dichloropropene	ND	ppbV	0.500				
Cyclohexane	ND	ppbV	0.500				
Dibromochloromethane	ND	ppbV	0.500				
Dichlorodifluoromethane	ND	ppbV	1.00				
Ethyl Alcohol	6.64	ppbV	2.00				
Ethyl Acetate	ND	ppbV	0.500				
Ethylbenzene	ND	ppbV	0.500				
1,1,2-Trichloro-1,2,2-Trifluoroethane	ND	ppbV	0.500				
1,2-Dichloro-1,1,2,2-tetrafluoroethane	ND	ppbV	0.500				
Hexachlorobutadiene	ND	ppbV	0.500				
iso-Propyl Alcohol	ND	ppbV	0.500				
Methylene chloride	3.46	ppbV	1.00				
4-Methyl-2-pentanone	ND	ppbV	0.500				
Methyl tert butyl ether	ND	ppbV	0.500				
p/m-Xylene	ND	ppbV	1.00				
o-Xylene	ND	ppbV	0.500				
Heptane	ND	ppbV	0.500				
n-Hexane	ND	ppbV	1.00				
Propylene	ND	ppbV	1.00				
Styrene	ND	ppbV	0.500				
Tetrachloroethene	ND	ppbV	0.500				
Tetrahydrofuran	ND	ppbV	0.500				
Toluene	7.07	ppbV	0.500				
trans-1,2-Dichloroethene	ND	ppbV	0.500				
trans-1,3-Dichloropropene	ND	ppbV	0.500				
Trichloroethene	ND	ppbV	0.500				
Trichlorofluoromethane	ND	ppbV	0.500				
Vinyl acetate	ND	ppbV	0.500				
Vinyl bromide	ND	ppbV	0.500				
Vinyl chloride	ND	ppbV	0.500				

Comments: Complete list of References and Glossary of Terms found in Addendum I

ALPHA ANALYTICAL LABORATORIES
CERTIFICATE OF ANALYSIS

MA:M-MA086 NH:200301-A CT:PH-0574 ME:MA086 RI:65 NY:11148 NJ:MA935 Army:USACE

Laboratory Sample Number: L0605827-03
GYM-3A
Sample Matrix: SOIL_VAPOR

Date Collected: 27-APR-2006 12:00
Date Received : 28-APR-2006
Date Reported : 09-MAY-2006

Condition of Sample: Satisfactory

Field Prep: None

Number & Type of Containers: 1-Can

PARAMETER	RESULT	UNITS	RDL	REF METHOD	DATE PREP	DATE ANAL	ID
Volatile Organic Compounds in Air - ug/m3				48 TO-15		0509 01:55	PS
1,1,1-Trichloroethane	ND	ug/m3	2.72				
1,1,2,2-Tetrachloroethane	ND	ug/m3	3.43				
1,1,2-Trichloroethane	ND	ug/m3	2.72				
1,1-Dichloroethane	ND	ug/m3	2.02				
1,1-Dichloroethene	ND	ug/m3	1.98				
1,2,4-Trichlorobenzene	ND	ug/m3	3.71				
1,2,4-Trimethylbenzene	ND	ug/m3	2.46				
1,2-Dibromoethane	ND	ug/m3	3.84				
1,2-Dichlorobenzene	ND	ug/m3	3.00				
1,2-Dichloroethane	ND	ug/m3	2.02				
1,2-Dichloropropane	ND	ug/m3	2.31				
1,3,5-Trimethylbenzene	ND	ug/m3	2.46				
1,3-Butadiene	ND	ug/m3	1.10				
1,3-Dichlorobenzene	ND	ug/m3	3.00				
1,4-Dichlorobenzene	ND	ug/m3	3.00				
1,4-Dioxane	ND	ug/m3	3.60				
2,2,4-Trimethylpentane	ND	ug/m3	2.33				
2-Butanone	12.2	ug/m3	1.47				
2-Hexanone	ND	ug/m3	2.05				
3-Chloropropene	ND	ug/m3	1.56				
4-Ethyltoluene	ND	ug/m3	2.46				
Acetone	12.1	ug/m3	4.75				
Benzene	ND	ug/m3	1.60				
Benzyl chloride	ND	ug/m3	2.59				
Bromodichloromethane	ND	ug/m3	3.35				
Bromoform	ND	ug/m3	5.16				
Bromomethane	ND	ug/m3	1.94				
Carbon disulfide	ND	ug/m3	1.56				
Carbon tetrachloride	ND	ug/m3	3.14				
Chlorobenzene	ND	ug/m3	2.30				
Chloroethane	ND	ug/m3	1.32				
Chloroform	ND	ug/m3	2.44				
Chloromethane	ND	ug/m3	1.03				
cis-1,2-Dichloroethene	ND	ug/m3	1.98				
cis-1,3-Dichloropropene	ND	ug/m3	2.27				
Cyclohexane	ND	ug/m3	1.72				
Dibromochloromethane	ND	ug/m3	4.26				
Dichlorodifluoromethane	ND	ug/m3	4.94				

Comments: Complete list of References and Glossary of Terms found in Addendum I

ALPHA ANALYTICAL LABORATORIES
CERTIFICATE OF ANALYSIS

Laboratory Sample Number: L0605827-03
GYM-3A

PARAMETER	RESULT	UNITS	RDL	REF METHOD	DATE PREP	DATE ANAL	ID
Volatile Organic Compounds in Air - ug/m3 cont'd				48 TO-15		0509 01:55	PS
Ethyl Alcohol	9.14	ug/m3	3.76				
Ethyl Acetate	ND	ug/m3	1.80				
Ethylbenzene	ND	ug/m3	2.17				
1,1,2-Trichloro-1,2,2-Trifluoroethane	ND	ug/m3	3.83				
1,2-Dichloro-1,1,2,2-tetrafluoroethane	ND	ug/m3	3.49				
Hexachlorobutadiene	ND	ug/m3	5.33				
iso-Propyl Alcohol	1.32	ug/m3	1.23				
Methylene chloride	23.7	ug/m3	3.47				
4-Methyl-2-pentanone	ND	ug/m3	2.05				
Methyl tert butyl ether	ND	ug/m3	1.80				
p/m-Xylene	ND	ug/m3	4.34				
o-Xylene	ND	ug/m3	2.17				
Heptane	ND	ug/m3	2.05				
n-Hexane	ND	ug/m3	3.52				
Propylene	ND	ug/m3	1.72				
Styrene	ND	ug/m3	2.13				
Tetrachloroethene	ND	ug/m3	3.39				
Tetrahydrofuran	ND	ug/m3	1.47				
Toluene	14.5	ug/m3	1.88				
trans-1,2-Dichloroethene	ND	ug/m3	1.98				
trans-1,3-Dichloropropene	ND	ug/m3	2.27				
Trichloroethene	ND	ug/m3	2.68				
Trichlorofluoromethane	ND	ug/m3	2.81				
Vinyl acetate	ND	ug/m3	1.76				
Vinyl bromide	ND	ug/m3	2.18				
Vinyl chloride	ND	ug/m3	1.28				
Volatile Organic Compounds in Air - ppbV				48 TO-15		0509 01:55	PS
1,1,1-Trichloroethane	ND	ppbV	0.500				
1,1,2,2-Tetrachloroethane	ND	ppbV	0.500				
1,1,2-Trichloroethane	ND	ppbV	0.500				
1,1-Dichloroethane	ND	ppbV	0.500				
1,1-Dichloroethene	ND	ppbV	0.500				
1,2,4-Trichlorobenzene	ND	ppbV	0.500				
1,2,4-Trimethylbenzene	ND	ppbV	0.500				
1,2-Dibromoethane	ND	ppbV	0.500				
1,2-Dichlorobenzene	ND	ppbV	0.500				
1,2-Dichloroethane	ND	ppbV	0.500				
1,2-Dichloropropane	ND	ppbV	0.500				
1,3,5-Trimethylbenzene	ND	ppbV	0.500				
1,3-Butadiene	ND	ppbV	0.500				
1,3-Dichlorobenzene	ND	ppbV	0.500				
1,4-Dichlorobenzene	ND	ppbV	0.500				
1,4-Dioxane	ND	ppbV	1.00				
2,2,4-Trimethylpentane	ND	ppbV	0.500				
2-Butanone	4.12	ppbV	0.500				
2-Hexanone	ND	ppbV	0.500				

Comments: Complete list of References and Glossary of Terms found in Addendum I

ALPHA ANALYTICAL LABORATORIES
CERTIFICATE OF ANALYSIS

Laboratory Sample Number: L0605827-03
GYM-3A

PARAMETER	RESULT	UNITS	RDL	REF METHOD	DATE PREP	DATE ANAL	ID
Volatile Organic Compounds in Air - ppbV cont'd				48 TO-15		0509 01:55	PS
3-Chloropropene	ND	ppbV	0.500				
4-Ethyltoluene	ND	ppbV	0.500				
Acetone	5.10	ppbV	2.00				
Benzene	ND	ppbV	0.500				
Benzyl chloride	ND	ppbV	0.500				
Bromodichloromethane	ND	ppbV	0.500				
Bromoform	ND	ppbV	0.500				
Bromomethane	ND	ppbV	0.500				
Carbon disulfide	ND	ppbV	0.500				
Carbon tetrachloride	ND	ppbV	0.500				
Chlorobenzene	ND	ppbV	0.500				
Chloroethane	ND	ppbV	0.500				
Chloroform	ND	ppbV	0.500				
Chloromethane	ND	ppbV	0.500				
cis-1,2-Dichloroethene	ND	ppbV	0.500				
cis-1,3-Dichloropropene	ND	ppbV	0.500				
Cyclohexane	ND	ppbV	0.500				
Dibromochloromethane	ND	ppbV	0.500				
Dichlorodifluoromethane	ND	ppbV	1.00				
Ethyl Alcohol	4.86	ppbV	2.00				
Ethyl Acetate	ND	ppbV	0.500				
Ethylbenzene	ND	ppbV	0.500				
1,1,2-Trichloro-1,2,2-Trifluoroethane	ND	ppbV	0.500				
1,2-Dichloro-1,1,2,2-tetrafluoroethane	ND	ppbV	0.500				
Hexachlorobutadiene	ND	ppbV	0.500				
iso-Propyl Alcohol	0.538	ppbV	0.500				
Methylene chloride	6.83	ppbV	1.00				
4-Methyl-2-pentanone	ND	ppbV	0.500				
Methyl tert butyl ether	ND	ppbV	0.500				
p/m-Xylene	ND	ppbV	1.00				
o-Xylene	ND	ppbV	0.500				
Heptane	ND	ppbV	0.500				
n-Hexane	ND	ppbV	1.00				
Propylene	ND	ppbV	1.00				
Styrene	ND	ppbV	0.500				
Tetrachloroethene	ND	ppbV	0.500				
Tetrahydrofuran	ND	ppbV	0.500				
Toluene	3.86	ppbV	0.500				
trans-1,2-Dichloroethene	ND	ppbV	0.500				
trans-1,3-Dichloropropene	ND	ppbV	0.500				
Trichloroethene	ND	ppbV	0.500				
Trichlorofluoromethane	ND	ppbV	0.500				
Vinyl acetate	ND	ppbV	0.500				
Vinyl bromide	ND	ppbV	0.500				
Vinyl chloride	ND	ppbV	0.500				

Comments: Complete list of References and Glossary of Terms found in Addendum I

ALPHA ANALYTICAL LABORATORIES
CERTIFICATE OF ANALYSIS

MA:M-MA086 NH:200301-A CT:PH-0574 ME:MA086 RI:65 NY:11148 NJ:MA935 Army:USACE

Laboratory Sample Number: L0605827-04
AUD-2A
Sample Matrix: SOIL_VAPOR

Date Collected: 27-APR-2006 12:29
Date Received : 28-APR-2006
Date Reported : 09-MAY-2006

Condition of Sample: Satisfactory

Field Prep: None

Number & Type of Containers: 1-Can

PARAMETER	RESULT	UNITS	RDL	REF METHOD	DATE PREP	DATE ANAL	ID
Volatile Organic Compounds in Air - ug/m3				48 TO-15		0509 02:28	PS
1,1,1-Trichloroethane	ND	ug/m3	2.72				
1,1,2,2-Tetrachloroethane	ND	ug/m3	3.43				
1,1,2-Trichloroethane	ND	ug/m3	2.72				
1,1-Dichloroethane	ND	ug/m3	2.02				
1,1-Dichloroethene	ND	ug/m3	1.98				
1,2,4-Trichlorobenzene	ND	ug/m3	3.71				
1,2,4-Trimethylbenzene	ND	ug/m3	2.46				
1,2-Dibromoethane	ND	ug/m3	3.84				
1,2-Dichlorobenzene	ND	ug/m3	3.00				
1,2-Dichloroethane	ND	ug/m3	2.02				
1,2-Dichloropropane	ND	ug/m3	2.31				
1,3,5-Trimethylbenzene	ND	ug/m3	2.46				
1,3-Butadiene	ND	ug/m3	1.10				
1,3-Dichlorobenzene	ND	ug/m3	3.00				
1,4-Dichlorobenzene	ND	ug/m3	3.00				
1,4-Dioxane	ND	ug/m3	3.60				
2,2,4-Trimethylpentane	ND	ug/m3	2.33				
2-Butanone	13.0	ug/m3	1.47				
2-Hexanone	ND	ug/m3	2.05				
3-Chloropropene	ND	ug/m3	1.56				
4-Ethyltoluene	ND	ug/m3	2.46				
Acetone	24.6	ug/m3	4.75				
Benzene	ND	ug/m3	1.60				
Benzyl chloride	ND	ug/m3	2.59				
Bromodichloromethane	ND	ug/m3	3.35				
Bromoform	ND	ug/m3	5.16				
Bromomethane	ND	ug/m3	1.94				
Carbon disulfide	ND	ug/m3	1.56				
Carbon tetrachloride	ND	ug/m3	3.14				
Chlorobenzene	ND	ug/m3	2.30				
Chloroethane	ND	ug/m3	1.32				
Chloroform	ND	ug/m3	2.44				
Chloromethane	ND	ug/m3	1.03				
cis-1,2-Dichloroethene	ND	ug/m3	1.98				
cis-1,3-Dichloropropene	ND	ug/m3	2.27				
Cyclohexane	ND	ug/m3	1.72				
Dibromochloromethane	ND	ug/m3	4.26				
Dichlorodifluoromethane	ND	ug/m3	4.94				

Comments: Complete list of References and Glossary of Terms found in Addendum I

ALPHA ANALYTICAL LABORATORIES
CERTIFICATE OF ANALYSIS

Laboratory Sample Number: L0605827-04
AUD-2A

PARAMETER	RESULT	UNITS	RDL	REF METHOD	DATE PREP	DATE ANAL	ID
Volatile Organic Compounds in Air - ug/m3 cont'd				48 TO-15		0509 02:28	PS
Ethyl Alcohol	25.0	ug/m3	3.76				
Ethyl Acetate	ND	ug/m3	1.80				
Ethylbenzene	ND	ug/m3	2.17				
1,1,2-Trichloro-1,2,2-Trifluoroethane	ND	ug/m3	3.83				
1,2-Dichloro-1,1,2,2-tetrafluoroethane	ND	ug/m3	3.49				
Hexachlorobutadiene	ND	ug/m3	5.33				
iso-Propyl Alcohol	6.72	ug/m3	1.23				
Methylene chloride	6.27	ug/m3	3.47				
4-Methyl-2-pentanone	ND	ug/m3	2.05				
Methyl tert butyl ether	ND	ug/m3	1.80				
p/m-Xylene	ND	ug/m3	4.34				
o-Xylene	ND	ug/m3	2.17				
Heptane	ND	ug/m3	2.05				
n-Hexane	ND	ug/m3	3.52				
Propylene	ND	ug/m3	1.72				
Styrene	ND	ug/m3	2.13				
Tetrachloroethene	ND	ug/m3	3.39				
Tetrahydrofuran	2.86	ug/m3	1.47				
Toluene	21.0	ug/m3	1.88				
trans-1,2-Dichloroethene	ND	ug/m3	1.98				
trans-1,3-Dichloropropene	ND	ug/m3	2.27				
Trichloroethene	ND	ug/m3	2.68				
Trichlorofluoromethane	ND	ug/m3	2.81				
Vinyl acetate	ND	ug/m3	1.76				
Vinyl bromide	ND	ug/m3	2.18				
Vinyl chloride	ND	ug/m3	1.28				
Volatile Organic Compounds in Air - ppbV				48 TO-15		0509 02:28	PS
1,1,1-Trichloroethane	ND	ppbV	0.500				
1,1,2,2-Tetrachloroethane	ND	ppbV	0.500				
1,1,2-Trichloroethane	ND	ppbV	0.500				
1,1-Dichloroethane	ND	ppbV	0.500				
1,1-Dichloroethene	ND	ppbV	0.500				
1,2,4-Trichlorobenzene	ND	ppbV	0.500				
1,2,4-Trimethylbenzene	ND	ppbV	0.500				
1,2-Dibromoethane	ND	ppbV	0.500				
1,2-Dichlorobenzene	ND	ppbV	0.500				
1,2-Dichloroethane	ND	ppbV	0.500				
1,2-Dichloropropane	ND	ppbV	0.500				
1,3,5-Trimethylbenzene	ND	ppbV	0.500				
1,3-Butadiene	ND	ppbV	0.500				
1,3-Dichlorobenzene	ND	ppbV	0.500				
1,4-Dichlorobenzene	ND	ppbV	0.500				
1,4-Dioxane	ND	ppbV	1.00				
2,2,4-Trimethylpentane	ND	ppbV	0.500				
2-Butanone	4.42	ppbV	0.500				
2-Hexanone	ND	ppbV	0.500				

Comments: Complete list of References and Glossary of Terms found in Addendum I

ALPHA ANALYTICAL LABORATORIES
CERTIFICATE OF ANALYSIS

Laboratory Sample Number: L0605827-04
AUD-2A

PARAMETER	RESULT	UNITS	RDL	REF METHOD	DATE PREP	DATE ANAL	ID
Volatile Organic Compounds in Air - ppbV cont'd				48 TO-15		0509 02:28	PS
3-Chloropropene	ND	ppbV	0.500				
4-Ethyltoluene	ND	ppbV	0.500				
Acetone	10.4	ppbV	2.00				
Benzene	ND	ppbV	0.500				
Benzyl chloride	ND	ppbV	0.500				
Bromodichloromethane	ND	ppbV	0.500				
Bromoform	ND	ppbV	0.500				
Bromomethane	ND	ppbV	0.500				
Carbon disulfide	ND	ppbV	0.500				
Carbon tetrachloride	ND	ppbV	0.500				
Chlorobenzene	ND	ppbV	0.500				
Chloroethane	ND	ppbV	0.500				
Chloroform	ND	ppbV	0.500				
Chloromethane	ND	ppbV	0.500				
cis-1,2-Dichloroethene	ND	ppbV	0.500				
cis-1,3-Dichloropropene	ND	ppbV	0.500				
Cyclohexane	ND	ppbV	0.500				
Dibromochloromethane	ND	ppbV	0.500				
Dichlorodifluoromethane	ND	ppbV	1.00				
Ethyl Alcohol	13.3	ppbV	2.00				
Ethyl Acetate	ND	ppbV	0.500				
Ethylbenzene	ND	ppbV	0.500				
1,1,2-Trichloro-1,2,2-Trifluoroethane	ND	ppbV	0.500				
1,2-Dichloro-1,1,2,2-tetrafluoroethane	ND	ppbV	0.500				
Hexachlorobutadiene	ND	ppbV	0.500				
iso-Propyl Alcohol	2.74	ppbV	0.500				
Methylene chloride	1.81	ppbV	1.00				
4-Methyl-2-pentanone	ND	ppbV	0.500				
Methyl tert butyl ether	ND	ppbV	0.500				
p/m-Xylene	ND	ppbV	1.00				
o-Xylene	ND	ppbV	0.500				
Heptane	ND	ppbV	0.500				
n-Hexane	ND	ppbV	1.00				
Propylene	ND	ppbV	1.00				
Styrene	ND	ppbV	0.500				
Tetrachloroethene	ND	ppbV	0.500				
Tetrahydrofuran	0.972	ppbV	0.500				
Toluene	5.59	ppbV	0.500				
trans-1,2-Dichloroethene	ND	ppbV	0.500				
trans-1,3-Dichloropropene	ND	ppbV	0.500				
Trichloroethene	ND	ppbV	0.500				
Trichlorofluoromethane	ND	ppbV	0.500				
Vinyl acetate	ND	ppbV	0.500				
Vinyl bromide	ND	ppbV	0.500				
Vinyl chloride	ND	ppbV	0.500				

Comments: Complete list of References and Glossary of Terms found in Addendum I

ALPHA ANALYTICAL LABORATORIES
CERTIFICATE OF ANALYSIS

MA:M-MA086 NH:200301-A CT:PH-0574 ME:MA086 RI:65 NY:11148 NJ:MA935 Army:USACE

Laboratory Sample Number: L0605827-05
FIELD BLANK
Sample Matrix: SOIL_VAPOR

Date Collected: 27-APR-2006 00:00
Date Received : 28-APR-2006
Date Reported : 09-MAY-2006

Condition of Sample: Satisfactory

Field Prep: None

Number & Type of Containers: 1-Can

PARAMETER	RESULT	UNITS	RDL	REF METHOD	DATE PREP	DATE ANAL	ID
Volatile Organic Compounds in Air - ug/m3				48 TO-15		0507 13:05	PS
1,1,1-Trichloroethane	ND	ug/m3	2.72				
1,1,2,2-Tetrachloroethane	ND	ug/m3	3.43				
1,1,2-Trichloroethane	ND	ug/m3	2.72				
1,1-Dichloroethane	ND	ug/m3	2.02				
1,1-Dichloroethene	ND	ug/m3	1.98				
1,2,4-Trichlorobenzene	ND	ug/m3	3.71				
1,2,4-Trimethylbenzene	ND	ug/m3	2.46				
1,2-Dibromoethane	ND	ug/m3	3.84				
1,2-Dichlorobenzene	ND	ug/m3	3.00				
1,2-Dichloroethane	ND	ug/m3	2.02				
1,2-Dichloropropane	ND	ug/m3	2.31				
1,3,5-Trimethylbenzene	ND	ug/m3	2.46				
1,3-Butadiene	ND	ug/m3	1.10				
1,3-Dichlorobenzene	ND	ug/m3	3.00				
1,4-Dichlorobenzene	ND	ug/m3	3.00				
1,4-Dioxane	ND	ug/m3	3.60				
2,2,4-Trimethylpentane	ND	ug/m3	2.33				
2-Butanone	ND	ug/m3	1.47				
2-Hexanone	ND	ug/m3	2.05				
3-Chloropropene	ND	ug/m3	1.56				
4-Ethyltoluene	ND	ug/m3	2.46				
Acetone	ND	ug/m3	4.75				
Benzene	ND	ug/m3	1.60				
Benzyl chloride	ND	ug/m3	2.59				
Bromodichloromethane	ND	ug/m3	3.35				
Bromoform	ND	ug/m3	5.16				
Bromomethane	ND	ug/m3	1.94				
Carbon disulfide	ND	ug/m3	1.56				
Carbon tetrachloride	ND	ug/m3	3.14				
Chlorobenzene	ND	ug/m3	2.30				
Chloroethane	ND	ug/m3	1.32				
Chloroform	ND	ug/m3	2.44				
Chloromethane	ND	ug/m3	1.03				
cis-1,2-Dichloroethene	ND	ug/m3	1.98				
cis-1,3-Dichloropropene	ND	ug/m3	2.27				
Cyclohexane	ND	ug/m3	1.72				
Dibromochloromethane	ND	ug/m3	4.26				
Dichlorodifluoromethane	ND	ug/m3	4.94				

Comments: Complete list of References and Glossary of Terms found in Addendum I

ALPHA ANALYTICAL LABORATORIES
CERTIFICATE OF ANALYSIS

Laboratory Sample Number: L0605827-05
FIELD BLANK

PARAMETER	RESULT	UNITS	RDL	REF METHOD	DATE PREP	DATE ANAL	ID
Volatile Organic Compounds in Air - ug/m3 cont'd				48 TO-15		0507 13:05	PS
Ethyl Alcohol	ND	ug/m3	3.76				
Ethyl Acetate	ND	ug/m3	1.80				
Ethylbenzene	ND	ug/m3	2.17				
1,1,2-Trichloro-1,2,2-Trifluoroethane	ND	ug/m3	3.83				
1,2-Dichloro-1,1,2,2-tetrafluoroethane	ND	ug/m3	3.49				
Hexachlorobutadiene	ND	ug/m3	5.33				
iso-Propyl Alcohol	ND	ug/m3	1.23				
Methylene chloride	ND	ug/m3	3.47				
4-Methyl-2-pentanone	ND	ug/m3	2.05				
Methyl tert butyl ether	ND	ug/m3	1.80				
p/m-Xylene	ND	ug/m3	4.34				
o-Xylene	ND	ug/m3	2.17				
Heptane	ND	ug/m3	2.05				
n-Hexane	ND	ug/m3	3.52				
Propylene	ND	ug/m3	1.72				
Styrene	ND	ug/m3	2.13				
Tetrachloroethene	ND	ug/m3	3.39				
Tetrahydrofuran	ND	ug/m3	1.47				
Toluene	ND	ug/m3	1.88				
trans-1,2-Dichloroethene	ND	ug/m3	1.98				
trans-1,3-Dichloropropene	ND	ug/m3	2.27				
Trichloroethene	ND	ug/m3	2.68				
Trichlorofluoromethane	ND	ug/m3	2.81				
Vinyl acetate	ND	ug/m3	1.76				
Vinyl bromide	ND	ug/m3	2.18				
Vinyl chloride	ND	ug/m3	1.28				
Volatile Organic Compounds in Air - ppbV				48 TO-15		0507 13:05	PS
1,1,1-Trichloroethane	ND	ppbV	0.500				
1,1,2,2-Tetrachloroethane	ND	ppbV	0.500				
1,1,2-Trichloroethane	ND	ppbV	0.500				
1,1-Dichloroethane	ND	ppbV	0.500				
1,1-Dichloroethene	ND	ppbV	0.500				
1,2,4-Trichlorobenzene	ND	ppbV	0.500				
1,2,4-Trimethylbenzene	ND	ppbV	0.500				
1,2-Dibromoethane	ND	ppbV	0.500				
1,2-Dichlorobenzene	ND	ppbV	0.500				
1,2-Dichloroethane	ND	ppbV	0.500				
1,2-Dichloropropane	ND	ppbV	0.500				
1,3,5-Trimethylbenzene	ND	ppbV	0.500				
1,3-Butadiene	ND	ppbV	0.500				
1,3-Dichlorobenzene	ND	ppbV	0.500				
1,4-Dichlorobenzene	ND	ppbV	0.500				
1,4-Dioxane	ND	ppbV	1.00				
2,2,4-Trimethylpentane	ND	ppbV	0.500				
2-Butanone	ND	ppbV	0.500				
2-Hexanone	ND	ppbV	0.500				

Comments: Complete list of References and Glossary of Terms found in Addendum I

ALPHA ANALYTICAL LABORATORIES
CERTIFICATE OF ANALYSIS

Laboratory Sample Number: L0605827-05
FIELD BLANK

PARAMETER	RESULT	UNITS	RDL	REF METHOD	DATE PREP	DATE ANAL	ID
Volatile Organic Compounds in Air - ppbV cont'd				48 TO-15		0507 13:05	PS
3-Chloropropene	ND	ppbV	0.500				
4-Ethyltoluene	ND	ppbV	0.500				
Acetone	ND	ppbV	2.00				
Benzene	ND	ppbV	0.500				
Benzyl chloride	ND	ppbV	0.500				
Bromodichloromethane	ND	ppbV	0.500				
Bromoform	ND	ppbV	0.500				
Bromomethane	ND	ppbV	0.500				
Carbon disulfide	ND	ppbV	0.500				
Carbon tetrachloride	ND	ppbV	0.500				
Chlorobenzene	ND	ppbV	0.500				
Chloroethane	ND	ppbV	0.500				
Chloroform	ND	ppbV	0.500				
Chloromethane	ND	ppbV	0.500				
cis-1,2-Dichloroethene	ND	ppbV	0.500				
cis-1,3-Dichloropropene	ND	ppbV	0.500				
Cyclohexane	ND	ppbV	0.500				
Dibromochloromethane	ND	ppbV	0.500				
Dichlorodifluoromethane	ND	ppbV	1.00				
Ethyl Alcohol	ND	ppbV	2.00				
Ethyl Acetate	ND	ppbV	0.500				
Ethylbenzene	ND	ppbV	0.500				
1,1,2-Trichloro-1,2,2-Trifluoroethane	ND	ppbV	0.500				
1,2-Dichloro-1,1,2,2-tetrafluoroethane	ND	ppbV	0.500				
Hexachlorobutadiene	ND	ppbV	0.500				
iso-Propyl Alcohol	ND	ppbV	0.500				
Methylene chloride	ND	ppbV	1.00				
4-Methyl-2-pentanone	ND	ppbV	0.500				
Methyl tert butyl ether	ND	ppbV	0.500				
p/m-Xylene	ND	ppbV	1.00				
o-Xylene	ND	ppbV	0.500				
Heptane	ND	ppbV	0.500				
n-Hexane	ND	ppbV	1.00				
Propylene	ND	ppbV	1.00				
Styrene	ND	ppbV	0.500				
Tetrachloroethene	ND	ppbV	0.500				
Tetrahydrofuran	ND	ppbV	0.500				
Toluene	ND	ppbV	0.500				
trans-1,2-Dichloroethene	ND	ppbV	0.500				
trans-1,3-Dichloropropene	ND	ppbV	0.500				
Trichloroethene	ND	ppbV	0.500				
Trichlorofluoromethane	ND	ppbV	0.500				
Vinyl acetate	ND	ppbV	0.500				
Vinyl bromide	ND	ppbV	0.500				
Vinyl chloride	ND	ppbV	0.500				

Comments: Complete list of References and Glossary of Terms found in Addendum I

ALPHA ANALYTICAL LABORATORIES
QUALITY ASSURANCE BATCH DUPLICATE ANALYSIS

Laboratory Job Number: L0605827

Parameter	Value 1	Value 2	Units	RPD	RPD Limits
Volatile Organic Compounds in Air for sample(s) 01-05 (L0605826-04, WG238596-2)					
1,1,1-Trichloroethane	ND	ND	ppbV	NC	25
1,1,2,2-Tetrachloroethane	ND	ND	ppbV	NC	25
1,1,2-Trichloroethane	ND	ND	ppbV	NC	25
1,1-Dichloroethane	ND	ND	ppbV	NC	25
1,1-Dichloroethene	ND	ND	ppbV	NC	25
1,2,4-Trichlorobenzene	ND	ND	ppbV	NC	25
1,2,4-Trimethylbenzene	ND	ND	ppbV	NC	25
1,2-Dibromoethane	ND	ND	ppbV	NC	25
1,2-Dichlorobenzene	ND	ND	ppbV	NC	25
1,2-Dichloroethane	ND	ND	ppbV	NC	25
1,2-Dichloropropane	ND	ND	ppbV	NC	25
1,3,5-Trimethylbenzene	ND	ND	ppbV	NC	25
1,3-Butadiene	ND	ND	ppbV	NC	25
1,3-Dichlorobenzene	ND	ND	ppbV	NC	25
1,4-Dichlorobenzene	ND	ND	ppbV	NC	25
1,4-Dioxane	ND	ND	ppbV	NC	25
2,2,4-Trimethylpentane	ND	ND	ppbV	NC	25
2-Butanone	24.6	26.9	ppbV	9	25
2-Hexanone	ND	ND	ppbV	NC	25
3-Chloropropene	ND	ND	ppbV	NC	25
4-Ethyltoluene	ND	ND	ppbV	NC	25
Acetone	42.3	45.4	ppbV	7	25
Benzene	ND	ND	ppbV	NC	25
Benzyl chloride	ND	ND	ppbV	NC	25
Bromodichloromethane	ND	ND	ppbV	NC	25
Bromoform	ND	ND	ppbV	NC	25
Bromomethane	ND	ND	ppbV	NC	25
Carbon disulfide	ND	ND	ppbV	NC	25
Carbon tetrachloride	ND	ND	ppbV	NC	25
Chlorobenzene	ND	ND	ppbV	NC	25
Chloroethane	ND	ND	ppbV	NC	25
Chloroform	ND	ND	ppbV	NC	25
Chloromethane	ND	ND	ppbV	NC	25
cis-1,2-Dichloroethene	ND	ND	ppbV	NC	25
cis-1,3-Dichloropropene	ND	ND	ppbV	NC	25
Cyclohexane	ND	ND	ppbV	NC	25
Dibromochloromethane	ND	ND	ppbV	NC	25
Dichlorodifluoromethane	ND	ND	ppbV	NC	25
Ethyl Alcohol	ND	ND	ppbV	NC	25
Ethyl Acetate	ND	ND	ppbV	NC	25
Ethylbenzene	ND	ND	ppbV	NC	25
1,1,2-Trichloro-1,2,2-Trifluor oethane	ND	ND	ppbV	NC	25
1,2-Dichloro-1,1,2,2-tetrafluo roethane	ND	ND	ppbV	NC	25
Hexachlorobutadiene	ND	ND	ppbV	NC	25
iso-Propyl Alcohol	ND	ND	ppbV	NC	25
Methylene chloride	ND	ND	ppbV	NC	25

ALPHA ANALYTICAL LABORATORIES
QUALITY ASSURANCE BATCH DUPLICATE ANALYSIS

Laboratory Job Number: L0605827

Continued

Parameter	Value 1	Value 2	Units	RPD	RPD Limits
Volatile Organic Compounds in Air for sample(s) 01-05 (L0605826-04, WG238596-2)					
4-Methyl-2-pentanone	ND	ND	ppbV	NC	25
Methyl tert butyl ether	ND	ND	ppbV	NC	25
p/m-Xylene	ND	ND	ppbV	NC	25
o-Xylene	ND	ND	ppbV	NC	25
Heptane	ND	ND	ppbV	NC	25
n-Hexane	ND	ND	ppbV	NC	25
Propylene	26.3	27.2	ppbV	3	25
Styrene	ND	ND	ppbV	NC	25
Tetrachloroethene	ND	ND	ppbV	NC	25
Tetrahydrofuran	ND	ND	ppbV	NC	25
Toluene	24.9	22.6	ppbV	10	25
trans-1,2-Dichloroethene	ND	ND	ppbV	NC	25
trans-1,3-Dichloropropene	ND	ND	ppbV	NC	25
Trichloroethene	ND	ND	ppbV	NC	25
Trichlorofluoromethane	ND	ND	ppbV	NC	25
Vinyl acetate	ND	ND	ppbV	NC	25
Vinyl bromide	ND	ND	ppbV	NC	25
Vinyl chloride	ND	ND	ppbV	NC	25

ALPHA ANALYTICAL LABORATORIES
QUALITY ASSURANCE BATCH SPIKE ANALYSES

Laboratory Job Number: L0605827

Parameter	% Recovery	QC Criteria
Volatile Organic Compounds in Air LCS for sample(s) 01-02 (WG238596-1)		
1,1,1-Trichloroethane	72	70-130
1,1,2,2-Tetrachloroethane	124	70-130
1,1,2-Trichloroethane	112	70-130
1,1-Dichloroethane	103	70-130
1,1-Dichloroethene	123	70-130
1,2,4-Trichlorobenzene	61	70-130
1,2,4-Trimethylbenzene	127	70-130
1,2-Dibromoethane	120	70-130
1,2-Dichlorobenzene	125	70-130
1,2-Dichloroethane	111	70-130
1,2-Dichloropropane	150	70-130
1,3,5-Trimethylbenzene	120	70-130
1,3-Butadiene	123	70-130
1,3-Dichlorobenzene	122	70-130
1,4-Dichlorobenzene	121	70-130
1,4-Dioxane	118	70-130
2,2,4-Trimethylpentane	125	70-130
2-Butanone	130	70-130
2-Hexanone	116	70-130
3-Chloropropene	100	70-130
4-Ethyltoluene	127	70-130
Acetone	116	70-130
Benzene	120	70-130
Benzyl chloride	134	70-130
Bromodichloromethane	124	70-130
Bromoform	117	70-130
Bromomethane	104	70-130
Carbon disulfide	129	70-130
Carbon tetrachloride	101	70-130
Chlorobenzene	116	70-130
Chloroethane	124	70-130
Chloroform	126	70-130
Chloromethane	125	70-130
cis-1,2-Dichloroethene	129	70-130
cis-1,3-Dichloropropene	129	70-130
Cyclohexane	109	70-130
Dibromochloromethane	114	70-130
Dichlorodifluoromethane	106	70-130
Ethyl Alcohol	122	70-130
Ethyl Acetate	126	70-130
Ethylbenzene	122	70-130
1,1,2-Trichloro-1,2,2-Trifluoroethane	128	70-130
1,2-Dichloro-1,1,2,2-tetrafluoroethane	111	70-130
Hexachlorobutadiene	60	70-130
iso-Propyl Alcohol	114	70-130
Methylene chloride	116	70-130
4-Methyl-2-pentanone	139	70-130
Methyl tert butyl ether	116	70-130

ALPHA ANALYTICAL LABORATORIES
QUALITY ASSURANCE BATCH SPIKE ANALYSES

Laboratory Job Number: L0605827

Continued

Parameter	% Recovery	QC Criteria
Volatile Organic Compounds in Air LCS for sample(s) 01-02 (WG238596-1)		
p/m-Xylene	106	70-130
o-Xylene	126	70-130
Heptane	113	70-130
n-Hexane	93	70-130
Propylene	116	70-130
Styrene	120	70-130
Tetrachloroethene	116	70-130
Tetrahydrofuran	112	70-130
Toluene	119	70-130
trans-1,2-Dichloroethene	129	70-130
trans-1,3-Dichloropropene	106	70-130
Trichloroethene	113	70-130
Trichlorofluoromethane	111	70-130
Vinyl acetate	130	70-130
Vinyl bromide	129	70-130
Vinyl chloride	112	70-130
Volatile Organic Compounds in Air LCS for sample(s) 05 (WG238596-4)		
1,1,1-Trichloroethane	89	70-130
1,1,2,2-Tetrachloroethane	117	70-130
1,1,2-Trichloroethane	86	70-130
1,1-Dichloroethane	86	70-130
1,1-Dichloroethene	88	70-130
1,2,4-Trichlorobenzene	120	70-130
1,2,4-Trimethylbenzene	130	70-130
1,2-Dibromoethane	102	70-130
1,2-Dichlorobenzene	114	70-130
1,2-Dichloroethane	95	70-130
1,2-Dichloropropane	129	70-130
1,3,5-Trimethylbenzene	123	70-130
1,3-Butadiene	88	70-130
1,3-Dichlorobenzene	110	70-130
1,4-Dichlorobenzene	109	70-130
1,4-Dioxane	143	70-130
2,2,4-Trimethylpentane	117	70-130
2-Butanone	116	70-130
2-Hexanone	146	70-130
3-Chloropropene	86	70-130
4-Ethyltoluene	129	70-130
Acetone	101	70-130
Benzene	100	70-130
Benzyl chloride	142	70-130
Bromodichloromethane	107	70-130
Bromoform	104	70-130
Bromomethane	77	70-130
Carbon disulfide	92	70-130
Carbon tetrachloride	97	70-130
Chlorobenzene	102	70-130

ALPHA ANALYTICAL LABORATORIES
QUALITY ASSURANCE BATCH SPIKE ANALYSES

Laboratory Job Number: L0605827

Continued

Parameter	% Recovery	QC Criteria
Volatile Organic Compounds in Air LCS for sample(s) 05 (WG238596-4)		
Chloroethane	104	70-130
Chloroform	106	70-130
Chloromethane	90	70-130
cis-1,2-Dichloroethene	83	70-130
cis-1,3-Dichloropropene	99	70-130
Cyclohexane	109	70-130
Dibromochloromethane	99	70-130
Dichlorodifluoromethane	76	70-130
Ethyl Alcohol	107	70-130
Ethyl Acetate	100	70-130
Ethylbenzene	106	70-130
1,1,2-Trichloro-1,2,2-Trifluoroethane	92	70-130
1,2-Dichloro-1,1,2,2-tetrafluoroethane	78	70-130
Hexachlorobutadiene	110	70-130
iso-Propyl Alcohol	100	70-130
Methylene chloride	84	70-130
4-Methyl-2-pentanone	152	70-130
Methyl tert butyl ether	97	70-130
p/m-Xylene	95	70-130
o-Xylene	112	70-130
Heptane	105	70-130
n-Hexane	92	70-130
Propylene	88	70-130
Styrene	105	70-130
Tetrachloroethene	105	70-130
Tetrahydrofuran	148	70-130
Toluene	100	70-130
trans-1,2-Dichloroethene	92	70-130
trans-1,3-Dichloropropene	86	70-130
Trichloroethene	104	70-130
Trichlorofluoromethane	77	70-130
Vinyl acetate	90	70-130
Vinyl bromide	88	70-130
Vinyl chloride	82	70-130
Volatile Organic Compounds in Air LCS for sample(s) 03-04 (WG238596-6)		
1,1,1-Trichloroethane	71	70-130
1,1,2,2-Tetrachloroethane	114	70-130
1,1,2-Trichloroethane	103	70-130
1,1-Dichloroethane	114	70-130
1,1-Dichloroethene	119	70-130
1,2,4-Trichlorobenzene	96	70-130
1,2,4-Trimethylbenzene	121	70-130
1,2-Dibromoethane	113	70-130
1,2-Dichlorobenzene	120	70-130
1,2-Dichloroethane	105	70-130
1,2-Dichloropropane	149	70-130
1,3,5-Trimethylbenzene	111	70-130

ALPHA ANALYTICAL LABORATORIES
QUALITY ASSURANCE BATCH SPIKE ANALYSES

Laboratory Job Number: L0605827

Continued

Parameter	% Recovery	QC Criteria
Volatile Organic Compounds in Air LCS for sample(s) 03-04 (WG238596-6)		
1,3-Butadiene	123	70-130
1,3-Dichlorobenzene	115	70-130
1,4-Dichlorobenzene	115	70-130
1,4-Dioxane	121	70-130
2,2,4-Trimethylpentane	128	70-130
2-Butanone	126	70-130
2-Hexanone	119	70-130
3-Chloropropene	98	70-130
4-Ethyltoluene	122	70-130
Acetone	117	70-130
Benzene	118	70-130
Benzyl chloride	129	70-130
Bromodichloromethane	122	70-130
Bromoform	107	70-130
Bromomethane	99	70-130
Carbon disulfide	125	70-130
Carbon tetrachloride	97	70-130
Chlorobenzene	111	70-130
Chloroethane	125	70-130
Chloroform	119	70-130
Chloromethane	122	70-130
cis-1,2-Dichloroethene	122	70-130
cis-1,3-Dichloropropene	119	70-130
Cyclohexane	105	70-130
Dibromochloromethane	108	70-130
Dichlorodifluoromethane	100	70-130
Ethyl Alcohol	121	70-130
Ethyl Acetate	128	70-130
Ethylbenzene	106	70-130
1,1,2-Trichloro-1,2,2-Trifluoroethane	127	70-130
1,2-Dichloro-1,1,2,2-tetrafluoroethane	107	70-130
Hexachlorobutadiene	91	70-130
iso-Propyl Alcohol	115	70-130
Methylene chloride	102	70-130
4-Methyl-2-pentanone	130	70-130
Methyl tert butyl ether	109	70-130
p/m-Xylene	94	70-130
o-Xylene	114	70-130
Heptane	115	70-130
n-Hexane	91	70-130
Propylene	119	70-130
Styrene	106	70-130
Tetrachloroethene	111	70-130
Tetrahydrofuran	106	70-130
Toluene	111	70-130
trans-1,2-Dichloroethene	129	70-130
trans-1,3-Dichloropropene	98	70-130
Trichloroethene	110	70-130

ALPHA ANALYTICAL LABORATORIES
QUALITY ASSURANCE BATCH SPIKE ANALYSES

Laboratory Job Number: L0605827

Continued

Parameter	% Recovery	QC Criteria
Volatile Organic Compounds in Air LCS for sample(s) 03-04 (WG238596-6)		
Trichlorofluoromethane	102	70-130
Vinyl acetate	123	70-130
Vinyl bromide	120	70-130
Vinyl chloride	110	70-130

ALPHA ANALYTICAL LABORATORIES
QUALITY ASSURANCE BATCH BLANK ANALYSIS

Laboratory Job Number: L0605827

PARAMETER	RESULT	UNITS	RDL	REF METHOD	DATE PREP	DATE ANAL	ID
Blank Analysis for sample(s) 01-02 (WG238596-3)							
Volatile Organic Compounds in Air - ug/m3				48 TO-15		0505 17:36	PS
1,1,1-Trichloroethane	ND	ug/m3	2.72				
1,1,2,2-Tetrachloroethane	ND	ug/m3	3.43				
1,1,2-Trichloroethane	ND	ug/m3	2.72				
1,1-Dichloroethane	ND	ug/m3	2.02				
1,1-Dichloroethene	ND	ug/m3	1.98				
1,2,4-Trichlorobenzene	ND	ug/m3	3.71				
1,2,4-Trimethylbenzene	ND	ug/m3	2.46				
1,2-Dibromoethane	ND	ug/m3	3.84				
1,2-Dichlorobenzene	ND	ug/m3	3.00				
1,2-Dichloroethane	ND	ug/m3	2.02				
1,2-Dichloropropane	ND	ug/m3	2.31				
1,3,5-Trimethylbenzene	ND	ug/m3	2.46				
1,3-Butadiene	ND	ug/m3	1.10				
1,3-Dichlorobenzene	ND	ug/m3	3.00				
1,4-Dichlorobenzene	ND	ug/m3	3.00				
1,4-Dioxane	ND	ug/m3	3.60				
2,2,4-Trimethylpentane	ND	ug/m3	2.33				
2-Butanone	ND	ug/m3	1.47				
2-Hexanone	ND	ug/m3	2.05				
3-Chloropropene	ND	ug/m3	1.56				
4-Ethyltoluene	ND	ug/m3	2.46				
Acetone	ND	ug/m3	4.75				
Benzene	ND	ug/m3	1.60				
Benzyl chloride	ND	ug/m3	2.59				
Bromodichloromethane	ND	ug/m3	3.35				
Bromoform	ND	ug/m3	5.16				
Bromomethane	ND	ug/m3	1.94				
Carbon disulfide	ND	ug/m3	1.56				
Carbon tetrachloride	ND	ug/m3	3.14				
Chlorobenzene	ND	ug/m3	2.30				
Chloroethane	ND	ug/m3	1.32				
Chloroform	ND	ug/m3	2.44				
Chloromethane	ND	ug/m3	1.03				
cis-1,2-Dichloroethene	ND	ug/m3	1.98				
cis-1,3-Dichloropropene	ND	ug/m3	2.27				
Cyclohexane	ND	ug/m3	1.72				
Dibromochloromethane	ND	ug/m3	4.26				
Dichlorodifluoromethane	ND	ug/m3	4.94				
Ethyl Alcohol	ND	ug/m3	3.76				
Ethyl Acetate	ND	ug/m3	1.80				
Ethylbenzene	ND	ug/m3	2.17				
1,1,2-Trichloro-1,2,2-Trifluoroethane	ND	ug/m3	3.83				
1,2-Dichloro-1,1,2,2-tetrafluoroethane	ND	ug/m3	3.49				
Hexachlorobutadiene	ND	ug/m3	5.33				

ALPHA ANALYTICAL LABORATORIES
QUALITY ASSURANCE BATCH BLANK ANALYSIS

Laboratory Job Number: L0605827

Continued

PARAMETER	RESULT	UNITS	RDL	REF METHOD	DATE PREP	DATE ANAL	ID
Blank Analysis for sample(s) 01-02 (WG238596-3)							
Volatile Organic Compounds in Air - ug/m3 cont'd				48 TO-15		0505 17:36	PS
iso-Propyl Alcohol	ND	ug/m3	1.23				
Methylene chloride	ND	ug/m3	3.47				
4-Methyl-2-pentanone	ND	ug/m3	2.05				
Methyl tert butyl ether	ND	ug/m3	1.80				
p/m-Xylene	ND	ug/m3	4.34				
o-Xylene	ND	ug/m3	2.17				
Heptane	ND	ug/m3	2.05				
n-Hexane	ND	ug/m3	3.52				
Propylene	ND	ug/m3	1.72				
Styrene	ND	ug/m3	2.13				
Tetrachloroethene	ND	ug/m3	3.39				
Tetrahydrofuran	ND	ug/m3	1.47				
Toluene	ND	ug/m3	1.88				
trans-1,2-Dichloroethene	ND	ug/m3	1.98				
trans-1,3-Dichloropropene	ND	ug/m3	2.27				
Trichloroethene	ND	ug/m3	2.68				
Trichlorofluoromethane	ND	ug/m3	2.81				
Vinyl acetate	ND	ug/m3	1.76				
Vinyl bromide	ND	ug/m3	2.18				
Vinyl chloride	ND	ug/m3	1.28				
Blank Analysis for sample(s) 01-02 (WG238596-3)							
Volatile Organic Compounds in Air - ppbV				48 TO-15		0505 17:36	PS
1,1,1-Trichloroethane	ND	ppbV	0.500				
1,1,2,2-Tetrachloroethane	ND	ppbV	0.500				
1,1,2-Trichloroethane	ND	ppbV	0.500				
1,1-Dichloroethane	ND	ppbV	0.500				
1,1-Dichloroethene	ND	ppbV	0.500				
1,2,4-Trichlorobenzene	ND	ppbV	0.500				
1,2,4-Trimethylbenzene	ND	ppbV	0.500				
1,2-Dibromoethane	ND	ppbV	0.500				
1,2-Dichlorobenzene	ND	ppbV	0.500				
1,2-Dichloroethane	ND	ppbV	0.500				
1,2-Dichloropropane	ND	ppbV	0.500				
1,3,5-Trimethylbenzene	ND	ppbV	0.500				
1,3-Butadiene	ND	ppbV	0.500				
1,3-Dichlorobenzene	ND	ppbV	0.500				
1,4-Dichlorobenzene	ND	ppbV	0.500				
1,4-Dioxane	ND	ppbV	1.00				
2,2,4-Trimethylpentane	ND	ppbV	0.500				
2-Butanone	ND	ppbV	0.500				
2-Hexanone	ND	ppbV	0.500				
3-Chloropropene	ND	ppbV	0.500				
4-Ethyltoluene	ND	ppbV	0.500				
Acetone	ND	ppbV	2.00				
Benzene	ND	ppbV	0.500				

ALPHA ANALYTICAL LABORATORIES
QUALITY ASSURANCE BATCH BLANK ANALYSIS

Laboratory Job Number: L0605827

Continued

PARAMETER	RESULT	UNITS	RDL	REF METHOD	DATE PREP	DATE ANAL	ID
Blank Analysis for sample(s) 01-02 (WG238596-3)							
Volatile Organic Compounds in Air - ppbV cont'd				48 TO-15		0505 17:36	PS
Benzyl chloride	ND	ppbV	0.500				
Bromodichloromethane	ND	ppbV	0.500				
Bromoform	ND	ppbV	0.500				
Bromomethane	ND	ppbV	0.500				
Carbon disulfide	ND	ppbV	0.500				
Carbon tetrachloride	ND	ppbV	0.500				
Chlorobenzene	ND	ppbV	0.500				
Chloroethane	ND	ppbV	0.500				
Chloroform	ND	ppbV	0.500				
Chloromethane	ND	ppbV	0.500				
cis-1,2-Dichloroethene	ND	ppbV	0.500				
cis-1,3-Dichloropropene	ND	ppbV	0.500				
Cyclohexane	ND	ppbV	0.500				
Dibromochloromethane	ND	ppbV	0.500				
Dichlorodifluoromethane	ND	ppbV	1.00				
Ethyl Alcohol	ND	ppbV	2.00				
Ethyl Acetate	ND	ppbV	0.500				
Ethylbenzene	ND	ppbV	0.500				
1,1,2-Trichloro-1,2,2-Trifluoroethane	ND	ppbV	0.500				
1,2-Dichloro-1,1,2,2-tetrafluoroethane	ND	ppbV	0.500				
Hexachlorobutadiene	ND	ppbV	0.500				
iso-Propyl Alcohol	ND	ppbV	0.500				
Methylene chloride	ND	ppbV	1.00				
4-Methyl-2-pentanone	ND	ppbV	0.500				
Methyl tert butyl ether	ND	ppbV	0.500				
p/m-Xylene	ND	ppbV	1.00				
o-Xylene	ND	ppbV	0.500				
Heptane	ND	ppbV	0.500				
n-Hexane	ND	ppbV	1.00				
Propylene	ND	ppbV	1.00				
Styrene	ND	ppbV	0.500				
Tetrachloroethene	ND	ppbV	0.500				
Tetrahydrofuran	ND	ppbV	0.500				
Toluene	ND	ppbV	0.500				
trans-1,2-Dichloroethene	ND	ppbV	0.500				
trans-1,3-Dichloropropene	ND	ppbV	0.500				
Trichloroethene	ND	ppbV	0.500				
Trichlorofluoromethane	ND	ppbV	0.500				
Vinyl acetate	ND	ppbV	0.500				
Vinyl bromide	ND	ppbV	0.500				
Vinyl chloride	ND	ppbV	0.500				
Blank Analysis for sample(s) 05 (WG238596-5)							
Volatile Organic Compounds in Air - ug/m3				48 TO-15		0507 12:32	PS

ALPHA ANALYTICAL LABORATORIES
QUALITY ASSURANCE BATCH BLANK ANALYSIS

Laboratory Job Number: L0605827

Continued

PARAMETER	RESULT	UNITS	RDL	REF METHOD	DATE PREP	DATE ANAL	ID
Blank Analysis for sample(s) 05 (WG238596-5)							
Volatile Organic Compounds in Air - ug/m3 cont'd				48 TO-15		0507 12:32	PS
1,1,1-Trichloroethane	ND	ug/m3	2.72				
1,1,2,2-Tetrachloroethane	ND	ug/m3	3.43				
1,1,2-Trichloroethane	ND	ug/m3	2.72				
1,1-Dichloroethane	ND	ug/m3	2.02				
1,1-Dichloroethene	ND	ug/m3	1.98				
1,2,4-Trichlorobenzene	ND	ug/m3	3.71				
1,2,4-Trimethylbenzene	ND	ug/m3	2.46				
1,2-Dibromoethane	ND	ug/m3	3.84				
1,2-Dichlorobenzene	ND	ug/m3	3.00				
1,2-Dichloroethane	ND	ug/m3	2.02				
1,2-Dichloropropane	ND	ug/m3	2.31				
1,3,5-Trimethylbenzene	ND	ug/m3	2.46				
1,3-Butadiene	ND	ug/m3	1.10				
1,3-Dichlorobenzene	ND	ug/m3	3.00				
1,4-Dichlorobenzene	ND	ug/m3	3.00				
1,4-Dioxane	ND	ug/m3	3.60				
2,2,4-Trimethylpentane	ND	ug/m3	2.33				
2-Butanone	ND	ug/m3	1.47				
2-Hexanone	ND	ug/m3	2.05				
3-Chloropropene	ND	ug/m3	1.56				
4-Ethyltoluene	ND	ug/m3	2.46				
Acetone	ND	ug/m3	4.75				
Benzene	ND	ug/m3	1.60				
Benzyl chloride	ND	ug/m3	2.59				
Bromodichloromethane	ND	ug/m3	3.35				
Bromoform	ND	ug/m3	5.16				
Bromomethane	ND	ug/m3	1.94				
Carbon disulfide	ND	ug/m3	1.56				
Carbon tetrachloride	ND	ug/m3	3.14				
Chlorobenzene	ND	ug/m3	2.30				
Chloroethane	ND	ug/m3	1.32				
Chloroform	ND	ug/m3	2.44				
Chloromethane	ND	ug/m3	1.03				
cis-1,2-Dichloroethene	ND	ug/m3	1.98				
cis-1,3-Dichloropropene	ND	ug/m3	2.27				
Cyclohexane	ND	ug/m3	1.72				
Dibromochloromethane	ND	ug/m3	4.26				
Dichlorodifluoromethane	ND	ug/m3	4.94				
Ethyl Alcohol	ND	ug/m3	3.76				
Ethyl Acetate	ND	ug/m3	1.80				
Ethylbenzene	ND	ug/m3	2.17				
1,1,2-Trichloro-1,2,2-Trifluoroethane	ND	ug/m3	3.83				
1,2-Dichloro-1,1,2,2-tetrafluoroethane	ND	ug/m3	3.49				
Hexachlorobutadiene	ND	ug/m3	5.33				

ALPHA ANALYTICAL LABORATORIES
QUALITY ASSURANCE BATCH BLANK ANALYSIS

Laboratory Job Number: L0605827

Continued

PARAMETER	RESULT	UNITS	RDL	REF METHOD	DATE PREP	DATE ANAL	ID
Blank Analysis for sample(s) 05 (WG238596-5)							
Volatile Organic Compounds in Air - ug/m3 cont'd				48 TO-15		0507 12:32	PS
iso-Propyl Alcohol	ND	ug/m3	1.23				
Methylene chloride	ND	ug/m3	3.47				
4-Methyl-2-pentanone	ND	ug/m3	2.05				
Methyl tert butyl ether	ND	ug/m3	1.80				
p/m-Xylene	ND	ug/m3	4.34				
o-Xylene	ND	ug/m3	2.17				
Heptane	ND	ug/m3	2.05				
n-Hexane	ND	ug/m3	3.52				
Propylene	ND	ug/m3	1.72				
Styrene	ND	ug/m3	2.13				
Tetrachloroethene	ND	ug/m3	3.39				
Tetrahydrofuran	ND	ug/m3	1.47				
Toluene	ND	ug/m3	1.88				
trans-1,2-Dichloroethene	ND	ug/m3	1.98				
trans-1,3-Dichloropropene	ND	ug/m3	2.27				
Trichloroethene	ND	ug/m3	2.68				
Trichlorofluoromethane	ND	ug/m3	2.81				
Vinyl acetate	ND	ug/m3	1.76				
Vinyl bromide	ND	ug/m3	2.18				
Vinyl chloride	ND	ug/m3	1.28				
Blank Analysis for sample(s) 05 (WG238596-5)							
Volatile Organic Compounds in Air - ppbV				48 TO-15		0507 12:32	PS
1,1,1-Trichloroethane	ND	ppbV	0.500				
1,1,2,2-Tetrachloroethane	ND	ppbV	0.500				
1,1,2-Trichloroethane	ND	ppbV	0.500				
1,1-Dichloroethane	ND	ppbV	0.500				
1,1-Dichloroethene	ND	ppbV	0.500				
1,2,4-Trichlorobenzene	ND	ppbV	0.500				
1,2,4-Trimethylbenzene	ND	ppbV	0.500				
1,2-Dibromoethane	ND	ppbV	0.500				
1,2-Dichlorobenzene	ND	ppbV	0.500				
1,2-Dichloroethane	ND	ppbV	0.500				
1,2-Dichloropropane	ND	ppbV	0.500				
1,3,5-Trimethylbenzene	ND	ppbV	0.500				
1,3-Butadiene	ND	ppbV	0.500				
1,3-Dichlorobenzene	ND	ppbV	0.500				
1,4-Dichlorobenzene	ND	ppbV	0.500				
1,4-Dioxane	ND	ppbV	1.00				
2,2,4-Trimethylpentane	ND	ppbV	0.500				
2-Butanone	ND	ppbV	0.500				
2-Hexanone	ND	ppbV	0.500				
3-Chloropropene	ND	ppbV	0.500				
4-Ethyltoluene	ND	ppbV	0.500				
Acetone	ND	ppbV	2.00				
Benzene	ND	ppbV	0.500				

ALPHA ANALYTICAL LABORATORIES
QUALITY ASSURANCE BATCH BLANK ANALYSIS

Laboratory Job Number: L0605827

Continued

PARAMETER	RESULT	UNITS	RDL	REF METHOD	DATE PREP	DATE ANAL	ID
Blank Analysis for sample(s) 05 (WG238596-5)							
Volatile Organic Compounds in Air - ppbV cont'd				48 TO-15		0507 12:32	PS
Benzyl chloride	ND	ppbV	0.500				
Bromodichloromethane	ND	ppbV	0.500				
Bromoform	ND	ppbV	0.500				
Bromomethane	ND	ppbV	0.500				
Carbon disulfide	ND	ppbV	0.500				
Carbon tetrachloride	ND	ppbV	0.500				
Chlorobenzene	ND	ppbV	0.500				
Chloroethane	ND	ppbV	0.500				
Chloroform	ND	ppbV	0.500				
Chloromethane	ND	ppbV	0.500				
cis-1,2-Dichloroethene	ND	ppbV	0.500				
cis-1,3-Dichloropropene	ND	ppbV	0.500				
Cyclohexane	ND	ppbV	0.500				
Dibromochloromethane	ND	ppbV	0.500				
Dichlorodifluoromethane	ND	ppbV	1.00				
Ethyl Alcohol	ND	ppbV	2.00				
Ethyl Acetate	ND	ppbV	0.500				
Ethylbenzene	ND	ppbV	0.500				
1,1,2-Trichloro-1,2,2-Trifluoroethane	ND	ppbV	0.500				
1,2-Dichloro-1,1,2,2-tetrafluoroethane	ND	ppbV	0.500				
Hexachlorobutadiene	ND	ppbV	0.500				
iso-Propyl Alcohol	ND	ppbV	0.500				
Methylene chloride	ND	ppbV	1.00				
4-Methyl-2-pentanone	ND	ppbV	0.500				
Methyl tert butyl ether	ND	ppbV	0.500				
p/m-Xylene	ND	ppbV	1.00				
o-Xylene	ND	ppbV	0.500				
Heptane	ND	ppbV	0.500				
n-Hexane	ND	ppbV	1.00				
Propylene	ND	ppbV	1.00				
Styrene	ND	ppbV	0.500				
Tetrachloroethene	ND	ppbV	0.500				
Tetrahydrofuran	ND	ppbV	0.500				
Toluene	ND	ppbV	0.500				
trans-1,2-Dichloroethene	ND	ppbV	0.500				
trans-1,3-Dichloropropene	ND	ppbV	0.500				
Trichloroethene	ND	ppbV	0.500				
Trichlorofluoromethane	ND	ppbV	0.500				
Vinyl acetate	ND	ppbV	0.500				
Vinyl bromide	ND	ppbV	0.500				
Vinyl chloride	ND	ppbV	0.500				
Blank Analysis for sample(s) 03-04 (WG238596-7)							
Volatile Organic Compounds in Air - ug/m3				48 TO-15		0509 00:48	PS

ALPHA ANALYTICAL LABORATORIES
QUALITY ASSURANCE BATCH BLANK ANALYSIS

Laboratory Job Number: L0605827

Continued

PARAMETER	RESULT	UNITS	RDL	REF METHOD	DATE PREP	DATE ANAL	ID
Blank Analysis for sample(s) 03-04 (WG238596-7)							
Volatile Organic Compounds in Air - ug/m3 cont'd				48 TO-15		0509 00:48	PS
1,1,1-Trichloroethane	ND	ug/m3	2.72				
1,1,2,2-Tetrachloroethane	ND	ug/m3	3.43				
1,1,2-Trichloroethane	ND	ug/m3	2.72				
1,1-Dichloroethane	ND	ug/m3	2.02				
1,1-Dichloroethene	ND	ug/m3	1.98				
1,2,4-Trichlorobenzene	ND	ug/m3	3.71				
1,2,4-Trimethylbenzene	ND	ug/m3	2.46				
1,2-Dibromoethane	ND	ug/m3	3.84				
1,2-Dichlorobenzene	ND	ug/m3	3.00				
1,2-Dichloroethane	ND	ug/m3	2.02				
1,2-Dichloropropane	ND	ug/m3	2.31				
1,3,5-Trimethylbenzene	ND	ug/m3	2.46				
1,3-Butadiene	ND	ug/m3	1.10				
1,3-Dichlorobenzene	ND	ug/m3	3.00				
1,4-Dichlorobenzene	ND	ug/m3	3.00				
1,4-Dioxane	ND	ug/m3	3.60				
2,2,4-Trimethylpentane	ND	ug/m3	2.33				
2-Butanone	ND	ug/m3	1.47				
2-Hexanone	ND	ug/m3	2.05				
3-Chloropropene	ND	ug/m3	1.56				
4-Ethyltoluene	ND	ug/m3	2.46				
Acetone	ND	ug/m3	4.75				
Benzene	ND	ug/m3	1.60				
Benzyl chloride	ND	ug/m3	2.59				
Bromodichloromethane	ND	ug/m3	3.35				
Bromoform	ND	ug/m3	5.16				
Bromomethane	ND	ug/m3	1.94				
Carbon disulfide	ND	ug/m3	1.56				
Carbon tetrachloride	ND	ug/m3	3.14				
Chlorobenzene	ND	ug/m3	2.30				
Chloroethane	ND	ug/m3	1.32				
Chloroform	ND	ug/m3	2.44				
Chloromethane	ND	ug/m3	1.03				
cis-1,2-Dichloroethene	ND	ug/m3	1.98				
cis-1,3-Dichloropropene	ND	ug/m3	2.27				
Cyclohexane	ND	ug/m3	1.72				
Dibromochloromethane	ND	ug/m3	4.26				
Dichlorodifluoromethane	ND	ug/m3	4.94				
Ethyl Alcohol	ND	ug/m3	3.76				
Ethyl Acetate	ND	ug/m3	1.80				
Ethylbenzene	ND	ug/m3	2.17				
1,1,2-Trichloro-1,2,2-Trifluoroethane	ND	ug/m3	3.83				
1,2-Dichloro-1,1,2,2-tetrafluoroethane	ND	ug/m3	3.49				
Hexachlorobutadiene	ND	ug/m3	5.33				

ALPHA ANALYTICAL LABORATORIES
QUALITY ASSURANCE BATCH BLANK ANALYSIS

Laboratory Job Number: L0605827

Continued

PARAMETER	RESULT	UNITS	RDL	REF METHOD	DATE PREP	DATE ANAL	ID
Blank Analysis for sample(s) 03-04 (WG238596-7)							
Volatile Organic Compounds in Air - ug/m3 cont'd				48 TO-15		0509 00:48	PS
iso-Propyl Alcohol	ND	ug/m3	1.23				
Methylene chloride	ND	ug/m3	3.47				
4-Methyl-2-pentanone	ND	ug/m3	2.05				
Methyl tert butyl ether	ND	ug/m3	1.80				
p/m-Xylene	ND	ug/m3	4.34				
o-Xylene	ND	ug/m3	2.17				
Heptane	ND	ug/m3	2.05				
n-Hexane	ND	ug/m3	3.52				
Propylene	ND	ug/m3	1.72				
Styrene	ND	ug/m3	2.13				
Tetrachloroethene	ND	ug/m3	3.39				
Tetrahydrofuran	ND	ug/m3	1.47				
Toluene	ND	ug/m3	1.88				
trans-1,2-Dichloroethene	ND	ug/m3	1.98				
trans-1,3-Dichloropropene	ND	ug/m3	2.27				
Trichloroethene	ND	ug/m3	2.68				
Trichlorofluoromethane	ND	ug/m3	2.81				
Vinyl acetate	ND	ug/m3	1.76				
Vinyl bromide	ND	ug/m3	2.18				
Vinyl chloride	ND	ug/m3	1.28				
Blank Analysis for sample(s) 03-04 (WG238596-7)							
Volatile Organic Compounds in Air - ppbV				48 TO-15		0509 00:48	PS
1,1,1-Trichloroethane	ND	ppbV	0.500				
1,1,2,2-Tetrachloroethane	ND	ppbV	0.500				
1,1,2-Trichloroethane	ND	ppbV	0.500				
1,1-Dichloroethane	ND	ppbV	0.500				
1,1-Dichloroethene	ND	ppbV	0.500				
1,2,4-Trichlorobenzene	ND	ppbV	0.500				
1,2,4-Trimethylbenzene	ND	ppbV	0.500				
1,2-Dibromoethane	ND	ppbV	0.500				
1,2-Dichlorobenzene	ND	ppbV	0.500				
1,2-Dichloroethane	ND	ppbV	0.500				
1,2-Dichloropropane	ND	ppbV	0.500				
1,3,5-Trimethylbenzene	ND	ppbV	0.500				
1,3-Butadiene	ND	ppbV	0.500				
1,3-Dichlorobenzene	ND	ppbV	0.500				
1,4-Dichlorobenzene	ND	ppbV	0.500				
1,4-Dioxane	ND	ppbV	1.00				
2,2,4-Trimethylpentane	ND	ppbV	0.500				
2-Butanone	ND	ppbV	0.500				
2-Hexanone	ND	ppbV	0.500				
3-Chloropropene	ND	ppbV	0.500				
4-Ethyltoluene	ND	ppbV	0.500				
Acetone	ND	ppbV	2.00				
Benzene	ND	ppbV	0.500				

ALPHA ANALYTICAL LABORATORIES
QUALITY ASSURANCE BATCH BLANK ANALYSIS

Laboratory Job Number: L0605827

Continued

PARAMETER	RESULT	UNITS	RDL	REF METHOD	DATE PREP	DATE ANAL	ID
Blank Analysis for sample(s) 03-04 (WG238596-7)							
Volatile Organic Compounds in Air - ppbV cont'd				48 TO-15		0509 00:48	PS
Benzyl chloride	ND	ppbV	0.500				
Bromodichloromethane	ND	ppbV	0.500				
Bromoform	ND	ppbV	0.500				
Bromomethane	ND	ppbV	0.500				
Carbon disulfide	ND	ppbV	0.500				
Carbon tetrachloride	ND	ppbV	0.500				
Chlorobenzene	ND	ppbV	0.500				
Chloroethane	ND	ppbV	0.500				
Chloroform	ND	ppbV	0.500				
Chloromethane	ND	ppbV	0.500				
cis-1,2-Dichloroethene	ND	ppbV	0.500				
cis-1,3-Dichloropropene	ND	ppbV	0.500				
Cyclohexane	ND	ppbV	0.500				
Dibromochloromethane	ND	ppbV	0.500				
Dichlorodifluoromethane	ND	ppbV	1.00				
Ethyl Alcohol	ND	ppbV	2.00				
Ethyl Acetate	ND	ppbV	0.500				
Ethylbenzene	ND	ppbV	0.500				
1,1,2-Trichloro-1,2,2-Trifluoroethane	ND	ppbV	0.500				
1,2-Dichloro-1,1,2,2-tetrafluoroethane	ND	ppbV	0.500				
Hexachlorobutadiene	ND	ppbV	0.500				
iso-Propyl Alcohol	ND	ppbV	0.500				
Methylene chloride	ND	ppbV	1.00				
4-Methyl-2-pentanone	ND	ppbV	0.500				
Methyl tert butyl ether	ND	ppbV	0.500				
p/m-Xylene	ND	ppbV	1.00				
o-Xylene	ND	ppbV	0.500				
Heptane	ND	ppbV	0.500				
n-Hexane	ND	ppbV	1.00				
Propylene	ND	ppbV	1.00				
Styrene	ND	ppbV	0.500				
Tetrachloroethene	ND	ppbV	0.500				
Tetrahydrofuran	ND	ppbV	0.500				
Toluene	ND	ppbV	0.500				
trans-1,2-Dichloroethene	ND	ppbV	0.500				
trans-1,3-Dichloropropene	ND	ppbV	0.500				
Trichloroethene	ND	ppbV	0.500				
Trichlorofluoromethane	ND	ppbV	0.500				
Vinyl acetate	ND	ppbV	0.500				
Vinyl bromide	ND	ppbV	0.500				
Vinyl chloride	ND	ppbV	0.500				

REFERENCES

48. Compendium of Methods for the Determination of Toxic Organic Compounds in Ambient Air. Second Edition. EPA/625/R-96/010b, January 1999.

GLOSSARY OF TERMS AND SYMBOLS

REF	Reference number in which test method may be found.
METHOD	Method number by which analysis was performed.
ID	Initials of the analyst.
ND	Not detected in comparison to the reported detection limit.
NI	Not Ignitable.
ug/cart	Micrograms per Cartridge.

LIMITATION OF LIABILITIES

Alpha Analytical, Inc. performs services with reasonable care and diligence normal to the analytical testing laboratory industry. In the event of an error, the sole and exclusive responsibility of Alpha Analytical, Inc., shall be to re-perform the work at it's own expense. In no event shall Alpha Analytical, Inc. be held liable for any incidental consequential or special damages, including but not limited to, damages in any way connected with the use of, interpretation of, information or analysis provided by Alpha Analytical, Inc.

We strongly urge our clients to comply with EPA protocol regarding sample volume, preservation, cooling, containers, sampling procedures, holding times and splitting of samples in the field.

AIR ANALYSIS

PAGE 1 OF 1

CHAIN OF CUSTODY

Eight Walkup Drive Westborough, MA 01581
TEL: 508-898-9220 FAX: 508-898-9193

Date Rec'd in Lab: 4/28/06

ALPHA Job #: L0605827

Client Information

Client: BETA Group, Inc.
Address: 315 Norwood Park South
Norwood MA 02062
Phone: 781-255-1982 x110
Fax: 781-255-1974
Email: tdowney@beta-inc.com
☐ These samples have been previously analyzed by Alpha

Project Information

Project Name: McCoy Field
Project Location: New Bedford, MA
Project #: 02685
Project Manager: Dave Billo
ALPHA Quote #:

Turn-Around Time

☑ Standard (5 DAYS; TO-13: 10 DAYS) ☐ RUSH (only confirmed if pre-approved!)
Date Due: 5/3/06 Time:

Report Information - Data Deliverables

☐ FAX
☑ ADEx
Criteria Checker: _____
(Default based on Regulatory Criteria Indicated)
Other Formats: _____
☐ EMAIL (standard pdf report)
☐ Additional Deliverables: _____
Report to: (if different than Project Manager) _____

Billing Information

☐ Same as Client info PO #:

Regulatory Requirements/Report Limits

State /Fed	Program	Criteria

Other Project Specific Requirements/Comments:

ANALYSIS

ALPHA Lab ID (Lab Use Only)	Sample ID	Collection Date	Collection Start Time	Collection End Time	Sample Matrix	Samplers Initials	ID Can	ID-Flow Controller	TO-14A	TO-15	APH	DISSOLVED GASES	FIXED GASES	TO-13A	TO-15 SULFIDES/MERCAPTANS	DISS GASES CO2 ONLY			Sample Comments	TOTAL # CONTINERS
5827.1	Gym-2	4/27/06	0819	1219	SV	TMD	323	A014		X										1
2	Gym-2A		0801	1201	A		332	A030		X										1
3	Gym-3A		0800	1200	A		191	A008		X										1
4	And-2A		0829	1229	A		188	A006		X										1
5	Field Blank						187	496		X										1

Attachment E
Wilcox & Barton Letter

Wilcox & Barton, INC.

ENVIRONMENTAL SERVICES

May 19, 2006

Alan Hanscom, P.E., LSP
BETA Group, Inc.
315 Norwood Park South
Norwood, Massachusetts 02062

RE: Review of Sub-Slab Vent Air Data
New Bedford Keith Middle School, New Bedford, Massachusetts
Wilcox & Barton Inc. Project Number BETA0001

Dear Mr. Hanscom:

In response to your request, I have reviewed the above-referenced air data collected from the sub-slab venting system at the new Keith Middle School and provide my comments with respect to the potential health effects associated with detected constituent concentrations.

The results of air samples collected from the roof top vent stacks of the sub-slab ventilation system at the New Keith Middle School are summarized on Table 1. The foundation venting system was designed and installed to provide a preferential pathway for any potential contaminants located beneath the foundation to vent directly to the atmosphere through the roof of the school, minimizing the possibility of migration of vapors into the occupied interior of the school building. Samples were analyzed for polychlorinated biphenyls (PCBs), polycyclic aromatic hydrocarbons (PAHs), and volatile organic compounds (VOCs). Neither PCBs nor PAHs were detected; however, due to limitations in the volume of air that could be recovered from the vents, the analytical reporting limits are higher than the Massachusetts Department of Environmental Protection (MassDEP) Allowable Ambient Limits (AAL) and local outdoor air background concentrations for PCBs. A variety of VOCs were detected; some of which are anticipated to be related to materials used in construction of the venting system and should dissipate with time.

While some VOCs were detected above their MassDEP AALs in the vents, all VOCs are within a factor of ~100 of their AAL or typical ambient air background concentration. Since the vents are passively discharging, a dilution of at least 100 is likely to occur prior to the constituents reaching the ground level breathing zone. Therefore, it is my opinion that these measured concentrations do not represent a potential health threat to people inside or outside the Middle School.

If you have any questions, please call me at (401) 323-9571.

Very truly yours,

WILCOX & BARTON, INC.

Cynthia Fuller
Health Risk Assessor

cc. Dave Billo, LSP; BETA Group, Inc.

TABLE 1
Summary of Sub-slab Vent and Rooftop Ambient Air Sample Results
Keith Middle School
New Bedford, Massachusetts

Constituent	Vent Samples					Rooftop Ambient Samples			TEL [1]	AAL [1]	Typical Outdoor Air Concentration [2]	Ratio of Maximum Detected Vent Concentration to Maximum of AAL/Typical Outdoor Concentration
Sample ID	Gym 2		Gym 3	Aud 2	Building B2	Gym 2A	Gym 3A	Aud-2A				
Date Sampled:	3/30/06	4/27/06	3/30/06	3/31/06	3/31/06	4/27/06	4/27/06	4/27/06	(24-hour Avg)	(Annual Avg)		
Units	(ug/m^3)	(ug/m^3)	(ug/m^3)	(ug/m^3)	(ug/m^3)	(ug/m^3)	(ug/m^3)	(ug/m^3)	(ug/m^3)	(ug/m^3)	(ug/m^3)	
Acetone [3]	**1,140**	**207**	**474**	16.6	**463**	8.93	12.1	24.6	160.54	160.54	NA	7
2-Butanone (Methyl Ethyl Ketone) [3]	**1,010**	**226**	**269**	**58.3**	**423**	**22**	**12.2**	**13**	200	10	1	101
Cyclohexane	17.2 U	17.2 U	19.7	1.72 U	17.2 U	1.72 U	1.72 U	1.72 U	280.82	280.82	NA	0.07
Ethyl Alcohol	37.6 U	37.6 U	37.6 U	3.76 U	37.6 U	12.5	9.14	25	51.24	51.24	NA	ND
Ethylbenzene	21.7 U	21.7 U	21.7 U	3.32	21.7 U	2.17 U	2.17 U	2.17 U	300	300	1	0.01
n-Hexane	35.2 U	35.2 U	50.2	3.52 U	35.2 U	3.52 U	3.52 U	3.52 U	NS	NS	4	13
Isopropyl Alcohol	12.3 U	12.3 U	12.3 U	1.23 U	12.3 U	1.23 U	1.32	6.72	NS	NS	NA	ND
Methyl tertiary-butyl ether	68.5	84.8	238	1.8 U	18 U	1.8 U	1.8 U	1.8 U	NS	NS	NA	NS
Methylene Chloride	**65.2**	34.7 U	34.7 U	3.47 U	34.7 U	**12**	**23.7**	**6.27**	9.45	0.24	1	65
Tetrachloroethene	**84.5**	33.9 U	33.9 U	3.39 U	33.9 U	3.39 U	3.39 U	3.39 U	922.18	0.02	2	42
Tetrahydrofuran [3]	**378**	70.4	**102**	1.47 U	**112**	1.47 U	1.47 U	2.86	160.35	80.18	NA	5
Toluene	18.8 U	**28.7**	18.8 U	**66.1**	43.5	**26.6**	14.5	**21**	80	20	5	3
2,2,4-Trimethylpentane	1,230	63.1	703	2.33 U	24.4	2.33 U	2.33 U	2.33 U	NS	NS	NA	NS
Xylenes	65.1 U	65.1 U	65.1 U	**15.64**	65.1 U	6.51 U	6.51 U	6.51 U	11.8	11.8	10	1
PAHs	17 U	--	19 U	12 U	7.6 U	--	--	--	NS	NS	NA	ND
PCBs [4]	0.067 U	--	0.077 U	0.048 U	0.03 U	--	--	--	0.003	0.0005	0.001	ND

Footnotes at end of table

TABLE 3 (continued)
Summary of Sub-slab Vent and Rooftop Ambient Air Sample Results
Keith Middle School
New Bedford, Massachusetts

Calculation of PCB/PAH Detection Limits

Parameter	Gym 2	Gym 3	Aud 2	Building B2
Flow Rate (liters/minute)	0.5	0.5	0.5	0.5
Start	10:14	10:06	12:47	12:55
Stop	11:14	10:58	14:10	15:07
Time (minutes)	60	52	83	132
Liters (L)	30	26	41.5	66
Cubic meters (m^3)	0.03	0.026	0.0415	0.066
PCB Detection Limit in ng/m^3				
at 5 ng/cartridge	167	192	120	76
at 2 ng/cartridge	67	77	48	30
PAH Detection Limit in ug/m^3				
at 0.5 ug/cartridge	17	19	12	7.6
Stack Volume (L)	47	47	91	131

Only detected constituents are presented.
ug/m^3 = micrograms per cubic meter.
ng/m^3 = nanograms per cubic meter.
U = Not detected at reporting limit presented.
"--" = Not analyzed.
NS = No standard available.
ND = Not detected.
NA = Not available.
Bold typeface = Concentration exceeds AAL.
Bold and shaded = Concentration exceeds TEL.

1. MassDEP (1995). Revised Air Guidelines; memo from Carol Rowan-West; Office of Research and Standards, December 6. (http://www.mass.gov/dep/air/aallist.pdf).
   TEL is Threshold Effects Exposure Limit (24-hour average exposure); AAL is Allowable Ambient Limit (annual average exposure).
2. US EPA (1998). Inside IAQ: A Comparison of Indoor and Outdoor Concentrations of Hazardous Air Pollutants. EPA/600/N-98/002.
   US EPA presents no value for PCBs; value presented is highest PCB concentration detected in recent high school outdoor sampling.
3. Common constituents of PVC pipe cements and cleaners.
4. Reporting limit varied from 2 to 20 ng per cartridge, depending on the PCB congener, with 2 ng and 5 ng most common. Reporting limit presented is for 2 ng/cartridge.

TABLE 2
Summary of Indoor Air Sampling Results by PCB Congener and Homologs
New Bedford High School
New Bedford, Massachusetts

PCB BZ Congener No. [1]	Detected PCB Mass in Sample Cartridge (in ng)								2,3,7,8-TCDD Toxicity Equivalency Factor (TEF) [2]
	IAQ-1	IAQ-2	IAQ-3	Field Blank as IAQ-4	IAQ-5	IAQ-6	BG-1	BG-2	
1	8.3	11	4.5	18	20	24	--	0.64	-
2	1.4	4.4	1.3	4	7.1	4.6	--	--	-
3	4.7	12	4.8	16	17	18	1.1	0.99	-
4/10	43	55	30	200	200	180	7.7	10	-
6	--	42	37	200	220	160	--	10	-
7	--	7.5	5.4	29	32	25	--	--	-
8	160	220	190	900	1,000	770	--	22	-
11	57	88	47	91	--	78	--	--	-
13	--	--	--	78	100	76	--	--	-
15	56	120	150	420	580	380	18	9.6	-
16	91	140	200	650	910	610	23	8.9	-
17	76	130	160	580	790	510	18	18	-
18	170	280	370	1,500	1,800	1,300	25	33	-
19	22	38	34	130	190	110	--	5.5	-
22	--	170	220	530	620	520	--	--	-
23	--	--	--	--	--	20	--	--	-
24	--	--	--	27	--	19	--	--	-
25	59	120	83	140	300	160	--	14	-
26	20	69	110	240	380	260	7.6	15	-
27	16	--	31	97	160	92	--	3.8	-
28	130	210	460	1,200	1,500	1,200	16	22	-
29	--	--	--	--	--	26	--	-	-
31	160	370	540	1,400	1,900	1,300	35	28	-
32	55	100	130	410	600	390	--	13	-
33	110	220	330	1,100	990	1,000	13	8.9	-
34	--	--	--	--	--	37	--	5.6	-
37	--	--	150	230	510	230	--	-	-
40	--	--	44	110	100	110	--	3.2	-
41	--	35	49	85	--	74	--	-	-
42	--	--	65	170	170	140	--	3.3	-
44	--	100	230	570	580	540	--	15	-
45	--	84	65	160	220	160	--	-	-
73/46	--	--	38	68	120	69	--	-	-
47	--	28	56	150	150	140	--	4.6	-
48	44	37	78	200	230	190	6.4	2.5	-
49	34	80	180	500	470	450	22	20	-
51	--	--	25	62	74	57	--	2.3	-
52	91	170	270	640	740	620	37	27	-
53	--	60	73	180	250	180	--	7	-
55	--	--	--	--	--	--	3.6	--	-
56	--	25	52	75	120	100	4.2	3.4	-
59	--	--	57	64	170	60	--	2	-
60	--	--	31	42	72	59	2.4	2	-
68/64	--	86	130	280	370	270	11	7.2	-
66	--	44	110	190	280	240	8.2	7	-
70	--	58	120	200	290	260	8.7	6.7	-
71	--	--	49	130	120	120	--	3.8	-
74	--	28	71	120	160	150	3.6	3.6	-
77	--	--	--	--	--	--	--	*0.63*	*0.0001*
78	9	--	--	-	--	--	--	--	-
80	--	--	7.6	--	--	--	2.5	--	-
82	--	--	6.5	9.7	22	12	1.5	--	-
85	--	4.5	8.7	14	17	17	0.87	0.71	-
95/88	--	58	54	99	120	110	6.1	6.8	-
89/84	10	12	19	29	40	40	2.1	2.2	-
87/111	8.9	9.1	12	21	32	27	--	--	-
101/90	35	52	43	63	97	88	5.9	5.6	-
91	--	7.5	12	22	26	25	1.5	2	-
92	--	8.9	8.2	12	19	16	1.2	1.3	-
93	--	--	1.1	--	--	--	--	--	-
96	--	1.8	2.3	5.2	--	5.3	--	--	-
97	--	9.8	16	25	36	30	2.3	2.4	-
99	--	12	18	26	39	38	2.2	2.9	-
100	--	--	1	--	--	--	--	--	-
102	--	--	4.5	8.5	10	8.6	--	--	-
103	--	3.1	2	4.4	--	2.6	0.78	--	-
105	*3.2*	*4.1*	*4.2*	*7.8*	*14*	*8.4*	*0.76*	*0.71*	*0.0001*
110	19	21	24	36	54	50	3.6	4.5	-
115	--	3.2	--	--	--	--	--	--	-
118	*11*	*13*	*12*	*19*	*32*	*23*	*2.1*	*2.2*	*0.0001*
128	1.4	2.2	--	--	--	--	--	--	-
129/158	1.3	2.9	--	--	--	--	--	--	-
130/164	1.7	3.5	--	--	5.3	--	--	--	-
132	7.3	13	5.4	7.7	13	9.6	1	0.87	-
134	--	--	1.2	--	--	--	--	--	-
135	5	11	4.5	6.4	9.4	8	0.61	0.56	-
136	4.8	10	4.9	7.5	10	11	0.68	0.64	-
137	1	--	--	--	--	--	--	--	-

TABLE 2 (Continued)
Summary of Indoor Air Sampling Results by PCB Congener and Homologs
New Bedford High School
New Bedford, Massachusetts

PCB BZ Congener No. [1]	Detected PCB Mass in Sample Cartridge (in ng)								2,3,7,8-TCDD Toxicity Equivalency Factor (TEF) [2]
	IAQ-1	IAQ-2	IAQ-3	Field Blank as IAQ-4	IAQ-5	IAQ-6	BG-1	BG-2	
138	7.7	17	4.8	8.4	12	9.9	1.2	0.96	-
141	3.5	10	2.9	4.1	7.6	6.4	0.71	0.53	-
144	--	6.2	3.2	3.2	6.2	5.6	--	--	-
146	4.2	6.9	2.3	4	6	4	--	--	-
147/149	26	66	23	31	52	46	3.1	2.8	-
151	12	32	11	16	25	24	1.1	0.87	-
153	19	48	14	21	33	28	2.7	2.1	-
156	***1.1***	***0.66***	--	--	--	--	--	--	***0.0005***
163/160	2.8	6.6	2.1	--	5.2	--	--	--	-
167	***0.78***	***0.73***	--	--	--	--	--	--	***0.00001***
170	0.68	2.4	--	--	--	--	--	--	-
171	0.93	2.3	--	--	--	--	--	--	-
172	--	1.2	--	--	--	--	--	--	-
174	3.6	10	2.7	4	7.8	6	0.55	--	-
176	1.6	4	1.5	--	3.6	3.2	--	--	-
177	1.7	5.1	1.2	--	3.5	2.8	--	--	-
178	1.7	3.9	1.4	2.6	3.7	3.6	--	--	-
179	5.2	15	5	8.4	14	15	0.55	--	-
180	3.2	9.4	2	3.6	6.4	4.2	--	--	-
181	--	--	--	--	--	--	--	--	-
183	3.7	8.7	2.9	3.9	7.8	5.8	--	--	-
185	0.85	2.2	--	--	2.6	--	--	--	-
187	8.7	19	6.1	9.6	18	16	0.86	0.61	-
190	--	0.57	--	--	--	--	--	--	-
196	0.51	0.94	--	--	--	--	--	--	-
198	--	--	--	--	8.7	--	--	--	-
199	0.55	0.79	--	--	--	--	--	--	-
204/200	1	1.3	--	--	--	--	--	--	-
201	1.4	1.7	--	--	--	--	--	--	-
202	2.2	2.4	1.2	--	3.8	4.4	--	--	-
203	0.89	1.2	--	--	--	--	--	--	-
Total PCB Mass [3]	1,642	3,791	5,440	14,729	18,335	14,203	318	391	-
Total TCDD TEqs [4]	***0.0020***	***0.0020***	***0.0016***	***0.0027***	***0.0046***	***0.0031***	***0.0003***	***0.0004***	

Homologs (by weight in ng)	IAQ-1	IAQ-2	IAQ-3	Field Blank as IAQ-4	IAQ-5	IAQ-6	BG-1	BG-2	Average (Excluding Background Samples)
Monochlorobiphenyls	14	27	11	38	44	47	1.1	1.6	30
Dichlorobiphenyls	310	530	460	1,900	2,200	1,700	26	52	1,183
Trichlorobiphenyls	910	1,800	2,800	8,200	11,000	7,800	140	180	5,418
Tetrachlorobiphenyls	180	840	1,800	4,000	4,700	4,000	110	120	2,587
Pentachlorobiphenyls	88	220	250	400	560	500	31	31	336
Hexachlorobiphenyls	99	240	79	110	180	150	11	9.3	143
Heptachlorobiphenyls	32	84	23	32	67	56	2	0.61	49
Octachlorobiphenyls	6.6	8.3	1.2	--	12	4.4	--	--	7
Nonachlorobiphenyls	--	--	--	--	--	--	--	--	--
Decachlorobiphenyls	--	--	--	--	--	--	--	--	--
Total [5]	1,600	3,800	5,400	15,000	18,000	14,000	320	390	

Homologs (by percentage of total)	IAQ-1	IAQ-2	IAQ-3	Field Blank as IAQ-4	IAQ-5	IAQ-6	BG-1	BG-2	Average (Excluding Background Samples)
Monochlorobiphenyls	0.9%	0.7%	0.2%	0.3%	0.2%	0.3%	0.3%	0.4%	0.4%
Dichlorobiphenyls	18.9%	14.1%	8.5%	12.9%	11.7%	11.9%	8.1%	13.2%	13.0%
Trichlorobiphenyls	55.5%	48.0%	51.6%	55.9%	58.6%	54.7%	43.6%	45.6%	54.1%
Tetrachlorobiphenyls	11.0%	22.4%	33.2%	27.2%	25.0%	28.1%	34.3%	30.4%	24.5%
Pentachlorobiphenyls	5.4%	5.9%	4.6%	2.7%	3.0%	3.5%	9.7%	7.9%	4.2%
Hexachlorobiphenyls	6.0%	6.4%	1.5%	0.7%	1.0%	1.1%	3.4%	2.4%	2.8%
Heptachlorobiphenyls	2.0%	2.2%	0.4%	0.2%	0.4%	0.4%	0.6%	0.2%	0.9%
Octachlorobiphenyls	0.4%	0.2%	0.02%	-	0.06%	0.03%	--	--	0.1%
Nonachlorobiphenyls	--	--	--	--	--	--	--	--	--
Decachlorobiphenyls	--	--	--	--	--	--	--	--	--
Total	100%	100%	100%	100%	100%	100%	100%	100%	

"--" No constituent detected.

1. US EPA (2006a). PCB-ID: Table of PCB Congeners and Other Species (http://www.epa.gov/toxteam/pcbid/table.htm).
2. US EPA (2006b). PCB-ID Toxicity Equivalency Factors (http://www.epa.gov/toxteam/pcbid/tefs.htm). Applicable only to 12 PCB congeners, 5 of which were detected in air samples, identified by ***bold italic*** type.
3. Sum of individual congener masses.
4. Equal to sum of (dioxin-like PCB mass x TEF).
5. As reported by the laboratory, as a rounded value.