IMMEDIATE RESPONSE ACTION PLAN MODIFICATION

New Bedford High School
230 Hathaway Boulevard
New Bedford, Massachusetts
Release Tracking Number 4-22409

Prepared for:

City of New Bedford
133 William Street
New Bedford, Massachusetts 02740

Prepared by:

TRC Environmental Corporation
Wannalancit Mills
650 Suffolk Street
Lowell, Massachusetts 01854
(978) 970-5600

February 2012

TABLE OF CONTENTS

1.0 INTRODUCTION 1-1

1.1 Background 1-1
1.2 Licensed Site Professional 1-2
1.3 Person Assuming Responsibility for the Modified IRA 1-2

2.0 DESCRIPTION OF THE RELEASE, SITE CONDITIONS, AND SURROUNDING RECEPTORS 2-1

2.1 Description of the Release 2-1
2.1.1 Seep Impacts in the Mechanical Room 2-1
2.1.2 Groundwater Impacts Beneath the Mechanical Room Floor 2-1
2.1.3 NAPL Impacts Beneath the Mechanical Room Floor 2-1
2.1.4 Potential Infiltration to the Sanitary Sewer 2-2
2.1.5 Potential Infiltration to the Underdrain and Storm Sewer 2-2
2.2 Release Reporting 2-2
2.3 Site Conditions 2-3
2.4 Surrounding Receptors 2-3
2.4.1 Seep Impacts in the Mechanical Room 2-3
2.4.2 Groundwater Impacts near MW-7 and Potential Infiltration to the Sanitary Sewer 2-4

3.0 IRA OBJECTIVES AND MODIFIED IRA PLAN 3-1

3.1 IRA Objectives 3-1
3.2 Original IRA Plan 3-1
3.3 January 2011 IRA Plan Modification 3-2
3.4 November 2011 IRA Plan Modification 3-2

4.0 DESCRIPTION OF MODIFIED IMMEDIATE RESPONSE ACTIONS 4-1

4.1 Groundwater Hydraulic Control System 4-1
4.2 Membrane Interface Probe System (MIPS) Investigation 4-3

5.0 PROPOSED SCHEDULE FOR THE MODIFIED IMMEDIATE RESPONSE ACTIONS 5-1

6.0 REMEDIATION WASTE MANAGEMENT STATEMENT 6-1

7.0 ENVIRONMENTAL MONITORING PLAN 7-1

8.0 FEDERAL, STATE & LOCAL PERMITS 8-1

9.0 SEAL AND SIGNATURE OF THE LICENSED SITE PROFESSIONAL 9-1

10.0 OTHER RELEVANT INFORMATION 10-1

10.1 Public Involvement 10-1

11.0 REFERENCES 11-1

TABLES

Table 1: Summary of Analytical Results for Groundwater Samples (2008 through 2011)
Table 2: Summary of Analytical Results for NAPL Samples (August 2010 through August 2011)
Table 3: Summary of Analytical Results for Absorbent Sock Sample (August 2011)

FIGURES

Figure 1: Site Aerial Photograph
Figure 2: Site Plan with Sampling Locations
Figure 3: Detail of Site Plan in Vicinity of Mechanical Room
Figure 4: Detail of Site Plan with Approximate Underdrain System
Figure 5: Process and Instrumentation Diagram for Hydraulic Control System

APPENDICES

Appendix A: Estimate of Sustainable Pumping Rate
Appendix B: Notification Letters to City of New Bedford Mayor and Board of Health

1.0 INTRODUCTION

TRC Environmental Corporation (TRC) has prepared this Immediate Response Action (IRA) Plan Modification for submittal to the Massachusetts Department of Environmental Protection (MassDEP) on behalf of the City of New Bedford, Massachusetts (the City) through the City's Department of Environmental Stewardship and in accordance with the Massachusetts Contingency Plan (MCP; 310 CMR 40.0000). The original IRA Plan (TRC, 2010a), submitted in March 2010, addressed a Condition of Substantial Release Migration (SRM) at the New Bedford High School (NBHS) campus in New Bedford, Massachusetts, as defined under 310 CMR 40.0006 of the MCP. MassDEP assigned Release Tracking Number (RTN) 4-22409 to the Site. An IRA Plan Modification was submitted in January 2011 to introduce remedial measures targeting separate phase liquid and associated impacted groundwater encountered beneath the NBHS Mechanical Room (B-114). This IRA Plan Modification introduces additional remedial measures targeting the non-aqueous phase liquid (NAPL) and associated impacted groundwater encountered beneath the NBHS Mechanical Room. This modification does not change previously approved IRA activities.

1.1 Background

In December 2009 and January 2010, TRC collected groundwater and aqueous samples near where groundwater appears to seep onto the concrete floor of the Mechanical Room of the NBHS Building. Analytical results for these samples suggested the potential for chlorinated volatile organic compounds (VOCs) to be present in indoor air in the building, representing an SRM and a possible Critical Exposure Pathway (CEP) as defined under 310 CMR 40.0006 of the MCP. Following release reporting to MassDEP, TRC conducted indoor air sampling on an expedited basis from several locations within the building near the groundwater seep and in other areas of the building, including classrooms. TRC's risk assessment of these data indicated that there is no significant risk to the health of building occupants based on MassDEP criteria.

On August 30, 2010, during development of newly installed monitoring well MW-27 in the Mechanical Room of the NBHS Building, TRC personnel observed droplets of NAPL entering the monitoring well. TRC collected a sample of the NAPL and submitted it to Alpha Analytical Laboratories (Alpha) for VOC analysis. The VOC primary component of the NAPL was identified as trichloroethylene (TCE). Investigations conducted subsequent to the discovery of the NAPL defined the nature and extent of this material in groundwater. The January 2011 IRA Plan Modification specified a program of Total Fluid Extraction (TFE) events designed to remove a significant portion of the NAPL from the subsurface beneath the NBHS Mechanical Room.

In August 2011, a vacuum truck containing approximately 609 gallons of water from the July 28, 2011 TFE event was rejected by the disposal facility upon determining that the water contained polychlorinated biphenyls (PCBs), specifically Aroclor 1254. Subsequent testing verified that Aroclor 1254 and lubricating oil were also present in the NAPL located beneath the NBHS Mechanical Room. This modification to the IRA Plan specifies remedial measures to address the NAPL encountered beneath the NBHS Mechanical Room, now recognized to contain significant concentrations of TCE (approximately 25%), Aroclor 1254 (approximately 25%), and lubricating oil (approximately 50%).

The remaining sections of this IRA Plan Modification include: Section 2 (Description of the Release, Site Conditions, and Surrounding Receptors), Section 3 (IRA Objectives and Modified IRA Plan), Section 4 (Description of Modified Immediate Response Actions), Section 5 (Proposed Schedule for the Modified Immediate Response Actions), Section 6 (Remediation Waste Management Statement), Section 7 (Environmental Monitoring Plan), Section 8 (Federal, State, and Local Permits), Section 9 (Seal and Signature of the Licensed Site Professional), Section 10 (Other Relevant Information), and Section 11 (References).

1.2 Licensed Site Professional

The Licensed Site Professional (LSP) overseeing this Modified IRA is:

David M. Sullivan
LSP License Number: 1488
TRC Environmental Corporation
650 Suffolk Street, Lowell, Massachusetts 01854
(978) 656-3565 (Office)

1.3 Person Assuming Responsibility for the Modified IRA

The party undertaking this Modified IRA is:

City of New Bedford
133 William Street, New Bedford, Massachusetts 02740
Contact: Ms. Cheryl Henlin
(508) 991-6188

2.0 DESCRIPTION OF THE RELEASE, SITE CONDITIONS, AND SURROUNDING RECEPTORS

2.1 Description of the Release

Based on the data collection and evaluations described in previous IRA status reports, TRC has prepared the following description of the release condition. Note that some of the potential release conditions identified in the original IRA Plan were investigated and subsequently eliminated. Only the current release conditions are identified below:

2.1.1 Seep Impacts in the Mechanical Room

The Mechanical Room seeps were sampled for VOCs on December 2, 2009, January 7, 2010, and January 30, 2010. As described in the March 2010 IRA Plan, some of the VOC constituents were detected at concentrations greater than MCP Method 1 GW-2 groundwater standards.

Sampling of indoor air in the Mechanical Room confirmed that VOCs detected in the seeps were also present in the indoor air. The detection of chlorinated solvents in groundwater, seep water, and indoor air in the vicinity of the Mechanical Room defined the CEP[1] at the NBHS building.

2.1.2 Groundwater Impacts Beneath the Mechanical Room Floor

Chlorinated VOCs have been detected at concentrations greater than MCP Method 1 GW-2 groundwater standards in groundwater samples from three monitoring wells (MW-27, MW-28, and MW-32) located in the Mechanical Room at the NBHS building. Chlorinated VOCs have not been detected at concentrations greater than MCP Method 1 GW-2 groundwater standards in a deeper monitoring well located adjacent to MW-27 (MW-27D) or in shallow monitoring wells surrounding MW-27 (other than MW-28 and MW-32). Groundwater analytical data from multiple sampling events are summarized in Table 1.

PCBs, primarily Aroclor 1254, have also been detected at concentrations greater than MCP Method 1 GW-2 groundwater standards in groundwater samples from two monitoring wells (MW-27R and MW-28) located in the Mechanical Room at the NBHS building. These data are also summarized in Table 1.

2.1.3 NAPL Impacts Beneath the Mechanical Room Floor

On August 30, 2010, during development of monitoring well MW-27 in the Mechanical Room of the NBHS Building, TRC personnel observed droplets of NAPL entering the monitoring well. During the months following the initial discovery of NAPL, several samples were collected and submitted to an analytical laboratory for analysis. The initial analysis, performed in August 2010 reported that the NAPL contained 220,000 mg/L (approximately 25%) of TCE. Subsequent

[1] Section 40.0006 of the MCP defines a Critical Exposure Pathway (CEP) as a route by which subsurface contamination results in measurable concentrations of indoor air contamination in a school or residence.

analyses, performed in August 2011 reported 246,000 mg/L (approximately 25%) of Aroclor 1254 and 466,000 mg/L (approximately 50%) of petroleum in the range of lubricating oil. These analytical results are shown in Table 2.

2.1.4 Potential Infiltration to the Sanitary Sewer

Groundwater assessment activities during 2010 identified chlorinated VOCs in monitoring well MW-7 at concentrations below MCP Method 1 GW-2 groundwater standards. Chlorinated VOCs have also been detected at concentrations below MCP Method 1 GW-2 groundwater standards in the two sanitary sewer manholes (SS-MH-3 and SS-MH-4) located downgradient from MW-7 at the southern end of the NBHS campus. A comparison of groundwater elevation contours to sewer line elevation data indicates that the sanitary sewer line intersects the groundwater table in the vicinity of manhole SS-MH-3. Both of the manholes where chlorinated VOCs have been detected at concentrations below MCP Method 1 GW-2 groundwater standards are located downgradient from the point where the water table intersects the sewer line.

2.1.5 Potential Infiltration to the Underdrain and Storm Sewer

During high water events, an extensive underdrain system beneath the NBHS building diverts groundwater from beneath NBHS to the perimeter drains and then to the City storm sewer. The configuration of the underdrain system in the vicinity of the Mechanical Room is shown in Figure 4. As shown in this figure, one branch of the drain system is located immediately adjacent to MW-27R (the drain pipe was encountered during well installation). The proximity of this drain to a location of groundwater impacts beneath the Mechanical Room floor represents a potential for impact migration from the vicinity of the Mechanical Room to the City storm sewer.

2.2 Release Reporting

SRM conditions were reported to the MassDEP by the City via telephone with TRC on January 29, 2010 at approximately 11:05 AM. MassDEP orally approved the IRA at the Site, and assigned RTN 4-22409.

The orally-approved IRA consisted of the following:

- Monitoring of indoor air locations, including the Mechanical Room, for VOCs with expedited analysis. Recognizing that indoor air in the Mechanical Room may reflect materials stored in this area, MassDEP suggested that an inventory of chemicals stored at the NBHS building, relocation of indoor chemical sources, and ventilation of the Mechanical Room would be appropriate prior to re-sampling in this area;
- Re-sampling of seeps in the Mechanical Room; and
- Sealing of the floor seeps.

On August 31, 2010, the day after discovery of the separate phase liquid droplets in MW-27, representatives of the City with TRC discussed the matter with representatives of MassDEP

Southeastern region. MassDEP approved further investigation of the nature and extent of the separate phase liquid and any associated groundwater impacts.

On August 18, 2011, several hours after receiving laboratory analytical results confirming the presence of Aroclor 1254 in NAPL captured on a piece of absorbent sock[2], the City with TRC updated the MassDEP and United States Environmental Protection Agency (EPA) Region 1 PCB Coordinator of the status of IRA activities related to the PCB impacts in the vicinity of the Mechanical Room. At that time the City confirmed planned additional investigation activities to determine composition of product detected in monitoring well MW-27R and efforts to determine the extent of the PCB impact.

2.3 Site Conditions

The NBHS campus in New Bedford, Massachusetts occupies approximately 35.4 acres. The NBHS campus is located on the north side of Parker Street between Hathaway Boulevard on the west and Liberty Street on the east, as indicated on Figure 1. NBHS is comprised of a single 529,192 square foot building (with a footprint of 233,903 square feet) surrounded by paved parking areas, lawn and landscaped areas for recreational use, and paved tennis courts. Approximately 48-percent of the NBHS campus is covered by impervious surfaces (e.g., pavement or building).

The NBHS building was constructed between 1970 and 1972 on land that was previously occupied by wetlands and was subject to land disturbance or disposal activity in the 1930s through the 1960s. The building construction includes a network of 6-inch polyvinyl chloride (PVC) sub-slab underdrains (a diagram of this system is contained in the original March 2010 IRA Plan). The underdrains are connected to the NBHS campus storm sewer system, which connects to the City's sanitary sewer system.

2.4 Surrounding Receptors

2.4.1 Seep Impacts in the Mechanical Room

Access to the unoccupied Mechanical Room is secure, but authorized adults can pass through the area while performing maintenance duties inside the Mechanical Room.

The HVAC systems in the Mechanical Room service the B-Block, and create a negative pressure condition in the Mechanical Room that mitigates potential migration of air from the Mechanical Room to other areas of the building. Based on investigations conducted to date, chlorinated VOCs have been detected in indoor air within the Mechanical Room, but they have not been detected in samples collected from adjacent areas (see Figures 1 and 2 for sample locations).

Potential receptors therefore are limited to maintenance workers, including building engineers and custodial staff.

[2] TRC cut a NAPL-stained section from an absorbent sock that had been placed in MW-27R and submitted it to an analytical laboratory for analysis of PCBs. The analytical results are shown in Table 3.

2.4.2 Groundwater Impacts near MW-7 and Potential Infiltration to the Sanitary Sewer

The surrounding receptors for this release area were discussed in the March 2010 IRA Plan (TRC, 2010a).

3.0 IRA OBJECTIVES AND MODIFIED IRA PLAN

The objectives and planned activities under this IRA are summarized below:

3.1 IRA Objectives

The IRA initiated at this site addressed potential SRM conditions at the NBHS building and included the following objectives:

- Characterization of groundwater, seep water, soil vapor, and indoor air;
- Characterization of VOCs in groundwater, storm sewer lines, and sanitary sewer lines; and
- Implementation of mitigation measures in the NBHS building.

3.2 Original IRA Plan

Work performed under the original IRA Plan included:

- Characterization of indoor air;
- Additional characterization of subslab soil vapors;
- Additional characterization of groundwater from new and existing monitoring wells located in and around the NBHS building;
- Additional evaluation of the storm sewer system on the NBHS campus;
- Additional evaluation of the sanitary sewer system on the NBHS campus;
- Additional evaluation of the air handling systems, foundation cracks, floor drains, sink drains and other annular spaces;
- Evaluation of the CEP and implementation of CEP mitigation measures, where warranted;
- Removal of interior sources to evaluate potential contributions to indoor air readings if appropriate; and
- Sealing of drains and cracks.

The above mentioned work is documented in IRA Status Reports submitted to MassDEP in May and November, 2010 (TRC, 2010b and 2010c) and May 2011 (TRC, 2011b).

In addition, TRC oversaw the sealing of seeps in the Mechanical Room floor (initiated during the December 2010 holiday break at NBHS), which was described in the May 2011 IRA Status Report (TRC, 2011b).

3.3 January 2011 IRA Plan Modification

The January 2011 IRA Plan Modification added the removal of chlorinated VOC-impacted groundwater in the vicinity of MW-27 by TFE and off-site disposal to the previously approved IRA activities.

3.4 November 2011 IRA Plan Modification

This IRA Plan Modification adds the following activities to the existing IRA Plan:

- Installation, operation, and maintenance of a hydraulic control system in the vicinity of MW-27R within the NBHS Mechanical Room; and
- Investigation of soil, groundwater, and NAPL contamination in that area using a Membrane Interface Probe System (MIPS).

4.0 DESCRIPTION OF MODIFIED IMMEDIATE RESPONSE ACTIONS

Discovery and characterization of the separate phase liquid beneath the NBHS Mechanical Room was discussed in the November 2011 IRA Status Report (TRC 2011c). Key aspects of this investigation were provided in Section 2.1.

The primary objective of this IRA is to mitigate critical exposure pathways. The ultimate objective is to remove the Aroclor from the environment at this location.

TRC has outlined a three step process to achieve these objectives:

1) Mitigate potential critical exposure pathways by installation of combined hydraulic control and venting system in the vicinity of MW-27R.
2) Define the location of the NAPL as precisely as possible using MIPS. A precise NAPL location map is a necessary step in the development of a permanent remedial strategy.
3) After the NAPL location is defined, develop a NAPL removal/remediation strategy.

The first two steps in this process are the subject of this IRA Plan Modification and are outlined below. The third step will be presented in a separate IRA Plan Modification after the details of that step are fully developed.

4.1 Groundwater Hydraulic Control System

The purpose of the proposed hydraulic control system is to prevent impacted groundwater in the vicinity of 4-inch recovery well MW-27R from entering into the underdrain system that was originally installed beneath the NBHS (see Figure 4). This proposed system is a temporary remedy, designed to control migration of impacted groundwater during periods of high groundwater until a permanent remedy can be implemented. The proposed period of operation is anticipated to be less than one year assuming implementation and completion of a permanent remedy within that timeframe.

The groundwater near MW-27R is known to contain a mix of organic chemical constituents including petroleum, PCBs, and chlorinated VOCs. The proposed system would pump the groundwater in order to maintain a groundwater elevation below the invert of the underdrain system beneath the floor of the Mechanical Room, treat impacted groundwater, then discharge the treated water to the municipal sewer system.

Impacted groundwater is anticipated to be recovered from existing MW-27R installed through the floor of the mechanical room. Remediation system equipment is proposed for installation in the former incinerator pit inside the mechanical room adjacent to the recovery well. The well has a yield in the range of one to two gallons per minute (gpm); however, the remediation system will be designed to accommodate as much as 10 gpm. The design flow rate for the system is based on the attached hydraulic calculations (Appendix A) and would accommodate the installation of a second recovery well (contingency).

A remediation system process and instrumentation diagram is provided in Figure 5. Groundwater will be pumped from the recovery well to a series of two 500-gallon capacity accumulation/ settling tanks. Two tanks are included to provide separation/removal of particulates and non-aqueous phase liquids (NAPL) and to allow break-up of any oil emulsions.

Recovered groundwater will be pumped through a series of two bag filters. Bag filter No. 1 will be equipped with a polypropylene oil absorbing 25-micron filter bag. The intent of this filter is to remove oil to the extent possible to extend the life of the activated carbon and clay media filter systems described herein and provide course filtration of particulates. A 1-micron filter bag will be installed in the second filtration unit to remove fine particulates. The second filter discharges to an organo-clay vessel with 240 pounds of mixed anthracite clay and granular activated carbon. The organo-clay filter media is generally superior to activated carbon at removing oil emulsions, which may be present in the recovered groundwater. The organo-clay vessel will be followed by two carbon vessels, each with 200 pounds of granular activated carbon. Groundwater will be discharged to the City's sanitary sewer system via a floor drain located in the former incinerator pit. A flow totalizer will be provided just prior to the discharge point.

In addition to hydraulic control, localized sub-slab vapor migration from this area will occur via the imparting of vacuum in the subslab soil pore space in the vicinity of the dewatered underdrain system. A vacuum blower will be used to extract vapor from the recovery well. The purpose of vacuum extraction is to increase hydraulic gradient toward the recovery well, remove subsurface vapor-phase impacts to the extent possible and provide localized mitigation of vapor-phase migration into the building. The blower will discharge through an existing unused exhaust stack to the outside air. A 200-lb vapor phase carbon vessel will be installed immediately downstream of the blower to remove organic contaminants from the exhaust stream.

The hydraulic control system is expected to operate only during periods of high water table, expected to be six months out of each year. Effluent samples may be collected on days 1, 3, 5 and 7, followed by weekly samples until week 4, then monthly samples during system operation; a precise sampling schedule will be developed through discussions with regulators and/or New Bedford's wastewater treatment facility. Effluent samples will be submitted to an analytical laboratory for analysis of VOCs and PCBs.

System inspections will be performed on the same schedule as effluent sample collection. In addition, an autodialer will be installed to provide remote notification to the system operator of unexpected system shutdowns.

The localized venting system is expected to operate continuously until a permanent remedy is implemented. Emission samples may be collected week 1, week 2, week 4, then monthly during system operation; a precise sampling schedule will be developed through discussions with regulators.

4.2 Membrane Interface Probe System (MIPS) Investigation

A Membrane Interface Probe System (MIPS) will be utilized to define the lateral and vertical extent of NAPL and groundwater impacts beneath the Mechanical Room floor.

The membrane interface probe is combined with GeoProbe® direct push equipment to enable continuous impact screening as the probe proceeds down a borehole. The Membrane Interface Probe (MIP) is a percussion tolerant VOC sensor that can continuously log volatile organics that diffuse through a semipermeable membrane. Using a carrier gas, the VOCs are brought to the surface through tubing, which is connected to a laboratory grade photoionization detector (PID), flame ionization detector (FID), and electron capture detector (ECD) for immediate screening. All three detectors are mounted in a gas chromatograph unit. As the operator advances the MIP sensor into the subsurface, a log is displayed real time on the field computer. This log provides information about total volatiles contamination using the PID, ECD or FID or any combination of detectors. The real time log also provides a depth/speed graph, electrical log of the formation, and temperature log of the heated sensor onscreen.

Running MIPS logs on a grid or targeted pattern across the investigation area will provide a three-dimensional view of volatile contaminant distribution and lithology. The data will be imported into interpolation software, which allows construction of cross sections from the MIP and electrical conductivity logs.

The MIPS log provides semi quantitative/qualitative information on contaminant levels and helps selected targeted samples from contaminated zones to define specific analytes and precise concentrations. MIPS does not have the capability to sense Aroclor per se, but it is well suited to identifying and quantifying the presence of TCE in the subsurface. A fundamental assumption for this investigation is that the Aroclor impacts are co-located with the MIPS-detectable chlorinated VOC DNAPL.

TRC plans to perform initial MIPS borings in a 2-1/2 foot grid including locations within approximately 8 feet of MW-27R, unless prohibited by subgrade or overhead obstructions. The borings will be extended to a depth of 12 feet below the floor, based on the change in strata that occurs at about 11 feet and the relative absence of contamination detected in the 12 to 17 foot interval. After reviewing the MIPS data, additional borings may be performed beyond the initial grid until the horizontal and vertical extent of the NAPL have been defined.

5.0 PROPOSED SCHEDULE FOR THE MODIFIED IMMEDIATE RESPONSE ACTIONS

Activities to be completed under this IRA Plan Modification include: installation, operation, and maintenance of a hydraulic control system in the vicinity of MW-27R within the NBHS Mechanical Room, and investigation of soil, groundwater, and NAPL contamination in that area using MIPS.

Installation of the hydraulic control system is expected to be implemented in late January 2011 or early February 2012 (assuming MassDEP and EPA concurrence is received). The MIPS investigation is expected to be conducted no later than April 2012. Operation and maintenance-related sampling (i.e., effluent and emission) will be conducted frequently during the first month of operation, then monthly or quarterly thereafter. TRC will notify MassDEP in advance of subsequent system startup.

6.0 REMEDIATION WASTE MANAGEMENT STATEMENT

Groundwater extracted under this IRA Plan Modification will be treated, then discharged to the City's sanitary sewer system. The remedial wastewater will be managed in a manner that is consistent with 310 CMR 40.0041, General Provisions for the Management of Remedial Wastewater and/or Remedial Additives; 310 CMR 40.0043: Remedial Wastewater Discharges to Publicly Owned Treatment Works (POTW); and 310 CMR 40.0047, Reporting Requirements for Discharges of Remedial Wastewater and Remedial Additives.

Vapors collected by the system will be treated, then discharged via a nearby vent. The treated emissions will be managed in a manner consistent with: 310 CMR 40.0049, Remedial Air Emissions.

In both instances, the remedial wastes will be managed in a manner that is consistent with 310 CMR 40.0031: General Provisions for the Management of Remediation Waste. Specifically, TRC will ensure the following:

- Remediation Waste will be managed in a manner that ensures the protection of health, safety, public welfare and the environment and is in compliance with the provisions of 310 CMR 40.0030 and all other applicable federal, state, and local laws, regulations, and bylaws.

- The Remediation Waste will be consigned, conveyed and/or transported only to facilities and locations licensed, permitted, or approved to accept such materials by appropriate federal, state or local authorities.

- Remediation Wastes that meet the criteria defining a listed hazardous waste or which are themselves a characteristic hazardous waste will be accumulated, treated, and stored or otherwise managed at the disposal site in a manner that achieves a level of control and protection equivalent to that provided by the technical and management requirements of 310 CMR 30.000, the "Massachusetts Hazardous Waste Regulations".

7.0 ENVIRONMENTAL MONITORING PLAN

This IRA Plan does not anticipate any environmental monitoring activities other than those associated with operation and maintenance of the proposed hydraulic control system and further characterization of the release at this disposal site. These monitoring activities are specified in the site-specific Site Health and Safety Plan.

8.0 FEDERAL, STATE & LOCAL PERMITS

Implementation of the proposed hydraulic control system will require a permit to discharge to the City Sewage Treatment System. The proposed system will be submitted for review by the EPA Region 1 PCB Coordinator; however there is no permit associated with this process.

There are no other known Federal, State, or local permit requirements associated with the IRA activities anticipated under this Modified IRA Plan.

Massachusetts Dig-Safe® will be notified at least 72 hours prior to commencing the drilling activities related to the MIPS investigation.

9.0 SEAL AND SIGNATURE OF THE LICENSED SITE PROFESSIONAL

Pursuant to 310 CMR 40.0424(1)(i), this Modified IRA Plan was prepared by:

David M. Sullivan, LSP, CHMM
TRC Environmental Corporation
Licensed Site Professional No. 1488

2/22/2012
Date

Stamp

10.0 OTHER RELEVANT INFORMATION

10.1 Public Involvement

As required by 310 CMR 40.1403(3)(b), the Mayor and the Board of Health for the City have been notified of the IRA activities undertaken to mitigate a CEP. Copies of the notification letters sent to the Mayor and Board of Health are provided in Appendix B.

Additional notification will be provided to NBHS administrators and, if necessary, to students and staff of NBHS as required by 310 CMR 40.1403(11).

A twenty-day public comment period will be held for this report prior to submission to MassDEP.

This site is part of a larger site that is involved in a proactive public communication process. As such, the status of IRA activities will be discussed periodically in public meetings and fact sheets will be prepared as needed.

11.0 REFERENCES

TRC, 2010a *Immediate Response Action Plan, New Bedford High School Substantial Release Migration / Critical Exposure Pathway, 230 Hathaway Boulevard, New Bedford, Massachusetts.* Prepared for: City of New Bedford Department of Environmental Stewardship. Prepared by: TRC Environmental Corporation. March 2010.

TRC, 2010b *Immediate Response Action Status Report - New Bedford High School Substantial Release Migration / Critical Exposure Pathway, 230 Hathaway Boulevard, New Bedford, Massachusetts.* Prepared for: City of New Bedford Department of Environmental Stewardship. Prepared by: TRC Environmental Corporation. May, 2010.

TRC, 2010c *Immediate Response Action Status Report - New Bedford High School Substantial Release Migration / Critical Exposure Pathway, 230 Hathaway Boulevard, New Bedford, Massachusetts.* Prepared for: City of New Bedford Department of Environmental Stewardship. Prepared by: TRC Environmental Corporation. November, 2010.

TRC, 2011a *Immediate Response Action Plan Modification - New Bedford High School, 230 Hathaway Boulevard, New Bedford, Massachusetts.* Prepared for: City of New Bedford Department of Environmental Stewardship. Prepared by: TRC Environmental Corporation. November, 2011.

TRC, 2011b *Immediate Response Action Status Report - New Bedford High School Substantial Release Migration / Critical Exposure Pathway, 230 Hathaway Boulevard, New Bedford, Massachusetts.* Prepared for: City of New Bedford Department of Environmental Stewardship. Prepared by: TRC Environmental Corporation. May, 2011.

TRC, 2011c *Immediate Response Action Status Report - New Bedford High School Substantial Release Migration / Critical Exposure Pathway, 230 Hathaway Boulevard, New Bedford, Massachusetts.* Prepared for: City of New Bedford Department of Environmental Stewardship. Prepared by: TRC Environmental Corporation. November, 2011.

TABLES

Table 1
Summary of Analytical Results for Groundwater Samples
(2008 through 2011)
New Bedford High School
New Bedford, Massachusetts

Analysis	Analyte		Sample ID:	CLEAN OUT	MW-4						MW-5									
			Sample Date:	4/28/2011	8/19/2008	8/19/2008	1/6/2010	2/17/2010	4/9/2010	9/13/2010	8/19/2008	1/6/2010	1/6/2010	2/17/2010	4/8/2010	9/10/2010	3/8/2011	4/11/2011	4/29/2011	8/24/2011
		GW-2	GW-3			Field Dup							Field Dup								
VOCs																					
	1,1-Dichloroethane	1,000	20,000	1.0 U	NA	NA	1.0 U	1.0 U	1.0 U	1.0 U	NA	1.0 U	1.0 U	1.0 U	1.0 U	1.0 U	1.0 U	1.0 U	1.0 U	1.0 U
	Tetrachloroethylene	50	30,000	1.0 U	NA	NA	1.0 U	1.0 U	1.0 U	1.0 U	NA	1.0 U	1.0 U	1.0 U	1.0 U	1.0 U	1.0 U	1.0 U	1.0 U	1.0 U
	Chlorobenzene	200	1,000	1.0 U	NA	NA	1.0 U	1.0 U	1.0 U	1.0 U	NA	1.0 U	1.0 U	1.0 U	1.0 U	1.0 U	1.0 U	1.0 U	1.0 U	1.0 U
	1,1,1-Trichloroethane	4,000	20,000	1.0 U	NA	NA	1.0 U	1.0 U	1.0 U	1.0 U	NA	1.0 U	1.0 U	1.0 U	1.0 U	1.0 U	1.0 U	1.0 U	1.0 U	1.0 U
	Benzene	2,000	10,000	1.0 U	NA	NA	1.0 U	1.0 U	1.0 U	1.0 U	NA	1.0 U	1.0 U	1.0 U	1.0 U	1.0 U	1.0 U	1.0 U	1.0 U	0.50 U
	Vinyl Chloride	2	50,000	1.0 U	NA	NA	2.0 U	1.0 U	1.0 U	1.0 U	NA	2.0 U	2.0 U	1.0 U	1.0 U	1.0 U	1.0 U	1.0 U	1.0 U	1.0 U
	trans-1,2-Dichloroethylene	90	50,000	1.0 U	NA	NA	1.0 U	1.0 U	1.0 U	1.0 U	NA	1.0 U	1.0 U	1.0 U	1.0 U	1.0 U	1.0 U	1.0 U	1.0 U	1.0 U
	Trichloroethylene	30	5,000	1.0 U	NA	NA	1.0 U	1.0 U	1.0 U	1.0 U	NA	1.0 U	1.0 U	1.0 U	1.0 U	1.0 U	**2.8**	**2.1**	**4.4**	1.0 U
	1,2-Dichlorobenzene	2,000	2,000	1.0 U	NA	NA	1.0 U	1.0 U	1.0 U	1.0 U	NA	1.0 U	1.0 U	1.0 U	1.0 U	1.0 U	1.0 U	1.0 U	1.0 U	1.0 U
	1,3-Dichlorobenzene	2,000	50,000	1.0 U	NA	NA	1.0 U	1.0 U	1.0 U	1.0 U	NA	1.0 U	1.0 U	1.0 U	1.0 U	1.0 U	1.0 U	1.0 U	1.0 U	1.0 U
	1,4-Dichlorobenzene	200	8,000	1.0 U	NA	NA	1.0 U	1.0 U	1.0 U	1.0 U	NA	1.0 U	1.0 U	1.0 U	1.0 U	1.0 U	1.0 U	1.0 U	1.0 U	1.0 U
	cis-1,2-Dichloroethylene	100	50,000	1.0 U	NA	NA	1.0 U	1.0 U	1.0 U	1.0 U	NA	**3.7**	**4.1**	**5.9**	**3.2**	**7.1**	**3.8**	**4.0**	**5.1**	**3.1**
	p-Isopropyltoluene (p-Cymene)	7,000(1)	50,000(1)	2.0 U	NA	NA	1.0 U	2.0 U	2.0 U	2.0 U	NA	1.0 U	1.0 U	2.0 U	2.0 U	2.0 U	2.0 U	2.0 U	2.0 U	2.0 U
	1,2,4-Trichlorobenzene	2,000	50,000	2.0 U	NA	NA	1.0 U	2.0 U	2.0 U	2.0 U	NA	1.0 U	1.0 U	2.0 U	2.0 U	2.0 U	2.0 U	2.0 U	2.0 U	2.0 U
PAHs																				
(ug/L)	Phenanthrene	NS	10,000	NA	0.05 U	0.05 U	NA	NA	NA	NA	**0.18**	NA	NA	NA	NA	NA	NA	NA	NA	NA
PCBs																				
(ug/L)	Aroclor 1242	5	10	NA	0.0500 U	0.0500 U	NA	NA	NA	NA	0.0500 U	NA	NA	NA	NA	NA	NA	NA	NA	0.0521 U
	Aroclor 1248	5	10	NA	0.0500 U	0.0500 U	NA	NA	NA	NA	0.0500 U	NA	NA	NA	NA	NA	NA	NA	NA	**0.129**
	Aroclor 1254	5	10	NA	0.0500 U	0.0500 U	NA	NA	NA	NA	**0.0731 J**	NA	NA	NA	NA	NA	NA	NA	NA	0.0521 U
	Total PCBs	5	10	NA	0.0500 U	0.0500 U	NA	NA	NA	NA	**0.0731 J**	NA	NA	NA	NA	NA	NA	NA	NA	**0.129**
Metals, total																				
(ug/L)	Arsenic	NS	900	NA	**7.0**	5.0 U	NA	NA	NA	NA	**15.0**	NA	NA	NA	NA	NA	NA	NA	NA	NA
	Barium	NS	50,000	NA	50 U	50 U	NA	NA	NA	NA	**122**	NA	NA	NA	NA	NA	NA	NA	NA	NA
	Chromium	NS	300	NA	5.0 U	5.0 U	NA	NA	NA	NA	**52.0**	NA	NA	NA	NA	NA	NA	NA	NA	NA
	Lead	NS	10	NA	7.5 U	7.5 U	NA	NA	NA	NA	**19.2**	NA	NA	NA	NA	NA	NA	NA	NA	NA
	Nickel	NS	200	NA	5.0 U	5.0 U	NA	NA	NA	NA	**20.0**	NA	NA	NA	NA	NA	NA	NA	NA	NA
	Silver	NS	7	NA	3.0 U	3.0 U	NA	NA	NA	NA	**5.0**	NA	NA	NA	NA	NA	NA	NA	NA	NA
	Thallium	NS	3,000	NA	1.0 U	1.0 U	NA	NA	NA	NA	1.0 U	NA	NA	NA	NA	NA	NA	NA	NA	NA
	Zinc	NS	900	NA	**12.0**	**16.0**	NA	NA	NA	NA	**68.0**	NA	NA	NA	NA	NA	NA	NA	NA	NA
Metals, dissolved																				
(ug/L)	Arsenic	NS	900	NA	10 U	10 U	NA	NA	NA	NA	**10**	NA	NA	NA	NA	NA	NA	NA	NA	NA
	Barium	NS	50,000	NA	50 U	50 U	NA	NA	NA	NA	**64.9**	NA	NA	NA	NA	NA	NA	NA	NA	NA
	Nickel	NS	200	NA	5.0 U	5.0 U	NA	NA	NA	NA	5.0 U	NA	NA	NA	NA	NA	NA	NA	NA	NA
	Silver	NS	7	NA	2.5 U	2.5 U	NA	NA	NA	NA	2.5 U	NA	NA	NA	NA	NA	NA	NA	NA	NA
	Zinc	NS	900	NA	**11**	**119**	NA	NA	NA	NA	**10**	NA	NA	NA	NA	NA	NA	NA	NA	NA
General Chemistry																				
(ug/L)	Nitrogen, Nitrate	NS	NS	NA	NA	NA	NA	NA	NA	NA	NA	NA	NA	NA	NA	100 U	NA	NA	NA	NA
	Sulfate	NS	NS	NA	NA	NA	NA	NA	NA	NA	NA	NA	NA	NA	NA	10,000 U	NA	NA	NA	NA
	Total Organic Carbon	NS	NS	NA	NA	NA	NA	NA	NA	NA	NA	NA	NA	NA	NA	**6,800**	NA	NA	NA	NA

Notes:
ug/L - micrograms per liter.
B - Compound detected in associated method blank
J - Estimated value.
NA - Sample not analyzed for the listed analyte.
NS - No MassDEP standards exist for this compound.
U - Compound was not detected at specified quantitation limit.
Values in **Bold** indicate the compound was detected.
Values shown in Bold and shaded type exceed one or more of the listed MassDEP Method 1 standards.
VOCs - Volatile Organic Compounds.
PAHs - Polynuclear Aromatic Hydrocarbons.
PCBs - Polychlorinated Biphenyls.
(1) - MassDEP Method 1 standards for C9-C10 aromatic hydrocarbons used.
(2) - MassDEP Method 1 standards for 1,3-Dichloropropene used.

Table 1
Summary of Analytical Results for Groundwater Samples
(2008 through 2011)
New Bedford High School
New Bedford, Massachusetts

Analysis	Analyte		Sample ID:	MW-5D				MW-6			MW-7							MW-7D		MW-8A
			Sample Date:	9/10/2010	4/8/2011	4/28/2011	8/24/2011	8/19/2008	1/7/2010	2/18/2010	9/16/2008	1/7/2010	2/17/2010	2/17/2010	4/7/2010	9/9/2010	10/22/2010	9/9/2010	9/9/2010	2/18/2010
		GW-2	GW-3											Field Dup					Field Dup	
VOCs																				
	1,1-Dichloroethane	1,000	20,000	1.0 U	1.0 U	1.0 U	1.0 U	NA	1.0 U	1.0 U	NA	1.0 U	1.0 U	1.0 U	1.0 U	1.0 U	1.0 U	**3.9**	**2.9**	1.0 U
	Tetrachloroethylene	50	30,000	1.0 U	1.0 U	1.0 U	1.0 U	NA	1.0 U	1.0 U	NA	**63**	**60**	**64**	**64**	**25**	**26**	**1.3**	1.0 U	1.0 U
	Chlorobenzene	200	1,000	1.0 U	1.0 U	1.0 U	1.0 U	NA	1.0 U	1.0 U	NA	1.0 U	1.0 U	1.0 U	1.0 U	1.0 U	1.0 U	1.0 U	1.0 U	1.0 U
	1,1,1-Trichloroethane	4,000	20,000	1.0 U	1.0 U	1.0 U	1.0 U	NA	1.0 U	1.0 U	NA	1.0 U	1.0 U	1.0 U	1.0 U	1.0 U	1.0 U	**3.9**	**2.7**	1.0 U
	Benzene	2,000	10,000	1.0 U	1.0 U	1.0 U	0.50 U	NA	1.0 U	1.0 U	NA	1.0 U	1.0 U	1.0 U	1.0 U	1.0 U	1.0 U	1.0 U	1.0 U	1.0 U
	Vinyl Chloride	2	50,000	1.0 U	1.0 U	1.0 U	1.0 U	NA	2.0 U	1.0 U	NA	**3.4**	**9.2**	**9.9**	**1.6**	**1.4**	**3.7**	1.0 U	1.0 U	1.0 U
	trans-1,2-Dichloroethylene	90	50,000	1.0 U	1.0 U	1.0 U	1.0 U	NA	1.0 U	1.0 U	NA	1.0 U	1.0 U	1.0 U	1.0 U	1.0 U	1.0 U	1.0 U	1.0 U	1.0 U
	Trichloroethylene	30	5,000	**1.1**	**3.4**	**3.5**	**31**	NA	1.0 U	1.0 U	NA	**6.8**	**5.8**	**6.5**	**4.5**	**14**	1.0 U	**13**	**10**	1.0 U
	1,2-Dichlorobenzene	2,000	2,000	1.0 U	1.0 U	1.0 U	1.0 U	NA	1.0 U	1.0 U	NA	1.0 U	1.0 U	1.0 U	1.0 U	1.0 U	1.0 U	1.0 U	1.0 U	1.0 U
	1,3-Dichlorobenzene	2,000	50,000	1.0 U	1.0 U	1.0 U	1.0 U	NA	1.0 U	1.0 U	NA	1.0 U	1.0 U	1.0 U	1.0 U	1.0 U	1.0 U	1.0 U	1.0 U	1.0 U
	1,4-Dichlorobenzene	200	8,000	1.0 U	1.0 U	1.0 U	1.0 U	NA	1.0 U	1.0 U	NA	1.0 U	1.0 U	1.0 U	1.0 U	1.0 U	1.0 U	1.0 U	1.0 U	1.0 U
	cis-1,2-Dichloroethylene	100	50,000	1.0 U	1.0 U	1.0 U	**6.3**	NA	1.0 U	1.0 U	NA	**20**	**30**	**30**	**9.6**	**47**	**49**	**2.2**	**1.8**	1.0 U
	p-Isopropyltoluene (p-Cymene)	7,000(1)	50,000(1)	2.0 U	2.0 U	2.0 U	2.0 U	NA	1.0 U	2.0 U	NA	1.0 U	2.0 U	2.0 U	2.0 U	2.0 U	2.0 U	2.0 U	2.0 U	2.0 U
	1,2,4-Trichlorobenzene	2,000	50,000	2.0 U	2.0 U	2.0 U	2.0 U	NA	1.0 U	2.0 U	NA	1.0 U	2.0 U	2.0 U	2.0 U	2.0 U	2.0 U	2.0 U	2.0 U	2.0 U
PAHs																				
(ug/L)	Phenanthrene	NS	10,000	NA	NA	NA	NA	**0.09**	NA	NA	5.0 U	NA	NA	NA	NA	NA	NA	NA	NA	NA
PCBs																				
(ug/L)	Aroclor 1242	5	10	NA	NA	NA	0.0500 U	0.0500 U	NA	NA	0.0500 U	NA	NA	NA	NA	NA	NA	NA	NA	NA
	Aroclor 1248	5	10	NA	NA	NA	0.0500 U	0.0500 U	NA	NA	0.0500 U	NA	NA	NA	NA	NA	NA	NA	NA	NA
	Aroclor 1254	5	10	NA	NA	NA	0.0500 U	0.0500 U	NA	NA	0.0500 U	NA	NA	NA	NA	NA	NA	NA	NA	NA
	Total PCBs	5	10	NA	NA	NA	0.0500 U	0.0500 U	NA	NA	0.0500 U	NA	NA	NA	NA	NA	NA	NA	NA	NA
Metals, total																				
(ug/L)	Arsenic	NS	900	NA	NA	NA	NA	**13.0**	NA	NA	2.0 U	NA	NA	NA	NA	NA	NA	NA	NA	NA
	Barium	NS	50,000	NA	NA	NA	NA	50 U	NA	NA	**254**	NA	NA	NA	NA	NA	NA	NA	NA	NA
	Chromium	NS	300	NA	NA	NA	NA	5.0 U	NA	NA	50 U	NA	NA	NA	NA	NA	NA	NA	NA	NA
	Lead	NS	10	NA	NA	NA	NA	7.5 U	NA	NA	5.0 U	NA	NA	NA	NA	NA	NA	NA	NA	NA
	Nickel	NS	200	NA	NA	NA	NA	5.0 U	NA	NA	**29.4**	NA	NA	NA	NA	NA	NA	NA	NA	NA
	Silver	NS	7	NA	NA	NA	NA	**3.0**	NA	NA	2.5 U	NA	NA	NA	NA	NA	NA	NA	NA	NA
	Thallium	NS	3,000	NA	NA	NA	NA	1.0 U	NA	NA	1.0 U	NA	NA	NA	NA	NA	NA	NA	NA	NA
	Zinc	NS	900	NA	NA	NA	NA	**110**	NA	NA	**894**	NA	NA	NA	NA	NA	NA	NA	NA	NA
Metals, dissolved																				
(ug/L)	Arsenic	NS	900	NA	NA	NA	NA	**10**	NA	NA	**2.41**	NA	NA	NA	NA	NA	NA	NA	NA	NA
	Barium	NS	50,000	NA	NA	NA	NA	50 U	NA	NA	250 U	NA	NA	NA	NA	NA	NA	NA	NA	NA
	Nickel	NS	200	NA	NA	NA	NA	5.0 U	NA	NA	**27.7**	NA	NA	NA	NA	NA	NA	NA	NA	NA
	Silver	NS	7	NA	NA	NA	NA	**2.6**	NA	NA	2.5 U	NA	NA	NA	NA	NA	NA	NA	NA	NA
	Zinc	NS	900	NA	NA	NA	NA	10 U	NA	NA	**870**	NA	NA	NA	NA	NA	NA	NA	NA	NA
General Chemistry																				
(ug/L)	Nitrogen, Nitrate	NS	NS	**280**	NA	NA	NA	NA	NA	NA	NA	NA	NA	NA	NA	100 U	NA	100 U	100 U	NA
	Sulfate	NS	NS	**10,000**	NA	NA	NA	NA	NA	NA	NA	NA	NA	NA	NA	**25,000**	NA	**20,000**	**20,000**	NA
	Total Organic Carbon	NS	NS	**2,900**	NA	NA	NA	NA	NA	NA	NA	NA	NA	NA	NA	**7,400**	NA	**6,100**	**6,100**	NA

Notes:
ug/L - micrograms per liter.
B - Compound detected in associated method blank
J - Estimated value.
NA - Sample not analyzed for the listed analyte.
NS - No MassDEP standards exist for this compound.
U - Compound was not detected at specified quantitation limit.
Values in **Bold** indicate the compound was detected.
Values shown in Bold and shaded type exceed one or more of the listed MassDEP Method 1 standards.
VOCs - Volatile Organic Compounds.
PAHs - Polynuclear Aromatic Hydrocarbons.
PCBs - Polychlorinated Biphenyls.
(1) - MassDEP Method 1 standards for C9-C10 aromatic hydrocarbons used.
(2) - MassDEP Method 1 standards for 1,3-Dichloropropene used.

Table 1
Summary of Analytical Results for Groundwater Samples
(2008 through 2011)
New Bedford High School
New Bedford, Massachusetts

Analysis	Analyte		Sample ID:	MW-8B	MW-11			MW-12	MW-13	MW-14	MW-15	MW-16		MW-17	MW-18				MW-19
			Sample Date:	9/16/2008	2/19/2010	4/7/2010	9/13/2010	2/18/2010	2/19/2010	2/19/2010	2/18/2010	2/19/2010	4/28/2011	2/18/2010	2/18/2010	4/9/2010	9/13/2010	4/28/2011	2/18/2010
		GW-2	GW-3																
VOCs																			
	1,1-Dichloroethane	1,000	20,000	NA	1.0 U	1.0 U	1.0 U	1.0 U	1.0 U	1.0 U	1.0 U	1.0 U	1.0 U	1.0 U	1.0 U	1.0 U	1.0 U	1.0 U	1.0 U
	Tetrachloroethylene	50	30,000	NA	1.0 U	1.0 U	1.0 U	1.0 U	1.0 U	1.0 U	1.0 U	1.0 U	1.0 U	1.0 U	1.0 U	1.0 U	1.0 U	1.0 U	1.0 U
	Chlorobenzene	200	1,000	NA	1.0 U	1.0 U	1.0 U	1.0 U	1.0 U	1.0 U	1.0 U	1.0 U	1.0 U	1.0 U	1.0 U	1.0 U	1.0 U	1.0 U	1.0 U
	1,1,1-Trichloroethane	4,000	20,000	NA	1.0 U	1.0 U	1.0 U	1.0 U	1.0 U	1.0 U	1.0 U	1.0 U	1.0 U	1.0 U	1.0 U	1.0 U	1.0 U	1.0 U	1.0 U
	Benzene	2,000	10,000	NA	1.0 U	1.0 U	1.0 U	1.0 U	1.0 U	1.0 U	1.0 U	1.0 U	1.0 U	1.0 U	1.0 U	1.0 U	1.0 U	1.0 U	1.0 U
	Vinyl Chloride	2	50,000	NA	1.0 U	1.0 U	1.0 U	1.0 U	1.0 U	1.0 U	1.0 U	1.0 U	1.0 U	1.0 U	1.0 U	1.0 U	1.0 U	1.0 U	1.0 U
	trans-1,2-Dichloroethylene	90	50,000	NA	1.0 U	1.0 U	1.0 U	1.0 U	1.0 U	1.0 U	1.0 U	1.0 U	1.0 U	1.0 U	1.0 U	1.0 U	1.0 U	1.0 U	1.0 U
	Trichloroethylene	30	5,000	NA	1.0 U	1.0 U	1.0 U	1.0 U	1.0 U	1.0 U	1.0 U	1.0 U	1.0 U	1.0 U	1.0 U	1.0 U	1.0 U	1.0 U	1.0 U
	1,2-Dichlorobenzene	2,000	2,000	NA	1.0 U	1.0 U	1.0 U	1.0 U	1.0 U	1.0 U	1.0 U	1.0 U	1.0 U	1.0 U	1.0 U	1.0 U	1.0 U	1.0 U	1.0 U
	1,3-Dichlorobenzene	2,000	50,000	NA	1.0 U	1.0 U	1.0 U	1.0 U	1.0 U	1.0 U	1.0 U	1.0 U	1.0 U	1.0 U	1.0 U	1.0 U	1.0 U	1.0 U	1.0 U
	1,4-Dichlorobenzene	200	8,000	NA	1.0 U	1.0 U	1.0 U	1.0 U	1.0 U	1.0 U	1.0 U	1.0 U	1.0 U	1.0 U	1.0 U	1.0 U	1.0 U	1.0 U	1.0 U
	cis-1,2-Dichloroethylene	100	50,000	NA	1.0 U	1.0 U	1.0 U	1.0 U	1.0 U	1.0 U	1.0 U	1.0 U	1.0 U	1.0 U	1.0 U	1.0 U	1.0 U	1.0 U	1.0 U
	p-Isopropyltoluene (p-Cymene)	7,000(1)	50,000(1)	NA	2.0 U	2.0 U	2.0 U	2.0 U	2.0 U	2.0 U	2.0 U	2.0 U	2.0 U	2.0 U	2.0 U	2.0 U	2.0 U	2.0 U	2.0 U
	1,2,4-Trichlorobenzene	2,000	50,000	NA	2.0 U	2.0 U	2.0 U	2.0 U	2.0 U	2.0 U	2.0 U	2.0 U	2.0 U	2.0 U	2.0 U	2.0 U	2.0 U	2.0 U	2.0 U
PAHs																			
(ug/L)	Phenanthrene	NS	10,000	5.0 U	NA	NA	NA	NA	NA	NA	NA	NA	NA	NA	NA	NA	NA	NA	NA
PCBs																			
(ug/L)	Aroclor 1242	5	10	0.0500 U	NA	NA	NA	NA	NA	NA	NA	NA	NA	NA	NA	NA	NA	NA	NA
	Aroclor 1248	5	10	0.0500 U	NA	NA	NA	NA	NA	NA	NA	NA	NA	NA	NA	NA	NA	NA	NA
	Aroclor 1254	5	10	0.0500 U	NA	NA	NA	NA	NA	NA	NA	NA	NA	NA	NA	NA	NA	NA	NA
	Total PCBs	5	10	0.0500 U	NA	NA	NA	NA	NA	NA	NA	NA	NA	NA	NA	NA	NA	NA	NA
Metals, total																			
(ug/L)	Arsenic	NS	900	2.0 U	NA	NA	NA	NA	NA	NA	NA	NA	NA	NA	NA	NA	NA	NA	NA
	Barium	NS	50,000	250 U	NA	NA	NA	NA	NA	NA	NA	NA	NA	NA	NA	NA	NA	NA	NA
	Chromium	NS	300	50 U	NA	NA	NA	NA	NA	NA	NA	NA	NA	NA	NA	NA	NA	NA	NA
	Lead	NS	10	5.0 U	NA	NA	NA	NA	NA	NA	NA	NA	NA	NA	NA	NA	NA	NA	NA
	Nickel	NS	200	25 U	NA	NA	NA	NA	NA	NA	NA	NA	NA	NA	NA	NA	NA	NA	NA
	Silver	NS	7	2.5 U	NA	NA	NA	NA	NA	NA	NA	NA	NA	NA	NA	NA	NA	NA	NA
	Thallium	NS	3,000	**1.29**	NA	NA	NA	NA	NA	NA	NA	NA	NA	NA	NA	NA	NA	NA	NA
	Zinc	NS	900	100 U	NA	NA	NA	NA	NA	NA	NA	NA	NA	NA	NA	NA	NA	NA	NA
Metals, dissolved																			
(ug/L)	Arsenic	NS	900	2.0 U	NA	NA	NA	NA	NA	NA	NA	NA	NA	NA	NA	NA	NA	NA	NA
	Barium	NS	50,000	250 U	NA	NA	NA	NA	NA	NA	NA	NA	NA	NA	NA	NA	NA	NA	NA
	Nickel	NS	200	25 U	NA	NA	NA	NA	NA	NA	NA	NA	NA	NA	NA	NA	NA	NA	NA
	Silver	NS	7	2.5 U	NA	NA	NA	NA	NA	NA	NA	NA	NA	NA	NA	NA	NA	NA	NA
	Zinc	NS	900	100 U	NA	NA	NA	NA	NA	NA	NA	NA	NA	NA	NA	NA	NA	NA	NA
General Chemistry																			
(ug/L)	Nitrogen, Nitrate	NS	NS	NA	NA	NA	NA	NA	NA	NA	NA	NA	NA	NA	NA	NA	NA	NA	NA
	Sulfate	NS	NS	NA	NA	NA	NA	NA	NA	NA	NA	NA	NA	NA	NA	NA	NA	NA	NA
	Total Organic Carbon	NS	NS	NA	NA	NA	NA	NA	NA	NA	NA	NA	NA	NA	NA	NA	NA	NA	NA

Notes:
ug/L - micrograms per liter.
B - Compound detected in associated method blank
J - Estimated value.
NA - Sample not analyzed for the listed analyte.
NS - No MassDEP standards exist for this compound.
U - Compound was not detected at specified quantitation limit.
Values in **Bold** indicate the compound was detected.
Values shown in Bold and shaded type exceed one or more of the listed MassDEP Method 1 standards.
VOCs - Volatile Organic Compounds.
PAHs - Polynuclear Aromatic Hydrocarbons.
PCBs - Polychlorinated Biphenyls.
(1) - MassDEP Method 1 standards for C9-C10 aromatic hydrocarbons used.
(2) - MassDEP Method 1 standards for 1,3-Dichloropropene used.

Table 1
Summary of Analytical Results for Groundwater Samples
(2008 through 2011)
New Bedford High School
New Bedford, Massachusetts

Analysis	Analyte		Sample ID:	MW-20		MW-21		MW-22			MW-23		MW-24				MW-25	MW-26	MW-27	
			Sample Date:	4/8/2010	9/10/2010	4/8/2010	9/13/2010	4/8/2010	4/8/2010	9/13/2010	4/8/2010	9/13/2010	4/8/2010	9/10/2010	10/21/2010	10/21/2010	9/8/2010	9/8/2010	9/9/2010	10/21/2010
		GW-2	GW-3						Field Dup							Field Dup				
VOCs																				
	1,1-Dichloroethane	1,000	20,000	1.0 U	1.0 U	1.0 U	1.0 U	1.0 U	1.0 U	1.0 U	1.0 U	1.0 U	1.0 U	1.0 U	1.0 U	1.0 U	1.0 U	1.0 U	400 U	100 U
	Tetrachloroethylene	50	30,000	1.0 U	1.0 U	1.0 U	1.0 U	1.0 U	1.0 U	1.0 U	1.0 U	1.0 U	1.0 U	1.0 U	1.0 U	1.0 U	1.0 U	1.0 U	400 U	100 U
	Chlorobenzene	200	1,000	1.0 U	1.0 U	1.0 U	1.0 U	1.0 U	1.0 U	1.0 U	1.0 U	1.0 U	1.0 U	1.0 U	1.0 U	1.0 U	1.0 U	1.0 U	400 U	100 U
	1,1,1-Trichloroethane	4,000	20,000	1.0 U	1.0 U	1.0 U	1.0 U	1.0 U	1.0 U	1.0 U	1.0 U	1.0 U	1.0 U	1.0 U	1.0 U	1.0 U	1.0 U	1.0 U	400 U	100 U
	Benzene	2,000	10,000	1.0 U	1.0 U	1.0 U	1.0 U	1.0 U	1.0 U	1.0 U	1.0 U	1.0 U	1.0 U	1.0 U	1.0 U	1.0 U	1.0 U	1.0 U	400 U	100 U
	Vinyl Chloride	2	50,000	1.0 U	1.0 U	1.0 U	1.0 U	1.0 U	1.0 U	1.0 U	1.0 U	1.0 U	**4.8**	**1.5**	**1.2**	**1.2**	1.0 U	1.0 U	**550.0**	**10.3 J**
	trans-1,2-Dichloroethylene	90	50,000	1.0 U	1.0 U	1.0 U	1.0 U	1.0 U	1.0 U	1.0 U	1.0 U	1.0 U	1.0 U	1.0 U	1.0 U	1.0 U	1.0 U	1.0 U	**700**	**26.5 J**
	Trichloroethylene	30	5,000	**1.5**	1.0 U	1.0 U	1.0 U	1.0 U	1.0 U	1.0 U	1.0 U	1.0 U	1.0 U	1.0 U	1.0 U	1.0 U	1.0 U	1.0 U	**31,000**	**4,500**
	1,2-Dichlorobenzene	2,000	2,000	1.0 U	1.0 U	1.0 U	1.0 U	1.0 U	1.0 U	1.0 U	1.0 U	1.0 U	1.0 U	1.0 U	1.0 U	1.0 U	1.0 U	1.0 U	400 U	100 U
	1,3-Dichlorobenzene	2,000	50,000	1.0 U	1.0 U	1.0 U	1.0 U	1.0 U	1.0 U	1.0 U	1.0 U	1.0 U	1.0 U	1.0 U	1.0 U	1.0 U	1.0 U	1.0 U	400 U	100 U
	1,4-Dichlorobenzene	200	8,000	1.0 U	1.0 U	1.0 U	1.0 U	1.0 U	1.0 U	1.0 U	1.0 U	1.0 U	1.0 U	1.0 U	1.0 U	1.0 U	1.0 U	1.0 U	400 U	100 U
	cis-1,2-Dichloroethylene	100	50,000	**1.5**	**1.8**	1.0 U	1.0 U	1.0 U	1.0 U	1.0 U	1.0 U	1.0 U	**1.8**	1.0 U	1.0 U	1.0 U	1.0 U	1.0 U	**4,100**	**290**
	p-Isopropyltoluene (p-Cymene)	7,000(1)	50,000(1)	2.0 U	2.0 U	2.0 U	2.0 U	**6.2**	**6.2**	2.0 U	2.0 U	2.0 U	2.0 U	2.0 U	2.0 U	2.0 U	2.0 U	2.0 U	800 U	200 U
	1,2,4-Trichlorobenzene	2,000	50,000	2.0 U	2.0 U	2.0 U	2.0 U	2.0 U	2.0 U	2.0 U	2.0 U	2.0 U	2.0 U	2.0 U	2.0 U	2.0 U	2.0 U	2.0 U	800 U	200 U
PAHs																				
(ug/L)	Phenanthrene	NS	10,000	NA	NA	NA	NA	NA	NA	NA	NA	NA	NA	NA	NA	NA	NA	NA	NA	NA
PCBs																				
(ug/L)	Aroclor 1242	5	10	NA	NA	NA	NA	NA	NA	NA	NA	NA	NA	NA	NA	NA	NA	NA	NA	NA
	Aroclor 1248	5	10	NA	NA	NA	NA	NA	NA	NA	NA	NA	NA	NA	NA	NA	NA	NA	NA	NA
	Aroclor 1254	5	10	NA	NA	NA	NA	NA	NA	NA	NA	NA	NA	NA	NA	NA	NA	NA	NA	NA
	Total PCBs	5	10	NA	NA	NA	NA	NA	NA	NA	NA	NA	NA	NA	NA	NA	NA	NA	NA	NA
Metals, total																				
(ug/L)	Arsenic	NS	900	NA	NA	NA	NA	NA	NA	NA	NA	NA	NA	NA	NA	NA	NA	NA	NA	NA
	Barium	NS	50,000	NA	NA	NA	NA	NA	NA	NA	NA	NA	NA	NA	NA	NA	NA	NA	NA	NA
	Chromium	NS	300	NA	NA	NA	NA	NA	NA	NA	NA	NA	NA	NA	NA	NA	NA	NA	NA	NA
	Lead	NS	10	NA	NA	NA	NA	NA	NA	NA	NA	NA	NA	NA	NA	NA	NA	NA	NA	NA
	Nickel	NS	200	NA	NA	NA	NA	NA	NA	NA	NA	NA	NA	NA	NA	NA	NA	NA	NA	NA
	Silver	NS	7	NA	NA	NA	NA	NA	NA	NA	NA	NA	NA	NA	NA	NA	NA	NA	NA	NA
	Thallium	NS	3,000	NA	NA	NA	NA	NA	NA	NA	NA	NA	NA	NA	NA	NA	NA	NA	NA	NA
	Zinc	NS	900	NA	NA	NA	NA	NA	NA	NA	NA	NA	NA	NA	NA	NA	NA	NA	NA	NA
Metals, dissolved																				
(ug/L)	Arsenic	NS	900	NA	NA	NA	NA	NA	NA	NA	NA	NA	NA	NA	NA	NA	NA	NA	NA	NA
	Barium	NS	50,000	NA	NA	NA	NA	NA	NA	NA	NA	NA	NA	NA	NA	NA	NA	NA	NA	NA
	Nickel	NS	200	NA	NA	NA	NA	NA	NA	NA	NA	NA	NA	NA	NA	NA	NA	NA	NA	NA
	Silver	NS	7	NA	NA	NA	NA	NA	NA	NA	NA	NA	NA	NA	NA	NA	NA	NA	NA	NA
	Zinc	NS	900	NA	NA	NA	NA	NA	NA	NA	NA	NA	NA	NA	NA	NA	NA	NA	NA	NA
General Chemistry																				
(ug/L)	Nitrogen, Nitrate	NS	NS	NA	NA	NA	NA	NA	NA	NA	NA	NA	NA	NA	NA	NA	NA	NA	**1,000**	NA
	Sulfate	NS	NS	NA	NA	NA	NA	NA	NA	NA	NA	NA	NA	NA	NA	NA	NA	NA	**21,000**	NA
	Total Organic Carbon	NS	NS	NA	NA	NA	NA	NA	NA	NA	NA	NA	NA	NA	NA	NA	NA	NA	**8,700**	NA

Notes:
ug/L - micrograms per liter.
B - Compound detected in associated method blank
J - Estimated value.
NA - Sample not analyzed for the listed analyte.
NS - No MassDEP standards exist for this compound.
U - Compound was not detected at specified quantitation limit.
Values in **Bold** indicate the compound was detected.
Values shown in Bold and shaded type exceed one or more of the listed MassDEP Method 1 standards.
VOCs - Volatile Organic Compounds.
PAHs - Polynuclear Aromatic Hydrocarbons.
PCBs - Polychlorinated Biphenyls.
(1) - MassDEP Method 1 standards for C9-C10 aromatic hydrocarbons used.
(2) - MassDEP Method 1 standards for 1,3-Dichloropropene used.

Table 1
Summary of Analytical Results for Groundwater Samples
(2008 through 2011)
New Bedford High School
New Bedford, Massachusetts

Analysis	Analyte		Sample ID:	MW-27D								MW-27R									
			Sample Date:	11/18/2010	3/8/2011	3/25/2011	4/8/2011	4/29/2011	4/29/2011	7/27/2011	8/25/2011	3/8/2011	3/8/2011	3/25/2011	4/8/2011	4/29/2011	7/27/2011	7/27/2011	8/2/2011	8/25/2011	8/25/2011
		GW-2	GW-3						Field Dup				Field Dup					Field Dup			Field Dup
VOCs																					
	1,1-Dichloroethane	1,000	20,000	1.0 U	1.0 U	1.0 U	1.0 U	1.0 U	1.0 U	1.0 U	1.0 U	2,000 U	2,000 U	2,000 U	1,000 U	500 U	200 U	100 U	250 U	200 U	200 U
	Tetrachloroethylene	50	30,000	1.0 U	1.0 U	1.0 U	1.0 U	1.0 U	1.0 U	1.0 U	1.0 U	2,000 U	2,000 U	2,000 U	1,000 U	500 U	200 U	100 U	250 U	200 U	200 U
	Chlorobenzene	200	1,000	1.0 U	1.0 U	1.0 U	1.0 U	1.0 U	1.0 U	1.0 U	1.0 U	2,000 U	2,000 U	2,000 U	1,000 U	500 U	200 U	100 U	250 U	200 U	200 U
	1,1,1-Trichloroethane	4,000	20,000	1.0 U	1.0 U	1.0 U	1.0 U	1.0 U	1.0 U	1.0 U	1.0 U	2,000 U	2,000 U	2,000 U	1,000 U	500 U	200 U	100 U	250 U	200 U	200 U
	Benzene	2,000	10,000	1.0 U	1.0 U	1.0 U	1.0 U	1.0 U	1.0 U	0.50 U	0.50 U	2,000 U	2,000 U	2,000 U	1,000 U	500 U	100 U	50 U	120 U	100 U	100 U
	Vinyl Chloride	2	50,000	1.0 U	1.0 U	1.0 U	1.0 U	1.0 U	1.0 U	**35**	**9.8**	2,000 U	2,000 U	2,000 U	1,000 U	500 U	**1,900**	**1,300**	**510**	**1,000**	**990**
	trans-1,2-Dichloroethylene	90	50,000	1.0 U	1.0 U	1.0 U	1.0 U	1.0 U	1.0 U	**7.5**	**2.2**	**2,500**	**2,500**	**2,600**	**1,900**	**1,400**	**2,200**	**1,700**	**940**	**1,700**	**1,700**
	Trichloroethylene	30	5,000	1.0 U	**1.4**	**0.71 J**	**1.7**	**3.8**	**3.8**	**15**	**4.8**	**210,000**	**180,000**	**410,000**	**130,000**	**38,000**	**16,000**	**13,000**	**23,000**	**27,000**	**28,000**
	1,2-Dichlorobenzene	2,000	2,000	1.0 U	1.0 U	1.0 U	1.0 U	1.0 U	1.0 U	1.0 U	1.0 U	2,000 U	2,000 U	2,000 U	1,000 U	500 U	200 U	100 U	250 U	200 U	200 U
	1,3-Dichlorobenzene	2,000	50,000	1.0 U	1.0 U	1.0 U	1.0 U	1.0 U	1.0 U	1.0 U	1.0 U	2,000 U	2,000 U	2,000 U	1,000 U	500 U	200 U	100 U	250 U	200 U	200 U
	1,4-Dichlorobenzene	200	8,000	1.0 U	1.0 U	1.0 U	1.0 U	1.0 U	1.0 U	**3.0**	**1.3**	2,000 U	2,000 U	2,000 U	1,000 U	500 U	200 U	100 U	250 U	200 U	200 U
	cis-1,2-Dichloroethylene	100	50,000	1.0 U	1.0 U	1.0 U	1.0 U	1.0 U	1.0 U	**45**	**12**	**11,000**	**12,000**	**9,500**	**7,400**	**4,600**	**14,000**	**11,000**	**5,400**	**22,000**	**22,000**
	p-Isopropyltoluene (p-Cymene)	7,000(1)	50,000(1)	2.0 U	2.0 U	2.0 U	2.0 U	2.0 U	2.0 U	2.0 U	2.0 U	4,000 U	4,000 U	4,000 U	2,000 U	1,000 U	400 U	200 U	500 U	400 U	400 U
	1,2,4-Trichlorobenzene	2,000	50,000	2.0 U	2.0 U	2.0 U	2.0 U	2.0 U	2.0 U	2.0 U	2.0 U	4,000 U	4,000 U	4,000 U	2,000 U	1,000 U	400 U	200 U	500 U	400 U	400 U
PAHs																					
(ug/L)	Phenanthrene	NS	10,000	NA	NA	NA	NA	NA	NA	NA	NA	NA	NA	NA	NA	NA	NA	NA	NA	NA	NA
PCBs																					
(ug/L)	Aroclor 1242	5	10	NA	NA	NA	NA	NA	NA	NA	0.150 U	NA	NA	NA	NA	NA	NA	NA	NA	**7.62**	**7.52**
	Aroclor 1248	5	10	NA	NA	NA	NA	NA	NA	NA	**0.358**	NA	NA	NA	NA	NA	NA	NA	NA	2.50 U	3.00 U
	Aroclor 1254	5	10	NA	NA	NA	NA	NA	NA	NA	**1.20**	NA	NA	NA	NA	NA	NA	NA	NA	**30.0**	**33.80**
	Total PCBs	5	10	NA	NA	NA	NA	NA	NA	NA	**1.558**	NA	NA	NA	NA	NA	NA	NA	NA	**37.62**	**41.32**
Metals, total																					
(ug/L)	Arsenic	NS	900	NA	NA	NA	NA	NA	NA	NA	NA	NA	NA	NA	NA	NA	NA	NA	NA	NA	NA
	Barium	NS	50,000	NA	NA	NA	NA	NA	NA	NA	NA	NA	NA	NA	NA	NA	NA	NA	NA	NA	NA
	Chromium	NS	300	NA	NA	NA	NA	NA	NA	NA	NA	NA	NA	NA	NA	NA	NA	NA	NA	NA	NA
	Lead	NS	10	NA	NA	NA	NA	NA	NA	NA	NA	NA	NA	NA	NA	NA	NA	NA	NA	NA	NA
	Nickel	NS	200	NA	NA	NA	NA	NA	NA	NA	NA	NA	NA	NA	NA	NA	NA	NA	NA	NA	NA
	Silver	NS	7	NA	NA	NA	NA	NA	NA	NA	NA	NA	NA	NA	NA	NA	NA	NA	NA	NA	NA
	Thallium	NS	3,000	NA	NA	NA	NA	NA	NA	NA	NA	NA	NA	NA	NA	NA	NA	NA	NA	NA	NA
	Zinc	NS	900	NA	NA	NA	NA	NA	NA	NA	NA	NA	NA	NA	NA	NA	NA	NA	NA	NA	NA
Metals, dissolved																					
(ug/L)	Arsenic	NS	900	NA	NA	NA	NA	NA	NA	NA	NA	NA	NA	NA	NA	NA	NA	NA	NA	NA	NA
	Barium	NS	50,000	NA	NA	NA	NA	NA	NA	NA	NA	NA	NA	NA	NA	NA	NA	NA	NA	NA	NA
	Nickel	NS	200	NA	NA	NA	NA	NA	NA	NA	NA	NA	NA	NA	NA	NA	NA	NA	NA	NA	NA
	Silver	NS	7	NA	NA	NA	NA	NA	NA	NA	NA	NA	NA	NA	NA	NA	NA	NA	NA	NA	NA
	Zinc	NS	900	NA	NA	NA	NA	NA	NA	NA	NA	NA	NA	NA	NA	NA	NA	NA	NA	NA	NA
General Chemistry																					
(ug/L)	Nitrogen, Nitrate	NS	NS	NA	NA	NA	NA	NA	NA	NA	NA	NA	NA	NA	NA	NA	NA	NA	NA	NA	NA
	Sulfate	NS	NS	NA	NA	NA	NA	NA	NA	NA	NA	NA	NA	NA	NA	NA	NA	NA	NA	NA	NA
	Total Organic Carbon	NS	NS	NA	NA	NA	NA	NA	NA	NA	NA	NA	NA	NA	NA	NA	NA	NA	NA	NA	NA

Notes:
ug/L - micrograms per liter.
B - Compound detected in associated method blank
J - Estimated value.
NA - Sample not analyzed for the listed analyte.
NS - No MassDEP standards exist for this compound.
U - Compound was not detected at specified quantitation limit.
Values in **Bold** indicate the compound was detected.
Values shown in Bold and shaded type exceed one or more of the listed MassDEP Method 1 standards.
VOCs - Volatile Organic Compounds.
PAHs - Polynuclear Aromatic Hydrocarbons.
PCBs - Polychlorinated Biphenyls.
(1) - MassDEP Method 1 standards for C9-C10 aromatic hydrocarbons used.
(2) - MassDEP Method 1 standards for 1,3-Dichloropropene used.

Table 1
Summary of Analytical Results for Groundwater Samples
(2008 through 2011)
New Bedford High School
New Bedford, Massachusetts

Analysis	Analyte		Sample ID:	MW-28									MW-29	MW-30	MW-31			
			Sample Date:	9/9/2010	10/21/2010	3/8/2011	3/25/2011	4/11/2011	4/28/2011	7/27/2011	8/2/2011	8/25/2011	9/10/2010	10/22/2010	10/21/2010	3/8/2011	4/11/2011	8/24/2011
		GW-2	GW-3															
VOCs																		
	1,1-Dichloroethane	1,000	20,000	1.0 U	1.0 U	1.0 U	2.5 U	1.0 U	5.0 U	1.0 U	2.5 U	1.0 U	1.0 U	1.0 U	1.0 U	1.0 U	1.0 U	1.0 U
	Tetrachloroethylene	50	30,000	1.0 U	1.0 U	1.0 U	2.5 U	1.0 U	5.0 U	1.0 U	2.5 U	1.0 U	1.0 U	1.0 U	1.0 U	1.0 U	1.0 U	1.0 U
	Chlorobenzene	200	1,000	**38**	**8.5**	1.0 U	2.5 U	1.0 U	5.0 U	**28**	**39**	**35**	1.0 U	1.0 U	1.0 U	1.0 U	1.0 U	1.0 U
	1,1,1-Trichloroethane	4,000	20,000	1.0 U	1.0 U	1.0 U	2.5 U	1.0 U	5.0 U	1.0 U	2.5 U	1.0 U	1.0 U	1.0 U	1.0 U	1.0 U	1.0 U	1.0 U
	Benzene	2,000	10,000	1.0 U	1.0 U	1.0 U	2.5 U	1.0 U	5.0 U	**0.56**	1.2 U	**0.65**	1.0 U	1.0 U	1.0 U	1.0 U	1.0 U	0.50 U
	Vinyl Chloride	2	50,000	**9.7**	**3.8**	**10**	**22**	**23**	**7.4**	**36**	**42**	**55**	1.0 U	1.0 U	1.0 U	1.0 U	1.0 U	1.0 U
	trans-1,2-Dichloroethylene	90	50,000	**9.2**	**2.9**	**15**	**40**	**36**	**12**	**51**	**42**	**51**	1.0 U	1.0 U	1.0 U	1.0 U	1.0 U	1.0 U
	Trichloroethylene	30	5,000	**11**	**5.0**	**110**	**220**	**200**	**150**	**87**	**52**	**78**	**1.2**	1.0 U	1.0 U	1.0 U	1.0 U	1.0 U
	1,2-Dichlorobenzene	2,000	2,000	**2.0**	1.0 U	1.0 U	2.5 U	1.0 U	5.0 U	1.0 U	2.5 U	**1.2**	1.0 U	1.0 U	1.0 U	1.0 U	1.0 U	1.0 U
	1,3-Dichlorobenzene	2,000	50,000	**9.9**	**2.5**	1.0 U	**0.84 J**	1.0 U	5.0 U	**3.8**	**6.0**	**6.2**	1.0 U	1.0 U	1.0 U	1.0 U	1.0 U	1.0 U
	1,4-Dichlorobenzene	200	8,000	**48**	**11**	**2.7**	**3.4**	**3.8**	5.0 U	**12**	**23**	**25**	1.0 U	1.0 U	1.0 U	1.0 U	1.0 U	1.0 U
	cis-1,2-Dichloroethylene	100	50,000	**25**	**11**	**70**	**180**	**170**	**56**	**170**	**140**	**200**	1.0 U	1.0 U	1.0 U	1.0 U	1.0 U	1.0 U
	p-Isopropyltoluene (p-Cymene)	7,000(1)	50,000(1)	2.0 U	2.0 U	2.0 U	5.0 U	2.0 U	10 U	2.0 U	5.0 U	2.0 U	2.0 U	2.0 U	2.0 U	2.0 U	2.0 U	2.0 U
	1,2,4-Trichlorobenzene	2,000	50,000	2.0 U	2.0 U	2.0 U	**1.3 J**	2.0 U	10 U	2.0 U	5.0 U	2.0 U	2.0 U	2.0 U	2.0 U	2.0 U	2.0 U	2.0 U
PAHs																		
(ug/L)	Phenanthrene	NS	10,000	NA	NA	NA	NA	NA	NA	NA	NA	NA	NA	NA	NA	NA	NA	NA
PCBs																		
(ug/L)	Aroclor 1242	5	10	NA	NA	NA	NA	NA	NA	NA	NA	**3.98**	NA	NA	NA	NA	NA	0.0500 U
	Aroclor 1248	5	10	NA	NA	NA	NA	NA	NA	NA	NA	1.10 U	NA	NA	NA	NA	NA	0.0500 U
	Aroclor 1254	5	10	NA	NA	NA	NA	NA	NA	NA	NA	**10.9**	NA	NA	NA	NA	NA	**0.0685**
	Total PCBs	5	10	NA	NA	NA	NA	NA	NA	NA	NA	**14.88**	NA	NA	NA	NA	NA	**0.0685**
Metals, total																		
(ug/L)	Arsenic	NS	900	NA	NA	NA	NA	NA	NA	NA	NA	NA	NA	NA	NA	NA	NA	NA
	Barium	NS	50,000	NA	NA	NA	NA	NA	NA	NA	NA	NA	NA	NA	NA	NA	NA	NA
	Chromium	NS	300	NA	NA	NA	NA	NA	NA	NA	NA	NA	NA	NA	NA	NA	NA	NA
	Lead	NS	10	NA	NA	NA	NA	NA	NA	NA	NA	NA	NA	NA	NA	NA	NA	NA
	Nickel	NS	200	NA	NA	NA	NA	NA	NA	NA	NA	NA	NA	NA	NA	NA	NA	NA
	Silver	NS	7	NA	NA	NA	NA	NA	NA	NA	NA	NA	NA	NA	NA	NA	NA	NA
	Thallium	NS	3,000	NA	NA	NA	NA	NA	NA	NA	NA	NA	NA	NA	NA	NA	NA	NA
	Zinc	NS	900	NA	NA	NA	NA	NA	NA	NA	NA	NA	NA	NA	NA	NA	NA	NA
Metals, dissolved																		
(ug/L)	Arsenic	NS	900	NA	NA	NA	NA	NA	NA	NA	NA	NA	NA	NA	NA	NA	NA	NA
	Barium	NS	50,000	NA	NA	NA	NA	NA	NA	NA	NA	NA	NA	NA	NA	NA	NA	NA
	Nickel	NS	200	NA	NA	NA	NA	NA	NA	NA	NA	NA	NA	NA	NA	NA	NA	NA
	Silver	NS	7	NA	NA	NA	NA	NA	NA	NA	NA	NA	NA	NA	NA	NA	NA	NA
	Zinc	NS	900	NA	NA	NA	NA	NA	NA	NA	NA	NA	NA	NA	NA	NA	NA	NA
General Chemistry																		
(ug/L)	Nitrogen, Nitrate	NS	NS	100 U	NA	NA	NA	NA	NA	NA	NA	NA	**110**	NA	NA	NA	NA	NA
	Sulfate	NS	NS	**13,000**	NA	NA	NA	NA	NA	NA	NA	NA	10,000 U	NA	NA	NA	NA	NA
	Total Organic Carbon	NS	NS	**5,200**	NA	NA	NA	NA	NA	NA	NA	NA	**4,700**	NA	NA	NA	NA	NA

Notes:
ug/L - micrograms per liter.
B - Compound detected in associated method blank
J - Estimated value.
NA - Sample not analyzed for the listed analyte.
NS - No MassDEP standards exist for this compound.
U - Compound was not detected at specified quantitation limit.
Values in **Bold** indicate the compound was detected.
Values shown in Bold and shaded type exceed one or more of the listed MassDEP Method 1 standards.
VOCs - Volatile Organic Compounds.
PAHs - Polynuclear Aromatic Hydrocarbons.
PCBs - Polychlorinated Biphenyls.
(1) - MassDEP Method 1 standards for C9-C10 aromatic hydrocarbons used.
(2) - MassDEP Method 1 standards for 1,3-Dichloropropene used.

Table 1
Summary of Analytical Results for Groundwater Samples
(2008 through 2011)
New Bedford High School
New Bedford, Massachusetts

Analysis	Analyte		Sample ID:	MW-32											MW-33				MW-HH-13		
			Sample Date:	10/21/2010	3/8/2011	3/25/2011	3/25/2011	4/8/2011	4/8/2011	4/28/2011	7/27/2011	8/2/2011	8/2/2011	8/25/2011	10/21/2010	3/8/2011	4/12/2011	8/24/2011	4/23/2009	4/23/2009	2/18/2010
		GW-2	GW-3				Field Dup		Field Dup				Field Dup							Field Dup	
VOCs																					
	1,1-Dichloroethane	1,000	20,000	1.0 U	500 U	100 U	100 U	200 U	200 U	200 U	50 U	25 U	50 U	25 U	1.0 U	1.0 U	1.0 U	1.0 U	NA	NA	1.0 U
	Tetrachloroethylene	50	30,000	1.0 U	500 U	100 U	100 U	200 U	200 U	200 U	50 U	25 U	50 U	25 U	1.0 U	1.0 U	1.0 U	1.0 U	NA	NA	1.0 U
	Chlorobenzene	200	1,000	1.0 U	500 U	100 U	100 U	200 U	200 U	200 U	50 U	25 U	50 U	25 U	1.0 U	1.0 U	1.0 U	1.0 U	NA	NA	1.0 U
	1,1,1-Trichloroethane	4,000	20,000	1.0 U	500 U	100 U	100 U	200 U	200 U	200 U	50 U	25 U	50 U	25 U	1.0 U	1.0 U	1.0 U	1.0 U	NA	NA	1.0 U
	Benzene	2,000	10,000	1.0 U	500 U	100 U	100 U	200 U	200 U	200 U	25 U	12 U	25 U	12 U	1.0 U	1.0 U	1.0 U	0.50 U	NA	NA	1.0 U
	Vinyl Chloride	2	50,000	1.0 U	500 U	100 U	100 U	200 U	200 U	200 U	50 U	25 U	50 U	25 U	1.0 U	1.0 U	1.0 U	1.0 U	NA	NA	1.0 U
	trans-1,2-Dichloroethylene	90	50,000	1.0 U	500 U	**230**	**220**	200 U	200 U	200 U	50 U	**27**	50 U	**29**	1.0 U	1.0 U	1.0 U	1.0 U	NA	NA	1.0 U
	Trichloroethylene	30	5,000	**1.1**	**17,000**	**26,000**	**26,000**	**21,000**	**21,000**	**4,700**	**2,600**	**2,500**	**2,000**	**2,800**	1.0 U	1.0 U	1.0 U	**1.1**	NA	NA	1.0 U
	1,2-Dichlorobenzene	2,000	2,000	1.0 U	500 U	100 U	100 U	200 U	200 U	200 U	50 U	25 U	50 U	25 U	1.0 U	1.0 U	1.0 U	1.0 U	NA	NA	1.0 U
	1,3-Dichlorobenzene	2,000	50,000	1.0 U	500 U	100 U	100 U	200 U	200 U	200 U	50 U	25 U	50 U	25 U	1.0 U	1.0 U	1.0 U	1.0 U	NA	NA	1.0 U
	1,4-Dichlorobenzene	200	8,000	1.0 U	500 U	100 U	100 U	200 U	200 U	200 U	50 U	25 U	50 U	25 U	1.0 U	1.0 U	1.0 U	1.0 U	NA	NA	1.0 U
	cis-1,2-Dichloroethylene	100	50,000	**4.5**	**910**	**980**	**1,000**	**480**	**470**	**250**	**200**	**220**	**180**	**250**	1.0 U	1.0 U	1.0 U	1.0 U	NA	NA	1.0 U
	p-Isopropyltoluene (p-Cymene)	7,000(1)	50,000(1)	2.0 U	1,000 U	200 U	200 U	400 U	400 U	400 U	100 U	50 U	100 U	50 U	2.0 U	2.0 U	2.0 U	2.0 U	NA	NA	2.0 U
	1,2,4-Trichlorobenzene	2,000	50,000	2.0 U	1,000 U	200 U	200 U	400 U	400 U	400 U	100 U	50 U	100 U	50 U	2.0 U	2.0 U	2.0 U	2.0 U	NA	NA	2.0 U
PAHs																					
(ug/L)	Phenanthrene	NS	10,000	NA	NA	NA	NA	NA	NA	NA	NA	NA	NA	NA	NA	NA	NA	NA	0.05 U	0.05 U	NA
PCBs																					
(ug/L)	Aroclor 1242	5	10	NA	NA	NA	NA	NA	NA	NA	NA	NA	NA	0.0500 U	NA	NA	NA	0.0500 U	0.050 U	NA	NA
	Aroclor 1248	5	10	NA	NA	NA	NA	NA	NA	NA	NA	NA	NA	0.0500 U	NA	NA	NA	0.0500 U	0.050 U	NA	NA
	Aroclor 1254	5	10	NA	NA	NA	NA	NA	NA	NA	NA	NA	NA	**0.121**	NA	NA	NA	**0.0630**	0.050 U	NA	NA
	Total PCBs	5	10	NA	NA	NA	NA	NA	NA	NA	NA	NA	NA	**0.121**	NA	NA	NA	**0.0630**	0.050 U	NA	NA
Metals, total																					
(ug/L)	Arsenic	NS	900	NA	NA	NA	NA	NA	NA	NA	NA	NA	NA	NA	NA	NA	NA	NA	5.0 U	5.0 U	NA
	Barium	NS	50,000	NA	NA	NA	NA	NA	NA	NA	NA	NA	NA	NA	NA	NA	NA	NA	**5,570**	**5,710**	NA
	Chromium	NS	300	NA	NA	NA	NA	NA	NA	NA	NA	NA	NA	NA	NA	NA	NA	NA	5.0 U	5.0 U	NA
	Lead	NS	10	NA	NA	NA	NA	NA	NA	NA	NA	NA	NA	NA	NA	NA	NA	NA	7.5 U	7.5 U	NA
	Nickel	NS	200	NA	NA	NA	NA	NA	NA	NA	NA	NA	NA	NA	NA	NA	NA	NA	5.0 U	5.0 U	NA
	Silver	NS	7	NA	NA	NA	NA	NA	NA	NA	NA	NA	NA	NA	NA	NA	NA	NA	3.0 U	3.0 U	NA
	Thallium	NS	3,000	NA	NA	NA	NA	NA	NA	NA	NA	NA	NA	NA	NA	NA	NA	NA	30.0 U	30.0 U	NA
	Zinc	NS	900	NA	NA	NA	NA	NA	NA	NA	NA	NA	NA	NA	NA	NA	NA	NA	**17.0**	**20.0**	NA
Metals, dissolved																					
(ug/L)	Arsenic	NS	900	NA	NA	NA	NA	NA	NA	NA	NA	NA	NA	NA	NA	NA	NA	NA	5.0 U	5.0 U	NA
	Barium	NS	50,000	NA	NA	NA	NA	NA	NA	NA	NA	NA	NA	NA	NA	NA	NA	NA	**5,340**	**5,490**	NA
	Nickel	NS	200	NA	NA	NA	NA	NA	NA	NA	NA	NA	NA	NA	NA	NA	NA	NA	5.0 U	5.0 U	NA
	Silver	NS	7	NA	NA	NA	NA	NA	NA	NA	NA	NA	NA	NA	NA	NA	NA	NA	3.0 U	3.0 U	NA
	Zinc	NS	900	NA	NA	NA	NA	NA	NA	NA	NA	NA	NA	NA	NA	NA	NA	NA	**14.0**	**15.0**	NA
General Chemistry																					
(ug/L)	Nitrogen, Nitrate	NS	NS	NA	NA	NA	NA	NA	NA	NA	NA	NA	NA	NA	NA	NA	NA	NA	NA	NA	NA
	Sulfate	NS	NS	NA	NA	NA	NA	NA	NA	NA	NA	NA	NA	NA	NA	NA	NA	NA	NA	NA	NA
	Total Organic Carbon	NS	NS	NA	NA	NA	NA	NA	NA	NA	NA	NA	NA	NA	NA	NA	NA	NA	NA	NA	NA

Notes:
ug/L - micrograms per liter.
B - Compound detected in associated method blank
J - Estimated value.
NA - Sample not analyzed for the listed analyte.
NS - No MassDEP standards exist for this compound.
U - Compound was not detected at specified quantitation limit.
Values in **Bold** indicate the compound was detected.
Values shown in Bold and shaded type exceed one or more of the listed MassDEP Method 1 standards.
VOCs - Volatile Organic Compounds.
PAHs - Polynuclear Aromatic Hydrocarbons.
PCBs - Polychlorinated Biphenyls.
(1) - MassDEP Method 1 standards for C9-C10 aromatic hydrocarbons used.
(2) - MassDEP Method 1 standards for 1,3-Dichloropropene used.

Table 1
Summary of Analytical Results for Groundwater Samples
(2008 through 2011)
New Bedford High School
New Bedford, Massachusetts

Analysis	Analyte	Sample ID:		MW-HRC-33		
		Sample Date:		4/23/2009	4/23/2009	2/17/2010
		GW-2	GW-3		Field Dup	
VOCs						
	1,1-Dichloroethane	1,000	20,000	NA	NA	1.0 U
	Tetrachloroethylene	50	30,000	NA	NA	1.0 U
	Chlorobenzene	200	1,000	NA	NA	1.0 U
	1,1,1-Trichloroethane	4,000	20,000	NA	NA	1.0 U
	Benzene	2,000	10,000	NA	NA	1.0 U
	Vinyl Chloride	2	50,000	NA	NA	1.0 U
	trans-1,2-Dichloroethylene	90	50,000	NA	NA	1.0 U
	Trichloroethylene	30	5,000	NA	NA	1.0 U
	1,2-Dichlorobenzene	2,000	2,000	NA	NA	1.0 U
	1,3-Dichlorobenzene	2,000	50,000	NA	NA	1.0 U
	1,4-Dichlorobenzene	200	8,000	NA	NA	1.0 U
	cis-1,2-Dichloroethylene	100	50,000	NA	NA	1.0 U
	p-Isopropyltoluene (p-Cymene)	7,000(1)	50,000(1)	NA	NA	2.0 U
	1,2,4-Trichlorobenzene	2,000	50,000	NA	NA	2.0 U
PAHs						
(ug/L)	Phenanthrene	NS	10,000	0.05 U	NA	NA
PCBs						
(ug/L)	Aroclor 1242	5	10	0.050 U	0.050 U	NA
	Aroclor 1248	5	10	0.050 U	0.050 U	NA
	Aroclor 1254	5	10	0.050 U	0.050 U	NA
	Total PCBs	5	10	0.050 U	0.050 U	NA
Metals, total						
(ug/L)	Arsenic	NS	900	5.0 U	NA	NA
	Barium	NS	50,000	**157**	NA	NA
	Chromium	NS	300	5.0 U	NA	NA
	Lead	NS	10	**10.5**	NA	NA
	Nickel	NS	200	5.0 U	NA	NA
	Silver	NS	7	3.0 U	NA	NA
	Thallium	NS	3,000	30.0 U	NA	NA
	Zinc	NS	900	**300**	NA	NA
Metals, dissolved						
(ug/L)	Arsenic	NS	900	5.0 U	NA	NA
	Barium	NS	50,000	**141**	NA	NA
	Nickel	NS	200	5.0 U	NA	NA
	Silver	NS	7	3.0 U	NA	NA
	Zinc	NS	900	**270**	NA	NA
General Chemistry						
(ug/L)	Nitrogen, Nitrate	NS	NS	NA	NA	NA
	Sulfate	NS	NS	NA	NA	NA
	Total Organic Carbon	NS	NS	NA	NA	NA

Notes:
ug/L - micrograms per liter.
B - Compound detected in associated method blank
J - Estimated value.
NA - Sample not analyzed for the listed analyte.
NS - No MassDEP standards exist for this compound.
U - Compound was not detected at specified quantitation limit.
Values in **Bold** indicate the compound was detected.
Values shown in Bold and shaded type exceed one or more of the listed MassDEP Method 1 standards.
VOCs - Volatile Organic Compounds.
PAHs - Polynuclear Aromatic Hydrocarbons.
PCBs - Polychlorinated Biphenyls.
(1) - MassDEP Method 1 standards for C9-C10 aromatic hydrocarbons used.
(2) - MassDEP Method 1 standards for 1,3-Dichloropropene used.

Table 2
Summary of Analytical Results for NAPL Samples
(August 2010 through August 2011)
New Bedford High School
New Bedford, Massachusetts

Analysis	Sample ID: / Sample Date: / Analyte	MW-27 8/30/2010		MW-27R 8/22/2011	
VOCs					
(mg/kg)	Acetone	**140**	**JB**	NA	
	tert-Amyl Methyl Ether (TAME)	45	U	NA	
	Benzene	22	U	NA	
	Bromobenzene	22	U	NA	
	Bromochloromethane	22	U	NA	
	Bromodichloromethane	45	U	NA	
	Bromoform	220	U	NA	
	Bromomethane	**14**	**J**	NA	
	2-Butanone (MEK)	450	U	NA	
	n-Butylbenzene	**1.3**	**J**	NA	
	sec-Butylbenzene	22	U	NA	
	tert-Butylbenzene	22	U	NA	
	tert-Butyl Ethyl Ether (TBEE)	45	U	NA	
	Carbon Disulfide	**57**	**J**	NA	
	Carbon Tetrachloride	220	U	NA	
	Chlorobenzene	22	U	NA	
	Chlorodibromomethane	90	U	NA	
	Chloroethane	450	U	NA	
	Chloroform	45	U	NA	
	Chloromethane	45	U	NA	
	2-Chlorotoluene	22	U	NA	
	4-Chlorotoluene	22	U	NA	
	1,2-Dibromo-3-chloropropane (DBCP)	220	U	NA	
	1,2-Dibromoethane (EDB)	90	U	NA	
	Dibromomethane	22	U	NA	
	1,2-Dichlorobenzene	**22**		NA	
	1,3-Dichlorobenzene	22	U	NA	
	1,4-Dichlorobenzene	**29**		NA	
	Dichlorodifluoromethane (Freon 12)	45	U	NA	
	1,1-Dichloroethane	22	U	NA	
	1,2-Dichloroethane	22	U	NA	
	1,1-Dichloroethylene	**15**	**J**	NA	
	cis-1,2-Dichloroethylene	**990**		NA	
	trans-1,2-Dichloroethylene	**87**		NA	
	1,2-Dichloropropane	22	U	NA	
	1,3-Dichloropropane	11	U	NA	
	2,2-Dichloropropane	220	U	NA	
	1,1-Dichloropropene	45	U	NA	
	cis-1,3-Dichloropropene	45	U	NA	
	trans-1,3-Dichloropropene	45	U	NA	
	Diethyl Ether	45	U	NA	
	Diisopropyl Ether (DIPE)	11	U	NA	
	1,4-Dioxane	2,200	U	NA	
	Ethylbenzene	**47**		NA	
	Hexachlorobutadiene	22	U	NA	
	2-Hexanone (MBK)	900	U	NA	
	Isopropylbenzene (Cumene)	**2.0**	**J**	NA	
	p-Isopropyltoluene (p-Cymene)	**7.0**	**J**	NA	
	Methyl tert-Butyl Ether (MTBE)	90	U	NA	
	Methylene Chloride	110	U	NA	
	4-Methyl-2-pentanone (MIBK)	450	U	NA	
	Naphthalene	**27**	**J**	NA	
	n-Propylbenzene	22	U	NA	
	Styrene	**480**		NA	
	1,1,1,2-Tetrachloroethane	90	U	NA	
	1,1,2,2-Tetrachloroethane	45	U	NA	
	Tetrachloroethylene	**10**	**J**	NA	
	Tetrahydrofuran	220	U	NA	
	Toluene	**12**	**J**	NA	
	1,2,3-Trichlorobenzene	**230**		NA	
	1,2,4-Trichlorobenzene	**1,000**		NA	
	1,1,1-Trichloroethane	45	U	NA	
	1,1,2-Trichloroethane	22	U	NA	
	Trichloroethylene	**220,000**		NA	
	Trichlorofluoromethane (Freon 11)	45	U	NA	
	1,2,3-Trichloropropane	45	U	NA	
	1,2,4-Trimethylbenzene	**3.1**	**J**	NA	
	1,3,5-Trimethylbenzene	**1.3**	**J**	NA	
	Vinyl Chloride	**7.2**	**J**	NA	
	m+p Xylene	**13**	**J**	NA	
	o-Xylene	22	U	NA	
	TICs	ND		NA	
PCBs					
(mg/kg)	Aroclor 1016	NA		3,810	U
	Aroclor 1221	NA		3,810	U
	Aroclor 1232	NA		3,810	U
	Aroclor 1242	NA		3,810	U
	Aroclor 1248	NA		3,810	U
	Aroclor 1254	NA		**246,000**	
	Aroclor 1260	NA		3,810	U
	Aroclor 1262	NA		3,810	U
	Aroclor 1268	NA		3,810	U
	Total PCBs	NA		**246,000**	
Total Petroleum Hydrocarbons					
(mg/kg)	Total Petroleum Hydrocarbons (C9-C44)	NA		**466,000**	

Notes:
mg/kg - milligrams per kilogram or parts per million (ppm).
B - Compound detected in associated method blank
J - Estimated value; detected below quantitation limit.
NA - Sample not analyzed for the listed analyte.
ND - Not detected.
U - Compound was not detected at specified quantitation limit.
Values in **Bold** indicate the compound was detected.
VOCs - Volatile Organic Compounds.
PCBs - Polychlorinated Biphenyls.

Table 3
Summary of Analytical Results for Absorbent Sock Sample
(August 2011)
New Bedford High School
New Bedford, Massachusetts

Analysis	Sample ID:	MW27R WIPE	
	Sample Date:	8/5/2011	
	Analyte		
PCBs			
(ug abs)	Aroclor 1016	1,500	U
	Aroclor 1221	1,500	U
	Aroclor 1232	1,500	U
	Aroclor 1242	1,500	U
	Aroclor 1248	1,000	U
	Aroclor 1254	**17,500**	
	Aroclor 1260	1,000	U
	Aroclor 1262	500	U
	Aroclor 1268	500	U
	Total PCBs	**17,500**	

Notes:
ug - micrograms.
U - Compound was not detected at specified quantitation limit.
Values in **Bold** indicate the compound was detected.
PCBs - Polychlorinated Biphenyls.

FIGURES

FIGURE 1

SITE AERIAL PHOTOGRAPH
New Bedford High School
NEW BEDFORD, MASSACHUSETTS

R:\Projects\GIS_2007\54634_NBedford\FIG1_NEWBEDHISCH_REV031710.mxd

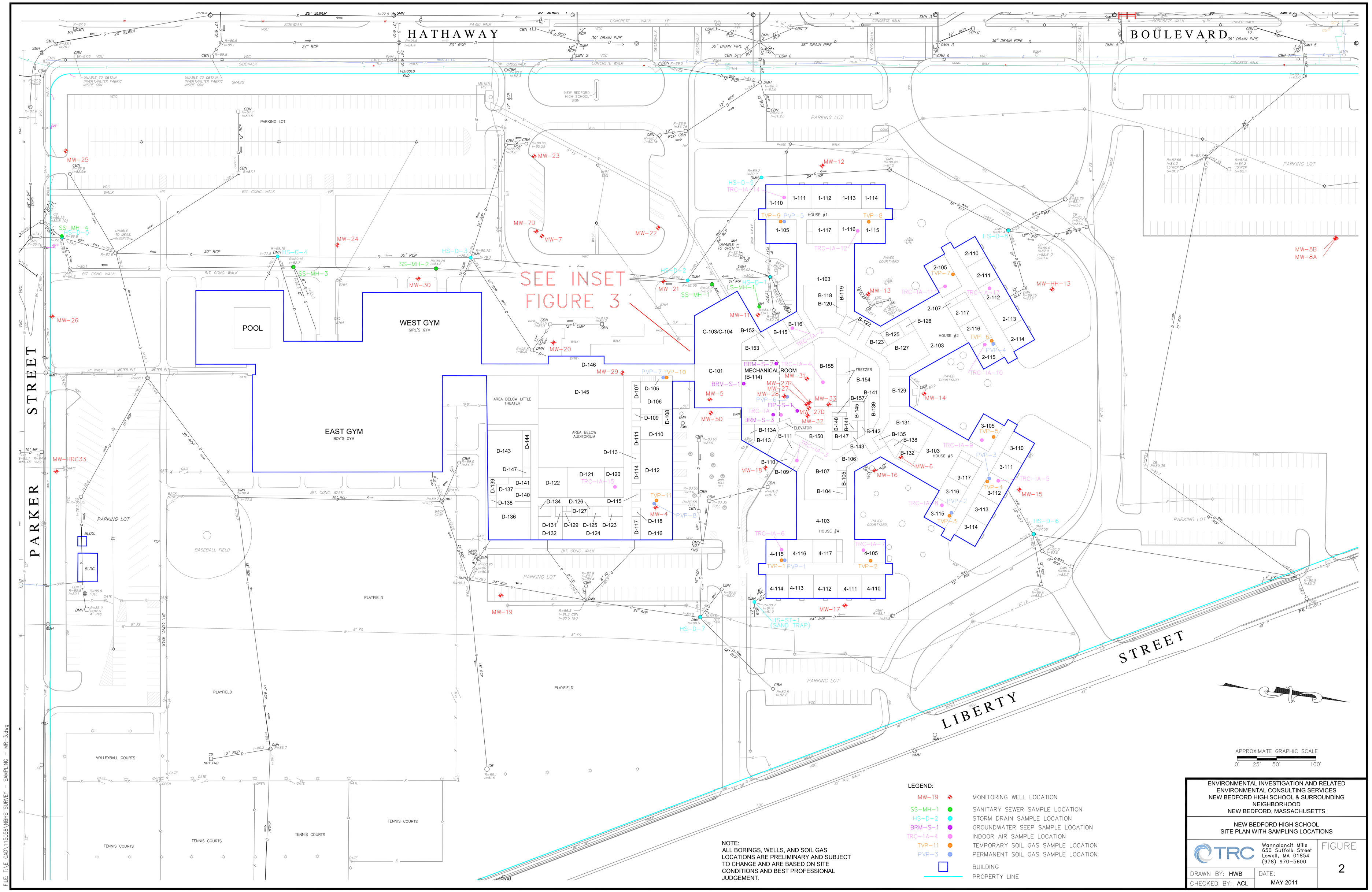

NOTE:
ALL BORINGS, WELLS, AND SOIL GAS LOCATIONS ARE PRELIMINARY AND SUBJECT TO CHANGE AND ARE BASED ON SITE CONDITIONS AND BEST PROFESSIONAL JUDGEMENT.

LEGEND:

MW-19	MONITORING WELL LOCATION
SS-MH-1	SANITARY SEWER SAMPLE LOCATION
HS-D-2	STORM DRAIN SAMPLE LOCATION
BRM-S-1	GROUNDWATER SEEP SAMPLE LOCATION
TRC-IA-4	INDOOR AIR SAMPLE LOCATION
TVP-11	TEMPORARY SOIL GAS SAMPLE LOCATION
PVP-3	PERMANENT SOIL GAS SAMPLE LOCATION
	BUILDING
	PROPERTY LINE

ENVIRONMENTAL INVESTIGATION AND RELATED ENVIRONMENTAL CONSULTING SERVICES
NEW BEDFORD HIGH SCHOOL & SURROUNDING NEIGHBORHOOD
NEW BEDFORD, MASSACHUSETTS

NEW BEDFORD HIGH SCHOOL
SITE PLAN WITH SAMPLING LOCATIONS

TRC
Wannalancit Mills
650 Suffolk Street
Lowell, MA 01854
(978) 970-5600

FIGURE 2

DRAWN BY: HWB
DATE: MAY 2011
CHECKED BY: ACL

FILE: T:\E_CAD\115058\NBHS SURVEY - SAMPLING - MR-3.dwg

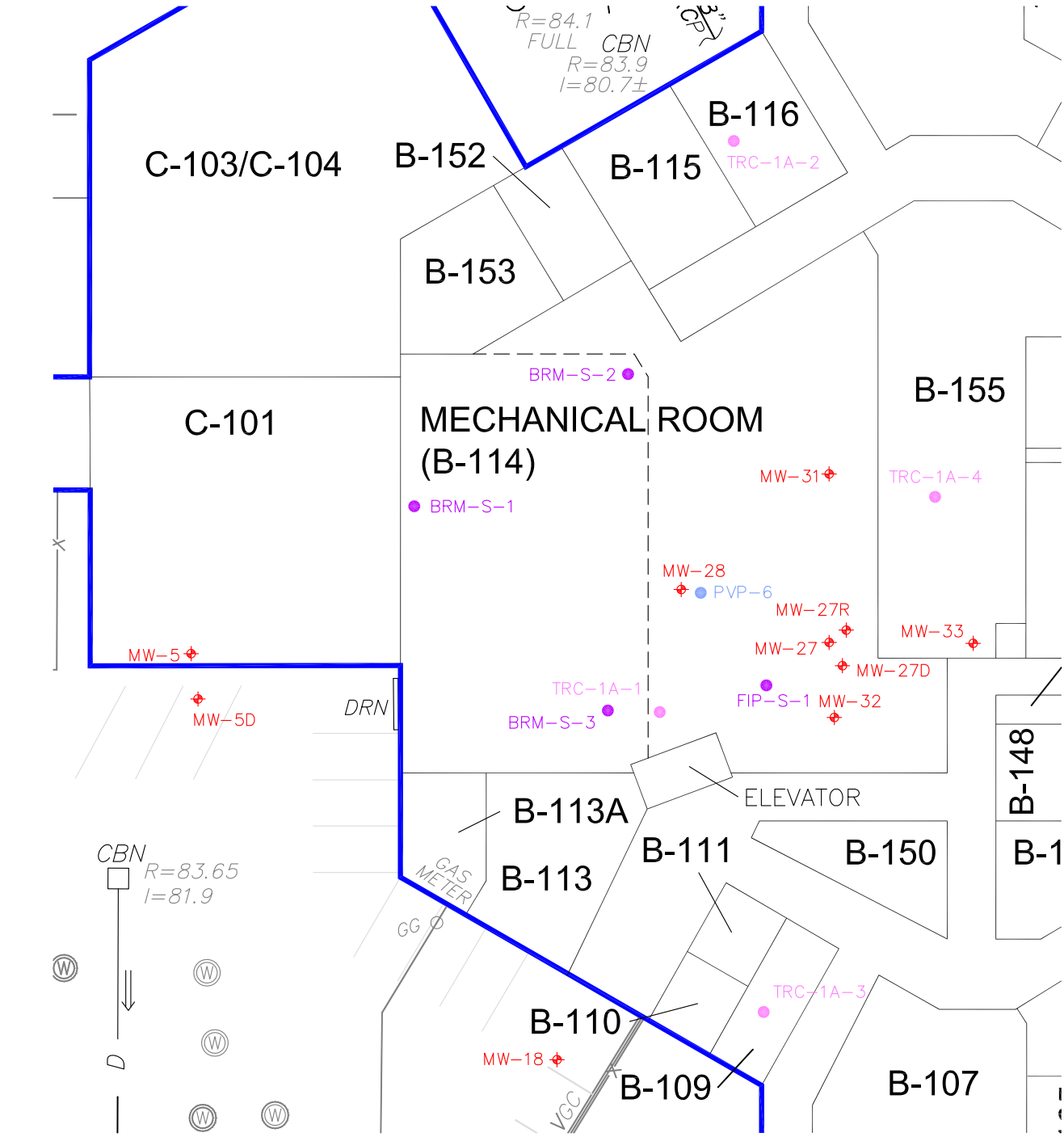

LEGEND:

MW-19	MONITORING WELL LOCATION
HS-D-2	STORM DRAIN SAMPLE LOCATION
BRM-S-1	GROUNDWATER SEEP SAMPLE LOCATION
TRC-1A-4	INDOOR AIR SAMPLE LOCATION
PVP-3	PERMANENT SOIL GAS SAMPLE LOCATION
	BUILDING

APPROXIMATE GRAPHIC SCALE

0' 30' 60'

ENVIRONMENTAL INVESTIGATION AND RELATED
ENVIRONMENTAL CONSULTING SERVICES
NEW BEDFORD HIGH SCHOOL & SURROUNDING
NEIGHBORHOOD
NEW BEDFORD, MASSACHUSETTS

NEW BEDFORD HIGH SCHOOL

DETAIL OF SITE PLAN IN VICINITY OF MECHANICAL ROOM

TRC
Wannalancit Mills
650 Suffolk Street
Lowell, MA 01854
(978) 970-5600

FIGURE 3

DRAWN BY: HWB
CHECKED BY: ACL
DATE: MAY 2011

FILE: T:\E_CAD\115058\NBHS SURVEY - SAMPLING - MR-3.dwg

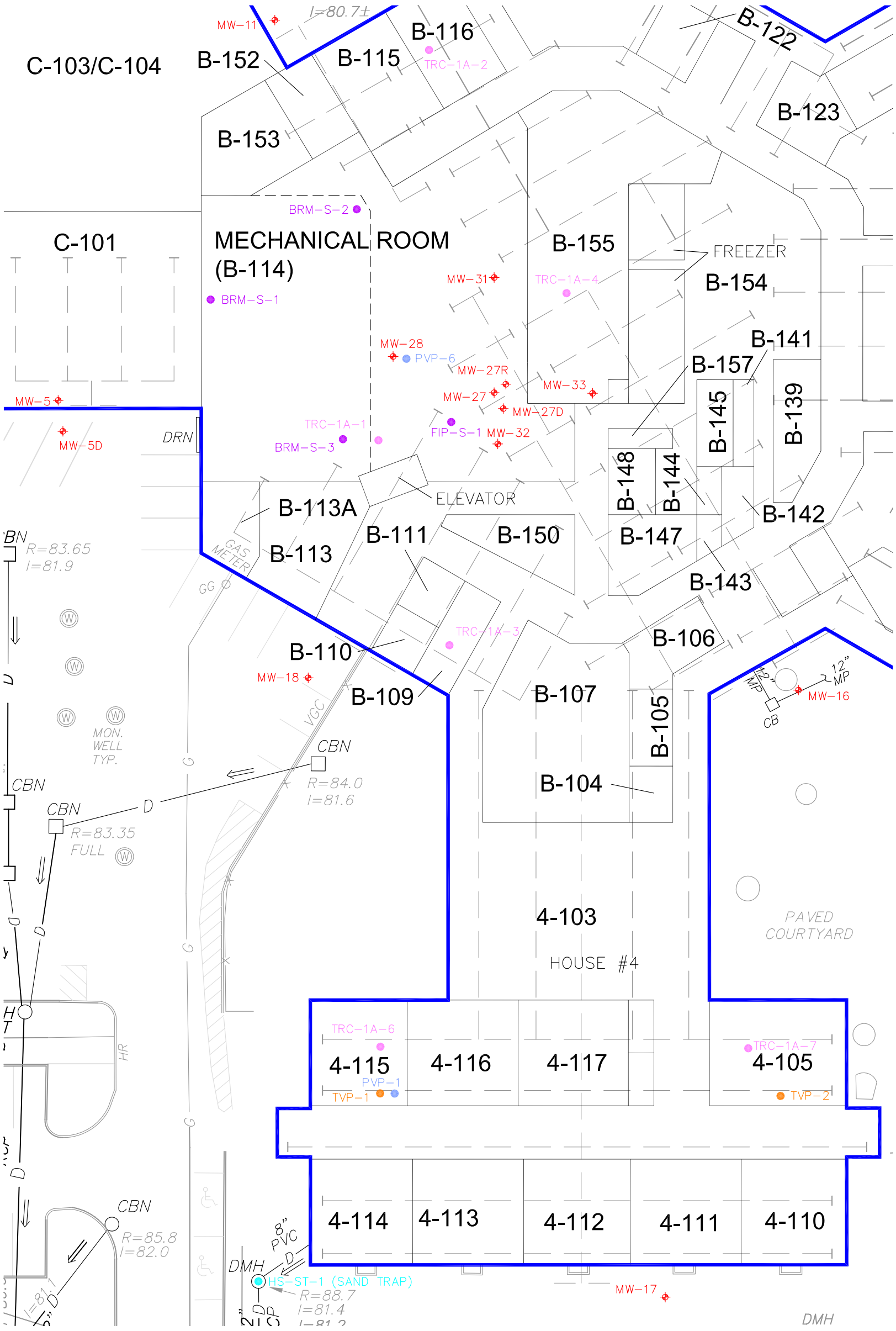

LEGEND:

MW-19	MONITORING WELL LOCATION (SELECT INTERIOR LOCATIONS APPROXIMATE)
HS-D-2	STORM DRAIN SAMPLE LOCATION
BRM-S-1	GROUNDWATER SEEP SAMPLE LOCATION
TRC-1A-4	INDOOR AIR SAMPLE LOCATION
PVP-3	PERMANENT SOIL GAS SAMPLE LOCATION
	BUILDING
4-114	INTERIOR ROOM AND DESIGNATION
	APPROXIMATE UNDERDRAIN

NOTE:
UNDERDRAIN INFORMATION FROM "SITE UTILITIES PLAN, NEW BEDFORD HIGH SCHOOL" BY OWEN F. HACKETT, JR. ASSOCIATES ARCHITECTS.

APPROXIMATE GRAPHIC SCALE
0' 30' 60'

ENVIRONMENTAL INVESTIGATION AND RELATED ENVIRONMENTAL CONSULTING SERVICES
NEW BEDFORD HIGH SCHOOL & SURROUNDING NEIGHBORHOOD
NEW BEDFORD, MASSACHUSETTS

NEW BEDFORD HIGH SCHOOL - DETAIL OF SITE PLAN
WITH APPROXIMATE UNDERDRAIN SYSTEM

TRC
Wannalancit Mills
650 Suffolk Street
Lowell, MA 01854
(978) 970-5600

DRAWN BY: HWB
CHECKED BY: ACL
DATE: NOV 2011

FIGURE 4

FILE: T:\E_CAD\115058\NBHS SURVEY - SAMPLING - MR-3.dwg

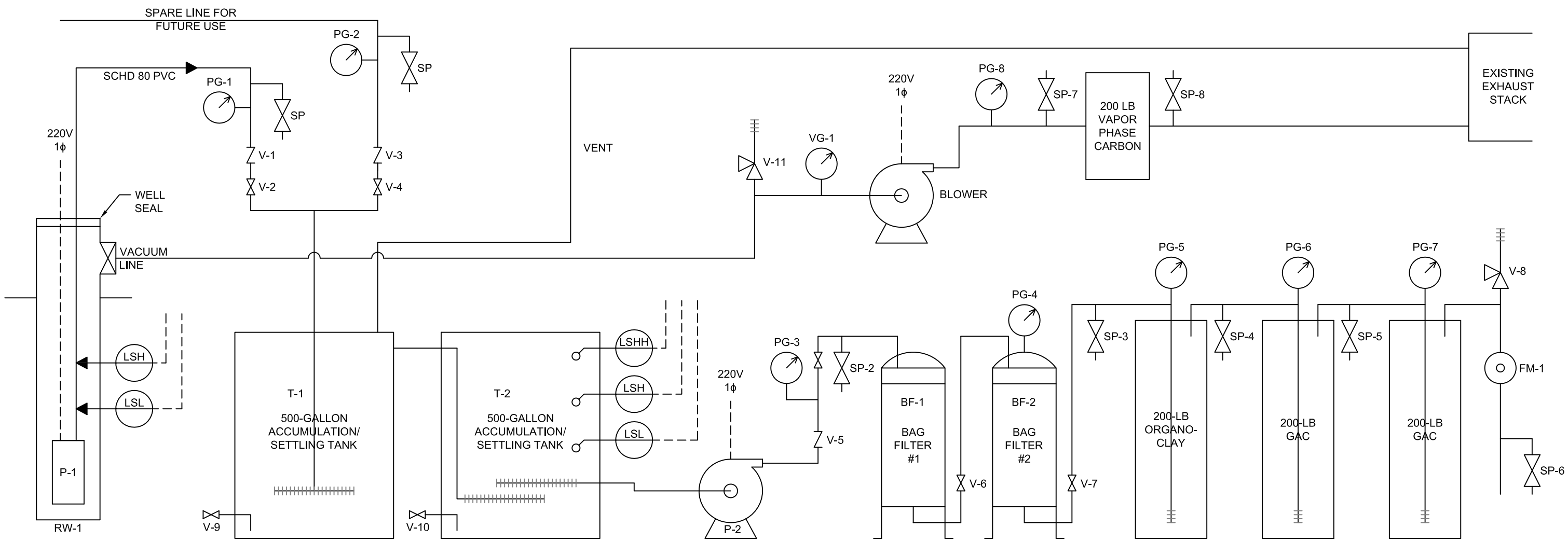

LEGEND:

LSL	LOW LEVEL SWITCH	SP	SAMPLE PORT	P-1	PUMP
LSH	HIGH LEVEL SWITCH		BALL VALVE	GAC	GRANULAR ACTIVATED CARBON
LSHH	HIGH HIGH LEVEL SWITCH		CHECK VALVE	220V 1ϕ	220 VOLTS, SINGLE PHASE
	PRESSURE GAUGE		VACUUM RELIEF		
FM-1	FLOW METER		DISTRIBUTOR		

NEW BEDFORD HIGH SCHOOL
NEW BEDFORD, MASSACHUSETTS

PROCESS AND INSTRUMENTATION DIAGRAM

TRC
Wannalancit Mills
650 Suffolk Street
Lowell, MA 01854
(978) 970-5600

DRAWN BY: HWB
CHECKED BY: ACL
DATE: NOV 2011

FIGURE 5

FILE: T:\E_CAD\115058\PROCESS DIA NBHS.dwg

APPENDIX A

ESTIMATE OF SUSTAINABLE PUMPING RATE

Table A-1
Estimate of Sustainable Pumping Rate
New Bedford High School
New Bedford, MA

Statement of Problem:

TRC is planning to install a pumping system in a 4-inch diameter groundwater recovery well (MW-27R) to lower groundwater below the elevation of an underdrain system below the building. Based upon observations during drilling, the elevation of the underdrain is estimated to be approximately 82 feet. Estimate the pumping rate at the recovery well that is required to achieve this objective.

Background Information:

The area of interest is located near a mechanical room inside the New Bedford High School. The geology below the concrete floor consists of the following:

- Approximately 4 feet of fine to medium sand with gravel;
- Approximately 3 feet (average) of fine sand;
- Approximately 4 feet of silt and sand; and
- Bouldery Glacial Till.

Groundwater is present at a depth of approximately 2.3 feet below the floor of the building. Assuming that the fine sand is not contributing significant amounts of water to the recovery well and represents the bottom of the primary water-bearing soil unit beneath the building, the saturated thickness of the primary water-bearing soils is estimated to be approximately 1.7 feet. With a pump, the available drawdown at the recovery well is assumed to be approximately 1.5 feet or less (assume sand and gravel layer could be fully drained).

Water levels in certain monitoring wells were monitored during previous groundwater extraction events from MW-27R using a vactor truck. These data have been used to estimate the hydraulic properties of the primary water-bearing soils beneath the New Bedford High School. Based upon analysis of time versus drawdown data, the transmissivity and storage coefficients were estimated as follows:

Equations: $T = [(0.183)(Q)]/\Delta s$ and $S = [(2.25)(T)(t_0)]/r^2$

Where:
T = Transmissivity (ft^2/day)
Q = Pumping rate at recovery well MW-27R (ft^3/day);
Δs = Change in drawdown over one log cycle (feet);
t_0 = Projected time where drawdown is 0 (days); and
r = distance from pumping well to observation well where measurements were made (feet).
S = Storage Coefficient, Unitless

Well	Q (ft^3/day)	Δs (feet)	T (ft^2/day)	t_0 (days)	r (feet)	S (unitless
MW-27	327	0.076	748	2.1E-06	8.5	4.9E-05
MW-32	558	0.13	837	0.0076	17	0.05
		Geomean:	791			0.002

Supporting figures used to estimate Δs are attached.

Assumptions

1. Water-bearing formation is homogenous and isotropic. Based upon a review of Transmissivity, there is some variability in hydraulic properties. By using averages, the potential for error is minimized.
2. Water-bearing unit is uniform thickness and infinite in areal extent. This assumption is reasonable based upon stratigraphy presented on boring logs and shown on attached cross sections.
3. The water-bearing unit receives no recharge. This assumption is reasonable as the area where groundwater is extracted is beneath a building and there are no significant sources of vertical recharge to soils beneath the building.
4. Water removed from storage is discharged instantaneously when head is lowered;
5. Pumped well fully penetrates the water-bearing unit. This assumption is accurate based upon well construction and site geology.
6. Pumping well is 100 percent efficient. All wells are not 100 percent efficient. Therefore, drawdown will be underpredicted at the pumping well.
7. Laminar flow exists throughout water-bearing unit. This is a reasonable assumption except immediately adjacent to the pumping well.
8. Water table has no slope prior to pumping. This assumption is reasonable based upon water level data obtained from site observation wells.

To estimate the pumping rate for a 100 percent efficient recovery well, used the Theis Equation;

$s = [(Q*W(u))/(4*\pi*T)]$ $u = [(r^2*S)/(4*T*t)]$

Where:
W(u) = Theis Well Function of u (from Driscoll, F.A., 1986. Groundwater and Wells. The Johnson Division, St. Paul, MN;
t = time since pumping started (days); and
r = distance from pumping well to where drawdown is predicted (feet).

All other parameters as previously defined.

Estimate pumping rate that allows for 1.5 feet of drawdown at MW-27R (assume sand and gravel layer fully dewatered).

Proposed Q (gpm)	Proposed Q (ft^3/day)	Permissible Drawdown (feet)	Predicted Drawdown (feet)	Tranmissivity (ft^2/day)	Storage Coefficient (unitless)	u (unitless)	W(u) (unitless)	r (feet)	t (days)
Estimate Maximum Permissible Pumping Rate									
3	578	1.7	1.1	791	0.002	5.3E-09	18.4783	0.5	30
4	770	1.7	1.4	791	0.002	5.3E-09	18.4783	0.5	30
5	963	1.7	1.8	791	0.002	5.3E-09	18.4783	0.5	30
Estimate Drawdown at Distance of 10 feet, 20 feet and 30 feet from Extraction Well									
3	578	NA	0.7	791	0.002	4.7E-06	11.6907	15	30
3	578	NA	0.6	791	0.002	1.9E-05	10.2939	30	30
4	770	NA	0.9	791	0.002	4.7E-06	11.6907	15	30
4	770	NA	0.8	791	0.002	1.9E-05	10.2939	30	30

Targeting 3 to 4 gpm should be adequate to dewater the permeable sand and gravel unit contributing water to the underdrains to a distance of 20 to 30 feet from recovery well. When compared to water levels from January which appear to be higher than other monitoring events, the water levels within 30 feet are predicted to be less than 81.6 feet in elevation or approximately 3 feet below the elevation of the floor. Pumping rates are generally consistent with extraction rates during vactor extraction events from well MW-27R. Pumping rates will be less during dry periods as transmissivity will be reduced.

APPENDIX B

NOTIFICATION LETTERS TO CITY OF NEW BEDFORD MAYOR AND BOARD OF HEALTH

Wannalancit Mills
650 Suffolk Street
Lowell, MA 01854

978.970.5600 PHONE
978.453.1995 FAX

www.TRCsolutions.com

TRC Reference Number: 115058.0000

February 22, 2012

Marianne B. De Souza
Health Department
1213 Purchase Street
First Floor
New Bedford, MA 02740

RE: Notice of Immediate Response Action Plan Modification
230 Hathaway Boulevard
New Bedford, Massachusetts
Release Tracking Number 4-22409

Ms. De Souza:

On behalf of the City of New Bedford, Massachusetts, and pursuant to 310 CMR 40.1403(3)(b) of the Massachusetts Contingency Plan (MCP), TRC Environmental Corporation (TRC) has prepared this letter to inform you of the submittal of an Immediate Response Action Plan Modification pertaining to a Substantial Release Migration / Critical Exposure Pathway at the New Bedford High School campus in New Bedford, Massachusetts. This submittal will be made to the Massachusetts Department of Environmental Protection (MassDEP) by February 23, 2012.

A copy of this document can be obtained from Cheryl Henlin in the Department of Environmental Stewardship. If you have any questions concerning this letter please contact me at (978) 656-3565.

Sincerely,
TRC Environmental Corporation

David M. Sullivan, CHMM, LSP
Sr. Project Manager

Cc: Cheryl Henlin, New Bedford Department of Environmental Stewardship

Wannalancit Mills
650 Suffolk Street
Lowell, MA 01854

978.970.5600 PHONE
978.453.1995 FAX

www.TRCsolutions.com

TRC Reference Number: 115058.0000

February 22, 2012

Mayor Jon Mitchell
City Hall, Room 311
133 William Street
New Bedford, MA 02740

RE: Notice of Immediate Response Action Plan Modification
230 Hathaway Boulevard
New Bedford, Massachusetts
Release Tracking Number 4-22409

Mr. Mayor Mitchell:

On behalf of the City of New Bedford, Massachusetts, and pursuant to 310 CMR 40.1403(3)(b) of the Massachusetts Contingency Plan (MCP), TRC Environmental Corporation (TRC) has prepared this letter to inform you of the submittal of an Immediate Response Action Plan Modification pertaining to a Substantial Release Migration / Critical Exposure Pathway at the New Bedford High School campus in New Bedford, Massachusetts. This submittal will be made to the Massachusetts Department of Environmental Protection (MassDEP) by February 23, 2012.

A copy of this document can be obtained from Cheryl Henlin in the Department of Environmental Stewardship. If you have any questions concerning this letter please contact me at (978) 656-3565.

Sincerely,
TRC Environmental Corporation

David M. Sullivan, CHMM, LSP
Sr. Project Manager

Cc: Cheryl Henlin, New Bedford Department of Environmental Stewardship