Wannalancit Mills
650 Suffolk Street
Lowell, MA 01854

978.970.5600 PHONE
978.453.1995 FAX

www.TRCsolutions.com

October 15, 2012

Mr. Wayne Perry
IPP Project Manager
Department of Public Infrastructure
City of New Bedford
1105 Shawmut Avenue
New Bedford, Massachusetts 02746

Subject: Quarterly Self-Monitoring Report
Industrial Discharge Permit #S-123
New Bedford High School
New Bedford, Massachusetts

Dear Mr. Perry:

This letter provides quarterly self-monitoring results associated with industrial wastewater effluent discharge from the New Bedford High School (NBHS) Mechanical Room located at 230 Hathaway Boulevard in New Bedford, Massachusetts (see Figure 1). TRC Environmental Corporation (TRC) conducted the quarterly self-monitoring sampling on behalf of the City of New Bedford (City) on September 19 and 20, 2012 per the Department of Public Infrastructure (DPI) issued Industrial Discharge Permit #S-123 (Permit) and the sampling, preservation, handling and analytical methods specified in 40 CFR § 136. This is the second self-monitoring report submitted under this Permit and meets the requirements of 40 CFR § 403.12 as described herein.

Permittee

In accordance with the provisions of the City's Code of Ordinances (Chapter 16, Article II), the DPI issued the Permit to the following permittee on March 19, 2012:

- Facility Name: TRC at New Bedford High School
- Address: Wannalancit Mills
650 Suffolk Street
Lowell, Massachusetts 01854
- Site Address: 230 Hathaway Boulevard
New Bedford, Massachusetts 02740

- Contact: David Sullivan, LSP
  (978) 970-5600

On July 2, 2012, the DPI issued an amendment to the permit, allowing for samples to be collected at a frequency of one (1) sample during every six (6) hour period over a twenty-four (24) hour period of operation.

No additional environmental control permits are currently held by or for the above referenced facility by TRC at this time.

Description of Operations

In February 2012, a hydraulic control system was installed to mitigate the potential for impacted groundwater beneath the NBHS Mechanical Room to enter into the underdrain system that was installed beneath the building during construction. This system is a temporary remedy, designed to control migration of impacted groundwater during periods of high groundwater and is not associated with an onsite industrial production process. The applicable North American Industry Classification Standard (NAICS) code for the permittee activities at the property is 562910 (Remediation Services).

Groundwater is pumped from two recovery wells (MW-27R, and MW-42R which was recently installed on between August 13 and 20, 2012) using an above-grade centrifugal self-priming pump to two 500-gallon capacity accumulation/settling tanks. These tanks provide separation/removal of particulates and non-aqueous phase liquids and allow break-up of any oil emulsions. Recovered groundwater is then pumped through two bag filters. Bag Filter No. 1 is equipped with an oil-absorbing 5-micron filter bag to remove oil and provide filtration of coarse particulates. Bag Filter No. 2 is equipped with a 1-micron filter to remove fine particulates. The second filter discharges to an organo-clay vessel with 350 pounds of mixed anthracite clay and granular activated carbon. The organo-clay filter media provides for the removal of oil emulsions that may remain following settling and bag filtration. The organo-clay vessel is followed by two carbon vessels, each with 300 pounds of granular activated carbon. A remediation system process and instrumentation diagram is provided as Figure 2.

Treated groundwater is discharged to the City's sanitary sewer system via a floor drain located in the former incinerator pit in accordance with the Permit.

Flow Measurement

The hydraulic control system equipment is installed in the former incinerator pit inside the Mechanical Room and adjacent to the recovery wells. Each of the recovery wells has a maximum yield in the range of approximately one to two gallons per minute (gpm). As of the date of the quarterly discharge monitoring, a total of approximately 99,112 gallons of groundwater had been treated. The average rate of groundwater treatment since hydraulic control system startup is approximately 0.40 gpm (576 gallons per day).

The hydraulic control system does not discharge continuously. The episodic effluent discharge rate measured on June 11, 2012 was 3.0 gpm for a period of approximately 12 minutes every two hours. This equates to a total daily discharge of approximately 432 gallons of effluent. The treatment system operation and maintenance form completed on September 19, 2012 is included herein as Attachment 1.

Effluent Monitoring

TRC field scientists conducted the quarterly self-monitoring sampling event on September 19 and 20, 2012 in accordance with the Permit and the sampling, preservation, handling and analytical methods specified in 40 CFR § 136.

A total of four aqueous discharge samples were collected (one every six (6) hour period over a twenty-four (24) hour period of operation) to be representative of daily hydraulic control system operations, as outlined in Table 1 below:

Table 1
Sampling Times

Sample Number	Sample Date/Time	6 hr Time Interval
#1	9/19/2012 at 11:00 AM	10 AM – 4 PM
#2	9/19/2012 at 5:00 PM	4 PM – 10 PM
#3	9/19/2012 at 11:00 PM	10 PM – 4 AM
#4	9/20/2012 at 6:00 AM	4 AM – 10 AM

Permit prescribed analytical parameters, analytical method, and sample types are summarized in the following Table 2:

Table 2
Discharge Monitoring Parameters

Parameter	Analytical Method	Sample Type
BOD	SM 5210B	Composite
TSS	SM 2540D	Composite
Oil & Grease	EPA Method 1664A	Grab
pH	EPA Method 150.1	Grab
PCBs	EPA Method 608	Composite
VOCs	EPA Method 624	Composite

Notes:
BOD – Biological Oxygen Demand
TSS – Total Suspended Solids
PCBs – Polychlorinated Biphenyls
VOCs – Volatile Organic Compounds

Individual grab samples (pH and Oil & Grease) and individual aliquots for composite samples were collected approximately every six hours. Time proportioned Biological Oxygen Demand (BOD), Total Suspended Solids (TSS), and Polychlorinated Biphenyl (PCB) samples were composited in the field. The volatile organic compound (VOC) sample required compositing by the laboratory. As a result, four individually preserved aliquots were collected for VOCs (one per system discharge approximately every six hours for the 24-hour sampling event) and submitted to the laboratory for time proportioned compositing per EPA Method 5030.

All of the samples were kept on ice throughout the sampling event. Samples were delivered to Alpha Analytical of Westborough, Massachusetts under proper chain-of-custody for analysis.

The effluent grab, field composite and laboratory composite sample analytical results as compared to the applicable permit discharge limits are presented in Table 1. No analytical parameters were detected in excess of applicable permit discharge limits or associated laboratory reporting limits. The pH of the effluent was 6.1. The laboratory analytical data package was reviewed by TRC's Quality Assurance Chemist and is included herein as Attachment 2.

As required by of the Permit (Article IV, Part E), monitoring of wastewater characteristics more frequently than is required by the Permit must also be provided to the controlling authority. Ongoing operation and maintenance of the hydraulic control system includes regular monitoring in association with Immediate Response Action (IRA) activities under the Massachusetts Contingency Plan (MCP: 30 CMR 40.0000) and subject to Massachusetts Department of Environmental Protection (MassDEP) and United States Environmental Protection Agency (EPA) regulatory jurisdiction. The operation and maintenance activities include the collection of aqueous effluent samples for laboratory PCB and VOC analysis. A summary of effluent monitoring results from ten IRA-related sampling events between March and September 2012 are provided in Table 2.

Schedule

Quarterly self-monitoring of the effluent will continue during the one-year effective time period of the Permit. Discharge beyond this time period requires submittal and approval of an additional permit application.

Due to the relatively low rate and periodic nature of the effluent discharges associated with current operation of the hydraulic control system, TRC requested a reduction in the number of composite aliquots collected during future quarterly self-monitoring events. On July 2, 2012, the DPI approved an alternative sampling frequency and issued revised permit conditions. Per the revised Permit, during future quarterly self-monitoring events composite sample aliquots will be collected, at a minimum, once every 6-hours for a 24-hour period. The collection of one aliquot per 6-hours of operation will continue to yield analytical results representative of daily system operations.

Certification

Based on the results of the June 2012 quarterly self-monitoring event, as well as analytical results from ten additional IRA-related monitoring events since system startup, the pretreatment standards are being met on a consistent basis. Sample collection, preservation, handling and analytical methods conform to the methods specified in 40 CFR § 136. No additional operation and maintenance and/or additional pretreatment is required at this time to meet the requirements of the Permit and therefore no compliance schedule is required at this time.

If you have any questions concerning this report, please do not hesitate to contact me at 978-656-3565 or via e-mail at dsullivan@trcsolutions.com.

Sincerely,

David M. Sullivan, LSP, CHMM
Senior Project Manager

cc: Cheryl Henlin; Department of Environmental Stewardship

Tables
Figures
Attachments

TABLES

Table 1: Summary of Analytical Results for Qarterly Discharge Monitoring Samples -- June and September 2012
New Bedford High School
New Bedford, Massachusetts

Analysis	Analyte	Sample ID:	EFFLUENT (GRAB)		EFFLUENT (COMPOSITE)		E-12 EFFLUENT VOAS	EFF. C-1 THRU C-4
		Sample Date:	6/11/2012	9/19/2012	6/12/2012	9/20/2012	6/12/2012	9/20/2012
		Daily Maximum*						
VOCs								
(mg/L)	Methylene chloride	N/A	NA	5.0 U	NA	NA	0.005 U	5.0 U
	1,1-Dichloroethane	N/A	NA	1.5 U	NA	NA	0.0015 U	1.5 U
	Chloroform	N/A	NA	1.5 U	NA	NA	0.0015 U	1.5 U
	Carbon tetrachloride	N/A	NA	1.0 U	NA	NA	0.001 U	1.0 U
	1,2-Dichloropropane	N/A	NA	3.5 U	NA	NA	0.0035 U	3.5 U
	Dibromochloromethane	N/A	NA	1.0 U	NA	NA	0.001 U	1.0 U
	1,1,2-Trichloroethane	N/A	NA	1.5 U	NA	NA	0.0015 U	1.5 U
	2-Chloroethylvinyl ether	N/A	NA	10 U	NA	NA	0.01 U	10 U
	Tetrachloroethene	N/A	NA	1.5 U	NA	NA	0.0015 U	1.5 U
	Chlorobenzene	N/A	NA	3.5 U	NA	NA	0.0035 U	3.5 U
	Trichlorofluoromethane	N/A	NA	5.0 U	NA	NA	0.005 U	5.0 U
	1,2-Dichloroethane	N/A	NA	1.5 U	NA	NA	0.0015 U	1.5 U
	1,1,1-Trichloroethane	N/A	NA	2.0 U	NA	NA	0.002 U	2.0 U
	Bromodichloromethane	N/A	NA	1.0 U	NA	NA	0.001 U	1.0 U
	trans-1,3-Dichloropropene	N/A	NA	1.5 U	NA	NA	0.0015 U	1.5 U
	cis-1,3-Dichloropropene	N/A	NA	1.5 U	NA	NA	0.0015 U	1.5 U
	Bromoform	N/A	NA	1.0 U	NA	NA	0.001 U	1.0 U
	1,1,2,2-Tetrachloroethane	N/A	NA	1.0 U	NA	NA	0.001 U	1.0 U
	Benzene	N/A	NA	1.0 U	NA	NA	0.001 U	1.0 U
	Toluene	N/A	NA	1.0 U	NA	NA	0.001 U	1.0 U
	Ethylbenzene	N/A	NA	1.0 U	NA	NA	0.001 U	1.0 U
	Chloromethane	N/A	NA	10 U	NA	NA	0.01 U	10 U
	Bromomethane	N/A	NA	5.0 U	NA	NA	0.005 U	5.0 U
	Vinyl chloride	N/A	NA	**7.9**	NA	NA	0.002 U	**6.1**
	Chloroethane	N/A	NA	2.0 U	NA	NA	0.002 U	2.0 U
	1,1-Dichloroethene	N/A	NA	1.0 U	NA	NA	0.001 U	1.0 U
	trans-1,2-Dichloroethene	N/A	NA	1.5 U	NA	NA	0.0015 U	1.5 U
	cis-1,2-Dichloroethene	N/A	NA	1.0 U	NA	NA	0.001 U	1.0 U
	Trichloroethene	N/A	NA	1.0 U	NA	NA	0.001 U	1.0 U
	1,2-Dichlorobenzene	N/A	NA	5.0 U	NA	NA	0.005 U	5.0 U
	1,3-Dichlorobenzene	N/A	NA	5.0 U	NA	NA	0.005 U	5.0 U
	1,4-Dichlorobenzene	N/A	NA	5.0 U	NA	NA	0.005 U	5.0 U
	p/m-Xylene	N/A	NA	2.0 U	NA	NA	0.002 U	2.0 U
	o-xylene	N/A	NA	1.0 U	NA	NA	0.001 U	1.0 U
	Xylene (Total)	N/A	NA	2.0 U	NA	NA	0.002 U	2.0 U
	Styrene	N/A	NA	1.0 U	NA	NA	0.001 U	1.0 U
	Acetone	N/A	NA	10 U	NA	NA	0.01 U	10 U
	Carbon disulfide	N/A	NA	5.0 U	NA	NA	0.005 U	5.0 U
	2-Butanone	N/A	NA	10 U	NA	NA	0.01 U	10 U
	Vinyl acetate	N/A	NA	20 U	NA	NA	0.02 U	20 U
	4-Methyl-2-pentanone	N/A	NA	10 U	NA	NA	0.01 U	10 U
	2-Hexanone	N/A	NA	10 U	NA	NA	0.01 U	10 U
	Acrolein	N/A	NA	8.0 U	NA	NA	0.008 U	8.0 U
	Acrylonitrile	N/A	NA	10 U	NA	NA	0.01 U	10 U
	Dibromomethane	N/A	NA	1.0 U	NA	NA	0.001 U	1.0 U
PCBs								
(ug/L)	Aroclor 1016	N/A	NA	NA	0.25 U	0.25 U	NA	NA
	Aroclor 1221	N/A	NA	NA	0.25 U	0.25 U	NA	NA
	Aroclor 1232	N/A	NA	NA	0.25 U	0.25 U	NA	NA
	Aroclor 1242	N/A	NA	NA	0.25 U	0.25 U	NA	NA
	Aroclor 1248	N/A	NA	NA	0.25 U	0.25 U	NA	NA
	Aroclor 1254	N/A	NA	NA	0.25 U	0.25 U	NA	NA
	Aroclor 1260	N/A	NA	NA	0.25 U	0.25 U	NA	NA
	Total PCBs	5	NA	NA	0.25 U	0.25 U	NA	NA
General Chemistry								
(s.u.)	pH	5.5-11.0	**6.0**	**6.1**	NA	NA	NA	NA
(mg/L)	Oil & Grease	100	4.4 U	4.0 U	NA	NA	NA	NA
(mg/L)	Solids, Total Suspended	N/A	NA	NA	5.0 U	**6.5**	NA	NA
(mg/L)	BOD, 5 day	N/A	NA	2.0 U	2.0 U	2.0 U	NA	NA

Notes:
s.u. - Standard unit.
mg/L - milligrams per liter.
ug/L - micrograms per liter.
NA - Sample not analyzed for the listed analyte.
N/A - Not applicable.
U - Compound was not detected at specified quantitation limit.
Values in **Bold** indicate the compound was detected.
VOCs - Volatile Organic Compounds.
PCBs - Polychlorinated Biphenyls.
* - City of New Bedford Industrial Discharge Permit number S-123.

Table 2: Summary of Hydraulic Control System Results for Water Samples - 2012
New Bedford High School
New Bedford, Massachusetts

Analysis	Analyte	Sample Port:	SP-7									
		Sample ID:	EFFLUENT	EFFLUENT	EFFLUENT	EFFLUENT	EFFLUENT	EFFLUENT	EFFLUENT	EFFLUENT	EFFLUENT	EFFLUENT
		Sample Date:	3/20/2012	3/27/2012	4/3/2012	4/10/2012	4/17/2012	5/14/2012	6/11/2012	7/16/2012	8/21/2012	9/18/2012
		Limits*										
VOCs												
(ug/L)	Methylene chloride	N/A	2.0 U	2.0 U	2.0 U	2.0 U	2.0 U	2.0 U	2.0 U	2.0 U	2.0 U	2.0 U
	1,1-Dichloroethane	N/A	1.0 U	1.0 U	1.0 U	1.0 U	1.0 U	1.0 U	1.0 U	1.0 U	1.0 U	1.0 U
	Chloroform	N/A	1.0 U	1.0 U	1.0 U	1.0 U	1.0 U	1.0 U	1.0 U	1.0 U	1.0 U	1.0 U
	Carbon tetrachloride	N/A	1.0 U	1.0 U	1.0 U	1.0 U	1.0 U	1.0 U	1.0 U	1.0 U	1.0 U	1.0 U
	1,2-Dichloropropane	N/A	1.0 U	1.0 U	1.0 U	1.0 U	1.0 U	1.0 U	1.0 U	1.0 U	1.0 U	1.0 U
	Dibromochloromethane	N/A	1.0 U	1.0 U	1.0 U	1.0 U	1.0 U	1.0 U	1.0 U	1.0 U	1.0 U	1.0 U
	1,1,2-Trichloroethane	N/A	1.0 U	1.0 U	1.0 U	1.0 U	1.0 U	1.0 U	1.0 U	1.0 U	1.0 U	1.0 U
	Tetrachloroethene	N/A	1.0 U	1.0 U	1.0 U	1.0 U	1.0 U	1.0 U	1.0 U	1.0 U	1.0 U	1.0 U
	Chlorobenzene	N/A	1.0 U	1.0 U	1.0 U	1.0 U	1.0 U	1.0 U	1.0 U	1.0 U	1.0 U	1.0 U
	Trichlorofluoromethane	N/A	2.0 U	2.0 U	2.0 U	2.0 U	2.0 U	2.0 U	2.0 U	2.0 U	2.0 U	2.0 U
	1,2-Dichloroethane	N/A	1.0 U	1.0 U	1.0 U	1.0 U	1.0 U	1.0 U	1.0 U	1.0 U	1.0 U	1.0 U
	1,1,1-Trichloroethane	N/A	1.0 U	1.0 U	1.0 U	1.0 U	1.0 U	1.0 U	1.0 U	1.0 U	1.0 U	1.0 U
	Bromodichloromethane	N/A	1.0 U	1.0 U	1.0 U	1.0 U	1.0 U	1.0 U	1.0 U	1.0 U	1.0 U	1.0 U
	trans-1,3-Dichloropropene	N/A	0.50 U	0.50 U	0.50 U	0.50 U	0.50 U	0.50 U	0.50 U	0.50 U	0.50 U	0.50 U
	cis-1,3-Dichloropropene	N/A	0.50 U	0.50 U	0.50 U	0.50 U	0.50 U	0.50 U	0.50 U	0.50 U	0.50 U	0.50 U
	1,1-Dichloropropene	N/A	2.0 U	2.0 U	2.0 U	2.0 U	2.0 U	2.0 U	2.0 U	2.0 U	2.0 U	2.0 U
	Bromoform	N/A	2.0 U	2.0 U	2.0 U	2.0 U	2.0 U	2.0 U	2.0 U	2.0 U	2.0 U	2.0 U
	1,1,2,2-Tetrachloroethane	N/A	1.0 U	1.0 U	1.0 U	1.0 U	1.0 U	1.0 U	1.0 U	1.0 U	1.0 U	1.0 U
	Benzene	N/A	0.50 U	0.50 U	0.50 U	0.50 U	0.50 U	0.50 U	0.50 U	0.50 U	0.50 U	0.50 U
	Toluene	N/A	1.0 U	1.0 U	1.0 U	1.0 U	1.0 U	1.0 U	1.0 U	1.0 U	1.0 U	1.0 U
	Ethylbenzene	N/A	1.0 U	1.0 U	1.0 U	1.0 U	1.0 U	1.0 U	1.0 U	1.0 U	1.0 U	1.0 U
	Chloromethane	N/A	2.0 U	2.0 U	2.0 U	2.0 U	2.0 U	2.0 U	2.0 U	2.0 U	2.0 U	2.0 U
	Bromomethane	N/A	2.0 U	2.0 U	2.0 U	2.0 U	2.0 U	2.0 U	2.0 U	2.0 U	2.0 U	2.0 U
	Vinyl chloride	N/A	1.0 U	1.0 U	1.0 U	1.0 U	1.0 U	1.0 U	1.0 U	1.0 U	1.0 U	**8.8**
	Chloroethane	N/A	2.0 U	2.0 U	2.0 U	2.0 U	2.0 U	2.0 U	2.0 U	2.0 U	2.0 U	2.0 U
	1,1-Dichloroethene	N/A	1.0 U	1.0 U	1.0 U	1.0 U	1.0 U	1.0 U	1.0 U	1.0 U	1.0 U	1.0 U
	trans-1,2-Dichloroethene	N/A	1.0 U	1.0 U	1.0 U	1.0 U	1.0 U	1.0 U	1.0 U	1.0 U	1.0 U	1.0 U
	Trichloroethene	N/A	1.0 U	1.0 U	1.0 U	1.0 U	1.0 U	1.0 U	1.0 U	1.0 U	1.0 U	1.0 U
	1,2-Dichlorobenzene	N/A	1.0 U	1.0 U	1.0 U	1.0 U	1.0 U	1.0 U	1.0 U	1.0 U	1.0 U	1.0 U
	1,3-Dichlorobenzene	N/A	1.0 U	1.0 U	1.0 U	1.0 U	1.0 U	1.0 U	1.0 U	1.0 U	1.0 U	1.0 U
	1,4-Dichlorobenzene	N/A	1.0 U	1.0 U	1.0 U	1.0 U	1.0 U	1.0 U	1.0 U	1.0 U	1.0 U	1.0 U
	Methyl tert butyl ether	N/A	2.0 U	2.0 U	2.0 U	2.0 U	2.0 U	2.0 U	2.0 U	2.0 U	2.0 U	2.0 U
	p/m-Xylene	N/A	2.0 U	2.0 U	2.0 U	2.0 U	2.0 U	2.0 U	2.0 U	2.0 U	2.0 U	2.0 U
	o-Xylene	N/A	1.0 U	1.0 U	1.0 U	1.0 U	1.0 U	1.0 U	1.0 U	1.0 U	1.0 U	1.0 U
	cis-1,2-Dichloroethene	N/A	1.0 U	1.0 U	1.0 U	1.0 U	1.0 U	1.0 U	1.0 U	1.0 U	1.0 U	1.0 U
	Dibromomethane	N/A	2.0 U	2.0 U	2.0 U	2.0 U	2.0 U	2.0 U	2.0 U	2.0 U	2.0 U	2.0 U
	1,2,3-Trichloropropane	N/A	2.0 U	2.0 U	2.0 U	2.0 U	2.0 U	2.0 U	2.0 U	2.0 U	2.0 U	2.0 U
	Styrene	N/A	1.0 U	1.0 U	1.0 U	1.0 U	1.0 U	1.0 U	1.0 U	1.0 U	1.0 U	1.0 U
	Dichlorodifluoromethane	N/A	2.0 U	2.0 U	2.0 U	2.0 U	2.0 U	2.0 U	2.0 U	2.0 U	2.0 U	2.0 U
	Acetone	N/A	**98**	**17.0**	5.0 U	5.0 U	5.0 U	5.0 U	5.0 U	5.0 U	5.0 U	5.0 U
	Carbon disulfide	N/A	2.0 U	2.0 U	2.0 U	2.0 U	2.0 U	2.0 U	2.0 U	2.0 U	2.0 U	2.0 U
	2-Butanone	N/A	**6.8**	5.0 U	5.0 U	5.0 U	5.0 U	5.0 U	5.0 U	5.0 U	5.0 U	5.0 U
	4-Methyl-2-pentanone	N/A	5.0 U	5.0 U	5.0 U	5.0 U	5.0 U	5.0 U	5.0 U	5.0 U	5.0 U	5.0 U
	2-Hexanone	N/A	5.0 U	5.0 U	5.0 U	5.0 U	5.0 U	5.0 U	5.0 U	5.0 U	5.0 U	5.0 U
	Bromochloromethane	N/A	2.0 U	2.0 U	2.0 U	2.0 U	2.0 U	2.0 U	2.0 U	2.0 U	2.0 U	2.0 U
	Tetrahydrofuran	N/A	**11.0**	**14.0**	**14.0**	**17.0**	**16.0**	**8.9**	**8.5**	**9.0**	**5.8**	5.0 U
	2,2-Dichloropropane	N/A	2.0 U	2.0 U	2.0 U	2.0 U	2.0 U	2.0 U	2.0 U	2.0 U	2.0 U	2.0 U
	1,2-Dibromoethane	N/A	2.0 U	2.0 U	2.0 U	2.0 U	2.0 U	2.0 U	2.0 U	2.0 U	2.0 U	2.0 U
	1,3-Dichloropropane	N/A	2.0 U	2.0 U	2.0 U	2.0 U	2.0 U	2.0 U	2.0 U	2.0 U	2.0 U	2.0 U
	1,1,1,2-Tetrachloroethane	N/A	1.0 U	1.0 U	1.0 U	1.0 U	1.0 U	1.0 U	1.0 U	1.0 U	1.0 U	1.0 U
	Bromobenzene	N/A	2.0 U	2.0 U	2.0 U	2.0 U	2.0 U	2.0 U	2.0 U	2.0 U	2.0 U	2.0 U
	n-Butylbenzene	N/A	2.0 U	2.0 U	2.0 U	2.0 U	2.0 U	2.0 U	2.0 U	2.0 U	2.0 U	2.0 U
	sec-Butylbenzene	N/A	2.0 U	2.0 U	2.0 U	2.0 U	2.0 U	2.0 U	2.0 U	2.0 U	2.0 U	2.0 U
	tert-Butylbenzene	N/A	2.0 U	2.0 U	2.0 U	2.0 U	2.0 U	2.0 U	2.0 U	2.0 U	2.0 U	2.0 U
	o-Chlorotoluene	N/A	2.0 U	2.0 U	2.0 U	2.0 U	2.0 U	2.0 U	2.0 U	2.0 U	2.0 U	2.0 U
	p-Chlorotoluene	N/A	2.0 U	2.0 U	2.0 U	2.0 U	2.0 U	2.0 U	2.0 U	2.0 U	2.0 U	2.0 U
	1,2-Dibromo-3-chloropropane	N/A	2.0 U	2.0 U	2.0 U	2.0 U	2.0 U	2.0 U	2.0 U	2.0 U	2.0 U	2.0 U
	Hexachlorobutadiene	N/A	0.60 U	0.60 U	0.60 U	0.60 U	0.60 U	0.60 U	0.60 U	0.60 U	0.60 U	0.60 U
	Isopropylbenzene	N/A	2.0 U	2.0 U	2.0 U	2.0 U	2.0 U	2.0 U	2.0 U	2.0 U	2.0 U	2.0 U
	p-Isopropyltoluene	N/A	2.0 U	2.0 U	2.0 U	2.0 U	2.0 U	2.0 U	2.0 U	2.0 U	2.0 U	2.0 U
	Naphthalene	N/A	2.0 U	2.0 U	2.0 U	2.0 U	2.0 U	2.0 U	2.0 U	2.0 U	2.0 U	2.0 U
	n-Propylbenzene	N/A	2.0 U	2.0 U	2.0 U	2.0 U	2.0 U	2.0 U	2.0 U	2.0 U	2.0 U	2.0 U
	1,2,3-Trichlorobenzene	N/A	2.0 U	2.0 U	2.0 U	2.0 U	2.0 U	2.0 U	2.0 U	2.0 U	2.0 U	2.0 U
	1,2,4-Trichlorobenzene	N/A	2.0 U	2.0 U	2.0 U	2.0 U	2.0 U	2.0 U	2.0 U	2.0 U	2.0 U	2.0 U
	1,3,5-Trimethylbenzene	N/A	2.0 U	2.0 U	2.0 U	2.0 U	2.0 U	2.0 U	2.0 U	2.0 U	2.0 U	2.0 U
	1,2,4-Trimethylbenzene	N/A	2.0 U	2.0 U	2.0 U	2.0 U	2.0 U	2.0 U	2.0 U	2.0 U	2.0 U	2.0 U
	Ethyl ether	N/A	2.0 U	2.0 U	2.0 U	2.0 U	2.0 U	2.0 U	2.0 U	2.0 U	2.0 U	2.0 U
	Isopropyl Ether	N/A	2.0 U	2.0 U	2.0 U	2.0 U	2.0 U	2.0 U	2.0 U	2.0 U	2.0 U	2.0 U
	Ethyl-Tert-Butyl-Ether	N/A	2.0 U	2.0 U	2.0 U	2.0 U	2.0 U	2.0 U	2.0 U	2.0 U	2.0 U	2.0 U
	Tertiary-Amyl Methyl Ether	N/A	2.0 U	2.0 U	2.0 U	2.0 U	2.0 U	2.0 U	2.0 U	2.0 U	2.0 U	2.0 U
	1,4-Dioxane	N/A	250 U	250 U	250 U	250 U	250 U	250 U	250 U	250 U	250 U	250 U
VOCs - TICs												
(ug/L)	Sulfur Dioxide	N/A	NA	NA	NA	NA	NA	NA	NA	NA	NA	NA
	Unknown aldehyde	N/A	NA	NA	NA	NA	NA	NA	NA	NA	NA	NA
	Unknown Substituted Alkanes	N/A	NA	NA	NA	NA	NA	NA	NA	NA	NA	NA
	Unknown Substituted Alkenes	N/A	NA	NA	NA	NA	NA	NA	NA	NA	NA	NA
	Unknown	N/A	NA	NA	NA	NA	NA	NA	NA	NA	NA	NA
PCBs												
(ug/L)	Aroclor 1016	N/A	0.250 U	0.250 U	0.250 U	0.252 U	0.250 U	0.250 U	0.248 U	0.250 U	0.250 U	0.250 U
	Aroclor 1221	N/A	0.250 U	0.250 U	0.250 U	0.252 U	0.250 U	0.250 U	0.248 U	0.250 U	0.250 U	0.250 U
	Aroclor 1232	N/A	0.250 U	0.250 U	0.250 U	0.252 U	0.250 U	0.250 U	0.248 U	0.250 U	0.250 U	0.250 U
	Aroclor 1242	N/A	0.250 U	0.250 U	0.250 U	0.252 U	0.250 U	0.250 U	0.248 U	0.250 U	0.250 U	0.250 U
	Aroclor 1248	N/A	0.250 U	0.250 U	0.250 U	0.252 U	0.250 U	0.250 U	0.248 U	0.250 U	0.250 U	0.250 U
	Aroclor 1254	N/A	0.250 U	0.250 U	0.250 U	0.252 U	0.250 U	0.250 U	0.248 U	0.250 U	0.250 U	0.250 U
	Aroclor 1260	N/A	0.250 U	0.250 U	0.250 U	0.252 U	0.250 U	0.250 U	0.248 U	0.250 U	0.250 U	0.250 U
	Aroclor 1262	N/A	0.250 U	0.250 U	0.250 U	0.252 U	0.250 U	0.250 U	0.248 U	0.250 U	0.250 U	0.250 U
	Aroclor 1268	N/A	0.250 U	0.250 U	0.250 U	0.252 U	0.250 U	0.250 U	0.248 U	0.250 U	0.250 U	0.250 U
	Total PCBs	5	0.250 U	0.250 U	0.250 U	0.252 U	0.250 U	0.250 U	0.248 U	0.250 U	0.250 U	0.250 U

Notes:
ug/L - micrograms per liter.
NJ - Presumptive evidence of compound.
J - Estimated value.
NA - Sample not analyzed for the listed analyte.
N/A - Not applicable.
U - Compound was not detected at specified quantitation limit.
Values in **Bol**d indicate the compound was detected.
Values shown in Bold and shaded type exceed the listed criteria.
VOCs - Volatile Organic Compounds.
PCBs - Polychlorinated Biphenyls.
TICs - Tentatively identified compounds.
* - City of New Bedford Industrial Discharge Permit number S-123.

FIGURES

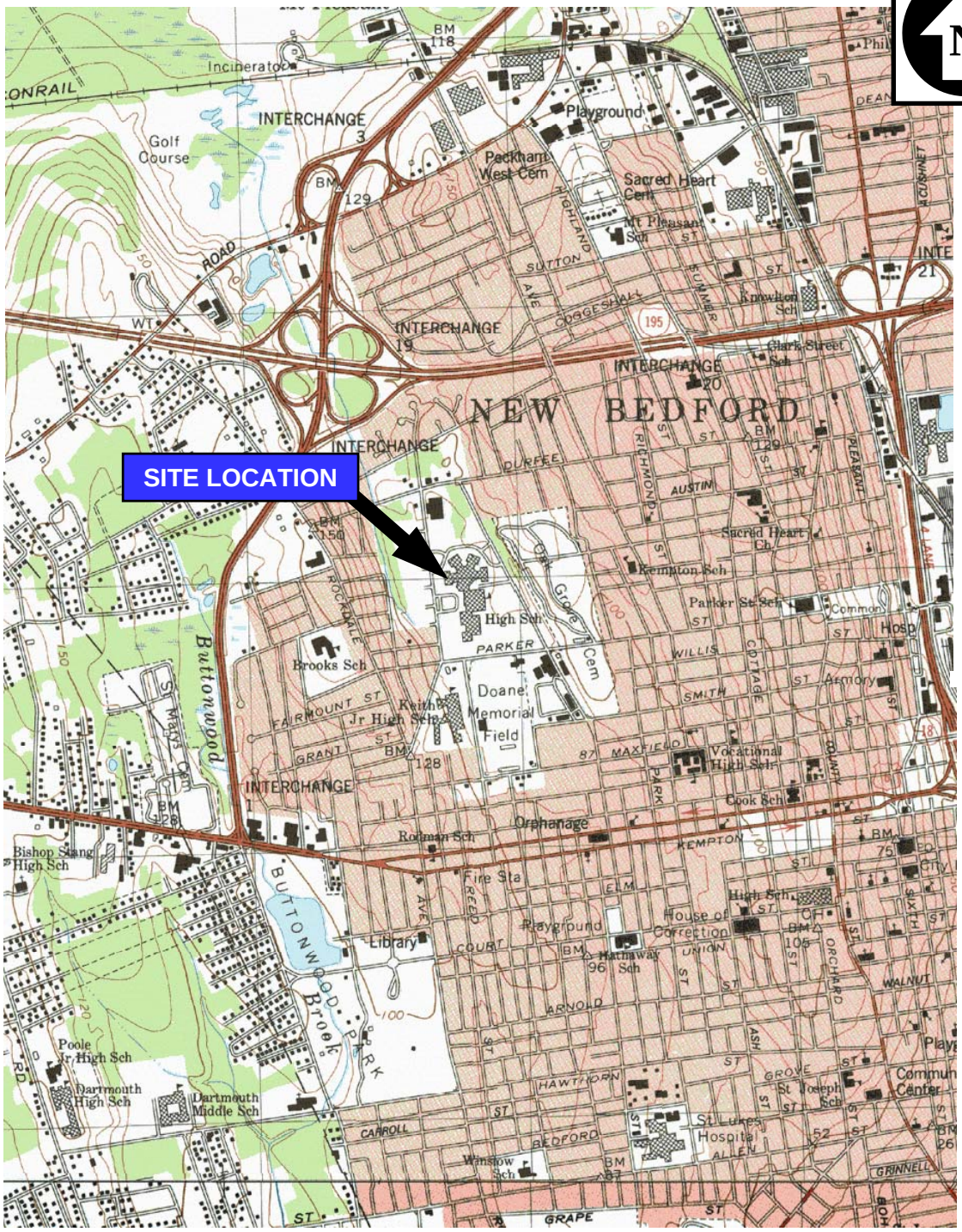

BASE MAP IS A PORTION OF THE FOLLOWING 7.5' X 15' USGS TOPOGRAPHIC QUADRANGLES: NEW BEDFORD NORTH, MA, 1979; NEW BEDFORD SOUTH, MA 1977

0 1000 2000 3000

scale in feet

QUADRANGLE LOCATION

NEW BEDFORD HIGH SCHOOL
NEW BEDFORD, MASSACHUSETTS

SITE LOCATION MAP

TRC
Wannalancit Mills
650 Suffolk Street
Lowell, MA 01854
978-970-5600

FIGURE 1

Drawn: HWB	SCALE: AS SHOWN
Checked: DS	Date: OCT 2008

T:\E_CAD\115058\TOPO NBHS.ppt

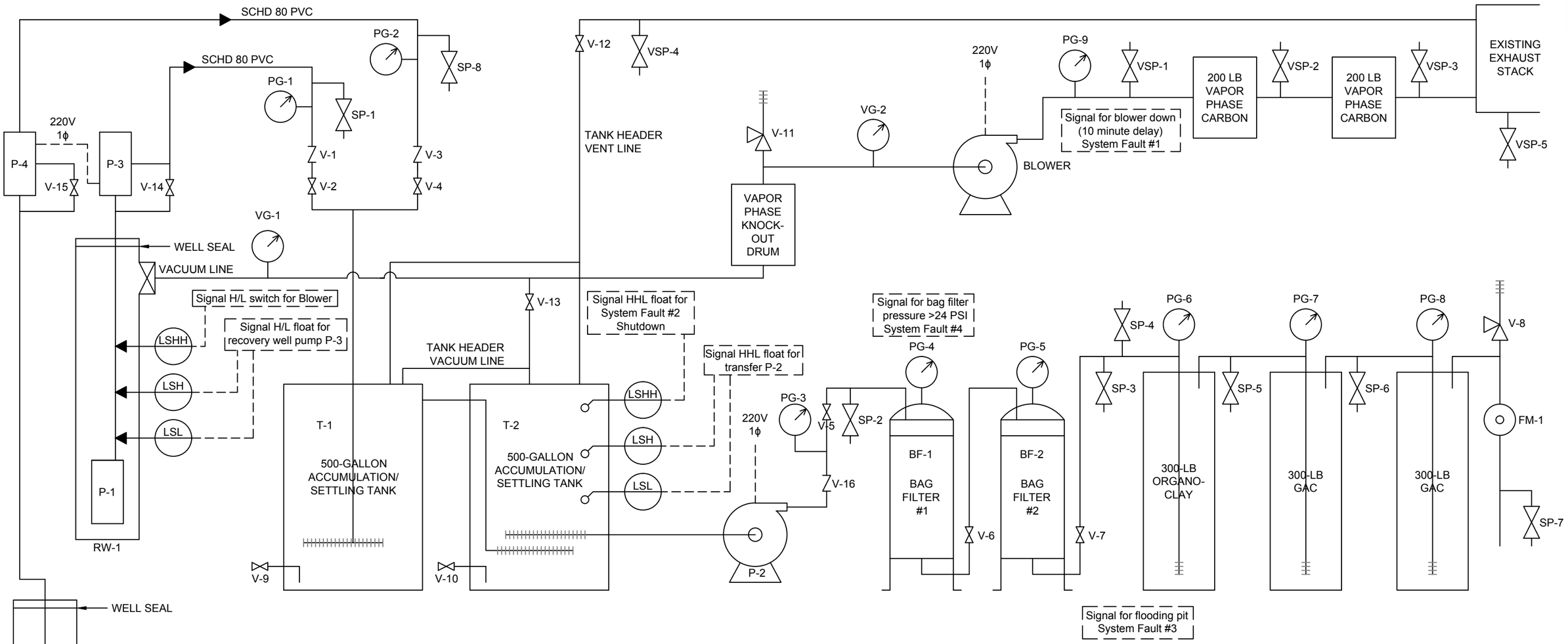

LEGEND:

LSL	LEVEL SWITCH LOW	SP	SAMPLE PORT	P-1	SUBMERSIBLE PUMP (TEMPORARILY DISCONNECTED DUE TO SILTATION)
LSH	LEVEL SWITCH HIGH		BALL VALVE	P-2	TRANSFER PUMP
LSHH	LEVEL SWITCH HIGH HIGH		CHECK VALVE	P-3	CENTRIFUGAL PUMP
	PRESSURE GAUGE		VACUUM RELIEF	P-4	CENTRIFUGAL PUMP
FM-1	FLOW METER		DISTRIBUTOR	GAC	GRANULAR ACTIVATED CARBON
				220V 1ϕ	220 VOLTS, SINGLE PHASE

NEW BEDFORD HIGH SCHOOL
NEW BEDFORD, MASSACHUSETTS

PROCESS AND INSTRUMENTATION DIAGRAM

TRC
Wannalancit Mills
650 Suffolk Street
Lowell, MA 01854
(978) 970-5600

FIGURE 2

DRAWN BY: HWB
CHECKED BY: JCF
DATE: SEPT 2012

FILE: T:\E_CAD\115058\PROCESS DIA NBHS - 9-12.dwg

Attachment 1

Treatment System Operation & Maintenance Form
(September 19, 2012)

Date: 9/18/12
Initials: JP / JCF

Treatment System Operation & Maintenance

New Bedford High School - Release Tracking Number 4-22409
230 Hathaway Boulevard, New Bedford, Massachusetts

System Run Time	4148	(hours)	Flow Meter	454927	(Gal.)	Time 15:00
	Startup since 3/19/12 @ 15:00		(FM - 1)	99112	Gal. since system startup	
				0.40	~ average GPM rate treated	
Discharge Pressure	10.5"	(in. of water)	Temperature	91	(°F) Ambient Air	
(PG - 9)			(T - 1)	102	(°F) Vapor	

	AQUEOUS	Valve Position (% open)	Pressure PSI				Technician
Influent Line	PG-1	50%	19-20	Pressures after	Date	9/18/2012	J. Patinskas
Influent Line	PG-2	50%	14-15	Bag filter change			
Pre bag filter	PG-3	20%	34	33			
Bag Filter 1	PG-4	100%	23	9.5			
Bag Filter 2	PG-5	100%	17	9			
Clay bed	PG-6		7.5	8.5			
GAC Bed 1	PG-7		0-0.5	0.5			
GAC Bed 2	PG-8		0-0.5	0.25			
Influent Valve	V-2	~50%	N/A				
Effluent Valve	V-5	~20%	N/A				
Effluent totalizer	FM-1	454927	@ 15:00				
		Turbidity NTU	Headspace PPMv				
Influent Tank 1	Combined	35.6	61				
Pre-bag filter	SP-2	33.78	60				
Post bag filter	SP-3	12.76	38				
Pre Clay bed	SP-4						
Pre GAC Bed 1	SP-5						
Pre GAC Bed 2	SP-6	0.58	6	Aq. Samp 3			
Effluent	SP-7	0.26	0	Aq. Samp 4			
Effluent Pumping Rate	Timed FM-1	3 gpm					

	VAPOR/AIR	Vac. or Pressure (" of water)	Vapor Concentration (ppm v)
VS-1 Inlet	VSP-1	-	0
-Intra GAC beds	VSP-2	-	0
VS-2 Outlet	VSP-3	-	0
-Tank header	VSP-4	-0.03	1.6-2.3
Stack base	VSP-5	-0.015	0
Inlet VAC	VG-1	-5.5	
Blower VAC	VG-2	-19.5-20	
Outlet Discharge Pressure	PG-9	10.5	

INFLUENT - aqueous		
Well ID	Headspace	Turbidity
Aq. Samp 1 MW-27R	17	23.5
Aq. Samp 2 MW-42R	66	11.39

Check Air Filter: Yes — Condition: Ok - no filter element

Check Holding Tanks: Yes — Condition: Tank 1 - slight odor; Tank 2 - slight odor

Check Fault Controls: Yes — Condition: OK

Zone #4 pressure fault increased to 24 psi.

Comments: New bag filters installed in bag filter untis # 1 and #2. Timed influent MW-27R @0.19 gpm MW-42R @0.53 gpm. ~0.72 gpm tota

785 gal. treated during ramp up + op.= 99897
Startup @ 355815 99112 Gal. treated
Effluent Totalizer : 454927 15:00
Aqueous Samples 9/18/2012 @ Time
Samp 1: 11:30 VOCs & PCBs MW-27R
Samp 2: 12:00 VOCs & PCBs MW-42R
Samp 3: 14:15 VOCs & PCBs Intra Carbon
Samp 4: 14:30 VOCs & PCBs Effluent
9/19/2012 24-Hr. composite quarterly sample effluent
Oil/Grease VOCs / PCBs / BOD / TSS / pH
Vapor Samples Vapor Inlet
Samp 1: 10:12-10:26/10:39-14:39 TO-15 & PCBs by TO-10A
Samp 2: 10:14-10:26/10:40-14:40 VOCs & PCBs (MW-27R) SP-1
Vapor Outlet (MW-42R) SP-8
Notes: SP-4
PCB puff media 4 hr @ 5L/min SP-6
VOCs 2.7L SUMMAs 195-200 ml/min SP-7

Date	Well	DTW	~TD	Vac.	Headspace
9/18/2012	MW-27R	7.5'- ~8.2'	~12'	-1.5	17
9/18/2012	MW-42R	7.93' - ~9.4'	~12'	-0.03	66
9/19/2012	MW-27D	3.75	~17'	N/A	0
9/19/2012	MW-33	3.74	~9'	-0.07-0.08	0
9/19/2012	MW-32	3.74	~9'	-0.3	2.6
9/19/2012	MW-28	3.84	~12'	-0.02-0.025	27
9/19/2012	PVP-6	N/A	N/A	-0.045-0.05	N/A
9/19/2012	MW-40	NR	~11.25'	NR	NR
9/19/2012	MW-41	4.05	~11.25'	-0.03	127
9/19/2012	MW-31	3.74	~9'	-0.005-0.01	0

Time	Temp.	Sp. Cond	DO	pH	ORP
11:15	23.09	428	0.62	5.67	69
11:45	24.05	394	0.84	5.96	29
13:20	25.11	400	1.05	5.74	142
13:30	25.57	420	0.11	5.89	-30
13:40	25.71	420	0.1	5.94	-30

Attachment 2

Laboratory Data Package

ANALYTICAL REPORT

Lab Number:	L1216803
Client:	TRC Environmental Consultants Wannalancit Mills 650 Suffolk Street Lowell, MA 01854
ATTN:	David Sullivan
Phone:	(978) 656-3565
Project Name:	NBHS IRA 24HR POTW
Project Number:	115058
Report Date:	09/27/12

The original project report/data package is held by Alpha Analytical. This report/data package is paginated and should be reproduced only in its entirety. Alpha Analytical holds no responsibility for results and/or data that are not consistent with the original.

Certifications & Approvals: MA (M-MA086), NY (11148), CT (PH-0574), NH (2003), NJ NELAP (MA935), RI (LAO00065), ME (MA00086), PA (68-03671), USDA (Permit #P-330-11-00240), NC (666), TX (T104704476), DOD (L2217), US Army Corps of Engineers.

Eight Walkup Drive, Westborough, MA 01581-1019
508-898-9220 (Fax) 508-898-9193 800-624-9220 - www.alphalab.com

Project Name: NBHS IRA 24HR POTW
Project Number: 115058

Lab Number: L1216803
Report Date: 09/27/12

Alpha Sample ID	Client ID	Sample Location	Collection Date/Time
L1216803-01	EFFLUENT (GRAB)	NEW BEDFORD, MA	09/19/12 11:00
L1216803-02	EFFLUENT (COMP)	NEW BEDFORD, MA	09/20/12 06:00
L1216803-03	EFF. C-1 THRU C-4	NEW BEDFORD, MA	09/20/12 06:00

Project Name: NBHS IRA 24HR POTW **Lab Number:** L1216803
Project Number: 115058 **Report Date:** 09/27/12

Case Narrative

The samples were received in accordance with the Chain of Custody and no significant deviations were encountered during the preparation or analysis unless otherwise noted. Sample Receipt, Container Information, and the Chain of Custody are located at the back of the report.

Results contained within this report relate only to the samples submitted under this Alpha Lab Number and meet all of the requirements of NELAC, for all NELAC accredited parameters. The data presented in this report is organized by parameter (i.e. VOC, SVOC, etc.). Sample specific Quality Control data (i.e. Surrogate Spike Recovery) is reported at the end of the target analyte list for each individual sample, followed by the Laboratory Batch Quality Control at the end of each parameter. If a sample was re-analyzed or re-extracted due to a required quality control corrective action and if both sets of data are reported, the Laboratory ID of the re-analysis or re-extraction is designated with an "R" or "RE", respectively. When multiple Batch Quality Control elements are reported (e.g. more than one LCS), the associated samples for each element are noted in the grey shaded header line of each data table. Any Laboratory Batch, Sample Specific % recovery or RPD value that is outside the listed Acceptance Criteria is bolded in the report. Performance criteria for CAM and RCP methods allow for some LCS compound failures to occur and still be within method compliance. In these instances, the specific failures are not narrated but are noted in the associated QC table. This information is also incorporated in the Data Usability format for our Data Merger tool where it can be reviewed along with any associated usability implications. Soil/sediments, solids and tissues are reported on a dry weight basis unless otherwise noted. Definitions of all data qualifiers and acronyms used in this report are provided in the Glossary located at the back of the report.

In reference to questions H (CAM) or 4 (RCP) when "NO" is checked, the performance criteria for CAM and RCP methods allow for some quality control failures to occur and still be within method compliance. In these instances the specific failure is not narrated but noted in the associated QC table. The information is also incorporated in the Data Usability format of our Data Merger tool where it can be reviewed along with any associated usability implications.

Please see the associated ADEx data file for a comparison of laboratory reporting limits that were achieved with the regulatory Numerical Standards requested on the Chain of Custody.

HOLD POLICY
For samples submitted on hold, Alpha's policy is to hold samples free of charge for 30 days from the date the project is completed. After 30 days, we will dispose of all samples submitted including those put on hold unless you have contacted your Client Service Representative and made arrangements for Alpha to continue to hold the samples.

Please contact Client Services at 800-624-9220 with any questions.

Project Name: NBHS IRA 24HR POTW **Lab Number:** L1216803
Project Number: 115058 **Report Date:** 09/27/12

Case Narrative (continued)

Report Submission

MCP Methodologies were not required, per the client.

Volatile Organics

The WG563293-7 LCS recoveries, associated with L1216803-01 and -03, were above the acceptance criteria for Carbon tetrachloride (138%), Chloromethane (162%), and Bromomethane (170%); however, the associated samples were non-detect for these target compounds. The results of the original analysis are reported.

The WG563293-7 LCS recoveries for Vinyl chloride (137%) and 4-Methyl-2-pentanone (78%) are outside Alpha's acceptance criteria, but within the acceptance criteria specified in the method.

I, the undersigned, attest under the pains and penalties of perjury that, to the best of my knowledge and belief and based upon my personal inquiry of those responsible for providing the information contained in this analytical report, such information is accurate and complete. This certificate of analysis is not complete unless this page accompanies any and all pages of this report.

Authorized Signature: Kelly Stenstrom

Title: Technical Director/Representative Date: 09/27/12

ORGANICS

VOLATILES

Project Name: NBHS IRA 24HR POTW **Lab Number:** L1216803

Project Number: 115058 **Report Date:** 09/27/12

SAMPLE RESULTS

Lab ID:	L1216803-01	Date Collected:	09/19/12 11:00
Client ID:	EFFLUENT (GRAB)	Date Received:	09/20/12
Sample Location:	NEW BEDFORD, MA	Field Prep:	Not Specified
Matrix:	Water		
Analytical Method:	5,624		
Analytical Date:	09/27/12 11:40		
Analyst:	KL		

Parameter	Result	Qualifier	Units	RL	MDL	Dilution Factor
Volatile Organics by GC/MS - Westborough Lab						
Methylene chloride	ND		ug/l	5.0	--	1
1,1-Dichloroethane	ND		ug/l	1.5	--	1
Chloroform	ND		ug/l	1.5	--	1
Carbon tetrachloride	ND		ug/l	1.0	--	1
1,2-Dichloropropane	ND		ug/l	3.5	--	1
Dibromochloromethane	ND		ug/l	1.0	--	1
1,1,2-Trichloroethane	ND		ug/l	1.5	--	1
2-Chloroethylvinyl ether	ND		ug/l	10	--	1
Tetrachloroethene	ND		ug/l	1.5	--	1
Chlorobenzene	ND		ug/l	3.5	--	1
Trichlorofluoromethane	ND		ug/l	5.0	--	1
1,2-Dichloroethane	ND		ug/l	1.5	--	1
1,1,1-Trichloroethane	ND		ug/l	2.0	--	1
Bromodichloromethane	ND		ug/l	1.0	--	1
trans-1,3-Dichloropropene	ND		ug/l	1.5	--	1
cis-1,3-Dichloropropene	ND		ug/l	1.5	--	1
Bromoform	ND		ug/l	1.0	--	1
1,1,2,2-Tetrachloroethane	ND		ug/l	1.0	--	1
Benzene	ND		ug/l	1.0	--	1
Toluene	ND		ug/l	1.0	--	1
Ethylbenzene	ND		ug/l	1.0	--	1
Chloromethane	ND		ug/l	10	--	1
Bromomethane	ND		ug/l	5.0	--	1
Vinyl chloride	7.9		ug/l	2.0	--	1
Chloroethane	ND		ug/l	2.0	--	1
1,1-Dichloroethene	ND		ug/l	1.0	--	1
trans-1,2-Dichloroethene	ND		ug/l	1.5	--	1
cis-1,2-Dichloroethene[1]	ND		ug/l	1.0	--	1
Trichloroethene	ND		ug/l	1.0	--	1
1,2-Dichlorobenzene	ND		ug/l	5.0	--	1
1,3-Dichlorobenzene	ND		ug/l	5.0	--	1

Project Name: NBHS IRA 24HR POTW **Lab Number:** L1216803

Project Number: 115058 **Report Date:** 09/27/12

SAMPLE RESULTS

Lab ID:	L1216803-01	Date Collected:	09/19/12 11:00
Client ID:	EFFLUENT (GRAB)	Date Received:	09/20/12
Sample Location:	NEW BEDFORD, MA	Field Prep:	Not Specified

Parameter	Result	Qualifier	Units	RL	MDL	Dilution Factor
Volatile Organics by GC/MS - Westborough Lab						
1,4-Dichlorobenzene	ND		ug/l	5.0	--	1
p/m-Xylene[1]	ND		ug/l	2.0	--	1
o-xylene[1]	ND		ug/l	1.0	--	1
Xylene (Total)[1]	ND		ug/l	2.0	--	1
Styrene[1]	ND		ug/l	1.0	--	1
Acetone[1]	ND		ug/l	10	--	1
Carbon disulfide[1]	ND		ug/l	5.0	--	1
2-Butanone[1]	ND		ug/l	10	--	1
Vinyl acetate[1]	ND		ug/l	20	--	1
4-Methyl-2-pentanone[1]	ND		ug/l	10	--	1
2-Hexanone[1]	ND		ug/l	10	--	1
Acrolein[1]	ND		ug/l	8.0	--	1
Acrylonitrile[1]	ND		ug/l	10	--	1
Dibromomethane[1]	ND		ug/l	1.0	--	1

Surrogate	% Recovery	Qualifier	Acceptance Criteria
Pentafluorobenzene	96		80-120
Fluorobenzene	97		80-120
4-Bromofluorobenzene	102		80-120

Project Name: NBHS IRA 24HR POTW **Lab Number:** L1216803

Project Number: 115058 **Report Date:** 09/27/12

SAMPLE RESULTS

Lab ID:	L1216803-03	Date Collected:	09/20/12 06:00
Client ID:	EFF. C-1 THRU C-4	Date Received:	09/20/12
Sample Location:	NEW BEDFORD, MA	Field Prep:	Not Specified
Matrix:	Water		
Analytical Method:	5,624		
Analytical Date:	09/27/12 12:15		
Analyst:	KL		

Parameter	Result	Qualifier	Units	RL	MDL	Dilution Factor
Volatile Organics by GC/MS - Westborough Lab						
Methylene chloride	ND		ug/l	5.0	--	1
1,1-Dichloroethane	ND		ug/l	1.5	--	1
Chloroform	ND		ug/l	1.5	--	1
Carbon tetrachloride	ND		ug/l	1.0	--	1
1,2-Dichloropropane	ND		ug/l	3.5	--	1
Dibromochloromethane	ND		ug/l	1.0	--	1
1,1,2-Trichloroethane	ND		ug/l	1.5	--	1
2-Chloroethylvinyl ether	ND		ug/l	10	--	1
Tetrachloroethene	ND		ug/l	1.5	--	1
Chlorobenzene	ND		ug/l	3.5	--	1
Trichlorofluoromethane	ND		ug/l	5.0	--	1
1,2-Dichloroethane	ND		ug/l	1.5	--	1
1,1,1-Trichloroethane	ND		ug/l	2.0	--	1
Bromodichloromethane	ND		ug/l	1.0	--	1
trans-1,3-Dichloropropene	ND		ug/l	1.5	--	1
cis-1,3-Dichloropropene	ND		ug/l	1.5	--	1
Bromoform	ND		ug/l	1.0	--	1
1,1,2,2-Tetrachloroethane	ND		ug/l	1.0	--	1
Benzene	ND		ug/l	1.0	--	1
Toluene	ND		ug/l	1.0	--	1
Ethylbenzene	ND		ug/l	1.0	--	1
Chloromethane	ND		ug/l	10	--	1
Bromomethane	ND		ug/l	5.0	--	1
Vinyl chloride	6.1		ug/l	2.0	--	1
Chloroethane	ND		ug/l	2.0	--	1
1,1-Dichloroethene	ND		ug/l	1.0	--	1
trans-1,2-Dichloroethene	ND		ug/l	1.5	--	1
cis-1,2-Dichloroethene[1]	ND		ug/l	1.0	--	1
Trichloroethene	ND		ug/l	1.0	--	1
1,2-Dichlorobenzene	ND		ug/l	5.0	--	1
1,3-Dichlorobenzene	ND		ug/l	5.0	--	1

Project Name: NBHS IRA 24HR POTW **Lab Number:** L1216803

Project Number: 115058 **Report Date:** 09/27/12

SAMPLE RESULTS

Lab ID: L1216803-03 Date Collected: 09/20/12 06:00

Client ID: EFF. C-1 THRU C-4 Date Received: 09/20/12

Sample Location: NEW BEDFORD, MA Field Prep: Not Specified

Parameter	Result	Qualifier	Units	RL	MDL	Dilution Factor
Volatile Organics by GC/MS - Westborough Lab						
1,4-Dichlorobenzene	ND		ug/l	5.0	--	1
p/m-Xylene[1]	ND		ug/l	2.0	--	1
o-xylene[1]	ND		ug/l	1.0	--	1
Xylene (Total)[1]	ND		ug/l	2.0	--	1
Styrene[1]	ND		ug/l	1.0	--	1
Acetone[1]	ND		ug/l	10	--	1
Carbon disulfide[1]	ND		ug/l	5.0	--	1
2-Butanone[1]	ND		ug/l	10	--	1
Vinyl acetate[1]	ND		ug/l	20	--	1
4-Methyl-2-pentanone[1]	ND		ug/l	10	--	1
2-Hexanone[1]	ND		ug/l	10	--	1
Acrolein[1]	ND		ug/l	8.0	--	1
Acrylonitrile[1]	ND		ug/l	10	--	1
Dibromomethane[1]	ND		ug/l	1.0	--	1

Surrogate	% Recovery	Qualifier	Acceptance Criteria
Pentafluorobenzene	96		80-120
Fluorobenzene	96		80-120
4-Bromofluorobenzene	102		80-120

Project Name: NBHS IRA 24HR POTW **Lab Number:** L1216803

Project Number: 115058 **Report Date:** 09/27/12

Method Blank Analysis
Batch Quality Control

Analytical Method: 5,624
Analytical Date: 09/27/12 11:05
Analyst: KL

Parameter	Result	Qualifier	Units	RL	MDL
Volatile Organics by GC/MS - Westborough Lab for sample(s): 01,03 Batch: WG563293-8					
Methylene chloride	ND		ug/l	5.0	--
1,1-Dichloroethane	ND		ug/l	1.5	--
Chloroform	ND		ug/l	1.5	--
Carbon tetrachloride	ND		ug/l	1.0	--
1,2-Dichloropropane	ND		ug/l	3.5	--
Dibromochloromethane	ND		ug/l	1.0	--
1,1,2-Trichloroethane	ND		ug/l	1.5	--
2-Chloroethylvinyl ether	ND		ug/l	10	--
Tetrachloroethene	ND		ug/l	1.5	--
Chlorobenzene	ND		ug/l	3.5	--
Trichlorofluoromethane	ND		ug/l	5.0	--
1,2-Dichloroethane	ND		ug/l	1.5	--
1,1,1-Trichloroethane	ND		ug/l	2.0	--
Bromodichloromethane	ND		ug/l	1.0	--
trans-1,3-Dichloropropene	ND		ug/l	1.5	--
cis-1,3-Dichloropropene	ND		ug/l	1.5	--
Bromoform	ND		ug/l	1.0	--
1,1,2,2-Tetrachloroethane	ND		ug/l	1.0	--
Benzene	ND		ug/l	1.0	--
Toluene	ND		ug/l	1.0	--
Ethylbenzene	ND		ug/l	1.0	--
Chloromethane	ND		ug/l	10	--
Bromomethane	ND		ug/l	5.0	--
Vinyl chloride	ND		ug/l	2.0	--
Chloroethane	ND		ug/l	2.0	--
1,1-Dichloroethene	ND		ug/l	1.0	--
trans-1,2-Dichloroethene	ND		ug/l	1.5	--
cis-1,2-Dichloroethene[1]	ND		ug/l	1.0	--
Trichloroethene	ND		ug/l	1.0	--
1,2-Dichlorobenzene	ND		ug/l	5.0	--
1,3-Dichlorobenzene	ND		ug/l	5.0	--

Project Name: NBHS IRA 24HR POTW **Lab Number:** L1216803

Project Number: 115058 **Report Date:** 09/27/12

Method Blank Analysis
Batch Quality Control

Analytical Method: 5,624
Analytical Date: 09/27/12 11:05
Analyst: KL

Parameter	Result	Qualifier	Units	RL	MDL
Volatile Organics by GC/MS - Westborough Lab for sample(s): 01,03 Batch: WG563293-8					
1,4-Dichlorobenzene	ND		ug/l	5.0	--
p/m-Xylene[1]	ND		ug/l	2.0	--
o-xylene[1]	ND		ug/l	1.0	--
Xylene (Total)[1]	ND		ug/l	2.0	--
Styrene[1]	ND		ug/l	1.0	--
Acetone[1]	ND		ug/l	10	--
Carbon disulfide[1]	ND		ug/l	5.0	--
2-Butanone[1]	ND		ug/l	10	--
Vinyl acetate[1]	ND		ug/l	10	--
4-Methyl-2-pentanone[1]	ND		ug/l	10	--
2-Hexanone[1]	ND		ug/l	10	--
Acrolein[1]	ND		ug/l	8.0	--
Acrylonitrile[1]	ND		ug/l	10	--
Methyl tert butyl ether[1]	ND		ug/l	20	--
Dibromomethane[1]	ND		ug/l	1.0	--
1,4-Dioxane[1]	ND		ug/l	2000	--
Tert-Butyl Alcohol[1]	ND		ug/l	100	--
Tertiary-Amyl Methyl Ether[1]	ND		ug/l	20	--

Surrogate	%Recovery	Qualifier	Acceptance Criteria
Pentafluorobenzene	95		80-120
Fluorobenzene	99		80-120
4-Bromofluorobenzene	102		80-120

Lab Control Sample Analysis
Batch Quality Control

Project Name: NBHS IRA 24HR POTW
Project Number: 115058
Lab Number: L1216803
Report Date: 09/27/12

Parameter	LCS %Recovery	Qual	LCSD %Recovery	Qual	%Recovery Limits	RPD	Qual	RPD Limits
Volatile Organics by GC/MS - Westborough Lab Associated sample(s): 01,03 Batch: WG563293-7								
Methylene chloride	96		-		70-111	-		30
1,1-Dichloroethane	96		-		78-116	-		30
Chloroform	92		-		86-111	-		30
Carbon tetrachloride	**138**	Q	-		60-112	-		30
1,2-Dichloropropane	90		-		83-113	-		30
Dibromochloromethane	104		-		58-129	-		30
1,1,2-Trichloroethane	86		-		80-118	-		30
2-Chloroethylvinyl ether	95		-		69-124	-		30
Tetrachloroethene	87		-		80-126	-		30
Chlorobenzene	100		-		80-126	-		30
Trichlorofluoromethane	126		-		83-128	-		30
1,2-Dichloroethane	82		-		82-110	-		30
1,1,1-Trichloroethane	105		-		72-109	-		30
Bromodichloromethane	105		-		71-120	-		30
trans-1,3-Dichloropropene	93		-		73-106	-		30
cis-1,3-Dichloropropene	98		-		78-111	-		30
Bromoform	109		-		45-131	-		30
1,1,2,2-Tetrachloroethane	97		-		81-122	-		30
Benzene	84		-		84-116	-		30
Toluene	88		-		83-121	-		30
Ethylbenzene	98		-		84-123	-		30

Lab Control Sample Analysis
Batch Quality Control

Project Name: NBHS IRA 24HR POTW
Project Number: 115058
Lab Number: L1216803
Report Date: 09/27/12

Parameter	LCS %Recovery	Qual	LCSD %Recovery	Qual	%Recovery Limits	RPD	Qual	RPD Limits
Volatile Organics by GC/MS - Westborough Lab Associated sample(s): 01,03 Batch: WG563293-7								
Chloromethane	**162**	Q	-		70-144	-		30
Bromomethane	**170**	Q	-		63-141	-		30
Vinyl chloride	**137**	Q	-		56-118	-		30
Chloroethane	116		-		74-130	-		30
1,1-Dichloroethene	97		-		77-116	-		30
trans-1,2-Dichloroethene	91		-		81-121	-		30
cis-1,2-Dichloroethene[1]	90		-		85-110	-		30
Trichloroethene	89		-		84-118	-		30
1,2-Dichlorobenzene	97		-		78-128	-		30
1,3-Dichlorobenzene	98		-		77-125	-		30
1,4-Dichlorobenzene	98		-		77-125	-		30
p/m-Xylene[1]	98		-		81-121	-		30
o-Xylene[1]	100		-		81-124	-		30
XYLENE (TOTAL)[1]	99		-		81-122	-		30
Styrene[1]	105		-		84-133	-		30
Acetone[1]	75		-		40-160	-		30
Carbon disulfide[1]	104		-		54-134	-		30
2-Butanone[1]	75		-		57-116	-		30
Vinyl acetate[1]	89		-		40-160	-		30
4-Methyl-2-pentanone[1]	**78**	Q	-		79-125	-		30
2-Hexanone[1]	80		-		78-120	-		30

Lab Control Sample Analysis
Batch Quality Control

Project Name: NBHS IRA 24HR POTW
Project Number: 115058
Lab Number: L1216803
Report Date: 09/27/12

Parameter	LCS %Recovery	Qual	LCSD %Recovery	Qual	%Recovery Limits	RPD	Qual	RPD Limits
Volatile Organics by GC/MS - Westborough Lab Associated sample(s): 01,03 Batch: WG563293-7								
Acrolein[1]	82		-		40-160	-		30
Acrylonitrile[1]	78		-		66-123	-		30
Methyl tert butyl ether[1]	94		-		57-126	-		30
Dibromomethane[1]	86		-		65-126	-		30
1,4-Dioxane[1]	82		-		74-121	-		30
tert-Butyl Alcohol[1]	79		-		52-114	-		30
Tertiary-Amyl Methyl Ether[1]	83		-		66-111	-		30

Surrogate	LCS %Recovery	Qual	LCSD %Recovery	Qual	Acceptance Criteria
Pentafluorobenzene	96				80-120
Fluorobenzene	94				80-120
4-Bromofluorobenzene	101				80-120

Matrix Spike Analysis
Batch Quality Control

Project Name: NBHS IRA 24HR POTW
Project Number: 115058
Lab Number: L1216803
Report Date: 09/27/12

Parameter	Native Sample	MS Added	MS Found	MS %Recovery	Qual	MSD Found	MSD %Recovery	Qual	Recovery Limits	RPD	Qual	RPD Limits
Volatile Organics by GC/MS - Westborough Lab Associated sample(s): 01,03 QC Batch ID: WG563293-6 QC Sample: L1216770-01 Client ID: MS Sample												
Methylene chloride	ND	200	240	**119**	Q	-	-		70-111	-		30
1,1-Dichloroethane	ND	200	250	**124**	Q	-	-		78-116	-		30
Chloroform	ND	200	240	**121**	Q	-	-		86-111	-		30
Carbon tetrachloride	ND	200	330	**165**	Q	-	-		60-112	-		30
1,2-Dichloropropane	ND	200	240	**119**	Q	-	-		83-113	-		30
Dibromochloromethane	ND	200	220	111		-	-		58-129	-		30
1,1,2-Trichloroethane	ND	200	210	105		-	-		80-118	-		30
2-Chloroethylvinyl ether	ND	200	ND	**0**	Q	-	-		69-124	-		30
Tetrachloroethene	ND	200	200	102		-	-		80-126	-		30
Chlorobenzene	ND	200	220	110		-	-		80-126	-		30
Trichlorofluoromethane	ND	200	330	**167**	Q	-	-		83-128	-		30
1,2-Dichloroethane	ND	200	220	109		-	-		82-110	-		30
1,1,1-Trichloroethane	ND	200	260	**132**	Q	-	-		72-109	-		30
Bromodichloromethane	ND	200	240	119		-	-		71-120	-		30
trans-1,3-Dichloropropene	ND	200	200	101		-	-		73-106	-		30
cis-1,3-Dichloropropene	ND	200	210	107		-	-		78-111	-		30
Bromoform	ND	200	200	99		-	-		45-131	-		30
1,1,2,2-Tetrachloroethane	ND	200	220	111		-	-		81-122	-		30
Benzene	ND	200	220	109		-	-		84-116	-		30
Toluene	ND	200	210	104		-	-		83-121	-		30
Ethylbenzene	ND	200	220	108		-	-		84-123	-		30

Matrix Spike Analysis
Batch Quality Control

Project Name: NBHS IRA 24HR POTW
Project Number: 115058
Lab Number: L1216803
Report Date: 09/27/12

Parameter	Native Sample	MS Added	MS Found	MS %Recovery	Qual	MSD Found	MSD %Recovery	Qual	Recovery Limits	RPD	Qual	RPD Limits
Volatile Organics by GC/MS - Westborough Lab Associated sample(s): 01,03 QC Batch ID: WG563293-6 QC Sample: L1216770-01 Client ID: MS Sample												
Chloromethane	ND	200	380	**192**	Q	-	-		70-144	-		30
Bromomethane	ND	200	170	85		-	-		63-141	-		30
Vinyl chloride	ND	200	350	**175**	Q	-	-		56-118	-		30
Chloroethane	ND	200	300	**152**	Q	-	-		74-130	-		30
1,1-Dichloroethene	ND	200	250	**123**	Q	-	-		77-116	-		30
trans-1,2-Dichloroethene	ND	200	230	113		-	-		81-121	-		30
cis-1,2-Dichloroethene[1]	ND	200	220	**112**	Q	-	-		85-110	-		30
Trichloroethene	ND	200	230	113		-	-		84-118	-		30
1,2-Dichlorobenzene	ND	200	210	106		-	-		78-128	-		30
1,3-Dichlorobenzene	ND	200	210	106		-	-		77-125	-		30
1,4-Dichlorobenzene	ND	200	210	106		-	-		77-125	-		30
p/m-Xylene[1]	ND	400	430	109		-	-		81-121	-		30
o-Xylene[1]	ND	200	220	110		-	-		81-124	-		30
XYLENE (TOTAL)[1]	ND	600	650	109		-	-		81-122	-		30
Styrene[1]	ND	200	230	115		-	-		84-133	-		30
Acetone[1]	260	500	750	98		-	-		40-160	-		30
Carbon disulfide[1]	ND	200	260	130		-	-		54-134	-		30
2-Butanone[1]	ND	500	520	105		-	-		57-116	-		30
Vinyl acetate[1]	ND	400	510	127		-	-		40-160	-		30
4-Methyl-2-pentanone[1]	ND	500	500	101		-	-		79-125	-		30
2-Hexanone[1]	ND	500	500	100		-	-		78-120	-		30

Matrix Spike Analysis
Batch Quality Control

Project Name: NBHS IRA 24HR POTW
Project Number: 115058

Lab Number: L1216803
Report Date: 09/27/12

Parameter	Native Sample	MS Added	MS Found	MS %Recovery	Qual	MSD Found	MSD %Recovery	Qual	Recovery Limits	RPD	Qual	RPD Limits
Volatile Organics by GC/MS - Westborough Lab Associated sample(s): 01,03 QC Batch ID: WG563293-6 QC Sample: L1216770-01 Client ID: MS Sample												
Acrolein[1]	ND	400	300	75		-	-		40-160	-		30
Acrylonitrile[1]	ND	400	390	98		-	-		66-123	-		30
Dibromomethane[1]	ND	200	240	120		-	-		65-126	-		30

Surrogate	MS % Recovery	MS Qualifier	MSD % Recovery	MSD Qualifier	Acceptance Criteria
4-Bromofluorobenzene	98				80-120
Fluorobenzene	100				80-120
Pentafluorobenzene	98				80-120

Lab Duplicate Analysis
Batch Quality Control

Project Name: NBHS IRA 24HR POTW
Project Number: 115058

Lab Number: L1216803
Report Date: 09/27/12

Parameter	Native Sample	Duplicate Sample	Units	RPD	Qual	RPD Limits
Volatile Organics by GC/MS - Westborough Lab Associated sample(s): 01,03 QC Batch ID: WG563293-5 QC Sample: L1216770-01 Client ID: DUP Sample						
Methylene chloride	ND	ND	ug/l	NC		30
1,1-Dichloroethane	ND	ND	ug/l	NC		30
Chloroform	ND	ND	ug/l	NC		30
Carbon tetrachloride	ND	ND	ug/l	NC		30
1,2-Dichloropropane	ND	ND	ug/l	NC		30
Dibromochloromethane	ND	ND	ug/l	NC		30
1,1,2-Trichloroethane	ND	ND	ug/l	NC		30
2-Chloroethylvinyl ether	ND	ND	ug/l	NC		30
Tetrachloroethene	ND	ND	ug/l	NC		30
Chlorobenzene	ND	ND	ug/l	NC		30
Trichlorofluoromethane	ND	ND	ug/l	NC		30
1,2-Dichloroethane	ND	ND	ug/l	NC		30
1,1,1-Trichloroethane	ND	ND	ug/l	NC		30
Bromodichloromethane	ND	ND	ug/l	NC		30
trans-1,3-Dichloropropene	ND	ND	ug/l	NC		30
cis-1,3-Dichloropropene	ND	ND	ug/l	NC		30
Bromoform	ND	ND	ug/l	NC		30
1,1,2,2-Tetrachloroethane	ND	ND	ug/l	NC		30
Benzene	ND	ND	ug/l	NC		30

Lab Duplicate Analysis
Batch Quality Control

Project Name: NBHS IRA 24HR POTW
Project Number: 115058

Lab Number: L1216803
Report Date: 09/27/12

Parameter	Native Sample	Duplicate Sample	Units	RPD	RPD Limits
Volatile Organics by GC/MS - Westborough Lab Associated sample(s): 01,03 QC Batch ID: WG563293-5 QC Sample: L1216770-01 Client ID: DUP Sample					
Toluene	ND	ND	ug/l	NC	30
Ethylbenzene	ND	ND	ug/l	NC	30
Chloromethane	ND	ND	ug/l	NC	30
Bromomethane	ND	ND	ug/l	NC	30
Vinyl chloride	ND	ND	ug/l	NC	30
Chloroethane	ND	ND	ug/l	NC	30
1,1-Dichloroethene	ND	ND	ug/l	NC	30
trans-1,2-Dichloroethene	ND	ND	ug/l	NC	30
cis-1,2-Dichloroethene[1]	ND	ND	ug/l	NC	30
Trichloroethene	ND	ND	ug/l	NC	30
1,2-Dichlorobenzene	ND	ND	ug/l	NC	30
1,3-Dichlorobenzene	ND	ND	ug/l	NC	30
1,4-Dichlorobenzene	ND	ND	ug/l	NC	30
p/m-Xylene[1]	ND	ND	ug/l	NC	30
o-Xylene[1]	ND	ND	ug/l	NC	30
XYLENE (TOTAL)[1]	ND	ND	ug/l	NC	30
Styrene[1]	ND	ND	ug/l	NC	30
Acetone[1]	260	250	ug/l	4	30
Carbon disulfide[1]	ND	ND	ug/l	NC	30

Lab Duplicate Analysis
Batch Quality Control

Project Name: NBHS IRA 24HR POTW
Project Number: 115058

Lab Number: L1216803
Report Date: 09/27/12

Parameter	Native Sample	Duplicate Sample	Units	RPD	RPD Limits
Volatile Organics by GC/MS - Westborough Lab Associated sample(s): 01,03 QC Batch ID: WG563293-5 QC Sample: L1216770-01 Client ID: DUP Sample					
2-Butanone[1]	ND	ND	ug/l	NC	30
Vinyl acetate[1]	ND	ND	ug/l	NC	30
4-Methyl-2-pentanone[1]	ND	ND	ug/l	NC	30
2-Hexanone[1]	ND	ND	ug/l	NC	30
Acrolein[1]	ND	ND	ug/l	NC	30
Acrylonitrile[1]	ND	ND	ug/l	NC	30
Dibromomethane[1]	ND	ND	ug/l	NC	30

Surrogate	%Recovery	Qualifier	%Recovery	Qualifier	Acceptance Criteria
Pentafluorobenzene	102		104		80-120
Fluorobenzene	102		102		80-120
4-Bromofluorobenzene	101		101		80-120

PCBS

Project Name: NBHS IRA 24HR POTW **Lab Number:** L1216803

Project Number: 115058 **Report Date:** 09/27/12

SAMPLE RESULTS

Lab ID:	L1216803-02	Date Collected:	09/20/12 06:00
Client ID:	EFFLUENT (COMP)	Date Received:	09/20/12
Sample Location:	NEW BEDFORD, MA	Field Prep:	Not Specified
Matrix:	Water	Extraction Method:	EPA 608
Analytical Method:	5,608	Extraction Date:	09/21/12 22:54
Analytical Date:	09/24/12 17:06	Cleanup Method1:	EPA 3665A
Analyst:	BL	Cleanup Date1:	09/22/12
		Cleanup Method2:	EPA 3660B
		Cleanup Date2:	09/22/12

Parameter	Result	Qualifier	Units	RL	MDL	Dilution Factor
Polychlorinated Biphenyls by GC - Westborough Lab						
Aroclor 1016	ND		ug/l	0.250	--	1
Aroclor 1221	ND		ug/l	0.250	--	1
Aroclor 1232	ND		ug/l	0.250	--	1
Aroclor 1242	ND		ug/l	0.250	--	1
Aroclor 1248	ND		ug/l	0.250	--	1
Aroclor 1254	ND		ug/l	0.250	--	1
Aroclor 1260	ND		ug/l	0.250	--	1

Surrogate	% Recovery	Qualifier	Acceptance Criteria
2,4,5,6-Tetrachloro-m-xylene	68		30-150
Decachlorobiphenyl	102		30-150

Project Name: NBHS IRA 24HR POTW

Project Number: 115058

Lab Number: L1216803

Report Date: 09/27/12

Method Blank Analysis
Batch Quality Control

Analytical Method: 5,608
Analytical Date: 09/24/12 17:45
Analyst: BL

Extraction Method: EPA 608
Extraction Date: 09/21/12 22:54
Cleanup Method1: EPA 3665A
Cleanup Date1: 09/22/12
Cleanup Method2: EPA 3660B
Cleanup Date2: 09/22/12

Parameter	Result	Qualifier	Units	RL	MDL
Polychlorinated Biphenyls by GC - Westborough Lab for sample(s): 02 Batch: WG562459-1					
Aroclor 1016	ND		ug/l	0.250	--
Aroclor 1221	ND		ug/l	0.250	--
Aroclor 1232	ND		ug/l	0.250	--
Aroclor 1242	ND		ug/l	0.250	--
Aroclor 1248	ND		ug/l	0.250	--
Aroclor 1254	ND		ug/l	0.250	--
Aroclor 1260	ND		ug/l	0.250	--

Surrogate	%Recovery	Qualifier	Acceptance Criteria
2,4,5,6-Tetrachloro-m-xylene	63		30-150
Decachlorobiphenyl	99		30-150

Matrix Spike Analysis
Batch Quality Control

Project Name: NBHS IRA 24HR POTW
Project Number: 115058
Lab Number: L1216803
Report Date: 09/27/12

Parameter	Native Sample	MS Added	MS Found	MS %Recovery	Qual	MSD Found	MSD %Recovery	Qual	Recovery Limits	RPD	Qual	RPD Limits
Polychlorinated Biphenyls by GC - Westborough Lab Associated sample(s): 02 QC Batch ID: WG562459-3 QC Sample: L1216738-01 Client ID: MS Sample												
Aroclor 1016	ND	1.18	0.965	82		-	-		40-140	-		50
Aroclor 1260	ND	1.18	0.820	70		-	-		40-140	-		50

Surrogate	MS % Recovery	MS Qualifier	MSD % Recovery	MSD Qualifier	Acceptance Criteria
2,4,5,6-Tetrachloro-m-xylene	78				30-150
Decachlorobiphenyl	57				30-150

Lab Control Sample Analysis

Batch Quality Control

Project Name: NBHS IRA 24HR POTW

Project Number: 115058

Lab Number: L1216803

Report Date: 09/27/12

Parameter	LCS %Recovery	Qual	LCSD %Recovery	Qual	%Recovery Limits	RPD	Qual	RPD Limits
Polychlorinated Biphenyls by GC - Westborough Lab Associated sample(s): 02 Batch: WG562459-2								
Aroclor 1016	67		-		40-140	-		50
Aroclor 1260	83		-		40-140	-		50

Surrogate	LCS %Recovery	Qual	LCSD %Recovery	Qual	Acceptance Criteria
2,4,5,6-Tetrachloro-m-xylene	48				30-150
Decachlorobiphenyl	115				30-150

Lab Duplicate Analysis
Batch Quality Control

Project Name: NBHS IRA 24HR POTW
Project Number: 115058

Lab Number: L1216803
Report Date: 09/27/12

Parameter	Native Sample	Duplicate Sample	Units	RPD	Qual	RPD Limits
Polychlorinated Biphenyls by GC - Westborough Lab Associated sample(s): 02 QC Batch ID: WG562459-4 QC Sample: L1216803-02 Client ID: EFFLUENT (COMP)						
Aroclor 1016	ND	ND	ug/l	NC		50
Aroclor 1221	ND	ND	ug/l	NC		50
Aroclor 1232	ND	ND	ug/l	NC		50
Aroclor 1242	ND	ND	ug/l	NC		50
Aroclor 1248	ND	ND	ug/l	NC		50
Aroclor 1254	ND	ND	ug/l	NC		50
Aroclor 1260	ND	ND	ug/l	NC		50

Surrogate	%Recovery	Qualifier	%Recovery	Qualifier	Acceptance Criteria
2,4,5,6-Tetrachloro-m-xylene	68		78		30-150
Decachlorobiphenyl	102		116		30-150

INORGANICS
&
MISCELLANEOUS

Project Name: NBHS IRA 24HR POTW
Project Number: 115058

Lab Number: L1216803
Report Date: 09/27/12

SAMPLE RESULTS

Lab ID: L1216803-01
Client ID: EFFLUENT (GRAB)
Sample Location: NEW BEDFORD, MA
Matrix: Water

Date Collected: 09/19/12 11:00
Date Received: 09/20/12
Field Prep: Not Specified

Parameter	Result	Qualifier	Units	RL	MDL	Dilution Factor	Date Prepared	Date Analyzed	Analytical Method	Analyst
General Chemistry - Westborough Lab										
pH (H)	6.1		SU	-	NA	1	-	09/20/12 18:15	4,150.1	DC
BOD, 5 day	ND		mg/l	2.0	NA	1	09/21/12 00:15	09/25/12 16:20	30,5210B	SL
Oil & Grease, Hem-Grav	ND		mg/l	4.0	--	1	09/24/12 10:00	09/24/12 12:30	74,1664A	JO

Project Name: NBHS IRA 24HR POTW
Project Number: 115058

Lab Number: L1216803
Report Date: 09/27/12

SAMPLE RESULTS

Lab ID: L1216803-02
Client ID: EFFLUENT (COMP)
Sample Location: NEW BEDFORD, MA
Matrix: Water

Date Collected: 09/20/12 06:00
Date Received: 09/20/12
Field Prep: Not Specified

Parameter	Result	Qualifier	Units	RL	MDL	Dilution Factor	Date Prepared	Date Analyzed	Analytical Method	Analyst
General Chemistry - Westborough Lab										
Solids, Total Suspended	6.5		mg/l	5.0	NA	1	-	09/24/12 15:15	30,2540D	DW
BOD, 5 day	ND		mg/l	2.0	NA	1	09/21/12 00:15	09/25/12 16:20	30,5210B	SL

Project Name: NBHS IRA 24HR POTW **Lab Number:** L1216803

Project Number: 115058 **Report Date:** 09/27/12

Method Blank Analysis
Batch Quality Control

Parameter	Result	Qualifier	Units	RL	MDL	Dilution Factor	Date Prepared	Date Analyzed	Analytical Method	Analyst
General Chemistry - Westborough Lab for sample(s): 01-02 Batch: WG562144-1										
BOD, 5 day	ND		mg/l	2.0	NA	1	09/21/12 00:15	09/25/12 16:20	30,5210B	SL
General Chemistry - Westborough Lab for sample(s): 02 Batch: WG562625-1										
Solids, Total Suspended	ND		mg/l	5.0	NA	1	-	09/24/12 15:15	30,2540D	DW
General Chemistry - Westborough Lab for sample(s): 01 Batch: WG562651-2										
Oil & Grease, Hem-Grav	ND		mg/l	4.0	--	1	09/24/12 10:00	09/24/12 12:30	74,1664A	JO

Lab Control Sample Analysis
Batch Quality Control

Project Name: NBHS IRA 24HR POTW
Project Number: 115058

Lab Number: L1216803
Report Date: 09/27/12

Parameter	LCS %Recovery	Qual	LCSD %Recovery	Qual	%Recovery Limits	RPD	Qual	RPD Limits
General Chemistry - Westborough Lab Associated sample(s): 01 Batch: WG562140-1								
pH	100		-		99-101	-		5
General Chemistry - Westborough Lab Associated sample(s): 01-02 Batch: WG562144-2								
BOD, 5 day	87		-		85-115	-		20
General Chemistry - Westborough Lab Associated sample(s): 01 Batch: WG562651-1								
Oil & Grease, Hem-Grav	92		-		78-114	-		18

Matrix Spike Analysis
Batch Quality Control

Project Name: NBHS IRA 24HR POTW
Project Number: 115058
Lab Number: L1216803
Report Date: 09/27/12

Parameter	Native Sample	MS Added	MS Found	MS %Recovery	Qual	MSD Found	MSD %Recovery	Qual	Recovery Limits	RPD	Qual	RPD Limits
General Chemistry - Westborough Lab Associated sample(s): 01-02 QC Batch ID: WG562144-3 QC Sample: L1216780-06 Client ID: MS Sample												
BOD, 5 day	ND	100	100	103		-	-		50-145	-		35
General Chemistry - Westborough Lab Associated sample(s): 01 QC Batch ID: WG562651-3 QC Sample: L1216742-02 Client ID: MS Sample												
Oil & Grease, Hem-Grav	ND	43.5	37	84		-	-		78-114	-		18

Lab Duplicate Analysis
Batch Quality Control

Project Name: NBHS IRA 24HR POTW
Project Number: 115058

Lab Number: L1216803
Report Date: 09/27/12

Parameter	Native Sample	Duplicate Sample	Units	RPD	Qual	RPD Limits
General Chemistry - Westborough Lab Associated sample(s): 01 QC Batch ID: WG562140-2 QC Sample: L1216803-01 Client ID: EFFLUENT (GRAB)						
pH (H)	6.1	6.2	SU	2		5
General Chemistry - Westborough Lab Associated sample(s): 01-02 QC Batch ID: WG562144-4 QC Sample: L1216780-06 Client ID: DUP Sample						
BOD, 5 day	ND	ND	mg/l	NC		35
General Chemistry - Westborough Lab Associated sample(s): 02 QC Batch ID: WG562625-2 QC Sample: L1216764-01 Client ID: DUP Sample						
Solids, Total Suspended	160	140	mg/l	13		20
General Chemistry - Westborough Lab Associated sample(s): 01 QC Batch ID: WG562651-4 QC Sample: L1216742-01 Client ID: DUP Sample						
Oil & Grease, Hem-Grav	ND	ND	mg/l	NC		18

Project Name: NBHS IRA 24HR POTW
Project Number: 115058

Lab Number: L1216803
Report Date: 09/27/12

Sample Receipt and Container Information

Were project specific reporting limits specified? YES

Reagent H2O Preserved Vials Frozen on: NA

Cooler Information Custody Seal

Cooler	
A	Absent

Container Information

Container ID	Container Type	Cooler	pH	Temp deg C	Pres	Seal	Analysis(*)
L1216803-01A	Vial HCl preserved	A	N/A	2.1	Y	Absent	624(14)
L1216803-01B	Vial HCl preserved	A	N/A	2.1	Y	Absent	624(14)
L1216803-01C	Plastic 250ml unpreserved	A	7	2.1	Y	Absent	PH-150(.01),BOD-5210(2)
L1216803-01D	Amber 1000ml HCl preserved	A	N/A	2.1	Y	Absent	OG-1664(28)
L1216803-01E	Amber 1000ml HCl preserved	A	N/A	2.1	Y	Absent	OG-1664(28)
L1216803-02A	Plastic 500ml unpreserved	A	7	2.1	Y	Absent	BOD-5210(2)
L1216803-02B	Plastic 1000ml unpreserved	A	7	2.1	Y	Absent	TSS-2540(7)
L1216803-02C	Amber 1000ml unpreserved	A	7	2.1	Y	Absent	PCB-608(7)
L1216803-02D	Amber 1000ml unpreserved	A	7	2.1	Y	Absent	PCB-608(7)
L1216803-03A	Vial HCl preserved	A	N/A	2.1	Y	Absent	COMP-VOA(0)
L1216803-03B	Vial HCl preserved	A	N/A	2.1	Y	Absent	COMP-VOA(0)
L1216803-03C	Vial HCl preserved	A	N/A	2.1	Y	Absent	COMP-VOA(0)
L1216803-03D	Vial HCl preserved	A	N/A	2.1	Y	Absent	COMP-VOA(0)
L1216803-03E	Vial HCl preserved	A	N/A	2.1	Y	Absent	COMP-VOA(0)
L1216803-03F	Vial HCl preserved	A	N/A	2.1	Y	Absent	COMP-VOA(0)
L1216803-03G	Vial HCl preserved	A	N/A	2.1	Y	Absent	COMP-VOA(0)
L1216803-03H	Vial HCl preserved	A	N/A	2.1	Y	Absent	COMP-VOA(0)
L1216803-03X	Vial HCl preserved split	A	N/A	2.1	Y	Absent	624(14)
L1216803-03Y	Vial HCl preserved split	A	N/A	2.1	Y	Absent	624(14)

Container Comments

L1216803-03X

*Values in parentheses indicate holding time in days

Project Name:	NBHS IRA 24HR POTW	**Lab Number:**	L1216803
Project Number:	115058	**Report Date:**	09/27/12

GLOSSARY

Acronyms

EPA	- Environmental Protection Agency.
LCS	- Laboratory Control Sample: A sample matrix, free from the analytes of interest, spiked with verified known amounts of analytes or a material containing known and verified amounts of analytes.
LCSD	- Laboratory Control Sample Duplicate: Refer to LCS.
LFB	- Laboratory Fortified Blank: A sample matrix, free from the analytes of interest, spiked with verified known amounts of analytes or a material containing known and verified amounts of analytes.
MDL	- Method Detection Limit: This value represents the level to which target analyte concentrations are reported as estimated values, when those target analyte concentrations are quantified below the reporting limit (RL). The MDL includes any adjustments from dilutions, concentrations or moisture content, where applicable.
MS	- Matrix Spike Sample: A sample prepared by adding a known mass of target analyte to a specified amount of matrix sample for which an independent estimate of target analyte concentration is available.
MSD	- Matrix Spike Sample Duplicate: Refer to MS.
NA	- Not Applicable.
NC	- Not Calculated: Term is utilized when one or more of the results utilized in the calculation are non-detect at the parameter's reporting unit.
NI	- Not Ignitable.
RL	- Reporting Limit: The value at which an instrument can accurately measure an analyte at a specific concentration. The RL includes any adjustments from dilutions, concentrations or moisture content, where applicable.
RPD	- Relative Percent Difference: The results from matrix and/or matrix spike duplicates are primarily designed to assess the precision of analytical results in a given matrix and are expressed as relative percent difference (RPD). Values which are less than five times the reporting limit for any individual parameter are evaluated by utilizing the absolute difference between the values; although the RPD value will be provided in the report.
SRM	- Standard Reference Material: A reference sample of a known or certified value that is of the same or similar matrix as the associated field samples.

Footnotes

1	- The reference for this analyte should be considered modified since this analyte is absent from the target analyte list of the original method.

Terms

Analytical Method: Both the document from which the method originates and the analytical reference method. (Example: EPA 8260B is shown as 1,8260B.) The codes for the reference method documents are provided in the References section of the Addendum.

Data Qualifiers

A	- Spectra identified as "Aldol Condensation Product".
B	- The analyte was detected above the reporting limit in the associated method blank. Flag only applies to associated field samples that have detectable concentrations of the analyte at less than five times (5x) the concentration found in the blank. For MCP-related projects, flag only applies to associated field samples that have detectable concentrations of the analyte at less than ten times (10x) the concentration found in the blank. For DOD-related projects, flag only applies to associated field samples that have detectable concentrations of the analyte at less than ten times (10x) the concentration found in the blank AND the analyte was detected above one-half the reporting limit (or above the reporting limit for common lab contaminants) in the associated method blank. For NJ-Air-related projects, flag only applies to associated field samples that have detectable concentrations of the analyte above the reporting limit.
C	- Co-elution: The target analyte co-elutes with a known lab standard (i.e. surrogate, internal standards, etc.) for co-extracted analyses.
D	- Concentration of analyte was quantified from diluted analysis. Flag only applies to field samples that have detectable concentrations of the analyte.
E	- Concentration of analyte exceeds the range of the calibration curve and/or linear range of the instrument.
G	- The concentration may be biased high due to matrix interferences (i.e, co-elution) with non-target compound(s). The result should be considered estimated.
H	- The analysis of pH was performed beyond the regulatory-required holding time of 15 minutes from the time of sample collection.
I	- The RPD between the results for the two columns exceeds the method-specified criteria; however, the lower value has been reported due to obvious interference.
M	- Reporting Limit (RL) exceeds the MCP CAM Reporting Limit for this analyte.
NJ	- Presumptive evidence of compound. This represents an estimated concentration for Tentatively Identified Compounds (TICs), where the identification is based on a mass spectral library search.

Report Format: Data Usability Report

Project Name:	NBHS IRA 24HR POTW	**Lab Number:**	L1216803
Project Number:	115058	**Report Date:**	09/27/12

Data Qualifiers

P - The RPD between the results for the two columns exceeds the method-specified criteria.

Q - The quality control sample exceeds the associated acceptance criteria. For DOD-related projects, LCS and/or Continuing Calibration Standard exceedences are also qualified on all associated sample results. Note: This flag is not applicable for matrix spike recoveries when the sample concentration is greater than 4x the spike added or for batch duplicate RPD when the sample concentrations are less than 5x the RL. (Metals only.)

R - Analytical results are from sample re-analysis.

RE - Analytical results are from sample re-extraction.

J - Estimated value. This represents an estimated concentration for Tentatively Identified Compounds (TICs).

ND - Not detected at the reporting limit (RL) for the sample.

Report Format: Data Usability Report

Project Name: NBHS IRA 24HR POTW **Lab Number:** L1216803
Project Number: 115058 **Report Date:** 09/27/12

REFERENCES

4 Methods for Chemical Analysis of Water and Wastes. EPA 600/4-79-020. Revised March 1983.

5 Methods for the Organic Chemical Analysis of Municipal and Industrial Wastewater. Appendix A, Part 136, 40 CFR (Code of Federal Regulations).

30 Standard Methods for the Examination of Water and Wastewater. APHA-AWWA-WPCF. 18th Edition. 1992.

74 Method 1664,Revision A: N-Hexane Extractable Material (HEM; Oil & Grease) and Silica Gel Treated N-Hexane Extractable Material (SGT-HEM; Non-polar Material) by Extraction and Gravimetry, EPA-821-R-98-002, February 1999.

LIMITATION OF LIABILITIES

Alpha Analytical performs services with reasonable care and diligence normal to the analytical testing laboratory industry. In the event of an error, the sole and exclusive responsibility of Alpha Analytical shall be to re-perform the work at it's own expense. In no event shall Alpha Analytical be held liable for any incidental, consequential or special damages, including but not limited to, damages in any way connected with the use of, interpretation of, information or analysis provided by Alpha Analytical.

We strongly urge our clients to comply with EPA protocol regarding sample volume, preservation, cooling, containers, sampling procedures, holding time and splitting of samples in the field.

Certificate/Approval Program Summary

Last revised August 16, 2012 - Westboro Facility

The following list includes only those analytes/methods for which certification/approval is currently held.
For a complete listing of analytes for the referenced methods, please contact your Alpha Customer Service Representative.

Connecticut Department of Public Health Certificate/Lab ID: PH-0574. ***NELAP Accredited Solid Waste/Soil.***

Drinking Water (Inorganic Parameters: Color, pH, Turbidity, Conductivity, Alkalinity, Chloride, Free Residual Chlorine, Fluoride, Calcium Hardness, Sulfate, Nitrate, Nitrite, Aluminum, Antimony, Arsenic, Barium, Beryllium, Cadmium, Calcium, Chromium, Copper, Iron, Lead, Magnesium, Manganese, Mercury, Nickel, Selenium, Silver, Sodium, Thallium, Zinc, Total Dissolved Solids, Total Organic Carbon, Total Cyanide, Perchlorate. Organic Parameters: Volatile Organics 524.2, Total Trihalomethanes 524.2, 1,2-Dibromo-3-chloropropane (DBCP) 504.1, Ethylene Dibromide (EDB) 504.1, 1,4-Dioxane (Mod 8270). Microbiology Parameters: Total Coliform-MF mEndo (SM9222B), Total Coliform – Colilert (SM9223, Enumeration and P/A), E. Coli. – Colilert (SM9223, Enumeration and P/A), HPC – Pour Plate (SM9215B), Fecal Coliform – MF m-FC (SM9222D), Fecal Coliform-EC Medium (SM 9221E).

Wastewater/Non-Potable Water (Inorganic Parameters: Color, pH, Conductivity, Acidity, Alkalinity, Chloride, Total Residual Chlorine, Fluoride, Total Hardness, Silica, Sulfate, Sulfide, Ammonia, Kjeldahl Nitrogen, Nitrate, Nitrite, O-Phosphate, Total Phosphorus, Aluminum, Antimony, Arsenic, Barium, Beryllium, Boron, Cadmium, Calcium, Chromium, Hexavalent Chromium, Cobalt, Copper, Iron, Lead, Magnesium, Manganese, Mercury, Molybdenum, Nickel, Potassium, Selenium, Silver, Sodium, Strontium, Thallium, Tin, Titanium, Vanadium, Zinc, Total Residue (Solids), Total Dissolved Solids, Total Suspended Solids (non-filterable), BOD, CBOD, COD, TOC, Total Cyanide, Phenolics, Foaming Agents (MBAS), Bromide, Oil and Grease. Organic Parameters: PCBs, Organochlorine Pesticides, Technical Chlordane, Toxaphene, Acid Extractables (Phenols), Benzidines, Phthalate Esters, Nitrosamines, Nitroaromatics & Isophorone, Polynuclear Aromatic Hydrocarbons, Haloethers, Chlorinated Hydrocarbons, Volatile Organics, TPH (HEM/SGT), CT-Extractable Petroleum Hydrocarbons (ETPH), MA-EPH, MA-VPH. Microbiology Parameters: Total Coliform – MF mEndo (SM9222B), Total Coliform – MTF (SM9221B), E. Coli – Colilert (SM9223 Enumeration), HPC – Pour Plate (SM9215B), Fecal Coliform – MF m-FC (SM9222D), Fecal Coliform – A-1 Broth (SM9221E), Enterococcus - Enterolert.

Solid Waste/Soil (Inorganic Parameters: pH, Sulfide, Aluminum, Antimony, Arsenic, Barium, Beryllium, Boron, Cadmium, Calcium, Chromium, Hexavalent Chromium, Cobalt, Copper, Iron, Lead, Magnesium, Manganese, Mercury, Molybdenum, Nickel, Potassium, Selenium, Silver, Sodium, Thallium, Tin, Vanadium, Zinc, Total Cyanide, Ignitability, Phenolics, Corrosivity, TCLP Leach (1311), SPLP Leach (1312 metals only), Reactivity. Organic Parameters: PCBs, PCBs in Oil, Organochlorine Pesticides, Technical Chlordane, Toxaphene, CT-Extractable Petroleum Hydrocarbons (ETPH), MA-EPH, MA-VPH, Dicamba, 2,4-D, 2,4,5-T, 2,4,5-TP(Silvex), Dalapon, Volatile Organics (SW 8260), Acid Extractables (Phenols) (SW 8270), Benzidines (SW 8270), Phthalates (SW 8270), Nitrosamines (SW 8270), Nitroaromatics & Cyclic Ketones (SW 8270), PAHs (SW 8270), Haloethers (SW 8270), Chlorinated Hydrocarbons (SW 8270).)

Maine Department of Human Services Certificate/Lab ID: 2009024.
Drinking Water (Inorganic Parameters: SM9215B, 9222D, 9223B, EPA 180.1, 353.2, SM2130B, 2320B, 2540C, 4500Cl-D, 4500CN-C, 4500CN-E, 4500F-C, 4500H+B, 4500NO3-F, EPA 200.7, EPA 200.8, 245.1, EPA 300.0. Organic Parameters: 504.1, 524.2.)

Wastewater/Non-Potable Water (Inorganic Parameters: EPA 120.1, 1664A, 350.1, 351.1, 353.2, 410.4, 420.1, SM2320B, 2510B, 2540C, 2540D, 426C, 4500Cl-D, 4500Cl-E, 4500CN-C, 4500CN-E, 4500F-B, 4500F-C, 4500H+B, 4500Norg-B, 4500Norg-C, 4500NH3-B, 4500NH3-G, 4500NO3-F, 4500P-B, 4500P-E, 5210B, 5220D, 5310C, 9010B, 9040B, 9030B, 7470A, 7196A, 2340B, EPA 200.7, 6010B, 200.8, 6020, 245.1, 1311, 1312, 3005A, Enterolert, 9223D, 9222D. Organic Parameters: 608, 624, 625, 8081A, 8082, 8330, 8151A, 8260B, 8270C, 3510C, 3630C, 5030B, ME-DRO, ME-GRO, MA-EPH, MA-VPH.)

Solid Waste/Soil (Inorganic Parameters: 9010B, 9012A, 9014A, 9030B, 9040B, 9045C, 6010B, 7471A, 7196A, 9050A, 1010, 1030, 9065, 1311, 1312, 3005A, 3050B. Organic Parameters: ME-DRO, ME-GRO, MA-EPH, MA-VPH, 8260B, 8270C, 8330, 8151A, 8081A, 8082, 3540C, 3546, 3580A, 3630C, 5030B, 5035.)

Massachusetts Department of Environmental Protection Certificate/Lab ID: M-MA086.
*Drinking Water (*Inorganic Parameters: (EPA 200.8 for: Sb,As,Ba,Be,Cd,Cr,Cu,Pb,Ni,Se,Tl) (EPA 200.7 for: Ba,Be,Ca,Cd,Cr,Cu,Na,Ni) 245.1, (300.0 for: Nitrate-N, Fluoride, Sulfate); (EPA 353.2 for: Nitrate-N, Nitrite-N); (SM4500NO3-F for: Nitrate-N and Nitrite-N); 4500F-C, 4500CN-CE, EPA 180.1, SM2130B, SM4500Cl-D, 2320B, SM2540C, SM4500H-B. Organic Parameters: (EPA 524.2 for: Trihalomethanes, Volatile Organics); (504.1 for: 1,2-Dibromoethane, 1,2-Dibromo-3-Chloropropane), EPA 332. Microbiology Parameters: SM9215B; ENZ. SUB. SM9223; ColilertQT SM9223B; MF-SM9222D.)

*Non-Potable Water (*Inorganic Parameters:, (EPA 200.8 for: Al,Sb,As,Be,Cd,Cr,Cu,Pb,Mn,Ni,Se,Ag,Tl,Zn); (EPA 200.7

for: Al,Sb,As,Be,Cd,Ca,Cr,Co,Cu,Fe,Pb,Mg,Mn,Mo,Ni,K,Se,Ag,Na,Sr,Ti,Tl,V,Zn); 245.1, SM4500H,B, EPA 120.1, SM2510B, 2540C, 2340B, 2320B, 4500CL-E, 4500F-BC, 426C, SM4500NH3-BH, (EPA 350.1 for: Ammonia-N), LACHAT 10-107-06-1-B for Ammonia-N, SM4500NO3-F, 353.2 for Nitrate-N, SM4500NH3-BC-NES, EPA 351.1, SM4500P-E, 4500P-B,E, 5220D, EPA 410.4, SM 5210B, 5310C, 4500CL-D, EPA 1664, SM14 510AC, EPA 420.1, SM4500-CN-CE, SM2540D.
Organic Parameters: (EPA 624 for Volatile Halocarbons, Volatile Aromatics),(608 for: Chlordane, Toxaphene, Aldrin, alpha-BHC, beta-BHC, gamma-BHC, delta-BHC, Dieldrin, DDD, DDE, DDT,Endosulfan I, Endosulfan II, Endosulfan sulfate, Endrin, Endrin Aldehyde, Heptachlor, Heptachlor Epoxide, PCBs-Water), (EPA 625 for SVOC Acid Extractables and SVOC Base/Neutral Extractables), 600/4-81-045-PCB-Oil. Microbiology Parameters: (ColilertQT SM9223B; Enterolert-QT: SM9222D-MF.)

New Hampshire Department of Environmental Services Certificate/Lab ID: 200307. ***NELAP Accredited.***
Drinking Water (Inorganic Parameters: SM 9222B, 9223B, 9215B, EPA 200.7, 200.8, 300.0, SM4500CN-E, 4500H+B, 4500NO3-F, 2320B, 2510B, 2540C, 4500F-C, 5310C, 2120B, EPA 332.0. Organic Parameters: 504.1, 524.2.)

Non-Potable Water (Inorganic Parameters: SM9222D, 9221B, 9222B, 9221E-EC, EPA 3005A, 200.7, 200.8, 245.1, SW-846 6010B, 6010C, 6020, 6020A, 7196A, 7470A, SM3500-CR-D, EPA 120.1, 300.0, 350.1, 350.2, 351.1, 353.2, 410.4, 420.1, 426C, 1664A, SW-846 9010B, 9030B, 9040B, SM2120B, 2310B, 2320B, 2540B, 2540D, 4500H+B, 4500CL-E, 4500CN-E, 4500NH3-H, 4500NO3-F, 4500NO2-B, 4500P-E, 4500-S2-D, 5210B, 5220D, 2510B, 2540C, 4500F-C, 5310C, 5540C, LACHAT 10-204-00-1-A, LACHAT 10-107-06-2-D, 3060A. Organic Parameters: SW-846 3510C, 3630C, 5030B, 8260B, 8270C, 8270D, 8330, EPA 624, 625, 608, SW-846 8082, 8082A, 8081A, 8081B, 8151A, 8330, 8270C-SIM, 8270D-SIM.)

Solid & Chemical Materials (Inorganic Parameters: SW-846 6010B, 6010C, 7196A, 7471A, 1010, 1030, 9010, 9012A, 9014, 9030B, 9040B, 9045C, 9050, 9065,1311, 1312, 3005A, 3050B, 3060A. Organic Parameters: SW-846 3540C, 3546, 3050B, 3580A, 3630C, 5030B, 5035, 8260B, 8270C, 8270D, 8270C-SIM, 8270D-SIM, 8330, 8151A, 8015B, 8015C, 8082, 8082A, 8081A, 8081B.)

New Jersey Department of Environmental Protection Certificate/Lab ID: MA935. ***NELAP Accredited.***
Drinking Water (Inorganic Parameters: SM9222B, 9221E, 9223B, 9215B, 4500CN-CE, 4500NO3-F, 4500F-C, EPA 300.0, 200.7, 200.8, 245.1, 2540C, SM2120B, 2320B, 2510B, 5310C, SM4500H-B. Organic Parameters: EPA 332, 504.1, 524.2.)

Non-Potable Water (Inorganic Parameters: SM5210B, EPA 410.4, SM5220D, 4500Cl-E, EPA 300.0, SM2120B, 2340B, SM4500F-BC, EPA 200.7, 200.8, 351.1, LACHAT 10-107-06-2-D, EPA 353.2, SM4500NO3-F, 4500NO2-B, EPA 1664A, SM5310B, C or D, 4500-PE, EPA 420.1, SM510ABC, SM4500P-B5+E, 2540B, 2540C, 2540D, 2540G, EPA 120.1, SM2510B, SM2520B, SM15 426C, 9222D, 9221B, 9221C, 9221E, 9222B, 9215B, 2310B, 2320B, 4500NH3-H, 4500-S D, EPA 350.1, 350.2, SW-846 1312, 7470A, 5540C, SM4500H-B, 4500SO3-B, SM3500Cr-D, 4500CN-CE, EPA 245.1, SW-846 9040B, 3005A, 3015, EPA 6010B, 6010C, 6020, 6020A, 7196A, 3060A, SW-846 9010B, 9030B. Organic Parameters: SW-846 8260B, 8260C, 8270C, 8270D, 8270C-SIM, 8270D-SIM, 3510C, EPA 608, 624, 625, SW-846 3630C, 5030B, 8015C, 8081A, 8081B, 8082, 8082A, 8151A, 8330, 1,4-Dioxane by NJ Modified 8270, 8015B, NJ EPH.)

Solid & Chemical Materials (Inorganic Parameters: SW-846, 6010B, 6010C, 6020, 6020A, 7196A, 3060A, 9010B, 9030B, 1010, 1030, 1311, 1312, 3005A, 3050B, 7471A, 7471B, 9014, 9012A, 9040B, 9040C, 9045C, 9045D, 9050A, 9065, 9251. Organic Parameters: SW-846 8015B, 8015C, 8081A, 8081B, 8082, 8082A, 8151A, 8330, 8260B, 8260C, 8270C, 8270D, 8270C-SIM, 8270D-SIM, 3540C, 3546, 3580A, 3630C, 5030B, 5035L, 5035H, NJ OQA-QAM-025 Rev.7, NJ EPH.)

New York Department of Health Certificate/Lab ID: 11148. ***NELAP Accredited.***
Drinking Water (Inorganic Parameters: SM9223B, 9222B, 9215B, EPA 200.8, 200.7, 245.2, SM5310C, EPA 332.0, SM2320B, EPA 300.0, SM2120B, 4500CN-E, 4500F-C, 4500NO3-F, 2540C, SM 2510B. Organic Parameters: EPA 524.2, 504.1.)

Non-Potable Water (Inorganic Parameters: SM9221E, 9222D, 9221B, 9222B, 9215B, 5210B, 5310C, EPA 410.4, SM5220D, 2310B-4a, 2320B, EPA 200.7, 300.0, SM4500CL-E, 4500F-C, SM15 426C, EPA 350.1, SM4500NH3-BH, EPA 351.1, LACHAT 10-107-06-2, EPA 353.2, SM4500-NO3-F, 4500-NO2-B, 4500P-E, 2540C, 2540B, 2540D, EPA 200.8, EPA 6010B, 6010C, 6020, 6020A, EPA 7196A, SM3500Cr-D, EPA 245.1, 245.2, 7470A, SM2120B, LACHAT 10-204-00-1-A, 4500CN-CE, EPA 1664A, EPA 420.1, SM14 510C, EPA 120.1, SM2510B, SM4500S-D, SM5540C, EPA 3005A, 3015, 9010B, 9030B. Organic Parameters: EPA 624, 8260B, 8260C, 8270C, 8270D, 8270C-SIM, 8270D-SIM, 625, 608, 8081A, 8081B, 8151A, 8330, 8082, 8082A, EPA 3510C, 5030B.)

Solid & Hazardous Waste (Inorganic Parameters: EPA 1010, 1030, EPA 6010B, 6010C, 7196A, 7471A, 7471B, 9012A, 9014, 9065, 9050A, EPA 1311, 1312, 3005A, 3050B, 9010B, 9040C, 9045D. Organic Parameters: EPA 8260B, 8260C, 8270C, 8270D, 8270C-SIM, 8270D-SIM, 8015B, 8015C, 8081A, 8081B, 8151A, 8330, 8082 8082A, 3540C, 3546, 3580, 3580A, 5030B, 5035A-H, 5035A-L.)

North Carolina Department of the Environment and Natural Resources Certificate/Lab ID : 666. (Inorganic Parameters: SM2310B, 2320B, 4500Cl-E, 4500Cn-E, 9014, Lachat 10-204-00-1-X, 1010A, 1030, 4500NO3-F, 353.2, 4500P-E, 4500SO4-E, 300.0, 4500S-D, 5310B, 5310C, 6010C, 6020A, 200.7, 200.8, 3500Cr-B, 7196A, 245.1, 7471A, 7471B, 1311,1312. Organic Parameters: 608, 8081B, 8082A, 624, 8260B, 625, 8270D, 8151A, 8015C, 504.1, MA-EPH, MA-VPH.)

Drinking Water Program Certificate/Lab ID: 25700. (Inorganic Parameters: Chloride EPA 300.0. Organic Parameters: 524.2)

Pennsylvania Department of Environmental Protection Certificate/Lab ID : 68-03671. ***NELAP Accredited.***
Drinking Water (Inorganic Parameters: 200.7, 200.8, 245.2, 300.0, 332.0, 2120B, 2320B, 2510B, 2540C, 4500-CN-CE, 4500F-C, 4500H+-B, 4500NO3-F, 5310C. Organic Parameters: EPA 524.2, 504.1)

Non-Potable Water (Inorganic Parameters: EPA 120.1, 1312, 3005A,3015, 3060A, 200.7, 200.8, 410.4, 1664A, SM2540D, 5210B, 5220D, 4500-P,BE, 245.1, 300.0, 3501., 350.2, 353.2, 420.1, 6010B, 6010C, 6020, 6020A, 7196A, 7470A, 9010B, 9030B, 9040B, Lachat 10-107-06-2-D, NJ-EPH, 2120B, 2310B, 2320B, 2340B, 2510C, 2540B, 2540C, 3500Cr-D, 436C, 4500CN-CE, 4500Cl-E, 4500F-B, 4500F-C, 4500H+-B, 4500NO2-B, 4500NO3-F, 4500S-D, 4500SO3-B, 5310BCD, 5540C. Organic Parameters: EPA 3510C, 3630C, 5030B, 625, 624, 608, 8081A, 8081B, 8082, 8082A, 8151A, 8260B, 8270C, 8270D, 8330, 8015B,)

Solid & Hazardous Waste (Inorganic Parameters: EPA 350.1, 1010, 1030, 1311, 1312, 3005A, 3050B, 3060A, 6010B, 6010C, 6020A, 7196A, 7471A, 7471B, 9010B, 9012A, 9014, 9040B, 9045C, 9050, 9065, SM 4500NH3-BH, 9030B, 9038, 9251. Organic Parameters: 3540C, 3546, 3580A, 3630C, 5035, 8015B, 8015C, 8081A, 8081B, 8082, 8082A, 8151A, 8260B, 8270C, 8270D, 8270C-SIM, 8270D-SIM, 8330, NJ-EPH.)

Rhode Island Department of Health Certificate/Lab ID: LAO00065. ***NELAP Accredited via NJ-DEP.***
Refer to MA-DEP Certificate for Potable and Non-Potable Water.
Refer to NJ-DEP Certificate for Potable and Non-Potable Water.

Texas Commisson on Environmental Quality Certificate/Lab ID: T104704476-09-1. ***NELAP Accredited.***
Non-Potable Water (Inorganic Parameters: EPA 120.1, 1664, 200.7, 200.8, 245.1, 245.2, 300.0, 350.1, 351.1, 353.2, 410.4, 420.1, 6010, 6020, 7196, 7470, 9040, SM 2120B, 2310B, 2320B, 2510B, 2540B, 2540C, 2540D, 426C, 4500CL-E, 4500CN-E, 4500F-C, 4500H+B, 4500NH3-H, 4500NO2B, 4500P-E, 4500 S2¯D, 510C, 5210B, 5220D, 5310C, 5540C. Organic Parameters: EPA 608, 624, 625, 8081, 8082, 8151, 8260, 8270, 8330.)

Solid & Hazardous Waste (Inorganic Parameters: EPA 1311, 1312, 9012, 9014, 9040, 9045, 9050, 9065.)

Virginia Division of Consolidated Laboratory Services Certificate/Lab ID: 460195. ***NELAP Accredited.***
Drinking Water (Inorganic Parameters: EPA 200.7, 200.8, 300.0, 2510B, 2120B, 2540C, 4500CN-CE, 245.2, 2320B, 4500F-C, 4500F-C, 4500NO3-F, 5310C. Organic Parameters: EPA 504.1, 524.2.)

Non-Potable Water (Inorganic Parameters: EPA 120.1, 1664A, 200.7, 2..08, 245.1, 300.0, 3005A, 3015, 1312, 6010B, 6010C, 3060A, 353.2, 420.1, 6020, 6020A, SM4500S-D, SM4500-CN-CE, Lachat 10-204-00-1-X, 7196A, 7470A, 9010B, 9040B, 2310B, 2320B, 2510B, 2540B, 2540C, 3500Cr-D, 426C, 4500Cl-E, 4500F-B, 4500F-C, 4500PE, 510AC, 5210B, 5310B 5310C, 5540C. Organic Parameters: EPA 3510C, 3630C, 5030B, 8260B, 608, 624, 625, 8081A, 8081B, 8082, 8082A, 8151A, 8270C, 8270D, 8270C-SIM, 8270D-SIM, 8330,)

Solid & Hazardous Waste (Inorganic Parameters: EPA 1010A, 1030, 3060A, 3050B, 1311, 1312, 6010B, 6010C, 6020, , 7196A, 7471A, 7471B, 6020A, 9030B, 9010B, 9012A, 9014 9040B, 9045C, 9050A, 9065. Organic Parameters: EPA 5035, 3540C, 3546, 3550, 3580, 3630C, 8260B, 8015B, 8015C, 8081A, 8081B, 8082, 8082A, 8151A, 8270C, 8270D, 8270C-SIM, 8270D-SIM, 8330.)

Department of Defense, L-A-B Certificate/Lab ID: L2217.
Drinking Water (Inorganic Parameters: SM 4500H-B. Organic Parameters: EPA 524.2, 504.1.)

Non-Potable Water (Inorganic Parameters: EPA 200.7, 200.8, 6010B, 6010C, 6020, 6020A, 245.1, 245.2, 7470A, 9040B, 9010B, 180.1. 300.0, 332.0, 6860, 353.2, 410.4, 9060, 1664A, SM 4500CN-E, 4500H-B, 4500NO3-F, 4500CL-D, 5220D, 5310C, 2130B, 2320B, 2540C, 3005A, 3015, 9010B, 9056. Organic Parameters: EPA 8260B, 8260C, 8270C, 8270D, 8270C-SIM, 8270D-SIM, 8330A, 8082, 8082A, 8081A, 8081B, 3510C, 5030B, MassDEP EPH, MassDEP VPH.)

Solid & Hazardous Waste (Inorganic Parameters: EPA 200.7, 6010B, 6010C, 7471A, 6860, 1311, 1312, 3050B, 7196A, 9010B, 9012A, 9040B, 9045C, 3500-CR-D, 4500CN-CE, 2540G, Organic Parameters: EPA 8260B, 8260C, 8270C, 8270D, 8270C-SIM, 8270D-SIM, 8330A/B-prep, 8082, 8082A, 8081A, 8081B, 3540C, 3546, 3580A, 5035A, MassDEP EPH, MassDEP VPH.)

The following analytes are not included in our current NELAP/TNI Scope of Accreditation:
EPA 8260B: Freon-113, 1,2,4,5-Tetramethylbenzene, 4-Ethyltoluene. **EPA 8330A:** PETN, Picric Acid, Nitroglycerine, 2,6-DANT, 2,4-DANT. **EPA 8270C:** Methyl naphthalene, Dimethyl naphthalene, Total Methylnapthalenes, Total Dimethylnaphthalenes, 1,4-Diphenylhydrazine (Azobenzene). **EPA 625:** 4-Chloroaniline, 4-Methylphenol. Total Phosphorus in a soil matrix, Chloride in a soil matrix, TKN in a soil matrix, NO2 in a soil matrix, NO3 in a soil matrix, SO4 in a soil matrix. **EPA 9071:** Total Petroleum Hydrocarbons, Oil & Grease.

CHAIN OF CUSTODY

PAGE 1 OF 1

ALPHA ANALYTICAL

WESTBORO, MA TEL: 508-898-9220 FAX: 508-898-9193

MANSFIELD, MA TEL: 508-822-9300 FAX: 508-822-3288

Date Rec'd in Lab: 9/20/12

ALPHA Job #: L1216803

Client Information

Client: TRC

Address: 650 SUFFOLK ST
LOWELL MA.

Phone: 978-970-5600

Fax:

Email: DSULLIVAN ALEONARD@TRCSOLUTIONS.COM

☐ These samples have been previously analyzed by Alpha

Project Information

Project Name: NBHS IRA 24 HR POTW

Project Location: NEW BEDFORD MA

Project #: 115058

Project Manager: DAVID SULLIVAN

ALPHA Quote #:

Turn-Around Time

☑ Standard 5-DAY ☐ RUSH (only confirmed if pre-approved!)

Date Due: 9/27/12 Time:

Report Information - Data Deliverables

☐ FAX ☑ EMAIL

☐ ADEx ☐ Add'l Deliverables

Billing Information

☐ Same as Client info PO #: C115058

Regulatory Requirements/Report Limits

State /Fed Program | Criteria

MA MCP PRESUMPTIVE CERTAINTY --- CT REASONABLE CONFIDENCE PROTO

☑ Yes ☐ No Are MCP Analytical Methods Required?

☐ Yes ☐ No Is Matrix Spike (MS) Required on this SDG? (If yes see note in Comments)

☐ Yes ☐ No Are CT RCP (Reasonable Confidence Protocols) Required?

Other Project Specific Requirements/Comments/Detection Limits:

If MS is required , indicate in Sample Specific Comments which samples and what tests MS to be performed.
(Note: All *CAM* methods for inorganic analyses require MS every 20 soil samples)

SAMPLE HANDLING

Filtration
☐ Done
☐ Not needed
☐ Lab to do

Preservation
☐ Lab to do
(Please specify below)

ALPHA Lab ID (Lab Use Only)	Sample ID	Collection Date	Collection Time	Sample Matrix	Sampler's Initials	OIL & GREASE MIGHA	PCBs BY M-608	BOD	TSS BY M-160.2	VOCs BY 624	PH BY M-150.1							Sample Specific Comments	TOTAL # BOTTLES
16803.1	EFFLUENT (GRAB)	9/19	11:00	E	JF	✓		✓		✓	✓								5
.2	EFFLUENT (COMP)	9/19 9/20	11:00 6:00	E	JF		✓	✓	✓										4 +
.3	EFF. C-1 THRU. C-4	"	"	E	JF				LAB COMP									PAIR OF VOAS COLLECTED EVERY 6 HOURS.	8

Container Type	A	A	P	P	V	P
Preservative	B	A	A	A	B	A

PLEASE ANSWER QUESTIONS ABOVE!

IS YOUR PROJECT MA MCP *or* CT RCP?

Relinquished By:	Date/Time	Received By:	Date/Time
Jason C Fiino	9/20 0820	[illegible]	9/20/12 0820
[illegible]	9/20/12 0820	[illegible]	9/20/12 825
[illegible]	9/20/12 1045	[illegible]	9/20/12 1045

Please print clearly, legibly and completely. Samples can not be logged in and turnaround time clock will not start until any ambiguities are resolved. All samples submitted are subject to Alpha's Terms and Conditions. See reverse side.

FORM NO: 01-01 (rev. 18-Jan-2010)

Serial_No:09271216:05