IMMEDIATE RESPONSE ACTION STATUS REPORT

New Bedford High School Substantial Release Migration / Critical Exposure Pathway
230 Hathaway Boulevard
New Bedford, Massachusetts
Release Tracking Number 4-22409

Prepared for:

City of New Bedford
133 William Street
New Bedford, Massachusetts 02740

Prepared by:

TRC Environmental Corporation
Wannalancit Mills
650 Suffolk Street
Lowell, Massachusetts 01854
(978) 970-5600

May 2010

TABLE OF CONTENTS

I BACKGROUND 1

II IMMEDIATE RESPONSE ACTION STATUS REPORT (310 CMR 40.0425) 9

III REFERENCES..... III-1

TABLES

Table 1: Summary of Analytical Results for Aqueous Seep Samples – December 2009 and January 2010
Table 2: Summary of Analytical Results for Groundwater Samples – 2010
Table 3: Summary of Analytical Results for Indoor Air Samples – 2010
Table 4: Summary of Analytical Results for Storm Sewer Samples – February 2010
Table 5: Summary of Analytical Results for Sanitary Sewer Samples – February 2010
Table 6: Summary of Analytical Results for Soil Gas Samples – 2010
Table 7: Groundwater Elevations – New Bedford High School

FIGURES

Figure 1: Site Aerial Photograph
Figure 2: Site Plan with Sampling Locations
Figure 3: Permanent Soil Gas Sampling Points Installation Details
Figure 4: Groundwater Contours – February 2010
Figure 5: Groundwater Contours – April 2010
Figure 6: Groundwater Contours – May 2010

APPENDICES

Appendix A: Laboratory Data Reports
Appendix B: Sealed Floor Drains
Appendix C: Sealed Floor Cracks
Appendix D: Mechanical Room & Auto Shop Area Product Inventory
Appendix E: Updated Imminent Hazard Screening Evaluation
Appendix F: Groundwater Monitoring Well Installation Logs – April 2010
Appendix G: Groundwater Monitoring Sampling Logs – April 2010
Appendix H: Sanitary Line Camera Investigation
Appendix I: Copy of Environmental Fact Sheet – March 2010
Appendix J: Manifests

Immediate Response Action Status Report

New Bedford High School – Substantial Release Migration / Critical Exposure Pathway

230 Hathaway Boulevard, New Bedford, Massachusetts

Release Tracking Number (RTN) 4-22409

TRC Project Number: 115058

May 24, 2010

TRC Environmental Corporation (TRC) is submitting this Immediate Response Action Status Report (IRA Status Report) to the Massachusetts Department of Environmental Protection (MassDEP) on behalf of the City of New Bedford (City) through the City's Department of Environmental Stewardship and in accordance with the Massachusetts Contingency Plan (MCP; 310 CMR 40.0000). This IRA Status Report addresses a Condition of Substantial Release Migration (SRM) at the New Bedford High School (NBHS) campus located at 230 Hathaway Boulevard in New Bedford, Massachusetts (the "Site") as defined under 310 CMR 40.0006 of the MCP. The condition was reported to the MassDEP by TRC via telephone in conjunction with the City of New Bedford on January 29, 2010 at approximately 11:05 AM. MassDEP orally approved IRA assessment and mitigation activities at the Site, and assigned Release Tracking Number (RTN) 4-22409. The NBHS campus is part of the larger Parker Street Waste Site (PSWS) that is tracked by MassDEP under RTN 4-15685. The location of the Site is shown in Figure 1.

This IRA Status Report is organized as follows: Section I (Background) briefly summarizes information on TRC's involvement with the Site, the circumstances of the release, and the response actions conducted at the Site under MassDEP oral approval. Section II (IRA Status Report) provides the contents of an IRA Status Report as set forth under the MCP, specifically 310 CMR 40.0425. Section III (References) lists information sources relied upon in the preparation of this IRA Status Report.

I BACKGROUND

The SRM condition was discovered during investigation of water pooled on the floor of the Mechanical Room (B-114) of the NBHS building. TRC collected several samples of the pooled water, including samples from locations near where groundwater appeared to be seeping through floor cracks or seams in the construction. Analytical results for these samples suggest the potential for chlorinated volatile organic compounds (VOCs) to be present in indoor air in the building, triggering the reporting condition and the initiation of IRA assessment activities.

(a) Release Discovery

On December 2, 2009, TRC collected aqueous samples from four locations (BRM-S-1 through BRM-S-3 and FIP-S-1) where water had pooled on the floor of the Mechanical Room of the NBHS building (see Figure 2). The pooled water appeared to have seeped into the Mechanical Room through cracks and seams in the concrete floor. Based on elevation data collected by TRC, the elevation of the groundwater table is generally higher than the elevation of the lower floor surfaces of the Mechanical Room, and the seepage appears to be associated with groundwater. The aqueous samples were analyzed for VOCs, extractable petroleum hydrocarbons (EPH), polyaromatic hydrocarbons (PAHs), polychlorinated biphenyls (PCBs), and total and dissolved metals. The results of the analyses indicated the presence of chlorinated VOCs in seep sample BRM-S-3 (vinyl chloride [VC], cis-1,2-dichloroethylene [cis-1,2-DCE], and trans-1,2-dichloroethylene [trans-1,2-DCE]), C19-C36 aliphatic hydrocarbons in sample BRM-S-1, and metals (arsenic, barium, lead and/or zinc) in all four of the seep samples. The concentration of VC in sample BRM-S-3 (2.1 ug/L) was greater than the MCP Method 1 GW-2 groundwater cleanup standard of 2 ug/L (see Table 1).

To verify the detection of VC, TRC re-sampled the seep water for VOCs on January 7, 2010. Chlorinated VOCs were not detected in two out of four samples. Chlorinated VOCs were detected in the two remaining sample locations: BRM-S-3 (chlorobenzene, 1,3-dichlorobenzene [1,3-DCB], 1,4-dichlorobenzene [1,4-DCB], cis-1,2-DCE, trans-1,2-DCE, trichloroethylene [TCE] and VC) and FIP-S-1(cis-1,2-DCE and trans-1,2-DCE). The concentrations detected during the January 7, 2010 sampling were higher than those detected in samples collected on December 2, 2009 (see Table 1). In sample BRM-S-3, the concentrations of cis-1,2-DCE and VC were greater than the corresponding MCP Method 1 GW-2 groundwater cleanup standards.

On January 6 and 7, 2010, TRC collected groundwater samples from monitoring wells MW-4, MW-5, MW-6, and MW-7 constructed on the NBHS campus in 2008 (see Figure 2). Monitoring wells MW-4, MW-5, and MW-6 are located inside the NBHS building in the Auto Shop (D-116), Boiler Room (C-101), and Milk Bar (B-133), respectively. MW-7 is located near the flagpole near the front entrance to the NBHS building. The samples collected from these four monitoring wells were submitted to Con-Test Analytical Laboratory (Con-Test) in East Longmeadow, Massachusetts for analysis of VOCs. Groundwater samples were collected by TRC consistent with United States Environmental Protection Agency (EPA) Region 1 low-flow sampling procedures.

Chlorinated VOCs were not detected in three out of the five aforementioned monitoring wells. Chlorinated VOCs were detected in groundwater samples from two of the monitoring wells. Cis-1,2-DCE was detected at a concentration of 3.7 ug/L (4.1 ug/L in its duplicate) in monitoring well MW-5, located inside the Boiler Room and adjacent to the Mechanical Room. Tetrachloroethylene (PCE) (63 ug/L) and VC (3.4 ug/L) were detected in sample MW-7, located in front of NBHS, near the flagpole. The concentrations of PCE and VC in the sample from MW-7 were above their respective MCP Method 1 GW-2 groundwater cleanup standards (see Table 2).

In parallel with the above investigation activities, TRC evaluated building structural features that might influence fate and transport in the groundwater beneath the NBHS building. The structural evaluation revealed an extensive underdrain system beneath the building, directing groundwater to the storm sewer during high groundwater events. A review of the NBHS engineering plans also indicated that the storm and sanitary sewers run in proximity to monitoring well MW-7 installed in the flagpole island on the west side (front) of the NBHS building.

(b) Release Reporting

On January 28, 2010 at approximately 3:30 PM, TRC advised the City's Department of Environmental Stewardship that the seep and impacted water and the underdrain system represented two potential SRM conditions as defined in 310 CMR 40.0006:

- Releases to the groundwater that have migrated or are expected to migrate more than 200 feet per year; or
- Releases to the groundwater or to the vadose zone that have resulted or are within one year likely to result in the discharge of vapors into school buildings or occupied residential dwellings.

Either of these conditions constitute a 72-hour regulatory reporting obligation to the MassDEP in accordance with 310 CMR 40.0313(5).

The SRM conditions described above were reported to the MassDEP by TRC via telephone in conjunction with the City's Department of Environmental Stewardship on January 29, 2010 at approximately 11:05 AM. MassDEP orally approved the IRAs at the Site, and assigned RTN 4-22409.

The orally-approved IRA consisted of the following:

- Monitoring of indoor air locations, including the Mechanical Room, for VOCs with expedited analysis. Recognizing that indoor air in the Mechanical Room may reflect materials stored in this area, MassDEP suggested that an inventory of chemicals stored at the NBHS building, relocation of indoor chemical sources, and ventilation of the Mechanical Room would be appropriate prior to re-sampling in this area;
- Re-sampling of seeps in the Mechanical Room; and
- Sealing of the floor seep.

(c) Analysis for a Potential Imminent Hazard

TRC evaluated whether the VOC concentrations in the seep were associated with a potential Imminent Hazard (IH) Condition based on fate and transport modeling of seep water VOC concentrations to indoor air concentrations and subsequent risk and hazard estimation. TRC modeled the potential air concentrations in the Mechanical Room where the seeps were located,

and utilized the modeled indoor air concentrations to evaluate if an IH condition was present. TRC calculated concentrations of chlorinated VOCs in the air using the equation in the EPA's *Risk Management Program Guidance for Offsite Consequence Analysis* (EPA, 2009) to calculate evaporation rates of water and VOCs as functions of air velocity over the pooled seep water to estimate the mass balance for all detected compounds. The initial risk evaluation based on the modeled indoor air concentrations concluded that an IH condition was not present (see Appendix A of the IRA Plan).

TRC also collected indoor air data in the field using a photoionization detector (PID) and TCE- and VC-specific Draeger tubes, neither of which indicated the presence of measurable VOC impacts in the breathing zone in the Mechanical Room where the seep water was present. The Draeger Tube field screening activity included TCE tubes, with a measuring range from 2 to 50 parts per million by volume (ppmv) and VC tubes, with a measuring range from 0.5 to 5 ppmv. Twenty-one locations were sampled, including one location several inches above seep BRM-S-3. The lower end of these ranges is adequate to determine that an IH condition is not present.

(d) IRA Activities Performed Prior to this Status Period

Following the reporting of the release condition to MassDEP on Friday, January 29, 2010, TRC undertook investigations of indoor air, subslab soil vapors, groundwater, aqueous seeps, storm sewer infrastructure, and sanitary sewer infrastructure to evaluate the SRM and the nature and extent of impacts at NBHS. Sample locations are shown on Figure 2.

The results of IRA investigation activities conducted prior to April, 2010 are detailed in TRC's *Immediate Response Action Plan – New Bedford High School Substantial Release Migration / Critical Exposure Pathway* submitted to MassDEP on March 22, 2010 (TRC, 2010). A summary of those findings is presented herein. For completeness, this section also includes other activities collateral to the IRA activities (e.g., Fact Sheet preparation) implemented prior to April 2010.

Indoor Air Sampling

On Saturday and Sunday, January 30 and 31, 2010, TRC collected five (5) indoor air samples for VOCs. Samples TRC-IA-1 through TRC-IA-5 were collected over a 24-hour period using evacuated stainless steel canisters. Since the sampling took place over the weekend, the NBHS Heating, Ventilating and Air Condition (HVAC) system was not in operation. The sample locations are illustrated on Figure 2.

The samples were submitted to Alpha Analytical (Alpha) of Westborough, Massachusetts for analysis by EPA Method TO-15. VOCs were detected in indoor air based on the samples collected by TRC and are summarized in Table 3. The analytical results are compared to threshold screening levels (MassDEP, 2009). Concentrations of VOCs in three of the fives samples were below the threshold screening levels. Sample TRC-IA-1 (Mechanical Room) had concentrations of benzene, TCE, and VC above the threshold screening levels. Sample TRC-IA-

5 (Classroom A-3-112) had concentrations of benzene and VC exceeding the threshold screening levels.

At the direction of MassDEP, the indoor air sample in the Mechanical Room was collected at the soonest possible time after the SRM condition was reported to MassDEP on January 29, 2010. The MassDEP was informed that immediate sampling of the Mechanical Room did not allow for relocation of products stored in the Mechanical Room that may have contributed to VOC concentrations measured in sample TRC-IA-1 prior to collecting the indoor air sample. Sampling was conducted pursuant to the MassDEP requirement despite the potential for biased analytical results to evaluate the current indoor conditions, regardless of source.

On February 3, 2010, TRC personnel conducted an initial inventory of chemical products stored at the NBHS building focused on the Mechanical Room and associated nearby locations (e.g., boiler room, engineers' offices, etc). TRC also compiled available Material Safety Data Sheet (MSDS) information. Where the chemical makeup of commercial products was not clearly marked, TRC referred to an appropriate MSDS for the product. Benzene and chlorinated solvent content was noted in a number of products.

The detection of chlorinated solvents in seep water, groundwater, and indoor air in the vicinity of the Mechanical Room defines a Critical Exposure Pathway (CEP)[1] at the NBHS building. TRC evaluated the initial indoor air results by performing site-specific risk and hazard calculations for each room where an indoor air sample had been collected assuming a chronic worker scenario (8 hours of exposure per day, 250 days per year for 27 years) (see Appendix A of the IRA Plan). The calculations indicated that risks and hazards are less than the MCP Risk Limits of an Excess Lifetime Cancer Risk (ELCR) of 1×10^{-5} and a Hazard Index (HI) of 1 for each room evaluated. The protocol is consistent with that conducted for the neighboring Keith Middle School (KMS) long-term monitoring for VOCs and PCBs. The evaluation indicates that, based on the sampling conducted in January 2010, there is no IH condition or chronic risk/hazard above MCP risk limits associated with current indoor air exposures.

Fact Sheet

TRC prepared a Fact Sheet, which the City published on February 5, 2010. The Fact Sheet served to notify the public that is was safe to occupy the high school, provided a description of the investigations completed to date, described the next steps in response actions, and identified where additional information could be obtained from the City.

[1] Section 40.0006 of the MCP defines a Critical Exposure Pathway (CEP) as a route by which subsurface contamination results in measurable concentrations of indoor air contamination in a school or residence.

Field Survey of Potential Vapor Migration Pathways

TRC identified a range of possible vapor migration pathways and potential CEP mitigation measures. The following potential pathways were identified:

- Groundwater seepage through floor cracks;
- Vapor intrusion through floor cracks;
- Vapor migration through and around drains; and
- Migration of VOCs via the HVAC system at the NBHS building.

On February 11, 2010, TRC personnel screened annular spaces in and around drains and floor cracks throughout the first floor of the NBHS building using a parts per billion (ppb) RAE low-level PID. TRC also measured floor drain dimensions and determined that all floor drain lines are 3-inches in diameter. The survey identified two floor cracks, 45 drains, two sumps (the elevator shaft and dish room hatch) and one instance of pipes emerging from the floor (Fry-o-Lator). TRC noted several instances where VOC readings at the drain or crack exceeded background concentrations.

Sampling of Storm Drains

On February 3, 2010, TRC field personnel collected aqueous samples for VOC analysis from ten storm drain manholes at the NBHS campus. The selected manholes are in-line or downstream of potential inflows from the NBHS underdrain system. Samples HS-D-1 through HS-D-9, as well as HS-ST-1, were collected from manhole locations at NBHS as illustrated on Figure 2. The sample locations were selected to evaluate whether the underdrains beneath the NBHS campus had directed impacted groundwater into the storm sewer via the footing drains.

The aqueous samples were collected using a peristaltic pump. New dedicated tubing was used for each sample to prevent cross-contamination. The samples were submitted to Con-Test Analytical Laboratory (Con-Test) of East Longmeadow, Massachusetts for analysis of VOCs.

The results of the storm drain manhole aqueous sample analysis are summarized in Table 4. VOCs were not detected in nine of the ten manholes sampled on February 3, 2010. VOCs were detected in the sample collected from the one manhole that serves both the storm sewer system and the sanitary sewer system at the NBHS campus (HS-D-5). Chloroform, cis-1,2-DCE, and 1,1,1-trichloroethane were reported for the aqueous sample collected from this manhole.

Sampling of the Sanitary Sewer

During the February school vacation on February 17, 2010, TRC collected aqueous samples from the NBHS sanitary sewer system. The five selected sanitary sewer manholes are in-line/downstream of potential inflows from the NBHS building. Samples LS-MH-1 and SS-MH-1 through SS-MH-4 were collected from the manhole locations as illustrated on Figure 2. Sample locations were selected to evaluate potential sources of the concentrations of chlorinated solvents

observed in the February 3, 2010 sample collected from the combined sanitary/storm manhole (HS-D-5).

Samples were collected using a peristaltic pump. New, dedicated tubing was used for each sample to prevent cross-contamination. The samples were submitted to Con-Test for VOC analysis. The results of the sanitary sewer manhole aqueous sample analysis, summarized in Table 5, indicate that VOCs were detected in four of the five sanitary sewer manholes. However, chlorinated solvents cis-1,2-DCE and trans-1,2-DCE were detected only in the two sanitary sewer manholes (SS-MH-3 and SS-MH-4). Sanitary sewer sample SS-MH-3 was collected immediately upstream from the combined sewer manhole (MH-4). Sanitary sewer sample SS-MH-4 was collected to verify previously obtained results from sample HS-D-5.

A comparison of groundwater elevation contours to sewer line elevation data indicates that the vitrified clay sanitary sewer line intersects the groundwater table in the vicinity of HS-MH-3. Both of the manholes where chlorinated solvent impacts have been detected are located downgradient from the point where the water table intersects the vitrified clay sewer line, and downgradient of monitoring well MW-7.

HVAC, Air Flow, and Pressure Evaluations

On February 11, 2010, a TRC Certified Industrial Hygienist (CIH) with expertise in HVAC systems and indoor air evaluations visited the NBHS building. Field data were collected with pressure differential instrumentation, a velometer for air flow measurements, and smoke testing for visual evaluation of air flow directions. Pressure differentials, in inches of water, were measured to determine the differences in pressure between the Mechanical Room and adjacent areas. Air flow measurements were also taken in open doorways, drains, and other possible pathways.

TRC noted that the Mechanical Room is under strong negative pressure relative to adjacent halls and rooms when all air handling equipment is operating. With the air handling units (AHUs) off, the pressure is less negative. The primary sources of this negative pressure are operating fans and air handling equipment in the room. A secondary source of negative pressure is the chimney effect induced by the former incinerator stack. Smoke testing of the AHUs, the condensate drains, floor drains, doorways and cracks in the seep area showed that there was a strong negative pressure and air was drawn into the intake side of the AHUs.

Well Installation & Groundwater Sampling

On February 15, 2010 (during the February school vacation), TRC installed nine additional monitoring wells (MW-11 through MW-19) around the perimeter of A- and C-Blocks at the NBHS building. The newly installed wells were surveyed by Land Planning, Incorporated (Land Planning) of Hanson, Massachusetts on February 17, 2010. TRC developed these wells and collected samples for VOC analysis in accordance with EPA Region 1 low-flow sampling techniques. Concurrently, TRC also sampled all existing TRC wells on the NBHS campus, also

by low-flow procedures. The wells were sampled from February 17 through February 19, 2010. A total of 16 wells were sampled. The well locations are illustrated on Figure 2.

The groundwater samples were submitted to Alpha for analysis of VOCs. The results of these analyses are summarized in Table 2. VOCs were not detected in 14 of the 16 wells sampled on February 15, 2010 and no VOCs were detected in any of the newly installed monitoring wells. Chlorinated compounds were detected in monitoring wells MW-5 and MW-7, at concentrations similar to the previous sample round in January 2010.

Resampling of Mechanical Room Seep Water

On January 30, 2010, following the collection of indoor air samples at NBHS, TRC re-sampled the four seep locations and analyzed the samples for VOCs. None of the measured concentrations exceeded MCP Method 1 GW-2 groundwater cleanup standards. These results are summarized in Table 1.

Temporary Subslab Soil Gas Sampling Points

On February 15, 2010 during the February school vacation, TRC collected soil vapor samples from temporary sample points installed at 11 locations throughout A-, C-, and D-Blocks of the NBHS building. The 11 temporary soil vapor sample points were installed using a hammer drill with a 5/8-inch diameter drill bit. Samples TVP-1 through TVP-11 were collected using evacuated stainless steel canisters. The sample locations are illustrated on Figure 2, and were designed to provide screening information regarding potential subslab vapor impacts in the vicinity of A-, C- and D-Blocks.

The results of the subslab soil gas analysis are summarized in Table 6. The analytical results show detectable concentrations of various VOCs in all 11 sampling locations. The soil vapor results are compared to a screening level threshold equal to 10-times the Indoor Air Threshold Values (IATVs; MassDEP, 2008), consistent with guidance provided by MassDEP (2009). Concentrations above the screening level thresholds were found in samples from four locations: TVP-1 (acetone, benzene, TCE, and isopropyl benzene), TVP-3 (benzene and TCE), TVP-10 (4-methyl 2-pentanone), and TVP-11 (acetone and PCE). TVP-1 and TVP-3 are located in A-Block. TVP-10 is located in the wood shop and TVP-11 is located in the auto shop.

Permanent Soil Gas Sampling Points

On February 19, 2010 during the February school vacation, following receipt of the temporary soil gas sample point results, TRC selected eight (8) locations for the installation of permanent soil gas sampling points. The permanent soil gas sampling points were installed consistent with the construction details provided in Figure 3. Seven of the eight locations (PVP-1 through PVP-5, PVP-7 and PVP-8) were previously used as temporary soil vapor sample locations. The eighth location (PVP-6) was installed in the Mechanical Room after surveying the area for utilities by ground penetrating radar (GPR). The permanent points were installed in the locations illustrated on Figure 2.

II IMMEDIATE RESPONSE ACTION STATUS REPORT (310 CMR 40.0425)

This IRA Status Report is organized according to the minimum information needs set forth under 310 CMR 40.0425(3)(a) through (e) of the MCP. This section describes activities performed subsequent to activities described in the IRA Plan submitted on March 22, 2010.

(a) The Status of Assessment and/or Remedial Actions

The detection of chlorinated VOCs in groundwater (MW-5), seep water (BRM-S-3 and FIP-S-1), and indoor air (TRC-IA-1) confirms a CEP in the vicinity of the Mechanical Room at NBHS. TRC continues to investigate possible CEPs in other locations within NBHS. The results of additional investigation activities to date are detailed in Section II(b) below. Laboratory data packages associated with samples discussed in the following section are included in Appendix A.

TRC's IRA Plan also outlined potential CEP mitigation measures to be undertaken during the IRA. Those mitigation measures implemented to date are described in the following section. Evaluation and implementation of some mitigation measures (e.g., HVAC operation, seep mitigation, etc.) is ongoing.

Floor Drain Intrusion Mitigation

Floor drains in the building are constructed with traps which typically hold standing water sufficient to prevent vapor migration through the drain system into the building. The traps in floor drains used infrequently could potentially dry out over time, allowing vapors to migrate from the sewer system into NBHS.

As detailed in the IRA Plan, on February 11, 2010, TRC personnel screened annular spaces in and around drains and floor cracks throughout the first floor of the NBHS building. During the screening event TRC noted several instances where VOC readings at drains were above background concentrations.

During a supplemental survey of floor drains in the vicinity of the Mechanical Room on April 21, 2010, traps in three of the 3-inch floor drains were found be dry. These drains were located in three "milk bar" rooms adjacent to individual house cafeteria serving areas within the NBHS building, rooms B-104, B-126 and B-133, respectively. To eliminate the potential pathway for vapor migration into the building, drain plugs were deployed in each of these drains.

The engineering plan provided in Appendix B indicates the locations of the floor drains in proximity to the Mechanical Room that were inspected and/or plugged on April 21, 2010. Additional floor drains may be plugged during future CEP mitigation activities if it is determined that the drains are used infrequently, have dried out and/or are providing a potential pathway for vapor intrusion.

Floor Crack Sealing

Several previously unidentified floor cracks were observed by TRC during a supplemental survey performed on April 21, 2010. Although visual inspection is not sufficient to determine the depth of the cracks, the majority of the cracks appeared to be surficial in nature. Two significant cracks observed on April 21, 2010 were sealed with a silicone sealant to prevent migration of subslab vapors. These two larger cracks are located within the NBHS building in the Kitchen (B-134) and a corridor (B-124). The approximate locations of these sealed floor cracks are illustrated on the NBHS engineering plan provided in Appendix C. Additional floor cracks may be sealed during future CEP mitigation activities if it is determined that the cracks could provide a potential pathway of concern for vapor intrusion.

Seepage Mitigation

During the February school vacation, TRC invited several specialty vendors to the NBHS Mechanical Room to view the seepage condition and provide a proposal for seep mitigation. The specialty vendor bids are currently being evaluated.

Evaluation of Other Potential Sources

TRC's initial evaluations suggest the potential for some of the VOCs in NBHS indoor air to originate from sources other than groundwater beneath the NBHS building. On February 3, 2010 TRC personnel conducted an initial inventory, including compiling available Material Safety Data Sheet (MSDS) information, of chemical products stored within or in the vicinity of the Mechanical Room. As documented in Appendix D, benzene and chlorinated solvent content was noted in a number of products. The potential for additional other interior and ambient (i.e., vehicle exhaust) sources also exists.

The City will work to manage potential interior sources of vapor from products stored in the Mechanical Room. Compilation of the MSDS information is ongoing and will be detailed in a future regulatory submittal. Following mitigation of the Mechanical Room seep, relocation of the products with benzene or chlorinated VOC content may be necessary to minimize the influence of chemical product use and storage practices upon indoor air concentration in the Mechanical Room.

(b) New Site Information and Data

Supplemental investigation activities completed under the IRA during the April 2010 school vacation included: additional indoor air sampling, additional monitoring well installation and groundwater sampling, and sampling of permanent soil gas points. Following review of the data, an updated indoor air risk evaluation was completed (Appendix E).

Supplemental Indoor Air Sampling

As detailed in the IRA Plan and as discussed above, indoor air samples TRC-IA-1 through TRC-IA-5 were collected from five rooms within the NBHS building in January 2010 (see Figure 2). Sampling of the Mechanical Room (B-114) detected the presence of chlorinated VOCs in the indoor air. Benzene, other petroleum-related compounds, and chlorinated VOCs were also detected in the indoor air sample in classroom A-3-112 from A-Block (Table 3). TRC's preliminary risk assessment indicated that there is no significant risk to the health of the building occupants based on criteria established by the MassDEP. The risk assessment was performed using methods consistent with those used to evaluate indoor air elsewhere at the site (i.e., Keith Middle School). Despite the initial finding of no significant risk, further investigations were conducted.

On April 20, 2010, TRC collected twelve (12) indoor air samples for analysis of VOCs via EPA Method TO-15. Samples were collected over a 24-hour period using evacuated stainless steel canisters. Since the sampling took place over the April school vacation week, the NBHS HVAC system was not in operation. The samples were collected from the following bottom floor interior locations at NBHS, illustrated on Figure 2:

- Mechanical Room (Room B-114) – Sample designation TRC-IA-1
- Classroom (A-3-112) – Sample designation TRC-IA-5
- Classroom (A-4-115) – Sample designation TRC-IA-6
- Classroom (A-4-105) – Sample designation TRC-IA-7
- Classroom (A-3-115) – Sample designation TRC-IA-8
- Classroom (A-3-105) – Sample designation TRC-IA-9
- Classroom (A-2-115) – Sample designation TRC-IA-10
- Classroom (A-2-105) – Sample designation TRC-IA-11
- Classroom (A-1-116) – Sample designation TRC-IA-12
- Classroom (A-2-112) – Sample designation TRC-IA-13
- Classroom (A-1-110) – Sample designation TRC-IA-14
- Lecture Room (D-120) – Sample designation TRC-IA-15

The results of the April 20, 2010 indoor air sample analyses, summarized in Table 3, are compared to threshold screening levels[2] (MassDEP, 2009).

- Ten of the twelve indoor air samples collected on April 2010 had no VOCs detected in excess of screening thresholds.

- Sample TRC-IA-1 (Mechanical Room) detected the presence of benzene, cis-1,2-DCE, TCE, and VC above the screening thresholds at slightly higher concentrations of each

[2] The MassDEP has established indoor air screening levels to indicate when additional characterization is appropriate at a site. The screening levels are set at Hazard Quotient (HQ) of 0.2 and excess lifetime cancer risk (ELCR) of 1E-06. A site-specific evaluation is recommended in situations where these screening levels are exceeded.

relative to the January 31, 2010 sample collected at this location. No additional VOCs were detected in excess of screening thresholds.

- Sample TRC-IA-5 (Classroom A-3-112) exhibited concentrations of benzene and VC exceeding the screening thresholds on January 31, 2010. However, re-sampling of Classroom A-3-112 (TRC-IA-5) on April 20, 2010 did not detect the presence of benzene or VC in excess of screening thresholds. Furthermore, subsurface VOC impacts have not been found in the vicinity of this room and no link has been found between the concentrations measured in the indoor air of the classroom in January 2010 and the subsurface environment in this location. No VOCs in sample TRC-IA-5 collected in April 2010 exceeded screening thresholds (see Table 3).

- Sample TRC-IA-15 (Lecture Room) exhibited benzene (4.48 $\mu g/m^3$), PCE (1.76 $\mu g/m^3$), and total xylenes (25.49 $\mu g/m^3$) in excess of screening thresholds. While the investigation in this area of the NBHS building is ongoing, the potential for some of the VOCs in indoor air to originate from subsurface impacts exists. However, given the proximity of sample location TRC-IA-15 to the Auto Shop (D-116), the potential also exists for VOCs in indoor air to originate from other sources, such as aerosol brake cleaning products and degreasing products[3].

- No other VOCs in sample TRC-IA-15 exceeded screening thresholds (see Table 3)

TRC evaluated the indoor air results by performing site-specific risk and hazard calculations for each room where an indoor air sample had been collected. The risk hazard calculations, provided in Appendix E, assume a chronic worker exposure scenario (8 hours of exposure per day, 250 days per year for 27 years). The calculations indicated that risks and hazards are less than the MCP Risk Limits of an Excess Lifetime Cancer Risk (ELCR) of 1E-05 and a Hazard Index (HI) of 1 for each room evaluated. The site-specific risk and hazard calculation protocol is consistent with that conducted for the neighboring Keith Middle School for VOCs and PCBs.

The evaluation indicates that, based on the sampling conducted in January and April 2010, there is no IH condition or chronic risk/hazard above MCP risk limits associated with current indoor air exposures. All compounds detected in indoor air were included in the risk and hazard calculations even though some of the detections may be associated with VOCs sources unrelated to vapor intrusion. To assist in distinguishing the relative contribution of vapor intrusion to the measured indoor air concentrations, fate and transport modeling of soil gas to indoor air concentrations conducted for the Lecture Room and Classroom A-3-112 indicates that only a small fraction of the measured indoor air concentrations are likely to be associated with a complete vapor intrusion pathway. As more site-specific data are gathered, VOCs identified as

[3] On May 6, 2010, TRC initiated an inventory of the products used and/or stored in the Auto Shop that may contribute to the VOC concentrations measured in the indoor air sample collected from the nearby Lecture Room (TRC-IA-15). TRC also interviewed Auto Shop staff regarding common work practices associated with products identified as potentially contributing VOCs to the indoor air. The results of further characterization sampling, product inventory, and interviews will be provided in a subsequent regulatory submittal.

being related to potential non-vapor intrusion sources may be eliminated in future risk evaluations.

Supplemental Well Installation and Groundwater Sampling

As described in the IRA Plan, groundwater samples collected in January and February 2010 detected chlorinated VOCs above MCP Method 1 GW-2 groundwater cleanup standards in monitoring well MW-7, located in front of the NBHS building near the flagpole. During this IRA status period, TRC evaluated the lateral extent of groundwater impacts observed in MW-7.

On April 2, 2010, TRC installed five (5) monitoring wells in the vicinity of the flagpole island surrounding monitoring well MW-7. The newly installed wells were surveyed by Land Planning of Hanson, Massachusetts on April 2, 2010. Well installation logs for the newly installed monitoring wells are provided in Appendix F.

TRC developed these wells and collected samples for VOC analysis in accordance with EPA Region 1 low-flow sampling techniques. Concurrently, TRC also sampled several existing TRC wells on the NBHS campus in the vicinity of the Mechanical Room, also by low-flow procedures. A total of ten (10) monitoring wells were sampled during the period from April 7 through April 9, 2010. The wells sampled are identified below and their locations are illustrated on Figure 2. Groundwater sampling logs associated with the April 2010 sampling event are provided in Appendix G.

- Existing Wells:
    - MW-4
    - MW-5
    - MW-7
    - MW-11
    - MW-18
- Newly Installed Wells:
    - MW-20
    - MW-21
    - MW-22
    - MW-23
    - MW-24

The groundwater samples were submitted to Alpha for analysis of VOCs. The results of these analyses are summarized in Table 2. No VOCs were detected in excess of MCP Method 1 GW-2 groundwater standards in eight out of the ten monitoring wells sampled in April 2010. The April 2010 sampling of MW-7 detected concentrations of one chlorinated VOC (PCE) above the MCP Method 1 GW-2 groundwater cleanup standard. In addition, VC was detected in excess of its

applicable MCP Method 1 GW-2 groundwater standard in newly installed monitoring well MW-24, located west of the entrance into the E-Block lobby (E-124) and downgradient of MW-7.

Chlorinated compounds (cis-1,2-DCE and/or TCE) were detected in monitoring wells MW-5 and MW-7 at concentrations similar to previous sampling rounds. Groundwater samples collected from newly installed monitoring wells MW-20, MW-22 (including the field duplicate) and MW-24 also exhbited concentrations of vinyl chloride, cis-1,2-DCE, p-isopropyltoluene (p-cymene) and/or TCE. The results from wells in the vicinity of MW-7 show that the area around MW-7 appears to represent the source area of a relatively small area of chlorinated VOC impacts.

Supplemental Groundwater Elevation Gauging

On February 17, 2010, TRC gauged the monitoring wells throughout the NBHS campus. An interpreted groundwater contour map for this gauging event is provided in Figure 4. Consistent with historic well gauging data, the groundwater flows from north to south across the NBHS campus. In addition, localized groundwater mounding was observed in the vicinity of the B-Block, immediately north of the Mechanical Room.

The extensive underdrain system throughout the NBHS building appears to direct groundwater to the storm sewer during high water events, and appears to influence the contour of the water table.

TRC gauged the new and previously installed monitoring wells prior to collection of groundwater samples on April 7, 2010. Groundwater elevation data are provided in Table 7. Unless noted otherwise in Table 7, the monitoring wells were all gauged on April 7, 2010. TRC prepared a revised interpreted groundwater contour map, illustrated in Figure 5, which depicts a change in the groundwater conditions. According to preliminary data available from the National Oceanic and Atmospheric Administration (NOAA), the City of New Bedford received 6.84 inches of rainfall in the approximately two week period and a total of 11.77 inches of rainfall in the one month period prior to well gauging activities on April 7, 2010. The significant amount of rainfall prior to gauging is an indication that the contours illustrated in Figure 5 reflect, at a minimum, a seasonal high groundwater elevation. Further evaluation of the groundwater elevation at the NBHS campus was undertaken to better understand average groundwater elevations and groundwater elevation fluctuations at the Site.

TRC conducted a third synoptic well gauging event at the NBHS campus on May 17, 2010. Groundwater elevation data are provided in Table 7. TRC prepared a revised interpreted groundwater contour map, illustrated in Figure 6. As anticipated, the revised groundwater contour map depicts a drop in the groundwater elevation throughout the NBHS campus when compared to the April 7, 2010 gauging event. The groundwater mounding, present in the vicinity of the Mechanical Room in February 2010, is not present based on the May 17, 2010 gauging results. Groundwater flow continues to generally trend from north to south across the NBHS campus, while shifting to a more southwesterly direction in the southern portion of the campus.

Camera Inspection of Sanitary Line

On March 9, 2010, in an effort to confirm infiltration of groundwater into the sanitary sewer line, the City conducted a camera investigation of the majority of the sanitary sewer line between manholes MH-2 (location of sample SS-MH-1) and MH-5 (manhole located between samples SS-MH-3 and SS-MH-4). The recording of the camera investigation was reviewed by TRC on March 28, 2010. A summary of the TRC interpretation is presented in Appendix H. The Site Utility Plan included in Appendix H illustrates the manholes and pipe section included in the camera investigation.

Due to the amount of flowing water within the sanitary line, it was not feasible to determine whether groundwater was infiltrating the pipe during the camera investigation. However, mineral deposits noted along the bottom and sides of the pipe section between manholes MH-2 and MH-3 may indicate historic infiltration of groundwater. In addition, damage to the sanitary sewer line was observed approximately five feet upstream of manhole MH-3 and five feet downstream of manhole MH-4. The damage to the pipe in these areas was judged to be significant enough to allow infiltration of groundwater to the sanitary line.

TRC will continue to evaluate the influence and potential impact of groundwater on the sanitary sewer system. Further sampling of the sanitary sewer line may be required and will be reported as part of a future regulatory submittal.

Supplemental Soil Gas Sampling

Additional subslab vapor sampling was performed during this status period to supplement previous data. With one exception, the samples were collected from locations that were sampled in February 2010. On April 9, 2010, TRC collected a soil vapor sample (PVP-6) from the permanent soil gas point in the Mechanical Room (see Figure 2). A soil vapor sample was not previously collected for the Mechanical Room during the February 2010 sampling event due to utility obstructions.

All eight permanent soil gas points were sampled by TRC on April 20, 2010. The samples were collected using evacuated stainless steel canisters consistent with the methods employed during the sampling of the temporary soil gas points described in the IRA Plan. The soil vapor samples were submitted to Alpha for analysis by EPA Method TO-15.

The results of the subslab soil gas analysis are summarized in Table 6. The analytical results show detectable concentrations of various VOCs at all eight sampling locations. The soil vapor results are compared to a screening level threshold equal to 10-times the IATVs (MassDEP, 2008), consistent with guidance provided by MassDEP (2009). No VOCs were detected above the screening level thresholds in six out of the eight permanent vapor points. VOCs were found above screening level thresholds in two samples as follows:

- PVP-6 (Mechanical Room), during both the April 9, 2010 and April 20, 2010 sampling events, and PVP-8 (Auto Shop). On April 9, 2010, sample PVP-6 exhibited

concentrations of 1,1-dichloroethene (1,1-DCE), cis-1,2-DCE, PCE, trans-1,2-DCE, TCE, and VC above threshold screening values. On April 20, 2010, each of these compounds, with the exception of PCE, was again detected above threshold screening levels.

- Sample PVP-8 exhibited PCE in excess of the applicable threshold screening level. The previously detected elevated concentration of acetone in the Auto Shop was not repeated during the April 20, 2010 sampling event.

- Previous detections of VOC above screening level thresholds at locations TVP-1 (Classroom A-4-115), TVP-3 (Classroom A-3-115) and TVP-10 (Wood Shop) were not confirmed during the April 20, 2010 sampling event as detectable concentrations of VOCs in samples PVP-1 (Classroom A-4-115), PVP-2 (Classroom A-3-115), and PVP-7 (Wood Shop) were all below threshold screening values (Table 6).

Due to the presence of VOCs in soil vapors above soil vapor threshold screening levels in the Mechanical Room and VOCs in indoor air above threshold screening levels in the Mechanical Room, TRC is evaluating seep mitigation measures. Follow-up sampling will be employed to measure the performance of the selected mitigation measure.

Due to the presence of VOCs in soil vapors above soil vapor threshold screening levels in the Auto Shop and VOCs in indoor air above threshold screening levels in the Lecture Room immediately adjacent to the Auto Shop, TRC is evaluating potential follow-up sampling for additional characterization. On May 6, 2010, TRC initiated an inventory of the products used and/or stored in the Auto Shop that may contribute to the VOC concentrations measured in the indoor air sample collected from the nearby Lecture Room (TRC-IA-15). TRC will continue to evaluate common work practices associated with products identified as potentially contributing VOCs to the indoor air. The results of further characterization sampling, product inventory and interviews will be provided in a subsequent regulatory submittal. A preliminary summary of the product inventory is included in Appendix D.

Fact Sheet

TRC prepared an updated version of the February 5, 2010 Fact Sheet, which the City published on March 19, 2010. The Fact Sheet informed the public that it is safe to occupy the high school, provided a description of the investigations completed to date, described the next steps in response actions, and identified where additional information could be obtained from the City. A copy of the Fact Sheet is provided in Appendix I.

TRC is currently working with the City to further update the Fact Sheet, which the City hopes to publish in May 2010. This and any future Fact Sheets that relate to this RTN will be included with future regulatory submittals.

(c) Plans for the Management of Investigation or Remediation Waste

IRA activities have been limited to assessment and mitigation measures at the NBHS campus. These activities have generated a limited amount of investigation-derived wastes. However, no remediation waste or remedial additives have been generated to date.

During well development and purging activities in February 2010, approximately 2½ 55-gallon drums with well development water and purge water were generated. These drums were temporarily staged onsite prior to offsite disposal on March 25, 2010. A copy of the associated waste shipping manifest is included in Appendix J.

Additional monitoring wells were installed and sampled at the NBHS campus in April 2010. Well development and purging activities generated approximately three (3) 55-gallon drums of remediation wastewater. These drums were temporarily staged onsite prior to offsite disposal on April 26, 2010. A copy of the associated waste shipping manifest is included in Appendix J.

There have been no other remediation wastes generated under this IRA.

(d) MassDEP-Required Information

An IH screening evaluation was performed and submitted with the IRA Plan and an updated version is included herein (see Appendix E). No additional information has been requested by MassDEP.

(e) LSP Opinion

The objective of this IRA was to characterize groundwater, seep water, soil vapor and indoor air to determine if vapor migration has occurred, characterize VOCs in the groundwater, storm sewer lines, and sanitary sewer lines to determine if any VOC migration from the groundwater to the storm and sanitary sewer infrastructure has occurred and implement mitigation measure associated with an SRM condition at the NBHS building.

This IRA Status Report has been prepared in accordance with 310 CMR 40.0425 as set forth in the MCP.

David M. Sullivan

David M. Sullivan, LSP, CHMM
TRC Environmental Corporation
Licensed Site Professional No. 1488

May 24, 2010
Date

Stamp

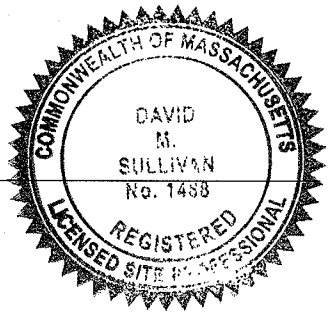

III REFERENCES

EPA, 2009 Risk Management Program Guidance for Offsite Consequence Analysis, United States Environmental Protection Agency, Office of Solid Waste and Emergency Response, EPA 550-B-99-009, March 2009.

MassGIS, 2008. Massachusetts Geographic Information System (MassGIS), On-line MassDEP Priority Resource Map. Accessed July 28, 2008. http://maps.massgis.state.ma.us/21e/viewer.htm

MassDEP, 2008. Risk Management Criteria - MassDEP Indoor Air Threshold Values for the Evaluation of a Vapor Intrusion Pathway, Attachment C, updated June 26, 2008.

MassDEP, 2009. Indoor Air Guidance. June 2009 Draft – For Discussion Purposes Only.

TRC, 2008. *Data Summary Report, New Bedford High School, New Bedford, Massachusetts.* Prepared for: City of New Bedford Department of Environmental Stewardship. Prepared by: TRC Environmental Corporation. December 2008.

TRC, 2010 *Immediate Response Action Plan, New Bedford High School Substantial Release Migration / Critical Exposure Pathway, 230 Hathaway Boulevard, New Bedford, Massachusetts.* Prepared for: City of New Bedford Department of Environmental Stewardship. Prepared by: TRC Environmental Corporation. March 2010.

TABLES

Table 1
Summary of Analytical Results for Aqueous Seep Samples -- December 2009 and January 2010
New Bedford High School
New Bedford, Massachusetts

Analysis	Analyte	Sample ID:		BRM-S-1			BRM-S-2			BRM-S-3				FIP-S-1		
		Sample Date:		12/2/2009	1/7/2010	1/30/2010	12/2/2009	1/7/2010	1/30/2010	12/2/2009	1/7/2010	1/30/2010	1/30/2010	12/2/2009	1/7/2010	1/30/2010
		GW-2	GW-3										Field Dup			
VOCs																
(ug/L)	Acetone	50,000	50,000	50 U	50 U	5.0 U	50 U	50 U	5.0 U	50 U	50 U	5.0 U	5.0 U	50 U	50 U	5.0 U
	tert-Amyl Methyl Ether (TAME)	NS	NS	0.50 U	0.50 U	2.0 U	0.50 U	0.50 U	2.0 U	0.50 U	0.50 U	2.0 U	2.0 U	0.50 U	0.50 U	2.0 U
	Benzene	2,000	10,000	1.0 U	1.0 U	1.0 U	1.0 U	1.0 U	1.0 U	1.0 U	1.0 U	1.0 U	1.0 U	1.0 U	1.0 U	1.0 U
	Bromobenzene	NS	NS	1.0 U	1.0 U	1.0 U	1.0 U	1.0 U	1.0 U	1.0 U	1.0 U	1.0 U	1.0 U	1.0 U	1.0 U	1.0 U
	Bromochloromethane	NS	NS	1.0 U	1.0 U	1.0 U	1.0 U	1.0 U	1.0 U	1.0 U	1.0 U	1.0 U	1.0 U	1.0 U	1.0 U	1.0 U
	Bromodichloromethane	6	50,000	1.0 U	5.0 U	1.0 U	1.0 U	5.0 U	1.0 U	1.0 U	5.0 U	1.0 U	1.0 U	1.0 U	5.0 U	1.0 U
	Bromoform	700	50,000	5.0 U	10 U	1.0 U	5.0 U	10 U	1.0 U	5.0 U	10 U	1.0 U	1.0 U	5.0 U	10 U	1.0 U
	Bromomethane	7	800	2.0 U	2.0 U	5.0 U	2.0 U	2.0 U	5.0 U	2.0 U	2.0 U	5.0 U	5.0 U	2.0 U	2.0 U	5.0 U
	2-Butanone (MEK)	50,000	50,000	20 U	20 U	10 U	20 U	20 U	10 U	20 U	20 U	10 U	10 U	20 U	20 U	10 U
	n-Butylbenzene	7,000[1]	50,000[1]	1.0 U	1.0 U	1.0 U	1.0 U	1.0 U	1.0 U	1.0 U	1.0 U	1.0 U	1.0 U	1.0 U	1.0 U	1.0 U
	sec-Butylbenzene	7,000[1]	50,000[1]	1.0 U	1.0 U	1.0 U	1.0 U	1.0 U	1.0 U	1.0 U	1.0 U	1.0 U	1.0 U	1.0 U	1.0 U	1.0 U
	tert-Butylbenzene	7,000[1]	50,000[1]	1.0 U	1.0 U	1.0 U	1.0 U	1.0 U	1.0 U	1.0 U	1.0 U	1.0 U	1.0 U	1.0 U	1.0 U	1.0 U
	tert-Butyl Ethyl Ether (TBEE)	NS	NS	0.50 U	0.50 U	2.0 U	0.50 U	0.50 U	2.0 U	0.50 U	0.50 U	2.0 U	2.0 U	0.50 U	0.50 U	2.0 U
	Carbon Disulfide	NS	NS	3.0 U	5.0 U	1.0 U	3.0 U	5.0 U	1.0 U	3.0 U	5.0 U	1.0 U	1.0 U	3.0 U	5.0 U	1.0 U
	Carbon Tetrachloride	2	5,000	1.0 U	1.0 U	1.0 U	1.0 U	1.0 U	1.0 U	1.0 U	1.0 U	1.0 U	1.0 U	1.0 U	1.0 U	1.0 U
	Chlorobenzene	200	1,000	1.0 U	1.0 U	1.0 U	1.0 U	1.0 U	1.0 U	1.0 U	**9.5**	1.0 U	1.0 U	1.0 U	1.0 U	1.0 U
	Chlorodibromomethane	20	50,000	0.50 U	10 U	1.0 U	0.50 U	10 U	1.0 U	0.50 U	10 U	1.0 U	1.0 U	0.50 U	10 U	1.0 U
	Chloroethane	NS	NS	2.0 U	2.0 U	1.0 U	2.0 U	2.0 U	1.0 U	2.0 U	2.0 U	1.0 U	1.0 U	2.0 U	2.0 U	1.0 U
	Chloroform	50	20,000	2.0 U	2.0 U	1.0 U	2.0 U	2.0 U	1.0 U	2.0 U	2.0 U	1.0 U	1.0 U	2.0 U	2.0 U	1.0 U
	Chloromethane	NS	NS	2.0 U	2.0 U	1.0 U	2.0 U	2.0 U	1.0 U	2.0 U	2.0 U	1.0 U	1.0 U	2.0 U	2.0 U	1.0 U
	2-Chlorotoluene	NS	NS	1.0 U	1.0 U	1.0 U	1.0 U	1.0 U	1.0 U	1.0 U	1.0 U	1.0 U	1.0 U	1.0 U	1.0 U	1.0 U
	4-Chlorotoluene	NS	NS	1.0 U	1.0 U	1.0 U	1.0 U	1.0 U	1.0 U	1.0 U	1.0 U	1.0 U	1.0 U	1.0 U	1.0 U	1.0 U
	1,2-Dibromo-3-chloropropane (DBCP)	NS	NS	5.0 U	10 U	5.0 U	5.0 U	10 U	5.0 U	5.0 U	10 U	5.0 U	5.0 U	5.0 U	10 U	5.0 U
	1,2-Dibromoethane (EDB)	2	50,000	0.50 U	0.50 U	1.0 U	0.50 U	0.50 U	1.0 U	0.50 U	0.50 U	1.0 U	1.0 U	0.50 U	0.50 U	1.0 U
	Dibromomethane	NS	NS	1.0 U	1.0 U	1.0 U	1.0 U	1.0 U	1.0 U	1.0 U	1.0 U	1.0 U	1.0 U	1.0 U	1.0 U	1.0 U
	1,2-Dichlorobenzene	2,000	2,000	1.0 U	1.0 U	1.0 U	1.0 U	1.0 U	1.0 U	1.0 U	1.0 U	1.0 U	1.0 U	1.0 U	1.0 U	1.0 U
	1,3-Dichlorobenzene	2,000	50,000	1.0 U	1.0 U	1.0 U	1.0 U	1.0 U	1.0 U	1.0 U	**1.6**	1.0 U	1.0 U	1.0 U	1.0 U	1.0 U
	1,4-Dichlorobenzene	200	8,000	1.0 U	1.0 U	1.0 U	1.0 U	1.0 U	1.0 U	1.0 U	**6.8**	1.0 U	1.0 U	1.0 U	1.0 U	1.0 U
	Dichlorodifluoromethane (Freon 12)	NS	NS	2.0 U	2.0 U	1.0 U	2.0 U	2.0 U	1.0 U	2.0 U	2.0 U	1.0 U	1.0 U	2.0 U	2.0 U	1.0 U
	1,1-Dichloroethane	1,000	20,000	1.0 U	1.0 U	1.0 U	1.0 U	1.0 U	1.0 U	1.0 U	1.0 U	1.0 U	1.0 U	1.0 U	1.0 U	1.0 U
	1,2-Dichloroethane	5	20,000	1.0 U	1.0 U	1.0 U	1.0 U	1.0 U	1.0 U	1.0 U	1.0 U	1.0 U	1.0 U	1.0 U	1.0 U	1.0 U
	1,1-Dichloroethylene	80	30,000	1.0 U	1.0 U	1.0 U	1.0 U	1.0 U	1.0 U	1.0 U	1.0 U	1.0 U	1.0 U	1.0 U	1.0 U	1.0 U
	cis-1,2-Dichloroethylene	100	50,000	1.0 U	1.0 U	1.0 U	1.0 U	1.0 U	1.0 U	**54**	**180**	**24**	**23**	1.0 U	**5.6**	**7.2**
	trans-1,2-Dichloroethylene	90	50,000	1.0 U	1.0 U	1.0 U	1.0 U	1.0 U	1.0 U	**14**	**57**	**8.2**	**8.1**	1.0 U	**1.0**	**1.4**
	1,2-Dichloropropane	3	50,000	1.0 U	1.0 U	1.0 U	1.0 U	1.0 U	1.0 U	1.0 U	1.0 U	1.0 U	1.0 U	1.0 U	1.0 U	1.0 U
	1,3-Dichloropropane	NS	NS	0.50 U	0.50 U	1.0 U	0.50 U	0.50 U	1.0 U	0.50 U	0.50 U	1.0 U	1.0 U	0.50 U	0.50 U	1.0 U
	2,2-Dichloropropane	NS	NS	1.0 U	1.0 U	1.0 U	1.0 U	1.0 U	1.0 U	1.0 U	1.0 U	1.0 U	1.0 U	1.0 U	1.0 U	1.0 U
	1,1-Dichloropropene	NS	NS	2.0 U	2.0 U	1.0 U	2.0 U	2.0 U	1.0 U	2.0 U	2.0 U	1.0 U	1.0 U	2.0 U	2.0 U	1.0 U
	cis-1,3-Dichloropropene	10[2]	200[2]	0.50 U	5.0 U	0.50 U	0.50 U	5.0 U	0.50 U	0.50 U	5.0 U	0.50 U	0.50 U	0.50 U	5.0 U	0.50 U
	trans-1,3-Dichloropropene	10[2]	200[2]	0.50 U	5.0 U	0.50 U	0.50 U	5.0 U	0.50 U	0.50 U	5.0 U	0.50 U	0.50 U	0.50 U	5.0 U	0.50 U
	Diethyl Ether	NS	NS	2.0 U	2.0 U	2.0 U	2.0 U	2.0 U	2.0 U	2.0 U	2.0 U	2.0 U	2.0 U	2.0 U	2.0 U	2.0 U
	Diisopropyl Ether (DIPE)	NS	NS	0.50 U	0.50 U	2.0 U	0.50 U	0.50 U	2.0 U	0.50 U	0.50 U	2.0 U	2.0 U	0.50 U	0.50 U	2.0 U
	1,4-Dioxane	6,000	50,000	50 U	50 U	100 U	50 U	50 U	100 U	50 U	50 U	100 U	100 U	50 U	50 U	100 U
	Ethylbenzene	20,000	5,000	1.0 U	1.0 U	1.0 U	1.0 U	1.0 U	1.0 U	1.0 U	1.0 U	1.0 U	1.0 U	1.0 U	1.0 U	1.0 U
	Hexachlorobutadiene	1	3,000	1.0 U	1.0 U	0.50 U	1.0 U	1.0 U	0.50 U	1.0 U	1.0 U	0.50 U	0.50 U	1.0 U	1.0 U	0.50 U
	2-Hexanone (MBK)	NS	NS	10 U	10 U	1.0 U	10 U	10 U	1.0 U	10 U	10 U	1.0 U	1.0 U	10 U	10 U	1.0 U
	Isopropylbenzene (Cumene)	7,000[1]	50,000[1]	1.0 U	1.0 U	1.0 U	1.0 U	1.0 U	1.0 U	1.0 U	1.0 U	1.0 U	1.0 U	1.0 U	1.0 U	1.0 U
	p-Isopropyltoluene (p-Cymene)	7,000[1]	50,000[1]	1.0 U	1.0 U	1.0 U	1.0 U	1.0 U	1.0 U	1.0 U	1.0 U	1.0 U	1.0 U	1.0 U	1.0 U	1.0 U
	Methyl tert-Butyl Ether (MTBE)	50,000	50,000	1.0 U	1.0 U	2.0 U	1.0 U	1.0 U	2.0 U	1.0 U	1.0 U	2.0 U	2.0 U	1.0 U	1.0 U	2.0 U
	Methylene Chloride	10,000	50,000	5.0 U	5.0 U	1.0 U	5.0 U	5.0 U	1.0 U	5.0 U	5.0 U	1.0 U	1.0 U	5.0 U	5.0 U	1.0 U
	4-Methyl-2-pentanone (MIBK)	50,000	50,000	10 U	10 U	5.0 U	10 U	10 U	5.0 U	10 U	10 U	5.0 U	5.0 U	10 U	10 U	5.0 U
	Naphthalene	1,000	20,000	5.0 U	2.0 U	5.0 U	5.0 U	2.0 U	5.0 U	5.0 U	2.0 U	5.0 U	5.0 U	5.0 U	2.0 U	5.0 U
	n-Propylbenzene	7,000[1]	50,000[1]	1.0 U	1.0 U	1.0 U	1.0 U	1.0 U	1.0 U	1.0 U	1.0 U	1.0 U	1.0 U	1.0 U	1.0 U	1.0 U
	Styrene	100	6,000	1.0 U	1.0 U	1.0 U	1.0 U	1.0 U	1.0 U	1.0 U	1.0 U	1.0 U	1.0 U	1.0 U	1.0 U	1.0 U
	1,1,1,2-Tetrachloroethane	10	50,000	1.0 U	5.0 U	1.0 U	1.0 U	5.0 U	1.0 U	1.0 U	5.0 U	1.0 U	1.0 U	1.0 U	5.0 U	1.0 U
	1,1,2,2-Tetrachloroethane	9	50,000	0.50 U	0.50 U	2.0 U	0.50 U	0.50 U	2.0 U	0.50 U	0.50 U	2.0 U	2.0 U	0.50 U	0.50 U	2.0 U

Table 1
Summary of Analytical Results for Aqueous Seep Samples -- December 2009 and January 2010
New Bedford High School
New Bedford, Massachusetts

Analysis	Analyte	Sample ID:		BRM-S-1			BRM-S-2			BRM-S-3				FIP-S-1		
		Sample Date:		12/2/2009	1/7/2010	1/30/2010	12/2/2009	1/7/2010	1/30/2010	12/2/2009	1/7/2010	1/30/2010	1/30/2010	12/2/2009	1/7/2010	1/30/2010
		GW-2	GW-3										Field Dup			
	Tetrachloroethylene	50	30,000	1.0 U	1.0 U	1.0 U	1.0 U	1.0 U	1.0 U	1.0 U	1.0 U	1.0 U	1.0 U	1.0 U	1.0 U	1.0 U
	Tetrahydrofuran	NS	NS	10 U	10 U	5.0 U	10 U	10 U	5.0 U	10 U	10 U	5.0 U	5.0 U	10 U	10 U	5.0 U
	Toluene	50,000	40,000	1.0 U	1.0 U	1.0 U	1.0 U	1.0 U	1.0 U	1.0 U	1.0 U	1.0 U	1.0 U	1.0 U	1.0 U	1.0 U
	1,2,3-Trichlorobenzene	NS	NS	5.0 U	5.0 U	2.0 U	5.0 U	5.0 U	2.0 U	5.0 U	5.0 U	2.0 U	2.0 U	5.0 U	5.0 U	2.0 U
	1,2,4-Trichlorobenzene	2,000	50,000	5.0 U	1.0 U	2.0 U	5.0 U	1.0 U	2.0 U	5.0 U	1.0 U	2.0 U	2.0 U	5.0 U	1.0 U	2.0 U
	1,1,1-Trichloroethane	4,000	20,000	1.0 U	1.0 U	1.0 U	1.0 U	1.0 U	1.0 U	1.0 U	1.0 U	1.0 U	1.0 U	1.0 U	1.0 U	1.0 U
	1,1,2-Trichloroethane	900	50,000	1.0 U	1.0 U	1.0 U	1.0 U	1.0 U	1.0 U	1.0 U	1.0 U	1.0 U	1.0 U	1.0 U	1.0 U	1.0 U
	Trichloroethylene	30	5,000	1.0 U	1.0 U	1.0 U	1.0 U	1.0 U	1.0 U	1.0 U	**6.0**	**1.2**	**1.3**	1.0 U	1.0 U	1.0 U
	Trichlorofluoromethane (Freon 11)	NS	NS	2.0 U	2.0 U	2.0 U	2.0 U	2.0 U	2.0 U	2.0 U	2.0 U	2.0 U	2.0 U	2.0 U	2.0 U	2.0 U
	1,2,3-Trichloropropane	NS	NS	2.0 U	2.0 U	1.0 U	2.0 U	2.0 U	1.0 U	2.0 U	2.0 U	1.0 U	1.0 U	2.0 U	2.0 U	1.0 U
	1,2,4-Trimethylbenzene	7,000[1]	50,000[1]	1.0 U	1.0 U	1.0 U	1.0 U	1.0 U	1.0 U	1.0 U	1.0 U	1.0 U	1.0 U	1.0 U	1.0 U	1.0 U
	1,3,5-Trimethylbenzene	7,000[1]	50,000[1]	1.0 U	1.0 U	1.0 U	1.0 U	1.0 U	1.0 U	1.0 U	1.0 U	1.0 U	1.0 U	1.0 U	1.0 U	1.0 U
	Vinyl Chloride	2	50,000	2.0 U	2.0 U	1.0 U	2.0 U	2.0 U	1.0 U	**2.1**	**34**	**1.4**	**1.3**	2.0 U	2.0 U	**1.3**
	m+p Xylene	9,000	5,000	2.0 U	2.0 U	2.0 U	2.0 U	2.0 U	2.0 U	2.0 U	2.0 U	2.0 U	2.0 U	2.0 U	2.0 U	2.0 U
	o-Xylene	9,000	5,000	1.0 U	1.0 U	2.0 U	1.0 U	1.0 U	2.0 U	1.0 U	1.0 U	2.0 U	2.0 U	1.0 U	1.0 U	2.0 U
EPH																
(ug/L)	C9-C18 Aliphatics	5,000	50,000	150 U	NA	NA	150 U	NA	NA	150 U	NA	NA	NA	150 U	NA	NA
	C19-C36 Aliphatics	NS	50,000	**190**	NA	NA	150 U	NA	NA	150 U	NA	NA	NA	150 U	NA	NA
	C11-C22 Aromatics	50,000	5,000	100 U	NA	NA	100 U	NA	NA	100 U	NA	NA	NA	100 U	NA	NA
	Acenaphthene	NS	6,000	2.0 U	NA	NA	2.0 U	NA	NA	2.0 U	NA	NA	NA	2.0 U	NA	NA
	Acenaphthylene	10,000	40	2.0 U	NA	NA	2.0 U	NA	NA	2.0 U	NA	NA	NA	2.0 U	NA	NA
	Anthracene	NS	30	2.0 U	NA	NA	2.0 U	NA	NA	2.0 U	NA	NA	NA	2.0 U	NA	NA
	Benzo(a)anthracene	NS	1,000	2.0 U	NA	NA	2.0 U	NA	NA	2.0 U	NA	NA	NA	2.0 U	NA	NA
	Benzo(a)pyrene	NS	500	2.0 U	NA	NA	2.0 U	NA	NA	2.0 U	NA	NA	NA	2.0 U	NA	NA
	Benzo(b)fluoranthene	NS	400	2.0 U	NA	NA	2.0 U	NA	NA	2.0 U	NA	NA	NA	2.0 U	NA	NA
	Benzo(g,h,i)perylene	NS	20	2.0 U	NA	NA	2.0 U	NA	NA	2.0 U	NA	NA	NA	2.0 U	NA	NA
	Benzo(k)fluoranthene	NS	100	2.0 U	NA	NA	2.0 U	NA	NA	2.0 U	NA	NA	NA	2.0 U	NA	NA
	Chrysene	NS	70	2.0 U	NA	NA	2.0 U	NA	NA	2.0 U	NA	NA	NA	2.0 U	NA	NA
	Dibenz(a,h)anthracene	NS	40	2.0 U	NA	NA	2.0 U	NA	NA	2.0 U	NA	NA	NA	2.0 U	NA	NA
	Fluoranthene	NS	200	2.0 U	NA	NA	2.0 U	NA	NA	2.0 U	NA	NA	NA	2.0 U	NA	NA
	Fluorene	NS	40	2.0 U	NA	NA	2.0 U	NA	NA	2.0 U	NA	NA	NA	2.0 U	NA	NA
	Indeno(1,2,3-cd)pyrene	NS	100	2.0 U	NA	NA	2.0 U	NA	NA	2.0 U	NA	NA	NA	2.0 U	NA	NA
	2-Methylnaphthalene	2,000	20,000	2.0 U	NA	NA	2.0 U	NA	NA	2.0 U	NA	NA	NA	2.0 U	NA	NA
	Naphthalene	1,000	20,000	2.0 U	NA	NA	2.0 U	NA	NA	2.0 U	NA	NA	NA	2.0 U	NA	NA
	Phenanthrene	NS	10,000	2.0 U	NA	NA	2.0 U	NA	NA	2.0 U	NA	NA	NA	2.0 U	NA	NA
	Pyrene	NS	20	2.0 U	NA	NA	2.0 U	NA	NA	2.0 U	NA	NA	NA	2.0 U	NA	NA
PAHs																
(ug/L)	Acenaphthene	NS	6,000	0.30 U	NA	NA	0.30 U	NA	NA	0.30 U	NA	NA	NA	0.30 U	NA	NA
	Acenaphthylene	10,000	40	0.30 U	NA	NA	0.30 U	NA	NA	0.30 U	NA	NA	NA	0.30 U	NA	NA
	Anthracene	NS	30	0.20 U	NA	NA	0.20 U	NA	NA	0.20 U	NA	NA	NA	0.20 U	NA	NA
	Benzo(a)anthracene	NS	1,000	0.050 U	NA	NA	0.050 U	NA	NA	0.050 U	NA	NA	NA	0.050 U	NA	NA
	Benzo(a)pyrene	NS	500	0.10 U	NA	NA	0.10 U	NA	NA	0.10 U	NA	NA	NA	0.10 U	NA	NA
	Benzo(b)fluoranthene	NS	400	0.050 U	NA	NA	0.050 U	NA	NA	0.050 U	NA	NA	NA	0.050 U	NA	NA
	Benzo(g,h,i)perylene	NS	20	0.50 U	NA	NA	0.50 U	NA	NA	0.50 U	NA	NA	NA	0.50 U	NA	NA
	Benzo(k)fluoranthene	NS	100	0.20 U	NA	NA	0.20 U	NA	NA	0.20 U	NA	NA	NA	0.20 U	NA	NA
	Chrysene	NS	70	0.20 U	NA	NA	0.20 U	NA	NA	0.20 U	NA	NA	NA	0.20 U	NA	NA
	Dibenz(a,h)anthracene	NS	40	0.20 U	NA	NA	0.20 U	NA	NA	0.20 U	NA	NA	NA	0.20 U	NA	NA
	Fluoranthene	NS	200	0.50 U	NA	NA	0.50 U	NA	NA	0.50 U	NA	NA	NA	0.50 U	NA	NA
	Fluorene	NS	40	1.0 U	NA	NA	1.0 U	NA	NA	1.0 U	NA	NA	NA	1.0 U	NA	NA
	Indeno(1,2,3-cd)pyrene	NS	100	0.20 U	NA	NA	0.20 U	NA	NA	0.20 U	NA	NA	NA	0.20 U	NA	NA
	2-Methylnaphthalene	2,000	20,000	1.0 U	NA	NA	1.0 U	NA	NA	1.0 U	NA	NA	NA	1.0 U	NA	NA
	Naphthalene	1,000	20,000	1.0 U	NA	NA	1.0 U	NA	NA	1.0 U	NA	NA	NA	1.0 U	NA	NA
	Phenanthrene	NS	10,000	0.050 U	NA	NA	0.050 U	NA	NA	0.050 U	NA	NA	NA	0.050 U	NA	NA
	Pyrene	NS	20	1.0 U	NA	NA	1.0 U	NA	NA	1.0 U	NA	NA	NA	1.0 U	NA	NA
PCBs																
(ug/L)	Aroclor 1016	5	10	0.0500 U	NA	NA	0.0500 U	NA	NA	0.0500 U	NA	NA	NA	0.0500 U	NA	NA

Table 1
Summary of Analytical Results for Aqueous Seep Samples -- December 2009 and January 2010
New Bedford High School
New Bedford, Massachusetts

Analysis	Analyte	Sample ID:		BRM-S-1			BRM-S-2			BRM-S-3				FIP-S-1		
		Sample Date:		12/2/2009	1/7/2010	1/30/2010	12/2/2009	1/7/2010	1/30/2010	12/2/2009	1/7/2010	1/30/2010	1/30/2010	12/2/2009	1/7/2010	1/30/2010
		GW-2	GW-3										Field Dup			
	Aroclor 1221	5	10	0.0500 U	NA	NA	0.0500 U	NA	NA	0.0500 U	NA	NA	NA	0.0500 U	NA	NA
	Aroclor 1232	5	10	0.0500 U	NA	NA	0.0500 U	NA	NA	0.0500 U	NA	NA	NA	0.0500 U	NA	NA
	Aroclor 1242	5	10	0.0500 U	NA	NA	0.0500 U	NA	NA	0.0500 U	NA	NA	NA	0.0500 U	NA	NA
	Aroclor 1248	5	10	0.0500 U	NA	NA	0.0500 U	NA	NA	0.0500 U	NA	NA	NA	0.0500 U	NA	NA
	Aroclor 1254	5	10	0.0500 U	NA	NA	0.0500 U	NA	NA	0.0500 U	NA	NA	NA	0.0500 U	NA	NA
	Aroclor 1260	5	10	0.0500 U	NA	NA	0.0500 U	NA	NA	0.0500 U	NA	NA	NA	0.0500 U	NA	NA
	Total PCB Amount	5	10	0.0500 U	NA	NA	0.0500 U	NA	NA	0.0500 U	NA	NA	NA	0.0500 U	NA	NA
Metals, total																
(ug/L)	Antimony	NS	8,000	40 U	NA	NA	40 U	NA	NA	40 U	NA	NA	NA	40 U	NA	NA
	Arsenic	NS	900	**9.2**	NA	NA	**11**	NA	NA	**10**	NA	NA	NA	**5.8**	NA	NA
	Barium	NS	50,000	**98**	NA	NA	**76**	NA	NA	**140**	NA	NA	NA	50 U	NA	NA
	Beryllium	NS	200	2.5 U	NA	NA	2.5 U	NA	NA	2.5 U	NA	NA	NA	2.5 U	NA	NA
	Cadmium	NS	4	2.5 U	NA	NA	2.5 U	NA	NA	2.5 U	NA	NA	NA	2.5 U	NA	NA
	Chromium	NS	300	5.0 U	NA	NA	5.0 U	NA	NA	5.0 U	NA	NA	NA	5.0 U	NA	NA
	Lead	NS	10	7.5 U	NA	NA	7.5 U	NA	NA	**220**	NA	NA	NA	7.5 U	NA	NA
	Mercury	NS	20	0.10 U	NA	NA	0.10 U	NA	NA	0.10 U	NA	NA	NA	0.10 U	NA	NA
	Nickel	NS	200	5.0 U	NA	NA	5.0 U	NA	NA	5.0 U	NA	NA	NA	5.0 U	NA	NA
	Selenium	NS	100	25 U	NA	NA	25 U	NA	NA	25 U	NA	NA	NA	25 U	NA	NA
	Silver	NS	7	2.5 U	NA	NA	2.5 U	NA	NA	2.5 U	NA	NA	NA	2.5 U	NA	NA
	Thallium	NS	3,000	30 U	NA	NA	30 U	NA	NA	30 U	NA	NA	NA	30 U	NA	NA
	Vanadium	NS	4,000	25 U	NA	NA	25 U	NA	NA	25 U	NA	NA	NA	25 U	NA	NA
	Zinc	NS	900	**260**	NA	NA	**51**	NA	NA	**150**	NA	NA	NA	**21**	NA	NA
Metals, dissolved																
(ug/L)	Antimony	NS	8,000	40 U	NA	NA	40 U	NA	NA	40 U	NA	NA	NA	40 U	NA	NA
	Arsenic	NS	900	**6.5**	NA	NA	**8.9**	NA	NA	**8.4**	NA	NA	NA	**6.0**	NA	NA
	Barium	NS	50,000	**79**	NA	NA	**73**	NA	NA	**67**	NA	NA	NA	50 U	NA	NA
	Beryllium	NS	200	2.5 U	NA	NA	2.5 U	NA	NA	2.5 U	NA	NA	NA	2.5 U	NA	NA
	Cadmium	NS	4	2.5 U	NA	NA	2.5 U	NA	NA	2.5 U	NA	NA	NA	2.5 U	NA	NA
	Chromium	NS	300	5.0 U	NA	NA	5.0 U	NA	NA	5.0 U	NA	NA	NA	5.0 U	NA	NA
	Lead	NS	10	7.5 U	NA	NA	7.5 U	NA	NA	7.5 U	NA	NA	NA	7.5 U	NA	NA
	Mercury	NS	20	0.10 U	NA	NA	0.10 U	NA	NA	0.10 U	NA	NA	NA	0.10 U	NA	NA
	Nickel	NS	200	5.0 U	NA	NA	5.0 U	NA	NA	5.0 U	NA	NA	NA	5.0 U	NA	NA
	Selenium	NS	100	25 U	NA	NA	25 U	NA	NA	25 U	NA	NA	NA	25 U	NA	NA
	Silver	NS	7	2.5 U	NA	NA	2.5 U	NA	NA	2.5 U	NA	NA	NA	2.5 U	NA	NA
	Thallium	NS	3,000	30 U	NA	NA	30 U	NA	NA	30 U	NA	NA	NA	30 U	NA	NA
	Vanadium	NS	4,000	25 U	NA	NA	25 U	NA	NA	25 U	NA	NA	NA	25 U	NA	NA
	Zinc	NS	900	**160**	NA	NA	**43**	NA	NA	**48**	NA	NA	NA	**25**	NA	NA

Notes:
ug/L - micrograms per liter.
NA - Sample not analyzed for the listed analyte.
NS - No MassDEP standards exist for this compound.
U - Compound was not detected at specified quantitation limit.
Values in **Bold** indicate the compound was detected.
Values shown in Bold and shaded type exceed one or more of the listed MassDEP Method 1 standards
VOCs - Volatile Organic Compounds.
EPH - Extractable Petroleum Hydrocarbons.
PAHs - Polynuclear Aromatic Hydrocarbons.
PCBs - Polychlorinated Biphenyls.
(1) - MassDEP Method 1 standards for C9-C10 aromatic hydrocarbons used.
(2) - MassDEP Method 1 standards for 1,3-Dichloropropene used.

Table 2
Summary of Analytical Results for Groundwater Samples -- 2010
New Bedford High School
New Bedford, Massachusetts

Analysis	Analyte		Sample ID:	MW-4			MW-5				MW-6		MW-7				MW-8A	MW-11		MW-12
			Sample Date:	1/6/2010	2/17/2010	4/9/2010	1/6/2010	1/6/2010 Field Dup	2/17/2010	4/8/2010	1/7/2010	2/18/2010	1/7/2010	2/17/2010	2/17/2010 Field Dup	4/7/2010	2/18/2010	2/19/2010	4/7/2010	2/18/2010
		GW-2	GW-3																	
VOCs (ug/L)	Methylene Chloride	10,000	50,000	5.0 U	5.0 U	5.0 U	5.0 U	5.0 U	5.0 U	5.0 U	5.0 U	5.0 U	5.0 U	5.0 U	5.0 U	5.0 U	5.0 U	5.0 U	5.0 U	5.0 U
	1,1-Dichloroethane	1,000	20,000	1.0 U	1.0 U	1.0 U	1.0 U	1.0 U	1.0 U	1.0 U	1.0 U	1.0 U	1.0 U	1.0 U	1.0 U	1.0 U	1.0 U	1.0 U	1.0 U	1.0 U
	Chloroform	50	20,000	2.0 U	1.0 U	1.0 U	2.0 U	2.0 U	1.0 U	1.0 U	2.0 U	1.0 U	2.0 U	1.0 U	1.0 U	1.0 U	1.0 U	1.0 U	1.0 U	1.0 U
	Carbon Tetrachloride	2	5,000	1.0 U	1.0 U	1.0 U	1.0 U	1.0 U	1.0 U	1.0 U	1.0 U	1.0 U	1.0 U	1.0 U	1.0 U	1.0 U	1.0 U	1.0 U	1.0 U	1.0 U
	1,2-Dichloropropane	3	50,000	1.0 U	1.0 U	1.0 U	1.0 U	1.0 U	1.0 U	1.0 U	1.0 U	1.0 U	1.0 U	1.0 U	1.0 U	1.0 U	1.0 U	1.0 U	1.0 U	1.0 U
	Chlorodibromomethane	20	50,000	10 U	1.0 U	1.0 U	10 U	10 U	1.0 U	1.0 U	10 U	1.0 U	10 U	1.0 U	1.0 U	1.0 U	1.0 U	1.0 U	1.0 U	1.0 U
	1,1,2-Trichloroethane	900	50,000	1.0 U	1.0 U	1.0 U	1.0 U	1.0 U	1.0 U	1.0 U	1.0 U	1.0 U	1.0 U	1.0 U	1.0 U	1.0 U	1.0 U	1.0 U	1.0 U	1.0 U
	Tetrachloroethylene	50	30,000	1.0 U	1.0 U	1.0 U	1.0 U	1.0 U	1.0 U	1.0 U	1.0 U	1.0 U	**63**	**60**	**64**	**64**	1.0 U	1.0 U	1.0 U	1.0 U
	Chlorobenzene	200	1,000	1.0 U	1.0 U	1.0 U	1.0 U	1.0 U	1.0 U	1.0 U	1.0 U	1.0 U	1.0 U	1.0 U	1.0 U	1.0 U	1.0 U	1.0 U	1.0 U	1.0 U
	Trichlorofluoromethane (Freon 11)	NS	NS	2.0 U	2.0 U	2.0 U	2.0 U	2.0 U	2.0 U	2.0 U	2.0 U	2.0 U	2.0 U	2.0 U	2.0 U	2.0 U	2.0 U	2.0 U	2.0 U	2.0 U
	1,2-Dichloroethane	5	20,000	1.0 U	1.0 U	1.0 U	1.0 U	1.0 U	1.0 U	1.0 U	1.0 U	1.0 U	1.0 U	1.0 U	1.0 U	1.0 U	1.0 U	1.0 U	1.0 U	1.0 U
	1,1,1-Trichloroethane	4,000	20,000	1.0 U	1.0 U	1.0 U	1.0 U	1.0 U	1.0 U	1.0 U	1.0 U	1.0 U	1.0 U	1.0 U	1.0 U	1.0 U	1.0 U	1.0 U	1.0 U	1.0 U
	Bromodichloromethane	6	50,000	5.0 U	1.0 U	1.0 U	5.0 U	5.0 U	1.0 U	1.0 U	5.0 U	1.0 U	5.0 U	1.0 U	1.0 U	1.0 U	1.0 U	1.0 U	1.0 U	1.0 U
	trans-1,3-Dichloropropene	10[2]	200[2]	5.0 U	0.50 U	0.50 U	5.0 U	5.0 U	0.50 U	0.50 U	5.0 U	0.50 U	5.0 U	0.50 U	0.50 U	0.50 U	0.50 U	0.50 U	0.50 U	0.50 U
	cis-1,3-Dichloropropene	10[2]	200[2]	5.0 U	0.50 U	0.50 U	5.0 U	5.0 U	0.50 U	0.50 U	5.0 U	0.50 U	5.0 U	0.50 U	0.50 U	0.50 U	0.50 U	0.50 U	0.50 U	0.50 U
	1,1-Dichloropropene	NS	NS	2.0 U	2.0 U	2.0 U	2.0 U	2.0 U	2.0 U	2.0 U	2.0 U	2.0 U	2.0 U	2.0 U	2.0 U	2.0 U	2.0 U	2.0 U	2.0 U	2.0 U
	Bromoform	700	50,000	10 U	2.0 U	2.0 U	10 U	10 U	2.0 U	2.0 U	10 U	2.0 U	10 U	2.0 U	2.0 U	2.0 U	2.0 U	2.0 U	2.0 U	2.0 U
	1,1,2,2-Tetrachloroethane	9	50,000	0.50 U	1.0 U	1.0 U	0.50 U	0.50 U	1.0 U	1.0 U	0.50 U	1.0 U	0.50 U	1.0 U	1.0 U	1.0 U	1.0 U	1.0 U	1.0 U	1.0 U
	Benzene	2,000	10,000	1.0 U	1.0 U	1.0 U	1.0 U	1.0 U	1.0 U	1.0 U	1.0 U	1.0 U	1.0 U	1.0 U	1.0 U	1.0 U	1.0 U	1.0 U	1.0 U	1.0 U
	Toluene	50,000	40,000	1.0 U	1.0 U	1.0 U	1.0 U	1.0 U	1.0 U	1.0 U	1.0 U	1.0 U	1.0 U	1.0 U	1.0 U	1.0 U	1.0 U	1.0 U	1.0 U	1.0 U
	Ethylbenzene	20,000	5,000	1.0 U	1.0 U	1.0 U	1.0 U	1.0 U	1.0 U	1.0 U	1.0 U	1.0 U	1.0 U	1.0 U	1.0 U	1.0 U	1.0 U	1.0 U	1.0 U	1.0 U
	Chloromethane	NS	NS	2.0 U	2.0 U	2.0 U	2.0 U	2.0 U	2.0 U	2.0 U	2.0 U	2.0 U	2.0 U	2.0 U	2.0 U	2.0 U	2.0 U	2.0 U	2.0 U	2.0 U
	Bromomethane	7	800	2.0 U	5.0 U	5.0 U	2.0 U	2.0 U	5.0 U	5.0 U	2.0 U	5.0 U	2.0 U	5.0 U	5.0 U	5.0 U	5.0 U	5.0 U	5.0 U	5.0 U
	Vinyl Chloride	2	50,000	2.0 U	1.0 U	1.0 U	2.0 U	2.0 U	1.0 U	1.0 U	2.0 U	1.0 U	**3.4**	**9.2**	**9.9**	**1.6**	1.0 U	1.0 U	1.0 U	1.0 U
	Chloroethane	NS	NS	2.0 U	2.0 U	2.0 U	2.0 U	2.0 U	2.0 U	2.0 U	2.0 U	2.0 U	2.0 U	2.0 U	2.0 U	2.0 U	2.0 U	2.0 U	2.0 U	2.0 U
	1,1-Dichloroethylene	80	30,000	1.0 U	1.0 U	1.0 U	1.0 U	1.0 U	1.0 U	1.0 U	1.0 U	1.0 U	1.0 U	1.0 U	1.0 U	1.0 U	1.0 U	1.0 U	1.0 U	1.0 U
	trans-1,2-Dichloroethylene	90	50,000	1.0 U	1.0 U	1.0 U	1.0 U	1.0 U	1.0 U	1.0 U	1.0 U	1.0 U	1.0 U	1.0 U	1.0 U	1.0 U	1.0 U	1.0 U	1.0 U	1.0 U
	Trichloroethylene	30	5,000	1.0 U	1.0 U	1.0 U	1.0 U	1.0 U	1.0 U	1.0 U	1.0 U	1.0 U	**6.8**	**5.8**	**6.5**	**4.5**	1.0 U	1.0 U	1.0 U	1.0 U
	1,2-Dichlorobenzene	2,000	2,000	1.0 U	1.0 U	1.0 U	1.0 U	1.0 U	1.0 U	1.0 U	1.0 U	1.0 U	1.0 U	1.0 U	1.0 U	1.0 U	1.0 U	1.0 U	1.0 U	1.0 U
	1,3-Dichlorobenzene	2,000	50,000	1.0 U	1.0 U	1.0 U	1.0 U	1.0 U	1.0 U	1.0 U	1.0 U	1.0 U	1.0 U	1.0 U	1.0 U	1.0 U	1.0 U	1.0 U	1.0 U	1.0 U
	1,4-Dichlorobenzene	200	8,000	1.0 U	1.0 U	1.0 U	1.0 U	1.0 U	1.0 U	1.0 U	1.0 U	1.0 U	1.0 U	1.0 U	1.0 U	1.0 U	1.0 U	1.0 U	1.0 U	1.0 U
	Methyl tert-Butyl Ether (MTBE)	50,000	50,000	1.0 U	2.0 U	2.0 U	1.0 U	1.0 U	2.0 U	2.0 U	1.0 U	2.0 U	1.0 U	2.0 U	2.0 U	2.0 U	2.0 U	2.0 U	2.0 U	2.0 U
	m+p Xylene	9,000	5,000	2.0 U	2.0 U	2.0 U	2.0 U	2.0 U	2.0 U	2.0 U	2.0 U	2.0 U	2.0 U	2.0 U	2.0 U	2.0 U	2.0 U	2.0 U	2.0 U	2.0 U
	o-Xylene	9,000	5,000	1.0 U	1.0 U	1.0 U	1.0 U	1.0 U	1.0 U	1.0 U	1.0 U	1.0 U	1.0 U	1.0 U	1.0 U	1.0 U	1.0 U	1.0 U	1.0 U	1.0 U
	cis-1,2-Dichloroethylene	100	50,000	1.0 U	1.0 U	1.0 U	**3.7**	**4.1**	**5.9**	**3.2**	1.0 U	1.0 U	**20**	**30**	**30**	**9.6**	1.0 U	1.0 U	1.0 U	1.0 U
	Dibromomethane	NS	NS	1.0 U	2.0 U	2.0 U	1.0 U	1.0 U	2.0 U	2.0 U	1.0 U	2.0 U	1.0 U	2.0 U	2.0 U	2.0 U	2.0 U	2.0 U	2.0 U	2.0 U
	1,2,3-Trichloropropane	NS	NS	2.0 U	2.0 U	2.0 U	2.0 U	2.0 U	2.0 U	2.0 U	2.0 U	2.0 U	2.0 U	2.0 U	2.0 U	2.0 U	2.0 U	2.0 U	2.0 U	2.0 U
	Styrene	100	6,000	1.0 U	1.0 U	1.0 U	1.0 U	1.0 U	1.0 U	1.0 U	1.0 U	1.0 U	1.0 U	1.0 U	1.0 U	1.0 U	1.0 U	1.0 U	1.0 U	1.0 U
	Dichlorodifluoromethane (Freon 12)	NS	NS	2.0 U	2.0 U	2.0 U	2.0 U	2.0 U	2.0 U	2.0 U	2.0 U	2.0 U	2.0 U	2.0 U	2.0 U	2.0 U	2.0 U	2.0 U	2.0 U	2.0 U
	Acetone	50,000	50,000	50 U	5.0 U	5.0 U	50 U	50 U	5.0 U	5.0 U	50 U	5.0 U	50 U	5.0 U	5.0 U	5.0 U	5.0 U	5.0 U	5.0 U	5.0 U
	Carbon Disulfide	NS	NS	5.0 U	2.0 U	2.0 U	5.0 U	5.0 U	2.0 U	2.0 U	5.0 U	2.0 U	5.0 U	2.0 U	2.0 U	2.0 U	2.0 U	2.0 U	2.0 U	2.0 U
	2-Butanone (MEK)	50,000	50,000	20 U	5.0 U	5.0 U	20 U	20 U	5.0 U	5.0 U	20 U	5.0 U	20 U	5.0 U	5.0 U	5.0 U	5.0 U	5.0 U	5.0 U	5.0 U
	4-Methyl-2-pentanone (MIBK)	50,000	50,000	10 U	5.0 U	5.0 U	10 U	10 U	5.0 U	5.0 U	10 U	5.0 U	10 U	5.0 U	5.0 U	5.0 U	5.0 U	5.0 U	5.0 U	5.0 U
	2-Hexanone (MBK)	NS	NS	10 U	5.0 U	5.0 U	10 U	10 U	5.0 U	5.0 U	10 U	5.0 U	10 U	5.0 U	5.0 U	5.0 U	5.0 U	5.0 U	5.0 U	5.0 U
	Bromochloromethane	NS	NS	1.0 U	2.0 U	2.0 U	1.0 U	1.0 U	2.0 U	2.0 U	1.0 U	2.0 U	1.0 U	2.0 U	2.0 U	2.0 U	2.0 U	2.0 U	2.0 U	2.0 U
	Tetrahydrofuran	NS	NS	10 U	10 U	10 U	10 U	10 U	10 U	10 U	10 U	10 U	10 U	10 U	10 U	10 U	10 U	10 U	10 U	10 U
	2,2-Dichloropropane	NS	NS	1.0 U	2.0 U	2.0 U	1.0 U	1.0 U	2.0 U	2.0 U	1.0 U	2.0 U	1.0 U	2.0 U	2.0 U	2.0 U	2.0 U	2.0 U	2.0 U	2.0 U
	1,2-Dibromoethane (EDB)	2	50,000	0.50 U	2.0 U	2.0 U	0.50 U	0.50 U	2.0 U	2.0 U	0.50 U	2.0 U	0.50 U	2.0 U	2.0 U	2.0 U	2.0 U	2.0 U	2.0 U	2.0 U
	1,3-Dichloropropane	NS	NS	0.50 U	2.0 U	2.0 U	0.50 U	0.50 U	2.0 U	2.0 U	0.50 U	2.0 U	0.50 U	2.0 U	2.0 U	2.0 U	2.0 U	2.0 U	2.0 U	2.0 U
	1,1,1,2-Tetrachloroethane	10	50,000	5.0 U	1.0 U	1.0 U	5.0 U	5.0 U	1.0 U	1.0 U	5.0 U	1.0 U	5.0 U	1.0 U	1.0 U	1.0 U	1.0 U	1.0 U	1.0 U	1.0 U
	Bromobenzene	NS	NS	1.0 U	2.0 U	2.0 U	1.0 U	1.0 U	2.0 U	2.0 U	1.0 U	2.0 U	1.0 U	2.0 U	2.0 U	2.0 U	2.0 U	2.0 U	2.0 U	2.0 U
	n-Butylbenzene	7,000[1]	50,000[1]	1.0 U	2.0 U	2.0 U	1.0 U	1.0 U	2.0 U	2.0 U	1.0 U	2.0 U	1.0 U	2.0 U	2.0 U	2.0 U	2.0 U	2.0 U	2.0 U	2.0 U
	sec-Butylbenzene	7,000[1]	50,000[1]	1.0 U	2.0 U	2.0 U	1.0 U	1.0 U	2.0 U	2.0 U	1.0 U	2.0 U	1.0 U	2.0 U	2.0 U	2.0 U	2.0 U	2.0 U	2.0 U	2.0 U
	tert-Butylbenzene	7,000[1]	50,000[1]	1.0 U	2.0 U	2.0 U	1.0 U	1.0 U	2.0 U	2.0 U	1.0 U	2.0 U	1.0 U	2.0 U	2.0 U	2.0 U	2.0 U	2.0 U	2.0 U	2.0 U
	2-Chlorotoluene	NS	NS	1.0 U	2.0 U	2.0 U	1.0 U	1.0 U	2.0 U	2.0 U	1.0 U	2.0 U	1.0 U	2.0 U	2.0 U	2.0 U	2.0 U	2.0 U	2.0 U	2.0 U
	4-Chlorotoluene	NS	NS	1.0 U	2.0 U	2.0 U	1.0 U	1.0 U	2.0 U	2.0 U	1.0 U	2.0 U	1.0 U	2.0 U	2.0 U	2.0 U	2.0 U	2.0 U	2.0 U	2.0 U
	1,2-Dibromo-3-chloropropane (DBCP	NS	NS	10 U	5.0 U	5.0 U	10 U	10 U	5.0 U	5.0 U	10 U	5.0 U	10 U	5.0 U	5.0 U	5.0 U	5.0 U	5.0 U	5.0 U	5.0 U
	Hexachlorobutadiene	1	3,000	1.0 U	0.60 U	0.60 U	1.0 U	1.0 U	0.60 U	0.60 U	1.0 U	0.60 U	1.0 U	0.60 U	0.60 U	0.60 U	0.60 U	0.60 U	0.60 U	0.60 U

Table 2
Summary of Analytical Results for Groundwater Samples -- 2010
New Bedford High School
New Bedford, Massachusetts

Analysis	Analyte		Sample ID:	MW-4			MW-5				MW-6		MW-7				MW-8A	MW-11		MW-12
			Sample Date:	1/6/2010	2/17/2010	4/9/2010	1/6/2010	1/6/2010 Field Dup	2/17/2010	4/8/2010	1/7/2010	2/18/2010	1/7/2010	2/17/2010	2/17/2010 Field Dup	4/7/2010	2/18/2010	2/19/2010	4/7/2010	2/18/2010
		GW-2	GW-3																	
	Isopropylbenzene (Cumene)	7,000(1)	50,000(1)	1.0 U	2.0 U	2.0 U	1.0 U	1.0 U	2.0 U	2.0 U	1.0 U	2.0 U	1.0 U	2.0 U	2.0 U	2.0 U	2.0 U	2.0 U	2.0 U	2.0 U
	p-Isopropyltoluene (p-Cymene)	7,000(1)	50,000(1)	1.0 U	2.0 U	2.0 U	1.0 U	1.0 U	2.0 U	2.0 U	1.0 U	2.0 U	1.0 U	2.0 U	2.0 U	2.0 U	2.0 U	2.0 U	2.0 U	2.0 U
	Naphthalene	1,000	20,000	2.0 U	5.0 U	5.0 U	2.0 U	2.0 U	5.0 U	5.0 U	2.0 U	5.0 U	2.0 U	5.0 U	5.0 U	5.0 U	5.0 U	5.0 U	5.0 U	5.0 U
	n-Propylbenzene	7,000(1)	50,000(1)	1.0 U	2.0 U	2.0 U	1.0 U	1.0 U	2.0 U	2.0 U	1.0 U	2.0 U	1.0 U	2.0 U	2.0 U	2.0 U	2.0 U	2.0 U	2.0 U	2.0 U
	1,2,3-Trichlorobenzene	NS	NS	5.0 U	2.0 U	2.0 U	5.0 U	5.0 U	2.0 U	2.0 U	5.0 U	2.0 U	5.0 U	2.0 U	2.0 U	2.0 U	2.0 U	2.0 U	2.0 U	2.0 U
	1,2,4-Trichlorobenzene	2,000	50,000	1.0 U	2.0 U	2.0 U	1.0 U	1.0 U	2.0 U	2.0 U	1.0 U	2.0 U	1.0 U	2.0 U	2.0 U	2.0 U	2.0 U	2.0 U	2.0 U	2.0 U
	1,3,5-Trimethylbenzene	7,000(1)	50,000(1)	1.0 U	2.0 U	2.0 U	1.0 U	1.0 U	2.0 U	2.0 U	1.0 U	2.0 U	1.0 U	2.0 U	2.0 U	2.0 U	2.0 U	2.0 U	2.0 U	2.0 U
	1,2,4-Trimethylbenzene	7,000(1)	50,000(1)	1.0 U	2.0 U	2.0 U	1.0 U	1.0 U	2.0 U	2.0 U	1.0 U	2.0 U	1.0 U	2.0 U	2.0 U	2.0 U	2.0 U	2.0 U	2.0 U	2.0 U
	Diethyl Ether	NS	NS	2.0 U	2.0 U	2.0 U	2.0 U	2.0 U	2.0 U	2.0 U	2.0 U	2.0 U	2.0 U	2.0 U	2.0 U	2.0 U	2.0 U	2.0 U	2.0 U	2.0 U
	Diisopropyl Ether (DIPE)	NS	NS	0.50 U	2.0 U	2.0 U	0.50 U	0.50 U	2.0 U	2.0 U	0.50 U	2.0 U	0.50 U	2.0 U	2.0 U	2.0 U	2.0 U	2.0 U	2.0 U	2.0 U
	tert-Butyl Ethyl Ether (TBEE)	NS	NS	0.50 U	2.0 U	2.0 U	0.50 U	0.50 U	2.0 U	2.0 U	0.50 U	2.0 U	0.50 U	2.0 U	2.0 U	2.0 U	2.0 U	2.0 U	2.0 U	2.0 U
	tert-Amyl Methyl Ether (TAME)	NS	NS	0.50 U	2.0 U	2.0 U	0.50 U	0.50 U	2.0 U	2.0 U	0.50 U	2.0 U	0.50 U	2.0 U	2.0 U	2.0 U	2.0 U	2.0 U	2.0 U	2.0 U
	1,4-Dioxane	6,000	50,000	50 U	250 U	250 U	50 U	50 U	250 U	250 U	50 U	250 U	50 U	250 U	250 U	250 U	250 U	250 U	250 U	250 U

Notes:

ug/L - micrograms per liter.

NS - No MassDEP standards exist for this compound.

U - Compound was not detected at specified quantitation limit.

Values in **Bold** indicate the compound was detected.

Values shown in Bold and shaded type exceed one or more of the listed MassDEP Method 1 standards.

VOCs - Volatile Organic Compounds.

(1) - MassDEP Method 1 standards for C9-C10 aromatic hydrocarbons used.

(2) - MassDEP Method 1 standards for 1,3-Dichloropropene used.

Table 2
Summary of Analytical Results for Groundwater Samples -- 2010
New Bedford High School
New Bedford, Massachusetts

Analysis	Analyte		Sample ID:	MW-13	MW-14	MW-15	MW-16	MW-17	MW-18		MW-19	MW-20	MW-21	MW-22		MW-23	MW-24	MW-HH-13	MW-HRC-33
			Sample Date:	2/19/2010	2/19/2010	2/18/2010	2/19/2010	2/18/2010	2/18/2010	4/9/2010	2/18/2010	4/8/2010	4/8/2010	4/8/2010	4/8/2010 Field Dup	4/8/2010	4/8/2010	2/18/2010	2/17/2010
		GW-2	GW-3																
VOCs (ug/L)	Methylene Chloride	10,000	50,000	5.0 U	5.0 U	5.0 U	5.0 U	5.0 U	5.0 U	5.0 U	5.0 U	5.0 U	5.0 U	5.0 U	5.0 U	5.0 U	5.0 U	5.0 U	5.0 U
	1,1-Dichloroethane	1,000	20,000	1.0 U	1.0 U	1.0 U	1.0 U	1.0 U	1.0 U	1.0 U	1.0 U	1.0 U	1.0 U	1.0 U	1.0 U	1.0 U	1.0 U	1.0 U	1.0 U
	Chloroform	50	20,000	1.0 U	1.0 U	1.0 U	1.0 U	1.0 U	1.0 U	1.0 U	1.0 U	1.0 U	1.0 U	1.0 U	1.0 U	1.0 U	1.0 U	1.0 U	1.0 U
	Carbon Tetrachloride	2	5,000	1.0 U	1.0 U	1.0 U	1.0 U	1.0 U	1.0 U	1.0 U	1.0 U	1.0 U	1.0 U	1.0 U	1.0 U	1.0 U	1.0 U	1.0 U	1.0 U
	1,2-Dichloropropane	3	50,000	1.0 U	1.0 U	1.0 U	1.0 U	1.0 U	1.0 U	1.0 U	1.0 U	1.0 U	1.0 U	1.0 U	1.0 U	1.0 U	1.0 U	1.0 U	1.0 U
	Chlorodibromomethane	20	50,000	1.0 U	1.0 U	1.0 U	1.0 U	1.0 U	1.0 U	1.0 U	1.0 U	1.0 U	1.0 U	1.0 U	1.0 U	1.0 U	1.0 U	1.0 U	1.0 U
	1,1,2-Trichloroethane	900	50,000	1.0 U	1.0 U	1.0 U	1.0 U	1.0 U	1.0 U	1.0 U	1.0 U	1.0 U	1.0 U	1.0 U	1.0 U	1.0 U	1.0 U	1.0 U	1.0 U
	Tetrachloroethylene	50	30,000	1.0 U	1.0 U	1.0 U	1.0 U	1.0 U	1.0 U	1.0 U	1.0 U	1.0 U	1.0 U	1.0 U	1.0 U	1.0 U	1.0 U	1.0 U	1.0 U
	Chlorobenzene	200	1,000	1.0 U	1.0 U	1.0 U	1.0 U	1.0 U	1.0 U	1.0 U	1.0 U	1.0 U	1.0 U	1.0 U	1.0 U	1.0 U	1.0 U	1.0 U	1.0 U
	Trichlorofluoromethane (Freon 11)	NS	NS	2.0 U	2.0 U	2.0 U	2.0 U	2.0 U	2.0 U	2.0 U	2.0 U	2.0 U	2.0 U	2.0 U	2.0 U	2.0 U	2.0 U	2.0 U	2.0 U
	1,2-Dichloroethane	5	20,000	1.0 U	1.0 U	1.0 U	1.0 U	1.0 U	1.0 U	1.0 U	1.0 U	1.0 U	1.0 U	1.0 U	1.0 U	1.0 U	1.0 U	1.0 U	1.0 U
	1,1,1-Trichloroethane	4,000	20,000	1.0 U	1.0 U	1.0 U	1.0 U	1.0 U	1.0 U	1.0 U	1.0 U	1.0 U	1.0 U	1.0 U	1.0 U	1.0 U	1.0 U	1.0 U	1.0 U
	Bromodichloromethane	6	50,000	1.0 U	1.0 U	1.0 U	1.0 U	1.0 U	1.0 U	1.0 U	1.0 U	1.0 U	1.0 U	1.0 U	1.0 U	1.0 U	1.0 U	1.0 U	1.0 U
	trans-1,3-Dichloropropene	10[2]	200[2]	0.50 U	0.50 U	0.50 U	0.50 U	0.50 U	0.50 U	0.50 U	0.50 U	0.50 U	0.50 U	0.50 U	0.50 U	0.50 U	0.50 U	0.50 U	0.50 U
	cis-1,3-Dichloropropene	10[2]	200[2]	0.50 U	0.50 U	0.50 U	0.50 U	0.50 U	0.50 U	0.50 U	0.50 U	0.50 U	0.50 U	0.50 U	0.50 U	0.50 U	0.50 U	0.50 U	0.50 U
	1,1-Dichloropropene	NS	NS	2.0 U	2.0 U	2.0 U	2.0 U	2.0 U	2.0 U	2.0 U	2.0 U	2.0 U	2.0 U	2.0 U	2.0 U	2.0 U	2.0 U	2.0 U	2.0 U
	Bromoform	700	50,000	2.0 U	2.0 U	2.0 U	2.0 U	2.0 U	2.0 U	2.0 U	2.0 U	2.0 U	2.0 U	2.0 U	2.0 U	2.0 U	2.0 U	2.0 U	2.0 U
	1,1,2,2-Tetrachloroethane	9	50,000	1.0 U	1.0 U	1.0 U	1.0 U	1.0 U	1.0 U	1.0 U	1.0 U	1.0 U	1.0 U	1.0 U	1.0 U	1.0 U	1.0 U	1.0 U	1.0 U
	Benzene	2,000	10,000	1.0 U	1.0 U	1.0 U	1.0 U	1.0 U	1.0 U	1.0 U	1.0 U	1.0 U	1.0 U	1.0 U	1.0 U	1.0 U	1.0 U	1.0 U	1.0 U
	Toluene	50,000	40,000	1.0 U	1.0 U	1.0 U	1.0 U	1.0 U	1.0 U	1.0 U	1.0 U	1.0 U	1.0 U	1.0 U	1.0 U	1.0 U	1.0 U	1.0 U	1.0 U
	Ethylbenzene	20,000	5,000	1.0 U	1.0 U	1.0 U	1.0 U	1.0 U	1.0 U	1.0 U	1.0 U	1.0 U	1.0 U	1.0 U	1.0 U	1.0 U	1.0 U	1.0 U	1.0 U
	Chloromethane	NS	NS	2.0 U	2.0 U	2.0 U	2.0 U	2.0 U	2.0 U	2.0 U	2.0 U	2.0 U	2.0 U	2.0 U	2.0 U	2.0 U	2.0 U	2.0 U	2.0 U
	Bromomethane	7	800	5.0 U	5.0 U	5.0 U	5.0 U	5.0 U	5.0 U	5.0 U	5.0 U	5.0 U	5.0 U	5.0 U	5.0 U	5.0 U	5.0 U	5.0 U	5.0 U
	Vinyl Chloride	2	50,000	1.0 U	1.0 U	1.0 U	1.0 U	1.0 U	1.0 U	1.0 U	1.0 U	1.0 U	1.0 U	1.0 U	1.0 U	1.0 U	**4.8**	1.0 U	1.0 U
	Chloroethane	NS	NS	2.0 U	2.0 U	2.0 U	2.0 U	2.0 U	2.0 U	2.0 U	2.0 U	2.0 U	2.0 U	2.0 U	2.0 U	2.0 U	2.0 U	2.0 U	2.0 U
	1,1-Dichloroethylene	80	30,000	1.0 U	1.0 U	1.0 U	1.0 U	1.0 U	1.0 U	1.0 U	1.0 U	1.0 U	1.0 U	1.0 U	1.0 U	1.0 U	1.0 U	1.0 U	1.0 U
	trans-1,2-Dichloroethylene	90	50,000	1.0 U	1.0 U	1.0 U	1.0 U	1.0 U	1.0 U	1.0 U	1.0 U	1.0 U	1.0 U	1.0 U	1.0 U	1.0 U	1.0 U	1.0 U	1.0 U
	Trichloroethylene	30	5,000	1.0 U	1.0 U	1.0 U	1.0 U	1.0 U	1.0 U	1.0 U	1.0 U	**1.5**	1.0 U	1.0 U	1.0 U	1.0 U	1.0 U	1.0 U	1.0 U
	1,2-Dichlorobenzene	2,000	2,000	1.0 U	1.0 U	1.0 U	1.0 U	1.0 U	1.0 U	1.0 U	1.0 U	1.0 U	1.0 U	1.0 U	1.0 U	1.0 U	1.0 U	1.0 U	1.0 U
	1,3-Dichlorobenzene	2,000	50,000	1.0 U	1.0 U	1.0 U	1.0 U	1.0 U	1.0 U	1.0 U	1.0 U	1.0 U	1.0 U	1.0 U	1.0 U	1.0 U	1.0 U	1.0 U	1.0 U
	1,4-Dichlorobenzene	200	8,000	1.0 U	1.0 U	1.0 U	1.0 U	1.0 U	1.0 U	1.0 U	1.0 U	1.0 U	1.0 U	1.0 U	1.0 U	1.0 U	1.0 U	1.0 U	1.0 U
	Methyl tert-Butyl Ether (MTBE)	50,000	50,000	2.0 U	2.0 U	2.0 U	2.0 U	2.0 U	2.0 U	2.0 U	2.0 U	2.0 U	2.0 U	2.0 U	2.0 U	2.0 U	2.0 U	2.0 U	2.0 U
	m+p Xylene	9,000	5,000	2.0 U	2.0 U	2.0 U	2.0 U	2.0 U	2.0 U	2.0 U	2.0 U	2.0 U	2.0 U	2.0 U	2.0 U	2.0 U	2.0 U	2.0 U	2.0 U
	o-Xylene	9,000	5,000	1.0 U	1.0 U	1.0 U	1.0 U	1.0 U	1.0 U	1.0 U	1.0 U	1.0 U	1.0 U	1.0 U	1.0 U	1.0 U	1.0 U	1.0 U	1.0 U
	cis-1,2-Dichloroethylene	100	50,000	1.0 U	1.0 U	1.0 U	1.0 U	1.0 U	1.0 U	1.0 U	1.0 U	**1.5**	1.0 U	1.0 U	1.0 U	1.0 U	**1.8**	1.0 U	1.0 U
	Dibromomethane	NS	NS	2.0 U	2.0 U	2.0 U	2.0 U	2.0 U	2.0 U	2.0 U	2.0 U	2.0 U	2.0 U	2.0 U	2.0 U	2.0 U	2.0 U	2.0 U	2.0 U
	1,2,3-Trichloropropane	NS	NS	2.0 U	2.0 U	2.0 U	2.0 U	2.0 U	2.0 U	2.0 U	2.0 U	2.0 U	2.0 U	2.0 U	2.0 U	2.0 U	2.0 U	2.0 U	2.0 U
	Styrene	100	6,000	1.0 U	1.0 U	1.0 U	1.0 U	1.0 U	1.0 U	1.0 U	1.0 U	1.0 U	1.0 U	1.0 U	1.0 U	1.0 U	1.0 U	1.0 U	1.0 U
	Dichlorodifluoromethane (Freon 12)	NS	NS	2.0 U	2.0 U	2.0 U	2.0 U	2.0 U	2.0 U	2.0 U	2.0 U	2.0 U	2.0 U	2.0 U	2.0 U	2.0 U	2.0 U	2.0 U	2.0 U
	Acetone	50,000	50,000	5.0 U	5.0 U	5.0 U	5.0 U	5.0 U	5.0 U	5.0 U	5.0 U	5.0 U	5.0 U	5.0 U	5.0 U	5.0 U	5.0 U	5.0 U	5.0 U
	Carbon Disulfide	NS	NS	2.0 U	2.0 U	2.0 U	2.0 U	2.0 U	2.0 U	2.0 U	2.0 U	2.0 U	2.0 U	2.0 U	2.0 U	2.0 U	2.0 U	2.0 U	2.0 U
	2-Butanone (MEK)	50,000	50,000	5.0 U	5.0 U	5.0 U	5.0 U	5.0 U	5.0 U	5.0 U	5.0 U	5.0 U	5.0 U	5.0 U	5.0 U	5.0 U	5.0 U	5.0 U	5.0 U
	4-Methyl-2-pentanone (MIBK)	50,000	50,000	5.0 U	5.0 U	5.0 U	5.0 U	5.0 U	5.0 U	5.0 U	5.0 U	5.0 U	5.0 U	5.0 U	5.0 U	5.0 U	5.0 U	5.0 U	5.0 U
	2-Hexanone (MBK)	NS	NS	5.0 U	5.0 U	5.0 U	5.0 U	5.0 U	5.0 U	5.0 U	5.0 U	5.0 U	5.0 U	5.0 U	5.0 U	5.0 U	5.0 U	5.0 U	5.0 U
	Bromochloromethane	NS	NS	2.0 U	2.0 U	2.0 U	2.0 U	2.0 U	2.0 U	2.0 U	2.0 U	2.0 U	2.0 U	2.0 U	2.0 U	2.0 U	2.0 U	2.0 U	2.0 U
	Tetrahydrofuran	NS	NS	10 U	10 U	10 U	10 U	10 U	10 U	10 U	10 U	10 U	10 U	10 U	10 U	10 U	10 U	10 U	10 U
	2,2-Dichloropropane	NS	NS	2.0 U	2.0 U	2.0 U	2.0 U	2.0 U	2.0 U	2.0 U	2.0 U	2.0 U	2.0 U	2.0 U	2.0 U	2.0 U	2.0 U	2.0 U	2.0 U
	1,2-Dibromoethane (EDB)	2	50,000	2.0 U	2.0 U	2.0 U	2.0 U	2.0 U	2.0 U	2.0 U	2.0 U	2.0 U	2.0 U	2.0 U	2.0 U	2.0 U	2.0 U	2.0 U	2.0 U
	1,3-Dichloropropane	NS	NS	2.0 U	2.0 U	2.0 U	2.0 U	2.0 U	2.0 U	2.0 U	2.0 U	2.0 U	2.0 U	2.0 U	2.0 U	2.0 U	2.0 U	2.0 U	2.0 U
	1,1,1,2-Tetrachloroethane	10	50,000	1.0 U	1.0 U	1.0 U	1.0 U	1.0 U	1.0 U	1.0 U	1.0 U	1.0 U	1.0 U	1.0 U	1.0 U	1.0 U	1.0 U	1.0 U	1.0 U
	Bromobenzene	NS	NS	2.0 U	2.0 U	2.0 U	2.0 U	2.0 U	2.0 U	2.0 U	2.0 U	2.0 U	2.0 U	2.0 U	2.0 U	2.0 U	2.0 U	2.0 U	2.0 U
	n-Butylbenzene	7,000[1]	50,000[1]	2.0 U	2.0 U	2.0 U	2.0 U	2.0 U	2.0 U	2.0 U	2.0 U	2.0 U	2.0 U	2.0 U	2.0 U	2.0 U	2.0 U	2.0 U	2.0 U
	sec-Butylbenzene	7,000[1]	50,000[1]	2.0 U	2.0 U	2.0 U	2.0 U	2.0 U	2.0 U	2.0 U	2.0 U	2.0 U	2.0 U	2.0 U	2.0 U	2.0 U	2.0 U	2.0 U	2.0 U
	tert-Butylbenzene	7,000[1]	50,000[1]	2.0 U	2.0 U	2.0 U	2.0 U	2.0 U	2.0 U	2.0 U	2.0 U	2.0 U	2.0 U	2.0 U	2.0 U	2.0 U	2.0 U	2.0 U	2.0 U
	2-Chlorotoluene	NS	NS	2.0 U	2.0 U	2.0 U	2.0 U	2.0 U	2.0 U	2.0 U	2.0 U	2.0 U	2.0 U	2.0 U	2.0 U	2.0 U	2.0 U	2.0 U	2.0 U
	4-Chlorotoluene	NS	NS	2.0 U	2.0 U	2.0 U	2.0 U	2.0 U	2.0 U	2.0 U	2.0 U	2.0 U	2.0 U	2.0 U	2.0 U	2.0 U	2.0 U	2.0 U	2.0 U
	1,2-Dibromo-3-chloropropane (DBCP	NS	NS	5.0 U	5.0 U	5.0 U	5.0 U	5.0 U	5.0 U	5.0 U	5.0 U	5.0 U	5.0 U	5.0 U	5.0 U	5.0 U	5.0 U	5.0 U	5.0 U
	Hexachlorobutadiene	1	3,000	0.60 U	0.60 U	0.60 U	0.60 U	0.60 U	0.60 U	0.60 U	0.60 U	0.60 U	0.60 U	0.60 U	0.60 U	0.60 U	0.60 U	0.60 U	0.60 U

Table 2
Summary of Analytical Results for Groundwater Samples -- 2010
New Bedford High School
New Bedford, Massachusetts

Analysis	Analyte		Sample ID:	MW-13	MW-14	MW-15	MW-16	MW-17	MW-18		MW-19	MW-20	MW-21	MW-22		MW-23	MW-24	MW-HH-13	MW-HRC-33
			Sample Date:	2/19/2010	2/19/2010	2/18/2010	2/19/2010	2/18/2010	2/18/2010	4/9/2010	2/18/2010	4/8/2010	4/8/2010	4/8/2010	4/8/2010 Field Dup	4/8/2010	4/8/2010	2/18/2010	2/17/2010
		GW-2	GW-3																
	Isopropylbenzene (Cumene)	7,000(1)	50,000(1)	2.0 U	2.0 U	2.0 U	2.0 U	2.0 U	2.0 U	2.0 U	2.0 U	2.0 U	2.0 U	2.0 U	2.0 U	2.0 U	2.0 U	2.0 U	2.0 U
	p-Isopropyltoluene (p-Cymene)	7,000(1)	50,000(1)	2.0 U	2.0 U	2.0 U	2.0 U	2.0 U	2.0 U	2.0 U	2.0 U	2.0 U	2.0 U	**6.2**	**6.2**	2.0 U	2.0 U	2.0 U	2.0 U
	Naphthalene	1,000	20,000	5.0 U	5.0 U	5.0 U	5.0 U	5.0 U	5.0 U	5.0 U	5.0 U	5.0 U	5.0 U	5.0 U	5.0 U	5.0 U	5.0 U	5.0 U	5.0 U
	n-Propylbenzene	7,000(1)	50,000(1)	2.0 U	2.0 U	2.0 U	2.0 U	2.0 U	2.0 U	2.0 U	2.0 U	2.0 U	2.0 U	2.0 U	2.0 U	2.0 U	2.0 U	2.0 U	2.0 U
	1,2,3-Trichlorobenzene	NS	NS	2.0 U	2.0 U	2.0 U	2.0 U	2.0 U	2.0 U	2.0 U	2.0 U	2.0 U	2.0 U	2.0 U	2.0 U	2.0 U	2.0 U	2.0 U	2.0 U
	1,2,4-Trichlorobenzene	2,000	50,000	2.0 U	2.0 U	2.0 U	2.0 U	2.0 U	2.0 U	2.0 U	2.0 U	2.0 U	2.0 U	2.0 U	2.0 U	2.0 U	2.0 U	2.0 U	2.0 U
	1,3,5-Trimethylbenzene	7,000(1)	50,000(1)	2.0 U	2.0 U	2.0 U	2.0 U	2.0 U	2.0 U	2.0 U	2.0 U	2.0 U	2.0 U	2.0 U	2.0 U	2.0 U	2.0 U	2.0 U	2.0 U
	1,2,4-Trimethylbenzene	7,000(1)	50,000(1)	2.0 U	2.0 U	2.0 U	2.0 U	2.0 U	2.0 U	2.0 U	2.0 U	2.0 U	2.0 U	2.0 U	2.0 U	2.0 U	2.0 U	2.0 U	2.0 U
	Diethyl Ether	NS	NS	2.0 U	2.0 U	2.0 U	2.0 U	2.0 U	2.0 U	2.0 U	2.0 U	2.0 U	2.0 U	2.0 U	2.0 U	2.0 U	2.0 U	2.0 U	2.0 U
	Diisopropyl Ether (DIPE)	NS	NS	2.0 U	2.0 U	2.0 U	2.0 U	2.0 U	2.0 U	2.0 U	2.0 U	2.0 U	2.0 U	2.0 U	2.0 U	2.0 U	2.0 U	2.0 U	2.0 U
	tert-Butyl Ethyl Ether (TBEE)	NS	NS	2.0 U	2.0 U	2.0 U	2.0 U	2.0 U	2.0 U	2.0 U	2.0 U	2.0 U	2.0 U	2.0 U	2.0 U	2.0 U	2.0 U	2.0 U	2.0 U
	tert-Amyl Methyl Ether (TAME)	NS	NS	2.0 U	2.0 U	2.0 U	2.0 U	2.0 U	2.0 U	2.0 U	2.0 U	2.0 U	2.0 U	2.0 U	2.0 U	2.0 U	2.0 U	2.0 U	2.0 U
	1,4-Dioxane	6,000	50,000	250 U	250 U	250 U	250 U	250 U	250 U	250 U	250 U	250 U	250 U	250 U	250 U	250 U	250 U	250 U	250 U

Notes:

ug/L - micrograms per liter.

NS - No MassDEP standards exist for this compound.

U - Compound was not detected at specified quantitation limit.

Values in **Bold** indicate the compound was detected.

Values shown in Bold and shaded type exceed one or more of the listed MassDEP Method 1 standards.

VOCs - Volatile Organic Compounds.

(1) - MassDEP Method 1 standards for C9-C10 aromatic hydrocarbons used.

(2) - MassDEP Method 1 standards for 1,3-Dichloropropene used.

Table 3
Summary of Analytical Results for Indoor Air Samples -- 2010
New Bedford High School
New Bedford, Massachusetts

Analysis	Analyte	Risk Management Criteria HI = 0.2	HI = 1.0	ELCR = 1 x 10^{-6}	ELCR = 1 x 10^{-5}	TRC-IA-1 1/31/2010 Mechanical Room B-114	TRC-IA-1 4/20/2010 Mechanical Room B-114	TRC-IA-2 1/31/2010 Classroom B-116	TRC-IA-3 1/31/2010 Honors Dining Room B-109	TRC-IA-4 1/31/2010 Cafeteria Storage Room	TRC-IA-5 1/31/2010 Classroom A-3-112	TRC-IA-5 4/20/2010 Classroom A-3-112	TRC-IA-6 4/20/2010 Classroom A-4-115	TRC-IA-7 4/20/2010 Classroom A-4-105	TRC-IA-8 4/20/2010 Classroom A-3-115	TRC-IA-9 4/20/2010 Classroom A-3-105	TRC-IA-10 4/20/2010 Classroom A-2115	TRC-IA-11 4/20/2010 Classroom A-2-105	TRC-IA-12 4/20/2010 Classroom A-1-116	TRC-IA-13 4/20/2010 Classroom A-2-112	TRC-IA-14 4/20/2010 Classroom A-1-110	TRC-IA-15 4/20/2010 Lecture Room D-120
TO-15 (ug/m3)	Dichlorodifluoromethane	NS	NS	NS	NS	**2.00**	**2.27**	**2.02**	**2.08**	**2.13**	**3.36**	**2.55**	**3.09**	**2.16**	**2.31**	**1.95**	**2.21**	**2.20**	**2.85**	**2.56**	**2.23**	**2.28**
	Chloromethane	NS	NS	NS	NS	**1.11**	**1.04**	**1.03**	**0.92**	**1.16**	**1.29**	**1.29**	**1.54**	**1.11**	**1.09**	**1.08**	**1.19**	**1.07**	**1.33**	**1.42**	**1.01**	**1.12**
	Vinyl chloride	20	100	0.27	2.7	**0.57**	**0.853**	0.051 U	0.051 U	0.051 U	**0.531**	0.051 U	0.051 U	0.051 U	0.051 U	0.051 U	0.051 U	0.051 U	0.051 U	0.051 U	0.051 U	0.051 U
	Bromomethane	1	5	NS	NS	0.776 U	0.776 U	0.776 U	0.776 U	0.776 U	0.776 U	0.776 U	0.776 U	0.776 U	0.776 U	0.776 U	0.776 U	0.776 U	0.776 U	0.776 U	0.776 U	0.776 U
	Chloroethane	NS	NS	NS	NS	0.527 U	0.527 U	0.527 U	0.527 U	0.527 U	0.527 U	0.527 U	0.527 U	0.527 U	0.527 U	0.527 U	0.527 U	0.527 U	0.527 U	0.527 U	0.527 U	0.527 U
	Acetone	160	800	NS	NS	**3.40**	**2.58**	**3.57**	**29.6**	**3.68**	2.37 U	**4.83**	**6.81**	**5.18**	**7.56**	**5.78**	**4.64**	**7.75**	**5.30**	**5.02**	**4.62**	**8.21**
	Trichlorofluoromethane	NS	NS	NS	NS	1.12 U	**1.25**	1.12 U	1.12 U	1.12 U	**4.92**	**1.37**	**1.57**	1.12 U	**1.25**	1.12 U	**1.20**	**1.18**	**1.48**	**1.36**	**1.21**	**1.58**
	Ethyl ether	NS	NS	NS	NS	0.606 U	0.606 U	0.606 U	0.606 U	0.606 U	0.606 U	0.606 U	0.606 U	0.606 U	0.606 U	0.606 U	0.606 U	0.606 U	0.606 U	0.606 U	0.606 U	0.606 U
	1,1-Dichloroethene	40	200	NS	NS	0.792 U	0.792 U	0.792 U	0.792 U	0.792 U	0.792 U	0.792 U	0.792 U	0.792 U	0.792 U	0.792 U	0.792 U	0.792 U	0.792 U	0.792 U	0.792 U	0.792 U
	Methylene chloride	600	3,000	5	50	1.74 U	1.74 U	1.74 U	1.74 U	1.74 U	1.74 U	1.74 U	1.74 U	1.74 U	1.74 U	**2.87**	1.74 U	1.74 U	1.74 U	1.74 U	1.74 U	1.74 U
	Carbon disulfide	NS	NS	NS	NS	0.622 U	0.622 U	0.622 U	0.622 U	0.622 U	0.622 U	0.622 U	0.622 U	0.622 U	0.622 U	0.622 U	0.622 U	0.622 U	0.622 U	0.622 U	0.622 U	0.622 U
	trans-1,2-Dichloroethene	14	70	NS	NS	**2.38**	**5.62**	0.079 U	0.079 U	0.079 U	**1.72**	0.079 U	0.079 U	0.079 U	0.079 U	0.079 U	0.079 U	0.079 U	0.079 U	0.079 U	0.079 U	0.079 U
	1,1-Dichloroethane	100	500	NS	NS	0.809 U	0.809 U	0.809 U	0.809 U	0.809 U	0.809 U	0.809 U	0.809 U	0.809 U	0.809 U	0.809 U	0.809 U	0.809 U	0.809 U	0.809 U	0.809 U	0.809 U
	Methyl tert butyl ether	600	3,000	NS	NS	0.720 U	0.720 U	0.720 U	0.720 U	0.720 U	0.720 U	0.720 U	0.720 U	0.720 U	0.720 U	0.720 U	0.720 U	0.720 U	0.720 U	0.720 U	0.720 U	**4.74**
	2-Butanone	1,000	5,000	NS	NS	**1.01**	**4.57**	0.589 U	0.589 U	0.589 U	**1.89**	0.589 U	0.589 U	0.589 U	**0.922**	0.589 U	0.589 U	**0.746**	**0.648**	0.589 U	0.589 U	**2.44**
	cis-1,2-Dichloroethene	7	35	NS	NS	**4.33**	**15.2**	**0.087**	0.079 U	0.079 U	**3.58**	0.079 U	**0.103**	**0.246**	0.079 U	**0.119**	0.079 U	0.079 U	0.079 U	0.079 U	0.079 U	0.079 U
	Chloroform	130	650	0.11	1.1	0.976 U	0.976 U	0.976 U	0.976 U	0.976 U	0.976 U	0.976 U	0.976 U	0.976 U	0.976 U	0.976 U	0.976 U	0.976 U	0.976 U	0.976 U	0.976 U	0.976 U
	Tetrahydrofuran	NS	NS	NS	NS	0.589 U	0.589 U	0.589 U	0.589 U	0.589 U	0.589 U	0.589 U	0.589 U	0.589 U	0.589 U	0.589 U	0.589 U	0.589 U	0.589 U	0.589 U	0.589 U	0.589 U
	2,2-Dichloropropane	NS	NS	NS	NS	0.923 U	0.923 U	0.923 U	0.923 U	0.923 U	0.923 U	0.923 U	0.923 U	0.923 U	0.923 U	0.923 U	0.923 U	0.923 U	0.923 U	0.923 U	0.923 U	0.923 U
	1,2-Dichloroethane	11	55	0.09	0.9	0.809 U	0.809 U	0.809 U	0.809 U	0.809 U	0.809 U	0.809 U	0.809 U	0.809 U	0.809 U	0.809 U	0.809 U	0.809 U	0.809 U	0.809 U	0.809 U	0.809 U
	Diisopropyl ether	NS	NS	NS	NS	0.835 U	0.835 U	0.835 U	0.835 U	0.835 U	0.835 U	0.835 U	0.835 U	0.835 U	0.835 U	0.835 U	0.835 U	0.835 U	0.835 U	0.835 U	0.835 U	0.835 U
	tert-Butyl Ethyl Ether	NS	NS	NS	NS	0.835 U	0.835 U	0.835 U	0.835 U	0.835 U	0.835 U	0.835 U	0.835 U	0.835 U	0.835 U	0.835 U	0.835 U	0.835 U	0.835 U	0.835 U	0.835 U	0.835 U
	1,1,1-Trichloroethane	1,100	5,500	NS	NS	1.09 U	1.09 U	1.09 U	1.09 U	1.09 U	1.09 U	1.09 U	1.09 U	1.09 U	1.09 U	1.09 U	1.09 U	1.09 U	1.09 U	1.09 U	1.09 U	**7.14**
	1,1-Dichloropropene	NS	NS	NS	NS	0.907 U	0.907 U	0.907 U	0.907 U	0.907 U	0.907 U	0.907 U	0.907 U	0.907 U	0.907 U	0.907 U	0.907 U	0.907 U	0.907 U	0.907 U	0.907 U	0.907 U
	Benzene	6	30	0.3	3	**0.983**	**5.50**	0.638 U	0.638 U	0.638 U	**2.55**	0.638 U	0.638 U	0.638 U	0.638 U	0.638 U	0.638 U	0.638 U	0.638 U	0.638 U	0.638 U	**4.48**
	Carbon tetrachloride	86	430	0.16	1.6	1.26 U	1.26 U	1.26 U	1.26 U	1.26 U	1.26 U	1.26 U	1.26 U	1.26 U	1.26 U	1.26 U	1.26 U	1.26 U	1.26 U	1.26 U	1.26 U	1.26 U
	tert-Amyl Methyl Ether	NS	NS	NS	NS	0.835 U	0.835 U	0.835 U	0.835 U	0.835 U	0.835 U	0.835 U	0.835 U	0.835 U	0.835 U	0.835 U	0.835 U	0.835 U	0.835 U	0.835 U	0.835 U	0.835 U
	Dibromomethane	NS	NS	NS	NS	1.42 U	1.42 U	1.42 U	1.42 U	1.42 U	1.42 U	1.42 U	1.42 U	1.42 U	1.42 U	1.42 U	1.42 U	1.42 U	1.42 U	1.42 U	1.42 U	1.42 U
	1,2-Dichloropropane	0.8	4	0.13	1.3	0.924 U	0.924 U	0.924 U	0.924 U	0.924 U	0.924 U	0.924 U	0.924 U	0.924 U	0.924 U	0.924 U	0.924 U	0.924 U	0.924 U	0.924 U	0.924 U	0.924 U
	Bromodichloromethane	14	70	0.14	1.4	1.34 U	1.34 U	1.34 U	1.34 U	1.34 U	1.34 U	1.34 U	1.34 U	1.34 U	1.34 U	1.34 U	1.34 U	1.34 U	1.34 U	1.34 U	1.34 U	1.34 U
	1,4-Dioxane	24	120	0.59	5.9	0.720 U	0.720 U	0.720 U	0.720 U	0.720 U	0.720 U	0.720 U	0.720 U	0.720 U	0.720 U	0.720 U	0.720 U	0.720 U	0.720 U	0.720 U	0.720 U	0.720 U
	Trichloroethene	36	180	1.4	14	**2.20**	**10.9**	0.107 U	0.107 U	0.107 U	**1.12**	0.107 U	**0.172**	**0.462**	0.107 U	0.107 U	0.107 U	0.107 U	0.107 U	0.107 U	0.107 U	**0.107**
	cis-1,3-Dichloropropene	4	20	0.6	6	0.907 U	0.907 U	0.907 U	0.907 U	0.907 U	0.907 U	0.907 U	0.907 U	0.907 U	0.907 U	0.907 U	0.907 U	0.907 U	0.907 U	0.907 U	0.907 U	0.907 U
	4-Methyl-2-pentanone	600	3,000	NS	NS	0.819 U	0.819 U	0.819 U	0.819 U	0.819 U	**1.21**	0.819 U	0.819 U	0.819 U	0.819 U	0.819 U	0.819 U	0.819 U	0.819 U	0.819 U	0.819 U	0.819 U
	trans-1,3-Dichloropropene	4	20	0.6	6	0.907 U	0.907 U	0.907 U	0.907 U	0.907 U	0.907 U	0.907 U	0.907 U	0.907 U	0.907 U	0.907 U	0.907 U	0.907 U	0.907 U	0.907 U	0.907 U	0.907 U
	1,1,2-Trichloroethane	15	75	0.15	1.5	1.09 U	1.09 U	1.09 U	1.09 U	1.09 U	1.09 U	1.09 U	1.09 U	1.09 U	1.09 U	1.09 U	1.09 U	1.09 U	1.09 U	1.09 U	1.09 U	1.09 U
	Toluene	1,000	5,000	NS	NS	**1.97**	**42.0**	0.753 U	**4.18**	0.753 U	**13.1**	0.753 U	**0.874**	**1.41**	0.753 U	**0.915**	0.753 U	**1.31**	0.753 U	0.753 U	0.753 U	**36.9**
	1,3-Dichloropropane	NS	NS	NS	NS	0.923 U	0.923 U	0.923 U	0.923 U	0.923 U	0.923 U	0.923 U	0.923 U	0.923 U	0.923 U	0.923 U	0.923 U	0.923 U	0.923 U	0.923 U	0.923 U	0.923 U
	2-Hexanone	NS	NS	NS	NS	0.819 U	0.819 U	0.819 U	0.819 U	0.819 U	0.819 U	0.819 U	0.819 U	0.819 U	0.819 U	0.819 U	0.819 U	0.819 U	0.819 U	0.819 U	0.819 U	0.819 U
	Dibromochloromethane	14	70	0.1	1	1.70 U	1.70 U	1.70 U	1.70 U	1.70 U	1.70 U	1.70 U	1.70 U	1.70 U	1.70 U	1.70 U	1.70 U	1.70 U	1.70 U	1.70 U	1.70 U	1.70 U
	1,2-Dibromoethane	1.8	9	0.011	0.11	1.54 U	1.54 U	1.54 U	1.54 U	1.54 U	1.54 U	1.54 U	1.54 U	1.54 U	1.54 U	1.54 U	1.54 U	1.54 U	1.54 U	1.54 U	1.54 U	1.54 U
	Tetrachloroethene	920	4,600	0.23	2.3	0.136 U	0.136 U	0.136 U	0.136 U	0.136 U	0.136 U	0.136 U	0.136 U	0.136 U	0.136 U	**0.196**	0.136 U	0.136 U	0.136 U	0.136 U	0.136 U	**1.76**
	1,1,1,2-Tetrachloroethane	NS	NS	NS	NS	1.37 U	1.37 U	1.37 U	1.37 U	1.37 U	1.37 U	1.37 U	1.37 U	1.37 U	1.37 U	1.37 U	1.37 U	1.37 U	1.37 U	1.37 U	1.37 U	1.37 U
	Chlorobenzene	4	20	NS	NS	0.920 U	0.920 U	0.920 U	0.920 U	0.920 U	0.920 U	0.920 U	0.920 U	0.920 U	0.920 U	0.920 U	0.920 U	0.920 U	0.920 U	0.920 U	0.920 U	0.920 U
	Ethylbenzene	200	1,000	NS	NS	0.868 U	**5.99**	0.868 U	**3.06**	0.868 U	**1.80**	0.868 U	0.868 U	0.868 U	0.868 U	0.868 U	0.868 U	0.868 U	0.868 U	0.868 U	0.868 U	**6.00**
	p/m-Xylene	20	100	NS	NS	1.74 U	**24.4**	1.74 U	**9.61**	1.74 U	**7.55**	1.74 U	1.74 U	1.74 U	1.74 U	1.74 U	1.74 U	1.74 U	1.74 U	1.74 U	1.74 U	**18.8**
	o-Xylene	20	100	NS	NS	0.868 U	**7.49**	0.868 U	**2.03**	0.868 U	**2.44**	0.868 U	0.868 U	0.868 U	0.868 U	0.868 U	0.868 U	0.868 U	0.868 U	0.868 U	0.868 U	**6.69**
	Xylenes (total)	20	100	NS	NS	1.74 U	**31.89**	1.74 U	**11.64**	1.74 U	**9.99**	1.74 U	1.74 U	1.74 U	1.74 U	1.74 U	1.74 U	1.74 U	1.74 U	1.74 U	1.74 U	**25.49**
	Bromoform	14	70	2.2	22	2.06 U	2.06 U	2.06 U	2.06 U	2.06 U	2.06 U	2.06 U	2.06 U	2.06 U	2.06 U	2.06 U	2.06 U	2.06 U	2.06 U	2.06 U	2.06 U	2.06 U
	Styrene	200	1,000	4.1	41	0.851 U	0.851 U	0.851 U	0.851 U	0.851 U	0.851 U	0.851 U	0.851 U	0.851 U	0.851 U	0.851 U	0.851 U	0.851 U	0.851 U	0.851 U	0.851 U	0.851 U
	1,1,2,2-Tetrachloroethane	19	95	0.041	0.41	1.37 U	1.37 U	1.37 U	1.37 U	1.37 U	1.37 U	1.37 U	1.37 U	1.37 U	1.37 U	1.37 U	1.37 U	1.37 U	1.37 U	1.37 U	1.37 U	1.37 U
	1,2,3-Trichloropropane	NS	NS	NS	NS	1.20 U	1.20 U	1.20 U	1.20 U	1.20 U	1.20 U	1.20 U	1.20 U	1.20 U	1.20 U	1.20 U	1.20 U	1.20 U	1.20 U	1.20 U	1.20 U	1.20 U
	Isopropylbenzene	10[a]	50[a]	NS	NS	0.982 U	0.982 U	0.982 U	0.982 U	0.982 U	0.982 U	0.982 U	0.982 U	0.982 U	0.982 U	0.982 U	0.982 U	0.982 U	0.982 U	0.982 U	0.982 U	0.982 U
	Bromobenzene	NS	NS	NS	NS	1.28 U	1.28 U	1.28 U	1.28 U	1.28 U	1.28 U	1.28 U	1.28 U	1.28 U	1.28 U	1.28 U	1.28 U	1.28 U	1.28 U	1.28 U	1.28 U	1.28 U
	2-Chlorotoluene	NS	NS	NS	NS	1.03 U	1.03 U	1.03 U	1.03 U	1.03 U	1.03 U	1.03 U	1.03 U	1.03 U	1.03 U	1.03 U	1.03 U	1.03 U	1.03 U	1.03 U	1.03 U	1.03 U
	n-Propylbenzene	10[a]	50[a]	NS	NS	0.982 U	**1.49**	0.982 U	0.982 U	0.982 U	0.982 U	0.982 U	0.982 U	0.982 U	0.982 U	0.982 U	0.982 U	0.982 U	0.982 U	0.982 U	0.982 U	**1.48**
	4-Chlorotoluene	NS	NS	NS	NS	1.03 U	1.03 U	1.03 U	1.03 U	1.03 U	1.03 U	1.03 U	1.03 U	1.03 U	1.03 U	1.03 U	1.03 U	1.03 U	1.03 U	1.03 U	1.03 U	1.03 U

Table 3
Summary of Analytical Results for Indoor Air Samples -- 2010
New Bedford High School
New Bedford, Massachusetts

Analysis	Analyte	Risk Management Criteria				TRC-IA-1		TRC-IA-2	TRC-IA-3	TRC-IA-4	TRC-IA-5		TRC-IA-6	TRC-IA-7	TRC-IA-8	TRC-IA-9	TRC-IA-10	TRC-IA-11	TRC-IA-12	TRC-IA-13	TRC-IA-14	TRC-IA-15
	Sample Date:					1/31/2010	4/20/2010	1/31/2010	1/31/2010	1/31/2010	1/31/2010	4/20/2010	4/20/2010	4/20/2010	4/20/2010	4/20/2010	4/20/2010	4/20/2010	4/20/2010	4/20/2010	4/20/2010	4/20/2010
		HI = 0.2	HI = 1.0	ELCR = 1 x 10^{-6}	ELCR = 1 x 10^{-5}	Mechanical Room B-114	Mechanical Room B-114	Classroom B-116	Honors Dining Room B-109	Cafeteria Storage Room	Classroom A-3-112	Classroom A-3-112	Classroom A-4-115	Classroom A-4-105	Classroom A-3-115	Classroom A-3-105	Classroom A-2115	Classroom A-2-105	Classroom A-1-116	Classroom A-2-112	Classroom A-1-110	Lecture Room D-120
	1,3,5-Trimethybenzene	10[a]	50[a]	NS	NS	0.982 U	**2.54**	0.982 U	0.982 U	0.982 U	0.982 U	0.982 U	0.982 U	0.982 U	0.982 U	0.982 U	0.982 U	0.982 U	0.982 U	0.982 U	0.982 U	**2.11**
	tert-Butylbenzene	10[a]	50[a]	NS	NS	1.10 U	1.10 U	1.10 U	1.10 U	1.10 U	1.10 U	1.10 U	1.10 U	1.10 U	1.10 U	1.10 U	1.10 U	1.10 U	1.10 U	1.10 U	1.10 U	1.10 U
	1,2,4-Trimethylbenzene	10[a]	50[a]	NS	NS	0.982 U	**9.04**	0.982 U	0.982 U	0.982 U	**3.18**	0.982 U	0.982 U	0.982 U	0.982 U	0.982 U	0.982 U	0.982 U	0.982 U	0.982 U	0.982 U	**6.96**
	1,3-Dichlorobenzene	40	200	NS	NS	1.20 U	1.20 U	1.20 U	1.20 U	1.20 U	1.20 U	1.20 U	1.20 U	1.20 U	1.20 U	1.20 U	1.20 U	1.20 U	1.20 U	1.20 U	1.20 U	1.20 U
	1,4-Dichlorobenzene	160	800	0.35	3.5	1.20 U	1.20 U	1.20 U	1.20 U	1.20 U	1.20 U	1.20 U	1.20 U	1.20 U	1.20 U	1.20 U	1.20 U	1.20 U	1.20 U	1.20 U	1.20 U	1.20 U
	sec-Butylbenzene	10[a]	50[a]	NS	NS	1.10 U	1.10 U	1.10 U	1.10 U	1.10 U	1.10 U	1.10 U	1.10 U	1.10 U	1.10 U	1.10 U	1.10 U	1.10 U	1.10 U	1.10 U	1.10 U	1.10 U
	p-Isopropyltoluene	10[a]	50[a]	NS	NS	1.10 U	1.10 U	1.10 U	1.10 U	1.10 U	1.10 U	1.10 U	1.10 U	1.10 U	1.10 U	1.10 U	1.10 U	1.10 U	1.10 U	1.10 U	1.10 U	1.10 U
	1,2-Dichlorobenzene	40	200	NS	NS	1.20 U	1.20 U	1.20 U	1.20 U	1.20 U	1.20 U	1.20 U	1.20 U	1.20 U	1.20 U	1.20 U	1.20 U	1.20 U	1.20 U	1.20 U	1.20 U	1.20 U
	n-Butylbenzene	10[a]	50[a]	NS	NS	1.10 U	1.10 U	1.10 U	1.10 U	1.10 U	1.10 U	1.10 U	1.10 U	1.10 U	1.10 U	1.10 U	1.10 U	1.10 U	1.10 U	1.10 U	1.10 U	1.10 U
	1,2-Dibromo-3-chloropropane	NS	NS	NS	NS	1.93 U	1.93 U	1.93 U	1.93 U	1.93 U	1.93 U	1.93 U	1.93 U	1.93 U	1.93 U	1.93 U	1.93 U	1.93 U	1.93 U	1.93 U	1.93 U	1.93 U
	1,2,4-Trichlorobenzene	40	200	NS	NS	1.48 U	1.48 U	1.48 U	1.48 U	1.48 U	1.48 U	1.48 U	1.48 U	1.48 U	1.48 U	1.48 U	1.48 U	1.48 U	1.48 U	1.48 U	1.48 U	1.48 U
	Naphthalene	0.61	3.05	NS	NS	1.05 U	1.05 U	1.05 U	1.05 U	1.05 U	1.05 U	1.05 U	1.05 U	1.05 U	1.05 U	1.05 U	1.05 U	1.05 U	1.05 U	1.05 U	1.05 U	1.05 U
	1,2,3-Trichlorobenzene	NS	NS	NS	NS	1.48 U	1.48 U	1.48 U	1.48 U	1.48 U	1.48 U	1.48 U	1.48 U	1.48 U	1.48 U	1.48 U	1.48 U	1.48 U	1.48 U	1.48 U	1.48 U	1.48 U
	Hexachlorobutadiene	0.14	0.7	0.11	1.1	2.13 U	2.13 U	2.13 U	2.13 U	2.13 U	2.13 U	2.13 U	2.13 U	2.13 U	2.13 U	2.13 U	2.13 U	2.13 U	2.13 U	2.13 U	2.13 U	2.13 U

Notes:

ug/m3 - micrograms per cubic meter.

NS - No risk management criteria exist for this compound.

U - Compound was not detected at specified quantitation limit.

Values in Bold indicate the compound was detected.

Values shown in Bold and shaded type exceed one or more of the listed criteria.

TO - Toxic organics.

ELCR - Excess lifetime cancer risk.

HI - Hazard index.

Risk Management Criteria - MassDEP Indoor Air Threshold Values for the Evaluation of a Vapor Intrusion Pathway, Attachment C, updated June 26, 2008.

(a) - The risk management criteria for C9-C10 aromatics used.

Table 4
Summary of Analytical Results for Storm Sewer Samples -- February 2010
New Bedford High School
New Bedford, Massachusetts

Analysis	Analyte		Sample ID:	HS-D-1		HS-D-2	HS-D-3	HS-D-4	HS-D-5	HS-D-6	HS-D-7	HS-D-8	HS-D-9	HS-ST-1
			Sample Date:	2/3/2010	2/3/2010	2/3/2010	2/3/2010	2/3/2010	2/3/2010	2/3/2010	2/3/2010	2/3/2010	2/3/2010	2/3/2010
		GW-2	GW-3		Field Dup									
VOCs														
(ug/L)	Acetone	50,000	50,000	100 U	100 U	100 U	100 U	100 U	100 U	100 U	100 U	100 U	100 U	100 U
	tert-Amyl Methyl Ether (TAME)	NS	NS	0.50 U	0.50 U	0.50 U	0.50 U	0.50 U	0.50 U	0.50 U	0.50 U	0.50 U	0.50 U	0.50 U
	Benzene	2,000	10,000	1.0 U	1.0 U	1.0 U	1.0 U	1.0 U	1.0 U	1.0 U	1.0 U	1.0 U	1.0 U	1.0 U
	Bromobenzene	NS	NS	1.0 U	1.0 U	1.0 U	1.0 U	1.0 U	1.0 U	1.0 U	1.0 U	1.0 U	1.0 U	1.0 U
	Bromochloromethane	NS	NS	1.0 U	1.0 U	1.0 U	1.0 U	1.0 U	1.0 U	1.0 U	1.0 U	1.0 U	1.0 U	1.0 U
	Bromodichloromethane	6	50,000	5.0 U	5.0 U	5.0 U	5.0 U	5.0 U	5.0 U	5.0 U	5.0 U	5.0 U	5.0 U	5.0 U
	Bromoform	700	50,000	5.0 U	5.0 U	5.0 U	5.0 U	5.0 U	5.0 U	5.0 U	5.0 U	5.0 U	5.0 U	5.0 U
	Bromomethane	7	800	2.0 U	2.0 U	2.0 U	2.0 U	2.0 U	2.0 U	2.0 U	2.0 U	2.0 U	2.0 U	2.0 U
	2-Butanone (MEK)	50,000	50,000	20 U	20 U	20 U	20 U	20 U	20 U	20 U	20 U	20 U	20 U	20 U
	n-Butylbenzene	7,000(1)	50,000(1)	1.0 U	1.0 U	1.0 U	1.0 U	1.0 U	1.0 U	1.0 U	1.0 U	1.0 U	1.0 U	1.0 U
	sec-Butylbenzene	7,000(1)	50,000(1)	1.0 U	1.0 U	1.0 U	1.0 U	1.0 U	1.0 U	1.0 U	1.0 U	1.0 U	1.0 U	1.0 U
	tert-Butylbenzene	7,000(1)	50,000(1)	1.0 U	1.0 U	1.0 U	1.0 U	1.0 U	1.0 U	1.0 U	1.0 U	1.0 U	1.0 U	1.0 U
	tert-Butyl Ethyl Ether (TBEE)	NS	NS	0.50 U	0.50 U	0.50 U	0.50 U	0.50 U	0.50 U	0.50 U	0.50 U	0.50 U	0.50 U	0.50 U
	Carbon Disulfide	NS	NS	50 U	50 U	50 U	50 U	50 U	50 U	50 U	50 U	50 U	50 U	50 U
	Carbon Tetrachloride	2	5,000	5.0 U	5.0 U	5.0 U	5.0 U	5.0 U	5.0 U	5.0 U	5.0 U	5.0 U	5.0 U	5.0 U
	Chlorobenzene	200	1,000	1.0 U	1.0 U	1.0 U	1.0 U	1.0 U	1.0 U	1.0 U	1.0 U	1.0 U	1.0 U	1.0 U
	Chlorodibromomethane	20	50,000	5.0 U	5.0 U	5.0 U	5.0 U	5.0 U	5.0 U	5.0 U	5.0 U	5.0 U	5.0 U	5.0 U
	Chloroethane	NS	NS	2.0 U	2.0 U	2.0 U	2.0 U	2.0 U	2.0 U	2.0 U	2.0 U	2.0 U	2.0 U	2.0 U
	Chloroform	50	20,000	2.0 U	2.0 U	2.0 U	2.0 U	2.0 U	**3.0**	2.0 U	2.0 U	2.0 U	2.0 U	2.0 U
	Chloromethane	NS	NS	2.0 U	2.0 U	2.0 U	2.0 U	2.0 U	2.0 U	2.0 U	2.0 U	2.0 U	2.0 U	2.0 U
	2-Chlorotoluene	NS	NS	1.0 U	1.0 U	1.0 U	1.0 U	1.0 U	1.0 U	1.0 U	1.0 U	1.0 U	1.0 U	1.0 U
	4-Chlorotoluene	NS	NS	1.0 U	1.0 U	1.0 U	1.0 U	1.0 U	1.0 U	1.0 U	1.0 U	1.0 U	1.0 U	1.0 U
	1,2-Dibromo-3-chloropropane (DBCP	NS	NS	5.0 U	5.0 U	5.0 U	5.0 U	5.0 U	5.0 U	5.0 U	5.0 U	5.0 U	5.0 U	5.0 U
	1,2-Dibromoethane (EDB)	2	50,000	0.50 U	0.50 U	0.50 U	0.50 U	0.50 U	0.50 U	0.50 U	0.50 U	0.50 U	0.50 U	0.50 U
	Dibromomethane	NS	NS	1.0 U	1.0 U	1.0 U	1.0 U	1.0 U	1.0 U	1.0 U	1.0 U	1.0 U	1.0 U	1.0 U
	1,2-Dichlorobenzene	2,000	2,000	1.0 U	1.0 U	1.0 U	1.0 U	1.0 U	1.0 U	1.0 U	1.0 U	1.0 U	1.0 U	1.0 U
	1,3-Dichlorobenzene	2,000	50,000	1.0 U	1.0 U	1.0 U	1.0 U	1.0 U	1.0 U	1.0 U	1.0 U	1.0 U	1.0 U	1.0 U
	1,4-Dichlorobenzene	200	8,000	1.0 U	1.0 U	1.0 U	1.0 U	1.0 U	1.0 U	1.0 U	1.0 U	1.0 U	1.0 U	1.0 U
	Dichlorodifluoromethane (Freon 12)	NS	NS	2.0 U	2.0 U	2.0 U	2.0 U	2.0 U	2.0 U	2.0 U	2.0 U	2.0 U	2.0 U	2.0 U
	1,1-Dichloroethane	1,000	20,000	1.0 U	1.0 U	1.0 U	1.0 U	1.0 U	1.0 U	1.0 U	1.0 U	1.0 U	1.0 U	1.0 U
	1,2-Dichloroethane	5	20,000	1.0 U	1.0 U	1.0 U	1.0 U	1.0 U	1.0 U	1.0 U	1.0 U	1.0 U	1.0 U	1.0 U
	1,1-Dichloroethylene	80	30,000	1.0 U	1.0 U	1.0 U	1.0 U	1.0 U	1.0 U	1.0 U	1.0 U	1.0 U	1.0 U	1.0 U
	cis-1,2-Dichloroethylene	100	50,000	1.0 U	1.0 U	1.0 U	1.0 U	1.0 U	**1.0**	1.0 U	1.0 U	1.0 U	1.0 U	1.0 U
	trans-1,2-Dichloroethylene	90	50,000	1.0 U	1.0 U	1.0 U	1.0 U	1.0 U	1.0 U	1.0 U	1.0 U	1.0 U	1.0 U	1.0 U
	1,2-Dichloropropane	3	50,000	1.0 U	1.0 U	1.0 U	1.0 U	1.0 U	1.0 U	1.0 U	1.0 U	1.0 U	1.0 U	1.0 U
	1,3-Dichloropropane	NS	NS	0.50 U	0.50 U	0.50 U	0.50 U	0.50 U	0.50 U	0.50 U	0.50 U	0.50 U	0.50 U	0.50 U
	2,2-Dichloropropane	NS	NS	1.0 U	1.0 U	1.0 U	1.0 U	1.0 U	1.0 U	1.0 U	1.0 U	1.0 U	1.0 U	1.0 U
	1,1-Dichloropropene	NS	NS	2.0 U	2.0 U	2.0 U	2.0 U	2.0 U	2.0 U	2.0 U	2.0 U	2.0 U	2.0 U	2.0 U
	cis-1,3-Dichloropropene	10(2)	200(2)	1.0 U	1.0 U	1.0 U	1.0 U	1.0 U	1.0 U	1.0 U	1.0 U	1.0 U	1.0 U	1.0 U
	trans-1,3-Dichloropropene	10(2)	200(2)	5.0 U	5.0 U	5.0 U	5.0 U	5.0 U	5.0 U	5.0 U	5.0 U	5.0 U	5.0 U	5.0 U
	Diethyl Ether	NS	NS	2.0 U	2.0 U	2.0 U	2.0 U	2.0 U	2.0 U	2.0 U	2.0 U	2.0 U	2.0 U	2.0 U
	Diisopropyl Ether (DIPE)	NS	NS	20 U	20 U	20 U	20 U	20 U	20 U	20 U	20 U	20 U	20 U	20 U
	1,4-Dioxane	6,000	50,000	50 U	50 U	50 U	50 U	50 U	50 U	50 U	50 U	50 U	50 U	50 U

Table 4
Summary of Analytical Results for Storm Sewer Samples -- February 2010
New Bedford High School
New Bedford, Massachusetts

Analysis	Analyte		Sample ID:	HS-D-1		HS-D-2	HS-D-3	HS-D-4	HS-D-5	HS-D-6	HS-D-7	HS-D-8	HS-D-9	HS-ST-1
			Sample Date:	2/3/2010	2/3/2010	2/3/2010	2/3/2010	2/3/2010	2/3/2010	2/3/2010	2/3/2010	2/3/2010	2/3/2010	2/3/2010
		GW-2	GW-3		Field Dup									
	Ethylbenzene	20,000	5,000	1.0 U	1.0 U	1.0 U	1.0 U	1.0 U	1.0 U	1.0 U	1.0 U	1.0 U	1.0 U	1.0 U
	Hexachlorobutadiene	1	3,000	1.0 U	1.0 U	1.0 U	1.0 U	1.0 U	1.0 U	1.0 U	1.0 U	1.0 U	1.0 U	1.0 U
	2-Hexanone (MBK)	NS	NS	10 U	10 U	10 U	10 U	10 U	10 U	10 U	10 U	10 U	10 U	10 U
	Isopropylbenzene (Cumene)	7,000(1)	50,000(1)	1.0 U	1.0 U	1.0 U	1.0 U	1.0 U	1.0 U	1.0 U	1.0 U	1.0 U	1.0 U	1.0 U
	p-Isopropyltoluene (p-Cymene)	7,000(1)	50,000(1)	1.0 U	1.0 U	1.0 U	1.0 U	1.0 U	1.0 U	1.0 U	1.0 U	1.0 U	1.0 U	1.0 U
	Methyl tert-Butyl Ether (MTBE)	50,000	50,000	1.0 U	1.0 U	1.0 U	1.0 U	1.0 U	1.0 U	1.0 U	1.0 U	1.0 U	1.0 U	1.0 U
	Methylene Chloride	10,000	50,000	5.0 U	5.0 U	5.0 U	5.0 U	5.0 U	5.0 U	5.0 U	5.0 U	5.0 U	5.0 U	5.0 U
	4-Methyl-2-pentanone (MIBK)	50,000	50,000	10 U	10 U	10 U	10 U	10 U	10 U	10 U	10 U	10 U	10 U	10 U
	Naphthalene	1,000	20,000	5.0 U	5.0 U	5.0 U	5.0 U	5.0 U	5.0 U	5.0 U	5.0 U	5.0 U	5.0 U	5.0 U
	n-Propylbenzene	7,000(1)	50,000(1)	1.0 U	1.0 U	1.0 U	1.0 U	1.0 U	1.0 U	1.0 U	1.0 U	1.0 U	1.0 U	1.0 U
	Styrene	100	6,000	1.0 U	1.0 U	1.0 U	1.0 U	1.0 U	1.0 U	1.0 U	1.0 U	1.0 U	1.0 U	1.0 U
	1,1,1,2-Tetrachloroethane	10	50,000	5.0 U	5.0 U	5.0 U	5.0 U	5.0 U	5.0 U	5.0 U	5.0 U	5.0 U	5.0 U	5.0 U
	1,1,2,2-Tetrachloroethane	9	50,000	0.50 U	0.50 U	0.50 U	0.50 U	0.50 U	0.50 U	0.50 U	0.50 U	0.50 U	0.50 U	0.50 U
	Tetrachloroethylene	50	30,000	1.0 U	1.0 U	1.0 U	1.0 U	1.0 U	1.0 U	1.0 U	1.0 U	1.0 U	1.0 U	1.0 U
	Tetrahydrofuran	NS	NS	10 U	10 U	10 U	10 U	10 U	10 U	10 U	10 U	10 U	10 U	10 U
	Toluene	50,000	40,000	1.0 U	1.0 U	1.0 U	1.0 U	1.0 U	1.0 U	1.0 U	1.0 U	1.0 U	1.0 U	1.0 U
	1,2,3-Trichlorobenzene	NS	NS	5.0 U	5.0 U	5.0 U	5.0 U	5.0 U	5.0 U	5.0 U	5.0 U	5.0 U	5.0 U	5.0 U
	1,2,4-Trichlorobenzene	2,000	50,000	1.0 U	1.0 U	1.0 U	1.0 U	1.0 U	1.0 U	1.0 U	1.0 U	1.0 U	1.0 U	1.0 U
	1,1,1-Trichloroethane	4,000	20,000	1.0 U	1.0 U	1.0 U	1.0 U	1.0 U	**3.3**	1.0 U	1.0 U	1.0 U	1.0 U	1.0 U
	1,1,2-Trichloroethane	900	50,000	1.0 U	1.0 U	1.0 U	1.0 U	1.0 U	1.0 U	1.0 U	1.0 U	1.0 U	1.0 U	1.0 U
	Trichloroethylene	30	5,000	1.0 U	1.0 U	1.0 U	1.0 U	1.0 U	1.0 U	1.0 U	1.0 U	1.0 U	1.0 U	1.0 U
	Trichlorofluoromethane (Freon 11)	NS	NS	2.0 U	2.0 U	2.0 U	2.0 U	2.0 U	2.0 U	2.0 U	2.0 U	2.0 U	2.0 U	2.0 U
	1,2,3-Trichloropropane	NS	NS	2.0 U	2.0 U	2.0 U	2.0 U	2.0 U	2.0 U	2.0 U	2.0 U	2.0 U	2.0 U	2.0 U
	1,2,4-Trimethylbenzene	7,000(1)	50,000(1)	1.0 U	1.0 U	1.0 U	1.0 U	1.0 U	1.0 U	1.0 U	1.0 U	1.0 U	1.0 U	1.0 U
	1,3,5-Trimethylbenzene	7,000(1)	50,000(1)	1.0 U	1.0 U	1.0 U	1.0 U	1.0 U	1.0 U	1.0 U	1.0 U	1.0 U	1.0 U	1.0 U
	Vinyl Chloride	2	50,000	2.0 U	2.0 U	2.0 U	2.0 U	2.0 U	2.0 U	2.0 U	2.0 U	2.0 U	2.0 U	2.0 U
	m+p Xylene	9,000	5,000	2.0 U	2.0 U	2.0 U	2.0 U	2.0 U	2.0 U	2.0 U	2.0 U	2.0 U	2.0 U	2.0 U
	o-Xylene	9,000	5,000	1.0 U	1.0 U	1.0 U	1.0 U	1.0 U	1.0 U	1.0 U	1.0 U	1.0 U	1.0 U	1.0 U

Notes:

ug/L - micrograms per liter.

NS - No MassDEP standards exist for this compound.

U - Compound was not detected at specified quantitation limit.

Values in **Bold** indicate the compound was detected.

VOCs - Volatile Organic Compounds.

(1) - MassDEP Method 1 standards for C9-C10 aromatic hydrocarbons used.

(2) - MassDEP Method 1 standards for 1,3-Dichloropropene used.

Table 5
Summary of Analytical Results for Sanitary Sewer Samples -- February 2010
New Bedford High School
New Bedford, Massachusetts

Analysis	Sample ID: / Sample Date: / Analyte	LS-MH-1 2/17/2010	SS-MH-1 2/17/2010	SS-MH-2 2/17/2010	SS-MH-3 2/17/2010	SS-MH-4 2/17/2010	SS-MH-4 2/17/2010 Field Dup
VOCs							
(ug/L)	Acetone	**630**	500 U	50 U	50 U	50 U	50 U
	tert-Amyl Methyl Ether (TAME)	0.50 U	5.0 U	0.50 U	0.50 U	0.50 U	0.50 U
	Benzene	1.0 U	10 U	1.0 U	1.0 U	1.0 U	1.0 U
	Bromobenzene	1.0 U	10 U	1.0 U	1.0 U	1.0 U	1.0 U
	Bromochloromethane	1.0 U	10 U	1.0 U	1.0 U	1.0 U	1.0 U
	Bromodichloromethane	1.0 U	10 U	5.0 U	1.0 U	**1.3**	1.0 U
	Bromoform	10 U	100 U	10 U	10 U	10 U	10 U
	Bromomethane	5.0 U	50 U	10 U	5.0 U	5.0 U	5.0 U
	2-Butanone (MEK)	20 U	200 U	20 U	20 U	20 U	20 U
	n-Butylbenzene	1.0 U	10 U	1.0 U	1.0 U	1.0 U	1.0 U
	sec-Butylbenzene	1.0 U	10 U	1.0 U	1.0 U	1.0 U	1.0 U
	tert-Butylbenzene	1.0 U	10 U	1.0 U	1.0 U	1.0 U	1.0 U
	tert-Butyl Ethyl Ether (TBEE)	0.50 U	5.0 U	0.50 U	0.50 U	0.50 U	0.50 U
	Carbon Disulfide	2.0 U	20 U	50 U	2.0 U	2.0 U	2.0 U
	Carbon Tetrachloride	1.0 U	10 U	10 U	1.0 U	1.0 U	1.0 U
	Chlorobenzene	1.0 U	10 U	1.0 U	1.0 U	1.0 U	1.0 U
	Chlorodibromomethane	5.0 U	50 U	5.0 U	5.0 U	5.0 U	5.0 U
	Chloroethane	2.0 U	20 U	2.0 U	2.0 U	2.0 U	2.0 U
	Chloroform	2.0 U	20 U	**7.8**	2.0 U	**7.8**	2.0 U
	Chloromethane	2.0 U	20 U	2.0 U	2.0 U	2.0 U	2.0 U
	2-Chlorotoluene	1.0 U	10 U	1.0 U	1.0 U	1.0 U	1.0 U
	4-Chlorotoluene	1.0 U	10 U	1.0 U	1.0 U	1.0 U	1.0 U
	1,2-Dibromo-3-chloropropane (DBCP)	5.0 U	50 U	10 U	5.0 U	5.0 U	5.0 U
	1,2-Dibromoethane (EDB)	0.50 U	5.0 U	0.50 U	0.50 U	0.50 U	0.50 U
	Dibromomethane	1.0 U	10 U	1.0 U	1.0 U	1.0 U	1.0 U
	1,2-Dichlorobenzene	1.0 U	10 U	1.0 U	1.0 U	1.0 U	1.0 U
	1,3-Dichlorobenzene	1.0 U	10 U	1.0 U	1.0 U	1.0 U	1.0 U
	1,4-Dichlorobenzene	**19**	10 U	1.0 U	1.0 U	1.0 U	1.0 U
	Dichlorodifluoromethane (Freon 12)	2.0 U	20 U	2.0 U	2.0 U	2.0 U	2.0 U
	1,1-Dichloroethane	1.0 U	10 U	1.0 U	1.0 U	1.0 U	1.0 U
	1,2-Dichloroethane	1.0 U	10 U	1.0 U	1.0 U	1.0 U	1.0 U
	1,1-Dichloroethylene	1.0 U	10 U	1.0 U	1.0 U	1.0 U	1.0 U
	cis-1,2-Dichloroethylene	1.0 U	10 U	1.0 U	**3.1**	1.0 U	**2.6**
	trans-1,2-Dichloroethylene	1.0 U	10 U	1.0 U	**1.4**	1.0 U	**1.2**
	1,2-Dichloropropane	1.0 U	10 U	1.0 U	1.0 U	1.0 U	1.0 U
	1,3-Dichloropropane	0.50 U	5.0 U	0.50 U	0.50 U	0.50 U	0.50 U
	2,2-Dichloropropane	1.0 U	10 U	10 U	1.0 U	1.0 U	1.0 U
	1,1-Dichloropropene	2.0 U	20 U	2.0 U	2.0 U	2.0 U	2.0 U

Table 5
Summary of Analytical Results for Sanitary Sewer Samples -- February 2010
New Bedford High School
New Bedford, Massachusetts

Analysis	Sample ID: / Sample Date: / Analyte	LS-MH-1 2/17/2010	SS-MH-1 2/17/2010	SS-MH-2 2/17/2010	SS-MH-3 2/17/2010	SS-MH-4 2/17/2010	SS-MH-4 2/17/2010 Field Dup
	cis-1,3-Dichloropropene	0.50 U	5.0 U	5.0 U	0.50 U	0.50 U	0.50 U
	trans-1,3-Dichloropropene	0.50 U	5.0 U	5.0 U	0.50 U	0.50 U	0.50 U
	Diethyl Ether	2.0 U	20 U	2.0 U	2.0 U	2.0 U	2.0 U
	Diisopropyl Ether (DIPE)	0.50 U	5.0 U	0.50 U	0.50 U	0.50 U	0.50 U
	1,4-Dioxane	50 U	500 U	50 U	50 U	50 U	50 U
	Ethylbenzene	1.0 U	10 U	1.0 U	1.0 U	1.0 U	1.0 U
	Hexachlorobutadiene	5.0 U	50 U	1.0 U	5.0 U	5.0 U	5.0 U
	2-Hexanone (MBK)	10 U	100 U	10 U	10 U	10 U	10 U
	Isopropylbenzene (Cumene)	1.0 U	10 U	1.0 U	1.0 U	1.0 U	1.0 U
	p-Isopropyltoluene (p-Cymene)	1.0 U	10 U	1.0 U	1.0 U	1.0 U	1.0 U
	Methyl tert-Butyl Ether (MTBE)	1.0 U	10 U	1.0 U	1.0 U	1.0 U	1.0 U
	Methylene Chloride	20 U	200 U	5.0 U	20 U	20 U	20 U
	4-Methyl-2-pentanone (MIBK)	10 U	100 U	10 U	10 U	10 U	10 U
	Naphthalene	5.0 U	50 U	2.0 U	5.0 U	5.0 U	5.0 U
	n-Propylbenzene	1.0 U	10 U	1.0 U	1.0 U	1.0 U	1.0 U
	Styrene	1.0 U	10 U	1.0 U	1.0 U	1.0 U	1.0 U
	1,1,1,2-Tetrachloroethane	1.0 U	10 U	5.0 U	1.0 U	1.0 U	1.0 U
	1,1,2,2-Tetrachloroethane	0.50 U	5.0 U	0.50 U	0.50 U	0.50 U	0.50 U
	Tetrachloroethylene	1.0 U	10 U	1.0 U	1.0 U	1.0 U	1.0 U
	Tetrahydrofuran	10 U	100 U	10 U	10 U	10 U	10 U
	Toluene	**3.3**	10 U	1.0 U	1.0 U	1.0 U	1.0 U
	1,2,3-Trichlorobenzene	5.0 U	50 U	5.0 U	5.0 U	5.0 U	5.0 U
	1,2,4-Trichlorobenzene	5.0 U	50 U	1.0 U	5.0 U	5.0 U	5.0 U
	1,1,1-Trichloroethane	1.0 U	10 U	5.0 U	1.0 U	1.0 U	1.0 U
	1,1,2-Trichloroethane	1.0 U	10 U	1.0 U	1.0 U	1.0 U	1.0 U
	Trichloroethylene	1.0 U	10 U	1.0 U	1.0 U	1.0 U	1.0 U
	Trichlorofluoromethane (Freon 11)	2.0 U	20 U	2.0 U	2.0 U	2.0 U	2.0 U
	1,2,3-Trichloropropane	2.0 U	20 U	2.0 U	2.0 U	2.0 U	2.0 U
	1,2,4-Trimethylbenzene	1.0 U	10 U	1.0 U	1.0 U	1.0 U	1.0 U
	1,3,5-Trimethylbenzene	1.0 U	10 U	1.0 U	1.0 U	1.0 U	1.0 U
	Vinyl Chloride	2.0 U	20 U	2.0 U	2.0 U	2.0 U	2.0 U
	m+p Xylene	2.0 U	20 U	2.0 U	2.0 U	2.0 U	2.0 U
	o-Xylene	1.0 U	10 U	1.0 U	1.0 U	1.0 U	1.0 U

Notes:

ug/L - micrograms per liter.

U - Compound was not detected at specified quantitation limit.

Values in Bold indicate the compound was detected.

VOCs - Volatile Organic Compounds.

Table 6
Summary of Analytical Results for Soil Gas Samples -- 2010
New Bedford High School
New Bedford, Massachusetts

Analysis	Analyte	Sample Location:	PVP-1		PVP-2		PVP-3		PVP-4		PVP-5			PVP-6		PVP-7		PVP-8		TVP-2	TVP-5	TVP-7	TVP-8
		Location Room:	Classroom	A-4-115	Classroom	A-3-115	Classroom	A-3-112	Classroom	A-2-115	Classroom A-1-105			Mechanical Room B-114		Wood Shop	D-105	Auto Shop	D-116	Classroom A-4-105	Classroom A-3-105	Classroom A-2-105	Classroom A-1-115
		Sample ID:	TVP-1	PVP-1	TVP-3	PVP-2	TVP-4	PVP-3	TVP-6	PVP-4	TVP-9		PVP-5	PVP-6		TVP-10	PVP-7	TVP-11	PVP-8	TVP-2	TVP-5	TVP-7	TVP-8
		Sample Date:	2/15/2010	4/20/2010	2/15/2010	4/20/2010	2/15/2010	4/20/2010	2/15/2010	4/20/2010	2/15/2010	2/15/2010 Field Dup	4/20/2010	4/9/2010	4/20/2010	2/15/2010	4/20/2010	2/15/2010	4/20/2010	2/15/2010	2/15/2010	2/15/2010	2/15/2010
		Screening Values*																					
TO-15 (ug/m3)	1,1,1-Trichloroethane	30	10.9 U	1.09 U	2.72 U	1.09 U	1.09 U	1.09 U	1.09 U	1.09 U	1.09 U	1.09 U	1.09 U	128 U	61.6 U	**12.7**	**2.15**	10.9 U	2.18 U	1.09 U	1.09 U	1.09 U	1.09 U
	1,1,2,2-Tetrachloroethane	0.41	13.7 U	1.37 U	3.43 U	1.37 U	1.37 U	1.37 U	1.37 U	1.37 U	1.37 U	1.37 U	1.37 U	162 U	77.4 U	1.37 U	1.37 U	13.7 U	2.74 U	1.37 U	1.37 U	1.37 U	1.37 U
	1,1,2-Trichloroethane	1.5	10.9 U	1.09 U	2.72 U	1.09 U	1.09 U	1.09 U	1.09 U	1.09 U	1.09 U	1.09 U	1.09 U	128 U	61.6 U	1.09 U	1.09 U	10.9 U	2.18 U	1.09 U	1.09 U	1.09 U	1.09 U
	1,1-Dichloroethane	8	8.09 U	0.809 U	2.02 U	0.809 U	0.809 U	0.809 U	0.809 U	0.809 U	0.809 U	0.809 U	0.809 U	95.4 U	45.6 U	0.809 U	0.809 U	8.09 U	1.62 U	0.809 U	0.809 U	0.809 U	0.809 U
	1,1-Dichloroethene	8	7.92 U	0.792 U	1.98 U	0.792 U	0.792 U	0.792 U	0.792 U	0.792 U	0.792 U	0.792 U	0.792 U	**163**	**313**	**2.20**	0.792 U	7.92 U	1.58 U	0.792 U	0.792 U	0.792 U	0.792 U
	1,2,4-Trichlorobenzene	34	14.8 U	1.48 U	3.71 U	1.48 U	1.48 U	1.48 U	1.48 U	1.48 U	1.48 U	1.48 U	1.48 U	175 U	83.7 U	1.48 U	1.48 U	14.8 U	2.97 U	1.48 U	1.48 U	1.48 U	1.48 U
	1,2,4-Trimethylbenzene	100[1]	9.82 U	0.982 U	2.46 U	0.982 U	0.982 U	0.982 U	0.982 U	**1.92**	**7.24**	**1.86**	0.982 U	116 U	55.4 U	**16.1**	0.982 U	9.82 U	1.96 U	**1.78**	0.982 U	0.982 U	0.982 U
	1,2-Dibromoethane	0.11	15.4 U	1.54 U	3.84 U	1.54 U	1.54 U	1.54 U	1.54 U	1.54 U	1.54 U	1.54 U	1.54 U	181 U	86.7 U	1.54 U	1.54 U	15.4 U	3.07 U	1.54 U	1.54 U	1.54 U	1.54 U
	1,2-Dichlorobenzene	7.2	12.0 U	1.20 U	3.00 U	1.20 U	1.20 U	1.20 U	1.20 U	1.20 U	1.20 U	1.20 U	1.20 U	142 U	67.8 U	1.20 U	1.20 U	12.0 U	2.40 U	1.20 U	1.20 U	1.20 U	1.20 U
	1,2-Dichloroethane	0.9	8.09 U	0.809 U	2.02 U	0.809 U	0.809 U	0.809 U	0.809 U	0.809 U	0.809 U	0.809 U	0.809 U	95.4 U	45.6 U	0.809 U	0.809 U	8.09 U	1.62 U	0.809 U	0.809 U	0.809 U	0.809 U
	1,2-Dichloropropane	1.3	9.24 U	0.924 U	2.31 U	0.924 U	0.924 U	0.924 U	0.924 U	0.924 U	0.924 U	0.924 U	0.924 U	109 U	52.1 U	0.924 U	0.924 U	9.24 U	1.85 U	0.924 U	0.924 U	0.924 U	0.924 U
	1,3,5-Trimethybenzene	100[1]	9.82 U	0.982 U	2.46 U	0.982 U	0.982 U	0.982 U	0.982 U	0.982 U	**1.39**	0.982 U	0.982 U	116 U	55.4 U	**3.19**	0.982 U	9.82 U	1.96 U	0.982 U	0.982 U	0.982 U	0.982 U
	1,3-Dichlorobenzene	6	12.0 U	1.20 U	3.00 U	1.20 U	1.20 U	1.20 U	1.20 U	1.20 U	1.20 U	1.20 U	1.20 U	142 U	67.8 U	1.20 U	1.20 U	12.0 U	2.40 U	1.20 U	1.20 U	1.20 U	1.20 U
	1,4-Dichlorobenzene	5	12.0 U	1.20 U	3.00 U	1.20 U	1.20 U	1.20 U	1.20 U	1.20 U	1.20 U	1.20 U	1.20 U	142 U	67.8 U	1.20 U	1.20 U	12.0 U	2.40 U	1.20 U	1.20 U	1.20 U	1.20 U
	1,4-Dioxane	5.9	7.20 U	0.720 U	1.80 U	0.720 U	0.720 U	0.720 U	0.720 U	0.720 U	0.720 U	0.720 U	0.720 U	84.9 U	40.6 U	0.720 U	0.720 U	7.20 U	1.44 U	0.720 U	0.720 U	0.720 U	0.720 U
	2-Butanone	120	**17.3**	0.589 U	**36.3**	**3.04**	**5.42**	**5.45**	**3.88**	**21.1**	**2.57**	**3.42**	**6.75**	69.5 U	33.3 U	**19.1**	**1.64**	5.89 U	**6.32**	**4.06**	**2.93**	**5.08**	**5.68**
	2-Hexanone	NS	8.19 U	0.819 U	2.05 U	0.819 U	0.819 U	0.819 U	0.819 U	**1.41**	0.819 U	0.819 U	0.819 U	96.5 U	46.2 U	0.819 U	0.819 U	8.19 U	1.64 U	0.819 U	0.819 U	0.819 U	0.819 U
	Acetone	910	**1,100**	**4.10**	**665**	**24.5**	**137**	**29.8**	**52.9**	**158**	**24.1**	**33.5**	**71.3**	280 U	134 U	**325**	**13.3**	**4,730**	**62.8**	**94.8**	**31.0**	**46.7**	**167**
	Benzene	23	**84.7**	0.638 U	**33.6**	0.638 U	**3.93**	0.638 U	**0.964**	**6.36**	**1.74**	**1.95**	**3.71**	75.3 U	36.0 U	**4.38**	**3.62**	6.38 U	**10.4**	**1.36**	**1.54**	**1.42**	**1.60**
	Bromodichloromethane	1.4	13.4 U	1.34 U	3.35 U	1.34 U	1.34 U	1.34 U	1.34 U	1.34 U	1.34 U	1.34 U	1.34 U	158 U	75.6 U	1.34 U	1.34 U	13.4 U	2.68 U	1.34 U	1.34 U	1.34 U	1.34 U
	Bromoform	22	20.6 U	2.06 U	5.16 U	2.06 U	2.06 U	2.06 U	2.06 U	2.06 U	2.06 U	2.06 U	2.06 U	244 U	117 U	2.06 U	2.06 U	20.6 U	4.13 U	2.06 U	2.06 U	2.06 U	2.06 U
	Bromomethane	6	7.76 U	0.776 U	1.94 U	0.776 U	0.776 U	0.776 U	0.776 U	0.776 U	0.776 U	0.776 U	0.776 U	91.5 U	43.8 U	0.776 U	0.776 U	7.76 U	1.55 U	0.776 U	0.776 U	0.776 U	0.776 U
	Carbon disulfide	NS	6.22 U	0.622 U	**3.04**	**1.09**	0.622 U	0.622 U	0.622 U	0.622 U	0.622 U	0.622 U	0.622 U	73.4 U	35.1 U	0.622 U	0.622 U	6.22 U	1.24 U	0.622 U	0.622 U	0.622 U	0.622 U
	Carbon tetrachloride	5.4	12.6 U	1.26 U	3.14 U	1.26 U	1.26 U	1.26 U	1.26 U	1.26 U	1.26 U	1.26 U	1.26 U	148 U	71.0 U	1.26 U	1.26 U	12.6 U	2.51 U	1.26 U	1.26 U	1.26 U	1.26 U
	Chlorobenzene	23	9.20 U	0.920 U	2.30 U	0.920 U	0.920 U	0.920 U	0.920 U	0.920 U	0.920 U	0.920 U	0.920 U	108 U	51.9 U	0.920 U	0.920 U	9.20 U	1.84 U	0.920 U	0.920 U	0.920 U	0.920 U
	Chloroethane	NS	5.27 U	0.527 U	**1.83**	0.527 U	0.527 U	0.527 U	0.527 U	0.527 U	0.527 U	0.527 U	0.527 U	62.2 U	29.8 U	**0.678**	0.527 U	5.27 U	1.05 U	0.527 U	0.527 U	0.527 U	0.527 U
	Chloroform	19	9.76 U	0.976 U	2.44 U	0.976 U	0.976 U	0.976 U	**2.28**	0.976 U	0.976 U	0.976 U	0.976 U	115 U	55.1 U	0.976 U	0.976 U	9.76 U	1.95 U	0.976 U	0.976 U	0.976 U	0.976 U
	Chloromethane	NS	4.13 U	0.413 U	**3.06**	0.413 U	**0.442**	0.413 U	0.413 U	**1.04**	0.413 U	0.413 U	**1.26**	48.6 U	23.3 U	**0.792**	**0.512**	4.13 U	**3.18**	0.413 U	0.413 U	0.413 U	**0.454**
	cis-1,2-Dichloroethene	8	7.92 U	0.792 U	1.98 U	0.792 U	0.792 U	0.792 U	0.792 U	0.792 U	0.792 U	0.792 U	0.792 U	**1,270**	**2,750**	0.792 U	0.792 U	7.92 U	1.58 U	0.792 U	0.792 U	0.792 U	0.792 U
	cis-1,3-Dichloropropene	6	9.07 U	0.907 U	2.27 U	0.907 U	0.907 U	0.907 U	0.907 U	0.907 U	0.907 U	0.907 U	0.907 U	107 U	51.2 U	0.907 U	0.907 U	9.07 U	1.81 U	0.907 U	0.907 U	0.907 U	0.907 U
	Dibromochloromethane	1	17.0 U	1.70 U	4.26 U	1.70 U	1.70 U	1.70 U	1.70 U	1.70 U	1.70 U	1.70 U	1.70 U	201 U	96.1 U	1.70 U	1.70 U	17.0 U	3.40 U	1.70 U	1.70 U	1.70 U	1.70 U
	Dichlorodifluoromethane	NS	9.88 U	**3.29**	2.47 U	**2.78**	**2.44**	**2.61**	**2.26**	**2.02**	**2.26**	**2.65**	**3.34**	116 U	55.8 U	**2.35**	**2.59**	9.88 U	**2.83**	**2.15**	**2.21**	**2.32**	**2.45**
	Ethylbenzene	74	8.68 U	0.868 U	**4.09**	0.868 U	0.868 U	0.868 U	0.868 U	**1.46**	**1.38**	**1.67**	0.868 U	102 U	49.0 U	**6.21**	0.868 U	8.68 U	1.74 U	0.868 U	0.868 U	0.868 U	0.868 U
	Hexachlorobutadiene	1.1	21.3 U	2.13 U	5.33 U	2.13 U	2.13 U	2.13 U	2.13 U	2.13 U	2.13 U	2.13 U	2.13 U	251 U	120 U	2.13 U	2.13 U	21.3 U	4.26 U	2.13 U	2.13 U	2.13 U	2.13 U
	Methylene chloride	50	17.4 U	1.74 U	4.34 U	1.74 U	1.74 U	1.74 U	1.74 U	1.74 U	1.74 U	1.74 U	1.74 U	205 U	98.0 U	1.74 U	1.74 U	17.4 U	3.47 U	1.74 U	1.74 U	1.74 U	1.74 U
	4-Methyl-2-pentanone	22	8.19 U	0.819 U	**9.43**	0.819 U	**5.19**	0.819 U	**1.44**	**2.96**	0.819 U	0.819 U	0.819 U	96.5 U	46.2 U	**24.2**	0.819 U	8.19 U	1.64 U	**1.31**	0.819 U	**2.04**	**2.83**
	Methyl tert butyl ether	390	7.20 U	0.720 U	1.80 U	0.720 U	0.720 U	0.720 U	0.720 U	0.720 U	0.720 U	0.720 U	0.720 U	84.9 U	40.7 U	0.720 U	0.720 U	7.20 U	1.44 U	0.720 U	0.720 U	0.720 U	0.720 U
	p/m-Xylene	200	17.4 U	1.74 U	**7.83**	1.74 U	**2.03**	1.74 U	1.74 U	**4.67**	**5.22**	**5.55**	**2.63**	205 U	98.0 U	**39.8**	1.74 U	**23.7**	3.47 U	**1.91**	1.74 U	1.74 U	1.74 U
	o-Xylene	200	8.68 U	0.868 U	2.17 U	0.868 U	0.868 U	0.868 U	0.868 U	**1.72**	**2.54**	**2.35**	**0.985**	102 U	49.0 U	**12.8**	0.868 U	**13.5**	1.74 U	0.868 U	0.868 U	0.868 U	0.868 U
	Styrene	14	8.51 U	0.851 U	**3.33**	0.851 U	0.851 U	0.851 U	0.851 U	0.851 U	0.851 U	0.851 U	0.851 U	100 U	48.0 U	0.851 U	0.851 U	8.51 U	1.70 U	0.851 U	0.851 U	0.851 U	0.851 U
	Tetrachloroethene	14	13.6 U	**6.73**	3.39 U	**2.22**	1.36 U	**1.77**	**10.3**	1.36 U	**5.17**	**4.69**	**8.70**	**1,930**	76.5 U	**2.20**	**4.70**	**39.2**	**61.9**	**1.79**	**1.48**	**2.90**	**2.18**
	Tetrahydrofuran	NS	5.89 U	0.589 U	1.47 U	0.589 U	0.589 U	0.589 U	0.589 U	0.589 U	0.589 U	0.589 U	**0.919**	69.5 U	33.3 U	**30.7**	0.589 U	5.89 U	1.18 U	0.589 U	0.589 U	0.589 U	0.589 U
	Toluene	540	**21.6**	0.753 U	**21.3**	0.753 U	**2.97**	0.753 U	**0.764**	**4.95**	**3.12**	**3.92**	**2.49**	88.8 U	42.5 U	**17.6**	**0.764**	7.53 U	1.51 U	**2.57**	**1.19**	**0.761**	**3.67**
	trans-1,2-Dichloroethene	8	7.92 U	0.792 U	1.98 U	0.792 U	0.792 U	0.792 U	0.792 U	0.792 U	0.792 U	0.792 U	0.792 U	**33,400**	**39,400**	0.792 U	0.792 U	7.92 U	1.58 U	0.792 U	0.792 U	0.792 U	0.792 U
	trans-1,3-Dichloropropene	6	9.07 U	0.907 U	2.27 U	0.907 U	0.907 U	0.907 U	0.907 U	0.907 U	0.907 U	0.907 U	0.907 U	107 U	51.2 U	0.907 U	0.907 U	9.07 U	1.81 U	0.907 U	0.907 U	0.907 U	0.907 U
	Trichloroethene	8	**22.6**	**2.06**	**15.0**	1.07 U	1.07 U	1.07 U	1.07 U	**7.61**	1.07 U	1.07 U	**1.35**	**3,120**	**3,600**	1.07 U	1.07 U	10.7 U	2.15 U	1.07 U	1.07 U	1.07 U	1.07 U
	Trichlorofluoromethane	NS	11.2 U	**1.84**	2.81 U	**1.53**	**1.21**	**1.46**	1.12 U	**1.23**	1.12 U	**1.18**	**1.64**	132 U	63.4 U	**1.21**	**1.41**	11.2 U	2.24 U	**1.17**	1.12 U	1.12 U	**1.26**
	Vinyl chloride	2.7	5.11 U	0.511 U	1.28 U	0.511 U	0.511 U	0.511 U	0.511 U	0.511 U	0.511 U	0.511 U	0.511 U	**1,680**	**1,500**	0.511 U	0.511 U	5.11 U	1.02 U	0.511 U	0.511 U	0.511 U	0.511 U
	Naphthalene	6.1	10.5 U	1.05 U	**3.31**	1.05 U	1.05 U	1.05 U	1.05 U	1.05 U	**3.84**	1.05 U	1.05 U	124 U	59.1 U	**3.22**	1.05 U	10.5 U	2.10 U	1.05 U	1.05 U	1.05 U	1.05 U
	1,1,1,2-Tetrachloroethane	NS	13.7 U	1.37 U	3.43 U	1.37 U	1.37 U	1.37 U	1.37 U	1.37 U	1.37 U	1.37 U	1.37 U	162 U	77.4 U	1.37 U	1.37 U	13.7 U	2.74 U	1.37 U	1.37 U	1.37 U	1.37 U
	Isopropylbenzene	100[1]	**198**	0.982 U	**36.0**	0.982 U	**7.45**	0.982 U	0.982 U	0.982 U	0.982 U	0.982 U	0.982 U	116 U	55.4 U	0.982 U	0.982 U	9.82 U	1.96 U	0.982 U	0.982 U	0.982 U	**39.3**
	1,2,3-Trichloropropane	NS	12.0 U	1.20 U	3.01 U	1.20 U	1.20 U	1.20 U	1.20 U	1.20 U	1.20 U	1.20 U	1.20 U	142 U	68.0 U	1.20 U	1.20 U	12.0 U	2.41 U	1.20 U	1.20 U	1.20 U	1.20 U
	Bromobenzene	NS	12.8 U	1.28 U	3.21 U	1.28 U	1.28 U	1.28 U	1.28 U	1.28 U	1.28 U	1.28 U	1.28 U	151 U	72.4 U	1.28 U	1.28 U	12.8 U	2.57 U	1.28 U	1.28 U	1.28 U	1.28 U
	Dibromomethane	NS	14.2 U	1.42 U	3.55 U	1.42 U	1.42 U	1.42 U	1.42 U	1.42 U	1.42 U	1.42 U	1.42 U	168 U	80.2 U	1.42 U	1.42 U	14.2 U	2.84 U	1.42 U	1.42 U	1.42 U	1.42 U
	tert-Amyl Methyl Ether	NS	8.35 U	0.835 U	2.09 U	0.835 U	0.835 U	0.835 U	0.835 U	0.835 U	0.835 U	0.835 U	0.835 U	98.4 U	47.1 U	0.835 U	0.835 U	8.35 U	1.67 U	0.835 U	0.835 U	0.835 U	0.835 U
	2-Chlorotoluene	NS	10.3 U	1.03 U	2.59 U	1.03 U	1.03 U	1.03 U	1.03 U	1.03 U	1.03 U	1.03 U	1.03 U	122 U	58.4 U	1.03 U	1.03 U	10.3 U	2.07 U	1.03 U	1.03 U	1.03 U	1.03 U

Table 6
Summary of Analytical Results for Soil Gas Samples -- 2010
New Bedford High School
New Bedford, Massachusetts

Analysis	Analyte	Sample Location:	PVP-1		PVP-2		PVP-3		PVP-4		PVP-5			PVP-6		PVP-7		PVP-8		TVP-2	TVP-5	TVP-7	TVP-8
		Location Room:	Classroom A-4-115		Classroom A-3-115		Classroom A-3-112		Classroom A-2-115		Classroom A-1-105			Mechanical Room B-114		Wood Shop D-105		Auto Shop D-116		Classroom A-4-105	Classroom A-3-105	Classroom A-2-105	Classroom A-1-115
		Sample ID:	TVP-1	PVP-1	TVP-3	PVP-2	TVP-4	PVP-3	TVP-6	PVP-4	TVP-9		PVP-5	PVP-6		TVP-10	PVP-7	TVP-11	PVP-8	TVP-2	TVP-5	TVP-7	TVP-8
		Sample Date:	2/15/2010	4/20/2010	2/15/2010	4/20/2010	2/15/2010	4/20/2010	2/15/2010	4/20/2010	2/15/2010	2/15/2010 Field Dup	4/20/2010	4/9/2010	4/20/2010	2/15/2010	4/20/2010	2/15/2010	4/20/2010	2/15/2010	2/15/2010	2/15/2010	2/15/2010
		Screening Values*																					
	4-Chlorotoluene	NS	10.3 U	1.03 U	2.59 U	1.03 U	1.03 U	1.03 U	1.03 U	1.03 U	1.03 U	1.03 U	1.03 U	122 U	58.4 U	1.03 U	1.03 U	10.3 U	2.07 U	1.03 U	1.03 U	1.03 U	1.03 U
	2,2-Dichloropropane	NS	9.23 U	0.923 U	2.31 U	0.923 U	0.923 U	0.923 U	0.923 U	0.923 U	0.923 U	0.923 U	0.923 U	109 U	52.1 U	0.923 U	0.923 U	9.23 U	1.85 U	0.923 U	0.923 U	0.923 U	0.923 U
	1,1-Dichloropropene	NS	9.07 U	0.907 U	2.27 U	0.907 U	0.907 U	0.907 U	0.907 U	0.907 U	0.907 U	0.907 U	0.907 U	107 U	51.2 U	0.907 U	0.907 U	9.07 U	1.81 U	0.907 U	0.907 U	0.907 U	0.907 U
	Diisopropyl ether	NS	8.35 U	0.835 U	2.09 U	0.835 U	0.835 U	0.835 U	0.835 U	0.835 U	0.835 U	0.835 U	0.835 U	98.4 U	47.1 U	0.835 U	0.835 U	8.35 U	1.67 U	0.835 U	0.835 U	0.835 U	0.835 U
	tert-Butyl Ethyl Ether	NS	8.35 U	0.835 U	2.09 U	0.835 U	0.835 U	0.835 U	0.835 U	0.835 U	0.835 U	0.835 U	0.835 U	98.5 U	47.2 U	0.835 U	0.835 U	8.35 U	1.67 U	0.835 U	0.835 U	0.835 U	0.835 U
	1,2,3-Trichlorobenzene	NS	14.8 U	1.48 U	3.71 U	1.48 U	1.48 U	1.48 U	1.48 U	1.48 U	1.48 U	1.48 U	1.48 U	175 U	83.7 U	1.48 U	1.48 U	14.8 U	2.97 U	1.48 U	1.48 U	1.48 U	1.48 U
	Ethyl ether	NS	6.06 U	0.606 U	1.51 U	0.606 U	0.606 U	0.606 U	0.606 U	0.606 U	0.606 U	0.606 U	0.606 U	71.4 U	34.2 U	0.606 U	0.606 U	6.06 U	1.21 U	0.606 U	0.606 U	0.606 U	0.606 U
	n-Butylbenzene	100(1)	11.0 U	1.10 U	2.74 U	1.10 U	1.10 U	1.10 U	1.10 U	1.10 U	1.10 U	1.10 U	1.10 U	129 U	61.9 U	**1.71**	1.10 U	11.0 U	2.19 U	1.10 U	1.10 U	1.10 U	1.10 U
	sec-Butylbenzene	100(1)	11.0 U	1.10 U	2.74 U	1.10 U	1.10 U	1.10 U	1.10 U	1.10 U	1.10 U	1.10 U	1.10 U	129 U	61.9 U	1.10 U	1.10 U	11.0 U	2.19 U	1.10 U	1.10 U	1.10 U	1.10 U
	tert-Butylbenzene	100(1)	11.0 U	1.10 U	2.74 U	1.10 U	1.10 U	1.10 U	1.10 U	1.10 U	1.10 U	1.10 U	1.10 U	129 U	61.9 U	**1.91**	1.10 U	11.0 U	2.19 U	1.10 U	1.10 U	1.10 U	**3.66**
	1,2-Dibromo-3-chloropropane	NS	19.3 U	1.93 U	4.83 U	1.93 U	1.93 U	1.93 U	1.93 U	1.93 U	1.93 U	1.93 U	1.93 U	228 U	109 U	1.93 U	1.93 U	19.3 U	3.86 U	1.93 U	1.93 U	1.93 U	1.93 U
	p-Isopropyltoluene	100(1)	11.0 U	1.10 U	2.74 U	1.10 U	1.10 U	1.10 U	1.10 U	1.10 U	1.10 U	1.10 U	1.10 U	129 U	61.9 U	1.10 U	1.10 U	11.0 U	2.19 U	1.10 U	1.10 U	1.10 U	1.10 U
	n-Propylbenzene	100(1)	9.82 U	0.982 U	2.46 U	0.982 U	0.982 U	0.982 U	0.982 U	0.982 U	0.982 U	0.982 U	0.982 U	116 U	55.4 U	**1.85**	0.982 U	9.82 U	1.96 U	0.982 U	0.982 U	0.982 U	0.982 U
	1,3-Dichloropropane	NS	9.23 U	0.923 U	2.31 U	0.923 U	0.923 U	0.923 U	0.923 U	0.923 U	0.923 U	0.923 U	0.923 U	109 U	52.1 U	0.923 U	0.923 U	9.23 U	1.85 U	0.923 U	0.923 U	0.923 U	0.923 U

Notes:
ug/m3 - micrograms per cubic meters.
NS - No MassDEP standards exist for this compound.
U - Compound was not detected at specified quantitation limit.
Values in Bold indicate the compound was detected.
Values shown in Bold and shaded type exceed the screening value.
TO - Toxic organics.
(1) - IATV for C9-C10 aromatics used.
* - Soil Gas Screening Values are based on the MassDEP, Draft Indoor Air Threshold Values (IATV), June 26, 2008 and multiplied by 10, which represents a conservative soil gas to indoor air dilution attenuation factor.

Table 7
Groundwater Elevations
New Bedford High School
New Bedford, Massachusetts

Well Location	Ground/Floor Elevation	Reference Elevation [1]	February 2010			April 2010			May 2010		
			Gauging Date	Depth to Water [2]	Groundwater Elevation	Gauging Date	Depth to Water [2]	Groundwater Elevation	Gauging Date	Depth to Water [2]	Groundwater Elevation
MW-4	84.68	84.53	2/17/2010	1.97	82.56	4/9/2010	0.89	83.64	5/17/2010	2.20	82.33
MW-5	84.71	84.55	2/17/2010	1.95	82.60	4/7/2010	1.43	83.12	5/17/2010	2.02	82.53
MW-6 [3]	84.74	84.59	2/17/2010	1.54	83.05	4/9/2010	0.67	83.92	5/17/2010	1.70	82.89
MW-7	91.38	91.10	2/17/2010	8.67	82.43	4/7/2010	7.14	83.96	5/17/2010	8.85	82.25
MW-8A	89.57	89.35	2/17/2010	4.11	85.24	4/7/2010	2.56	86.79	5/17/2010	4.48	84.87
MW-8B [4]	89.59	89.50	NM	NM	NM	4/7/2010	2.71	86.79	5/17/2010	4.60	84.90
MW-11	83.97	83.86	2/17/2010	0.29	83.57	4/7/2010	0.00	83.86	5/17/2010	1.47	82.39
MW-12	89.70	89.37	2/17/2010	6.39	82.98	4/7/2010	5.06	84.31	5/17/2010	6.56	82.81
MW-13	84.23	83.87	2/17/2010	0.90	82.97	4/7/2010	0.12	83.75	5/17/2010	1.10	82.77
MW-14	84.02	83.64	2/17/2010	0.48	83.16	4/7/2010	0.08	83.56	5/17/2010	0.67	82.97
MW-15	89.47	89.23	2/17/2010	5.94	83.29	4/7/2010	5.28	83.95	5/17/2010	6.11	83.12
MW-16	84.12	83.85	2/19/2010	1.00	82.85	4/7/2010	1.06	82.79	5/17/2010	0.86	82.99
MW-17	89.88	89.67	2/17/2010	6.71	82.96	4/7/2010	5.86	83.81	5/17/2010	6.88	82.79
MW-18	84.28	84.09	2/17/2010	0.36	83.73	4/7/2010	0.85	83.24	5/17/2010	1.50	82.59
MW-19	88.76	88.58	2/17/2010	6.26	82.32	4/7/2010	4.59	83.99	5/17/2010	6.50	82.08
MW-20	95.78	95.4	NA	NA	NA	4/7/2010	12.12	83.28	5/17/2010	13.52	81.88
MW-21	92.56	92.22	NA	NA	NA	4/7/2010	8.27	83.95	5/17/2010	9.71	82.51
MW-22	90.85	90.46	NA	NA	NA	4/7/2010	6.43	84.03	5/17/2010	8.03	82.43
MW-23	89.42	89.12	NA	NA	NA	4/7/2010	5.21	83.91	5/17/2010	7.21	81.91
MW-24	89.21	88.75	NA	NA	NA	4/7/2010	5.27	83.48	5/17/2010	7.91	80.84
MW-HH-13	88.17	87.85	2/18/2010	4.35	83.50	4/7/2010	3.52	84.33	5/17/2010	4.48	83.37
MW-HRC-33	86.26	86.09	2/17/2010	3.88	82.21	4/7/2010	2.65	83.44	5/17/2010	4.41	81.68

NOTES:

(1) - Survey of top of PVC riser.

(2) - Measure from top of PVC riser.

(3) - Approximate riser elevation (no survey data) assumed to be 0.15-feet below floor elevation.

(4) - 1-inch diameter well located immediately adjacent to MW-8A.

NM - Not measured.

NA - Not available.

FIGURES

TRC
650 Suffolk St.
Wannalancit Mills
Lowell, MA 01854

FIGURE 1
SITE AERIAL PHOTOGRAPH
New Bedford High School
NEW BEDFORD, MASSACHUSETTS

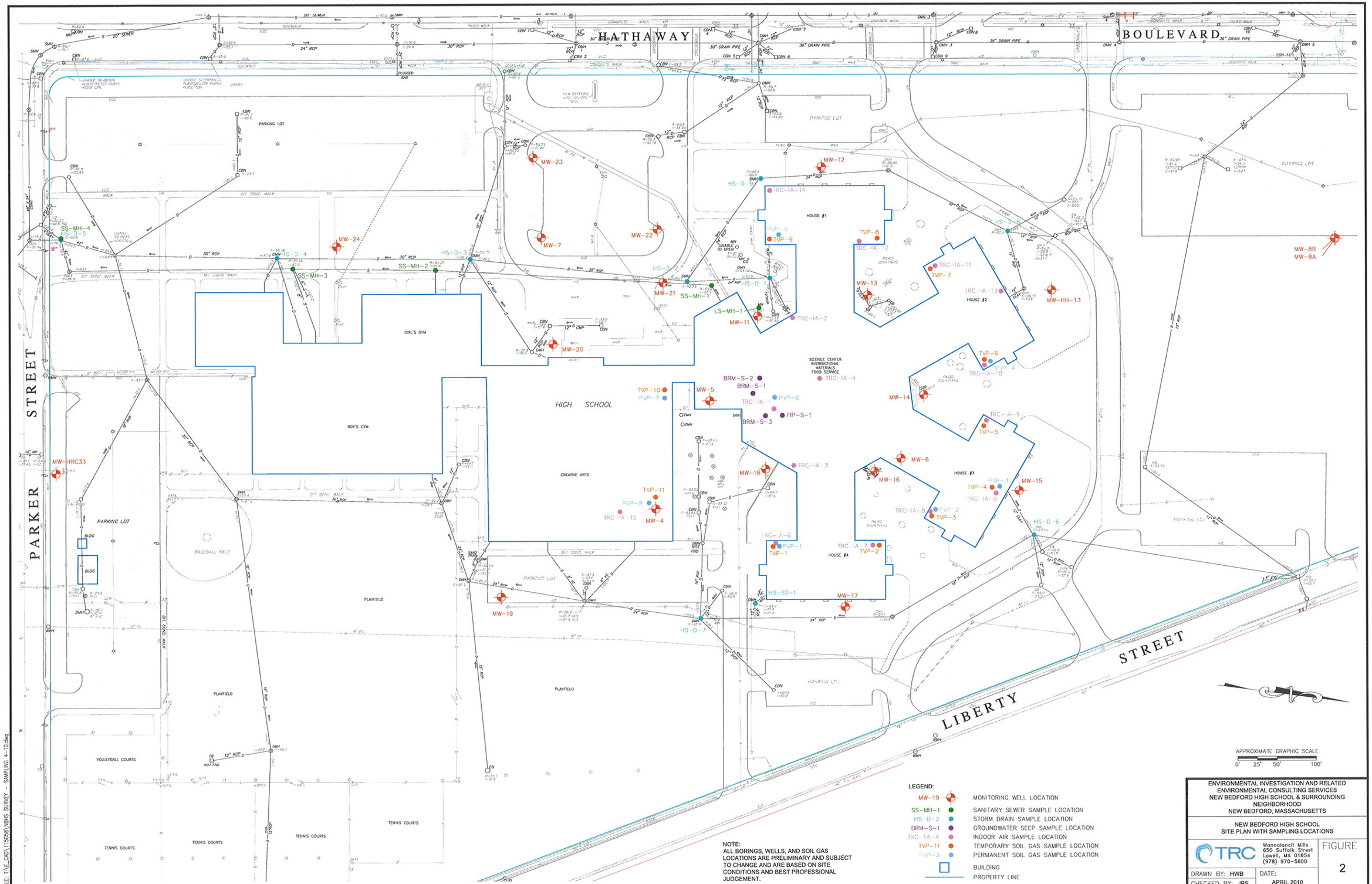
HATHAWAY
BOULEVARD
PARKER
STREET
LIBERTY
STREET
HIGH SCHOOL
GIRL'S GYM
BOY'S GYM
CREATIVE ARTS
SCIENCE CENTER
INSTRUCTIONAL
MATERIALS
FOOD SERVICE
HOUSE #1
HOUSE #2
HOUSE #3
HOUSE #4
PARKING LOT
BASEBALL FIELD
PLAYFIELD
VOLLEYBALL COURTS
TENNIS COURTS
MW-19
MW-20
MW-21
MW-22
MW-23
MW-24
MW-7
MW-11
MW-12
MW-13
MW-14
MW-15
MW-16
MW-17
MW-18
MW-5
MW-6
MW-4
MW-HH-13
MW-8B
MW-8A
MW-HRC33
SS-MH-1
SS-MH-2
SS-MH-3
SS-MH-4
HS-D-1
HS-D-2
HS-D-3
HS-D-4
HS-D-5
HS-D-6
HS-D-7
HS-D-8
HS-D-9
HS-ST-1
LS-MH-1
TRC-IA-1
TRC-IA-2
TRC-IA-3
TRC-IA-4
TRC-IA-5
TRC-IA-6
TRC-IA-7
TRC-IA-8
TRC-IA-9
TRC-IA-10
TRC-IA-11
TRC-IA-12
TRC-IA-13
TRC-IA-14
TRC-IA-15
TVP-1
TVP-2
TVP-3
TVP-4
TVP-5
TVP-6
TVP-7
TVP-8
TVP-9
TVP-10
TVP-11
PVP-1
PVP-2
PVP-3
PVP-4
PVP-5
PVP-6
PVP-7
PVP-8
BRM-S-1
BRM-S-2
BRM-S-3
FIP-S-1
APPROXIMATE GRAPHIC SCALE
0' 25' 50' 100'
LEGEND:
MW-19 MONITORING WELL LOCATION
SS-MH-1 SANITARY SEWER SAMPLE LOCATION
HS-D-2 STORM DRAIN SAMPLE LOCATION
BRM-S-1 GROUNDWATER SEEP SAMPLE LOCATION
TRC-IA-4 INDOOR AIR SAMPLE LOCATION
TVP-11 TEMPORARY SOIL GAS SAMPLE LOCATION
PVP-3 PERMANENT SOIL GAS SAMPLE LOCATION
BUILDING
PROPERTY LINE
NOTE:
ALL BORINGS, WELLS, AND SOIL GAS LOCATIONS ARE PRELIMINARY AND SUBJECT TO CHANGE AND ARE BASED ON SITE CONDITIONS AND BEST PROFESSIONAL JUDGEMENT.
ENVIRONMENTAL INVESTIGATION AND RELATED ENVIRONMENTAL CONSULTING SERVICES
NEW BEDFORD HIGH SCHOOL & SURROUNDING NEIGHBORHOOD
NEW BEDFORD, MASSACHUSETTS
NEW BEDFORD HIGH SCHOOL
SITE PLAN WITH SAMPLING LOCATIONS
TRC
Wannalancit Mills
650 Suffolk Street
Lowell, MA 01854
(978) 970-5600
FIGURE
2
DRAWN BY: HWB
DATE:
APRIL 2010
CHECKED BY: JBS
FILE: T:\E_CAD\115058\NBHS SURVEY - SAMPLING 4-10.dwg

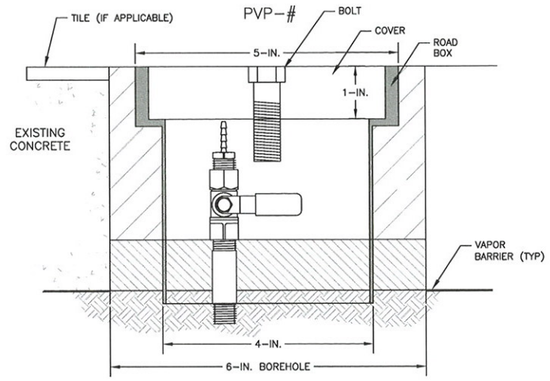

STANDARD EQUIPMENT/INSTALLATION DETAIL

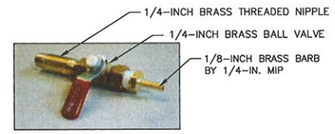

BRASS VALVE DETAIL

LEGEND:

- GROUT/PORTLAND CEMENT MIX
- HYDRAULIC CEMENT
- NATIVE SOIL

PVP-1

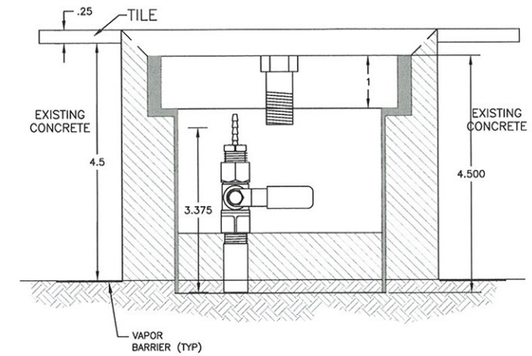

PVP-2

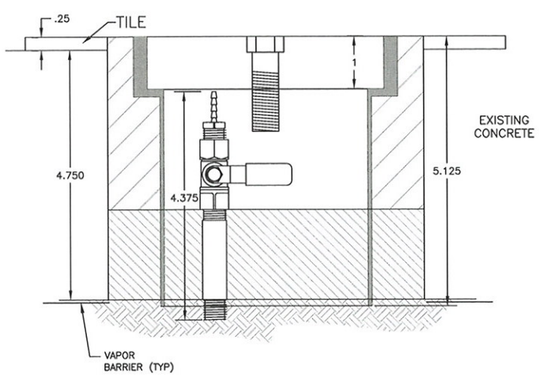

PVP-3

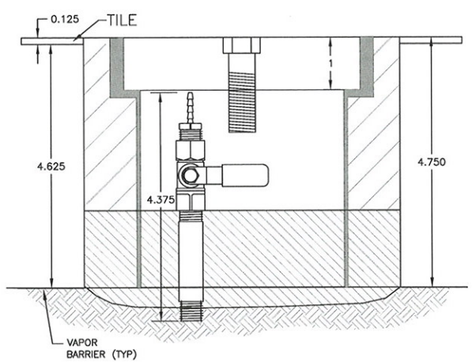

PVP-4

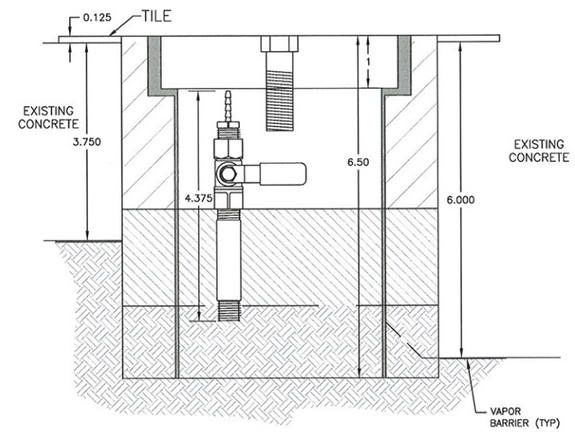

PVP-5

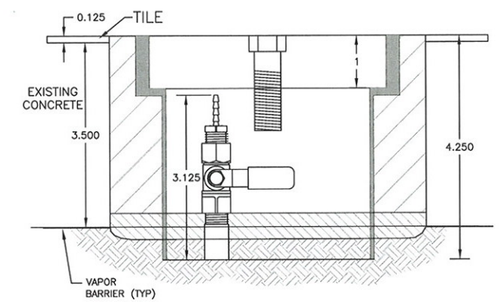

PVP-6

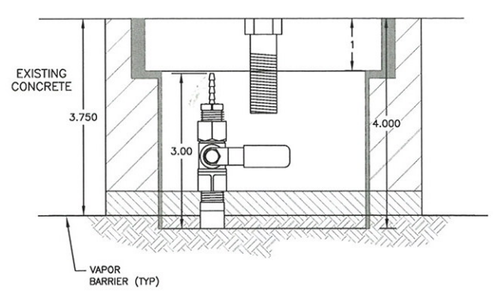

PVP-7

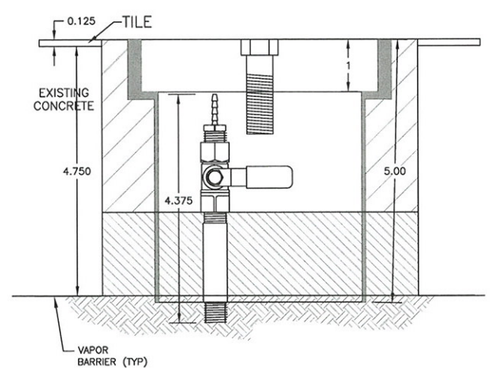

PVP-8

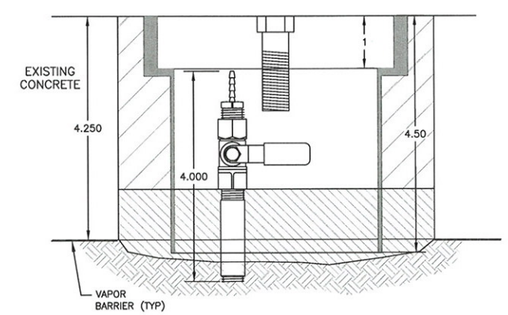

NOT TO SCALE
MEASUREMENTS ARE IN INCHES

NEW BEDFORD HIGH SCHOOL
NEW BEDFORD, MASSACHUSETTS

PERMANENT SOIL GAS SAMPLING POINTS
INSTALLATION DETAILS

TRC
Wannalancit Mills
650 Suffolk Street
Lowell, MA 01854
(978) 970-5600

DRAWN BY: MAN
CHECKED BY: JSG
DATE: MARCH 2010

FIGURE 3

FILE: T:\E_CAD\115058\NBHS\SOIL VAPOR PNTstd.dwg

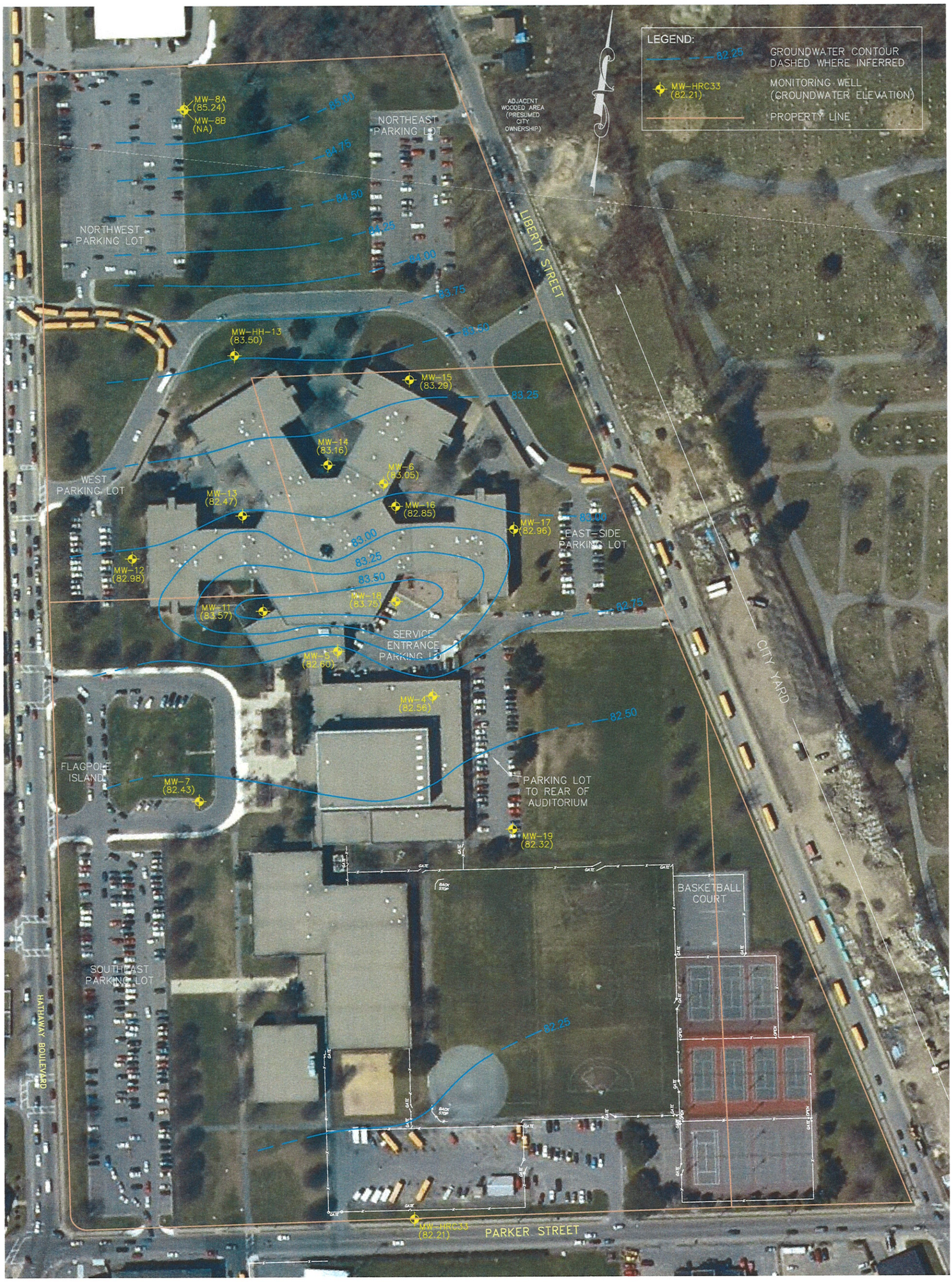

APPROXIMATE GRAPHIC SCALE

0' 150' 300'

NOTE:
ALL BORINGS, WELLS, AND SOIL GAS LOCATIONS ARE PRELIMINARY AND SUBJECT TO CHANGE AND ARE BASED ON SITE CONDITIONS AND BEST PROFESSIONAL JUDGEMENT.

ENVIRONMENTAL INVESTIGATION AND RELATED ENVIRONMENTAL CONSULTING SERVICES
NEW BEDFORD HIGH SCHOOL & SURROUNDING NEIGHBORHOOD
NEW BEDFORD, MASSACHUSETTS

NEW BEDFORD HIGH SCHOOL
ESTIMATED GROUNDWATER CONTOUR MAP (FEB 17, 2010)

TRC
Wannalancit Mills
650 Suffolk Street
Lowell, MA 01854
(978) 970-5600

FIGURE 4

DRAWN BY: HWB
CHECKED BY: JBS
DATE: FEB 25, 2010

FILE: T:\E_CAD\115058\NBHS GW MW 2-25-10.dwg

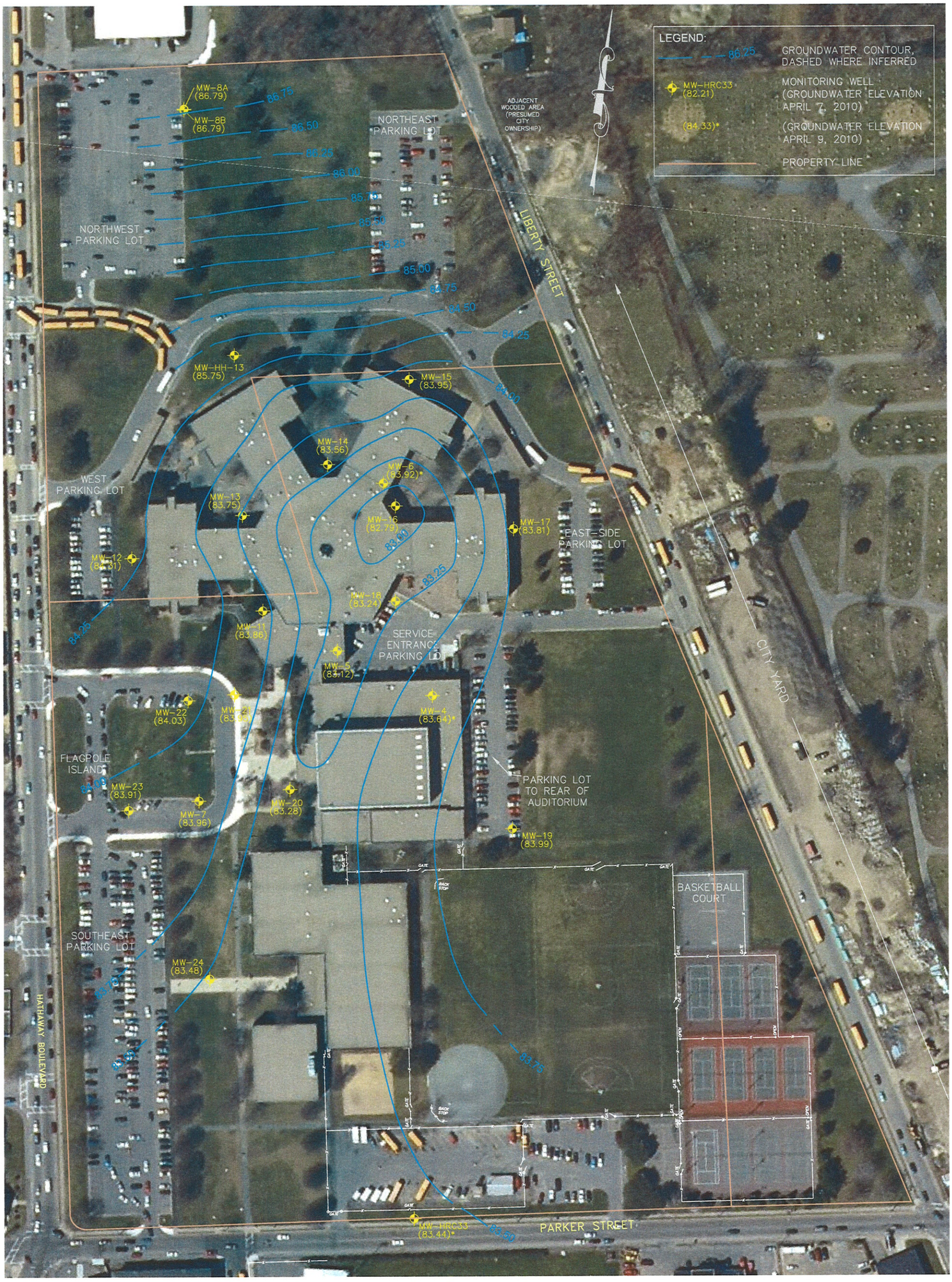

APPROXIMATE GRAPHIC SCALE

0' 150' 300'

NOTE:
ALL BORINGS, WELLS, AND SOIL GAS LOCATIONS ARE PRELIMINARY AND SUBJECT TO CHANGE AND ARE BASED ON SITE CONDITIONS AND BEST PROFESSIONAL JUDGEMENT.

ENVIRONMENTAL INVESTIGATION AND RELATED ENVIRONMENTAL CONSULTING SERVICES
NEW BEDFORD HIGH SCHOOL & SURROUNDING NEIGHBORHOOD
NEW BEDFORD, MASSACHUSETTS

NEW BEDFORD HIGH SCHOOL
ESTIMATED GROUNDWATER CONTOUR MAP (APR 7, 2010)

TRC
Wannalancit Mills
650 Suffolk Street
Lowell, MA 01854
(978) 970-5600

FIGURE 5

DRAWN BY: HWB
CHECKED BY: JBS
DATE: APR 13, 2010

FILE: T:\E_CAD\115058\NBHS GW MW 4-13-10.dwg

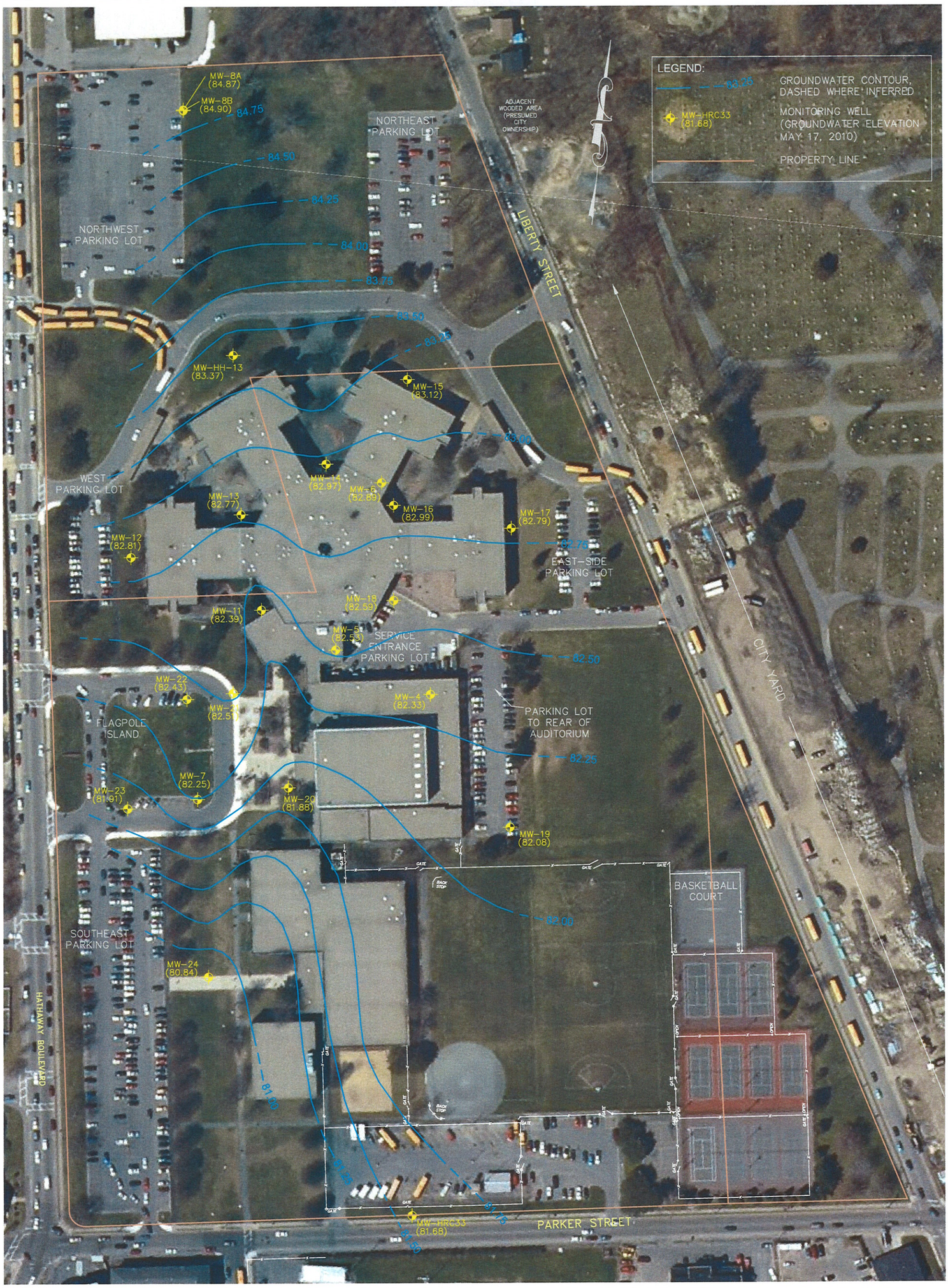

APPROXIMATE GRAPHIC SCALE

0' 150' 300'

NOTE:
ALL BORINGS, WELLS, AND SOIL GAS LOCATIONS ARE PRELIMINARY AND SUBJECT TO CHANGE AND ARE BASED ON SITE CONDITIONS AND BEST PROFESSIONAL JUDGEMENT.

ENVIRONMENTAL INVESTIGATION AND RELATED ENVIRONMENTAL CONSULTING SERVICES
NEW BEDFORD HIGH SCHOOL & SURROUNDING NEIGHBORHOOD
NEW BEDFORD, MASSACHUSETTS

NEW BEDFORD HIGH SCHOOL
ESTIMATED GROUNDWATER CONTOUR MAP (MAY 17, 2010)

TRC
Wannalancit Mills
650 Suffolk Street
Lowell, MA 01854
(978) 970-5600

FIGURE 6

DRAWN BY: HWB
CHECKED BY: JBS
DATE: MAY 19, 2010

FILE: T:\E_CAD\115058\NBHS GW MW 5-19-10.dwg

APPENDIX A

LABORATORY DATA REPORTS

INDOOR AIR & SOIL GAS

ALPHA ANALYTICAL

ANALYTICAL REPORT

Lab Number:	L1005130
Client:	TRC Environmental Consultants Wannalancit Mills 650 Suffolk Street Lowell, MA 01854
ATTN:	David Sullivan
Phone:	(978) 656-3565
Project Name:	CITY OF NB
Project Number:	115058
Report Date:	04/30/10

Certifications & Approvals: MA (M-MA030), NY (11627), CT (PH-0141), NH (2206), NJ (MA015), RI (LAO00299), ME (MA0030), PA (Registration #68-02089), LA NELAC (03090), FL NELAC (E87814), US Army Corps of Engineers.

320 Forbes Boulevard, Mansfield, MA 02048-1806
508-822-9300 (Fax) 508-822-3288 800-624-9220 - www.alphalab.com

Project Name: CITY OF NB
Project Number: 115058

Lab Number: L1005130
Report Date: 04/30/10

Alpha Sample ID	Client ID	Sample Location	Collection Date/Time
L1005130-01	PVP-6	NBHS	04/09/10 12:06

Project Name: CITY OF NB
Project Number: 115058

Lab Number: L1005130
Report Date: 04/30/10

Case Narrative

The samples were received in accordance with the Chain of Custody and no significant deviations were encountered during the preparation or analysis unless otherwise noted. Sample Receipt, Container Information, and the Chain of Custody are located at the back of the report.

Results contained within this report relate only to the samples submitted under this Alpha Lab Number and meet all of the requirements of NELAC, for all NELAC accredited parameters. The data presented in this report is organized by parameter (i.e. VOC, SVOC, etc.). Sample specific Quality Control data (i.e. Surrogate Spike Recovery) is reported at the end of the target analyte list for each individual sample, followed by the Laboratory Batch Quality Control at the end of each parameter. If a sample was re-analyzed or re-extracted due to a required quality control corrective action and if both sets of data are reported, the Laboratory ID of the re-analysis or re-extraction is designated with an "R" or "RE", respectively. When multiple Batch Quality Control elements are reported (e.g. more than one LCS), the associated samples for each element are noted in the grey shaded header line of each data table. Any Laboratory Batch, Sample Specific % recovery or RPD value that is outside the listed Acceptance Criteria is bolded in the report. Definitions of all data qualifiers and acronyms used in this report are provided in the Glossary located at the back of the report.

Please see the associated ADEx data file for a comparison of laboratory reporting limits that were achieved with the regulatory Numerical Standards requested on the Chain of Custody.

For additional information, please contact Client Services at 800-624-9220.

Report Submission

This report replaces the report issued on April 15, 2010. The client sample identification has been amended per client request.

Volatile Organics in Air (Low Level)

L1005130-01 has elevated detection limits due to the dilution required by the elevated concentrations of target compounds in the sample.

I, the undersigned, attest under the pains and penalties of perjury that, to the best of my knowledge and belief and based upon my personal inquiry of those responsible for providing the information contained in this analytical report, such information is accurate and complete. This certificate of analysis is not complete unless this page accompanies any and all pages of this report.

Authorized Signature: Kathleen M. O'Brien Kathleen O'Brien

Title: Technical Director/Representative

Date: 04/30/10

AIR

Project Name:	CITY OF NB	**Lab Number:**	L1005130
Project Number:	115058	**Report Date:**	04/30/10

SAMPLE RESULTS

Lab ID:	L1005130-01 D	Date Collected:	04/09/10 12:06
Client ID:	PVP-6	Date Received:	04/09/10
Sample Location:	NBHS	Field Prep:	Not Specified
Matrix:	Soil_Vapor		
Anaytical Method:	48,TO-15		
Analytical Date:	04/11/10 08:35		
Analyst:	AJ		

Parameter	ppbV Results	ppbV RDL	ug/m3 Results	ug/m3 RDL	Qualifier	Dilution Factor
Volatile Organics in Air (Low Level) - Mansfield Lab						
1,1,1-Trichloroethane	ND	23.6	ND	128.		117.9
1,1,2,2-Tetrachloroethane	ND	23.6	ND	162.		117.9
1,1,2-Trichloroethane	ND	23.6	ND	128.		117.9
1,1-Dichloroethane	ND	23.6	ND	95.4		117.9
1,1-Dichloroethene	41.1	23.6	163	93.4		117.9
1,2,4-Trichlorobenzene	ND	23.6	ND	175.		117.9
1,2,4-Trimethylbenzene	ND	23.6	ND	116.		117.9
1,2-Dibromoethane	ND	23.6	ND	181.		117.9
1,2-Dichlorobenzene	ND	23.6	ND	142.		117.9
1,2-Dichloroethane	ND	23.6	ND	95.4		117.9
1,2-Dichloropropane	ND	23.6	ND	109.		117.9
1,3,5-Trimethybenzene	ND	23.6	ND	116.		117.9
1,3-Dichlorobenzene	ND	23.6	ND	142.		117.9
1,4-Dichlorobenzene	ND	23.6	ND	142.		117.9
1,4-Dioxane	ND	23.6	ND	84.9		117.9
2-Butanone	ND	23.6	ND	69.5		117.9
2-Hexanone	ND	23.6	ND	96.5		117.9
Acetone	ND	118	ND	280		117.9
Benzene	ND	23.6	ND	75.3		117.9
Bromodichloromethane	ND	23.6	ND	158.		117.9
Bromoform	ND	23.6	ND	244.		117.9
Bromomethane	ND	23.6	ND	91.5		117.9
Carbon disulfide	ND	23.6	ND	73.4		117.9
Carbon tetrachloride	ND	23.6	ND	148.		117.9
Chlorobenzene	ND	23.6	ND	108.		117.9

Project Name: CITY OF NB
Project Number: 115058

Lab Number: L1005130
Report Date: 04/30/10

SAMPLE RESULTS

Lab ID: L1005130-01 D
Client ID: PVP-6
Sample Location: NBHS

Date Collected: 04/09/10 12:06
Date Received: 04/09/10
Field Prep: Not Specified

Parameter	ppbV Results	ppbV RDL	ug/m3 Results	ug/m3 RDL	Qualifier	Dilution Factor
Volatile Organics in Air (Low Level) - Mansfield Lab						
Chloroethane	ND	23.6	ND	62.2		117.9
Chloroform	ND	23.6	ND	115.		117.9
Chloromethane	ND	23.6	ND	48.6		117.9
cis-1,2-Dichloroethene	320	23.6	1270	93.4		117.9
cis-1,3-Dichloropropene	ND	23.6	ND	107.		117.9
Dibromochloromethane	ND	23.6	ND	201.		117.9
Dichlorodifluoromethane	ND	23.6	ND	116.		117.9
Ethylbenzene	ND	23.6	ND	102.		117.9
Hexachlorobutadiene	ND	23.6	ND	251.		117.9
Methylene chloride	ND	59.0	ND	205		117.9
4-Methyl-2-pentanone	ND	23.6	ND	96.5		117.9
Methyl tert butyl ether	ND	23.6	ND	84.9		117.9
p/m-Xylene	ND	47.2	ND	205.		117.9
o-Xylene	ND	23.6	ND	102.		117.9
Styrene	ND	23.6	ND	100.		117.9
Tetrachloroethene	285	23.6	1930	160		117.9
Tetrahydrofuran	ND	23.6	ND	69.5		117.9
Toluene	ND	23.6	ND	88.8		117.9
trans-1,2-Dichloroethene	8440	23.6	33400	93.4		117.9
trans-1,3-Dichloropropene	ND	23.6	ND	107.		117.9
Trichloroethene	582	23.6	3120	127		117.9
Trichlorofluoromethane	ND	23.6	ND	132.		117.9
Vinyl chloride	659	23.6	1680	60.2		117.9
Naphthalene	ND	23.6	ND	124.		117.9
1,1,1,2-Tetrachloroethane	ND	23.6	ND	162.		117.9
Isopropylbenzene	ND	23.6	ND	116.		117.9
1,2,3-Trichloropropane	ND	23.6	ND	142.		117.9
Bromobenzene	ND	23.6	ND	151.		117.9

Project Name:	CITY OF NB	**Lab Number:**	L1005130
Project Number:	115058	**Report Date:**	04/30/10

SAMPLE RESULTS

Lab ID:	L1005130-01 D	Date Collected:	04/09/10 12:06
Client ID:	PVP-6	Date Received:	04/09/10
Sample Location:	NBHS	Field Prep:	Not Specified

	ppbV		ug/m3			
Parameter	**Results**	**RDL**	**Results**	**RDL**	**Qualifier**	**Dilution Factor**
Volatile Organics in Air (Low Level) - Mansfield Lab						
Dibromomethane	ND	23.6	ND	168.		117.9
tert-Amyl Methyl Ether	ND	23.6	ND	98.4		117.9
2-Chlorotoluene	ND	23.6	ND	122.		117.9
4-Chlorotoluene	ND	23.6	ND	122.		117.9
2,2-Dichloropropane	ND	23.6	ND	109.		117.9
1,1-Dichloropropene	ND	23.6	ND	107.		117.9
Diisopropyl ether	ND	23.6	ND	98.4		117.9
tert-Butyl Ethyl Ether	ND	23.6	ND	98.5		117.9
1,2,3-Trichlorobenzene	ND	23.6	ND	175.		117.9
Ethyl ether	ND	23.6	ND	71.4		117.9
n-Butylbenzene	ND	23.6	ND	129.		117.9
sec-Butylbenzene	ND	23.6	ND	129.		117.9
tert-Butylbenzene	ND	23.6	ND	129.		117.9
1,2-Dibromo-3-chloropropane	ND	23.6	ND	228.		117.9
p-Isopropyltoluene	ND	23.6	ND	129.		117.9
n-Propylbenzene	ND	23.6	ND	116.		117.9
1,3-Dichloropropane	ND	23.6	ND	109.		117.9

Project Name: CITY OF NB
Project Number: 115058

Lab Number: L1005130
Report Date: 04/30/10

Method Blank Analysis
Batch Quality Control

Analytical Method: 48,TO-15
Analytical Date: 04/10/10 12:39

Parameter	ppbV Results	ppbV RDL	ug/m3 Results	ug/m3 RDL	Qualifier	Dilution Factor
Volatile Organics in Air (Low Level) - Mansfield Lab for sample(s): 01 Batch: WG407572-4						
1,1,1-Trichloroethane	ND	0.200	ND	1.09		1
1,1,2,2-Tetrachloroethane	ND	0.200	ND	1.37		1
1,1,2-Trichloroethane	ND	0.200	ND	1.09		1
1,1-Dichloroethane	ND	0.200	ND	0.809		1
1,1-Dichloroethene	ND	0.200	ND	0.792		1
1,2,4-Trichlorobenzene	ND	0.200	ND	1.48		1
1,2,4-Trimethylbenzene	ND	0.200	ND	0.982		1
1,2-Dibromoethane	ND	0.200	ND	1.54		1
1,2-Dichlorobenzene	ND	0.200	ND	1.20		1
1,2-Dichloroethane	ND	0.200	ND	0.809		1
1,2-Dichloropropane	ND	0.200	ND	0.924		1
1,3,5-Trimethybenzene	ND	0.200	ND	0.982		1
1,3-Dichlorobenzene	ND	0.200	ND	1.20		1
1,4-Dichlorobenzene	ND	0.200	ND	1.20		1
1,4-Dioxane	ND	0.200	ND	0.720		1
2-Butanone	ND	0.200	ND	0.589		1
2-Hexanone	ND	0.200	ND	0.819		1
Acetone	ND	1.00	ND	2.37		1
Benzene	ND	0.200	ND	0.638		1
Bromodichloromethane	ND	0.200	ND	1.34		1
Bromoform	ND	0.200	ND	2.06		1
Bromomethane	ND	0.200	ND	0.776		1
Carbon disulfide	ND	0.200	ND	0.622		1
Carbon tetrachloride	ND	0.200	ND	1.26		1
Chlorobenzene	ND	0.200	ND	0.920		1

Project Name: CITY OF NB
Project Number: 115058

Lab Number: L1005130
Report Date: 04/30/10

Method Blank Analysis
Batch Quality Control

Analytical Method: 48,TO-15
Analytical Date: 04/10/10 12:39

Parameter	ppbV Results	ppbV RDL	ug/m3 Results	ug/m3 RDL	Qualifier	Dilution Factor
Volatile Organics in Air (Low Level) - Mansfield Lab for sample(s): 01 Batch: WG407572-4						
Chloroethane	ND	0.200	ND	0.527		1
Chloroform	ND	0.200	ND	0.976		1
Chloromethane	ND	0.200	ND	0.413		1
cis-1,2-Dichloroethene	ND	0.200	ND	0.792		1
cis-1,3-Dichloropropene	ND	0.200	ND	0.907		1
Dibromochloromethane	ND	0.200	ND	1.70		1
Dichlorodifluoromethane	ND	0.200	ND	0.988		1
Ethylbenzene	ND	0.200	ND	0.868		1
Hexachlorobutadiene	ND	0.200	ND	2.13		1
Methylene chloride	ND	0.500	ND	1.74		1
4-Methyl-2-pentanone	ND	0.200	ND	0.819		1
Methyl tert butyl ether	ND	0.200	ND	0.720		1
p/m-Xylene	ND	0.400	ND	1.74		1
o-Xylene	ND	0.200	ND	0.868		1
Styrene	ND	0.200	ND	0.851		1
Tetrachloroethene	ND	0.200	ND	1.36		1
Tetrahydrofuran	ND	0.200	ND	0.589		1
Toluene	ND	0.200	ND	0.753		1
trans-1,2-Dichloroethene	ND	0.200	ND	0.792		1
trans-1,3-Dichloropropene	ND	0.200	ND	0.907		1
Trichloroethene	ND	0.200	ND	1.07		1
Trichlorofluoromethane	ND	0.200	ND	1.12		1
Vinyl chloride	ND	0.200	ND	0.511		1
Naphthalene	ND	0.200	ND	1.05		1
1,1,1,2-Tetrachloroethane	ND	0.200	ND	1.37		1

Project Name: CITY OF NB
Project Number: 115058

Lab Number: L1005130
Report Date: 04/30/10

Method Blank Analysis
Batch Quality Control

Analytical Method: 48,TO-15
Analytical Date: 04/10/10 12:39

Parameter	ppbV Results	ppbV RDL	ug/m3 Results	ug/m3 RDL	Qualifier	Dilution Factor
Volatile Organics in Air (Low Level) - Mansfield Lab for sample(s): 01 Batch: WG407572-4						
Isopropylbenzene	ND	0.200	ND	0.982		1
1,2,3-Trichloropropane	ND	0.200	ND	1.20		1
Bromobenzene	ND	0.200	ND	1.28		1
Dibromomethane	ND	0.200	ND	1.42		1
tert-Amyl Methyl Ether	ND	0.200	ND	0.835		1
2-Chlorotoluene	ND	0.200	ND	1.03		1
4-Chlorotoluene	ND	0.200	ND	1.03		1
2,2-Dichloropropane	ND	0.200	ND	0.923		1
1,1-Dichloropropene	ND	0.200	ND	0.907		1
Diisopropyl ether	ND	0.200	ND	0.835		1
tert-Butyl Ethyl Ether	ND	0.200	ND	0.835		1
1,2,3-Trichlorobenzene	ND	0.200	ND	1.48		1
Ethyl ether	ND	0.200	ND	0.606		1
n-Butylbenzene	ND	0.200	ND	1.10		1
sec-Butylbenzene	ND	0.200	ND	1.10		1
tert-Butylbenzene	ND	0.200	ND	1.10		1
1,2-Dibromo-3-chloropropane	ND	0.200	ND	1.93		1
p-Isopropyltoluene	ND	0.200	ND	1.10		1
n-Propylbenzene	ND	0.200	ND	0.982		1
1,3-Dichloropropane	ND	0.200	ND	0.923		1

Lab Control Sample Analysis
Batch Quality Control

Project Name: CITY OF NB
Project Number: 115058

Lab Number: L1005130
Report Date: 04/30/10

Parameter	LCS %Recovery	Qual	LCSD %Recovery	Qual	%Recovery Limits	RPD	Qual	RPD Limits
Volatile Organics in Air (Low Level) - Mansfield Lab Associated sample(s): 01 Batch: WG407572-3								
1,1,1-Trichloroethane	93		-		70-130	-		
1,1,2,2-Tetrachloroethane	107		-		70-130	-		
1,1,2-Trichloroethane	103		-		70-130	-		
1,1-Dichloroethane	88		-		70-130	-		
1,1-Dichloroethene	84		-		70-130	-		
1,2,4-Trichlorobenzene	120		-		70-130	-		
1,2,4-Trimethylbenzene	108		-		70-130	-		
1,2-Dibromoethane	97		-		70-130	-		
1,2-Dichlorobenzene	109		-		70-130	-		
1,2-Dichloroethane	89		-		70-130	-		
1,2-Dichloropropane	96		-		70-130	-		
1,3,5-Trimethylbenzene	100		-		70-130	-		
1,3-Butadiene	90		-		70-130	-		
1,3-Dichlorobenzene	111		-		70-130	-		
1,4-Dichlorobenzene	109		-		70-130	-		
1,4-Dioxane	105		-		70-130	-		
2,2,4-Trimethylpentane	94		-		70-130	-		
2-Butanone	104		-		70-130	-		
2-Hexanone	117		-		70-130	-		
3-Chloropropene	76		-		70-130	-		
4-Ethyltoluene	103		-		70-130	-		

Lab Control Sample Analysis
Batch Quality Control

Project Name: CITY OF NB
Project Number: 115058

Lab Number: L1005130
Report Date: 04/30/10

Parameter	LCS %Recovery	Qual	LCSD %Recovery	Qual	%Recovery Limits	RPD	Qual	RPD Limits
Volatile Organics in Air (Low Level) - Mansfield Lab Associated sample(s): 01 Batch: WG407572-3								
Acetone	111		-		70-130	-		
Benzene	91		-		70-130	-		
Benzyl chloride	99		-		70-130	-		
Bromodichloromethane	94		-		70-130	-		
Bromoform	94		-		70-130	-		
Bromomethane	98		-		70-130	-		
Carbon disulfide	94		-		70-130	-		
Carbon tetrachloride	93		-		70-130	-		
Chlorobenzene	96		-		70-130	-		
Chloroethane	93		-		70-130	-		
Chloroform	94		-		70-130	-		
Chloromethane	95		-		70-130	-		
cis-1,2-Dichloroethene	85		-		70-130	-		
cis-1,3-Dichloropropene	93		-		70-130	-		
Cyclohexane	88		-		70-130	-		
Dibromochloromethane	93		-		70-130	-		
Dichlorodifluoromethane	101		-		70-130	-		
Ethyl Alcohol	113		-		70-130	-		
Ethyl Acetate	107		-		70-130	-		
Ethylbenzene	92		-		70-130	-		
1,1,2-Trichloro-1,2,2-Trifluoroethane	96		-		70-130	-		

Lab Control Sample Analysis
Batch Quality Control

Project Name: CITY OF NB
Project Number: 115058

Lab Number: L1005130
Report Date: 04/30/10

Parameter	LCS %Recovery	Qual	LCSD %Recovery	Qual	%Recovery Limits	RPD	Qual	RPD Limits
Volatile Organics in Air (Low Level) - Mansfield Lab Associated sample(s): 01 Batch: WG407572-3								
1,2-Dichloro-1,1,2,2-tetrafluoroethane	103		-		70-130	-		
Hexachlorobutadiene	113		-		70-130	-		
iso-Propyl Alcohol	98		-		70-130	-		
Methylene chloride	86		-		70-130	-		
4-Methyl-2-pentanone	118		-		70-130	-		
Methyl tert butyl ether	87		-		70-130	-		
p/m-Xylene	95		-		70-130	-		
o-Xylene	94		-		70-130	-		
Heptane	87		-		70-130	-		
n-Hexane	89		-		70-130	-		
Propylene	84		-		70-130	-		
Styrene	93		-		70-130	-		
Tetrachloroethene	95		-		70-130	-		
Tetrahydrofuran	102		-		70-130	-		
Toluene	91		-		70-130	-		
trans-1,2-Dichloroethene	83		-		70-130	-		
trans-1,3-Dichloropropene	80		-		70-130	-		
Trichloroethene	99		-		70-130	-		
Trichlorofluoromethane	100		-		70-130	-		
Vinyl acetate	92		-		70-130	-		
Vinyl bromide	98		-		70-130	-		

Lab Control Sample Analysis
Batch Quality Control

Project Name: CITY OF NB
Project Number: 115058

Lab Number: L1005130
Report Date: 04/30/10

Parameter	LCS %Recovery	Qual	LCSD %Recovery	Qual	%Recovery Limits	RPD	Qual	RPD Limits
Volatile Organics in Air (Low Level) - Mansfield Lab Associated sample(s): 01 Batch: WG407572-3								
Vinyl chloride	96		-		70-130	-		
Naphthalene	112		-		70-130	-		
Propane	91		-		70-130	-		
Acrylonitrile	84		-		70-130	-		
Acrolein	87		-		70-130	-		
1,1,1,2-Tetrachloroethane	93		-		70-130	-		
Isopropylbenzene	97		-		70-130	-		
1,2,3-Trichloropropane	101		-		70-130	-		
Acetonitrile	101		-		70-130	-		
Bromobenzene	97		-		70-130	-		
Chlorodifluoromethane	85		-		70-130	-		
Dichlorofluoromethane	88		-		70-130	-		
Dibromomethane	94		-		70-130	-		
Pentane	82		-		70-130	-		
Octane	86		-		70-130	-		
Tertiary-Amyl Methyl Ether	91		-		70-130	-		
o-Chlorotoluene	95		-		70-130	-		
p-Chlorotoluene	99		-		70-130	-		
2,2-Dichloropropane	82		-		70-130	-		
1,1-Dichloropropene	87		-		70-130	-		
Isopropyl Ether	98		-		70-130	-		

Lab Control Sample Analysis
Batch Quality Control

Project Name: CITY OF NB
Project Number: 115058

Lab Number: L1005130
Report Date: 04/30/10

Parameter	LCS %Recovery	Qual	LCSD %Recovery	Qual	%Recovery Limits	RPD	Qual	RPD Limits
Volatile Organics in Air (Low Level) - Mansfield Lab Associated sample(s): 01 Batch: WG407572-3								
Ethyl-Tert-Butyl-Ether	96		-		70-130	-		
1,2,3-Trichlorobenzene	115		-		70-130	-		
Ethyl ether	83		-		70-130	-		
n-Butylbenzene	116		-		70-130	-		
sec-Butylbenzene	103		-		70-130	-		
tert-Butylbenzene	101		-		70-130	-		
1,2-Dibromo-3-chloropropane	115		-		70-130	-		
p-Isopropyltoluene	101		-		70-130	-		
n-Propylbenzene	100		-		70-130	-		
1,3-Dichloropropane	94		-		70-130	-		
Methanol	95		-		70-130	-		
Butane	95		-		70-130	-		
Nonane (C9)	91		-		70-130	-		
Decane (C10)	98		-		70-130	-		
Undecane	110		-		70-130	-		
Dodecane (C12)	123		-		70-130	-		
Butyl Acetate	87		-		70-130	-		
2,4,4-Trimethyl-2-Pentene	116		-		70-130	-		
2,4,4-Trimethyl-1-Pentene	**152**	Q	-		70-130	-		
tert-Butyl Alcohol	**53**	Q	-		70-130	-		

Lab Duplicate Analysis
Batch Quality Control

Project Name: CITY OF NB
Project Number: 115058

Lab Number: L1005130
Report Date: 04/30/10

Parameter	Native Sample	Duplicate Sample	Units	RPD	Qual	RPD Limits
Volatile Organics in Air (Low Level) - Mansfield Lab Associated sample(s): 01 QC Batch ID: WG407572-5 QC Sample: L1004973-02 Client ID: DUP Sample						
1,1,1-Trichloroethane	ND	ND	ppbV	NC		25
1,1,2,2-Tetrachloroethane	ND	ND	ppbV	NC		25
1,1,2-Trichloroethane	ND	ND	ppbV	NC		25
1,1-Dichloroethane	ND	ND	ppbV	NC		25
1,1-Dichloroethene	ND	ND	ppbV	NC		25
1,2,4-Trichlorobenzene	ND	ND	ppbV	NC		25
1,2,4-Trimethylbenzene	ND	ND	ppbV	NC		25
1,2-Dibromoethane	ND	ND	ppbV	NC		25
1,2-Dichlorobenzene	ND	ND	ppbV	NC		25
1,2-Dichloroethane	ND	ND	ppbV	NC		25
1,2-Dichloropropane	ND	ND	ppbV	NC		25
1,3,5-Trimethybenzene	ND	ND	ppbV	NC		25
1,3-Dichlorobenzene	ND	ND	ppbV	NC		25
1,4-Dichlorobenzene	ND	ND	ppbV	NC		25
2-Butanone	0.767	0.567	ppbV	**30**	Q	25
Acetone	9.78	10.4	ppbV	6		25
Benzene	0.296	0.298	ppbV	1		25
Bromodichloromethane	ND	ND	ppbV	NC		25
Bromoform	ND	ND	ppbV	NC		25

Lab Duplicate Analysis
Batch Quality Control

Project Name: CITY OF NB
Project Number: 115058

Lab Number: L1005130
Report Date: 04/30/10

Parameter	Native Sample	Duplicate Sample	Units	RPD	RPD Limits
Volatile Organics in Air (Low Level) - Mansfield Lab Associated sample(s): 01 QC Batch ID: WG407572-5 QC Sample: L1004973-02 Client ID: DUP Sample					
Bromomethane	ND	ND	ppbV	NC	25
Carbon disulfide	ND	ND	ppbV	NC	25
Carbon tetrachloride	ND	ND	ppbV	NC	25
Chlorobenzene	ND	ND	ppbV	NC	25
Chloroethane	ND	ND	ppbV	NC	25
Chloroform	0.410	0.412	ppbV	0	25
Chloromethane	0.799	0.815	ppbV	2	25
cis-1,2-Dichloroethene	ND	ND	ppbV	NC	25
cis-1,3-Dichloropropene	ND	ND	ppbV	NC	25
Dibromochloromethane	ND	ND	ppbV	NC	25
Dichlorodifluoromethane	0.529	0.554	ppbV	5	25
Ethylbenzene	ND	ND	ppbV	NC	25
Hexachlorobutadiene	ND	ND	ppbV	NC	25
Methylene chloride	ND	ND	ppbV	NC	25
4-Methyl-2-pentanone	ND	ND	ppbV	NC	25
Methyl tert butyl ether	ND	ND	ppbV	NC	25
p/m-Xylene	ND	ND	ppbV	NC	25
o-Xylene	ND	ND	ppbV	NC	25
Styrene	0.565	0.624	ppbV	10	25

Lab Duplicate Analysis
Batch Quality Control

Project Name: CITY OF NB
Project Number: 115058

Lab Number: L1005130
Report Date: 04/30/10

Parameter	Native Sample	Duplicate Sample	Units	RPD	RPD Limits
Volatile Organics in Air (Low Level) - Mansfield Lab Associated sample(s): 01 QC Batch ID: WG407572-5 QC Sample: L1004973-02 Client ID: DUP Sample					
Tetrachloroethene	ND	ND	ppbV	NC	25
Toluene	0.746	0.823	ppbV	10	25
trans-1,2-Dichloroethene	ND	ND	ppbV	NC	25
trans-1,3-Dichloropropene	ND	ND	ppbV	NC	25
Trichloroethene	ND	ND	ppbV	NC	25
Trichlorofluoromethane	2.08	2.21	ppbV	6	25
Vinyl chloride	ND	ND	ppbV	NC	25
2-Chlorotoluene	ND	ND	ppbV	NC	25

Project Name: CITY OF NB

Project Number: 115058

Lab Number: L1005130

Report Date: 04/30/10

Canister and Flow Controller Information

Samplenum	Client ID	Media ID	Media Type	Cleaning Batch ID	Initial Pressure (in. Hg)	Pressure on Receipt (in. Hg)	Flow Out mL/min	Flow In mL/min	% RSD
L1005130-01	PVP-6	0327	#90 SV		-	-	200	200	0
L1005130-01	PVP-6	389	2.7L Can	I1004194	-29.3	-1.5	-	-	-

Project Name: CITY OF NB
Project Number: 115058

Lab Number: L1005130
Report Date: 04/30/10

Sample Receipt and Container Information

Were project specific reporting limits specified? YES

Reagent H2O Preserved Vials Frozen on: NA

Cooler Information Custody Seal

Cooler	
N/A	Absent

Container Information

Container ID	Container Type	Cooler	pH	Temp deg C	Pres	Seal	Analysis
L1005130-01A	Canister - 2.7 Liter	N/A	NA		NA	Absent	TO15-LL(30)

*Hold days indicated by values in parentheses

GLOSSARY

Acronyms

EPA - Environmental Protection Agency.

LCS - Laboratory Control Sample: A sample matrix, free from the analytes of interest, spiked with verified known amounts of analytes or a material containing known and verified amounts of analytes.

LCSD - Laboratory Control Sample Duplicate: Refer to LCS.

MS - Matrix Spike Sample: A sample prepared by adding a known mass of target analyte to a specified amount of matrix sample for which an independent estimate of target analyte concentration is available.

MSD - Matrix Spike Sample Duplicate: Refer to MS.

NA - Not Applicable.

NC - Not Calculated: Term is utilized when one or more of the results utilized in the calculation are non-detect at the parameter's reporting unit.

NI - Not Ignitable.

RDL - Reported Detection Limit: The value at which an instrument can accurately measure an analyte at a specific concentration. The RDL includes any adjustments from dilutions, concentrations or moisture content, where applicable.

RPD - Relative Percent Difference: The results from matrix and/or matrix spike duplicates are primarily designed to assess the precision of analytical results in a given matrix and are expressed as relative percent difference (RPD). Values which are less than five times the reporting limit for any individual parameter are evaluated by utilizing the absolute difference between the values; although the RPD value will be provided in the report.

Terms

Analytical Method: Both the document from which the method originates and the analytical reference method. (Example: EPA 8260B is shown as 1,8260B.) The codes for the reference method documents are provided in the References section of the Addendum.

Data Qualifiers

A - Spectra identified as "Aldol Condensation Product".

B - The analyte was detected above the reporting limit in the associated method blank. Flag only applies to associated field samples that have detectable concentrations of the analyte at less than five times (5x) the concentration found in the blank. For MCP-related projects, flag only applies to associated field samples that have detectable concentrations of the analyte at less than ten times (10x) the concentration found in the blank. For DOD-related projects, flag only applies to associated field samples that have detectable concentrations of the analyte at less than ten times (10x) the concentration found in the blank AND the analyte was detected above one-half the reporting limit (or above the reporting limit for common lab contaminants) in the associated method blank.

D - Concentration of analyte was quantified from diluted analysis. Flag only applies to field samples that have detectable concentrations of the analyte.

E - Concentration of analyte exceeds the range of the calibration curve and/or linear range of the instrument.

H - The analysis of pH was performed beyond the regulatory-required holding time of 15 minutes from the time of sample collection.

P - The RPD between the results for the two columns exceeds the method-specified criteria.

Q - The quality control sample exceeds the associated acceptance criteria. Note: This flag is not applicable for matrix spike recoveries when the sample concentration is greater than 4x the spike added or for batch duplicate RPD when the sample concentrations are less than 5x the RDL. (Metals only.)

R - Analytical results are from sample re-analysis.

RE - Analytical results are from sample re-extraction.

J - Estimated value. This represents an estimated concentration for Tentatively Identified Compounds (TICs).

ND - Not detected at the reported detection limit (RDL) for the sample.

Report Format: Data Usability Report

REFERENCES

48 Compendium of Methods for the Determination of Toxic Organic Compounds in Ambient Air. Second Edition. EPA/625/R-96/010b, January 1999.

LIMITATION OF LIABILITIES

Alpha Analytical performs services with reasonable care and diligence normal to the analytical testing laboratory industry. In the event of an error, the sole and exclusive responsibility of Alpha Woods Hole Labs shall be to re-perform the work at it's own expense. In no event shall Alpha Analytical be held liable for any incidental, consequential or special damages, including but not limited to, damages in any way connected with the use of, interpretation of, information or analysis provided by Alpha Woods Hole Labs.

We strongly urge our clients to comply with EPA protocol regarding sample volume, preservation, cooling, containers, sampling procedures, holding time and splitting of samples in the field.

Certificate/Approval Program Summary

Last revised December 15, 2009 – Mansfield Facility

The following list includes only those analytes/methods for which certification/approval is currently held. For a complete listing of analytes for the referenced methods, please contact your Alpha Customer Service Representative.

Connecticut Department of Public Health Certificate/Lab ID: PH-0141.

Wastewater/Non-Potable Water (Inorganic Parameters: pH, Turbidity, Conductivity, Alkalinity, Aluminum, Antimony, Arsenic, Barium, Beryllium, Boron, Cadmium, Calcium, Chromium, Cobalt, Copper, Iron, Lead, Magnesium, Manganese, Mercury, Molybdenum, Nickel, Potassium, Selenium, Silver, Sodium, Strontium, Thallium, Tin, Vanadium, Zinc, Total Residue (Solids), Total Suspended Solids (non-filterable), Total Cyanide. Organic Parameters: PCBs, Organochlorine Pesticides, Technical Chlordane, Toxaphene, Acid Extractables, Benzidines, Phthalate Esters, Nitrosamines, Nitroaromatics & Isophorone, PAHs, Haloethers, Chlorinated Hydrocarbons, Volatile Organics.)

Solid Waste/Soil (Inorganic Parameters: pH, Aluminum, Antimony, Arsenic, Barium, Beryllium, Cadmium, Calcium, Chromium, Hexavalent Chromium, Cobalt, Copper, Iron, Lead, Magnesium, Manganese, Mercury, Molybdenum, Nickel, Potassium, Selenium, Silver, Sodium, Thallium, Vanadium, Zinc, Total Organic Carbon, Total Cyanide, Corrosivity, TCLP 1311. Organic Parameters: PCBs, Organochlorine Pesticides, Technical Chlordane, Toxaphene, Volatile Organics, Acid Extractables, Benzidines, Phthalates, Nitrosamines, Nitroaromatics & Cyclic Ketones, PAHs, Haloethers, Chlorinated Hydrocarbons.)

Florida Department of Health Certificate/Lab ID: E87814. ***NELAP Accredited.***

Non-Potable Water (Inorganic Parameters: SM2320B, EPA 120.1, SM2510B, EPA 245.1, EPA 150.1, EPA 160.2, SM2540D, EPA 335.2, SM2540G, EPA 180.1. Organic Parameters: EPA 625, 608.)

Solid & Chemical Materials (Inorganic Parameters: 6020, 7470, 7471, 9045, 9014. Organic Parameters: EPA 8260, 8270, 8082, 8081.)

Air & Emissions (EPA TO-15.)

Louisiana Department of Environmental Quality Certificate/Lab ID: 03090. ***NELAP Accredited.***

Non-Potable Water (Inorganic Parameters: EPA 120.1, 150.1, 160.2, 180.1, 200.8, 245.1, 310.1, 335.2, 608, 625, 1631, 3010, 3015, 3020, 6020, 9010, 9014, 9040, SM2320B, 2510B, 2540D, 2540G, 4500CN-E, 4500H-B, Organic Parameters: EPA 3510, 3580, 3630, 3640, 3660, 3665, 5030, 8015 (mod), 3570, 8081, 8082, 8260, 8270,)

Solid & Chemical Materials (Inorganic Parameters: 6020, 7196, 7470, 7471, 7474, 9010, 9014, 9040, 9045, 9060. Organic Parameters: EPA 8015 (mod), EPA 3570, 1311, 3050, 3051, 3060, 3580, 3630, 3640, 3660, 3665, 5035, 8081, 8082, 8260, 8270.)

Biological Tissue (Inorganic Parameters: EPA 6020. Organic Parameters: EPA 3570, 3510, 3610, 3630, 3640, 8270.)

Maine Department of Human Services Certificate/Lab ID: MA0030.

Wastewater (Inorganic Parameters: EPA 120.1, 300.0, SM 2320, 2510B, 2540C, 2540D, EPA 245.1. Organic Parameters: 608, 624.)

Massachusetts Department of Environmental Protection Certificate/Lab ID: M-MA030.

Non-Potable Water (Inorganic Parameters: SM4500H+B. Organic Parameters: EPA 624.)

New Hampshire Department of Environmental Services Certificate/Lab ID: 2206. ***NELAP Accredited.***

Non-Potable Water (Inorganic Parameters: EPA 200.8, 245.1, 1631E, 120.1, 150.1, 180.1, 310.1, 335.2, 160.2, SM2540D, 2540G, 4500CN-E, 4500H+B, 2320B, 2510B. Organic Parameters: EPA 625, 608.)

New Jersey Department of Environmental Protection Certificate/Lab ID: MA015. ***NELAP Accredited.***

Non-Potable Water (Inorganic Parameters: SW-846 1312, 3010, 3020A, 3015, 6020, SM2320B, EPA 200.8, SM2540C, 2540D, 2540G, EPA 120.1, SM2510B, EPA 180.1, 245.1, 1631E, SW-846 9040B, 6020, 9010B, 9014 Organic Parameters: EPA 608, 625, SW-846 3510C, 3580A, 5030B, 3035L, 5035H, 3630C, 3640A, 3660B, 3665A, 8081A, 8082 8260B, 8270C)

Solid & Chemical Materials (Inorganic Parameters: SW-846 6020, 9010B, 9014, 1311, 1312, 3050B, 3051, 3060A, 7196A, 7470A, 7471A, 9045C, 9060. Organic Parameters: SW-846 3580A, 5030B, 3035L, 5035H, 3630C, 3640A, 3660B, 3665A, 8081A, 8082, 8260B, 8270C, 3570, 8015B.)

Atmospheric Organic Parameters (EPA TO-15)

Biological Tissue (Inorganic Parameters: SW-846 6020 Organic Parameters: SW-846 8270C, 3510C, 3570, 3610B, 3630C, 3640A)

New York Department of Health Certificate/Lab ID: 11627. ***NELAP Accredited.***

Non-Potable Water (Inorganic Parameters: EPA 310.1, SM2320B, EPA 365.2, 160.1, EPA 160.2, SM2540D, EPA 200.8, 6020, 1631E, 245.1, 335.2, 9014, 150.1, 9040B, 120.1, SM2510B, EPA 376.2, 180.1, 9010B. Organic Parameters: EPA 624, 8260B, 8270C, 608, 8081A, 625, 8082, 3510C, 3511, 5030B.)

Solid & Hazardous Waste (Inorganic Parameters: EPA 9040B, 9045C, SW-846 Ch7 Sec 7.3, EPA 6020, 7196A, 7471A, 7474, 9014, 9040B, 9045C, 9010B. Organic Parameters: EPA 8260B, 8270C, 8081A, DRO 8015B, 8082, 1311, 3050B, 3580, 3050B, 3035, 3570, 3051, 5035, 5030B.)

Air & Emissions (EPA TO-15.)

Pennsylvania Department of Environmental Protection Certificate/Lab ID: 68-02089. ***NELAP Accredited.***

Non-Potable Water (Organic Parameters: EPA 5030B, EPA 8260)

Rhode Island Department of Health Certificate/Lab ID: LAO00299. ***NELAP Accredited via LA-DEQ.***

Refer to MA-DEP Certificate for Non-Potable Water.

Refer to LA-DEQ Certificate for Non-Potable Water.

Texas Commission of Environmental Quality Certificate/Lab ID: T104704419-08-TX. ***NELAP Accredited.***

Solid & Chemical Materials (Inorganic Parameters: EPA 6020, 7470, 7471, 1311, 7196, 9014, 9040, 9045, 9060. Organic Parameters: EPA 8015, 8270, 8260, 8081, 8082.)

U.S. Army Corps of Engineers

Department of Defense Certificate/Lab ID: L2217.01.

Non-Potable Water (Inorganic Parameters: EPA 3005A,3020, 6020, 245.1, 245.7, 1631E, 7470A, 7474, 9014, 120.1, 9050A, 180.1, SM4500H-B, 2320B, 2510B, 2540D,9040. Organic Parameters: EPA 3510C, 5030B, 9010B, 624, 8260B, 8270C, 8270 Alk-PAH, 8082, 8081A, 8015 (SHC), 8015 (DRO).)

Solid & Hazardous Waste (Inorganic Parameters: EPA 1311, 1312,3051, 6020, 747A, 7474, 9045C,9060, SM 2540G, ASTM D422-63. Organic Parameters: EPA 3580, 3570, 3540C, 5035, 8260B, 8270C, 8270 Alk-PAH, 8082, 8081A, 8015 (SHC), 8015 (DRO).

Air & Emissions (EPA TO-15.)

Analytes Not Accredited by NELAP
Certification is not available by NELAP for the following analytes: **8270C:** Biphenyl.

AIR ANALYSIS

PAGE ___ OF ___

ALPHA ANALYTICAL

CHAIN OF CUSTODY

320 Forbes Blvd, Mansfield, MA 02048
TEL: 508-822-9300 FAX: 508-822-3288

Date Rec'd in Lab:

ALPHA Job #: L1005130

Client Information

Client: TRC
Address: 650 Suffolk St
Lowell MA 01854
Phone: 978-970-5600
Fax: 978-453-1995
Email: dsullivan@trcsolutions.com

☐ These samples have been previously analyzed by Alpha

Project Information

Project Name: City of NB
Project Location: NBHS
Project #: 115058
Project Manager: David Sullivan
ALPHA Quote #: 20096130

Turn-Around Time

☒ Standard 5 day ☐ RUSH (only confirmed if pre-approved!)
Date Due: Time:

Report Information - Data Deliverables

☐ FAX
☐ ADEx
Criteria Checker: ___
(Default based on Regulatory Criteria Indicated)
Other Formats: ___
☒ EMAIL (standard pdf report)
☐ Additional Deliverables: ___
Report to: (if different than Project Manager)

Billing Information

☐ Same as Client info PO #:

Regulatory Requirements/Report Limits

State/Fed	Program	Criteria

Other Project Specific Requirements/Comments:

All Columns Below Must Be Filled Out

ALPHA Lab ID (Lab Use Only)	Sample ID	Collection Date	Start Time	End Time	Initial Vacuum	Final Vacuum	Sample Matrix*	Sampler's Initials	Can Size	ID Can	ID - Flow Controller	TO-14A by TO-15	TO-15	TO-15 SIM	APH	FIXED GASES	TO-13A	TO-4 / TO-10	Sample Comments (i.e. PID)
5130-1	~~PVP-9~~ PVP-6 ml 4/20/10	4/9/10	1147	1206	-29.3	5.00	SV	AW	2.7	389	0327		X						

*SAMPLE MATRIX CODES
AA = Ambient Air (Indoor/Outdoor)
SV = Soil Vapor/Landfill Gas/SVE
Other = Please Specify

Container Type: C

Relinquished By:	Date/Time	Received By:	Date/Time:
[signature]	4/9/10 1400	[signature]	4/9/10 1400

Please print clearly, legibly and completely. Samples can not be logged in and turnaround time clock will not start until any ambiguities are resolved. All samples submitted are subject to Alpha's Terms and Conditions. See reverse side.

Form No: 101-02 (19-Jun-09)

AIR ANALYSIS

PAGE ___ OF ___

ALPHA ANALYTICAL

CHAIN OF CUSTODY

320 Forbes Blvd, Mansfield, MA 02048
TEL: 508-822-9300 FAX: 508-822-3288

Date Rec'd in Lab:

ALPHA Job #: L1005130

Client Information

Client: TRC
Address: 650 Suffolk St
Lowell MA 01854
Phone: 978-970-5600
Fax: 978-453-1995
Email: dsullivan@trcsolutions.com

☐ These samples have been previously analyzed by Alpha

Project Information

Project Name: Cityof NB
Project Location: NBHS
Project #: 115658
Project Manager: David Sullivan
ALPHA Quote #: 20096130

Turn-Around Time

☒ Standard 5 day ☐ RUSH (only confirmed if pre-approved)
Date Due: Time:

Report Information - Data Deliverables

☐ FAX
☐ ADEx
Criteria Checker: ___
(Default based on Regulatory Criteria Indicated)
Other Formats: ___
☒ EMAIL (standard pdf report)
☐ Additional Deliverables: ___
Report to: (if different than Project Manager)

Billing Information

☐ Same as Client Info PO #:

Regulatory Requirements/Report Limits

State/Fed	Program	Criteria

Other Project Specific Requirements/Comments:

All Columns Below Must Be Filled Out

ALPHA Lab ID (Lab Use Only)	Sample ID	Collection Date	Start Time	End Time	Initial Vacuum	Final Vacuum	Sample Matrix*	Sampler's Initials	Can Size	ID Can	ID - Flow Controller	TO-14A by TO-15	TO-15	TO-15 SIM	APH	FIXED GASES	TO-13A	TO-4 / TO-10	Sample Comments (i.e. PID)
5130-1	PVP-9	4/9/10	1147	1206	-29.3	5.00	SV	AW	2.7	389	0327		X						

Container Type: C

*SAMPLE MATRIX CODES
AA = Ambient Air (Indoor/Outdoor)
SV = Soil Vapor/Landfill Gas/SVB
Other = Please Specify

Relinquished By:	Date/Time	Received By:	Date/Time:
[illegible]	4/9/10 1400	[illegible]	4/9/10 1400

Please print clearly, legibly and completely. Samples can not be logged in and turnaround time clock will not start until any ambiguities are resolved. All samples submitted are subject to Alpha's Terms and Conditions. See reverse side.

Form No: 101-02 (19-Jun-09)

ALPHA ANALYTICAL

ANALYTICAL REPORT

Lab Number:	L1005748
Client:	TRC Environmental Consultants Wannalancit Mills 650 Suffolk Street Lowell, MA 01854
ATTN:	David Sullivan
Phone:	(978) 656-3565
Project Name:	CITY OF NEW BEDFORD
Project Number:	115058
Report Date:	05/11/10

Certifications & Approvals: MA (M-MA030), NY (11627), CT (PH-0141), NH (2206), NJ (MA015), RI (LAO00299), ME (MA0030), PA (Registration #68-02089), LA NELAC (03090), FL NELAC (E87814), US Army Corps of Engineers.

320 Forbes Boulevard, Mansfield, MA 02048-1806
508-822-9300 (Fax) 508-822-3288 800-624-9220 - www.alphalab.com

Project Name: CITY OF NEW BEDFORD
Project Number: 115058

Lab Number: L1005748
Report Date: 05/11/10

Alpha Sample ID	Client ID	Sample Location	Collection Date/Time
L1005748-01	PVP-1	NBHS	04/20/10 09:36
L1005748-02	TRC-IA-7	NBHS	04/20/10 09:10
L1005748-03	TRC-IA-6	NBHS	04/20/10 09:05
L1005748-04	TRC-IA-8	NBHS	04/20/10 09:21
L1005748-05	TRC-IA-5	NBHS	04/20/10 09:23
L1005748-06	PVP-2	NBHS	04/20/10 10:12
L1005748-07	PVP-3	NBHS	04/20/10 10:29
L1005748-08	TRC-IA-10	NBHS	04/20/10 09:30
L1005748-09	PVP-4	NBHS	04/20/10 11:05
L1005748-10	TRC-IA-11	NBHS	04/20/10 09:30
L1005748-11	TRC-IA-13	NBHS	04/20/10 11:10
L1005748-12	PVP-5	NBHS	04/20/10 11:40
L1005748-13	TRC-IA-12	NBHS	04/20/10 11:00
L1005748-14	TRC-IA-14	NBHS	04/20/10 10:55
L1005748-15	PVP-7	NBHS	04/20/10 12:10
L1005748-16	PVP-8	NBHS	04/20/10 12:26
L1005748-17	TRC-IA-9	NBHS	04/20/10 11:45
L1005748-18	TRC-IA-15	NBHS	04/20/10 10:00
L1005748-19	TRC-IA-1	NBHS	04/20/10 10:04
L1005748-20	PVP-6	NBHS	04/20/10 14:31
L1005748-21	CAN 899	NBHS	
L1005748-22	CAN 654	NBHS	
L1005748-23	CAN 653	NBHS	
L1005748-24	CAN 403	NBHS	

Case Narrative

The samples were received in accordance with the Chain of Custody and no significant deviations were encountered during the preparation or analysis unless otherwise noted. Sample Receipt, Container Information, and the Chain of Custody are located at the back of the report.

Results contained within this report relate only to the samples submitted under this Alpha Lab Number and meet all of the requirements of NELAC, for all NELAC accredited parameters. The data presented in this report is organized by parameter (i.e. VOC, SVOC, etc.). Sample specific Quality Control data (i.e. Surrogate Spike Recovery) is reported at the end of the target analyte list for each individual sample, followed by the Laboratory Batch Quality Control at the end of each parameter. If a sample was re-analyzed or re-extracted due to a required quality control corrective action and if both sets of data are reported, the Laboratory ID of the re-analysis or re-extraction is designated with an "R" or "RE", respectively. When multiple Batch Quality Control elements are reported (e.g. more than one LCS), the associated samples for each element are noted in the grey shaded header line of each data table. Any Laboratory Batch, Sample Specific % recovery or RPD value that is outside the listed Acceptance Criteria is bolded in the report. Definitions of all data qualifiers and acronyms used in this report are provided in the Glossary located at the back of the report.

Please see the associated ADEx data file for a comparison of laboratory reporting limits that were achieved with the regulatory Numerical Standards requested on the Chain of Custody.

For additional information, please contact Client Services at 800-624-9220.

Report Submission

This report replaces the report issued on April 30, 2010. Additional compounds are being reported via SIM per client request. The canister certification results are provided as an addendum. The narrative section has also been amended.

Report Submission

This report replaces the report issued on April 28, 2010. The sampling date has been corrected on L1005748-02 through -05, -08, -10, -11, -13, -14, and -17 through -19.

Sample Receipt

A prefix of TRC- was added to all IA samples per client request.

Case Narrative (continued)

L1005748-09 The RPD of the pre- and post-flow controller calibration check (% RPD) was outside acceptable limits (< or = 20% RPD).

Volatile Organics in Air (Low Level)
L1005748-03, -05, -18, -19 and WG409613-5: results for Acetone should be considered estimated due to co-elution with a non-target peak.

L1005748-16 has elevated detection limits due to the dilution required by the elevated concentrations of non target compounds in the sample.

L1005748-20 has elevated detection limits due to the dilution required by the elevated concentrations of target compounds in the sample. The sample was re-analyzed on dilution in order to quantitate the sample within the calibration range. The result should be considered estimated, and is qualified with an E flag, for any compound that exceeded the calibration on the initial analysis. The re-analysis was performed only for the compound that exceeded the calibration range.

The WG409613-3 LCS recoveries for 1,2,4-Trichlorobenzene (158%) and Naphthalene (149%) are outside the 70%-130% acceptance limit. All samples associated with this LCS do not have reportable amounts of 1,2,4-Trichlorobenzene and Naphthalene, therefore data is reported.

The WG409614-3 LCS recoveries for 1,2-Dichloropropane (69%), Cyclohexane (69%), Heptane (68%), Hexane (68%), and trans-1,3-Dichloropropene(68%) are outside the 70%-130% acceptance limit. The LCS was within overall method allowances, therefore the analysis proceeded.

The WG409614-8 LCS recoveries for 1,2-Dichloropropane (65%), 2,2,4-Trimethylpentane (65%), Benzene (66%), Cyclohexane (65%), Heptane (62%), Hexane (64%), trans-1,3-Dichloropropene (69%), and Dibromomethane (68%) are outside the 70%-130% acceptance limit. The LCS was within overall method allowances, therefore the analysis proceeded.

Case Narrative (continued)

The WG410010-3 LCS recoveries for 3-Chloropropene (64%) and 1,2,4-Trichlorobenzene (140%) are outside the 70%-130% acceptance limit. The LCS was within overall method allowances, therefore the analysis proceeded.

Volatile Organics in Air (SIM)
The WG409612-3 LCS recovery for trans-1,3-Dichloropropene (68%) is outside the 70%-130% acceptance limit. The LCS was within overall method allowances, therefore the analysis proceeded.

I, the undersigned, attest under the pains and penalties of perjury that, to the best of my knowledge and belief and based upon my personal inquiry of those responsible for providing the information contained in this analytical report, such information is accurate and complete. This certificate of analysis is not complete unless this page accompanies any and all pages of this report.

Authorized Signature: Kathleen M. O'Brien Kathleen O'Brien

Title: Technical Director/Representative Date: 05/11/10

AIR

Project Name:	CITY OF NEW BEDFORD	***Lab Number:***	L1005748
Project Number:	115058	***Report Date:***	05/11/10

SAMPLE RESULTS

Lab ID:	L1005748-01	Date Collected:	04/20/10 09:36
Client ID:	PVP-1	Date Received:	04/21/10
Sample Location:	NBHS	Field Prep:	Not Specified
Matrix:	Soil_Vapor		
Anaytical Method:	48,TO-15		
Analytical Date:	04/26/10 18:52		
Analyst:	AJ		

	ppbV			ug/m3				
Parameter	**Results**	**RL**	**MDL**	**Results**	**RL**	**MDL**	**Qualifier**	**Dilution Factor**
Volatile Organics in Air (Low Level) - Mansfield Lab								
1,1,1-Trichloroethane	ND	0.200	--	ND	1.09	--		1
1,1,2,2-Tetrachloroethane	ND	0.200	--	ND	1.37	--		1
1,1,2-Trichloroethane	ND	0.200	--	ND	1.09	--		1
1,1-Dichloroethane	ND	0.200	--	ND	0.809	--		1
1,1-Dichloroethene	ND	0.200	--	ND	0.792	--		1
1,2,4-Trichlorobenzene	ND	0.200	--	ND	1.48	--		1
1,2,4-Trimethylbenzene	ND	0.200	--	ND	0.982	--		1
1,2-Dibromoethane	ND	0.200	--	ND	1.54	--		1
1,2-Dichlorobenzene	ND	0.200	--	ND	1.20	--		1
1,2-Dichloroethane	ND	0.200	--	ND	0.809	--		1
1,2-Dichloropropane	ND	0.200	--	ND	0.924	--		1
1,3,5-Trimethybenzene	ND	0.200	--	ND	0.982	--		1
1,3-Dichlorobenzene	ND	0.200	--	ND	1.20	--		1
1,4-Dichlorobenzene	ND	0.200	--	ND	1.20	--		1
1,4-Dioxane	ND	0.200	--	ND	0.720	--		1
2-Butanone	ND	0.200	--	ND	0.589	--		1
2-Hexanone	ND	0.200	--	ND	0.819	--		1
Acetone	1.73	1.00	--	4.10	2.37	--		1
Benzene	ND	0.200	--	ND	0.638	--		1
Bromodichloromethane	ND	0.200	--	ND	1.34	--		1
Bromoform	ND	0.200	--	ND	2.06	--		1
Bromomethane	ND	0.200	--	ND	0.776	--		1
Carbon disulfide	ND	0.200	--	ND	0.622	--		1
Carbon tetrachloride	ND	0.200	--	ND	1.26	--		1
Chlorobenzene	ND	0.200	--	ND	0.920	--		1

Project Name:	CITY OF NEW BEDFORD	***Lab Number:***	L1005748
Project Number:	115058	***Report Date:***	05/11/10

SAMPLE RESULTS

Lab ID:	L1005748-01	Date Collected:	04/20/10 09:36
Client ID:	PVP-1	Date Received:	04/21/10
Sample Location:	NBHS	Field Prep:	Not Specified

	ppbV			ug/m3				
Parameter	**Results**	**RL**	**MDL**	**Results**	**RL**	**MDL**	**Qualifier**	**Dilution Factor**
Volatile Organics in Air (Low Level) - Mansfield Lab								
Chloroethane	ND	0.200	--	ND	0.527	--		1
Chloroform	ND	0.200	--	ND	0.976	--		1
Chloromethane	ND	0.200	--	ND	0.413	--		1
cis-1,2-Dichloroethene	ND	0.200	--	ND	0.792	--		1
cis-1,3-Dichloropropene	ND	0.200	--	ND	0.907	--		1
Dibromochloromethane	ND	0.200	--	ND	1.70	--		1
Dichlorodifluoromethane	0.666	0.200	--	3.29	0.988	--		1
Ethylbenzene	ND	0.200	--	ND	0.868	--		1
Hexachlorobutadiene	ND	0.200	--	ND	2.13	--		1
Methylene chloride	ND	0.500	--	ND	1.74	--		1
4-Methyl-2-pentanone	ND	0.200	--	ND	0.819	--		1
Methyl tert butyl ether	ND	0.200	--	ND	0.720	--		1
p/m-Xylene	ND	0.400	--	ND	1.74	--		1
o-Xylene	ND	0.200	--	ND	0.868	--		1
Styrene	ND	0.200	--	ND	0.851	--		1
Tetrachloroethene	0.993	0.200	--	6.73	1.36	--		1
Tetrahydrofuran	ND	0.200	--	ND	0.589	--		1
Toluene	ND	0.200	--	ND	0.753	--		1
trans-1,2-Dichloroethene	ND	0.200	--	ND	0.792	--		1
trans-1,3-Dichloropropene	ND	0.200	--	ND	0.907	--		1
Trichloroethene	0.384	0.200	--	2.06	1.07	--		1
Trichlorofluoromethane	0.328	0.200	--	1.84	1.12	--		1
Vinyl chloride	ND	0.200	--	ND	0.511	--		1
Naphthalene	ND	0.200	--	ND	1.05	--		1
1,1,1,2-Tetrachloroethane	ND	0.200	--	ND	1.37	--		1
Isopropylbenzene	ND	0.200	--	ND	0.982	--		1
1,2,3-Trichloropropane	ND	0.200	--	ND	1.20	--		1
Bromobenzene	ND	0.200	--	ND	1.28	--		1

Project Name:	CITY OF NEW BEDFORD	***Lab Number:***	L1005748
Project Number:	115058	***Report Date:***	05/11/10

SAMPLE RESULTS

Lab ID:	L1005748-01	Date Collected:	04/20/10 09:36
Client ID:	PVP-1	Date Received:	04/21/10
Sample Location:	NBHS	Field Prep:	Not Specified

	ppbV			ug/m3				
Parameter	**Results**	**RL**	**MDL**	**Results**	**RL**	**MDL**	**Qualifier**	**Dilution Factor**
Volatile Organics in Air (Low Level) - Mansfield Lab								
Dibromomethane	ND	0.200	--	ND	1.42	--		1
tert-Amyl Methyl Ether	ND	0.200	--	ND	0.835	--		1
2-Chlorotoluene	ND	0.200	--	ND	1.03	--		1
4-Chlorotoluene	ND	0.200	--	ND	1.03	--		1
2,2-Dichloropropane	ND	0.200	--	ND	0.923	--		1
1,1-Dichloropropene	ND	0.200	--	ND	0.907	--		1
Diisopropyl ether	ND	0.200	--	ND	0.835	--		1
tert-Butyl Ethyl Ether	ND	0.200	--	ND	0.835	--		1
1,2,3-Trichlorobenzene	ND	0.200	--	ND	1.48	--		1
Ethyl ether	ND	0.200	--	ND	0.606	--		1
n-Butylbenzene	ND	0.200	--	ND	1.10	--		1
sec-Butylbenzene	ND	0.200	--	ND	1.10	--		1
tert-Butylbenzene	ND	0.200	--	ND	1.10	--		1
1,2-Dibromo-3-chloropropane	ND	0.200	--	ND	1.93	--		1
p-Isopropyltoluene	ND	0.200	--	ND	1.10	--		1
n-Propylbenzene	ND	0.200	--	ND	0.982	--		1
1,3-Dichloropropane	ND	0.200	--	ND	0.923	--		1

Project Name:	CITY OF NEW BEDFORD	***Lab Number:***	L1005748
Project Number:	115058	***Report Date:***	05/11/10

SAMPLE RESULTS

Lab ID:	L1005748-02	Date Collected:	04/20/10 09:10
Client ID:	TRC-IA-7	Date Received:	04/21/10
Sample Location:	NBHS	Field Prep:	Not Specified
Matrix:	Air		
Anaytical Method:	48,TO-15		
Analytical Date:	04/27/10 18:36		
Analyst:	AJ		

	ppbV			ug/m3				
Parameter	**Results**	**RL**	**MDL**	**Results**	**RL**	**MDL**	**Qualifier**	**Dilution Factor**
Volatile Organics in Air (Low Level) - Mansfield Lab								
Dichlorodifluoromethane	0.438	0.200	--	2.16	0.988	--		1
Chloromethane	0.537	0.200	--	1.11	0.413	--		1
Vinyl chloride	ND	0.200	--	ND	0.511	--		1
Bromomethane	ND	0.200	--	ND	0.776	--		1
Chloroethane	ND	0.200	--	ND	0.527	--		1
Acetone	2.18	1.00	--	5.18	2.37	--		1
Trichlorofluoromethane	ND	0.200	--	ND	1.12	--		1
Ethyl ether	ND	0.200	--	ND	0.606	--		1
1,1-Dichloroethene	ND	0.200	--	ND	0.792	--		1
Methylene chloride	ND	0.500	--	ND	1.74	--		1
Carbon disulfide	ND	0.200	--	ND	0.622	--		1
trans-1,2-Dichloroethene	ND	0.200	--	ND	0.792	--		1
1,1-Dichloroethane	ND	0.200	--	ND	0.809	--		1
Methyl tert butyl ether	ND	0.200	--	ND	0.720	--		1
2-Butanone	ND	0.200	--	ND	0.589	--		1
cis-1,2-Dichloroethene	ND	0.200	--	ND	0.792	--		1
Chloroform	ND	0.200	--	ND	0.976	--		1
Tetrahydrofuran	ND	0.200	--	ND	0.589	--		1
2,2-Dichloropropane	ND	0.200	--	ND	0.923	--		1
1,2-Dichloroethane	ND	0.200	--	ND	0.809	--		1
Diisopropyl ether	ND	0.200	--	ND	0.835	--		1
tert-Butyl Ethyl Ether	ND	0.200	--	ND	0.835	--		1
1,1,1-Trichloroethane	ND	0.200	--	ND	1.09	--		1
1,1-Dichloropropene	ND	0.200	--	ND	0.907	--		1
Benzene	ND	0.200	--	ND	0.638	--		1

Project Name:	CITY OF NEW BEDFORD	***Lab Number:***	L1005748
Project Number:	115058	***Report Date:***	05/11/10

SAMPLE RESULTS

Lab ID:	L1005748-02	Date Collected:	04/20/10 09:10
Client ID:	TRC-IA-7	Date Received:	04/21/10
Sample Location:	NBHS	Field Prep:	Not Specified

	ppbV			ug/m3				
Parameter	**Results**	**RL**	**MDL**	**Results**	**RL**	**MDL**	**Qualifier**	**Dilution Factor**
Volatile Organics in Air (Low Level) - Mansfield Lab								
Carbon tetrachloride	ND	0.200	--	ND	1.26	--		1
tert-Amyl Methyl Ether	ND	0.200	--	ND	0.835	--		1
Dibromomethane	ND	0.200	--	ND	1.42	--		1
1,2-Dichloropropane	ND	0.200	--	ND	0.924	--		1
Bromodichloromethane	ND	0.200	--	ND	1.34	--		1
1,4-Dioxane	ND	0.200	--	ND	0.720	--		1
Trichloroethene	ND	0.200	--	ND	1.07	--		1
cis-1,3-Dichloropropene	ND	0.200	--	ND	0.907	--		1
4-Methyl-2-pentanone	ND	0.200	--	ND	0.819	--		1
trans-1,3-Dichloropropene	ND	0.200	--	ND	0.907	--		1
1,1,2-Trichloroethane	ND	0.200	--	ND	1.09	--		1
Toluene	0.374	0.200	--	1.41	0.753	--		1
1,3-Dichloropropane	ND	0.200	--	ND	0.923	--		1
2-Hexanone	ND	0.200	--	ND	0.819	--		1
Dibromochloromethane	ND	0.200	--	ND	1.70	--		1
1,2-Dibromoethane	ND	0.200	--	ND	1.54	--		1
Tetrachloroethene	ND	0.200	--	ND	1.36	--		1
1,1,1,2-Tetrachloroethane	ND	0.200	--	ND	1.37	--		1
Chlorobenzene	ND	0.200	--	ND	0.920	--		1
Ethylbenzene	ND	0.200	--	ND	0.868	--		1
p/m-Xylene	ND	0.400	--	ND	1.74	--		1
Bromoform	ND	0.200	--	ND	2.06	--		1
Styrene	ND	0.200	--	ND	0.851	--		1
1,1,2,2-Tetrachloroethane	ND	0.200	--	ND	1.37	--		1
o-Xylene	ND	0.200	--	ND	0.868	--		1
1,2,3-Trichloropropane	ND	0.200	--	ND	1.20	--		1
Isopropylbenzene	ND	0.200	--	ND	0.982	--		1
Bromobenzene	ND	0.200	--	ND	1.28	--		1

Project Name:	CITY OF NEW BEDFORD	***Lab Number:***	L1005748
Project Number:	115058	***Report Date:***	05/11/10

SAMPLE RESULTS

Lab ID:	L1005748-02	Date Collected:	04/20/10 09:10
Client ID:	TRC-IA-7	Date Received:	04/21/10
Sample Location:	NBHS	Field Prep:	Not Specified

	ppbV			ug/m3				
Parameter	**Results**	**RL**	**MDL**	**Results**	**RL**	**MDL**	**Qualifier**	**Dilution Factor**
Volatile Organics in Air (Low Level) - Mansfield Lab								
2-Chlorotoluene	ND	0.200	--	ND	1.03	--		1
n-Propylbenzene	ND	0.200	--	ND	0.982	--		1
4-Chlorotoluene	ND	0.200	--	ND	1.03	--		1
1,3,5-Trimethybenzene	ND	0.200	--	ND	0.982	--		1
tert-Butylbenzene	ND	0.200	--	ND	1.10	--		1
1,2,4-Trimethylbenzene	ND	0.200	--	ND	0.982	--		1
1,3-Dichlorobenzene	ND	0.200	--	ND	1.20	--		1
1,4-Dichlorobenzene	ND	0.200	--	ND	1.20	--		1
sec-Butylbenzene	ND	0.200	--	ND	1.10	--		1
p-Isopropyltoluene	ND	0.200	--	ND	1.10	--		1
1,2-Dichlorobenzene	ND	0.200	--	ND	1.20	--		1
n-Butylbenzene	ND	0.200	--	ND	1.10	--		1
1,2-Dibromo-3-chloropropane	ND	0.200	--	ND	1.93	--		1
1,2,4-Trichlorobenzene	ND	0.200	--	ND	1.48	--		1
Naphthalene	ND	0.200	--	ND	1.05	--		1
1,2,3-Trichlorobenzene	ND	0.200	--	ND	1.48	--		1
Hexachlorobutadiene	ND	0.200	--	ND	2.13	--		1

Project Name:	CITY OF NEW BEDFORD	***Lab Number:***	L1005748
Project Number:	115058	***Report Date:***	05/11/10

SAMPLE RESULTS

Lab ID:	L1005748-02	Date Collected:	04/20/10 09:10
Client ID:	TRC-IA-7	Date Received:	04/21/10
Sample Location:	NBHS	Field Prep:	Not Specified
Matrix:	Air		
Anaytical Method:	48,TO-15-SIM		
Analytical Date:	04/27/10 18:36		
Analyst:	AJ		

	ppbV			ug/m3				
Parameter	**Results**	**RL**	**MDL**	**Results**	**RL**	**MDL**	**Qualifier**	**Dilution Factor**
Volatile Organics in Air by SIM - Mansfield Lab								
Vinyl chloride	ND	0.020	--	ND	0.051	--		1
trans-1,2-Dichloroethene	ND	0.020	--	ND	0.079	--		1
cis-1,2-Dichloroethene	0.062	0.020	--	0.246	0.079	--		1
Chloroform	ND	0.020	--	ND	0.098	--		1
1,2-Dichloroethane	ND	0.020	--	ND	0.081	--		1
Benzene	ND	0.100	--	ND	0.319	--		1
Carbon tetrachloride	0.076	0.020	--	0.478	0.126	--		1
1,2-Dichloropropane	ND	0.020	--	ND	0.092	--		1
Bromodichloromethane	ND	0.020	--	ND	0.134	--		1
Trichloroethene	0.086	0.020	--	0.462	0.107	--		1
1,4-Dioxane	ND	0.100	--	ND	0.360	--		1
cis-1,3-Dichloropropene	ND	0.020	--	ND	0.091	--		1
trans-1,3-Dichloropropene	ND	0.020	--	ND	0.091	--		1
1,1,2-Trichloroethane	ND	0.020	--	ND	0.109	--		1
Dibromochloromethane	ND	0.020	--	ND	0.096	--		1
1,2-Dibromoethane	ND	0.020	--	ND	0.154	--		1
Tetrachloroethene	ND	0.020	--	ND	0.136	--		1
1,1,2,2-Tetrachloroethane	ND	0.020	--	ND	0.137	--		1
1,4-Dichlorobenzene	ND	0.020	--	ND	0.120	--		1
Naphthalene	ND	0.050	--	ND	0.262	--		1
Hexachlorobutadiene	ND	0.050	--	ND	0.192	--		1

Project Name:	CITY OF NEW BEDFORD	***Lab Number:***	L1005748
Project Number:	115058	***Report Date:***	05/11/10

SAMPLE RESULTS

Lab ID:	L1005748-03	Date Collected:	04/20/10 09:05
Client ID:	TRC-IA-6	Date Received:	04/21/10
Sample Location:	NBHS	Field Prep:	Not Specified
Matrix:	Air		
Anaytical Method:	48,TO-15		
Analytical Date:	04/24/10 18:29		
Analyst:	AJ		

	ppbV			ug/m3				
Parameter	**Results**	**RL**	**MDL**	**Results**	**RL**	**MDL**	**Qualifier**	**Dilution Factor**
Volatile Organics in Air (Low Level) - Mansfield Lab								
1,1,1-Trichloroethane	ND	0.200	--	ND	1.09	--		1
1,1,2,2-Tetrachloroethane	ND	0.200	--	ND	1.37	--		1
1,1,2-Trichloroethane	ND	0.200	--	ND	1.09	--		1
1,1-Dichloroethane	ND	0.200	--	ND	0.809	--		1
1,1-Dichloroethene	ND	0.200	--	ND	0.792	--		1
1,2,4-Trichlorobenzene	ND	0.200	--	ND	1.48	--		1
1,2,4-Trimethylbenzene	ND	0.200	--	ND	0.982	--		1
1,2-Dibromoethane	ND	0.200	--	ND	1.54	--		1
1,2-Dichlorobenzene	ND	0.200	--	ND	1.20	--		1
1,2-Dichloroethane	ND	0.200	--	ND	0.809	--		1
1,2-Dichloropropane	ND	0.200	--	ND	0.924	--		1
1,3,5-Trimethybenzene	ND	0.200	--	ND	0.982	--		1
1,3-Dichlorobenzene	ND	0.200	--	ND	1.20	--		1
1,4-Dichlorobenzene	ND	0.200	--	ND	1.20	--		1
1,4-Dioxane	ND	0.200	--	ND	0.720	--		1
2-Butanone	ND	0.200	--	ND	0.589	--		1
2-Hexanone	ND	0.200	--	ND	0.819	--		1
Acetone	2.87	1.00	--	6.81	2.37	--		1
Benzene	ND	0.200	--	ND	0.638	--		1
Bromodichloromethane	ND	0.200	--	ND	1.34	--		1
Bromoform	ND	0.200	--	ND	2.06	--		1
Bromomethane	ND	0.200	--	ND	0.776	--		1
Carbon disulfide	ND	0.200	--	ND	0.622	--		1
Carbon tetrachloride	ND	0.200	--	ND	1.26	--		1
Chlorobenzene	ND	0.200	--	ND	0.920	--		1

Project Name:	CITY OF NEW BEDFORD	***Lab Number:***	L1005748
Project Number:	115058	***Report Date:***	05/11/10

SAMPLE RESULTS

Lab ID:	L1005748-03	Date Collected:	04/20/10 09:05
Client ID:	TRC-IA-6	Date Received:	04/21/10
Sample Location:	NBHS	Field Prep:	Not Specified

	ppbV			ug/m3				
Parameter	**Results**	**RL**	**MDL**	**Results**	**RL**	**MDL**	**Qualifier**	**Dilution Factor**
Volatile Organics in Air (Low Level) - Mansfield Lab								
Chloroethane	ND	0.200	--	ND	0.527	--		1
Chloroform	ND	0.200	--	ND	0.976	--		1
Chloromethane	0.747	0.200	--	1.54	0.413	--		1
cis-1,2-Dichloroethene	ND	0.200	--	ND	0.792	--		1
cis-1,3-Dichloropropene	ND	0.200	--	ND	0.907	--		1
Dibromochloromethane	ND	0.200	--	ND	1.70	--		1
Dichlorodifluoromethane	0.625	0.200	--	3.09	0.988	--		1
Ethylbenzene	ND	0.200	--	ND	0.868	--		1
Hexachlorobutadiene	ND	0.200	--	ND	2.13	--		1
Methylene chloride	ND	0.500	--	ND	1.74	--		1
4-Methyl-2-pentanone	ND	0.200	--	ND	0.819	--		1
Methyl tert butyl ether	ND	0.200	--	ND	0.720	--		1
p/m-Xylene	ND	0.400	--	ND	1.74	--		1
o-Xylene	ND	0.200	--	ND	0.868	--		1
Styrene	ND	0.200	--	ND	0.851	--		1
Tetrachloroethene	ND	0.200	--	ND	1.36	--		1
Tetrahydrofuran	ND	0.200	--	ND	0.589	--		1
Toluene	0.232	0.200	--	0.874	0.753	--		1
trans-1,2-Dichloroethene	ND	0.200	--	ND	0.792	--		1
trans-1,3-Dichloropropene	ND	0.200	--	ND	0.907	--		1
Trichloroethene	ND	0.200	--	ND	1.07	--		1
Trichlorofluoromethane	0.279	0.200	--	1.57	1.12	--		1
Vinyl chloride	ND	0.200	--	ND	0.511	--		1
Naphthalene	ND	0.200	--	ND	1.05	--		1
1,1,1,2-Tetrachloroethane	ND	0.200	--	ND	1.37	--		1
Isopropylbenzene	ND	0.200	--	ND	0.982	--		1
1,2,3-Trichloropropane	ND	0.200	--	ND	1.20	--		1
Bromobenzene	ND	0.200	--	ND	1.28	--		1

Project Name:	CITY OF NEW BEDFORD	***Lab Number:***	L1005748
Project Number:	115058	***Report Date:***	05/11/10

SAMPLE RESULTS

Lab ID:	L1005748-03	Date Collected:	04/20/10 09:05
Client ID:	TRC-IA-6	Date Received:	04/21/10
Sample Location:	NBHS	Field Prep:	Not Specified

	ppbV			ug/m3				
Parameter	**Results**	**RL**	**MDL**	**Results**	**RL**	**MDL**	**Qualifier**	**Dilution Factor**
Volatile Organics in Air (Low Level) - Mansfield Lab								
Dibromomethane	ND	0.200	--	ND	1.42	--		1
tert-Amyl Methyl Ether	ND	0.200	--	ND	0.835	--		1
2-Chlorotoluene	ND	0.200	--	ND	1.03	--		1
4-Chlorotoluene	ND	0.200	--	ND	1.03	--		1
2,2-Dichloropropane	ND	0.200	--	ND	0.923	--		1
1,1-Dichloropropene	ND	0.200	--	ND	0.907	--		1
Diisopropyl ether	ND	0.200	--	ND	0.835	--		1
tert-Butyl Ethyl Ether	ND	0.200	--	ND	0.835	--		1
1,2,3-Trichlorobenzene	ND	0.200	--	ND	1.48	--		1
Ethyl ether	ND	0.200	--	ND	0.606	--		1
n-Butylbenzene	ND	0.200	--	ND	1.10	--		1
sec-Butylbenzene	ND	0.200	--	ND	1.10	--		1
tert-Butylbenzene	ND	0.200	--	ND	1.10	--		1
1,2-Dibromo-3-chloropropane	ND	0.200	--	ND	1.93	--		1
p-Isopropyltoluene	ND	0.200	--	ND	1.10	--		1
n-Propylbenzene	ND	0.200	--	ND	0.982	--		1
1,3-Dichloropropane	ND	0.200	--	ND	0.923	--		1

Project Name:	CITY OF NEW BEDFORD	***Lab Number:***	L1005748
Project Number:	115058	***Report Date:***	05/11/10

SAMPLE RESULTS

Lab ID:	L1005748-03	Date Collected:	04/20/10 09:05
Client ID:	TRC-IA-6	Date Received:	04/21/10
Sample Location:	NBHS	Field Prep:	Not Specified
Matrix:	Air		
Anaytical Method:	48,TO-15-SIM		
Analytical Date:	04/24/10 18:29		
Analyst:	AJ		

	ppbV			ug/m3				
Parameter	**Results**	**RL**	**MDL**	**Results**	**RL**	**MDL**	**Qualifier**	**Dilution Factor**
Volatile Organics in Air by SIM - Mansfield Lab								
Vinyl chloride	ND	0.020	--	ND	0.051	--		1
trans-1,2-Dichloroethene	ND	0.020	--	ND	0.079	--		1
cis-1,2-Dichloroethene	0.026	0.020	--	0.103	0.079	--		1
Chloroform	ND	0.020	--	ND	0.098	--		1
1,2-Dichloroethane	ND	0.020	--	ND	0.081	--		1
Benzene	0.127	0.100	--	0.405	0.319	--		1
Carbon tetrachloride	0.100	0.020	--	0.629	0.126	--		1
1,2-Dichloropropane	ND	0.020	--	ND	0.092	--		1
Bromodichloromethane	ND	0.020	--	ND	0.134	--		1
Trichloroethene	0.032	0.020	--	0.172	0.107	--		1
1,4-Dioxane	ND	0.100	--	ND	0.360	--		1
cis-1,3-Dichloropropene	ND	0.020	--	ND	0.091	--		1
trans-1,3-Dichloropropene	ND	0.020	--	ND	0.091	--		1
1,1,2-Trichloroethane	ND	0.020	--	ND	0.109	--		1
Dibromochloromethane	ND	0.020	--	ND	0.096	--		1
1,2-Dibromoethane	ND	0.020	--	ND	0.154	--		1
Tetrachloroethene	ND	0.020	--	ND	0.136	--		1
1,1,2,2-Tetrachloroethane	ND	0.020	--	ND	0.137	--		1
1,4-Dichlorobenzene	ND	0.020	--	ND	0.120	--		1
Naphthalene	ND	0.050	--	ND	0.262	--		1
Hexachlorobutadiene	ND	0.050	--	ND	0.192	--		1

Project Name:	CITY OF NEW BEDFORD	***Lab Number:***	L1005748
Project Number:	115058	***Report Date:***	05/11/10

SAMPLE RESULTS

Lab ID:	L1005748-04	Date Collected:	04/20/10 09:21
Client ID:	TRC-IA-8	Date Received:	04/21/10
Sample Location:	NBHS	Field Prep:	Not Specified
Matrix:	Air		
Anaytical Method:	48,TO-15		
Analytical Date:	04/24/10 19:05		
Analyst:	AJ		

	ppbV			ug/m3				
Parameter	**Results**	**RL**	**MDL**	**Results**	**RL**	**MDL**	**Qualifier**	**Dilution Factor**
Volatile Organics in Air (Low Level) - Mansfield Lab								
1,1,1-Trichloroethane	ND	0.200	--	ND	1.09	--		1
1,1,2,2-Tetrachloroethane	ND	0.200	--	ND	1.37	--		1
1,1,2-Trichloroethane	ND	0.200	--	ND	1.09	--		1
1,1-Dichloroethane	ND	0.200	--	ND	0.809	--		1
1,1-Dichloroethene	ND	0.200	--	ND	0.792	--		1
1,2,4-Trichlorobenzene	ND	0.200	--	ND	1.48	--		1
1,2,4-Trimethylbenzene	ND	0.200	--	ND	0.982	--		1
1,2-Dibromoethane	ND	0.200	--	ND	1.54	--		1
1,2-Dichlorobenzene	ND	0.200	--	ND	1.20	--		1
1,2-Dichloroethane	ND	0.200	--	ND	0.809	--		1
1,2-Dichloropropane	ND	0.200	--	ND	0.924	--		1
1,3,5-Trimethybenzene	ND	0.200	--	ND	0.982	--		1
1,3-Dichlorobenzene	ND	0.200	--	ND	1.20	--		1
1,4-Dichlorobenzene	ND	0.200	--	ND	1.20	--		1
1,4-Dioxane	ND	0.200	--	ND	0.720	--		1
2-Butanone	0.313	0.200	--	0.922	0.589	--		1
2-Hexanone	ND	0.200	--	ND	0.819	--		1
Acetone	3.19	1.00	--	7.56	2.37	--		1
Benzene	ND	0.200	--	ND	0.638	--		1
Bromodichloromethane	ND	0.200	--	ND	1.34	--		1
Bromoform	ND	0.200	--	ND	2.06	--		1
Bromomethane	ND	0.200	--	ND	0.776	--		1
Carbon disulfide	ND	0.200	--	ND	0.622	--		1
Carbon tetrachloride	ND	0.200	--	ND	1.26	--		1
Chlorobenzene	ND	0.200	--	ND	0.920	--		1

Project Name:	CITY OF NEW BEDFORD	***Lab Number:***	L1005748
Project Number:	115058	***Report Date:***	05/11/10

SAMPLE RESULTS

Lab ID:	L1005748-04	Date Collected:	04/20/10 09:21
Client ID:	TRC-IA-8	Date Received:	04/21/10
Sample Location:	NBHS	Field Prep:	Not Specified

	ppbV			ug/m3				
Parameter	**Results**	**RL**	**MDL**	**Results**	**RL**	**MDL**	**Qualifier**	**Dilution Factor**
Volatile Organics in Air (Low Level) - Mansfield Lab								
Chloroethane	ND	0.200	--	ND	0.527	--		1
Chloroform	ND	0.200	--	ND	0.976	--		1
Chloromethane	0.527	0.200	--	1.09	0.413	--		1
cis-1,2-Dichloroethene	ND	0.200	--	ND	0.792	--		1
cis-1,3-Dichloropropene	ND	0.200	--	ND	0.907	--		1
Dibromochloromethane	ND	0.200	--	ND	1.70	--		1
Dichlorodifluoromethane	0.467	0.200	--	2.31	0.988	--		1
Ethylbenzene	ND	0.200	--	ND	0.868	--		1
Hexachlorobutadiene	ND	0.200	--	ND	2.13	--		1
Methylene chloride	ND	0.500	--	ND	1.74	--		1
4-Methyl-2-pentanone	ND	0.200	--	ND	0.819	--		1
Methyl tert butyl ether	ND	0.200	--	ND	0.720	--		1
p/m-Xylene	ND	0.400	--	ND	1.74	--		1
o-Xylene	ND	0.200	--	ND	0.868	--		1
Styrene	ND	0.200	--	ND	0.851	--		1
Tetrachloroethene	ND	0.200	--	ND	1.36	--		1
Tetrahydrofuran	ND	0.200	--	ND	0.589	--		1
Toluene	ND	0.200	--	ND	0.753	--		1
trans-1,2-Dichloroethene	ND	0.200	--	ND	0.792	--		1
trans-1,3-Dichloropropene	ND	0.200	--	ND	0.907	--		1
Trichloroethene	ND	0.200	--	ND	1.07	--		1
Trichlorofluoromethane	0.223	0.200	--	1.25	1.12	--		1
Vinyl chloride	ND	0.200	--	ND	0.511	--		1
Naphthalene	ND	0.200	--	ND	1.05	--		1
1,1,1,2-Tetrachloroethane	ND	0.200	--	ND	1.37	--		1
Isopropylbenzene	ND	0.200	--	ND	0.982	--		1
1,2,3-Trichloropropane	ND	0.200	--	ND	1.20	--		1
Bromobenzene	ND	0.200	--	ND	1.28	--		1

Project Name:	CITY OF NEW BEDFORD	***Lab Number:***	L1005748
Project Number:	115058	***Report Date:***	05/11/10

SAMPLE RESULTS

Lab ID:	L1005748-04	Date Collected:	04/20/10 09:21
Client ID:	TRC-IA-8	Date Received:	04/21/10
Sample Location:	NBHS	Field Prep:	Not Specified

	ppbV			ug/m3				
Parameter	**Results**	**RL**	**MDL**	**Results**	**RL**	**MDL**	**Qualifier**	**Dilution Factor**
Volatile Organics in Air (Low Level) - Mansfield Lab								
Dibromomethane	ND	0.200	--	ND	1.42	--		1
tert-Amyl Methyl Ether	ND	0.200	--	ND	0.835	--		1
2-Chlorotoluene	ND	0.200	--	ND	1.03	--		1
4-Chlorotoluene	ND	0.200	--	ND	1.03	--		1
2,2-Dichloropropane	ND	0.200	--	ND	0.923	--		1
1,1-Dichloropropene	ND	0.200	--	ND	0.907	--		1
Diisopropyl ether	ND	0.200	--	ND	0.835	--		1
tert-Butyl Ethyl Ether	ND	0.200	--	ND	0.835	--		1
1,2,3-Trichlorobenzene	ND	0.200	--	ND	1.48	--		1
Ethyl ether	ND	0.200	--	ND	0.606	--		1
n-Butylbenzene	ND	0.200	--	ND	1.10	--		1
sec-Butylbenzene	ND	0.200	--	ND	1.10	--		1
tert-Butylbenzene	ND	0.200	--	ND	1.10	--		1
1,2-Dibromo-3-chloropropane	ND	0.200	--	ND	1.93	--		1
p-Isopropyltoluene	ND	0.200	--	ND	1.10	--		1
n-Propylbenzene	ND	0.200	--	ND	0.982	--		1
1,3-Dichloropropane	ND	0.200	--	ND	0.923	--		1

Project Name:	CITY OF NEW BEDFORD	***Lab Number:***	L1005748
Project Number:	115058	***Report Date:***	05/11/10

SAMPLE RESULTS

Lab ID:	L1005748-04	Date Collected:	04/20/10 09:21
Client ID:	TRC-IA-8	Date Received:	04/21/10
Sample Location:	NBHS	Field Prep:	Not Specified
Matrix:	Air		
Anaytical Method:	48,TO-15-SIM		
Analytical Date:	04/24/10 19:05		
Analyst:	AJ		

	ppbV			ug/m3				
Parameter	**Results**	**RL**	**MDL**	**Results**	**RL**	**MDL**	**Qualifier**	**Dilution Factor**
Volatile Organics in Air by SIM - Mansfield Lab								
Vinyl chloride	ND	0.020	--	ND	0.051	--		1
trans-1,2-Dichloroethene	ND	0.020	--	ND	0.079	--		1
cis-1,2-Dichloroethene	ND	0.020	--	ND	0.079	--		1
Chloroform	ND	0.020	--	ND	0.098	--		1
1,2-Dichloroethane	ND	0.020	--	ND	0.081	--		1
Benzene	ND	0.100	--	ND	0.319	--		1
Carbon tetrachloride	0.077	0.020	--	0.484	0.126	--		1
1,2-Dichloropropane	ND	0.020	--	ND	0.092	--		1
Bromodichloromethane	ND	0.020	--	ND	0.134	--		1
Trichloroethene	ND	0.020	--	ND	0.107	--		1
1,4-Dioxane	ND	0.100	--	ND	0.360	--		1
cis-1,3-Dichloropropene	ND	0.020	--	ND	0.091	--		1
trans-1,3-Dichloropropene	ND	0.020	--	ND	0.091	--		1
1,1,2-Trichloroethane	ND	0.020	--	ND	0.109	--		1
Dibromochloromethane	ND	0.020	--	ND	0.096	--		1
1,2-Dibromoethane	ND	0.020	--	ND	0.154	--		1
Tetrachloroethene	ND	0.020	--	ND	0.136	--		1
1,1,2,2-Tetrachloroethane	ND	0.020	--	ND	0.137	--		1
1,4-Dichlorobenzene	ND	0.020	--	ND	0.120	--		1
Naphthalene	ND	0.050	--	ND	0.262	--		1
Hexachlorobutadiene	ND	0.050	--	ND	0.192	--		1

Project Name:	CITY OF NEW BEDFORD	***Lab Number:***	L1005748
Project Number:	115058	***Report Date:***	05/11/10

SAMPLE RESULTS

Lab ID:	L1005748-05	Date Collected:	04/20/10 09:23
Client ID:	TRC-IA-5	Date Received:	04/21/10
Sample Location:	NBHS	Field Prep:	Not Specified
Matrix:	Air		
Anaytical Method:	48,TO-15		
Analytical Date:	04/24/10 19:41		
Analyst:	AJ		

	ppbV			ug/m3				
Parameter	**Results**	**RL**	**MDL**	**Results**	**RL**	**MDL**	**Qualifier**	**Dilution Factor**
Volatile Organics in Air (Low Level) - Mansfield Lab								
1,1,1-Trichloroethane	ND	0.200	--	ND	1.09	--		1
1,1,2,2-Tetrachloroethane	ND	0.200	--	ND	1.37	--		1
1,1,2-Trichloroethane	ND	0.200	--	ND	1.09	--		1
1,1-Dichloroethane	ND	0.200	--	ND	0.809	--		1
1,1-Dichloroethene	ND	0.200	--	ND	0.792	--		1
1,2,4-Trichlorobenzene	ND	0.200	--	ND	1.48	--		1
1,2,4-Trimethylbenzene	ND	0.200	--	ND	0.982	--		1
1,2-Dibromoethane	ND	0.200	--	ND	1.54	--		1
1,2-Dichlorobenzene	ND	0.200	--	ND	1.20	--		1
1,2-Dichloroethane	ND	0.200	--	ND	0.809	--		1
1,2-Dichloropropane	ND	0.200	--	ND	0.924	--		1
1,3,5-Trimethybenzene	ND	0.200	--	ND	0.982	--		1
1,3-Dichlorobenzene	ND	0.200	--	ND	1.20	--		1
1,4-Dichlorobenzene	ND	0.200	--	ND	1.20	--		1
1,4-Dioxane	ND	0.200	--	ND	0.720	--		1
2-Butanone	ND	0.200	--	ND	0.589	--		1
2-Hexanone	ND	0.200	--	ND	0.819	--		1
Acetone	2.04	1.00	--	4.83	2.37	--		1
Benzene	ND	0.200	--	ND	0.638	--		1
Bromodichloromethane	ND	0.200	--	ND	1.34	--		1
Bromoform	ND	0.200	--	ND	2.06	--		1
Bromomethane	ND	0.200	--	ND	0.776	--		1
Carbon disulfide	ND	0.200	--	ND	0.622	--		1
Carbon tetrachloride	ND	0.200	--	ND	1.26	--		1
Chlorobenzene	ND	0.200	--	ND	0.920	--		1

Project Name:	CITY OF NEW BEDFORD	***Lab Number:***	L1005748
Project Number:	115058	***Report Date:***	05/11/10

SAMPLE RESULTS

Lab ID:	L1005748-05	Date Collected:	04/20/10 09:23
Client ID:	TRC-IA-5	Date Received:	04/21/10
Sample Location:	NBHS	Field Prep:	Not Specified

	ppbV			ug/m3				
Parameter	**Results**	**RL**	**MDL**	**Results**	**RL**	**MDL**	**Qualifier**	**Dilution Factor**
Volatile Organics in Air (Low Level) - Mansfield Lab								
Chloroethane	ND	0.200	--	ND	0.527	--		1
Chloroform	ND	0.200	--	ND	0.976	--		1
Chloromethane	0.624	0.200	--	1.29	0.413	--		1
cis-1,2-Dichloroethene	ND	0.200	--	ND	0.792	--		1
cis-1,3-Dichloropropene	ND	0.200	--	ND	0.907	--		1
Dibromochloromethane	ND	0.200	--	ND	1.70	--		1
Dichlorodifluoromethane	0.517	0.200	--	2.55	0.988	--		1
Ethylbenzene	ND	0.200	--	ND	0.868	--		1
Hexachlorobutadiene	ND	0.200	--	ND	2.13	--		1
Methylene chloride	ND	0.500	--	ND	1.74	--		1
4-Methyl-2-pentanone	ND	0.200	--	ND	0.819	--		1
Methyl tert butyl ether	ND	0.200	--	ND	0.720	--		1
p/m-Xylene	ND	0.400	--	ND	1.74	--		1
o-Xylene	ND	0.200	--	ND	0.868	--		1
Styrene	ND	0.200	--	ND	0.851	--		1
Tetrachloroethene	ND	0.200	--	ND	1.36	--		1
Tetrahydrofuran	ND	0.200	--	ND	0.589	--		1
Toluene	ND	0.200	--	ND	0.753	--		1
trans-1,2-Dichloroethene	ND	0.200	--	ND	0.792	--		1
trans-1,3-Dichloropropene	ND	0.200	--	ND	0.907	--		1
Trichloroethene	ND	0.200	--	ND	1.07	--		1
Trichlorofluoromethane	0.244	0.200	--	1.37	1.12	--		1
Vinyl chloride	ND	0.200	--	ND	0.511	--		1
Naphthalene	ND	0.200	--	ND	1.05	--		1
1,1,1,2-Tetrachloroethane	ND	0.200	--	ND	1.37	--		1
Isopropylbenzene	ND	0.200	--	ND	0.982	--		1
1,2,3-Trichloropropane	ND	0.200	--	ND	1.20	--		1
Bromobenzene	ND	0.200	--	ND	1.28	--		1

Project Name:	CITY OF NEW BEDFORD	***Lab Number:***	L1005748
Project Number:	115058	***Report Date:***	05/11/10

SAMPLE RESULTS

Lab ID:	L1005748-05	Date Collected:	04/20/10 09:23
Client ID:	TRC-IA-5	Date Received:	04/21/10
Sample Location:	NBHS	Field Prep:	Not Specified

	ppbV			ug/m3				
Parameter	**Results**	**RL**	**MDL**	**Results**	**RL**	**MDL**	**Qualifier**	**Dilution Factor**
Volatile Organics in Air (Low Level) - Mansfield Lab								
Dibromomethane	ND	0.200	--	ND	1.42	--		1
tert-Amyl Methyl Ether	ND	0.200	--	ND	0.835	--		1
2-Chlorotoluene	ND	0.200	--	ND	1.03	--		1
4-Chlorotoluene	ND	0.200	--	ND	1.03	--		1
2,2-Dichloropropane	ND	0.200	--	ND	0.923	--		1
1,1-Dichloropropene	ND	0.200	--	ND	0.907	--		1
Diisopropyl ether	ND	0.200	--	ND	0.835	--		1
tert-Butyl Ethyl Ether	ND	0.200	--	ND	0.835	--		1
1,2,3-Trichlorobenzene	ND	0.200	--	ND	1.48	--		1
Ethyl ether	ND	0.200	--	ND	0.606	--		1
n-Butylbenzene	ND	0.200	--	ND	1.10	--		1
sec-Butylbenzene	ND	0.200	--	ND	1.10	--		1
tert-Butylbenzene	ND	0.200	--	ND	1.10	--		1
1,2-Dibromo-3-chloropropane	ND	0.200	--	ND	1.93	--		1
p-Isopropyltoluene	ND	0.200	--	ND	1.10	--		1
n-Propylbenzene	ND	0.200	--	ND	0.982	--		1
1,3-Dichloropropane	ND	0.200	--	ND	0.923	--		1

Project Name:	CITY OF NEW BEDFORD	***Lab Number:***	L1005748
Project Number:	115058	***Report Date:***	05/11/10

SAMPLE RESULTS

Lab ID:	L1005748-05	Date Collected:	04/20/10 09:23
Client ID:	TRC-IA-5	Date Received:	04/21/10
Sample Location:	NBHS	Field Prep:	Not Specified
Matrix:	Air		
Anaytical Method:	48,TO-15-SIM		
Analytical Date:	04/24/10 19:41		
Analyst:	AJ		

	ppbV			ug/m3				
Parameter	**Results**	**RL**	**MDL**	**Results**	**RL**	**MDL**	**Qualifier**	**Dilution Factor**
Volatile Organics in Air by SIM - Mansfield Lab								
Vinyl chloride	ND	0.020	--	ND	0.051	--		1
trans-1,2-Dichloroethene	ND	0.020	--	ND	0.079	--		1
cis-1,2-Dichloroethene	ND	0.020	--	ND	0.079	--		1
Chloroform	ND	0.020	--	ND	0.098	--		1
1,2-Dichloroethane	ND	0.020	--	ND	0.081	--		1
Benzene	0.108	0.100	--	0.345	0.319	--		1
Carbon tetrachloride	0.090	0.020	--	0.566	0.126	--		1
1,2-Dichloropropane	ND	0.020	--	ND	0.092	--		1
Bromodichloromethane	ND	0.020	--	ND	0.134	--		1
Trichloroethene	ND	0.020	--	ND	0.107	--		1
1,4-Dioxane	ND	0.100	--	ND	0.360	--		1
cis-1,3-Dichloropropene	ND	0.020	--	ND	0.091	--		1
trans-1,3-Dichloropropene	ND	0.020	--	ND	0.091	--		1
1,1,2-Trichloroethane	ND	0.020	--	ND	0.109	--		1
Dibromochloromethane	ND	0.020	--	ND	0.096	--		1
1,2-Dibromoethane	ND	0.020	--	ND	0.154	--		1
Tetrachloroethene	ND	0.020	--	ND	0.136	--		1
1,1,2,2-Tetrachloroethane	ND	0.020	--	ND	0.137	--		1
1,4-Dichlorobenzene	ND	0.020	--	ND	0.120	--		1
Naphthalene	ND	0.050	--	ND	0.262	--		1
Hexachlorobutadiene	ND	0.050	--	ND	0.192	--		1

Project Name:	CITY OF NEW BEDFORD	***Lab Number:***	L1005748
Project Number:	115058	***Report Date:***	05/11/10

SAMPLE RESULTS

Lab ID:	L1005748-06	Date Collected:	04/20/10 10:12
Client ID:	PVP-2	Date Received:	04/21/10
Sample Location:	NBHS	Field Prep:	Not Specified
Matrix:	Soil_Vapor		
Anaytical Method:	48,TO-15		
Analytical Date:	04/24/10 15:40		
Analyst:	AJ		

	ppbV			ug/m3				
Parameter	**Results**	**RL**	**MDL**	**Results**	**RL**	**MDL**	**Qualifier**	**Dilution Factor**
Volatile Organics in Air (Low Level) - Mansfield Lab								
1,1,1-Trichloroethane	ND	0.200	--	ND	1.09	--		1
1,1,2,2-Tetrachloroethane	ND	0.200	--	ND	1.37	--		1
1,1,2-Trichloroethane	ND	0.200	--	ND	1.09	--		1
1,1-Dichloroethane	ND	0.200	--	ND	0.809	--		1
1,1-Dichloroethene	ND	0.200	--	ND	0.792	--		1
1,2,4-Trichlorobenzene	ND	0.200	--	ND	1.48	--		1
1,2,4-Trimethylbenzene	ND	0.200	--	ND	0.982	--		1
1,2-Dibromoethane	ND	0.200	--	ND	1.54	--		1
1,2-Dichlorobenzene	ND	0.200	--	ND	1.20	--		1
1,2-Dichloroethane	ND	0.200	--	ND	0.809	--		1
1,2-Dichloropropane	ND	0.200	--	ND	0.924	--		1
1,3,5-Trimethybenzene	ND	0.200	--	ND	0.982	--		1
1,3-Dichlorobenzene	ND	0.200	--	ND	1.20	--		1
1,4-Dichlorobenzene	ND	0.200	--	ND	1.20	--		1
1,4-Dioxane	ND	0.200	--	ND	0.720	--		1
2-Butanone	1.03	0.200	--	3.04	0.589	--		1
2-Hexanone	ND	0.200	--	ND	0.819	--		1
Acetone	10.3	1.00	--	24.5	2.37	--		1
Benzene	ND	0.200	--	ND	0.638	--		1
Bromodichloromethane	ND	0.200	--	ND	1.34	--		1
Bromoform	ND	0.200	--	ND	2.06	--		1
Bromomethane	ND	0.200	--	ND	0.776	--		1
Carbon disulfide	0.350	0.200	--	1.09	0.622	--		1
Carbon tetrachloride	ND	0.200	--	ND	1.26	--		1
Chlorobenzene	ND	0.200	--	ND	0.920	--		1

Project Name:	CITY OF NEW BEDFORD	***Lab Number:***	L1005748
Project Number:	115058	***Report Date:***	05/11/10

SAMPLE RESULTS

Lab ID:	L1005748-06	Date Collected:	04/20/10 10:12
Client ID:	PVP-2	Date Received:	04/21/10
Sample Location:	NBHS	Field Prep:	Not Specified

	ppbV			ug/m3				
Parameter	**Results**	**RL**	**MDL**	**Results**	**RL**	**MDL**	**Qualifier**	**Dilution Factor**
Volatile Organics in Air (Low Level) - Mansfield Lab								
Chloroethane	ND	0.200	--	ND	0.527	--		1
Chloroform	ND	0.200	--	ND	0.976	--		1
Chloromethane	ND	0.200	--	ND	0.413	--		1
cis-1,2-Dichloroethene	ND	0.200	--	ND	0.792	--		1
cis-1,3-Dichloropropene	ND	0.200	--	ND	0.907	--		1
Dibromochloromethane	ND	0.200	--	ND	1.70	--		1
Dichlorodifluoromethane	0.562	0.200	--	2.78	0.988	--		1
Ethylbenzene	ND	0.200	--	ND	0.868	--		1
Hexachlorobutadiene	ND	0.200	--	ND	2.13	--		1
Methylene chloride	ND	0.500	--	ND	1.74	--		1
4-Methyl-2-pentanone	ND	0.200	--	ND	0.819	--		1
Methyl tert butyl ether	ND	0.200	--	ND	0.720	--		1
p/m-Xylene	ND	0.400	--	ND	1.74	--		1
o-Xylene	ND	0.200	--	ND	0.868	--		1
Styrene	ND	0.200	--	ND	0.851	--		1
Tetrachloroethene	0.328	0.200	--	2.22	1.36	--		1
Tetrahydrofuran	ND	0.200	--	ND	0.589	--		1
Toluene	ND	0.200	--	ND	0.753	--		1
trans-1,2-Dichloroethene	ND	0.200	--	ND	0.792	--		1
trans-1,3-Dichloropropene	ND	0.200	--	ND	0.907	--		1
Trichloroethene	ND	0.200	--	ND	1.07	--		1
Trichlorofluoromethane	0.272	0.200	--	1.53	1.12	--		1
Vinyl chloride	ND	0.200	--	ND	0.511	--		1
Naphthalene	ND	0.200	--	ND	1.05	--		1
1,1,1,2-Tetrachloroethane	ND	0.200	--	ND	1.37	--		1
Isopropylbenzene	ND	0.200	--	ND	0.982	--		1
1,2,3-Trichloropropane	ND	0.200	--	ND	1.20	--		1
Bromobenzene	ND	0.200	--	ND	1.28	--		1

Project Name: CITY OF NEW BEDFORD **Lab Number:** L1005748

Project Number: 115058 **Report Date:** 05/11/10

SAMPLE RESULTS

Lab ID: L1005748-06 Date Collected: 04/20/10 10:12

Client ID: PVP-2 Date Received: 04/21/10

Sample Location: NBHS Field Prep: Not Specified

Parameter	ppbV Results	ppbV RL	ppbV MDL	ug/m3 Results	ug/m3 RL	ug/m3 MDL	Qualifier	Dilution Factor
Volatile Organics in Air (Low Level) - Mansfield Lab								
Dibromomethane	ND	0.200	--	ND	1.42	--		1
tert-Amyl Methyl Ether	ND	0.200	--	ND	0.835	--		1
2-Chlorotoluene	ND	0.200	--	ND	1.03	--		1
4-Chlorotoluene	ND	0.200	--	ND	1.03	--		1
2,2-Dichloropropane	ND	0.200	--	ND	0.923	--		1
1,1-Dichloropropene	ND	0.200	--	ND	0.907	--		1
Diisopropyl ether	ND	0.200	--	ND	0.835	--		1
tert-Butyl Ethyl Ether	ND	0.200	--	ND	0.835	--		1
1,2,3-Trichlorobenzene	ND	0.200	--	ND	1.48	--		1
Ethyl ether	ND	0.200	--	ND	0.606	--		1
n-Butylbenzene	ND	0.200	--	ND	1.10	--		1
sec-Butylbenzene	ND	0.200	--	ND	1.10	--		1
tert-Butylbenzene	ND	0.200	--	ND	1.10	--		1
1,2-Dibromo-3-chloropropane	ND	0.200	--	ND	1.93	--		1
p-Isopropyltoluene	ND	0.200	--	ND	1.10	--		1
n-Propylbenzene	ND	0.200	--	ND	0.982	--		1
1,3-Dichloropropane	ND	0.200	--	ND	0.923	--		1

Project Name:	CITY OF NEW BEDFORD	***Lab Number:***	L1005748
Project Number:	115058	***Report Date:***	05/11/10

SAMPLE RESULTS

Lab ID:	L1005748-07	Date Collected:	04/20/10 10:29
Client ID:	PVP-3	Date Received:	04/21/10
Sample Location:	NBHS	Field Prep:	Not Specified
Matrix:	Soil_Vapor		
Anaytical Method:	48,TO-15		
Analytical Date:	04/24/10 16:19		
Analyst:	AJ		

	ppbV			ug/m3				
Parameter	**Results**	**RL**	**MDL**	**Results**	**RL**	**MDL**	**Qualifier**	**Dilution Factor**
Volatile Organics in Air (Low Level) - Mansfield Lab								
1,1,1-Trichloroethane	ND	0.200	--	ND	1.09	--		1
1,1,2,2-Tetrachloroethane	ND	0.200	--	ND	1.37	--		1
1,1,2-Trichloroethane	ND	0.200	--	ND	1.09	--		1
1,1-Dichloroethane	ND	0.200	--	ND	0.809	--		1
1,1-Dichloroethene	ND	0.200	--	ND	0.792	--		1
1,2,4-Trichlorobenzene	ND	0.200	--	ND	1.48	--		1
1,2,4-Trimethylbenzene	ND	0.200	--	ND	0.982	--		1
1,2-Dibromoethane	ND	0.200	--	ND	1.54	--		1
1,2-Dichlorobenzene	ND	0.200	--	ND	1.20	--		1
1,2-Dichloroethane	ND	0.200	--	ND	0.809	--		1
1,2-Dichloropropane	ND	0.200	--	ND	0.924	--		1
1,3,5-Trimethybenzene	ND	0.200	--	ND	0.982	--		1
1,3-Dichlorobenzene	ND	0.200	--	ND	1.20	--		1
1,4-Dichlorobenzene	ND	0.200	--	ND	1.20	--		1
1,4-Dioxane	ND	0.200	--	ND	0.720	--		1
2-Butanone	1.85	0.200	--	5.45	0.589	--		1
2-Hexanone	ND	0.200	--	ND	0.819	--		1
Acetone	12.6	1.00	--	29.8	2.37	--		1
Benzene	ND	0.200	--	ND	0.638	--		1
Bromodichloromethane	ND	0.200	--	ND	1.34	--		1
Bromoform	ND	0.200	--	ND	2.06	--		1
Bromomethane	ND	0.200	--	ND	0.776	--		1
Carbon disulfide	ND	0.200	--	ND	0.622	--		1
Carbon tetrachloride	ND	0.200	--	ND	1.26	--		1
Chlorobenzene	ND	0.200	--	ND	0.920	--		1

Project Name: CITY OF NEW BEDFORD **Lab Number:** L1005748

Project Number: 115058 **Report Date:** 05/11/10

SAMPLE RESULTS

Lab ID: L1005748-07 Date Collected: 04/20/10 10:29

Client ID: PVP-3 Date Received: 04/21/10

Sample Location: NBHS Field Prep: Not Specified

Parameter	ppbV Results	ppbV RL	ppbV MDL	ug/m3 Results	ug/m3 RL	ug/m3 MDL	Qualifier	Dilution Factor
Volatile Organics in Air (Low Level) - Mansfield Lab								
Chloroethane	ND	0.200	--	ND	0.527	--		1
Chloroform	ND	0.200	--	ND	0.976	--		1
Chloromethane	ND	0.200	--	ND	0.413	--		1
cis-1,2-Dichloroethene	ND	0.200	--	ND	0.792	--		1
cis-1,3-Dichloropropene	ND	0.200	--	ND	0.907	--		1
Dibromochloromethane	ND	0.200	--	ND	1.70	--		1
Dichlorodifluoromethane	0.529	0.200	--	2.61	0.988	--		1
Ethylbenzene	ND	0.200	--	ND	0.868	--		1
Hexachlorobutadiene	ND	0.200	--	ND	2.13	--		1
Methylene chloride	ND	0.500	--	ND	1.74	--		1
4-Methyl-2-pentanone	ND	0.200	--	ND	0.819	--		1
Methyl tert butyl ether	ND	0.200	--	ND	0.720	--		1
p/m-Xylene	ND	0.400	--	ND	1.74	--		1
o-Xylene	ND	0.200	--	ND	0.868	--		1
Styrene	ND	0.200	--	ND	0.851	--		1
Tetrachloroethene	0.261	0.200	--	1.77	1.36	--		1
Tetrahydrofuran	ND	0.200	--	ND	0.589	--		1
Toluene	ND	0.200	--	ND	0.753	--		1
trans-1,2-Dichloroethene	ND	0.200	--	ND	0.792	--		1
trans-1,3-Dichloropropene	ND	0.200	--	ND	0.907	--		1
Trichloroethene	ND	0.200	--	ND	1.07	--		1
Trichlorofluoromethane	0.261	0.200	--	1.46	1.12	--		1
Vinyl chloride	ND	0.200	--	ND	0.511	--		1
Naphthalene	ND	0.200	--	ND	1.05	--		1
1,1,1,2-Tetrachloroethane	ND	0.200	--	ND	1.37	--		1
Isopropylbenzene	ND	0.200	--	ND	0.982	--		1
1,2,3-Trichloropropane	ND	0.200	--	ND	1.20	--		1
Bromobenzene	ND	0.200	--	ND	1.28	--		1

Project Name:	CITY OF NEW BEDFORD	***Lab Number:***	L1005748
Project Number:	115058	***Report Date:***	05/11/10

SAMPLE RESULTS

Lab ID:	L1005748-07	Date Collected:	04/20/10 10:29
Client ID:	PVP-3	Date Received:	04/21/10
Sample Location:	NBHS	Field Prep:	Not Specified

	ppbV			ug/m3				
Parameter	**Results**	**RL**	**MDL**	**Results**	**RL**	**MDL**	**Qualifier**	**Dilution Factor**
Volatile Organics in Air (Low Level) - Mansfield Lab								
Dibromomethane	ND	0.200	--	ND	1.42	--		1
tert-Amyl Methyl Ether	ND	0.200	--	ND	0.835	--		1
2-Chlorotoluene	ND	0.200	--	ND	1.03	--		1
4-Chlorotoluene	ND	0.200	--	ND	1.03	--		1
2,2-Dichloropropane	ND	0.200	--	ND	0.923	--		1
1,1-Dichloropropene	ND	0.200	--	ND	0.907	--		1
Diisopropyl ether	ND	0.200	--	ND	0.835	--		1
tert-Butyl Ethyl Ether	ND	0.200	--	ND	0.835	--		1
1,2,3-Trichlorobenzene	ND	0.200	--	ND	1.48	--		1
Ethyl ether	ND	0.200	--	ND	0.606	--		1
n-Butylbenzene	ND	0.200	--	ND	1.10	--		1
sec-Butylbenzene	ND	0.200	--	ND	1.10	--		1
tert-Butylbenzene	ND	0.200	--	ND	1.10	--		1
1,2-Dibromo-3-chloropropane	ND	0.200	--	ND	1.93	--		1
p-Isopropyltoluene	ND	0.200	--	ND	1.10	--		1
n-Propylbenzene	ND	0.200	--	ND	0.982	--		1
1,3-Dichloropropane	ND	0.200	--	ND	0.923	--		1

Project Name:	CITY OF NEW BEDFORD	***Lab Number:***	L1005748
Project Number:	115058	***Report Date:***	05/11/10

SAMPLE RESULTS

Lab ID:	L1005748-08	Date Collected:	04/20/10 09:30
Client ID:	TRC-IA-10	Date Received:	04/21/10
Sample Location:	NBHS	Field Prep:	Not Specified
Matrix:	Air		
Anaytical Method:	48,TO-15		
Analytical Date:	04/24/10 20:59		
Analyst:	AJ		

	ppbV			ug/m3				
Parameter	**Results**	**RL**	**MDL**	**Results**	**RL**	**MDL**	**Qualifier**	**Dilution Factor**
Volatile Organics in Air (Low Level) - Mansfield Lab								
1,1,1-Trichloroethane	ND	0.200	--	ND	1.09	--		1
1,1,2,2-Tetrachloroethane	ND	0.200	--	ND	1.37	--		1
1,1,2-Trichloroethane	ND	0.200	--	ND	1.09	--		1
1,1-Dichloroethane	ND	0.200	--	ND	0.809	--		1
1,1-Dichloroethene	ND	0.200	--	ND	0.792	--		1
1,2,4-Trichlorobenzene	ND	0.200	--	ND	1.48	--		1
1,2,4-Trimethylbenzene	ND	0.200	--	ND	0.982	--		1
1,2-Dibromoethane	ND	0.200	--	ND	1.54	--		1
1,2-Dichlorobenzene	ND	0.200	--	ND	1.20	--		1
1,2-Dichloroethane	ND	0.200	--	ND	0.809	--		1
1,2-Dichloropropane	ND	0.200	--	ND	0.924	--		1
1,3,5-Trimethybenzene	ND	0.200	--	ND	0.982	--		1
1,3-Dichlorobenzene	ND	0.200	--	ND	1.20	--		1
1,4-Dichlorobenzene	ND	0.200	--	ND	1.20	--		1
1,4-Dioxane	ND	0.200	--	ND	0.720	--		1
2-Butanone	ND	0.200	--	ND	0.589	--		1
2-Hexanone	ND	0.200	--	ND	0.819	--		1
Acetone	1.95	1.00	--	4.64	2.37	--		1
Benzene	ND	0.200	--	ND	0.638	--		1
Bromodichloromethane	ND	0.200	--	ND	1.34	--		1
Bromoform	ND	0.200	--	ND	2.06	--		1
Bromomethane	ND	0.200	--	ND	0.776	--		1
Carbon disulfide	ND	0.200	--	ND	0.622	--		1
Carbon tetrachloride	ND	0.200	--	ND	1.26	--		1
Chlorobenzene	ND	0.200	--	ND	0.920	--		1

Project Name: CITY OF NEW BEDFORD **Lab Number:** L1005748

Project Number: 115058 **Report Date:** 05/11/10

SAMPLE RESULTS

Lab ID: L1005748-08 Date Collected: 04/20/10 09:30

Client ID: TRC-IA-10 Date Received: 04/21/10

Sample Location: NBHS Field Prep: Not Specified

Parameter	ppbV Results	ppbV RL	ppbV MDL	ug/m3 Results	ug/m3 RL	ug/m3 MDL	Qualifier	Dilution Factor
Volatile Organics in Air (Low Level) - Mansfield Lab								
Chloroethane	ND	0.200	--	ND	0.527	--		1
Chloroform	ND	0.200	--	ND	0.976	--		1
Chloromethane	0.578	0.200	--	1.19	0.413	--		1
cis-1,2-Dichloroethene	ND	0.200	--	ND	0.792	--		1
cis-1,3-Dichloropropene	ND	0.200	--	ND	0.907	--		1
Dibromochloromethane	ND	0.200	--	ND	1.70	--		1
Dichlorodifluoromethane	0.447	0.200	--	2.21	0.988	--		1
Ethylbenzene	ND	0.200	--	ND	0.868	--		1
Hexachlorobutadiene	ND	0.200	--	ND	2.13	--		1
Methylene chloride	ND	0.500	--	ND	1.74	--		1
4-Methyl-2-pentanone	ND	0.200	--	ND	0.819	--		1
Methyl tert butyl ether	ND	0.200	--	ND	0.720	--		1
p/m-Xylene	ND	0.400	--	ND	1.74	--		1
o-Xylene	ND	0.200	--	ND	0.868	--		1
Styrene	ND	0.200	--	ND	0.851	--		1
Tetrachloroethene	ND	0.200	--	ND	1.36	--		1
Tetrahydrofuran	ND	0.200	--	ND	0.589	--		1
Toluene	ND	0.200	--	ND	0.753	--		1
trans-1,2-Dichloroethene	ND	0.200	--	ND	0.792	--		1
trans-1,3-Dichloropropene	ND	0.200	--	ND	0.907	--		1
Trichloroethene	ND	0.200	--	ND	1.07	--		1
Trichlorofluoromethane	0.214	0.200	--	1.20	1.12	--		1
Vinyl chloride	ND	0.200	--	ND	0.511	--		1
Naphthalene	ND	0.200	--	ND	1.05	--		1
1,1,1,2-Tetrachloroethane	ND	0.200	--	ND	1.37	--		1
Isopropylbenzene	ND	0.200	--	ND	0.982	--		1
1,2,3-Trichloropropane	ND	0.200	--	ND	1.20	--		1
Bromobenzene	ND	0.200	--	ND	1.28	--		1

Project Name:	CITY OF NEW BEDFORD	***Lab Number:***	L1005748
Project Number:	115058	***Report Date:***	05/11/10

SAMPLE RESULTS

Lab ID:	L1005748-08	Date Collected:	04/20/10 09:30
Client ID:	TRC-IA-10	Date Received:	04/21/10
Sample Location:	NBHS	Field Prep:	Not Specified

	ppbV			ug/m3				
Parameter	**Results**	**RL**	**MDL**	**Results**	**RL**	**MDL**	**Qualifier**	**Dilution Factor**
Volatile Organics in Air (Low Level) - Mansfield Lab								
Dibromomethane	ND	0.200	--	ND	1.42	--		1
tert-Amyl Methyl Ether	ND	0.200	--	ND	0.835	--		1
2-Chlorotoluene	ND	0.200	--	ND	1.03	--		1
4-Chlorotoluene	ND	0.200	--	ND	1.03	--		1
2,2-Dichloropropane	ND	0.200	--	ND	0.923	--		1
1,1-Dichloropropene	ND	0.200	--	ND	0.907	--		1
Diisopropyl ether	ND	0.200	--	ND	0.835	--		1
tert-Butyl Ethyl Ether	ND	0.200	--	ND	0.835	--		1
1,2,3-Trichlorobenzene	ND	0.200	--	ND	1.48	--		1
Ethyl ether	ND	0.200	--	ND	0.606	--		1
n-Butylbenzene	ND	0.200	--	ND	1.10	--		1
sec-Butylbenzene	ND	0.200	--	ND	1.10	--		1
tert-Butylbenzene	ND	0.200	--	ND	1.10	--		1
1,2-Dibromo-3-chloropropane	ND	0.200	--	ND	1.93	--		1
p-Isopropyltoluene	ND	0.200	--	ND	1.10	--		1
n-Propylbenzene	ND	0.200	--	ND	0.982	--		1
1,3-Dichloropropane	ND	0.200	--	ND	0.923	--		1

Project Name:	CITY OF NEW BEDFORD	***Lab Number:***	L1005748
Project Number:	115058	***Report Date:***	05/11/10

SAMPLE RESULTS

Lab ID:	L1005748-08	Date Collected:	04/20/10 09:30
Client ID:	TRC-IA-10	Date Received:	04/21/10
Sample Location:	NBHS	Field Prep:	Not Specified
Matrix:	Air		
Anaytical Method:	48,TO-15-SIM		
Analytical Date:	04/24/10 20:59		
Analyst:	AJ		

	ppbV			ug/m3				
Parameter	**Results**	**RL**	**MDL**	**Results**	**RL**	**MDL**	**Qualifier**	**Dilution Factor**
Volatile Organics in Air by SIM - Mansfield Lab								
Vinyl chloride	ND	0.020	--	ND	0.051	--		1
trans-1,2-Dichloroethene	ND	0.020	--	ND	0.079	--		1
cis-1,2-Dichloroethene	ND	0.020	--	ND	0.079	--		1
Chloroform	ND	0.020	--	ND	0.098	--		1
1,2-Dichloroethane	ND	0.020	--	ND	0.081	--		1
Benzene	ND	0.100	--	ND	0.319	--		1
Carbon tetrachloride	0.078	0.020	--	0.490	0.126	--		1
1,2-Dichloropropane	ND	0.020	--	ND	0.092	--		1
Bromodichloromethane	ND	0.020	--	ND	0.134	--		1
Trichloroethene	ND	0.020	--	ND	0.107	--		1
1,4-Dioxane	ND	0.100	--	ND	0.360	--		1
cis-1,3-Dichloropropene	ND	0.020	--	ND	0.091	--		1
trans-1,3-Dichloropropene	ND	0.020	--	ND	0.091	--		1
1,1,2-Trichloroethane	ND	0.020	--	ND	0.109	--		1
Dibromochloromethane	ND	0.020	--	ND	0.096	--		1
1,2-Dibromoethane	ND	0.020	--	ND	0.154	--		1
Tetrachloroethene	ND	0.020	--	ND	0.136	--		1
1,1,2,2-Tetrachloroethane	ND	0.020	--	ND	0.137	--		1
1,4-Dichlorobenzene	ND	0.020	--	ND	0.120	--		1
Naphthalene	ND	0.050	--	ND	0.262	--		1
Hexachlorobutadiene	ND	0.050	--	ND	0.192	--		1

Project Name:	CITY OF NEW BEDFORD	***Lab Number:***	L1005748
Project Number:	115058	***Report Date:***	05/11/10

SAMPLE RESULTS

Lab ID:	L1005748-09	Date Collected:	04/20/10 11:05
Client ID:	PVP-4	Date Received:	04/21/10
Sample Location:	NBHS	Field Prep:	Not Specified
Matrix:	Soil_Vapor		
Anaytical Method:	48,TO-15		
Analytical Date:	04/24/10 16:57		
Analyst:	AJ		

	ppbV			ug/m3				
Parameter	**Results**	**RL**	**MDL**	**Results**	**RL**	**MDL**	**Qualifier**	**Dilution Factor**
Volatile Organics in Air (Low Level) - Mansfield Lab								
1,1,1-Trichloroethane	ND	0.200	--	ND	1.09	--		1
1,1,2,2-Tetrachloroethane	ND	0.200	--	ND	1.37	--		1
1,1,2-Trichloroethane	ND	0.200	--	ND	1.09	--		1
1,1-Dichloroethane	ND	0.200	--	ND	0.809	--		1
1,1-Dichloroethene	ND	0.200	--	ND	0.792	--		1
1,2,4-Trichlorobenzene	ND	0.200	--	ND	1.48	--		1
1,2,4-Trimethylbenzene	0.391	0.200	--	1.92	0.982	--		1
1,2-Dibromoethane	ND	0.200	--	ND	1.54	--		1
1,2-Dichlorobenzene	ND	0.200	--	ND	1.20	--		1
1,2-Dichloroethane	ND	0.200	--	ND	0.809	--		1
1,2-Dichloropropane	ND	0.200	--	ND	0.924	--		1
1,3,5-Trimethybenzene	ND	0.200	--	ND	0.982	--		1
1,3-Dichlorobenzene	ND	0.200	--	ND	1.20	--		1
1,4-Dichlorobenzene	ND	0.200	--	ND	1.20	--		1
1,4-Dioxane	ND	0.200	--	ND	0.720	--		1
2-Butanone	7.17	0.200	--	21.1	0.589	--		1
2-Hexanone	0.345	0.200	--	1.41	0.819	--		1
Acetone	66.7	1.00	--	158	2.37	--		1
Benzene	1.99	0.200	--	6.36	0.638	--		1
Bromodichloromethane	ND	0.200	--	ND	1.34	--		1
Bromoform	ND	0.200	--	ND	2.06	--		1
Bromomethane	ND	0.200	--	ND	0.776	--		1
Carbon disulfide	ND	0.200	--	ND	0.622	--		1
Carbon tetrachloride	ND	0.200	--	ND	1.26	--		1
Chlorobenzene	ND	0.200	--	ND	0.920	--		1

Project Name:	CITY OF NEW BEDFORD	***Lab Number:***	L1005748
Project Number:	115058	***Report Date:***	05/11/10

SAMPLE RESULTS

Lab ID:	L1005748-09	Date Collected:	04/20/10 11:05
Client ID:	PVP-4	Date Received:	04/21/10
Sample Location:	NBHS	Field Prep:	Not Specified

	ppbV			ug/m3				
Parameter	**Results**	**RL**	**MDL**	**Results**	**RL**	**MDL**	**Qualifier**	**Dilution Factor**
Volatile Organics in Air (Low Level) - Mansfield Lab								
Chloroethane	ND	0.200	--	ND	0.527	--		1
Chloroform	ND	0.200	--	ND	0.976	--		1
Chloromethane	0.506	0.200	--	1.04	0.413	--		1
cis-1,2-Dichloroethene	ND	0.200	--	ND	0.792	--		1
cis-1,3-Dichloropropene	ND	0.200	--	ND	0.907	--		1
Dibromochloromethane	ND	0.200	--	ND	1.70	--		1
Dichlorodifluoromethane	0.408	0.200	--	2.02	0.988	--		1
Ethylbenzene	0.337	0.200	--	1.46	0.868	--		1
Hexachlorobutadiene	ND	0.200	--	ND	2.13	--		1
Methylene chloride	ND	0.500	--	ND	1.74	--		1
4-Methyl-2-pentanone	0.724	0.200	--	2.96	0.819	--		1
Methyl tert butyl ether	ND	0.200	--	ND	0.720	--		1
p/m-Xylene	1.08	0.400	--	4.67	1.74	--		1
o-Xylene	0.396	0.200	--	1.72	0.868	--		1
Styrene	ND	0.200	--	ND	0.851	--		1
Tetrachloroethene	ND	0.200	--	ND	1.36	--		1
Tetrahydrofuran	ND	0.200	--	ND	0.589	--		1
Toluene	1.32	0.200	--	4.95	0.753	--		1
trans-1,2-Dichloroethene	ND	0.200	--	ND	0.792	--		1
trans-1,3-Dichloropropene	ND	0.200	--	ND	0.907	--		1
Trichloroethene	1.42	0.200	--	7.61	1.07	--		1
Trichlorofluoromethane	0.219	0.200	--	1.23	1.12	--		1
Vinyl chloride	ND	0.200	--	ND	0.511	--		1
Naphthalene	ND	0.200	--	ND	1.05	--		1
1,1,1,2-Tetrachloroethane	ND	0.200	--	ND	1.37	--		1
Isopropylbenzene	ND	0.200	--	ND	0.982	--		1
1,2,3-Trichloropropane	ND	0.200	--	ND	1.20	--		1
Bromobenzene	ND	0.200	--	ND	1.28	--		1

Project Name:	CITY OF NEW BEDFORD	***Lab Number:***	L1005748
Project Number:	115058	***Report Date:***	05/11/10

SAMPLE RESULTS

Lab ID:	L1005748-09	Date Collected:	04/20/10 11:05
Client ID:	PVP-4	Date Received:	04/21/10
Sample Location:	NBHS	Field Prep:	Not Specified

	ppbV			ug/m3				
Parameter	**Results**	**RL**	**MDL**	**Results**	**RL**	**MDL**	**Qualifier**	**Dilution Factor**
Volatile Organics in Air (Low Level) - Mansfield Lab								
Dibromomethane	ND	0.200	--	ND	1.42	--		1
tert-Amyl Methyl Ether	ND	0.200	--	ND	0.835	--		1
2-Chlorotoluene	ND	0.200	--	ND	1.03	--		1
4-Chlorotoluene	ND	0.200	--	ND	1.03	--		1
2,2-Dichloropropane	ND	0.200	--	ND	0.923	--		1
1,1-Dichloropropene	ND	0.200	--	ND	0.907	--		1
Diisopropyl ether	ND	0.200	--	ND	0.835	--		1
tert-Butyl Ethyl Ether	ND	0.200	--	ND	0.835	--		1
1,2,3-Trichlorobenzene	ND	0.200	--	ND	1.48	--		1
Ethyl ether	ND	0.200	--	ND	0.606	--		1
n-Butylbenzene	ND	0.200	--	ND	1.10	--		1
sec-Butylbenzene	ND	0.200	--	ND	1.10	--		1
tert-Butylbenzene	ND	0.200	--	ND	1.10	--		1
1,2-Dibromo-3-chloropropane	ND	0.200	--	ND	1.93	--		1
p-Isopropyltoluene	ND	0.200	--	ND	1.10	--		1
n-Propylbenzene	ND	0.200	--	ND	0.982	--		1
1,3-Dichloropropane	ND	0.200	--	ND	0.923	--		1

Project Name:	CITY OF NEW BEDFORD	***Lab Number:***	L1005748
Project Number:	115058	***Report Date:***	05/11/10

SAMPLE RESULTS

Lab ID:	L1005748-10	Date Collected:	04/20/10 09:30
Client ID:	TRC-IA-11	Date Received:	04/21/10
Sample Location:	NBHS	Field Prep:	Not Specified
Matrix:	Air		
Anaytical Method:	48,TO-15		
Analytical Date:	04/27/10 19:11		
Analyst:	AJ		

	ppbV			ug/m3				
Parameter	**Results**	**RL**	**MDL**	**Results**	**RL**	**MDL**	**Qualifier**	**Dilution Factor**
Volatile Organics in Air (Low Level) - Mansfield Lab								
Dichlorodifluoromethane	0.446	0.200	--	2.20	0.988	--		1
Chloromethane	0.520	0.200	--	1.07	0.413	--		1
Vinyl chloride	ND	0.200	--	ND	0.511	--		1
Bromomethane	ND	0.200	--	ND	0.776	--		1
Chloroethane	ND	0.200	--	ND	0.527	--		1
Acetone	3.26	1.00	--	7.75	2.37	--		1
Trichlorofluoromethane	0.211	0.200	--	1.18	1.12	--		1
Ethyl ether	ND	0.200	--	ND	0.606	--		1
1,1-Dichloroethene	ND	0.200	--	ND	0.792	--		1
Methylene chloride	ND	0.500	--	ND	1.74	--		1
Carbon disulfide	ND	0.200	--	ND	0.622	--		1
trans-1,2-Dichloroethene	ND	0.200	--	ND	0.792	--		1
1,1-Dichloroethane	ND	0.200	--	ND	0.809	--		1
Methyl tert butyl ether	ND	0.200	--	ND	0.720	--		1
2-Butanone	0.253	0.200	--	0.746	0.589	--		1
cis-1,2-Dichloroethene	ND	0.200	--	ND	0.792	--		1
Chloroform	ND	0.200	--	ND	0.976	--		1
Tetrahydrofuran	ND	0.200	--	ND	0.589	--		1
2,2-Dichloropropane	ND	0.200	--	ND	0.923	--		1
1,2-Dichloroethane	ND	0.200	--	ND	0.809	--		1
Diisopropyl ether	ND	0.200	--	ND	0.835	--		1
tert-Butyl Ethyl Ether	ND	0.200	--	ND	0.835	--		1
1,1,1-Trichloroethane	ND	0.200	--	ND	1.09	--		1
1,1-Dichloropropene	ND	0.200	--	ND	0.907	--		1
Benzene	ND	0.200	--	ND	0.638	--		1

Project Name: CITY OF NEW BEDFORD **Lab Number:** L1005748

Project Number: 115058 **Report Date:** 05/11/10

SAMPLE RESULTS

Lab ID: L1005748-10 Date Collected: 04/20/10 09:30

Client ID: TRC-IA-11 Date Received: 04/21/10

Sample Location: NBHS Field Prep: Not Specified

Parameter	ppbV Results	ppbV RL	ppbV MDL	ug/m3 Results	ug/m3 RL	ug/m3 MDL	Qualifier	Dilution Factor
Volatile Organics in Air (Low Level) - Mansfield Lab								
Carbon tetrachloride	ND	0.200	--	ND	1.26	--		1
tert-Amyl Methyl Ether	ND	0.200	--	ND	0.835	--		1
Dibromomethane	ND	0.200	--	ND	1.42	--		1
1,2-Dichloropropane	ND	0.200	--	ND	0.924	--		1
Bromodichloromethane	ND	0.200	--	ND	1.34	--		1
1,4-Dioxane	ND	0.200	--	ND	0.720	--		1
Trichloroethene	ND	0.200	--	ND	1.07	--		1
cis-1,3-Dichloropropene	ND	0.200	--	ND	0.907	--		1
4-Methyl-2-pentanone	ND	0.200	--	ND	0.819	--		1
trans-1,3-Dichloropropene	ND	0.200	--	ND	0.907	--		1
1,1,2-Trichloroethane	ND	0.200	--	ND	1.09	--		1
Toluene	0.348	0.200	--	1.31	0.753	--		1
1,3-Dichloropropane	ND	0.200	--	ND	0.923	--		1
2-Hexanone	ND	0.200	--	ND	0.819	--		1
Dibromochloromethane	ND	0.200	--	ND	1.70	--		1
1,2-Dibromoethane	ND	0.200	--	ND	1.54	--		1
Tetrachloroethene	ND	0.200	--	ND	1.36	--		1
1,1,1,2-Tetrachloroethane	ND	0.200	--	ND	1.37	--		1
Chlorobenzene	ND	0.200	--	ND	0.920	--		1
Ethylbenzene	ND	0.200	--	ND	0.868	--		1
p/m-Xylene	ND	0.400	--	ND	1.74	--		1
Bromoform	ND	0.200	--	ND	2.06	--		1
Styrene	ND	0.200	--	ND	0.851	--		1
1,1,2,2-Tetrachloroethane	ND	0.200	--	ND	1.37	--		1
o-Xylene	ND	0.200	--	ND	0.868	--		1
1,2,3-Trichloropropane	ND	0.200	--	ND	1.20	--		1
Isopropylbenzene	ND	0.200	--	ND	0.982	--		1
Bromobenzene	ND	0.200	--	ND	1.28	--		1

Project Name:	CITY OF NEW BEDFORD	***Lab Number:***	L1005748
Project Number:	115058	***Report Date:***	05/11/10

SAMPLE RESULTS

Lab ID:	L1005748-10	Date Collected:	04/20/10 09:30
Client ID:	TRC-IA-11	Date Received:	04/21/10
Sample Location:	NBHS	Field Prep:	Not Specified

	ppbV			ug/m3				
Parameter	**Results**	**RL**	**MDL**	**Results**	**RL**	**MDL**	**Qualifier**	**Dilution Factor**
Volatile Organics in Air (Low Level) - Mansfield Lab								
2-Chlorotoluene	ND	0.200	--	ND	1.03	--		1
n-Propylbenzene	ND	0.200	--	ND	0.982	--		1
4-Chlorotoluene	ND	0.200	--	ND	1.03	--		1
1,3,5-Trimethybenzene	ND	0.200	--	ND	0.982	--		1
tert-Butylbenzene	ND	0.200	--	ND	1.10	--		1
1,2,4-Trimethylbenzene	ND	0.200	--	ND	0.982	--		1
1,3-Dichlorobenzene	ND	0.200	--	ND	1.20	--		1
1,4-Dichlorobenzene	ND	0.200	--	ND	1.20	--		1
sec-Butylbenzene	ND	0.200	--	ND	1.10	--		1
p-Isopropyltoluene	ND	0.200	--	ND	1.10	--		1
1,2-Dichlorobenzene	ND	0.200	--	ND	1.20	--		1
n-Butylbenzene	ND	0.200	--	ND	1.10	--		1
1,2-Dibromo-3-chloropropane	ND	0.200	--	ND	1.93	--		1
1,2,4-Trichlorobenzene	ND	0.200	--	ND	1.48	--		1
Naphthalene	ND	0.200	--	ND	1.05	--		1
1,2,3-Trichlorobenzene	ND	0.200	--	ND	1.48	--		1
Hexachlorobutadiene	ND	0.200	--	ND	2.13	--		1

Project Name:	CITY OF NEW BEDFORD	***Lab Number:***	L1005748
Project Number:	115058	***Report Date:***	05/11/10

SAMPLE RESULTS

Lab ID:	L1005748-10	Date Collected:	04/20/10 09:30
Client ID:	TRC-IA-11	Date Received:	04/21/10
Sample Location:	NBHS	Field Prep:	Not Specified
Matrix:	Air		
Anaytical Method:	48,TO-15-SIM		
Analytical Date:	04/27/10 19:11		
Analyst:	AJ		

	ppbV			ug/m3				
Parameter	**Results**	**RL**	**MDL**	**Results**	**RL**	**MDL**	**Qualifier**	**Dilution Factor**
Volatile Organics in Air by SIM - Mansfield Lab								
Vinyl chloride	ND	0.020	--	ND	0.051	--		1
trans-1,2-Dichloroethene	ND	0.020	--	ND	0.079	--		1
cis-1,2-Dichloroethene	ND	0.020	--	ND	0.079	--		1
Chloroform	ND	0.020	--	ND	0.098	--		1
1,2-Dichloroethane	ND	0.020	--	ND	0.081	--		1
Benzene	ND	0.100	--	ND	0.319	--		1
Carbon tetrachloride	0.081	0.020	--	0.509	0.126	--		1
1,2-Dichloropropane	ND	0.020	--	ND	0.092	--		1
Bromodichloromethane	ND	0.020	--	ND	0.134	--		1
Trichloroethene	ND	0.020	--	ND	0.107	--		1
1,4-Dioxane	ND	0.100	--	ND	0.360	--		1
cis-1,3-Dichloropropene	ND	0.020	--	ND	0.091	--		1
trans-1,3-Dichloropropene	ND	0.020	--	ND	0.091	--		1
1,1,2-Trichloroethane	ND	0.020	--	ND	0.109	--		1
Dibromochloromethane	ND	0.020	--	ND	0.096	--		1
1,2-Dibromoethane	ND	0.020	--	ND	0.154	--		1
Tetrachloroethene	ND	0.020	--	ND	0.136	--		1
1,1,2,2-Tetrachloroethane	ND	0.020	--	ND	0.137	--		1
1,4-Dichlorobenzene	ND	0.020	--	ND	0.120	--		1
Naphthalene	ND	0.050	--	ND	0.262	--		1
Hexachlorobutadiene	ND	0.050	--	ND	0.192	--		1

Project Name:	CITY OF NEW BEDFORD	***Lab Number:***	L1005748
Project Number:	115058	***Report Date:***	05/11/10

SAMPLE RESULTS

Lab ID:	L1005748-11	Date Collected:	04/20/10 11:10
Client ID:	TRC-IA-13	Date Received:	04/21/10
Sample Location:	NBHS	Field Prep:	Not Specified
Matrix:	Air		
Anaytical Method:	48,TO-15		
Analytical Date:	04/24/10 22:16		
Analyst:	AJ		

	ppbV			ug/m3				
Parameter	**Results**	**RL**	**MDL**	**Results**	**RL**	**MDL**	**Qualifier**	**Dilution Factor**
Volatile Organics in Air (Low Level) - Mansfield Lab								
Dichlorodifluoromethane	0.518	0.200	--	2.56	0.988	--		1
Chloromethane	0.687	0.200	--	1.42	0.413	--		1
Vinyl chloride	ND	0.200	--	ND	0.511	--		1
Bromomethane	ND	0.200	--	ND	0.776	--		1
Chloroethane	ND	0.200	--	ND	0.527	--		1
Acetone	2.12	1.00	--	5.02	2.37	--		1
Trichlorofluoromethane	0.242	0.200	--	1.36	1.12	--		1
Ethyl ether	ND	0.200	--	ND	0.606	--		1
1,1-Dichloroethene	ND	0.200	--	ND	0.792	--		1
Methylene chloride	ND	0.500	--	ND	1.74	--		1
Carbon disulfide	ND	0.200	--	ND	0.622	--		1
trans-1,2-Dichloroethene	ND	0.200	--	ND	0.792	--		1
1,1-Dichloroethane	ND	0.200	--	ND	0.809	--		1
Methyl tert butyl ether	ND	0.200	--	ND	0.720	--		1
2-Butanone	ND	0.200	--	ND	0.589	--		1
cis-1,2-Dichloroethene	ND	0.200	--	ND	0.792	--		1
Chloroform	ND	0.200	--	ND	0.976	--		1
Tetrahydrofuran	ND	0.200	--	ND	0.589	--		1
2,2-Dichloropropane	ND	0.200	--	ND	0.923	--		1
1,2-Dichloroethane	ND	0.200	--	ND	0.809	--		1
Diisopropyl ether	ND	0.200	--	ND	0.835	--		1
tert-Butyl Ethyl Ether	ND	0.200	--	ND	0.835	--		1
1,1,1-Trichloroethane	ND	0.200	--	ND	1.09	--		1
1,1-Dichloropropene	ND	0.200	--	ND	0.907	--		1
Benzene	ND	0.200	--	ND	0.638	--		1

Project Name: CITY OF NEW BEDFORD **Lab Number:** L1005748

Project Number: 115058 **Report Date:** 05/11/10

SAMPLE RESULTS

Lab ID: L1005748-11 Date Collected: 04/20/10 11:10

Client ID: TRC-IA-13 Date Received: 04/21/10

Sample Location: NBHS Field Prep: Not Specified

Parameter	ppbV Results	ppbV RL	ppbV MDL	ug/m3 Results	ug/m3 RL	ug/m3 MDL	Qualifier	Dilution Factor
Volatile Organics in Air (Low Level) - Mansfield Lab								
Carbon tetrachloride	ND	0.200	--	ND	1.26	--		1
tert-Amyl Methyl Ether	ND	0.200	--	ND	0.835	--		1
Dibromomethane	ND	0.200	--	ND	1.42	--		1
1,2-Dichloropropane	ND	0.200	--	ND	0.924	--		1
Bromodichloromethane	ND	0.200	--	ND	1.34	--		1
1,4-Dioxane	ND	0.200	--	ND	0.720	--		1
Trichloroethene	ND	0.200	--	ND	1.07	--		1
cis-1,3-Dichloropropene	ND	0.200	--	ND	0.907	--		1
4-Methyl-2-pentanone	ND	0.200	--	ND	0.819	--		1
trans-1,3-Dichloropropene	ND	0.200	--	ND	0.907	--		1
1,1,2-Trichloroethane	ND	0.200	--	ND	1.09	--		1
Toluene	ND	0.200	--	ND	0.753	--		1
1,3-Dichloropropane	ND	0.200	--	ND	0.923	--		1
2-Hexanone	ND	0.200	--	ND	0.819	--		1
Dibromochloromethane	ND	0.200	--	ND	1.70	--		1
1,2-Dibromoethane	ND	0.200	--	ND	1.54	--		1
Tetrachloroethene	ND	0.200	--	ND	1.36	--		1
1,1,1,2-Tetrachloroethane	ND	0.200	--	ND	1.37	--		1
Chlorobenzene	ND	0.200	--	ND	0.920	--		1
Ethylbenzene	ND	0.200	--	ND	0.868	--		1
p/m-Xylene	ND	0.400	--	ND	1.74	--		1
Bromoform	ND	0.200	--	ND	2.06	--		1
Styrene	ND	0.200	--	ND	0.851	--		1
1,1,2,2-Tetrachloroethane	ND	0.200	--	ND	1.37	--		1
o-Xylene	ND	0.200	--	ND	0.868	--		1
1,2,3-Trichloropropane	ND	0.200	--	ND	1.20	--		1
Isopropylbenzene	ND	0.200	--	ND	0.982	--		1
Bromobenzene	ND	0.200	--	ND	1.28	--		1

Project Name:	CITY OF NEW BEDFORD	***Lab Number:***	L1005748
Project Number:	115058	***Report Date:***	05/11/10

SAMPLE RESULTS

Lab ID:	L1005748-11	Date Collected:	04/20/10 11:10
Client ID:	TRC-IA-13	Date Received:	04/21/10
Sample Location:	NBHS	Field Prep:	Not Specified

	ppbV			ug/m3				
Parameter	**Results**	**RL**	**MDL**	**Results**	**RL**	**MDL**	**Qualifier**	**Dilution Factor**
Volatile Organics in Air (Low Level) - Mansfield Lab								
2-Chlorotoluene	ND	0.200	--	ND	1.03	--		1
n-Propylbenzene	ND	0.200	--	ND	0.982	--		1
4-Chlorotoluene	ND	0.200	--	ND	1.03	--		1
1,3,5-Trimethybenzene	ND	0.200	--	ND	0.982	--		1
tert-Butylbenzene	ND	0.200	--	ND	1.10	--		1
1,2,4-Trimethylbenzene	ND	0.200	--	ND	0.982	--		1
1,3-Dichlorobenzene	ND	0.200	--	ND	1.20	--		1
1,4-Dichlorobenzene	ND	0.200	--	ND	1.20	--		1
sec-Butylbenzene	ND	0.200	--	ND	1.10	--		1
p-Isopropyltoluene	ND	0.200	--	ND	1.10	--		1
1,2-Dichlorobenzene	ND	0.200	--	ND	1.20	--		1
n-Butylbenzene	ND	0.200	--	ND	1.10	--		1
1,2-Dibromo-3-chloropropane	ND	0.200	--	ND	1.93	--		1
1,2,4-Trichlorobenzene	ND	0.200	--	ND	1.48	--		1
Naphthalene	ND	0.200	--	ND	1.05	--		1
1,2,3-Trichlorobenzene	ND	0.200	--	ND	1.48	--		1
Hexachlorobutadiene	ND	0.200	--	ND	2.13	--		1

Project Name:	CITY OF NEW BEDFORD	***Lab Number:***	L1005748
Project Number:	115058	***Report Date:***	05/11/10

SAMPLE RESULTS

Lab ID:	L1005748-11	Date Collected:	04/20/10 11:10
Client ID:	TRC-IA-13	Date Received:	04/21/10
Sample Location:	NBHS	Field Prep:	Not Specified
Matrix:	Air		
Anaytical Method:	48,TO-15-SIM		
Analytical Date:	04/24/10 22:16		
Analyst:	AJ		

	ppbV			ug/m3				
Parameter	**Results**	**RL**	**MDL**	**Results**	**RL**	**MDL**	**Qualifier**	**Dilution Factor**
Volatile Organics in Air by SIM - Mansfield Lab								
Vinyl chloride	ND	0.020	--	ND	0.051	--		1
trans-1,2-Dichloroethene	ND	0.020	--	ND	0.079	--		1
cis-1,2-Dichloroethene	ND	0.020	--	ND	0.079	--		1
Chloroform	ND	0.020	--	ND	0.098	--		1
1,2-Dichloroethane	ND	0.020	--	ND	0.081	--		1
Benzene	0.101	0.100	--	0.322	0.319	--		1
Carbon tetrachloride	0.092	0.020	--	0.578	0.126	--		1
1,2-Dichloropropane	ND	0.020	--	ND	0.092	--		1
Bromodichloromethane	ND	0.020	--	ND	0.134	--		1
Trichloroethene	ND	0.020	--	ND	0.107	--		1
1,4-Dioxane	ND	0.100	--	ND	0.360	--		1
cis-1,3-Dichloropropene	ND	0.020	--	ND	0.091	--		1
trans-1,3-Dichloropropene	ND	0.020	--	ND	0.091	--		1
1,1,2-Trichloroethane	ND	0.020	--	ND	0.109	--		1
Dibromochloromethane	ND	0.020	--	ND	0.096	--		1
1,2-Dibromoethane	ND	0.020	--	ND	0.154	--		1
Tetrachloroethene	ND	0.020	--	ND	0.136	--		1
1,1,2,2-Tetrachloroethane	ND	0.020	--	ND	0.137	--		1
1,4-Dichlorobenzene	ND	0.020	--	ND	0.120	--		1
Naphthalene	ND	0.050	--	ND	0.262	--		1
Hexachlorobutadiene	ND	0.050	--	ND	0.192	--		1

Project Name:	CITY OF NEW BEDFORD	***Lab Number:***	L1005748
Project Number:	115058	***Report Date:***	05/11/10

SAMPLE RESULTS

Lab ID:	L1005748-12	Date Collected:	04/20/10 11:40
Client ID:	PVP-5	Date Received:	04/21/10
Sample Location:	NBHS	Field Prep:	Not Specified
Matrix:	Soil_Vapor		
Anaytical Method:	48,TO-15		
Analytical Date:	04/24/10 18:13		
Analyst:	AJ		

	ppbV			ug/m3				
Parameter	**Results**	**RL**	**MDL**	**Results**	**RL**	**MDL**	**Qualifier**	**Dilution Factor**
Volatile Organics in Air (Low Level) - Mansfield Lab								
1,1,1-Trichloroethane	ND	0.200	--	ND	1.09	--		1
1,1,2,2-Tetrachloroethane	ND	0.200	--	ND	1.37	--		1
1,1,2-Trichloroethane	ND	0.200	--	ND	1.09	--		1
1,1-Dichloroethane	ND	0.200	--	ND	0.809	--		1
1,1-Dichloroethene	ND	0.200	--	ND	0.792	--		1
1,2,4-Trichlorobenzene	ND	0.200	--	ND	1.48	--		1
1,2,4-Trimethylbenzene	ND	0.200	--	ND	0.982	--		1
1,2-Dibromoethane	ND	0.200	--	ND	1.54	--		1
1,2-Dichlorobenzene	ND	0.200	--	ND	1.20	--		1
1,2-Dichloroethane	ND	0.200	--	ND	0.809	--		1
1,2-Dichloropropane	ND	0.200	--	ND	0.924	--		1
1,3,5-Trimethybenzene	ND	0.200	--	ND	0.982	--		1
1,3-Dichlorobenzene	ND	0.200	--	ND	1.20	--		1
1,4-Dichlorobenzene	ND	0.200	--	ND	1.20	--		1
1,4-Dioxane	ND	0.200	--	ND	0.720	--		1
2-Butanone	2.29	0.200	--	6.75	0.589	--		1
2-Hexanone	ND	0.200	--	ND	0.819	--		1
Acetone	30.0	1.00	--	71.3	2.37	--		1
Benzene	1.16	0.200	--	3.71	0.638	--		1
Bromodichloromethane	ND	0.200	--	ND	1.34	--		1
Bromoform	ND	0.200	--	ND	2.06	--		1
Bromomethane	ND	0.200	--	ND	0.776	--		1
Carbon disulfide	ND	0.200	--	ND	0.622	--		1
Carbon tetrachloride	ND	0.200	--	ND	1.26	--		1
Chlorobenzene	ND	0.200	--	ND	0.920	--		1

Project Name:	CITY OF NEW BEDFORD	***Lab Number:***	L1005748
Project Number:	115058	***Report Date:***	05/11/10

SAMPLE RESULTS

Lab ID:	L1005748-12	Date Collected:	04/20/10 11:40
Client ID:	PVP-5	Date Received:	04/21/10
Sample Location:	NBHS	Field Prep:	Not Specified

	ppbV			ug/m3				
Parameter	**Results**	**RL**	**MDL**	**Results**	**RL**	**MDL**	**Qualifier**	**Dilution Factor**
Volatile Organics in Air (Low Level) - Mansfield Lab								
Chloroethane	ND	0.200	--	ND	0.527	--		1
Chloroform	ND	0.200	--	ND	0.976	--		1
Chloromethane	0.609	0.200	--	1.26	0.413	--		1
cis-1,2-Dichloroethene	ND	0.200	--	ND	0.792	--		1
cis-1,3-Dichloropropene	ND	0.200	--	ND	0.907	--		1
Dibromochloromethane	ND	0.200	--	ND	1.70	--		1
Dichlorodifluoromethane	0.676	0.200	--	3.34	0.988	--		1
Ethylbenzene	ND	0.200	--	ND	0.868	--		1
Hexachlorobutadiene	ND	0.200	--	ND	2.13	--		1
Methylene chloride	ND	0.500	--	ND	1.74	--		1
4-Methyl-2-pentanone	ND	0.200	--	ND	0.819	--		1
Methyl tert butyl ether	ND	0.200	--	ND	0.720	--		1
p/m-Xylene	0.607	0.400	--	2.63	1.74	--		1
o-Xylene	0.227	0.200	--	0.985	0.868	--		1
Styrene	ND	0.200	--	ND	0.851	--		1
Tetrachloroethene	1.28	0.200	--	8.70	1.36	--		1
Tetrahydrofuran	0.312	0.200	--	0.919	0.589	--		1
Toluene	0.661	0.200	--	2.49	0.753	--		1
trans-1,2-Dichloroethene	ND	0.200	--	ND	0.792	--		1
trans-1,3-Dichloropropene	ND	0.200	--	ND	0.907	--		1
Trichloroethene	0.252	0.200	--	1.35	1.07	--		1
Trichlorofluoromethane	0.292	0.200	--	1.64	1.12	--		1
Vinyl chloride	ND	0.200	--	ND	0.511	--		1
Naphthalene	ND	0.200	--	ND	1.05	--		1
1,1,1,2-Tetrachloroethane	ND	0.200	--	ND	1.37	--		1
Isopropylbenzene	ND	0.200	--	ND	0.982	--		1
1,2,3-Trichloropropane	ND	0.200	--	ND	1.20	--		1
Bromobenzene	ND	0.200	--	ND	1.28	--		1

Project Name: CITY OF NEW BEDFORD **Lab Number:** L1005748

Project Number: 115058 **Report Date:** 05/11/10

SAMPLE RESULTS

Lab ID: L1005748-12 Date Collected: 04/20/10 11:40

Client ID: PVP-5 Date Received: 04/21/10

Sample Location: NBHS Field Prep: Not Specified

Parameter	ppbV Results	ppbV RL	ppbV MDL	ug/m3 Results	ug/m3 RL	ug/m3 MDL	Qualifier	Dilution Factor
Volatile Organics in Air (Low Level) - Mansfield Lab								
Dibromomethane	ND	0.200	--	ND	1.42	--		1
tert-Amyl Methyl Ether	ND	0.200	--	ND	0.835	--		1
2-Chlorotoluene	ND	0.200	--	ND	1.03	--		1
4-Chlorotoluene	ND	0.200	--	ND	1.03	--		1
2,2-Dichloropropane	ND	0.200	--	ND	0.923	--		1
1,1-Dichloropropene	ND	0.200	--	ND	0.907	--		1
Diisopropyl ether	ND	0.200	--	ND	0.835	--		1
tert-Butyl Ethyl Ether	ND	0.200	--	ND	0.835	--		1
1,2,3-Trichlorobenzene	ND	0.200	--	ND	1.48	--		1
Ethyl ether	ND	0.200	--	ND	0.606	--		1
n-Butylbenzene	ND	0.200	--	ND	1.10	--		1
sec-Butylbenzene	ND	0.200	--	ND	1.10	--		1
tert-Butylbenzene	ND	0.200	--	ND	1.10	--		1
1,2-Dibromo-3-chloropropane	ND	0.200	--	ND	1.93	--		1
p-Isopropyltoluene	ND	0.200	--	ND	1.10	--		1
n-Propylbenzene	ND	0.200	--	ND	0.982	--		1
1,3-Dichloropropane	ND	0.200	--	ND	0.923	--		1

Project Name:	CITY OF NEW BEDFORD	***Lab Number:***	L1005748
Project Number:	115058	***Report Date:***	05/11/10

SAMPLE RESULTS

Lab ID:	L1005748-13	Date Collected:	04/20/10 11:00
Client ID:	TRC-IA-12	Date Received:	04/21/10
Sample Location:	NBHS	Field Prep:	Not Specified
Matrix:	Air		
Anaytical Method:	48,TO-15		
Analytical Date:	04/24/10 22:55		
Analyst:	AJ		

	ppbV			ug/m3				
Parameter	**Results**	**RL**	**MDL**	**Results**	**RL**	**MDL**	**Qualifier**	**Dilution Factor**
Volatile Organics in Air (Low Level) - Mansfield Lab								
Dichlorodifluoromethane	0.576	0.200	--	2.85	0.988	--		1
Chloromethane	0.644	0.200	--	1.33	0.413	--		1
Vinyl chloride	ND	0.200	--	ND	0.511	--		1
Bromomethane	ND	0.200	--	ND	0.776	--		1
Chloroethane	ND	0.200	--	ND	0.527	--		1
Acetone	2.24	1.00	--	5.30	2.37	--		1
Trichlorofluoromethane	0.264	0.200	--	1.48	1.12	--		1
Ethyl ether	ND	0.200	--	ND	0.606	--		1
1,1-Dichloroethene	ND	0.200	--	ND	0.792	--		1
Methylene chloride	ND	0.500	--	ND	1.74	--		1
Carbon disulfide	ND	0.200	--	ND	0.622	--		1
trans-1,2-Dichloroethene	ND	0.200	--	ND	0.792	--		1
1,1-Dichloroethane	ND	0.200	--	ND	0.809	--		1
Methyl tert butyl ether	ND	0.200	--	ND	0.720	--		1
2-Butanone	0.220	0.200	--	0.648	0.589	--		1
cis-1,2-Dichloroethene	ND	0.200	--	ND	0.792	--		1
Chloroform	ND	0.200	--	ND	0.976	--		1
Tetrahydrofuran	ND	0.200	--	ND	0.589	--		1
2,2-Dichloropropane	ND	0.200	--	ND	0.923	--		1
1,2-Dichloroethane	ND	0.200	--	ND	0.809	--		1
Diisopropyl ether	ND	0.200	--	ND	0.835	--		1
tert-Butyl Ethyl Ether	ND	0.200	--	ND	0.835	--		1
1,1,1-Trichloroethane	ND	0.200	--	ND	1.09	--		1
1,1-Dichloropropene	ND	0.200	--	ND	0.907	--		1
Benzene	ND	0.200	--	ND	0.638	--		1

Project Name:	CITY OF NEW BEDFORD	***Lab Number:***	L1005748
Project Number:	115058	***Report Date:***	05/11/10

SAMPLE RESULTS

Lab ID:	L1005748-13	Date Collected:	04/20/10 11:00
Client ID:	TRC-IA-12	Date Received:	04/21/10
Sample Location:	NBHS	Field Prep:	Not Specified

	ppbV			ug/m3				
Parameter	**Results**	**RL**	**MDL**	**Results**	**RL**	**MDL**	**Qualifier**	**Dilution Factor**
Volatile Organics in Air (Low Level) - Mansfield Lab								
Carbon tetrachloride	ND	0.200	--	ND	1.26	--		1
tert-Amyl Methyl Ether	ND	0.200	--	ND	0.835	--		1
Dibromomethane	ND	0.200	--	ND	1.42	--		1
1,2-Dichloropropane	ND	0.200	--	ND	0.924	--		1
Bromodichloromethane	ND	0.200	--	ND	1.34	--		1
1,4-Dioxane	ND	0.200	--	ND	0.720	--		1
Trichloroethene	ND	0.200	--	ND	1.07	--		1
cis-1,3-Dichloropropene	ND	0.200	--	ND	0.907	--		1
4-Methyl-2-pentanone	ND	0.200	--	ND	0.819	--		1
trans-1,3-Dichloropropene	ND	0.200	--	ND	0.907	--		1
1,1,2-Trichloroethane	ND	0.200	--	ND	1.09	--		1
Toluene	ND	0.200	--	ND	0.753	--		1
1,3-Dichloropropane	ND	0.200	--	ND	0.923	--		1
2-Hexanone	ND	0.200	--	ND	0.819	--		1
Dibromochloromethane	ND	0.200	--	ND	1.70	--		1
1,2-Dibromoethane	ND	0.200	--	ND	1.54	--		1
Tetrachloroethene	ND	0.200	--	ND	1.36	--		1
1,1,1,2-Tetrachloroethane	ND	0.200	--	ND	1.37	--		1
Chlorobenzene	ND	0.200	--	ND	0.920	--		1
Ethylbenzene	ND	0.200	--	ND	0.868	--		1
p/m-Xylene	ND	0.400	--	ND	1.74	--		1
Bromoform	ND	0.200	--	ND	2.06	--		1
Styrene	ND	0.200	--	ND	0.851	--		1
1,1,2,2-Tetrachloroethane	ND	0.200	--	ND	1.37	--		1
o-Xylene	ND	0.200	--	ND	0.868	--		1
1,2,3-Trichloropropane	ND	0.200	--	ND	1.20	--		1
Isopropylbenzene	ND	0.200	--	ND	0.982	--		1
Bromobenzene	ND	0.200	--	ND	1.28	--		1

Project Name:	CITY OF NEW BEDFORD	***Lab Number:***	L1005748
Project Number:	115058	***Report Date:***	05/11/10

SAMPLE RESULTS

Lab ID:	L1005748-13	Date Collected:	04/20/10 11:00
Client ID:	TRC-IA-12	Date Received:	04/21/10
Sample Location:	NBHS	Field Prep:	Not Specified

	ppbV			ug/m3				
Parameter	**Results**	**RL**	**MDL**	**Results**	**RL**	**MDL**	**Qualifier**	**Dilution Factor**
Volatile Organics in Air (Low Level) - Mansfield Lab								
2-Chlorotoluene	ND	0.200	--	ND	1.03	--		1
n-Propylbenzene	ND	0.200	--	ND	0.982	--		1
4-Chlorotoluene	ND	0.200	--	ND	1.03	--		1
1,3,5-Trimethybenzene	ND	0.200	--	ND	0.982	--		1
tert-Butylbenzene	ND	0.200	--	ND	1.10	--		1
1,2,4-Trimethylbenzene	ND	0.200	--	ND	0.982	--		1
1,3-Dichlorobenzene	ND	0.200	--	ND	1.20	--		1
1,4-Dichlorobenzene	ND	0.200	--	ND	1.20	--		1
sec-Butylbenzene	ND	0.200	--	ND	1.10	--		1
p-Isopropyltoluene	ND	0.200	--	ND	1.10	--		1
1,2-Dichlorobenzene	ND	0.200	--	ND	1.20	--		1
n-Butylbenzene	ND	0.200	--	ND	1.10	--		1
1,2-Dibromo-3-chloropropane	ND	0.200	--	ND	1.93	--		1
1,2,4-Trichlorobenzene	ND	0.200	--	ND	1.48	--		1
Naphthalene	ND	0.200	--	ND	1.05	--		1
1,2,3-Trichlorobenzene	ND	0.200	--	ND	1.48	--		1
Hexachlorobutadiene	ND	0.200	--	ND	2.13	--		1

Project Name:	CITY OF NEW BEDFORD	***Lab Number:***	L1005748
Project Number:	115058	***Report Date:***	05/11/10

SAMPLE RESULTS

Lab ID:	L1005748-13	Date Collected:	04/20/10 11:00
Client ID:	TRC-IA-12	Date Received:	04/21/10
Sample Location:	NBHS	Field Prep:	Not Specified
Matrix:	Air		
Anaytical Method:	48,TO-15-SIM		
Analytical Date:	04/24/10 22:55		
Analyst:	AJ		

	ppbV			ug/m3				
Parameter	**Results**	**RL**	**MDL**	**Results**	**RL**	**MDL**	**Qualifier**	**Dilution Factor**
Volatile Organics in Air by SIM - Mansfield Lab								
Vinyl chloride	ND	0.020	--	ND	0.051	--		1
trans-1,2-Dichloroethene	ND	0.020	--	ND	0.079	--		1
cis-1,2-Dichloroethene	ND	0.020	--	ND	0.079	--		1
Chloroform	ND	0.020	--	ND	0.098	--		1
1,2-Dichloroethane	ND	0.020	--	ND	0.081	--		1
Benzene	0.112	0.100	--	0.358	0.319	--		1
Carbon tetrachloride	0.097	0.020	--	0.610	0.126	--		1
1,2-Dichloropropane	ND	0.020	--	ND	0.092	--		1
Bromodichloromethane	ND	0.020	--	ND	0.134	--		1
Trichloroethene	ND	0.020	--	ND	0.107	--		1
1,4-Dioxane	ND	0.100	--	ND	0.360	--		1
cis-1,3-Dichloropropene	ND	0.020	--	ND	0.091	--		1
trans-1,3-Dichloropropene	ND	0.020	--	ND	0.091	--		1
1,1,2-Trichloroethane	ND	0.020	--	ND	0.109	--		1
Dibromochloromethane	ND	0.020	--	ND	0.096	--		1
1,2-Dibromoethane	ND	0.020	--	ND	0.154	--		1
Tetrachloroethene	ND	0.020	--	ND	0.136	--		1
1,1,2,2-Tetrachloroethane	ND	0.020	--	ND	0.137	--		1
1,4-Dichlorobenzene	ND	0.020	--	ND	0.120	--		1
Naphthalene	ND	0.050	--	ND	0.262	--		1
Hexachlorobutadiene	ND	0.050	--	ND	0.192	--		1

Project Name:	CITY OF NEW BEDFORD	***Lab Number:***	L1005748
Project Number:	115058	***Report Date:***	05/11/10

SAMPLE RESULTS

Lab ID:	L1005748-14	Date Collected:	04/20/10 10:55
Client ID:	TRC-IA-14	Date Received:	04/21/10
Sample Location:	NBHS	Field Prep:	Not Specified
Matrix:	Air		
Anaytical Method:	48,TO-15		
Analytical Date:	04/24/10 23:31		
Analyst:	AJ		

	ppbV			ug/m3				
Parameter	**Results**	**RL**	**MDL**	**Results**	**RL**	**MDL**	**Qualifier**	**Dilution Factor**
Volatile Organics in Air (Low Level) - Mansfield Lab								
Dichlorodifluoromethane	0.452	0.200	--	2.23	0.988	--		1
Chloromethane	0.491	0.200	--	1.01	0.413	--		1
Vinyl chloride	ND	0.200	--	ND	0.511	--		1
Bromomethane	ND	0.200	--	ND	0.776	--		1
Chloroethane	ND	0.200	--	ND	0.527	--		1
Acetone	1.95	1.00	--	4.62	2.37	--		1
Trichlorofluoromethane	0.215	0.200	--	1.21	1.12	--		1
Ethyl ether	ND	0.200	--	ND	0.606	--		1
1,1-Dichloroethene	ND	0.200	--	ND	0.792	--		1
Methylene chloride	ND	0.500	--	ND	1.74	--		1
Carbon disulfide	ND	0.200	--	ND	0.622	--		1
trans-1,2-Dichloroethene	ND	0.200	--	ND	0.792	--		1
1,1-Dichloroethane	ND	0.200	--	ND	0.809	--		1
Methyl tert butyl ether	ND	0.200	--	ND	0.720	--		1
2-Butanone	ND	0.200	--	ND	0.589	--		1
cis-1,2-Dichloroethene	ND	0.200	--	ND	0.792	--		1
Chloroform	ND	0.200	--	ND	0.976	--		1
Tetrahydrofuran	ND	0.200	--	ND	0.589	--		1
2,2-Dichloropropane	ND	0.200	--	ND	0.923	--		1
1,2-Dichloroethane	ND	0.200	--	ND	0.809	--		1
Diisopropyl ether	ND	0.200	--	ND	0.835	--		1
tert-Butyl Ethyl Ether	ND	0.200	--	ND	0.835	--		1
1,1,1-Trichloroethane	ND	0.200	--	ND	1.09	--		1
1,1-Dichloropropene	ND	0.200	--	ND	0.907	--		1
Benzene	ND	0.200	--	ND	0.638	--		1

Project Name: CITY OF NEW BEDFORD **Lab Number:** L1005748

Project Number: 115058 **Report Date:** 05/11/10

SAMPLE RESULTS

Lab ID: L1005748-14 Date Collected: 04/20/10 10:55

Client ID: TRC-IA-14 Date Received: 04/21/10

Sample Location: NBHS Field Prep: Not Specified

Parameter	ppbV Results	ppbV RL	ppbV MDL	ug/m3 Results	ug/m3 RL	ug/m3 MDL	Qualifier	Dilution Factor
Volatile Organics in Air (Low Level) - Mansfield Lab								
Carbon tetrachloride	ND	0.200	--	ND	1.26	--		1
tert-Amyl Methyl Ether	ND	0.200	--	ND	0.835	--		1
Dibromomethane	ND	0.200	--	ND	1.42	--		1
1,2-Dichloropropane	ND	0.200	--	ND	0.924	--		1
Bromodichloromethane	ND	0.200	--	ND	1.34	--		1
1,4-Dioxane	ND	0.200	--	ND	0.720	--		1
Trichloroethene	ND	0.200	--	ND	1.07	--		1
cis-1,3-Dichloropropene	ND	0.200	--	ND	0.907	--		1
4-Methyl-2-pentanone	ND	0.200	--	ND	0.819	--		1
trans-1,3-Dichloropropene	ND	0.200	--	ND	0.907	--		1
1,1,2-Trichloroethane	ND	0.200	--	ND	1.09	--		1
Toluene	ND	0.200	--	ND	0.753	--		1
1,3-Dichloropropane	ND	0.200	--	ND	0.923	--		1
2-Hexanone	ND	0.200	--	ND	0.819	--		1
Dibromochloromethane	ND	0.200	--	ND	1.70	--		1
1,2-Dibromoethane	ND	0.200	--	ND	1.54	--		1
Tetrachloroethene	ND	0.200	--	ND	1.36	--		1
1,1,1,2-Tetrachloroethane	ND	0.200	--	ND	1.37	--		1
Chlorobenzene	ND	0.200	--	ND	0.920	--		1
Ethylbenzene	ND	0.200	--	ND	0.868	--		1
p/m-Xylene	ND	0.400	--	ND	1.74	--		1
Bromoform	ND	0.200	--	ND	2.06	--		1
Styrene	ND	0.200	--	ND	0.851	--		1
1,1,2,2-Tetrachloroethane	ND	0.200	--	ND	1.37	--		1
o-Xylene	ND	0.200	--	ND	0.868	--		1
1,2,3-Trichloropropane	ND	0.200	--	ND	1.20	--		1
Isopropylbenzene	ND	0.200	--	ND	0.982	--		1
Bromobenzene	ND	0.200	--	ND	1.28	--		1

Project Name: CITY OF NEW BEDFORD **Lab Number:** L1005748

Project Number: 115058 **Report Date:** 05/11/10

SAMPLE RESULTS

Lab ID: L1005748-14 Date Collected: 04/20/10 10:55

Client ID: TRC-IA-14 Date Received: 04/21/10

Sample Location: NBHS Field Prep: Not Specified

Parameter	ppbV Results	ppbV RL	ppbV MDL	ug/m3 Results	ug/m3 RL	ug/m3 MDL	Qualifier	Dilution Factor
Volatile Organics in Air (Low Level) - Mansfield Lab								
2-Chlorotoluene	ND	0.200	--	ND	1.03	--		1
n-Propylbenzene	ND	0.200	--	ND	0.982	--		1
4-Chlorotoluene	ND	0.200	--	ND	1.03	--		1
1,3,5-Trimethybenzene	ND	0.200	--	ND	0.982	--		1
tert-Butylbenzene	ND	0.200	--	ND	1.10	--		1
1,2,4-Trimethylbenzene	ND	0.200	--	ND	0.982	--		1
1,3-Dichlorobenzene	ND	0.200	--	ND	1.20	--		1
1,4-Dichlorobenzene	ND	0.200	--	ND	1.20	--		1
sec-Butylbenzene	ND	0.200	--	ND	1.10	--		1
p-Isopropyltoluene	ND	0.200	--	ND	1.10	--		1
1,2-Dichlorobenzene	ND	0.200	--	ND	1.20	--		1
n-Butylbenzene	ND	0.200	--	ND	1.10	--		1
1,2-Dibromo-3-chloropropane	ND	0.200	--	ND	1.93	--		1
1,2,4-Trichlorobenzene	ND	0.200	--	ND	1.48	--		1
Naphthalene	ND	0.200	--	ND	1.05	--		1
1,2,3-Trichlorobenzene	ND	0.200	--	ND	1.48	--		1
Hexachlorobutadiene	ND	0.200	--	ND	2.13	--		1

Project Name:	CITY OF NEW BEDFORD	***Lab Number:***	L1005748
Project Number:	115058	***Report Date:***	05/11/10

SAMPLE RESULTS

Lab ID:	L1005748-14	Date Collected:	04/20/10 10:55
Client ID:	TRC-IA-14	Date Received:	04/21/10
Sample Location:	NBHS	Field Prep:	Not Specified
Matrix:	Air		
Anaytical Method:	48,TO-15-SIM		
Analytical Date:	04/24/10 23:31		
Analyst:	AJ		

	ppbV			ug/m3				
Parameter	**Results**	**RL**	**MDL**	**Results**	**RL**	**MDL**	**Qualifier**	**Dilution Factor**
Volatile Organics in Air by SIM - Mansfield Lab								
Vinyl chloride	ND	0.020	--	ND	0.051	--		1
trans-1,2-Dichloroethene	ND	0.020	--	ND	0.079	--		1
cis-1,2-Dichloroethene	ND	0.020	--	ND	0.079	--		1
Chloroform	ND	0.020	--	ND	0.098	--		1
1,2-Dichloroethane	ND	0.020	--	ND	0.081	--		1
Benzene	ND	0.100	--	ND	0.319	--		1
Carbon tetrachloride	0.077	0.020	--	0.484	0.126	--		1
1,2-Dichloropropane	ND	0.020	--	ND	0.092	--		1
Bromodichloromethane	ND	0.020	--	ND	0.134	--		1
Trichloroethene	ND	0.020	--	ND	0.107	--		1
1,4-Dioxane	ND	0.100	--	ND	0.360	--		1
cis-1,3-Dichloropropene	ND	0.020	--	ND	0.091	--		1
trans-1,3-Dichloropropene	ND	0.020	--	ND	0.091	--		1
1,1,2-Trichloroethane	ND	0.020	--	ND	0.109	--		1
Dibromochloromethane	ND	0.020	--	ND	0.096	--		1
1,2-Dibromoethane	ND	0.020	--	ND	0.154	--		1
Tetrachloroethene	ND	0.020	--	ND	0.136	--		1
1,1,2,2-Tetrachloroethane	ND	0.020	--	ND	0.137	--		1
1,4-Dichlorobenzene	ND	0.020	--	ND	0.120	--		1
Naphthalene	ND	0.050	--	ND	0.262	--		1
Hexachlorobutadiene	ND	0.050	--	ND	0.192	--		1

Project Name:	CITY OF NEW BEDFORD	***Lab Number:***	L1005748
Project Number:	115058	***Report Date:***	05/11/10

SAMPLE RESULTS

Lab ID:	L1005748-15	Date Collected:	04/20/10 12:10
Client ID:	PVP-7	Date Received:	04/21/10
Sample Location:	NBHS	Field Prep:	Not Specified
Matrix:	Soil_Vapor		
Anaytical Method:	48,TO-15		
Analytical Date:	04/24/10 18:51		
Analyst:	AJ		

	ppbV			ug/m3				
Parameter	**Results**	**RL**	**MDL**	**Results**	**RL**	**MDL**	**Qualifier**	**Dilution Factor**
Volatile Organics in Air (Low Level) - Mansfield Lab								
1,1,1-Trichloroethane	0.395	0.200	--	2.15	1.09	--		1
1,1,2,2-Tetrachloroethane	ND	0.200	--	ND	1.37	--		1
1,1,2-Trichloroethane	ND	0.200	--	ND	1.09	--		1
1,1-Dichloroethane	ND	0.200	--	ND	0.809	--		1
1,1-Dichloroethene	ND	0.200	--	ND	0.792	--		1
1,2,4-Trichlorobenzene	ND	0.200	--	ND	1.48	--		1
1,2,4-Trimethylbenzene	ND	0.200	--	ND	0.982	--		1
1,2-Dibromoethane	ND	0.200	--	ND	1.54	--		1
1,2-Dichlorobenzene	ND	0.200	--	ND	1.20	--		1
1,2-Dichloroethane	ND	0.200	--	ND	0.809	--		1
1,2-Dichloropropane	ND	0.200	--	ND	0.924	--		1
1,3,5-Trimethybenzene	ND	0.200	--	ND	0.982	--		1
1,3-Dichlorobenzene	ND	0.200	--	ND	1.20	--		1
1,4-Dichlorobenzene	ND	0.200	--	ND	1.20	--		1
1,4-Dioxane	ND	0.200	--	ND	0.720	--		1
2-Butanone	0.555	0.200	--	1.64	0.589	--		1
2-Hexanone	ND	0.200	--	ND	0.819	--		1
Acetone	5.61	1.00	--	13.3	2.37	--		1
Benzene	1.13	0.200	--	3.62	0.638	--		1
Bromodichloromethane	ND	0.200	--	ND	1.34	--		1
Bromoform	ND	0.200	--	ND	2.06	--		1
Bromomethane	ND	0.200	--	ND	0.776	--		1
Carbon disulfide	ND	0.200	--	ND	0.622	--		1
Carbon tetrachloride	ND	0.200	--	ND	1.26	--		1
Chlorobenzene	ND	0.200	--	ND	0.920	--		1

Project Name:	CITY OF NEW BEDFORD	***Lab Number:***	L1005748
Project Number:	115058	***Report Date:***	05/11/10

SAMPLE RESULTS

Lab ID:	L1005748-15	Date Collected:	04/20/10 12:10
Client ID:	PVP-7	Date Received:	04/21/10
Sample Location:	NBHS	Field Prep:	Not Specified

	ppbV			ug/m3				
Parameter	**Results**	**RL**	**MDL**	**Results**	**RL**	**MDL**	**Qualifier**	**Dilution Factor**
Volatile Organics in Air (Low Level) - Mansfield Lab								
Chloroethane	ND	0.200	--	ND	0.527	--		1
Chloroform	ND	0.200	--	ND	0.976	--		1
Chloromethane	0.248	0.200	--	0.512	0.413	--		1
cis-1,2-Dichloroethene	ND	0.200	--	ND	0.792	--		1
cis-1,3-Dichloropropene	ND	0.200	--	ND	0.907	--		1
Dibromochloromethane	ND	0.200	--	ND	1.70	--		1
Dichlorodifluoromethane	0.524	0.200	--	2.59	0.988	--		1
Ethylbenzene	ND	0.200	--	ND	0.868	--		1
Hexachlorobutadiene	ND	0.200	--	ND	2.13	--		1
Methylene chloride	ND	0.500	--	ND	1.74	--		1
4-Methyl-2-pentanone	ND	0.200	--	ND	0.819	--		1
Methyl tert butyl ether	ND	0.200	--	ND	0.720	--		1
p/m-Xylene	ND	0.400	--	ND	1.74	--		1
o-Xylene	ND	0.200	--	ND	0.868	--		1
Styrene	ND	0.200	--	ND	0.851	--		1
Tetrachloroethene	0.693	0.200	--	4.70	1.36	--		1
Tetrahydrofuran	ND	0.200	--	ND	0.589	--		1
Toluene	0.203	0.200	--	0.764	0.753	--		1
trans-1,2-Dichloroethene	ND	0.200	--	ND	0.792	--		1
trans-1,3-Dichloropropene	ND	0.200	--	ND	0.907	--		1
Trichloroethene	ND	0.200	--	ND	1.07	--		1
Trichlorofluoromethane	0.252	0.200	--	1.41	1.12	--		1
Vinyl chloride	ND	0.200	--	ND	0.511	--		1
Naphthalene	ND	0.200	--	ND	1.05	--		1
1,1,1,2-Tetrachloroethane	ND	0.200	--	ND	1.37	--		1
Isopropylbenzene	ND	0.200	--	ND	0.982	--		1
1,2,3-Trichloropropane	ND	0.200	--	ND	1.20	--		1
Bromobenzene	ND	0.200	--	ND	1.28	--		1

Project Name:	CITY OF NEW BEDFORD	***Lab Number:***	L1005748
Project Number:	115058	***Report Date:***	05/11/10

SAMPLE RESULTS

Lab ID:	L1005748-15	Date Collected:	04/20/10 12:10
Client ID:	PVP-7	Date Received:	04/21/10
Sample Location:	NBHS	Field Prep:	Not Specified

	ppbV			ug/m3				
Parameter	**Results**	**RL**	**MDL**	**Results**	**RL**	**MDL**	**Qualifier**	**Dilution Factor**
Volatile Organics in Air (Low Level) - Mansfield Lab								
Dibromomethane	ND	0.200	--	ND	1.42	--		1
tert-Amyl Methyl Ether	ND	0.200	--	ND	0.835	--		1
2-Chlorotoluene	ND	0.200	--	ND	1.03	--		1
4-Chlorotoluene	ND	0.200	--	ND	1.03	--		1
2,2-Dichloropropane	ND	0.200	--	ND	0.923	--		1
1,1-Dichloropropene	ND	0.200	--	ND	0.907	--		1
Diisopropyl ether	ND	0.200	--	ND	0.835	--		1
tert-Butyl Ethyl Ether	ND	0.200	--	ND	0.835	--		1
1,2,3-Trichlorobenzene	ND	0.200	--	ND	1.48	--		1
Ethyl ether	ND	0.200	--	ND	0.606	--		1
n-Butylbenzene	ND	0.200	--	ND	1.10	--		1
sec-Butylbenzene	ND	0.200	--	ND	1.10	--		1
tert-Butylbenzene	ND	0.200	--	ND	1.10	--		1
1,2-Dibromo-3-chloropropane	ND	0.200	--	ND	1.93	--		1
p-Isopropyltoluene	ND	0.200	--	ND	1.10	--		1
n-Propylbenzene	ND	0.200	--	ND	0.982	--		1
1,3-Dichloropropane	ND	0.200	--	ND	0.923	--		1

Project Name:	CITY OF NEW BEDFORD	***Lab Number:***	L1005748
Project Number:	115058	***Report Date:***	05/11/10

SAMPLE RESULTS

Lab ID:	L1005748-16 D	Date Collected:	04/20/10 12:26
Client ID:	PVP-8	Date Received:	04/21/10
Sample Location:	NBHS	Field Prep:	Not Specified
Matrix:	Soil_Vapor		
Anaytical Method:	48,TO-15		
Analytical Date:	04/24/10 19:28		
Analyst:	AJ		

	ppbV			ug/m3				
Parameter	**Results**	**RL**	**MDL**	**Results**	**RL**	**MDL**	**Qualifier**	**Dilution Factor**
Volatile Organics in Air (Low Level) - Mansfield Lab								
1,1,1-Trichloroethane	ND	0.400	--	ND	2.18	--		2
1,1,2,2-Tetrachloroethane	ND	0.400	--	ND	2.74	--		2
1,1,2-Trichloroethane	ND	0.400	--	ND	2.18	--		2
1,1-Dichloroethane	ND	0.400	--	ND	1.62	--		2
1,1-Dichloroethene	ND	0.400	--	ND	1.58	--		2
1,2,4-Trichlorobenzene	ND	0.400	--	ND	2.97	--		2
1,2,4-Trimethylbenzene	ND	0.400	--	ND	1.96	--		2
1,2-Dibromoethane	ND	0.400	--	ND	3.07	--		2
1,2-Dichlorobenzene	ND	0.400	--	ND	2.40	--		2
1,2-Dichloroethane	ND	0.400	--	ND	1.62	--		2
1,2-Dichloropropane	ND	0.400	--	ND	1.85	--		2
1,3,5-Trimethybenzene	ND	0.400	--	ND	1.96	--		2
1,3-Dichlorobenzene	ND	0.400	--	ND	2.40	--		2
1,4-Dichlorobenzene	ND	0.400	--	ND	2.40	--		2
1,4-Dioxane	ND	0.400	--	ND	1.44	--		2
2-Butanone	2.14	0.400	--	6.32	1.18	--		2
2-Hexanone	ND	0.400	--	ND	1.64	--		2
Acetone	26.5	2.00	--	62.8	4.75	--		2
Benzene	3.26	0.400	--	10.4	1.28	--		2
Bromodichloromethane	ND	0.400	--	ND	2.68	--		2
Bromoform	ND	0.400	--	ND	4.13	--		2
Bromomethane	ND	0.400	--	ND	1.55	--		2
Carbon disulfide	ND	0.400	--	ND	1.24	--		2
Carbon tetrachloride	ND	0.400	--	ND	2.51	--		2
Chlorobenzene	ND	0.400	--	ND	1.84	--		2

Project Name:	CITY OF NEW BEDFORD	***Lab Number:***	L1005748
Project Number:	115058	***Report Date:***	05/11/10

SAMPLE RESULTS

Lab ID:	L1005748-16	D	Date Collected:	04/20/10 12:26
Client ID:	PVP-8		Date Received:	04/21/10
Sample Location:	NBHS		Field Prep:	Not Specified

	ppbV			ug/m3				
Parameter	**Results**	**RL**	**MDL**	**Results**	**RL**	**MDL**	**Qualifier**	**Dilution Factor**
Volatile Organics in Air (Low Level) - Mansfield Lab								
Chloroethane	ND	0.400	--	ND	1.05	--		2
Chloroform	ND	0.400	--	ND	1.95	--		2
Chloromethane	1.54	0.400	--	3.18	0.825	--		2
cis-1,2-Dichloroethene	ND	0.400	--	ND	1.58	--		2
cis-1,3-Dichloropropene	ND	0.400	--	ND	1.81	--		2
Dibromochloromethane	ND	0.400	--	ND	3.40	--		2
Dichlorodifluoromethane	0.572	0.400	--	2.83	1.98	--		2
Ethylbenzene	ND	0.400	--	ND	1.74	--		2
Hexachlorobutadiene	ND	0.400	--	ND	4.26	--		2
Methylene chloride	ND	1.00	--	ND	3.47	--		2
4-Methyl-2-pentanone	ND	0.400	--	ND	1.64	--		2
Methyl tert butyl ether	ND	0.400	--	ND	1.44	--		2
p/m-Xylene	ND	0.800	--	ND	3.47	--		2
o-Xylene	ND	0.400	--	ND	1.74	--		2
Styrene	ND	0.400	--	ND	1.70	--		2
Tetrachloroethene	9.13	0.400	--	61.9	2.71	--		2
Tetrahydrofuran	ND	0.400	--	ND	1.18	--		2
Toluene	ND	0.400	--	ND	1.51	--		2
trans-1,2-Dichloroethene	ND	0.400	--	ND	1.58	--		2
trans-1,3-Dichloropropene	ND	0.400	--	ND	1.81	--		2
Trichloroethene	ND	0.400	--	ND	2.15	--		2
Trichlorofluoromethane	ND	0.400	--	ND	2.24	--		2
Vinyl chloride	ND	0.400	--	ND	1.02	--		2
Naphthalene	ND	0.400	--	ND	2.10	--		2
1,1,1,2-Tetrachloroethane	ND	0.400	--	ND	2.74	--		2
Isopropylbenzene	ND	0.400	--	ND	1.96	--		2
1,2,3-Trichloropropane	ND	0.400	--	ND	2.41	--		2
Bromobenzene	ND	0.400	--	ND	2.57	--		2

Project Name:	CITY OF NEW BEDFORD	***Lab Number:***	L1005748
Project Number:	115058	***Report Date:***	05/11/10

SAMPLE RESULTS

Lab ID:	L1005748-16	D	Date Collected:	04/20/10 12:26
Client ID:	PVP-8		Date Received:	04/21/10
Sample Location:	NBHS		Field Prep:	Not Specified

	ppbV			ug/m3				
Parameter	**Results**	**RL**	**MDL**	**Results**	**RL**	**MDL**	**Qualifier**	**Dilution Factor**
Volatile Organics in Air (Low Level) - Mansfield Lab								
Dibromomethane	ND	0.400	--	ND	2.84	--		2
tert-Amyl Methyl Ether	ND	0.400	--	ND	1.67	--		2
2-Chlorotoluene	ND	0.400	--	ND	2.07	--		2
4-Chlorotoluene	ND	0.400	--	ND	2.07	--		2
2,2-Dichloropropane	ND	0.400	--	ND	1.85	--		2
1,1-Dichloropropene	ND	0.400	--	ND	1.81	--		2
Diisopropyl ether	ND	0.400	--	ND	1.67	--		2
tert-Butyl Ethyl Ether	ND	0.400	--	ND	1.67	--		2
1,2,3-Trichlorobenzene	ND	0.400	--	ND	2.97	--		2
Ethyl ether	ND	0.400	--	ND	1.21	--		2
n-Butylbenzene	ND	0.400	--	ND	2.19	--		2
sec-Butylbenzene	ND	0.400	--	ND	2.19	--		2
tert-Butylbenzene	ND	0.400	--	ND	2.19	--		2
1,2-Dibromo-3-chloropropane	ND	0.400	--	ND	3.86	--		2
p-Isopropyltoluene	ND	0.400	--	ND	2.19	--		2
n-Propylbenzene	ND	0.400	--	ND	1.96	--		2
1,3-Dichloropropane	ND	0.400	--	ND	1.85	--		2

Project Name:	CITY OF NEW BEDFORD	***Lab Number:***	L1005748
Project Number:	115058	***Report Date:***	05/11/10

SAMPLE RESULTS

Lab ID:	L1005748-17	Date Collected:	04/20/10 11:45
Client ID:	TRC-IA-9	Date Received:	04/21/10
Sample Location:	NBHS	Field Prep:	Not Specified
Matrix:	Air		
Anaytical Method:	48,TO-15		
Analytical Date:	04/27/10 19:47		
Analyst:	AJ		

	ppbV			ug/m3				
Parameter	**Results**	**RL**	**MDL**	**Results**	**RL**	**MDL**	**Qualifier**	**Dilution Factor**
Volatile Organics in Air (Low Level) - Mansfield Lab								
Dichlorodifluoromethane	0.395	0.200	--	1.95	0.988	--		1
Chloromethane	0.526	0.200	--	1.08	0.413	--		1
Vinyl chloride	ND	0.200	--	ND	0.511	--		1
Bromomethane	ND	0.200	--	ND	0.776	--		1
Chloroethane	ND	0.200	--	ND	0.527	--		1
Acetone	2.43	1.00	--	5.78	2.37	--		1
Trichlorofluoromethane	ND	0.200	--	ND	1.12	--		1
Ethyl ether	ND	0.200	--	ND	0.606	--		1
1,1-Dichloroethene	ND	0.200	--	ND	0.792	--		1
Methylene chloride	0.828	0.500	--	2.87	1.74	--		1
Carbon disulfide	ND	0.200	--	ND	0.622	--		1
trans-1,2-Dichloroethene	ND	0.200	--	ND	0.792	--		1
1,1-Dichloroethane	ND	0.200	--	ND	0.809	--		1
Methyl tert butyl ether	ND	0.200	--	ND	0.720	--		1
2-Butanone	ND	0.200	--	ND	0.589	--		1
cis-1,2-Dichloroethene	ND	0.200	--	ND	0.792	--		1
Chloroform	ND	0.200	--	ND	0.976	--		1
Tetrahydrofuran	ND	0.200	--	ND	0.589	--		1
2,2-Dichloropropane	ND	0.200	--	ND	0.923	--		1
1,2-Dichloroethane	ND	0.200	--	ND	0.809	--		1
Diisopropyl ether	ND	0.200	--	ND	0.835	--		1
tert-Butyl Ethyl Ether	ND	0.200	--	ND	0.835	--		1
1,1,1-Trichloroethane	ND	0.200	--	ND	1.09	--		1
1,1-Dichloropropene	ND	0.200	--	ND	0.907	--		1
Benzene	ND	0.200	--	ND	0.638	--		1

Project Name: CITY OF NEW BEDFORD **Lab Number:** L1005748

Project Number: 115058 **Report Date:** 05/11/10

SAMPLE RESULTS

Lab ID: L1005748-17 Date Collected: 04/20/10 11:45

Client ID: TRC-IA-9 Date Received: 04/21/10

Sample Location: NBHS Field Prep: Not Specified

Parameter	ppbV Results	ppbV RL	ppbV MDL	ug/m3 Results	ug/m3 RL	ug/m3 MDL	Qualifier	Dilution Factor
Volatile Organics in Air (Low Level) - Mansfield Lab								
Carbon tetrachloride	ND	0.200	--	ND	1.26	--		1
tert-Amyl Methyl Ether	ND	0.200	--	ND	0.835	--		1
Dibromomethane	ND	0.200	--	ND	1.42	--		1
1,2-Dichloropropane	ND	0.200	--	ND	0.924	--		1
Bromodichloromethane	ND	0.200	--	ND	1.34	--		1
1,4-Dioxane	ND	0.200	--	ND	0.720	--		1
Trichloroethene	ND	0.200	--	ND	1.07	--		1
cis-1,3-Dichloropropene	ND	0.200	--	ND	0.907	--		1
4-Methyl-2-pentanone	ND	0.200	--	ND	0.819	--		1
trans-1,3-Dichloropropene	ND	0.200	--	ND	0.907	--		1
1,1,2-Trichloroethane	ND	0.200	--	ND	1.09	--		1
Toluene	0.243	0.200	--	0.915	0.753	--		1
1,3-Dichloropropane	ND	0.200	--	ND	0.923	--		1
2-Hexanone	ND	0.200	--	ND	0.819	--		1
Dibromochloromethane	ND	0.200	--	ND	1.70	--		1
1,2-Dibromoethane	ND	0.200	--	ND	1.54	--		1
Tetrachloroethene	ND	0.200	--	ND	1.36	--		1
1,1,1,2-Tetrachloroethane	ND	0.200	--	ND	1.37	--		1
Chlorobenzene	ND	0.200	--	ND	0.920	--		1
Ethylbenzene	ND	0.200	--	ND	0.868	--		1
p/m-Xylene	ND	0.400	--	ND	1.74	--		1
Bromoform	ND	0.200	--	ND	2.06	--		1
Styrene	ND	0.200	--	ND	0.851	--		1
1,1,2,2-Tetrachloroethane	ND	0.200	--	ND	1.37	--		1
o-Xylene	ND	0.200	--	ND	0.868	--		1
1,2,3-Trichloropropane	ND	0.200	--	ND	1.20	--		1
Isopropylbenzene	ND	0.200	--	ND	0.982	--		1
Bromobenzene	ND	0.200	--	ND	1.28	--		1

Project Name: CITY OF NEW BEDFORD **Lab Number:** L1005748

Project Number: 115058 **Report Date:** 05/11/10

SAMPLE RESULTS

Lab ID: L1005748-17 Date Collected: 04/20/10 11:45

Client ID: TRC-IA-9 Date Received: 04/21/10

Sample Location: NBHS Field Prep: Not Specified

Parameter	ppbV Results	ppbV RL	ppbV MDL	ug/m3 Results	ug/m3 RL	ug/m3 MDL	Qualifier	Dilution Factor
Volatile Organics in Air (Low Level) - Mansfield Lab								
2-Chlorotoluene	ND	0.200	--	ND	1.03	--		1
n-Propylbenzene	ND	0.200	--	ND	0.982	--		1
4-Chlorotoluene	ND	0.200	--	ND	1.03	--		1
1,3,5-Trimethybenzene	ND	0.200	--	ND	0.982	--		1
tert-Butylbenzene	ND	0.200	--	ND	1.10	--		1
1,2,4-Trimethylbenzene	ND	0.200	--	ND	0.982	--		1
1,3-Dichlorobenzene	ND	0.200	--	ND	1.20	--		1
1,4-Dichlorobenzene	ND	0.200	--	ND	1.20	--		1
sec-Butylbenzene	ND	0.200	--	ND	1.10	--		1
p-Isopropyltoluene	ND	0.200	--	ND	1.10	--		1
1,2-Dichlorobenzene	ND	0.200	--	ND	1.20	--		1
n-Butylbenzene	ND	0.200	--	ND	1.10	--		1
1,2-Dibromo-3-chloropropane	ND	0.200	--	ND	1.93	--		1
1,2,4-Trichlorobenzene	ND	0.200	--	ND	1.48	--		1
Naphthalene	ND	0.200	--	ND	1.05	--		1
1,2,3-Trichlorobenzene	ND	0.200	--	ND	1.48	--		1
Hexachlorobutadiene	ND	0.200	--	ND	2.13	--		1

Project Name:	CITY OF NEW BEDFORD	***Lab Number:***	L1005748
Project Number:	115058	***Report Date:***	05/11/10

SAMPLE RESULTS

Lab ID:	L1005748-17	Date Collected:	04/20/10 11:45
Client ID:	TRC-IA-9	Date Received:	04/21/10
Sample Location:	NBHS	Field Prep:	Not Specified
Matrix:	Air		
Anaytical Method:	48,TO-15-SIM		
Analytical Date:	04/27/10 19:47		
Analyst:	AJ		

	ppbV			ug/m3				
Parameter	**Results**	**RL**	**MDL**	**Results**	**RL**	**MDL**	**Qualifier**	**Dilution Factor**
Volatile Organics in Air by SIM - Mansfield Lab								
Vinyl chloride	ND	0.020	--	ND	0.051	--		1
trans-1,2-Dichloroethene	ND	0.020	--	ND	0.079	--		1
cis-1,2-Dichloroethene	0.030	0.020	--	0.119	0.079	--		1
Chloroform	ND	0.020	--	ND	0.098	--		1
1,2-Dichloroethane	ND	0.020	--	ND	0.081	--		1
Benzene	0.111	0.100	--	0.354	0.319	--		1
Carbon tetrachloride	0.086	0.020	--	0.541	0.126	--		1
1,2-Dichloropropane	ND	0.020	--	ND	0.092	--		1
Bromodichloromethane	ND	0.020	--	ND	0.134	--		1
Trichloroethene	ND	0.020	--	ND	0.107	--		1
1,4-Dioxane	ND	0.100	--	ND	0.360	--		1
cis-1,3-Dichloropropene	ND	0.020	--	ND	0.091	--		1
trans-1,3-Dichloropropene	ND	0.020	--	ND	0.091	--		1
1,1,2-Trichloroethane	ND	0.020	--	ND	0.109	--		1
Dibromochloromethane	ND	0.020	--	ND	0.096	--		1
1,2-Dibromoethane	ND	0.020	--	ND	0.154	--		1
Tetrachloroethene	0.029	0.020	--	0.196	0.136	--		1
1,1,2,2-Tetrachloroethane	ND	0.020	--	ND	0.137	--		1
1,4-Dichlorobenzene	ND	0.020	--	ND	0.120	--		1
Naphthalene	ND	0.050	--	ND	0.262	--		1
Hexachlorobutadiene	ND	0.050	--	ND	0.192	--		1

Project Name:	CITY OF NEW BEDFORD	***Lab Number:***	L1005748
Project Number:	115058	***Report Date:***	05/11/10

SAMPLE RESULTS

Lab ID:	L1005748-18	Date Collected:	04/20/10 10:00
Client ID:	TRC-IA-15	Date Received:	04/21/10
Sample Location:	NBHS	Field Prep:	Not Specified
Matrix:	Air		
Anaytical Method:	48,TO-15		
Analytical Date:	04/25/10 00:46		
Analyst:	AJ		

	ppbV			ug/m3				
Parameter	**Results**	**RL**	**MDL**	**Results**	**RL**	**MDL**	**Qualifier**	**Dilution Factor**
Volatile Organics in Air (Low Level) - Mansfield Lab								
Dichlorodifluoromethane	0.461	0.200	--	2.28	0.988	--		1
Chloromethane	0.543	0.200	--	1.12	0.413	--		1
Vinyl chloride	ND	0.200	--	ND	0.511	--		1
Bromomethane	ND	0.200	--	ND	0.776	--		1
Chloroethane	ND	0.200	--	ND	0.527	--		1
Acetone	3.46	1.00	--	8.21	2.37	--		1
Trichlorofluoromethane	0.282	0.200	--	1.58	1.12	--		1
Ethyl ether	ND	0.200	--	ND	0.606	--		1
1,1-Dichloroethene	ND	0.200	--	ND	0.792	--		1
Methylene chloride	ND	0.500	--	ND	1.74	--		1
Carbon disulfide	ND	0.200	--	ND	0.622	--		1
trans-1,2-Dichloroethene	ND	0.200	--	ND	0.792	--		1
1,1-Dichloroethane	ND	0.200	--	ND	0.809	--		1
Methyl tert butyl ether	1.32	0.200	--	4.74	0.720	--		1
2-Butanone	0.828	0.200	--	2.44	0.589	--		1
cis-1,2-Dichloroethene	ND	0.200	--	ND	0.792	--		1
Chloroform	ND	0.200	--	ND	0.976	--		1
Tetrahydrofuran	ND	0.200	--	ND	0.589	--		1
2,2-Dichloropropane	ND	0.200	--	ND	0.923	--		1
1,2-Dichloroethane	ND	0.200	--	ND	0.809	--		1
Diisopropyl ether	ND	0.200	--	ND	0.835	--		1
tert-Butyl Ethyl Ether	ND	0.200	--	ND	0.835	--		1
1,1,1-Trichloroethane	1.31	0.200	--	7.14	1.09	--		1
1,1-Dichloropropene	ND	0.200	--	ND	0.907	--		1
Benzene	1.40	0.200	--	4.48	0.638	--		1

Project Name: CITY OF NEW BEDFORD **Lab Number:** L1005748

Project Number: 115058 **Report Date:** 05/11/10

SAMPLE RESULTS

Lab ID: L1005748-18 Date Collected: 04/20/10 10:00

Client ID: TRC-IA-15 Date Received: 04/21/10

Sample Location: NBHS Field Prep: Not Specified

Parameter	ppbV Results	ppbV RL	ppbV MDL	ug/m3 Results	ug/m3 RL	ug/m3 MDL	Qualifier	Dilution Factor
Volatile Organics in Air (Low Level) - Mansfield Lab								
Carbon tetrachloride	ND	0.200	--	ND	1.26	--		1
tert-Amyl Methyl Ether	ND	0.200	--	ND	0.835	--		1
Dibromomethane	ND	0.200	--	ND	1.42	--		1
1,2-Dichloropropane	ND	0.200	--	ND	0.924	--		1
Bromodichloromethane	ND	0.200	--	ND	1.34	--		1
1,4-Dioxane	ND	0.200	--	ND	0.720	--		1
Trichloroethene	ND	0.200	--	ND	1.07	--		1
cis-1,3-Dichloropropene	ND	0.200	--	ND	0.907	--		1
4-Methyl-2-pentanone	ND	0.200	--	ND	0.819	--		1
trans-1,3-Dichloropropene	ND	0.200	--	ND	0.907	--		1
1,1,2-Trichloroethane	ND	0.200	--	ND	1.09	--		1
Toluene	9.80	0.200	--	36.9	0.753	--		1
1,3-Dichloropropane	ND	0.200	--	ND	0.923	--		1
2-Hexanone	ND	0.200	--	ND	0.819	--		1
Dibromochloromethane	ND	0.200	--	ND	1.70	--		1
1,2-Dibromoethane	ND	0.200	--	ND	1.54	--		1
Tetrachloroethene	0.248	0.200	--	1.68	1.36	--		1
1,1,1,2-Tetrachloroethane	ND	0.200	--	ND	1.37	--		1
Chlorobenzene	ND	0.200	--	ND	0.920	--		1
Ethylbenzene	1.38	0.200	--	6.00	0.868	--		1
p/m-Xylene	4.33	0.400	--	18.8	1.74	--		1
Bromoform	ND	0.200	--	ND	2.06	--		1
Styrene	ND	0.200	--	ND	0.851	--		1
1,1,2,2-Tetrachloroethane	ND	0.200	--	ND	1.37	--		1
o-Xylene	1.54	0.200	--	6.69	0.868	--		1
1,2,3-Trichloropropane	ND	0.200	--	ND	1.20	--		1
Isopropylbenzene	ND	0.200	--	ND	0.982	--		1
Bromobenzene	ND	0.200	--	ND	1.28	--		1

Project Name: CITY OF NEW BEDFORD **Lab Number:** L1005748

Project Number: 115058 **Report Date:** 05/11/10

SAMPLE RESULTS

Lab ID: L1005748-18 Date Collected: 04/20/10 10:00

Client ID: TRC-IA-15 Date Received: 04/21/10

Sample Location: NBHS Field Prep: Not Specified

Parameter	ppbV Results	ppbV RL	ppbV MDL	ug/m3 Results	ug/m3 RL	ug/m3 MDL	Qualifier	Dilution Factor
Volatile Organics in Air (Low Level) - Mansfield Lab								
2-Chlorotoluene	ND	0.200	--	ND	1.03	--		1
n-Propylbenzene	0.302	0.200	--	1.48	0.982	--		1
4-Chlorotoluene	ND	0.200	--	ND	1.03	--		1
1,3,5-Trimethybenzene	0.430	0.200	--	2.11	0.982	--		1
tert-Butylbenzene	ND	0.200	--	ND	1.10	--		1
1,2,4-Trimethylbenzene	1.42	0.200	--	6.96	0.982	--		1
1,3-Dichlorobenzene	ND	0.200	--	ND	1.20	--		1
1,4-Dichlorobenzene	ND	0.200	--	ND	1.20	--		1
sec-Butylbenzene	ND	0.200	--	ND	1.10	--		1
p-Isopropyltoluene	ND	0.200	--	ND	1.10	--		1
1,2-Dichlorobenzene	ND	0.200	--	ND	1.20	--		1
n-Butylbenzene	ND	0.200	--	ND	1.10	--		1
1,2-Dibromo-3-chloropropane	ND	0.200	--	ND	1.93	--		1
1,2,4-Trichlorobenzene	ND	0.200	--	ND	1.48	--		1
Naphthalene	ND	0.200	--	ND	1.05	--		1
1,2,3-Trichlorobenzene	ND	0.200	--	ND	1.48	--		1
Hexachlorobutadiene	ND	0.200	--	ND	2.13	--		1

Project Name:	CITY OF NEW BEDFORD	***Lab Number:***	L1005748
Project Number:	115058	***Report Date:***	05/11/10

SAMPLE RESULTS

Lab ID:	L1005748-18	Date Collected:	04/20/10 10:00
Client ID:	TRC-IA-15	Date Received:	04/21/10
Sample Location:	NBHS	Field Prep:	Not Specified
Matrix:	Air		
Anaytical Method:	48,TO-15-SIM		
Analytical Date:	04/25/10 00:46		
Analyst:	AJ		

	ppbV			ug/m3				
Parameter	**Results**	**RL**	**MDL**	**Results**	**RL**	**MDL**	**Qualifier**	**Dilution Factor**
Volatile Organics in Air by SIM - Mansfield Lab								
Vinyl chloride	ND	0.020	--	ND	0.051	--		1
trans-1,2-Dichloroethene	ND	0.020	--	ND	0.079	--		1
cis-1,2-Dichloroethene	ND	0.020	--	ND	0.079	--		1
Chloroform	0.121	0.020	--	0.590	0.098	--		1
1,2-Dichloroethane	ND	0.020	--	ND	0.081	--		1
Benzene	1.30	0.100	--	4.14	0.319	--		1
Carbon tetrachloride	0.076	0.020	--	0.478	0.126	--		1
1,2-Dichloropropane	ND	0.020	--	ND	0.092	--		1
Bromodichloromethane	ND	0.020	--	ND	0.134	--		1
Trichloroethene	0.020	0.020	--	0.107	0.107	--		1
1,4-Dioxane	ND	0.100	--	ND	0.360	--		1
cis-1,3-Dichloropropene	ND	0.020	--	ND	0.091	--		1
trans-1,3-Dichloropropene	ND	0.020	--	ND	0.091	--		1
1,1,2-Trichloroethane	ND	0.020	--	ND	0.109	--		1
Dibromochloromethane	ND	0.020	--	ND	0.096	--		1
1,2-Dibromoethane	ND	0.020	--	ND	0.154	--		1
Tetrachloroethene	0.260	0.020	--	1.76	0.136	--		1
1,1,2,2-Tetrachloroethane	ND	0.020	--	ND	0.137	--		1
1,4-Dichlorobenzene	ND	0.020	--	ND	0.120	--		1
Naphthalene	0.123	0.050	--	0.644	0.262	--		1
Hexachlorobutadiene	ND	0.050	--	ND	0.192	--		1

Project Name:	CITY OF NEW BEDFORD	***Lab Number:***	L1005748
Project Number:	115058	***Report Date:***	05/11/10

SAMPLE RESULTS

Lab ID:	L1005748-19	Date Collected:	04/20/10 10:04
Client ID:	TRC-IA-1	Date Received:	04/21/10
Sample Location:	NBHS	Field Prep:	Not Specified
Matrix:	Air		
Anaytical Method:	48,TO-15		
Analytical Date:	04/27/10 18:00		
Analyst:	AJ		

	ppbV			ug/m3				
Parameter	**Results**	**RL**	**MDL**	**Results**	**RL**	**MDL**	**Qualifier**	**Dilution Factor**
Volatile Organics in Air (Low Level) - Mansfield Lab								
Dichlorodifluoromethane	0.459	0.200	--	2.27	0.988	--		1
Chloromethane	0.505	0.200	--	1.04	0.413	--		1
Vinyl chloride	0.334	0.200	--	0.853	0.511	--		1
Bromomethane	ND	0.200	--	ND	0.776	--		1
Chloroethane	ND	0.200	--	ND	0.527	--		1
Acetone	1.09	1.00	--	2.58	2.37	--		1
Trichlorofluoromethane	0.223	0.200	--	1.25	1.12	--		1
Ethyl ether	ND	0.200	--	ND	0.606	--		1
1,1-Dichloroethene	ND	0.200	--	ND	0.792	--		1
Methylene chloride	ND	0.500	--	ND	1.74	--		1
Carbon disulfide	ND	0.200	--	ND	0.622	--		1
trans-1,2-Dichloroethene	1.42	0.200	--	5.62	0.792	--		1
1,1-Dichloroethane	ND	0.200	--	ND	0.809	--		1
Methyl tert butyl ether	ND	0.200	--	ND	0.720	--		1
2-Butanone	1.55	0.200	--	4.57	0.589	--		1
cis-1,2-Dichloroethene	3.84	0.200	--	15.2	0.792	--		1
Chloroform	ND	0.200	--	ND	0.976	--		1
Tetrahydrofuran	ND	0.200	--	ND	0.589	--		1
2,2-Dichloropropane	ND	0.200	--	ND	0.923	--		1
1,2-Dichloroethane	ND	0.200	--	ND	0.809	--		1
Diisopropyl ether	ND	0.200	--	ND	0.835	--		1
tert-Butyl Ethyl Ether	ND	0.200	--	ND	0.835	--		1
1,1,1-Trichloroethane	ND	0.200	--	ND	1.09	--		1
1,1-Dichloropropene	ND	0.200	--	ND	0.907	--		1
Benzene	1.72	0.200	--	5.50	0.638	--		1

Project Name:	CITY OF NEW BEDFORD	***Lab Number:***	L1005748
Project Number:	115058	***Report Date:***	05/11/10

SAMPLE RESULTS

Lab ID:	L1005748-19	Date Collected:	04/20/10 10:04
Client ID:	TRC-IA-1	Date Received:	04/21/10
Sample Location:	NBHS	Field Prep:	Not Specified

	ppbV			ug/m3				
Parameter	**Results**	**RL**	**MDL**	**Results**	**RL**	**MDL**	**Qualifier**	**Dilution Factor**
Volatile Organics in Air (Low Level) - Mansfield Lab								
Carbon tetrachloride	ND	0.200	--	ND	1.26	--		1
tert-Amyl Methyl Ether	ND	0.200	--	ND	0.835	--		1
Dibromomethane	ND	0.200	--	ND	1.42	--		1
1,2-Dichloropropane	ND	0.200	--	ND	0.924	--		1
Bromodichloromethane	ND	0.200	--	ND	1.34	--		1
1,4-Dioxane	ND	0.200	--	ND	0.720	--		1
Trichloroethene	2.04	0.200	--	10.9	1.07	--		1
cis-1,3-Dichloropropene	ND	0.200	--	ND	0.907	--		1
4-Methyl-2-pentanone	ND	0.200	--	ND	0.819	--		1
trans-1,3-Dichloropropene	ND	0.200	--	ND	0.907	--		1
1,1,2-Trichloroethane	ND	0.200	--	ND	1.09	--		1
Toluene	11.1	0.200	--	42.0	0.753	--		1
1,3-Dichloropropane	ND	0.200	--	ND	0.923	--		1
2-Hexanone	ND	0.200	--	ND	0.819	--		1
Dibromochloromethane	ND	0.200	--	ND	1.70	--		1
1,2-Dibromoethane	ND	0.200	--	ND	1.54	--		1
Tetrachloroethene	ND	0.200	--	ND	1.36	--		1
1,1,1,2-Tetrachloroethane	ND	0.200	--	ND	1.37	--		1
Chlorobenzene	ND	0.200	--	ND	0.920	--		1
Ethylbenzene	1.38	0.200	--	5.99	0.868	--		1
p/m-Xylene	5.63	0.400	--	24.4	1.74	--		1
Bromoform	ND	0.200	--	ND	2.06	--		1
Styrene	ND	0.200	--	ND	0.851	--		1
1,1,2,2-Tetrachloroethane	ND	0.200	--	ND	1.37	--		1
o-Xylene	1.73	0.200	--	7.49	0.868	--		1
1,2,3-Trichloropropane	ND	0.200	--	ND	1.20	--		1
Isopropylbenzene	ND	0.200	--	ND	0.982	--		1
Bromobenzene	ND	0.200	--	ND	1.28	--		1

Project Name:	CITY OF NEW BEDFORD	***Lab Number:***	L1005748
Project Number:	115058	***Report Date:***	05/11/10

SAMPLE RESULTS

Lab ID:	L1005748-19	Date Collected:	04/20/10 10:04
Client ID:	TRC-IA-1	Date Received:	04/21/10
Sample Location:	NBHS	Field Prep:	Not Specified

	ppbV			ug/m3				
Parameter	**Results**	**RL**	**MDL**	**Results**	**RL**	**MDL**	**Qualifier**	**Dilution Factor**
Volatile Organics in Air (Low Level) - Mansfield Lab								
2-Chlorotoluene	ND	0.200	--	ND	1.03	--		1
n-Propylbenzene	0.304	0.200	--	1.49	0.982	--		1
4-Chlorotoluene	ND	0.200	--	ND	1.03	--		1
1,3,5-Trimethybenzene	0.517	0.200	--	2.54	0.982	--		1
tert-Butylbenzene	ND	0.200	--	ND	1.10	--		1
1,2,4-Trimethylbenzene	1.84	0.200	--	9.04	0.982	--		1
1,3-Dichlorobenzene	ND	0.200	--	ND	1.20	--		1
1,4-Dichlorobenzene	ND	0.200	--	ND	1.20	--		1
sec-Butylbenzene	ND	0.200	--	ND	1.10	--		1
p-Isopropyltoluene	ND	0.200	--	ND	1.10	--		1
1,2-Dichlorobenzene	ND	0.200	--	ND	1.20	--		1
n-Butylbenzene	ND	0.200	--	ND	1.10	--		1
1,2-Dibromo-3-chloropropane	ND	0.200	--	ND	1.93	--		1
1,2,4-Trichlorobenzene	ND	0.200	--	ND	1.48	--		1
Naphthalene	ND	0.200	--	ND	1.05	--		1
1,2,3-Trichlorobenzene	ND	0.200	--	ND	1.48	--		1
Hexachlorobutadiene	ND	0.200	--	ND	2.13	--		1

Project Name:	CITY OF NEW BEDFORD	***Lab Number:***	L1005748
Project Number:	115058	***Report Date:***	05/11/10

SAMPLE RESULTS

Lab ID:	L1005748-19	Date Collected:	04/20/10 10:04
Client ID:	TRC-IA-1	Date Received:	04/21/10
Sample Location:	NBHS	Field Prep:	Not Specified
Matrix:	Air		
Anaytical Method:	48,TO-15-SIM		
Analytical Date:	04/27/10 18:00		
Analyst:	AJ		

	ppbV			ug/m3				
Parameter	**Results**	**RL**	**MDL**	**Results**	**RL**	**MDL**	**Qualifier**	**Dilution Factor**
Volatile Organics in Air by SIM - Mansfield Lab								
Vinyl chloride	0.317	0.020	--	0.810	0.051	--		1
trans-1,2-Dichloroethene	1.41	0.020	--	5.58	0.079	--		1
cis-1,2-Dichloroethene	3.73	0.020	--	14.8	0.079	--		1
Chloroform	0.033	0.020	--	0.161	0.098	--		1
1,2-Dichloroethane	0.027	0.020	--	0.109	0.081	--		1
Benzene	1.58	0.100	--	5.05	0.319	--		1
Carbon tetrachloride	0.081	0.020	--	0.509	0.126	--		1
1,2-Dichloropropane	ND	0.020	--	ND	0.092	--		1
Bromodichloromethane	ND	0.020	--	ND	0.134	--		1
Trichloroethene	2.02	0.020	--	10.8	0.107	--		1
1,4-Dioxane	ND	0.100	--	ND	0.360	--		1
cis-1,3-Dichloropropene	ND	0.020	--	ND	0.091	--		1
trans-1,3-Dichloropropene	ND	0.020	--	ND	0.091	--		1
1,1,2-Trichloroethane	ND	0.020	--	ND	0.109	--		1
Dibromochloromethane	ND	0.020	--	ND	0.096	--		1
1,2-Dibromoethane	ND	0.020	--	ND	0.154	--		1
Tetrachloroethene	ND	0.020	--	ND	0.136	--		1
1,1,2,2-Tetrachloroethane	ND	0.020	--	ND	0.137	--		1
1,4-Dichlorobenzene	ND	0.020	--	ND	0.120	--		1
Naphthalene	0.130	0.050	--	0.681	0.262	--		1
Hexachlorobutadiene	ND	0.050	--	ND	0.192	--		1

Project Name:	CITY OF NEW BEDFORD	***Lab Number:***	L1005748
Project Number:	115058	***Report Date:***	05/11/10

SAMPLE RESULTS

Lab ID:	L1005748-20 D	Date Collected:	04/20/10 14:31
Client ID:	PVP-6	Date Received:	04/21/10
Sample Location:	NBHS	Field Prep:	Not Specified
Matrix:	Soil_Vapor		
Anaytical Method:	48,TO-15		
Analytical Date:	04/24/10 20:06		
Analyst:	AJ		

	ppbV			ug/m3				
Parameter	**Results**	**RL**	**MDL**	**Results**	**RL**	**MDL**	**Qualifier**	**Dilution Factor**
Volatile Organics in Air (Low Level) - Mansfield Lab								
1,1,1-Trichloroethane	ND	11.3	--	ND	61.6	--		56.45
1,1,2,2-Tetrachloroethane	ND	11.3	--	ND	77.4	--		56.45
1,1,2-Trichloroethane	ND	11.3	--	ND	61.6	--		56.45
1,1-Dichloroethane	ND	11.3	--	ND	45.6	--		56.45
1,1-Dichloroethene	79.1	11.3	--	313	44.7	--		56.45
1,2,4-Trichlorobenzene	ND	11.3	--	ND	83.7	--		56.45
1,2,4-Trimethylbenzene	ND	11.3	--	ND	55.4	--		56.45
1,2-Dibromoethane	ND	11.3	--	ND	86.7	--		56.45
1,2-Dichlorobenzene	ND	11.3	--	ND	67.8	--		56.45
1,2-Dichloroethane	ND	11.3	--	ND	45.6	--		56.45
1,2-Dichloropropane	ND	11.3	--	ND	52.1	--		56.45
1,3,5-Trimethybenzene	ND	11.3	--	ND	55.4	--		56.45
1,3-Dichlorobenzene	ND	11.3	--	ND	67.8	--		56.45
1,4-Dichlorobenzene	ND	11.3	--	ND	67.8	--		56.45
1,4-Dioxane	ND	11.3	--	ND	40.6	--		56.45
2-Butanone	ND	11.3	--	ND	33.3	--		56.45
2-Hexanone	ND	11.3	--	ND	46.2	--		56.45
Acetone	ND	56.4	--	ND	134.	--		56.45
Benzene	ND	11.3	--	ND	36.0	--		56.45
Bromodichloromethane	ND	11.3	--	ND	75.6	--		56.45
Bromoform	ND	11.3	--	ND	117.	--		56.45
Bromomethane	ND	11.3	--	ND	43.8	--		56.45
Carbon disulfide	ND	11.3	--	ND	35.1	--		56.45
Carbon tetrachloride	ND	11.3	--	ND	71.0	--		56.45
Chlorobenzene	ND	11.3	--	ND	51.9	--		56.45

Project Name: CITY OF NEW BEDFORD **Lab Number:** L1005748

Project Number: 115058 **Report Date:** 05/11/10

SAMPLE RESULTS

Lab ID: L1005748-20 D Date Collected: 04/20/10 14:31

Client ID: PVP-6 Date Received: 04/21/10

Sample Location: NBHS Field Prep: Not Specified

Parameter	ppbV Results	ppbV RL	ppbV MDL	ug/m3 Results	ug/m3 RL	ug/m3 MDL	Qualifier	Dilution Factor
Volatile Organics in Air (Low Level) - Mansfield Lab								
Chloroethane	ND	11.3	--	ND	29.8	--		56.45
Chloroform	ND	11.3	--	ND	55.1	--		56.45
Chloromethane	ND	11.3	--	ND	23.3	--		56.45
cis-1,2-Dichloroethene	694	11.3	--	2750	44.7	--		56.45
cis-1,3-Dichloropropene	ND	11.3	--	ND	51.2	--		56.45
Dibromochloromethane	ND	11.3	--	ND	96.1	--		56.45
Dichlorodifluoromethane	ND	11.3	--	ND	55.8	--		56.45
Ethylbenzene	ND	11.3	--	ND	49.0	--		56.45
Hexachlorobutadiene	ND	11.3	--	ND	120.	--		56.45
Methylene chloride	ND	28.2	--	ND	98.0	--		56.45
4-Methyl-2-pentanone	ND	11.3	--	ND	46.2	--		56.45
Methyl tert butyl ether	ND	11.3	--	ND	40.7	--		56.45
p/m-Xylene	ND	22.6	--	ND	98.0	--		56.45
o-Xylene	ND	11.3	--	ND	49.0	--		56.45
Styrene	ND	11.3	--	ND	48.0	--		56.45
Tetrachloroethene	ND	11.3	--	ND	76.5	--		56.45
Tetrahydrofuran	ND	11.3	--	ND	33.3	--		56.45
Toluene	ND	11.3	--	ND	42.5	--		56.45
trans-1,2-Dichloroethene	9360	11.3	--	37100	44.7	--	E	56.45
trans-1,3-Dichloropropene	ND	11.3	--	ND	51.2	--		56.45
Trichloroethene	671	11.3	--	3600	60.6	--		56.45
Trichlorofluoromethane	ND	11.3	--	ND	63.4	--		56.45
Vinyl chloride	586	11.3	--	1500	28.8	--		56.45
Naphthalene	ND	11.3	--	ND	59.1	--		56.45
1,1,1,2-Tetrachloroethane	ND	11.3	--	ND	77.4	--		56.45
Isopropylbenzene	ND	11.3	--	ND	55.4	--		56.45
1,2,3-Trichloropropane	ND	11.3	--	ND	68.0	--		56.45
Bromobenzene	ND	11.3	--	ND	72.4	--		56.45

Project Name:	CITY OF NEW BEDFORD	***Lab Number:***	L1005748
Project Number:	115058	***Report Date:***	05/11/10

SAMPLE RESULTS

Lab ID:	L1005748-20	D	Date Collected:	04/20/10 14:31
Client ID:	PVP-6		Date Received:	04/21/10
Sample Location:	NBHS		Field Prep:	Not Specified

	ppbV			ug/m3				
Parameter	**Results**	**RL**	**MDL**	**Results**	**RL**	**MDL**	**Qualifier**	**Dilution Factor**
Volatile Organics in Air (Low Level) - Mansfield Lab								
Dibromomethane	ND	11.3	--	ND	80.2	--		56.45
tert-Amyl Methyl Ether	ND	11.3	--	ND	47.1	--		56.45
2-Chlorotoluene	ND	11.3	--	ND	58.4	--		56.45
4-Chlorotoluene	ND	11.3	--	ND	58.4	--		56.45
2,2-Dichloropropane	ND	11.3	--	ND	52.1	--		56.45
1,1-Dichloropropene	ND	11.3	--	ND	51.2	--		56.45
Diisopropyl ether	ND	11.3	--	ND	47.1	--		56.45
tert-Butyl Ethyl Ether	ND	11.3	--	ND	47.2	--		56.45
1,2,3-Trichlorobenzene	ND	11.3	--	ND	83.7	--		56.45
Ethyl ether	ND	11.3	--	ND	34.2	--		56.45
n-Butylbenzene	ND	11.3	--	ND	61.9	--		56.45
sec-Butylbenzene	ND	11.3	--	ND	61.9	--		56.45
tert-Butylbenzene	ND	11.3	--	ND	61.9	--		56.45
1,2-Dibromo-3-chloropropane	ND	11.3	--	ND	109.	--		56.45
p-Isopropyltoluene	ND	11.3	--	ND	61.9	--		56.45
n-Propylbenzene	ND	11.3	--	ND	55.4	--		56.45
1,3-Dichloropropane	ND	11.3	--	ND	52.1	--		56.45

Project Name:	CITY OF NEW BEDFORD	***Lab Number:***	L1005748
Project Number:	115058	***Report Date:***	05/11/10

SAMPLE RESULTS

Lab ID:	L1005748-20	D3	Date Collected:	04/20/10 14:31
Client ID:	PVP-6		Date Received:	04/21/10
Sample Location:	NBHS		Field Prep:	Not Specified
Matrix:	Soil_Vapor			
Anaytical Method:	48,TO-15			
Analytical Date:	04/26/10 23:50			
Analyst:	AJ			

	ppbV			ug/m3				
Parameter	**Results**	**RL**	**MDL**	**Results**	**RL**	**MDL**	**Qualifier**	**Dilution Factor**
Volatile Organics in Air (Low Level) - Mansfield Lab								
trans-1,2-Dichloroethene	9950	28.2	--	39400	112	--		141.1

Project Name: CITY OF NEW BEDFORD **Lab Number:** L1005748

Project Number: 115058 **Report Date:** 05/11/10

Method Blank Analysis
Batch Quality Control

Analytical Method: 48,TO-15-SIM
Analytical Date: 04/24/10 12:06

Parameter	ppbV Results	ppbV RL	ppbV MDL	ug/m3 Results	ug/m3 RL	ug/m3 MDL	Qualifier	Dilution Factor
Volatile Organics in Air by SIM - Mansfield Lab for sample(s): 03-05,08,11,13-14,18 Batch: WG409612-4								
Vinyl chloride	ND	0.020	--	ND	0.051	--		1
trans-1,2-Dichloroethene	ND	0.020	--	ND	0.079	--		1
cis-1,2-Dichloroethene	ND	0.020	--	ND	0.079	--		1
Chloroform	ND	0.020	--	ND	0.098	--		1
1,2-Dichloroethane	ND	0.020	--	ND	0.081	--		1
Benzene	ND	0.100	--	ND	0.319	--		1
Carbon tetrachloride	ND	0.020	--	ND	0.126	--		1
1,2-Dichloropropane	ND	0.020	--	ND	0.092	--		1
Bromodichloromethane	ND	0.020	--	ND	0.134	--		1
Trichloroethene	ND	0.020	--	ND	0.107	--		1
1,4-Dioxane	ND	0.100	--	ND	0.360	--		1
cis-1,3-Dichloropropene	ND	0.020	--	ND	0.091	--		1
trans-1,3-Dichloropropene	ND	0.020	--	ND	0.091	--		1
1,1,2-Trichloroethane	ND	0.020	--	ND	0.109	--		1
Dibromochloromethane	ND	0.020	--	ND	0.096	--		1
1,2-Dibromoethane	ND	0.020	--	ND	0.154	--		1
Tetrachloroethene	ND	0.020	--	ND	0.136	--		1
1,1,2,2-Tetrachloroethane	ND	0.020	--	ND	0.137	--		1
1,4-Dichlorobenzene	ND	0.020	--	ND	0.120	--		1
Naphthalene	ND	0.050	--	ND	0.262	--		1
Hexachlorobutadiene	ND	0.050	--	ND	0.192	--		1

Project Name: CITY OF NEW BEDFORD **Lab Number:** L1005748

Project Number: 115058 **Report Date:** 05/11/10

Method Blank Analysis
Batch Quality Control

Analytical Method: 48,TO-15
Analytical Date: 04/24/10 12:06

Parameter	ppbV Results	ppbV RL	ppbV MDL	ug/m3 Results	ug/m3 RL	ug/m3 MDL	Qualifier	Dilution Factor
Volatile Organics in Air (Low Level) - Mansfield Lab for sample(s): 03-05,08,11,13-14,18 Batch: WG409613-4								
1,1,1-Trichloroethane	ND	0.200	--	ND	1.09	--		1
1,1,2,2-Tetrachloroethane	ND	0.200	--	ND	1.37	--		1
1,1,2-Trichloroethane	ND	0.200	--	ND	1.09	--		1
1,1-Dichloroethane	ND	0.200	--	ND	0.809	--		1
1,1-Dichloroethene	ND	0.200	--	ND	0.792	--		1
1,2,4-Trichlorobenzene	ND	0.200	--	ND	1.48	--		1
1,2,4-Trimethylbenzene	ND	0.200	--	ND	0.982	--		1
1,2-Dibromoethane	ND	0.200	--	ND	1.54	--		1
1,2-Dichlorobenzene	ND	0.200	--	ND	1.20	--		1
1,2-Dichloroethane	ND	0.200	--	ND	0.809	--		1
1,2-Dichloropropane	ND	0.200	--	ND	0.924	--		1
1,3,5-Trimethybenzene	ND	0.200	--	ND	0.982	--		1
1,3-Dichlorobenzene	ND	0.200	--	ND	1.20	--		1
1,4-Dichlorobenzene	ND	0.200	--	ND	1.20	--		1
1,4-Dioxane	ND	0.200	--	ND	0.720	--		1
2-Butanone	ND	0.200	--	ND	0.589	--		1
2-Hexanone	ND	0.200	--	ND	0.819	--		1
Acetone	ND	1.00	--	ND	2.37	--		1
Benzene	ND	0.200	--	ND	0.638	--		1
Bromodichloromethane	ND	0.200	--	ND	1.34	--		1
Bromoform	ND	0.200	--	ND	2.06	--		1
Bromomethane	ND	0.200	--	ND	0.776	--		1
Carbon disulfide	ND	0.200	--	ND	0.622	--		1
Carbon tetrachloride	ND	0.200	--	ND	1.26	--		1
Chlorobenzene	ND	0.200	--	ND	0.920	--		1

Project Name: CITY OF NEW BEDFORD **Lab Number:** L1005748

Project Number: 115058 **Report Date:** 05/11/10

Method Blank Analysis
Batch Quality Control

Analytical Method: 48,TO-15
Analytical Date: 04/24/10 12:06

Parameter	ppbV Results	ppbV RL	ppbV MDL	ug/m3 Results	ug/m3 RL	ug/m3 MDL	Qualifier	Dilution Factor
Volatile Organics in Air (Low Level) - Mansfield Lab for sample(s): 03-05,08,11,13-14,18 Batch: WG409613-4								
Chloroethane	ND	0.200	--	ND	0.527	--		1
Chloroform	ND	0.200	--	ND	0.976	--		1
Chloromethane	ND	0.200	--	ND	0.413	--		1
cis-1,2-Dichloroethene	ND	0.200	--	ND	0.792	--		1
cis-1,3-Dichloropropene	ND	0.200	--	ND	0.907	--		1
Dibromochloromethane	ND	0.200	--	ND	1.70	--		1
Dichlorodifluoromethane	ND	0.200	--	ND	0.988	--		1
Ethylbenzene	ND	0.200	--	ND	0.868	--		1
Hexachlorobutadiene	ND	0.200	--	ND	2.13	--		1
Methylene chloride	ND	0.500	--	ND	1.74	--		1
4-Methyl-2-pentanone	ND	0.200	--	ND	0.819	--		1
Methyl tert butyl ether	ND	0.200	--	ND	0.720	--		1
p/m-Xylene	ND	0.400	--	ND	1.74	--		1
o-Xylene	ND	0.200	--	ND	0.868	--		1
Styrene	ND	0.200	--	ND	0.851	--		1
Tetrachloroethene	ND	0.200	--	ND	1.36	--		1
Tetrahydrofuran	ND	0.200	--	ND	0.589	--		1
Toluene	ND	0.200	--	ND	0.753	--		1
trans-1,2-Dichloroethene	ND	0.200	--	ND	0.792	--		1
trans-1,3-Dichloropropene	ND	0.200	--	ND	0.907	--		1
Trichloroethene	ND	0.200	--	ND	1.07	--		1
Trichlorofluoromethane	ND	0.200	--	ND	1.12	--		1
Vinyl chloride	ND	0.200	--	ND	0.511	--		1
Naphthalene	ND	0.200	--	ND	1.05	--		1
1,1,1,2-Tetrachloroethane	ND	0.200	--	ND	1.37	--		1

Project Name: CITY OF NEW BEDFORD **Lab Number:** L1005748

Project Number: 115058 **Report Date:** 05/11/10

Method Blank Analysis
Batch Quality Control

Analytical Method: 48,TO-15
Analytical Date: 04/24/10 12:06

Parameter	ppbV Results	ppbV RL	ppbV MDL	ug/m3 Results	ug/m3 RL	ug/m3 MDL	Qualifier	Dilution Factor
Volatile Organics in Air (Low Level) - Mansfield Lab for sample(s): 03-05,08,11,13-14,18 Batch: WG409613-4								
Isopropylbenzene	ND	0.200	--	ND	0.982	--		1
1,2,3-Trichloropropane	ND	0.200	--	ND	1.20	--		1
Bromobenzene	ND	0.200	--	ND	1.28	--		1
Dibromomethane	ND	0.200	--	ND	1.42	--		1
tert-Amyl Methyl Ether	ND	0.200	--	ND	0.835	--		1
2-Chlorotoluene	ND	0.200	--	ND	1.03	--		1
4-Chlorotoluene	ND	0.200	--	ND	1.03	--		1
2,2-Dichloropropane	ND	0.200	--	ND	0.923	--		1
1,1-Dichloropropene	ND	0.200	--	ND	0.907	--		1
Diisopropyl ether	ND	0.200	--	ND	0.835	--		1
tert-Butyl Ethyl Ether	ND	0.200	--	ND	0.835	--		1
1,2,3-Trichlorobenzene	ND	0.200	--	ND	1.48	--		1
Ethyl ether	ND	0.200	--	ND	0.606	--		1
n-Butylbenzene	ND	0.200	--	ND	1.10	--		1
sec-Butylbenzene	ND	0.200	--	ND	1.10	--		1
tert-Butylbenzene	ND	0.200	--	ND	1.10	--		1
1,2-Dibromo-3-chloropropane	ND	0.200	--	ND	1.93	--		1
p-Isopropyltoluene	ND	0.200	--	ND	1.10	--		1
n-Propylbenzene	ND	0.200	--	ND	0.982	--		1
1,3-Dichloropropane	ND	0.200	--	ND	0.923	--		1

Project Name: CITY OF NEW BEDFORD **Lab Number:** L1005748

Project Number: 115058 **Report Date:** 05/11/10

Method Blank Analysis
Batch Quality Control

Analytical Method: 48,TO-15
Analytical Date: 04/24/10 13:50

Parameter	ppbV Results	ppbV RL	ppbV MDL	ug/m3 Results	ug/m3 RL	ug/m3 MDL	Qualifier	Dilution Factor
Volatile Organics in Air (Low Level) - Mansfield Lab for sample(s): 06-07,09,12,15-16,20 Batch: WG409614-4								
1,1,1-Trichloroethane	ND	0.200	--	ND	1.09	--		1
1,1,2,2-Tetrachloroethane	ND	0.200	--	ND	1.37	--		1
1,1,2-Trichloroethane	ND	0.200	--	ND	1.09	--		1
1,1-Dichloroethane	ND	0.200	--	ND	0.809	--		1
1,1-Dichloroethene	ND	0.200	--	ND	0.792	--		1
1,2,4-Trichlorobenzene	ND	0.200	--	ND	1.48	--		1
1,2,4-Trimethylbenzene	ND	0.200	--	ND	0.982	--		1
1,2-Dibromoethane	ND	0.200	--	ND	1.54	--		1
1,2-Dichlorobenzene	ND	0.200	--	ND	1.20	--		1
1,2-Dichloroethane	ND	0.200	--	ND	0.809	--		1
1,2-Dichloropropane	ND	0.200	--	ND	0.924	--		1
1,3,5-Trimethybenzene	ND	0.200	--	ND	0.982	--		1
1,3-Dichlorobenzene	ND	0.200	--	ND	1.20	--		1
1,4-Dichlorobenzene	ND	0.200	--	ND	1.20	--		1
1,4-Dioxane	ND	0.200	--	ND	0.720	--		1
2-Butanone	ND	0.200	--	ND	0.589	--		1
2-Hexanone	ND	0.200	--	ND	0.819	--		1
Acetone	ND	1.00	--	ND	2.37	--		1
Benzene	ND	0.200	--	ND	0.638	--		1
Bromodichloromethane	ND	0.200	--	ND	1.34	--		1
Bromoform	ND	0.200	--	ND	2.06	--		1
Bromomethane	ND	0.200	--	ND	0.776	--		1
Carbon disulfide	ND	0.200	--	ND	0.622	--		1
Carbon tetrachloride	ND	0.200	--	ND	1.26	--		1
Chlorobenzene	ND	0.200	--	ND	0.920	--		1

Project Name: CITY OF NEW BEDFORD **Lab Number:** L1005748

Project Number: 115058 **Report Date:** 05/11/10

Method Blank Analysis
Batch Quality Control

Analytical Method: 48,TO-15
Analytical Date: 04/24/10 13:50

Parameter	ppbV Results	ppbV RL	ppbV MDL	ug/m3 Results	ug/m3 RL	ug/m3 MDL	Qualifier	Dilution Factor
Volatile Organics in Air (Low Level) - Mansfield Lab for sample(s): 06-07,09,12,15-16,20 Batch: WG409614-4								
Chloroethane	ND	0.200	--	ND	0.527	--		1
Chloroform	ND	0.200	--	ND	0.976	--		1
Chloromethane	ND	0.200	--	ND	0.413	--		1
cis-1,2-Dichloroethene	ND	0.200	--	ND	0.792	--		1
cis-1,3-Dichloropropene	ND	0.200	--	ND	0.907	--		1
Dibromochloromethane	ND	0.200	--	ND	1.70	--		1
Dichlorodifluoromethane	ND	0.200	--	ND	0.988	--		1
Ethylbenzene	ND	0.200	--	ND	0.868	--		1
Hexachlorobutadiene	ND	0.200	--	ND	2.13	--		1
Methylene chloride	ND	0.500	--	ND	1.74	--		1
4-Methyl-2-pentanone	ND	0.200	--	ND	0.819	--		1
Methyl tert butyl ether	ND	0.200	--	ND	0.720	--		1
p/m-Xylene	ND	0.400	--	ND	1.74	--		1
o-Xylene	ND	0.200	--	ND	0.868	--		1
Styrene	ND	0.200	--	ND	0.851	--		1
Tetrachloroethene	ND	0.200	--	ND	1.36	--		1
Tetrahydrofuran	ND	0.200	--	ND	0.589	--		1
Toluene	ND	0.200	--	ND	0.753	--		1
trans-1,2-Dichloroethene	ND	0.200	--	ND	0.792	--		1
trans-1,3-Dichloropropene	ND	0.200	--	ND	0.907	--		1
Trichloroethene	ND	0.200	--	ND	1.07	--		1
Trichlorofluoromethane	ND	0.200	--	ND	1.12	--		1
Vinyl chloride	ND	0.200	--	ND	0.511	--		1
Naphthalene	ND	0.200	--	ND	1.05	--		1
1,1,1,2-Tetrachloroethane	ND	0.200	--	ND	1.37	--		1

Project Name: CITY OF NEW BEDFORD **Lab Number:** L1005748

Project Number: 115058 **Report Date:** 05/11/10

Method Blank Analysis
Batch Quality Control

Analytical Method: 48,TO-15
Analytical Date: 04/24/10 13:50

Parameter	ppbV Results	ppbV RL	ppbV MDL	ug/m3 Results	ug/m3 RL	ug/m3 MDL	Qualifier	Dilution Factor
Volatile Organics in Air (Low Level) - Mansfield Lab for sample(s): 06-07,09,12,15-16,20 Batch: WG409614-4								
Isopropylbenzene	ND	0.200	--	ND	0.982	--		1
1,2,3-Trichloropropane	ND	0.200	--	ND	1.20	--		1
Bromobenzene	ND	0.200	--	ND	1.28	--		1
Dibromomethane	ND	0.200	--	ND	1.42	--		1
tert-Amyl Methyl Ether	ND	0.200	--	ND	0.835	--		1
2-Chlorotoluene	ND	0.200	--	ND	1.03	--		1
4-Chlorotoluene	ND	0.200	--	ND	1.03	--		1
2,2-Dichloropropane	ND	0.200	--	ND	0.923	--		1
1,1-Dichloropropene	ND	0.200	--	ND	0.907	--		1
Diisopropyl ether	ND	0.200	--	ND	0.835	--		1
tert-Butyl Ethyl Ether	ND	0.200	--	ND	0.835	--		1
1,2,3-Trichlorobenzene	ND	0.200	--	ND	1.48	--		1
Ethyl ether	ND	0.200	--	ND	0.606	--		1
n-Butylbenzene	ND	0.200	--	ND	1.10	--		1
sec-Butylbenzene	ND	0.200	--	ND	1.10	--		1
tert-Butylbenzene	ND	0.200	--	ND	1.10	--		1
1,2-Dibromo-3-chloropropane	ND	0.200	--	ND	1.93	--		1
p-Isopropyltoluene	ND	0.200	--	ND	1.10	--		1
n-Propylbenzene	ND	0.200	--	ND	0.982	--		1
1,3-Dichloropropane	ND	0.200	--	ND	0.923	--		1

Project Name: CITY OF NEW BEDFORD **Lab Number:** L1005748

Project Number: 115058 **Report Date:** 05/11/10

Method Blank Analysis
Batch Quality Control

Analytical Method: 48,TO-15
Analytical Date: 04/26/10 15:24

Parameter	ppbV Results	ppbV RL	ppbV MDL	ug/m3 Results	ug/m3 RL	ug/m3 MDL	Qualifier	Dilution Factor
Volatile Organics in Air (Low Level) - Mansfield Lab for sample(s): 01,20 Batch: WG409614-9								
1,1,1-Trichloroethane	ND	0.200	--	ND	1.09	--		1
1,1,2,2-Tetrachloroethane	ND	0.200	--	ND	1.37	--		1
1,1,2-Trichloroethane	ND	0.200	--	ND	1.09	--		1
1,1-Dichloroethane	ND	0.200	--	ND	0.809	--		1
1,1-Dichloroethene	ND	0.200	--	ND	0.792	--		1
1,2,4-Trichlorobenzene	ND	0.200	--	ND	1.48	--		1
1,2,4-Trimethylbenzene	ND	0.200	--	ND	0.982	--		1
1,2-Dibromoethane	ND	0.200	--	ND	1.54	--		1
1,2-Dichlorobenzene	ND	0.200	--	ND	1.20	--		1
1,2-Dichloroethane	ND	0.200	--	ND	0.809	--		1
1,2-Dichloropropane	ND	0.200	--	ND	0.924	--		1
1,3,5-Trimethybenzene	ND	0.200	--	ND	0.982	--		1
1,3-Dichlorobenzene	ND	0.200	--	ND	1.20	--		1
1,4-Dichlorobenzene	ND	0.200	--	ND	1.20	--		1
1,4-Dioxane	ND	0.200	--	ND	0.720	--		1
2-Butanone	ND	0.200	--	ND	0.589	--		1
2-Hexanone	ND	0.200	--	ND	0.819	--		1
Acetone	ND	1.00	--	ND	2.37	--		1
Benzene	ND	0.200	--	ND	0.638	--		1
Bromodichloromethane	ND	0.200	--	ND	1.34	--		1
Bromoform	ND	0.200	--	ND	2.06	--		1
Bromomethane	ND	0.200	--	ND	0.776	--		1
Carbon disulfide	ND	0.200	--	ND	0.622	--		1
Carbon tetrachloride	ND	0.200	--	ND	1.26	--		1
Chlorobenzene	ND	0.200	--	ND	0.920	--		1

Project Name: CITY OF NEW BEDFORD **Lab Number:** L1005748

Project Number: 115058 **Report Date:** 05/11/10

Method Blank Analysis
Batch Quality Control

Analytical Method: 48,TO-15
Analytical Date: 04/26/10 15:24

Parameter	ppbV Results	ppbV RL	ppbV MDL	ug/m3 Results	ug/m3 RL	ug/m3 MDL	Qualifier	Dilution Factor
Volatile Organics in Air (Low Level) - Mansfield Lab for sample(s): 01,20 Batch: WG409614-9								
Chloroethane	ND	0.200	--	ND	0.527	--		1
Chloroform	ND	0.200	--	ND	0.976	--		1
Chloromethane	ND	0.200	--	ND	0.413	--		1
cis-1,2-Dichloroethene	ND	0.200	--	ND	0.792	--		1
cis-1,3-Dichloropropene	ND	0.200	--	ND	0.907	--		1
Dibromochloromethane	ND	0.200	--	ND	1.70	--		1
Dichlorodifluoromethane	ND	0.200	--	ND	0.988	--		1
Ethylbenzene	ND	0.200	--	ND	0.868	--		1
Hexachlorobutadiene	ND	0.200	--	ND	2.13	--		1
Methylene chloride	ND	0.500	--	ND	1.74	--		1
4-Methyl-2-pentanone	ND	0.200	--	ND	0.819	--		1
Methyl tert butyl ether	ND	0.200	--	ND	0.720	--		1
p/m-Xylene	ND	0.400	--	ND	1.74	--		1
o-Xylene	ND	0.200	--	ND	0.868	--		1
Styrene	ND	0.200	--	ND	0.851	--		1
Tetrachloroethene	ND	0.200	--	ND	1.36	--		1
Tetrahydrofuran	ND	0.200	--	ND	0.589	--		1
Toluene	ND	0.200	--	ND	0.753	--		1
trans-1,2-Dichloroethene	ND	0.200	--	ND	0.792	--		1
trans-1,3-Dichloropropene	ND	0.200	--	ND	0.907	--		1
Trichloroethene	ND	0.200	--	ND	1.07	--		1
Trichlorofluoromethane	ND	0.200	--	ND	1.12	--		1
Vinyl chloride	ND	0.200	--	ND	0.511	--		1
Naphthalene	ND	0.200	--	ND	1.05	--		1
1,1,1,2-Tetrachloroethane	ND	0.200	--	ND	1.37	--		1

Project Name: CITY OF NEW BEDFORD
Project Number: 115058

Lab Number: L1005748
Report Date: 05/11/10

Method Blank Analysis
Batch Quality Control

Analytical Method: 48,TO-15
Analytical Date: 04/26/10 15:24

Parameter	ppbV Results	ppbV RL	ppbV MDL	ug/m3 Results	ug/m3 RL	ug/m3 MDL	Qualifier	Dilution Factor
Volatile Organics in Air (Low Level) - Mansfield Lab for sample(s): 01,20 Batch: WG409614-9								
Isopropylbenzene	ND	0.200	--	ND	0.982	--		1
1,2,3-Trichloropropane	ND	0.200	--	ND	1.20	--		1
Bromobenzene	ND	0.200	--	ND	1.28	--		1
Dibromomethane	ND	0.200	--	ND	1.42	--		1
tert-Amyl Methyl Ether	ND	0.200	--	ND	0.835	--		1
2-Chlorotoluene	ND	0.200	--	ND	1.03	--		1
4-Chlorotoluene	ND	0.200	--	ND	1.03	--		1
2,2-Dichloropropane	ND	0.200	--	ND	0.923	--		1
1,1-Dichloropropene	ND	0.200	--	ND	0.907	--		1
Diisopropyl ether	ND	0.200	--	ND	0.835	--		1
tert-Butyl Ethyl Ether	ND	0.200	--	ND	0.835	--		1
1,2,3-Trichlorobenzene	ND	0.200	--	ND	1.48	--		1
Ethyl ether	ND	0.200	--	ND	0.606	--		1
n-Butylbenzene	ND	0.200	--	ND	1.10	--		1
sec-Butylbenzene	ND	0.200	--	ND	1.10	--		1
tert-Butylbenzene	ND	0.200	--	ND	1.10	--		1
1,2-Dibromo-3-chloropropane	ND	0.200	--	ND	1.93	--		1
p-Isopropyltoluene	ND	0.200	--	ND	1.10	--		1
n-Propylbenzene	ND	0.200	--	ND	0.982	--		1
1,3-Dichloropropane	ND	0.200	--	ND	0.923	--		1

Project Name: CITY OF NEW BEDFORD **Lab Number:** L1005748

Project Number: 115058 **Report Date:** 05/11/10

Method Blank Analysis
Batch Quality Control

Analytical Method: 48,TO-15
Analytical Date: 04/27/10 17:25

Parameter	ppbV Results	ppbV RL	ppbV MDL	ug/m3 Results	ug/m3 RL	ug/m3 MDL	Qualifier	Dilution Factor
Volatile Organics in Air (Low Level) - Mansfield Lab for sample(s): 02,10,17,19 Batch: WG410010-4								
Dichlorodifluoromethane	ND	0.200	--	ND	0.988	--		1
Chloromethane	ND	0.200	--	ND	0.413	--		1
Vinyl chloride	ND	0.200	--	ND	0.511	--		1
Bromomethane	ND	0.200	--	ND	0.776	--		1
Chloroethane	ND	0.200	--	ND	0.527	--		1
Acetone	ND	1.00	--	ND	2.37	--		1
Trichlorofluoromethane	ND	0.200	--	ND	1.12	--		1
Ethyl ether	ND	0.200	--	ND	0.606	--		1
1,1-Dichloroethene	ND	0.200	--	ND	0.792	--		1
Methylene chloride	ND	0.500	--	ND	1.74	--		1
Carbon disulfide	ND	0.200	--	ND	0.622	--		1
trans-1,2-Dichloroethene	ND	0.200	--	ND	0.792	--		1
1,1-Dichloroethane	ND	0.200	--	ND	0.809	--		1
Methyl tert butyl ether	ND	0.200	--	ND	0.720	--		1
2-Butanone	ND	0.200	--	ND	0.589	--		1
cis-1,2-Dichloroethene	ND	0.200	--	ND	0.792	--		1
Chloroform	ND	0.200	--	ND	0.976	--		1
Tetrahydrofuran	ND	0.200	--	ND	0.589	--		1
2,2-Dichloropropane	ND	0.200	--	ND	0.923	--		1
1,2-Dichloroethane	ND	0.200	--	ND	0.809	--		1
Diisopropyl ether	ND	0.200	--	ND	0.835	--		1
tert-Butyl Ethyl Ether	ND	0.200	--	ND	0.835	--		1
1,1,1-Trichloroethane	ND	0.200	--	ND	1.09	--		1
1,1-Dichloropropene	ND	0.200	--	ND	0.907	--		1
Benzene	ND	0.200	--	ND	0.638	--		1

Project Name: CITY OF NEW BEDFORD **Lab Number:** L1005748

Project Number: 115058 **Report Date:** 05/11/10

Method Blank Analysis
Batch Quality Control

Analytical Method: 48,TO-15
Analytical Date: 04/27/10 17:25

Parameter	ppbV Results	ppbV RL	ppbV MDL	ug/m3 Results	ug/m3 RL	ug/m3 MDL	Qualifier	Dilution Factor
Volatile Organics in Air (Low Level) - Mansfield Lab for sample(s): 02,10,17,19 Batch: WG410010-4								
Carbon tetrachloride	ND	0.200	--	ND	1.26	--		1
tert-Amyl Methyl Ether	ND	0.200	--	ND	0.835	--		1
Dibromomethane	ND	0.200	--	ND	1.42	--		1
1,2-Dichloropropane	ND	0.200	--	ND	0.924	--		1
Bromodichloromethane	ND	0.200	--	ND	1.34	--		1
1,4-Dioxane	ND	0.200	--	ND	0.720	--		1
Trichloroethene	ND	0.200	--	ND	1.07	--		1
cis-1,3-Dichloropropene	ND	0.200	--	ND	0.907	--		1
4-Methyl-2-pentanone	ND	0.200	--	ND	0.819	--		1
trans-1,3-Dichloropropene	ND	0.200	--	ND	0.907	--		1
1,1,2-Trichloroethane	ND	0.200	--	ND	1.09	--		1
Toluene	ND	0.200	--	ND	0.753	--		1
1,3-Dichloropropane	ND	0.200	--	ND	0.923	--		1
2-Hexanone	ND	0.200	--	ND	0.819	--		1
Dibromochloromethane	ND	0.200	--	ND	1.70	--		1
1,2-Dibromoethane	ND	0.200	--	ND	1.54	--		1
Tetrachloroethene	ND	0.200	--	ND	1.36	--		1
1,1,1,2-Tetrachloroethane	ND	0.200	--	ND	1.37	--		1
Chlorobenzene	ND	0.200	--	ND	0.920	--		1
Ethylbenzene	ND	0.200	--	ND	0.868	--		1
p/m-Xylene	ND	0.400	--	ND	1.74	--		1
Bromoform	ND	0.200	--	ND	2.06	--		1
Styrene	ND	0.200	--	ND	0.851	--		1
1,1,2,2-Tetrachloroethane	ND	0.200	--	ND	1.37	--		1
o-Xylene	ND	0.200	--	ND	0.868	--		1

Project Name: CITY OF NEW BEDFORD **Lab Number:** L1005748

Project Number: 115058 **Report Date:** 05/11/10

Method Blank Analysis
Batch Quality Control

Analytical Method: 48,TO-15
Analytical Date: 04/27/10 17:25

Parameter	ppbV Results	ppbV RL	ppbV MDL	ug/m3 Results	ug/m3 RL	ug/m3 MDL	Qualifier	Dilution Factor
Volatile Organics in Air (Low Level) - Mansfield Lab for sample(s): 02,10,17,19 Batch: WG410010-4								
1,2,3-Trichloropropane	ND	0.200	--	ND	1.20	--		1
Isopropylbenzene	ND	0.200	--	ND	0.982	--		1
Bromobenzene	ND	0.200	--	ND	1.28	--		1
2-Chlorotoluene	ND	0.200	--	ND	1.03	--		1
n-Propylbenzene	ND	0.200	--	ND	0.982	--		1
4-Chlorotoluene	ND	0.200	--	ND	1.03	--		1
1,3,5-Trimethybenzene	ND	0.200	--	ND	0.982	--		1
tert-Butylbenzene	ND	0.200	--	ND	1.10	--		1
1,2,4-Trimethylbenzene	ND	0.200	--	ND	0.982	--		1
1,3-Dichlorobenzene	ND	0.200	--	ND	1.20	--		1
1,4-Dichlorobenzene	ND	0.200	--	ND	1.20	--		1
sec-Butylbenzene	ND	0.200	--	ND	1.10	--		1
p-Isopropyltoluene	ND	0.200	--	ND	1.10	--		1
1,2-Dichlorobenzene	ND	0.200	--	ND	1.20	--		1
n-Butylbenzene	ND	0.200	--	ND	1.10	--		1
1,2-Dibromo-3-chloropropane	ND	0.200	--	ND	1.93	--		1
1,2,4-Trichlorobenzene	ND	0.200	--	ND	1.48	--		1
Naphthalene	ND	0.200	--	ND	1.05	--		1
1,2,3-Trichlorobenzene	ND	0.200	--	ND	1.48	--		1
Hexachlorobutadiene	ND	0.200	--	ND	2.13	--		1

Project Name: CITY OF NEW BEDFORD **Lab Number:** L1005748

Project Number: 115058 **Report Date:** 05/11/10

Method Blank Analysis
Batch Quality Control

Analytical Method: 48,TO-15-SIM
Analytical Date: 04/27/10 17:25

Parameter	ppbV Results	ppbV RL	ppbV MDL	ug/m3 Results	ug/m3 RL	ug/m3 MDL	Qualifier	Dilution Factor
Volatile Organics in Air by SIM - Mansfield Lab for sample(s): 02,10,17,19 Batch: WG410013-4								
Vinyl chloride	ND	0.020	--	ND	0.051	--		1
trans-1,2-Dichloroethene	ND	0.020	--	ND	0.079	--		1
cis-1,2-Dichloroethene	ND	0.020	--	ND	0.079	--		1
Chloroform	ND	0.020	--	ND	0.098	--		1
1,2-Dichloroethane	ND	0.020	--	ND	0.081	--		1
Benzene	ND	0.100	--	ND	0.319	--		1
Carbon tetrachloride	ND	0.020	--	ND	0.126	--		1
1,2-Dichloropropane	ND	0.020	--	ND	0.092	--		1
Bromodichloromethane	ND	0.020	--	ND	0.134	--		1
Trichloroethene	ND	0.020	--	ND	0.107	--		1
1,4-Dioxane	ND	0.100	--	ND	0.360	--		1
cis-1,3-Dichloropropene	ND	0.020	--	ND	0.091	--		1
trans-1,3-Dichloropropene	ND	0.020	--	ND	0.091	--		1
1,1,2-Trichloroethane	ND	0.020	--	ND	0.109	--		1
Dibromochloromethane	ND	0.020	--	ND	0.096	--		1
1,2-Dibromoethane	ND	0.020	--	ND	0.154	--		1
Tetrachloroethene	ND	0.020	--	ND	0.136	--		1
1,1,2,2-Tetrachloroethane	ND	0.020	--	ND	0.137	--		1
1,4-Dichlorobenzene	ND	0.020	--	ND	0.120	--		1
Naphthalene	ND	0.050	--	ND	0.262	--		1
Hexachlorobutadiene	ND	0.050	--	ND	0.192	--		1

Lab Control Sample Analysis
Batch Quality Control

Project Name: CITY OF NEW BEDFORD
Project Number: 115058

Lab Number: L1005748
Report Date: 05/11/10

Parameter	LCS %Recovery	Qual	LCSD %Recovery	Qual	%Recovery Limits	RPD	Qual	RPD Limits
Volatile Organics in Air by SIM - Mansfield Lab Associated sample(s): 03-05,08,11,13-14,18 Batch: WG409612-3								
Dichlorodifluoromethane	98		-		70-130	-		25
Chloromethane	96		-		70-130	-		25
1,2-Dichloro-1,1,2,2-tetrafluoroethane	107		-		70-130	-		25
Vinyl chloride	107		-		70-130	-		25
1,3-Butadiene	107		-		70-130	-		25
Bromomethane	98		-		70-130	-		25
Chloroethane	91		-		70-130	-		25
Acetone	75		-		70-130	-		25
Trichlorofluoromethane	105		-		70-130	-		25
Acrylonitrile	73		-		70-130	-		25
1,1-Dichloroethene	98		-		70-130	-		25
Methylene chloride	88		-		70-130	-		25
1,1,2-Trichloro-1,2,2-Trifluoroethane	95		-		70-130	-		25
Halothane	84		-		70-130	-		25
trans-1,2-Dichloroethene	89		-		70-130	-		25
1,1-Dichloroethane	84		-		70-130	-		25
Methyl tert butyl ether	71		-		70-130	-		25
2-Butanone	91		-		70-130	-		25
cis-1,2-Dichloroethene	87		-		70-130	-		25
Chloroform	88		-		70-130	-		25
1,2-Dichloroethane	79		-		70-130	-		25

Lab Control Sample Analysis
Batch Quality Control

Project Name: CITY OF NEW BEDFORD
Project Number: 115058

Lab Number: L1005748
Report Date: 05/11/10

Parameter	LCS %Recovery	Qual	LCSD %Recovery	Qual	%Recovery Limits	RPD	Qual	RPD Limits
Volatile Organics in Air by SIM - Mansfield Lab Associated sample(s): 03-05,08,11,13-14,18 Batch: WG409612-3								
1,1,1-Trichloroethane	92		-		70-130	-		25
Benzene	75		-		70-130	-		25
Carbon tetrachloride	102		-		70-130	-		25
1,2-Dichloropropane	71		-		70-130	-		25
Bromodichloromethane	84		-		70-130	-		25
Trichloroethene	94		-		70-130	-		25
1,4-Dioxane	93		-		70-130	-		25
cis-1,3-Dichloropropene	80		-		70-130	-		25
4-Methyl-2-pentanone	76		-		70-130	-		25
trans-1,3-Dichloropropene	**68**	Q	-		70-130	-		25
1,1,2-Trichloroethane	78		-		70-130	-		25
Toluene	78		-		70-130	-		25
Dibromochloromethane	99		-		70-130	-		25
1,2-Dibromoethane	91		-		70-130	-		25
Tetrachloroethene	108		-		70-130	-		25
1,1,1,2-Tetrachloroethane	85		-		70-130	-		25
Chlorobenzene	92		-		70-130	-		25
Ethylbenzene	82		-		70-130	-		25
p/m-Xylene	84		-		70-130	-		25
Bromoform	105		-		70-130	-		25
Styrene	95		-		70-130	-		25

Lab Control Sample Analysis
Batch Quality Control

Project Name: CITY OF NEW BEDFORD
Project Number: 115058

Lab Number: L1005748
Report Date: 05/11/10

Parameter	LCS %Recovery	Qual	LCSD %Recovery	Qual	%Recovery Limits	RPD	Qual	RPD Limits
Volatile Organics in Air by SIM - Mansfield Lab Associated sample(s): 03-05,08,11,13-14,18 Batch: WG409612-3								
1,1,2,2-Tetrachloroethane	88		-		70-130	-		25
o-Xylene	84		-		70-130	-		25
Isopropylbenzene	85		-		70-130	-		25
1,3,5-Trimethylbenzene	97		-		70-130	-		25
1,2,4-Trimethylbenzene	100		-		70-130	-		25
1,3-Dichlorobenzene	108		-		70-130	-		25
1,4-Dichlorobenzene	110		-		70-130	-		25
sec-Butylbenzene	91		-		70-130	-		25
p-Isopropyltoluene	90		-		70-130	-		25
1,2-Dichlorobenzene	108		-		70-130	-		25
n-Butylbenzene	98		-		70-130	-		25
1,2,4-Trichlorobenzene	**139**	Q	-		70-130	-		25
Naphthalene	127		-		70-130	-		25
1,2,3-Trichlorobenzene	**143**	Q	-		70-130	-		25
Hexachlorobutadiene	116		-		70-130	-		25

Lab Control Sample Analysis
Batch Quality Control

Project Name: CITY OF NEW BEDFORD
Project Number: 115058

Lab Number: L1005748
Report Date: 05/11/10

Parameter	LCS %Recovery	Qual	LCSD %Recovery	Qual	%Recovery Limits	RPD	Qual	RPD Limits
Volatile Organics in Air (Low Level) - Mansfield Lab Associated sample(s): 03-05,08,11,13-14,18 Batch: WG409613-3								
1,1,1-Trichloroethane	89		-		70-130	-		
1,1,2,2-Tetrachloroethane	108		-		70-130	-		
1,1,2-Trichloroethane	91		-		70-130	-		
1,1-Dichloroethane	88		-		70-130	-		
1,1-Dichloroethene	94		-		70-130	-		
1,2,4-Trichlorobenzene	**158**	Q	-		70-130	-		
1,2,4-Trimethylbenzene	116		-		70-130	-		
1,2-Dibromoethane	103		-		70-130	-		
1,2-Dichlorobenzene	121		-		70-130	-		
1,2-Dichloroethane	87		-		70-130	-		
1,2-Dichloropropane	79		-		70-130	-		
1,3,5-Trimethylbenzene	109		-		70-130	-		
1,3-Butadiene	100		-		70-130	-		
1,3-Dichlorobenzene	122		-		70-130	-		
1,4-Dichlorobenzene	126		-		70-130	-		
1,4-Dioxane	108		-		70-130	-		
2,2,4-Trimethylpentane	85		-		70-130	-		
2-Butanone	91		-		70-130	-		
2-Hexanone	110		-		70-130	-		
3-Chloropropene	73		-		70-130	-		
4-Ethyltoluene	110		-		70-130	-		

Lab Control Sample Analysis
Batch Quality Control

Project Name: CITY OF NEW BEDFORD
Project Number: 115058

Lab Number: L1005748
Report Date: 05/11/10

Parameter	LCS %Recovery	Qual	LCSD %Recovery	Qual	%Recovery Limits	RPD	Qual	RPD Limits
Volatile Organics in Air (Low Level) - Mansfield Lab Associated sample(s): 03-05,08,11,13-14,18 Batch: WG409613-3								
Acetone	88		-		70-130	-		
Benzene	83		-		70-130	-		
Benzyl chloride	121		-		70-130	-		
Bromodichloromethane	89		-		70-130	-		
Bromoform	117		-		70-130	-		
Bromomethane	92		-		70-130	-		
Carbon disulfide	92		-		70-130	-		
Carbon tetrachloride	98		-		70-130	-		
Chlorobenzene	106		-		70-130	-		
Chloroethane	90		-		70-130	-		
Chloroform	96		-		70-130	-		
Chloromethane	96		-		70-130	-		
cis-1,2-Dichloroethene	92		-		70-130	-		
cis-1,3-Dichloropropene	90		-		70-130	-		
Cyclohexane	83		-		70-130	-		
Dibromochloromethane	110		-		70-130	-		
Dichlorodifluoromethane	94		-		70-130	-		
Ethyl Alcohol	94		-		70-130	-		
Ethyl Acetate	96		-		70-130	-		
Ethylbenzene	101		-		70-130	-		
1,1,2-Trichloro-1,2,2-Trifluoroethane	97		-		70-130	-		

Lab Control Sample Analysis
Batch Quality Control

Project Name: CITY OF NEW BEDFORD
Project Number: 115058

Lab Number: L1005748
Report Date: 05/11/10

Parameter	LCS %Recovery	Qual	LCSD %Recovery	Qual	%Recovery Limits	RPD	Qual	RPD Limits
Volatile Organics in Air (Low Level) - Mansfield Lab Associated sample(s): 03-05,08,11,13-14,18 Batch: WG409613-3								
1,2-Dichloro-1,1,2,2-tetrafluoroethane	101		-		70-130	-		
Hexachlorobutadiene	127		-		70-130	-		
iso-Propyl Alcohol	98		-		70-130	-		
Methylene chloride	80		-		70-130	-		
4-Methyl-2-pentanone	88		-		70-130	-		
Methyl tert butyl ether	90		-		70-130	-		
p/m-Xylene	102		-		70-130	-		
o-Xylene	106		-		70-130	-		
Heptane	79		-		70-130	-		
n-Hexane	88		-		70-130	-		
Propylene	80		-		70-130	-		
Styrene	109		-		70-130	-		
Tetrachloroethene	115		-		70-130	-		
Tetrahydrofuran	99		-		70-130	-		
Toluene	102		-		70-130	-		
trans-1,2-Dichloroethene	85		-		70-130	-		
trans-1,3-Dichloropropene	81		-		70-130	-		
Trichloroethene	98		-		70-130	-		
Trichlorofluoromethane	100		-		70-130	-		
Vinyl acetate	93		-		70-130	-		
Vinyl bromide	97		-		70-130	-		

Lab Control Sample Analysis
Batch Quality Control

Project Name: CITY OF NEW BEDFORD
Project Number: 115058

Lab Number: L1005748
Report Date: 05/11/10

Parameter	LCS %Recovery	Qual	LCSD %Recovery	Qual	%Recovery Limits	RPD	Qual	RPD Limits
Volatile Organics in Air (Low Level) - Mansfield Lab Associated sample(s): 03-05,08,11,13-14,18 Batch: WG409613-3								
Vinyl chloride	97		-		70-130	-		
Naphthalene	149	Q	-		70-130	-		
Propane	72		-		70-130	-		
Acrylonitrile	80		-		70-130	-		
Acrolein	83		-		70-130	-		
1,1,1,2-Tetrachloroethane	100		-		70-130	-		
Isopropylbenzene	104		-		70-130	-		
1,2,3-Trichloropropane	95		-		70-130	-		
Acetonitrile	77		-		70-130	-		
Bromobenzene	108		-		70-130	-		
Chlorodifluoromethane	83		-		70-130	-		
Dichlorofluoromethane	88		-		70-130	-		
Dibromomethane	81		-		70-130	-		
Pentane	84		-		70-130	-		
Octane	95		-		70-130	-		
Tertiary-Amyl Methyl Ether	84		-		70-130	-		
o-Chlorotoluene	103		-		70-130	-		
p-Chlorotoluene	104		-		70-130	-		
2,2-Dichloropropane	82		-		70-130	-		
1,1-Dichloropropene	86		-		70-130	-		
Isopropyl Ether	83		-		70-130	-		

Lab Control Sample Analysis
Batch Quality Control

Project Name: CITY OF NEW BEDFORD
Project Number: 115058

Lab Number: L1005748
Report Date: 05/11/10

Parameter	LCS %Recovery	Qual	LCSD %Recovery	Qual	%Recovery Limits	RPD	Qual	RPD Limits
Volatile Organics in Air (Low Level) - Mansfield Lab Associated sample(s): 03-05,08,11,13-14,18 Batch: WG409613-3								
Ethyl-Tert-Butyl-Ether	84		-		70-130	-		
1,2,3-Trichlorobenzene	**156**	Q	-		70-130	-		
Ethyl ether	78		-		70-130	-		
n-Butylbenzene	110		-		70-130	-		
sec-Butylbenzene	106		-		70-130	-		
tert-Butylbenzene	108		-		70-130	-		
1,2-Dibromo-3-chloropropane	111		-		70-130	-		
p-Isopropyltoluene	102		-		70-130	-		
n-Propylbenzene	105		-		70-130	-		
1,3-Dichloropropane	90		-		70-130	-		
Methanol	74		-		70-130	-		
Butane	94		-		70-130	-		
Nonane (C9)	84		-		70-130	-		
Decane (C10)	88		-		70-130	-		
Undecane	112		-		70-130	-		
Dodecane (C12)	**156**	Q	-		70-130	-		
Butyl Acetate	110		-		70-130	-		
2,4,4-Trimethyl-2-Pentene	123		-		70-130	-		
2,4,4-Trimethyl-1-Pentene	**245**	Q	-		70-130	-		
tert-Butyl Alcohol	104		-		70-130	-		

Lab Control Sample Analysis
Batch Quality Control

Project Name: CITY OF NEW BEDFORD
Project Number: 115058
Lab Number: L1005748
Report Date: 05/11/10

Parameter	LCS %Recovery	Qual	LCSD %Recovery	Qual	%Recovery Limits	RPD	Qual	RPD Limits
Volatile Organics in Air (Low Level) - Mansfield Lab Associated sample(s): 06-07,09,12,15-16,20 Batch: WG409614-3								
1,1,1-Trichloroethane	86		-		70-130	-		
1,1,2,2-Tetrachloroethane	89		-		70-130	-		
1,1,2-Trichloroethane	78		-		70-130	-		
1,1-Dichloroethane	90		-		70-130	-		
1,1-Dichloroethene	96		-		70-130	-		
1,2,4-Trichlorobenzene	120		-		70-130	-		
1,2,4-Trimethylbenzene	107		-		70-130	-		
1,2-Dibromoethane	86		-		70-130	-		
1,2-Dichlorobenzene	102		-		70-130	-		
1,2-Dichloroethane	99		-		70-130	-		
1,2-Dichloropropane	**69**	Q	-		70-130	-		
1,3,5-Trimethylbenzene	102		-		70-130	-		
1,3-Butadiene	91		-		70-130	-		
1,3-Dichlorobenzene	101		-		70-130	-		
1,4-Dichlorobenzene	102		-		70-130	-		
1,4-Dioxane	83		-		70-130	-		
2,2,4-Trimethylpentane	71		-		70-130	-		
2-Butanone	94		-		70-130	-		
2-Hexanone	105		-		70-130	-		
3-Chloropropene	89		-		70-130	-		
4-Ethyltoluene	102		-		70-130	-		

Lab Control Sample Analysis
Batch Quality Control

Project Name: CITY OF NEW BEDFORD
Project Number: 115058

Lab Number: L1005748
Report Date: 05/11/10

Parameter	LCS %Recovery	Qual	LCSD %Recovery	Qual	%Recovery Limits	RPD	Qual	RPD Limits
Volatile Organics in Air (Low Level) - Mansfield Lab Associated sample(s): 06-07,09,12,15-16,20 Batch: WG409614-3								
Acetone	104		-		70-130	-		
Benzene	75		-		70-130	-		
Benzyl chloride	94		-		70-130	-		
Bromodichloromethane	80		-		70-130	-		
Bromoform	97		-		70-130	-		
Bromomethane	95		-		70-130	-		
Carbon disulfide	89		-		70-130	-		
Carbon tetrachloride	85		-		70-130	-		
Chlorobenzene	86		-		70-130	-		
Chloroethane	88		-		70-130	-		
Chloroform	102		-		70-130	-		
Chloromethane	81		-		70-130	-		
cis-1,2-Dichloroethene	93		-		70-130	-		
cis-1,3-Dichloropropene	78		-		70-130	-		
Cyclohexane	69	Q	-		70-130	-		
Dibromochloromethane	91		-		70-130	-		
Dichlorodifluoromethane	98		-		70-130	-		
Ethyl Alcohol	89		-		70-130	-		
Ethyl Acetate	90		-		70-130	-		
Ethylbenzene	88		-		70-130	-		
1,1,2-Trichloro-1,2,2-Trifluoroethane	104		-		70-130	-		

Lab Control Sample Analysis
Batch Quality Control

Project Name: CITY OF NEW BEDFORD
Project Number: 115058

Lab Number: L1005748
Report Date: 05/11/10

Parameter	LCS %Recovery	Qual	LCSD %Recovery	Qual	%Recovery Limits	RPD	Qual	RPD Limits
Volatile Organics in Air (Low Level) - Mansfield Lab Associated sample(s): 06-07,09,12,15-16,20 Batch: WG409614-3								
1,2-Dichloro-1,1,2,2-tetrafluoroethane	100		-		70-130	-		
Hexachlorobutadiene	119		-		70-130	-		
iso-Propyl Alcohol	92		-		70-130	-		
Methylene chloride	82		-		70-130	-		
4-Methyl-2-pentanone	76		-		70-130	-		
Methyl tert butyl ether	107		-		70-130	-		
p/m-Xylene	92		-		70-130	-		
o-Xylene	94		-		70-130	-		
Heptane	**68**	Q	-		70-130	-		
n-Hexane	**68**	Q	-		70-130	-		
Propylene	72		-		70-130	-		
Styrene	96		-		70-130	-		
Tetrachloroethene	96		-		70-130	-		
Tetrahydrofuran	94		-		70-130	-		
Toluene	81		-		70-130	-		
trans-1,2-Dichloroethene	86		-		70-130	-		
trans-1,3-Dichloropropene	**68**	Q	-		70-130	-		
Trichloroethene	86		-		70-130	-		
Trichlorofluoromethane	108		-		70-130	-		
Vinyl acetate	99		-		70-130	-		
Vinyl bromide	102		-		70-130	-		

Lab Control Sample Analysis
Batch Quality Control

Project Name: CITY OF NEW BEDFORD
Project Number: 115058
Lab Number: L1005748
Report Date: 05/11/10

Parameter	LCS %Recovery	Qual	LCSD %Recovery	Qual	%Recovery Limits	RPD	Qual	RPD Limits
Volatile Organics in Air (Low Level) - Mansfield Lab Associated sample(s): 06-07,09,12,15-16,20 Batch: WG409614-3								
Vinyl chloride	89		-		70-130	-		
Naphthalene	107		-		70-130	-		
Propane	65	Q	-		70-130	-		
Acrylonitrile	92		-		70-130	-		
Acrolein	96		-		70-130	-		
1,1,1,2-Tetrachloroethane	90		-		70-130	-		
Isopropylbenzene	97		-		70-130	-		
1,2,3-Trichloropropane	87		-		70-130	-		
Acetonitrile	86		-		70-130	-		
Bromobenzene	84		-		70-130	-		
Chlorodifluoromethane	78		-		70-130	-		
Dichlorofluoromethane	91		-		70-130	-		
Dibromomethane	77		-		70-130	-		
Pentane	81		-		70-130	-		
Octane	81		-		70-130	-		
Tertiary-Amyl Methyl Ether	84		-		70-130	-		
o-Chlorotoluene	94		-		70-130	-		
p-Chlorotoluene	91		-		70-130	-		
2,2-Dichloropropane	97		-		70-130	-		
1,1-Dichloropropene	79		-		70-130	-		
Isopropyl Ether	78		-		70-130	-		

Lab Control Sample Analysis
Batch Quality Control

Project Name: CITY OF NEW BEDFORD
Project Number: 115058

Lab Number: L1005748
Report Date: 05/11/10

Parameter	LCS %Recovery	Qual	LCSD %Recovery	Qual	%Recovery Limits	RPD	Qual	RPD Limits
Volatile Organics in Air (Low Level) - Mansfield Lab Associated sample(s): 06-07,09,12,15-16,20 Batch: WG409614-3								
Ethyl-Tert-Butyl-Ether	80		-		70-130	-		
1,2,3-Trichlorobenzene	115		-		70-130	-		
Ethyl ether	86		-		70-130	-		
n-Butylbenzene	103		-		70-130	-		
sec-Butylbenzene	101		-		70-130	-		
tert-Butylbenzene	104		-		70-130	-		
1,2-Dibromo-3-chloropropane	99		-		70-130	-		
p-Isopropyltoluene	101		-		70-130	-		
n-Propylbenzene	100		-		70-130	-		
1,3-Dichloropropane	78		-		70-130	-		
Methanol	91		-		70-130	-		
Butane	84		-		70-130	-		
Nonane (C9)	76		-		70-130	-		
Decane (C10)	84		-		70-130	-		
Undecane	92		-		70-130	-		
Dodecane (C12)	102		-		70-130	-		
Butyl Acetate	89		-		70-130	-		
2,4,4-Trimethyl-2-Pentene	89		-		70-130	-		
2,4,4-Trimethyl-1-Pentene	91		-		70-130	-		
tert-Butyl Alcohol	100		-		70-130	-		

Lab Control Sample Analysis
Batch Quality Control

Project Name: CITY OF NEW BEDFORD
Project Number: 115058

Lab Number: L1005748
Report Date: 05/11/10

Parameter	LCS %Recovery	Qual	LCSD %Recovery	Qual	%Recovery Limits	RPD	Qual	RPD Limits
Volatile Organics in Air (Low Level) - Mansfield Lab Associated sample(s): 01,20 Batch: WG409614-8								
1,1,1-Trichloroethane	76		-		70-130	-		
1,1,2,2-Tetrachloroethane	91		-		70-130	-		
1,1,2-Trichloroethane	76		-		70-130	-		
1,1-Dichloroethane	83		-		70-130	-		
1,1-Dichloroethene	97		-		70-130	-		
1,2,4-Trichlorobenzene	130		-		70-130	-		
1,2,4-Trimethylbenzene	112		-		70-130	-		
1,2-Dibromoethane	88		-		70-130	-		
1,2-Dichlorobenzene	107		-		70-130	-		
1,2-Dichloroethane	97		-		70-130	-		
1,2-Dichloropropane	**65**	Q	-		70-130	-		
1,3,5-Trimethylbenzene	107		-		70-130	-		
1,3-Butadiene	91		-		70-130	-		
1,3-Dichlorobenzene	105		-		70-130	-		
1,4-Dichlorobenzene	105		-		70-130	-		
1,4-Dioxane	81		-		70-130	-		
2,2,4-Trimethylpentane	**65**	Q	-		70-130	-		
2-Butanone	101		-		70-130	-		
2-Hexanone	89		-		70-130	-		
3-Chloropropene	91		-		70-130	-		
4-Ethyltoluene	106		-		70-130	-		

Lab Control Sample Analysis
Batch Quality Control

Project Name: CITY OF NEW BEDFORD
Project Number: 115058
Lab Number: L1005748
Report Date: 05/11/10

Parameter	LCS %Recovery	Qual	LCSD %Recovery	Qual	%Recovery Limits	RPD	Qual	RPD Limits
Volatile Organics in Air (Low Level) - Mansfield Lab Associated sample(s): 01,20 Batch: WG409614-8								
Acetone	114		-		70-130	-		
Benzene	66	Q	-		70-130	-		
Benzyl chloride	101		-		70-130	-		
Bromodichloromethane	73		-		70-130	-		
Bromoform	100		-		70-130	-		
Bromomethane	96		-		70-130	-		
Carbon disulfide	101		-		70-130	-		
Carbon tetrachloride	80		-		70-130	-		
Chlorobenzene	88		-		70-130	-		
Chloroethane	88		-		70-130	-		
Chloroform	96		-		70-130	-		
Chloromethane	79		-		70-130	-		
cis-1,2-Dichloroethene	88		-		70-130	-		
cis-1,3-Dichloropropene	76		-		70-130	-		
Cyclohexane	65	Q	-		70-130	-		
Dibromochloromethane	90		-		70-130	-		
Dichlorodifluoromethane	97		-		70-130	-		
Ethyl Alcohol	96		-		70-130	-		
Ethyl Acetate	91		-		70-130	-		
Ethylbenzene	94		-		70-130	-		
1,1,2-Trichloro-1,2,2-Trifluoroethane	119		-		70-130	-		

Lab Control Sample Analysis
Batch Quality Control

Project Name: CITY OF NEW BEDFORD
Project Number: 115058

Lab Number: L1005748
Report Date: 05/11/10

Parameter	LCS %Recovery	Qual	LCSD %Recovery	Qual	%Recovery Limits	RPD	Qual	RPD Limits
Volatile Organics in Air (Low Level) - Mansfield Lab Associated sample(s): 01,20 Batch: WG409614-8								
1,2-Dichloro-1,1,2,2-tetrafluoroethane	100		-		70-130	-		
Hexachlorobutadiene	124		-		70-130	-		
iso-Propyl Alcohol	98		-		70-130	-		
Methylene chloride	84		-		70-130	-		
4-Methyl-2-pentanone	79		-		70-130	-		
Methyl tert butyl ether	118		-		70-130	-		
p/m-Xylene	96		-		70-130	-		
o-Xylene	99		-		70-130	-		
Heptane	**62**	Q	-		70-130	-		
n-Hexane	**64**	Q	-		70-130	-		
Propylene	74		-		70-130	-		
Styrene	101		-		70-130	-		
Tetrachloroethene	90		-		70-130	-		
Tetrahydrofuran	108		-		70-130	-		
Toluene	83		-		70-130	-		
trans-1,2-Dichloroethene	92		-		70-130	-		
trans-1,3-Dichloropropene	**69**	Q	-		70-130	-		
Trichloroethene	75		-		70-130	-		
Trichlorofluoromethane	108		-		70-130	-		
Vinyl acetate	109		-		70-130	-		
Vinyl bromide	102		-		70-130	-		

Lab Control Sample Analysis
Batch Quality Control

Project Name: CITY OF NEW BEDFORD
Project Number: 115058

Lab Number: L1005748
Report Date: 05/11/10

Parameter	LCS %Recovery	Qual	LCSD %Recovery	Qual	%Recovery Limits	RPD	Qual	RPD Limits
Volatile Organics in Air (Low Level) - Mansfield Lab Associated sample(s): 01,20 Batch: WG409614-8								
Vinyl chloride	90		-		70-130	-		
Naphthalene	116		-		70-130	-		
Propane	62	Q	-		70-130	-		
Acrylonitrile	99		-		70-130	-		
Acrolein	105		-		70-130	-		
1,1,1,2-Tetrachloroethane	90		-		70-130	-		
Isopropylbenzene	103		-		70-130	-		
1,2,3-Trichloropropane	91		-		70-130	-		
Acetonitrile	96		-		70-130	-		
Bromobenzene	88		-		70-130	-		
Chlorodifluoromethane	78		-		70-130	-		
Dichlorofluoromethane	93		-		70-130	-		
Dibromomethane	68	Q	-		70-130	-		
Pentane	85		-		70-130	-		
Octane	83		-		70-130	-		
Tertiary-Amyl Methyl Ether	85		-		70-130	-		
o-Chlorotoluene	100		-		70-130	-		
p-Chlorotoluene	94		-		70-130	-		
2,2-Dichloropropane	91		-		70-130	-		
1,1-Dichloropropene	70		-		70-130	-		
Isopropyl Ether	78		-		70-130	-		

Lab Control Sample Analysis
Batch Quality Control

Project Name: CITY OF NEW BEDFORD
Project Number: 115058

Lab Number: L1005748
Report Date: 05/11/10

Parameter	LCS %Recovery	Qual	LCSD %Recovery	Qual	%Recovery Limits	RPD	Qual	RPD Limits
Volatile Organics in Air (Low Level) - Mansfield Lab Associated sample(s): 01,20 Batch: WG409614-8								
Ethyl-Tert-Butyl-Ether	82		-		70-130	-		
1,2,3-Trichlorobenzene	124		-		70-130	-		
Ethyl ether	97		-		70-130	-		
n-Butylbenzene	110		-		70-130	-		
sec-Butylbenzene	105		-		70-130	-		
tert-Butylbenzene	109		-		70-130	-		
1,2-Dibromo-3-chloropropane	104		-		70-130	-		
p-Isopropyltoluene	106		-		70-130	-		
n-Propylbenzene	106		-		70-130	-		
1,3-Dichloropropane	79		-		70-130	-		
Methanol	108		-		70-130	-		
Butane	85		-		70-130	-		
Nonane (C9)	80		-		70-130	-		
Decane (C10)	89		-		70-130	-		
Undecane	100		-		70-130	-		
Dodecane (C12)	114		-		70-130	-		
Butyl Acetate	95		-		70-130	-		
2,4,4-Trimethyl-2-Pentene	83		-		70-130	-		
2,4,4-Trimethyl-1-Pentene	85		-		70-130	-		
tert-Butyl Alcohol	106		-		70-130	-		

Lab Control Sample Analysis
Batch Quality Control

Project Name: CITY OF NEW BEDFORD
Project Number: 115058
Lab Number: L1005748
Report Date: 05/11/10

Parameter	LCS %Recovery	Qual	LCSD %Recovery	Qual	%Recovery Limits	RPD	Qual	RPD Limits
Volatile Organics in Air (Low Level) - Mansfield Lab Associated sample(s): 02,10,17,19 Batch: WG410010-3								
Chlorodifluoromethane	76		-		70-130	-		
Propylene	75		-		70-130	-		
Propane	69	Q	-		70-130	-		
Dichlorodifluoromethane	89		-		70-130	-		
Chloromethane	89		-		70-130	-		
1,2-Dichloro-1,1,2,2-tetrafluoroethane	94		-		70-130	-		
Methanol	78		-		70-130	-		
Vinyl chloride	90		-		70-130	-		
1,3-Butadiene	93		-		70-130	-		
Butane	81		-		70-130	-		
Bromomethane	85		-		70-130	-		
Chloroethane	84		-		70-130	-		
Ethyl Alcohol	81		-		70-130	-		
Dichlorofluoromethane	83		-		70-130	-		
Vinyl bromide	90		-		70-130	-		
Acrolein	74		-		70-130	-		
Acetone	81		-		70-130	-		
Acetonitrile	71		-		70-130	-		
Trichlorofluoromethane	96		-		70-130	-		
iso-Propyl Alcohol	85		-		70-130	-		
Acrylonitrile	74		-		70-130	-		

Lab Control Sample Analysis
Batch Quality Control

Project Name: CITY OF NEW BEDFORD
Project Number: 115058

Lab Number: L1005748
Report Date: 05/11/10

Parameter	LCS %Recovery	Qual	LCSD %Recovery	Qual	%Recovery Limits	RPD	Qual	RPD Limits
Volatile Organics in Air (Low Level) - Mansfield Lab Associated sample(s): 02,10,17,19 Batch: WG410010-3								
Pentane	85		-		70-130	-		
Ethyl ether	70		-		70-130	-		
1,1-Dichloroethene	89		-		70-130	-		
tert-Butyl Alcohol	92		-		70-130	-		
Methylene chloride	78		-		70-130	-		
3-Chloropropene	64	Q	-		70-130	-		
Carbon disulfide	82		-		70-130	-		
1,1,2-Trichloro-1,2,2-Trifluoroethane	93		-		70-130	-		
trans-1,2-Dichloroethene	82		-		70-130	-		
1,1-Dichloroethane	86		-		70-130	-		
Methyl tert butyl ether	85		-		70-130	-		
Vinyl acetate	93		-		70-130	-		
2-Butanone	85		-		70-130	-		
cis-1,2-Dichloroethene	97		-		70-130	-		
Ethyl Acetate	90		-		70-130	-		
Chloroform	104		-		70-130	-		
Tetrahydrofuran	96		-		70-130	-		
2,2-Dichloropropane	93		-		70-130	-		
1,2-Dichloroethane	103		-		70-130	-		
n-Hexane	103		-		70-130	-		
Isopropyl Ether	93		-		70-130	-		

Lab Control Sample Analysis
Batch Quality Control

Project Name: CITY OF NEW BEDFORD
Project Number: 115058

Lab Number: L1005748
Report Date: 05/11/10

Parameter	LCS %Recovery	Qual	LCSD %Recovery	Qual	%Recovery Limits	RPD	Qual	RPD Limits
Volatile Organics in Air (Low Level) - Mansfield Lab Associated sample(s): 02,10,17,19 Batch: WG410010-3								
Ethyl-Tert-Butyl-Ether	94		-		70-130	-		
1,1,1-Trichloroethane	114		-		70-130	-		
1,1-Dichloropropene	88		-		70-130	-		
Benzene	89		-		70-130	-		
Carbon tetrachloride	106		-		70-130	-		
Cyclohexane	86		-		70-130	-		
Tertiary-Amyl Methyl Ether	77		-		70-130	-		
Dibromomethane	88		-		70-130	-		
1,2-Dichloropropane	88		-		70-130	-		
Bromodichloromethane	96		-		70-130	-		
1,4-Dioxane	101		-		70-130	-		
Trichloroethene	100		-		70-130	-		
2,2,4-Trimethylpentane	89		-		70-130	-		
Heptane	88		-		70-130	-		
2,4,4-Trimethyl-1-Pentene	**138**	Q	-		70-130	-		
cis-1,3-Dichloropropene	97		-		70-130	-		
4-Methyl-2-pentanone	89		-		70-130	-		
2,4,4-Trimethyl-2-Pentene	115		-		70-130	-		
trans-1,3-Dichloropropene	86		-		70-130	-		
1,1,2-Trichloroethane	99		-		70-130	-		
Toluene	96		-		70-130	-		

Lab Control Sample Analysis
Batch Quality Control

Project Name: CITY OF NEW BEDFORD
Project Number: 115058

Lab Number: L1005748
Report Date: 05/11/10

Parameter	LCS %Recovery	Qual	LCSD %Recovery	Qual	%Recovery Limits	RPD	Qual	RPD Limits
Volatile Organics in Air (Low Level) - Mansfield Lab Associated sample(s): 02,10,17,19 Batch: WG410010-3								
1,3-Dichloropropane	89		-		70-130	-		
2-Hexanone	103		-		70-130	-		
Dibromochloromethane	106		-		70-130	-		
1,2-Dibromoethane	102		-		70-130	-		
Butyl Acetate	98		-		70-130	-		
Octane	92		-		70-130	-		
Tetrachloroethene	108		-		70-130	-		
1,1,1,2-Tetrachloroethane	99		-		70-130	-		
Chlorobenzene	105		-		70-130	-		
Ethylbenzene	97		-		70-130	-		
p/m-Xylene	98		-		70-130	-		
Bromoform	111		-		70-130	-		
Styrene	102		-		70-130	-		
1,1,2,2-Tetrachloroethane	98		-		70-130	-		
o-Xylene	101		-		70-130	-		
1,2,3-Trichloropropane	89		-		70-130	-		
Nonane (C9)	89		-		70-130	-		
Isopropylbenzene	97		-		70-130	-		
Bromobenzene	101		-		70-130	-		
o-Chlorotoluene	100		-		70-130	-		
n-Propylbenzene	96		-		70-130	-		

Lab Control Sample Analysis
Batch Quality Control

Project Name: CITY OF NEW BEDFORD
Project Number: 115058

Lab Number: L1005748
Report Date: 05/11/10

Parameter	LCS %Recovery	Qual	LCSD %Recovery	Qual	%Recovery Limits	RPD	Qual	RPD Limits
Volatile Organics in Air (Low Level) - Mansfield Lab Associated sample(s): 02,10,17,19 Batch: WG410010-3								
p-Chlorotoluene	100		-		70-130	-		
4-Ethyltoluene	98		-		70-130	-		
1,3,5-Trimethylbenzene	98		-		70-130	-		
tert-Butylbenzene	96		-		70-130	-		
1,2,4-Trimethylbenzene	103		-		70-130	-		
Decane (C10)	89		-		70-130	-		
Benzyl chloride	104		-		70-130	-		
1,3-Dichlorobenzene	118		-		70-130	-		
1,4-Dichlorobenzene	120		-		70-130	-		
sec-Butylbenzene	96		-		70-130	-		
p-Isopropyltoluene	91		-		70-130	-		
1,2-Dichlorobenzene	113		-		70-130	-		
n-Butylbenzene	101		-		70-130	-		
1,2-Dibromo-3-chloropropane	115		-		70-130	-		
Undecane	106		-		70-130	-		
Dodecane (C12)	**138**	Q	-		70-130	-		
1,2,4-Trichlorobenzene	**140**	Q	-		70-130	-		
Naphthalene	127		-		70-130	-		
1,2,3-Trichlorobenzene	**133**	Q	-		70-130	-		
Hexachlorobutadiene	121		-		70-130	-		

Lab Control Sample Analysis
Batch Quality Control

Project Name: CITY OF NEW BEDFORD
Project Number: 115058

Lab Number: L1005748
Report Date: 05/11/10

Parameter	LCS %Recovery	Qual	LCSD %Recovery	Qual	%Recovery Limits	RPD	Qual	RPD Limits
Volatile Organics in Air by SIM - Mansfield Lab Associated sample(s): 02,10,17,19 Batch: WG410013-3								
Dichlorodifluoromethane	88		-		70-130	-		25
Chloromethane	85		-		70-130	-		25
1,2-Dichloro-1,1,2,2-tetrafluoroethane	93		-		70-130	-		25
Vinyl chloride	94		-		70-130	-		25
1,3-Butadiene	97		-		70-130	-		25
Bromomethane	87		-		70-130	-		25
Chloroethane	83		-		70-130	-		25
Acetone	79		-		70-130	-		25
Trichlorofluoromethane	94		-		70-130	-		25
Acrylonitrile	72		-		70-130	-		25
1,1-Dichloroethene	88		-		70-130	-		25
Methylene chloride	82		-		70-130	-		25
1,1,2-Trichloro-1,2,2-Trifluoroethane	91		-		70-130	-		25
Halothane	95		-		70-130	-		25
trans-1,2-Dichloroethene	84		-		70-130	-		25
1,1-Dichloroethane	87		-		70-130	-		25
Methyl tert butyl ether	74		-		70-130	-		25
2-Butanone	71		-		70-130	-		25
cis-1,2-Dichloroethene	98		-		70-130	-		25
Chloroform	104		-		70-130	-		25
1,2-Dichloroethane	87		-		70-130	-		25

Lab Control Sample Analysis
Batch Quality Control

Project Name: CITY OF NEW BEDFORD
Project Number: 115058

Lab Number: L1005748
Report Date: 05/11/10

Parameter	LCS %Recovery	Qual	LCSD %Recovery	Qual	%Recovery Limits	RPD	Qual	RPD Limits
Volatile Organics in Air by SIM - Mansfield Lab Associated sample(s): 02,10,17,19 Batch: WG410013-3								
1,1,1-Trichloroethane	103		-		70-130	-		25
Benzene	87		-		70-130	-		25
Carbon tetrachloride	110		-		70-130	-		25
1,2-Dichloropropane	87		-		70-130	-		25
Bromodichloromethane	96		-		70-130	-		25
Trichloroethene	101		-		70-130	-		25
1,4-Dioxane	82		-		70-130	-		25
cis-1,3-Dichloropropene	99		-		70-130	-		25
4-Methyl-2-pentanone	79		-		70-130	-		25
trans-1,3-Dichloropropene	85		-		70-130	-		25
1,1,2-Trichloroethane	96		-		70-130	-		25
Toluene	90		-		70-130	-		25
Dibromochloromethane	106		-		70-130	-		25
1,2-Dibromoethane	104		-		70-130	-		25
Tetrachloroethene	108		-		70-130	-		25
1,1,1,2-Tetrachloroethane	97		-		70-130	-		25
Chlorobenzene	104		-		70-130	-		25
Ethylbenzene	93		-		70-130	-		25
p/m-Xylene	95		-		70-130	-		25
Bromoform	114		-		70-130	-		25
Styrene	105		-		70-130	-		25

Lab Control Sample Analysis
Batch Quality Control

Project Name: CITY OF NEW BEDFORD
Project Number: 115058

Lab Number: L1005748
Report Date: 05/11/10

Parameter	LCS %Recovery	Qual	LCSD %Recovery	Qual	%Recovery Limits	RPD	Qual	RPD Limits
Volatile Organics in Air by SIM - Mansfield Lab Associated sample(s): 02,10,17,19 Batch: WG410013-3								
1,1,2,2-Tetrachloroethane	90		-		70-130	-		25
o-Xylene	96		-		70-130	-		25
Isopropylbenzene	92		-		70-130	-		25
1,3,5-Trimethylbenzene	100		-		70-130	-		25
1,2,4-Trimethylbenzene	101		-		70-130	-		25
1,3-Dichlorobenzene	119		-		70-130	-		25
1,4-Dichlorobenzene	120		-		70-130	-		25
sec-Butylbenzene	93		-		70-130	-		25
p-Isopropyltoluene	88		-		70-130	-		25
1,2-Dichlorobenzene	115		-		70-130	-		25
n-Butylbenzene	99		-		70-130	-		25
1,2,4-Trichlorobenzene	**132**	Q	-		70-130	-		25
Naphthalene	114		-		70-130	-		25
1,2,3-Trichlorobenzene	127		-		70-130	-		25
Hexachlorobutadiene	126		-		70-130	-		25

Lab Duplicate Analysis
Batch Quality Control

Project Name: CITY OF NEW BEDFORD
Project Number: 115058

Lab Number: L1005748
Report Date: 05/11/10

Parameter	Native Sample	Duplicate Sample	Units	RPD	Qual	RPD Limits
Volatile Organics in Air by SIM - Mansfield Lab Associated sample(s): 03-05,08,11,13-14,18 QC Batch ID: WG409612-5 QC Sample: L1005748-05 Client ID: TRC-IA-5						
Vinyl chloride	ND	ND	ppbV	NC		25
trans-1,2-Dichloroethene	ND	ND	ppbV	NC		25
cis-1,2-Dichloroethene	ND	ND	ppbV	NC		25
Chloroform	ND	ND	ppbV	NC		25
1,2-Dichloroethane	ND	ND	ppbV	NC		25
Benzene	0.108	0.109	ppbV	1		25
Carbon tetrachloride	0.090	0.090	ppbV	0		25
1,2-Dichloropropane	ND	ND	ppbV	NC		25
Bromodichloromethane	ND	ND	ppbV	NC		25
Trichloroethene	ND	ND	ppbV	NC		25
1,4-Dioxane	ND	ND	ppbV	NC		25
cis-1,3-Dichloropropene	ND	ND	ppbV	NC		25
trans-1,3-Dichloropropene	ND	ND	ppbV	NC		25
1,1,2-Trichloroethane	ND	ND	ppbV	NC		25
Dibromochloromethane	ND	ND	ppbV	NC		25
1,2-Dibromoethane	ND	ND	ppbV	NC		25
Tetrachloroethene	ND	ND	ppbV	NC		25
1,1,2,2-Tetrachloroethane	ND	ND	ppbV	NC		25
1,4-Dichlorobenzene	ND	ND	ppbV	NC		25

Lab Duplicate Analysis
Batch Quality Control

Project Name: CITY OF NEW BEDFORD
Project Number: 115058

Lab Number: L1005748
Report Date: 05/11/10

Parameter	Native Sample	Duplicate Sample	Units	RPD	RPD Limits
Volatile Organics in Air by SIM - Mansfield Lab Associated sample(s): 03-05,08,11,13-14,18 QC Batch ID: WG409612-5 QC Sample: L1005748-05 Client ID: TRC-IA-5					
Naphthalene	ND	ND	ppbV	NC	25
Hexachlorobutadiene	ND	ND	ppbV	NC	25

Lab Duplicate Analysis
Batch Quality Control

Project Name: CITY OF NEW BEDFORD
Project Number: 115058

Lab Number: L1005748
Report Date: 05/11/10

Parameter	Native Sample	Duplicate Sample	Units	RPD	RPD Limits
Volatile Organics in Air (Low Level) - Mansfield Lab Associated sample(s): 03-05,08,11,13-14,18 QC Batch ID: WG409613-5 QC Sample: L1005748-05 Client ID: TRC-IA-5					
1,1,1-Trichloroethane	ND	ND	ppbV	NC	25
1,1,2,2-Tetrachloroethane	ND	ND	ppbV	NC	25
1,1,2-Trichloroethane	ND	ND	ppbV	NC	25
1,1-Dichloroethane	ND	ND	ppbV	NC	25
1,1-Dichloroethene	ND	ND	ppbV	NC	25
1,2,4-Trichlorobenzene	ND	ND	ppbV	NC	25
1,2,4-Trimethylbenzene	ND	ND	ppbV	NC	25
1,2-Dibromoethane	ND	ND	ppbV	NC	25
1,2-Dichlorobenzene	ND	ND	ppbV	NC	25
1,2-Dichloroethane	ND	ND	ppbV	NC	25
1,2-Dichloropropane	ND	ND	ppbV	NC	25
1,3,5-Trimethybenzene	ND	ND	ppbV	NC	25
1,3-Dichlorobenzene	ND	ND	ppbV	NC	25
1,4-Dichlorobenzene	ND	ND	ppbV	NC	25
1,4-Dioxane	ND	ND	ppbV	NC	25
2-Butanone	ND	ND	ppbV	NC	25
2-Hexanone	ND	ND	ppbV	NC	25
Acetone	2.04	2.05	ppbV	0	25
Benzene	ND	ND	ppbV	NC	25

Lab Duplicate Analysis
Batch Quality Control

Project Name: CITY OF NEW BEDFORD
Project Number: 115058

Lab Number: L1005748
Report Date: 05/11/10

Parameter	Native Sample	Duplicate Sample	Units	RPD	RPD Limits
Volatile Organics in Air (Low Level) - Mansfield Lab Associated sample(s): 03-05,08,11,13-14,18 QC Batch ID: WG409613-5 QC Sample: L1005748-05 Client ID: TRC-IA-5					
Bromodichloromethane	ND	ND	ppbV	NC	25
Bromoform	ND	ND	ppbV	NC	25
Bromomethane	ND	ND	ppbV	NC	25
Carbon disulfide	ND	ND	ppbV	NC	25
Carbon tetrachloride	ND	ND	ppbV	NC	25
Chlorobenzene	ND	ND	ppbV	NC	25
Chloroethane	ND	ND	ppbV	NC	25
Chloroform	ND	ND	ppbV	NC	25
Chloromethane	0.624	0.606	ppbV	3	25
cis-1,2-Dichloroethene	ND	ND	ppbV	NC	25
cis-1,3-Dichloropropene	ND	ND	ppbV	NC	25
Dibromochloromethane	ND	ND	ppbV	NC	25
Dichlorodifluoromethane	0.517	0.518	ppbV	0	25
Ethylbenzene	ND	ND	ppbV	NC	25
Hexachlorobutadiene	ND	ND	ppbV	NC	25
Methylene chloride	ND	ND	ppbV	NC	25
4-Methyl-2-pentanone	ND	ND	ppbV	NC	25
Methyl tert butyl ether	ND	ND	ppbV	NC	25
p/m-Xylene	ND	ND	ppbV	NC	25

Lab Duplicate Analysis
Batch Quality Control

Project Name: CITY OF NEW BEDFORD
Project Number: 115058

Lab Number: L1005748
Report Date: 05/11/10

Parameter	Native Sample	Duplicate Sample	Units	RPD	RPD Limits
Volatile Organics in Air (Low Level) - Mansfield Lab Associated sample(s): 03-05,08,11,13-14,18 QC Batch ID: WG409613-5 QC Sample: L1005748-05 Client ID: TRC-IA-5					
o-Xylene	ND	ND	ppbV	NC	25
Styrene	ND	ND	ppbV	NC	25
Tetrachloroethene	ND	ND	ppbV	NC	25
Tetrahydrofuran	ND	ND	ppbV	NC	25
Toluene	ND	ND	ppbV	NC	25
trans-1,2-Dichloroethene	ND	ND	ppbV	NC	25
trans-1,3-Dichloropropene	ND	ND	ppbV	NC	25
Trichloroethene	ND	ND	ppbV	NC	25
Trichlorofluoromethane	0.244	0.243	ppbV	0	25
Vinyl chloride	ND	ND	ppbV	NC	25
Naphthalene	ND	ND	ppbV	NC	25
1,1,1,2-Tetrachloroethane	ND	ND	ppbV	NC	25
Isopropylbenzene	ND	ND	ppbV	NC	25
1,2,3-Trichloropropane	ND	ND	ppbV	NC	25
Bromobenzene	ND	ND	ppbV	NC	25
Dibromomethane	ND	ND	ppbV	NC	25
tert-Amyl Methyl Ether	ND	ND	ppbV	NC	25
2-Chlorotoluene	ND	ND	ppbV	NC	25
4-Chlorotoluene	ND	ND	ppbV	NC	25

Lab Duplicate Analysis
Batch Quality Control

Project Name: CITY OF NEW BEDFORD
Project Number: 115058

Lab Number: L1005748
Report Date: 05/11/10

Parameter	Native Sample	Duplicate Sample	Units	RPD	RPD Limits
Volatile Organics in Air (Low Level) - Mansfield Lab Associated sample(s): 03-05,08,11,13-14,18 QC Batch ID: WG409613-5 QC Sample: L1005748-05 Client ID: TRC-IA-5					
2,2-Dichloropropane	ND	ND	ppbV	NC	25
1,1-Dichloropropene	ND	ND	ppbV	NC	25
Diisopropyl ether	ND	ND	ppbV	NC	25
tert-Butyl Ethyl Ether	ND	ND	ppbV	NC	25
1,2,3-Trichlorobenzene	ND	ND	ppbV	NC	25
Ethyl ether	ND	ND	ppbV	NC	25
n-Butylbenzene	ND	ND	ppbV	NC	25
sec-Butylbenzene	ND	ND	ppbV	NC	25
tert-Butylbenzene	ND	ND	ppbV	NC	25
1,2-Dibromo-3-chloropropane	ND	ND	ppbV	NC	25
p-Isopropyltoluene	ND	ND	ppbV	NC	25
n-Propylbenzene	ND	ND	ppbV	NC	25
1,3-Dichloropropane	ND	ND	ppbV	NC	25

Lab Duplicate Analysis
Batch Quality Control

Project Name: CITY OF NEW BEDFORD
Project Number: 115058

Lab Number: L1005748
Report Date: 05/11/10

Parameter	Native Sample	Duplicate Sample	Units	RPD	RPD Limits
Volatile Organics in Air (Low Level) - Mansfield Lab Associated sample(s): 01,06-07,09,12,15-16,20 QC Batch ID: WG409614-5 QC Sample: L1005748-09 Client ID: PVP-4					
1,1,1-Trichloroethane	ND	ND	ppbV	NC	25
1,1,2,2-Tetrachloroethane	ND	ND	ppbV	NC	25
1,1,2-Trichloroethane	ND	ND	ppbV	NC	25
1,1-Dichloroethane	ND	ND	ppbV	NC	25
1,1-Dichloroethene	ND	ND	ppbV	NC	25
1,2,4-Trichlorobenzene	ND	ND	ppbV	NC	25
1,2,4-Trimethylbenzene	0.391	0.444	ppbV	13	25
1,2-Dibromoethane	ND	ND	ppbV	NC	25
1,2-Dichlorobenzene	ND	ND	ppbV	NC	25
1,2-Dichloroethane	ND	ND	ppbV	NC	25
1,2-Dichloropropane	ND	ND	ppbV	NC	25
1,3,5-Trimethybenzene	ND	ND	ppbV	NC	25
1,3-Dichlorobenzene	ND	ND	ppbV	NC	25
1,4-Dichlorobenzene	ND	ND	ppbV	NC	25
1,4-Dioxane	ND	ND	ppbV	NC	25
2-Butanone	7.17	7.79	ppbV	8	25
2-Hexanone	0.345	0.382	ppbV	10	25
Acetone	66.7	75.9	ppbV	13	25
Benzene	1.99	1.92	ppbV	4	25

Lab Duplicate Analysis
Batch Quality Control

Project Name: CITY OF NEW BEDFORD
Project Number: 115058

Lab Number: L1005748
Report Date: 05/11/10

Parameter	Native Sample	Duplicate Sample	Units	RPD	RPD Limits
Volatile Organics in Air (Low Level) - Mansfield Lab Associated sample(s): 01,06-07,09,12,15-16,20 QC Batch ID: WG409614-5 QC Sample: L1005748-09 Client ID: PVP-4					
Bromodichloromethane	ND	ND	ppbV	NC	25
Bromoform	ND	ND	ppbV	NC	25
Bromomethane	ND	ND	ppbV	NC	25
Carbon disulfide	ND	ND	ppbV	NC	25
Carbon tetrachloride	ND	ND	ppbV	NC	25
Chlorobenzene	ND	ND	ppbV	NC	25
Chloroethane	ND	ND	ppbV	NC	25
Chloroform	ND	ND	ppbV	NC	25
Chloromethane	0.506	0.517	ppbV	2	25
cis-1,2-Dichloroethene	ND	ND	ppbV	NC	25
cis-1,3-Dichloropropene	ND	ND	ppbV	NC	25
Dibromochloromethane	ND	ND	ppbV	NC	25
Dichlorodifluoromethane	0.408	0.401	ppbV	2	25
Ethylbenzene	0.337	0.391	ppbV	15	25
Hexachlorobutadiene	ND	ND	ppbV	NC	25
Methylene chloride	ND	ND	ppbV	NC	25
4-Methyl-2-pentanone	0.724	0.691	ppbV	5	25
Methyl tert butyl ether	ND	ND	ppbV	NC	25
p/m-Xylene	1.08	1.24	ppbV	14	25

Lab Duplicate Analysis
Batch Quality Control

Project Name: CITY OF NEW BEDFORD
Project Number: 115058

Lab Number: L1005748
Report Date: 05/11/10

Parameter	Native Sample	Duplicate Sample	Units	RPD	RPD Limits
Volatile Organics in Air (Low Level) - Mansfield Lab Associated sample(s): 01,06-07,09,12,15-16,20 QC Batch ID: WG409614-5 QC Sample: L1005748-09 Client ID: PVP-4					
o-Xylene	0.396	0.460	ppbV	15	25
Styrene	ND	0.218	ppbV	NC	25
Tetrachloroethene	ND	ND	ppbV	NC	25
Tetrahydrofuran	ND	ND	ppbV	NC	25
Toluene	1.32	1.34	ppbV	2	25
trans-1,2-Dichloroethene	ND	ND	ppbV	NC	25
trans-1,3-Dichloropropene	ND	ND	ppbV	NC	25
Trichloroethene	1.42	1.34	ppbV	6	25
Trichlorofluoromethane	0.219	0.204	ppbV	7	25
Vinyl chloride	ND	ND	ppbV	NC	25
Naphthalene	ND	ND	ppbV	NC	25
1,1,1,2-Tetrachloroethane	ND	ND	ppbV	NC	25
Isopropylbenzene	ND	ND	ppbV	NC	25
1,2,3-Trichloropropane	ND	ND	ppbV	NC	25
Bromobenzene	ND	ND	ppbV	NC	25
Dibromomethane	ND	ND	ppbV	NC	25
tert-Amyl Methyl Ether	ND	ND	ppbV	NC	25
2-Chlorotoluene	ND	ND	ppbV	NC	25
4-Chlorotoluene	ND	ND	ppbV	NC	25

Lab Duplicate Analysis
Batch Quality Control

Project Name: CITY OF NEW BEDFORD
Project Number: 115058

Lab Number: L1005748
Report Date: 05/11/10

Parameter	Native Sample	Duplicate Sample	Units	RPD	RPD Limits
Volatile Organics in Air (Low Level) - Mansfield Lab Associated sample(s): 01,06-07,09,12,15-16,20 QC Batch ID: WG409614-5 QC Sample: L1005748-09 Client ID: PVP-4					
2,2-Dichloropropane	ND	ND	ppbV	NC	25
1,1-Dichloropropene	ND	ND	ppbV	NC	25
Diisopropyl ether	ND	ND	ppbV	NC	25
tert-Butyl Ethyl Ether	ND	ND	ppbV	NC	25
1,2,3-Trichlorobenzene	ND	ND	ppbV	NC	25
Ethyl ether	ND	ND	ppbV	NC	25
n-Butylbenzene	ND	ND	ppbV	NC	25
sec-Butylbenzene	ND	ND	ppbV	NC	25
tert-Butylbenzene	ND	ND	ppbV	NC	25
1,2-Dibromo-3-chloropropane	ND	ND	ppbV	NC	25
p-Isopropyltoluene	ND	ND	ppbV	NC	25
n-Propylbenzene	ND	ND	ppbV	NC	25
1,3-Dichloropropane	ND	ND	ppbV	NC	25

Lab Duplicate Analysis
Batch Quality Control

Project Name: CITY OF NEW BEDFORD
Project Number: 115058

Lab Number: L1005748
Report Date: 05/11/10

Parameter	Native Sample	Duplicate Sample	Units	RPD	RPD Limits
Volatile Organics in Air (Low Level) - Mansfield Lab Associated sample(s): 02,10,17,19 QC Batch ID: WG410010-5 QC Sample: L1005924-01 Client ID: DUP Sample					
Dichlorodifluoromethane	1.04	1.12	ppbV	7	25
Chloromethane	ND	ND	ppbV	NC	25
Vinyl chloride	ND	ND	ppbV	NC	25
Bromomethane	ND	ND	ppbV	NC	25
Chloroethane	ND	ND	ppbV	NC	25
Acetone	3.26	3.12	ppbV	4	25
Trichlorofluoromethane	0.929	0.957	ppbV	3	25
1,1-Dichloroethene	ND	ND	ppbV	NC	25
Methylene chloride	ND	ND	ppbV	NC	25
Carbon disulfide	0.629	0.648	ppbV	3	25
trans-1,2-Dichloroethene	ND	ND	ppbV	NC	25
1,1-Dichloroethane	ND	ND	ppbV	NC	25
Methyl tert butyl ether	0.205	0.200	ppbV	2	25
2-Butanone	1.12	1.14	ppbV	2	25
cis-1,2-Dichloroethene	ND	ND	ppbV	NC	25
Chloroform	ND	ND	ppbV	NC	25
1,2-Dichloroethane	ND	ND	ppbV	NC	25
1,1,1-Trichloroethane	ND	ND	ppbV	NC	25
Benzene	1.05	1.06	ppbV	1	25

Lab Duplicate Analysis
Batch Quality Control

Project Name: CITY OF NEW BEDFORD
Project Number: 115058

Lab Number: L1005748
Report Date: 05/11/10

Parameter	Native Sample	Duplicate Sample	Units	RPD	RPD Limits
Volatile Organics in Air (Low Level) - Mansfield Lab Associated sample(s): 02,10,17,19 QC Batch ID: WG410010-5 QC Sample: L1005924-01 Client ID: DUP Sample					
Carbon tetrachloride	ND	ND	ppbV	NC	25
1,2-Dichloropropane	ND	ND	ppbV	NC	25
Bromodichloromethane	ND	ND	ppbV	NC	25
Trichloroethene	ND	ND	ppbV	NC	25
cis-1,3-Dichloropropene	ND	ND	ppbV	NC	25
4-Methyl-2-pentanone	ND	ND	ppbV	NC	25
trans-1,3-Dichloropropene	ND	ND	ppbV	NC	25
1,1,2-Trichloroethane	ND	ND	ppbV	NC	25
Toluene	4.48	4.69	ppbV	5	25
Dibromochloromethane	ND	ND	ppbV	NC	25
1,2-Dibromoethane	ND	ND	ppbV	NC	25
Tetrachloroethene	0.238	0.256	ppbV	7	25
Chlorobenzene	ND	ND	ppbV	NC	25
Ethylbenzene	1.47	1.54	ppbV	5	25
p/m-Xylene	7.11	7.23	ppbV	2	25
Bromoform	ND	ND	ppbV	NC	25
Styrene	ND	ND	ppbV	NC	25
1,1,2,2-Tetrachloroethane	ND	ND	ppbV	NC	25
o-Xylene	2.41	2.49	ppbV	3	25

Lab Duplicate Analysis
Batch Quality Control

Project Name: CITY OF NEW BEDFORD
Project Number: 115058

Lab Number: L1005748
Report Date: 05/11/10

Parameter	Native Sample	Duplicate Sample	Units	RPD	RPD Limits
Volatile Organics in Air (Low Level) - Mansfield Lab Associated sample(s): 02,10,17,19 QC Batch ID: WG410010-5 QC Sample: L1005924-01 Client ID: DUP Sample					
2-Chlorotoluene	ND	ND	ppbV	NC	25
1,3,5-Trimethybenzene	1.16	1.21	ppbV	4	25
1,2,4-Trimethylbenzene	5.15	5.18	ppbV	1	25
1,3-Dichlorobenzene	ND	ND	ppbV	NC	25
1,4-Dichlorobenzene	ND	ND	ppbV	NC	25
1,2-Dichlorobenzene	ND	ND	ppbV	NC	25
1,2,4-Trichlorobenzene	ND	ND	ppbV	NC	25
Hexachlorobutadiene	ND	ND	ppbV	NC	25

Lab Duplicate Analysis
Batch Quality Control

Project Name: CITY OF NEW BEDFORD
Project Number: 115058

Lab Number: L1005748
Report Date: 05/11/10

Parameter	Native Sample	Duplicate Sample	Units	RPD	RPD Limits
Volatile Organics in Air by SIM - Mansfield Lab Associated sample(s): 02,10,17,19 QC Batch ID: WG410013-5 QC Sample: L1005597-17 Client ID: DUP Sample					
Vinyl chloride	ND	ND	ppbV	NC	25
trans-1,2-Dichloroethene	0.060	0.062	ppbV	3	25
cis-1,2-Dichloroethene	ND	ND	ppbV	NC	25
Chloroform	ND	ND	ppbV	NC	25
1,2-Dichloroethane	ND	ND	ppbV	NC	25
Benzene	0.127	0.120	ppbV	6	25
Carbon tetrachloride	0.082	0.079	ppbV	4	25
1,2-Dichloropropane	ND	ND	ppbV	NC	25
Bromodichloromethane	ND	ND	ppbV	NC	25
Trichloroethene	0.045	0.043	ppbV	5	25
1,4-Dioxane	ND	ND	ppbV	NC	25
cis-1,3-Dichloropropene	ND	ND	ppbV	NC	25
trans-1,3-Dichloropropene	ND	ND	ppbV	NC	25
1,1,2-Trichloroethane	ND	ND	ppbV	NC	25
Dibromochloromethane	ND	ND	ppbV	NC	25
1,2-Dibromoethane	ND	ND	ppbV	NC	25
Tetrachloroethene	0.086	0.084	ppbV	2	25
1,1,2,2-Tetrachloroethane	ND	ND	ppbV	NC	25
1,4-Dichlorobenzene	ND	ND	ppbV	NC	25

Lab Duplicate Analysis
Batch Quality Control

Project Name: CITY OF NEW BEDFORD
Project Number: 115058

Lab Number: L1005748
Report Date: 05/11/10

Parameter	Native Sample	Duplicate Sample	Units	RPD	RPD Limits
Volatile Organics in Air by SIM - Mansfield Lab Associated sample(s): 02,10,17,19 QC Batch ID: WG410013-5 QC Sample: L1005597-17 Client ID: DUP Sample					
Naphthalene	ND	ND	ppbV	NC	25
Hexachlorobutadiene	ND	ND	ppbV	NC	25

Project Name: CITY OF NEW BEDFORD **Lab Number:** L1005748

Project Number: 115058 **Report Date:** 05/11/10

Canister and Flow Controller Information

Samplenum	Client ID	Media ID	Media Type	Cleaning Batch ID	Initial Pressure (in. Hg)	Pressure on Receipt (in. Hg)	Flow Out mL/min	Flow In mL/min	% RSD
L1005748-01	PVP-1	0085	#90 SV		-	-	200	200	0
L1005748-01	PVP-1	516	2.7L Can	I1004194	-29.9	0.1	-	-	-
L1005748-02	TRC-IA-7	0114	#16 SV		-	-	3.1	3.1	0
L1005748-02	TRC-IA-7	927	6.0L Can	I1004710	-29.9	-4.5	-	-	-
L1005748-03	TRC-IA-6	0405	#16 AMB		-	-	3.2	3.2	0
L1005748-03	TRC-IA-6	988	6.0L Can	I1004710	-29.8	-2.3	-	-	-
L1005748-04	TRC-IA-8	0245	#16 AMB		-	-	3.1	3.3	6
L1005748-04	TRC-IA-8	1674	6.0L Can	L1005023	-29.9	-2.1	-	-	-
L1005748-05	TRC-IA-5	0008	#16 AMB		-	-	3.3	3.3	0
L1005748-05	TRC-IA-5	1653	6.0L Can	I1004710	-29.8	-0.8	-	-	-
L1005748-06	PVP-2	0404	#90 SV		-	-	200	203	1
L1005748-06	PVP-2	332	2.7L Can	I1004194	-29.8	-0.8	-	-	-
L1005748-07	PVP-3	0006	#90 SV		-	-	200	200	0
L1005748-07	PVP-3	531	2.7L Can	I1004194	-29.7	-3.4	-	-	-
L1005748-08	TRC-IA-10	0436	#16 AMB		-	-	3.0	3.0	0
L1005748-08	TRC-IA-10	1550	6.0L Can	I1004710	-29.6	-2.8	-	-	-
L1005748-09	PVP-4	0328	#90 SV		-	-	200	132	41

Project Name: CITY OF NEW BEDFORD **Lab Number:** L1005748

Project Number: 115058 **Report Date:** 05/11/10

Canister and Flow Controller Information

Samplenum	Client ID	Media ID	Media Type	Cleaning Batch ID	Initial Pressure (in. Hg)	Pressure on Receipt (in. Hg)	Flow Out mL/min	Flow In mL/min	% RSD
L1005748-09	PVP-4	449	2.7L Can	I1004194	-29.9	-2.7	-	-	-
L1005748-10	TRC-IA-11	0251	#16 AMB		-	-	3.1	3.3	6
L1005748-10	TRC-IA-11	1574	6.0L Can	I1004810	-29.3	-0.2	-	-	-
L1005748-11	TRC-IA-13	0372	#16 AMB		-	-	3.2	3.3	3
L1005748-11	TRC-IA-13	739	6.0L Can	I1004710	-29.9	-1.5	-	-	-
L1005748-12	PVP-5	0067	#90 SV		-	-	200	204	2
L1005748-12	PVP-5	385	2.7L Can	I1004194	-29.9	-1.0	-	-	-
L1005748-13	TRC-IA-12	0185	#16 AMB		-	-	3.3	3.4	3
L1005748-13	TRC-IA-12	1660	6.0L Can	I1004710	-29.9	-1.3	-	-	-
L1005748-14	TRC-IA-14	0246	#16 AMB		-	-	3.1	3.3	6
L1005748-14	TRC-IA-14	1538	6.0L Can	I1004710	-29.8	-3.0	-	-	-
L1005748-15	PVP-7	0435	#90 SV		-	-	200	203	1
L1005748-15	PVP-7	547	2.7L Can	L1005024	-29.3	-0.5	-	-	-
L1005748-16	PVP-8	0059	#90 SV		-	-	200	200	0
L1005748-16	PVP-8	207	2.7L Can	I1004812	-29.9	-3.2	-	-	-
L1005748-17	TRC-IA-9	0199	#16 AMB		-	-	3.2	3.3	3
L1005748-17	TRC-IA-9	1565	6.0L Can	I1004810	-29.9	-1.4	-	-	-

Project Name: CITY OF NEW BEDFORD

Lab Number: L1005748

Project Number: 115058

Report Date: 05/11/10

Canister and Flow Controller Information

Samplenum	Client ID	Media ID	Media Type	Cleaning Batch ID	Initial Pressure (in. Hg)	Pressure on Receipt (in. Hg)	Flow Out mL/min	Flow In mL/min	% RSD
L1005748-18	TRC-IA-15	0069	#16 AMB		-	-	3.3	3.5	6
L1005748-18	TRC-IA-15	706	6.0L Can	I1004710	-28.3	-0.5	-	-	-
L1005748-19	TRC-IA-1	0393	#16 AMB		-	-	3.1	3.3	6
L1005748-19	TRC-IA-1	1564	6.0L Can	I1004810	-28.3	-1.9	-	-	-
L1005748-20	PVP-6	0223	#90 SV		-	-	200	224	11
L1005748-20	PVP-6	405	2.7L Can	I1004194	-29.0	-0.3	-	-	-

Project Name: CITY OF NEW BEDFORD
Project Number: 115058

Lab Number: L1005748
Report Date: 05/11/10

Sample Receipt and Container Information

Were project specific reporting limits specified? YES

Reagent H2O Preserved Vials Frozen on: NA

Cooler Information Custody Seal

Cooler	
N/A	Present/Intact

Container Information

Container ID	Container Type	Cooler	pH	Temp deg C	Pres	Seal	Analysis(*)
L1005748-01A	Canister - 2.7 Liter	N/A	N/A		NA	Present/Intact	TO15-LL(30)
L1005748-02A	Canister - 6 Liter	N/A	N/A		NA	Present/Intact	TO15-LL(30),TO15-SIM(30)
L1005748-03A	Canister - 6 Liter	N/A	N/A		NA	Present/Intact	TO15-LL(30),TO15-SIM(30)
L1005748-04A	Canister - 6 Liter	N/A	N/A		NA	Present/Intact	TO15-LL(30),TO15-SIM(30)
L1005748-05A	Canister - 6 Liter	N/A	N/A		NA	Present/Intact	TO15-LL(30),TO15-SIM(30)
L1005748-06A	Canister - 2.7 Liter	N/A	N/A		NA	Present/Intact	TO15-LL(30)
L1005748-07A	Canister - 2.7 Liter	N/A	N/A		NA	Present/Intact	TO15-LL(30)
L1005748-08A	Canister - 6 Liter	N/A	N/A		NA	Present/Intact	TO15-LL(30),TO15-SIM(30)
L1005748-09A	Canister - 2.7 Liter	N/A	N/A		NA	Present/Intact	TO15-LL(30)
L1005748-10A	Canister - 6 Liter	N/A	N/A		NA	Present/Intact	TO15-LL(30),TO15-SIM(30)
L1005748-11A	Canister - 6 Liter	N/A	N/A		NA	Present/Intact	TO15-LL(30),TO15-SIM(30)
L1005748-12A	Canister - 2.7 Liter	N/A	N/A		NA	Present/Intact	TO15-LL(30)
L1005748-13A	Canister - 6 Liter	N/A	N/A		NA	Present/Intact	TO15-LL(30),TO15-SIM(30)
L1005748-14A	Canister - 6 Liter	N/A	N/A		NA	Present/Intact	TO15-LL(30),TO15-SIM(30)
L1005748-15A	Canister - 2.7 Liter	N/A	N/A		NA	Present/Intact	TO15-LL(30)
L1005748-16A	Canister - 2.7 Liter	N/A	N/A		NA	Present/Intact	TO15-LL(30)
L1005748-17A	Canister - 6 Liter	N/A	N/A		NA	Present/Intact	TO15-LL(30),TO15-SIM(30)
L1005748-18A	Canister - 6 Liter	N/A	N/A		NA	Present/Intact	TO15-LL(30),TO15-SIM(30)
L1005748-19A	Canister - 6 Liter	N/A	N/A		NA	Present/Intact	TO15-LL(30),TO15-SIM(30)
L1005748-20A	Canister - 2.7 Liter	N/A	N/A		NA	Present/Intact	TO15-LL(30)
L1005748-21A	Canister - 6 Liter	N/A	N/A		NA	Present/Intact	CLEAN-FEE()
L1005748-22A	Canister - 6 Liter	N/A	N/A		NA	Present/Intact	CLEAN-FEE()
L1005748-23A	Canister - 6 Liter	N/A	N/A		NA	Present/Intact	CLEAN-FEE()
L1005748-24A	Canister - 2.7 Liter	N/A	N/A		NA	Present/Intact	CLEAN-FEE()

*Values in parentheses indicate holding time in days

GLOSSARY

Acronyms

EPA · Environmental Protection Agency.

LCS · Laboratory Control Sample: A sample matrix, free from the analytes of interest, spiked with verified known amounts of analytes or a material containing known and verified amounts of analytes.

LCSD · Laboratory Control Sample Duplicate: Refer to LCS.

MDL · Method Detection Limit: This value represents the level to which target analyte concentrations are reported as estimated values, when those target analyte concentrations are quantified below the reporting limit (RL). The MDL includes any adjustments from dilutions, concentrations or moisture content, where applicable.

MS · Matrix Spike Sample: A sample prepared by adding a known mass of target analyte to a specified amount of matrix sample for which an independent estimate of target analyte concentration is available.

MSD · Matrix Spike Sample Duplicate: Refer to MS.

NA · Not Applicable.

NC · Not Calculated: Term is utilized when one or more of the results utilized in the calculation are non-detect at the parameter's reporting unit.

NI · Not Ignitable.

RL · Reporting Limit: The value at which an instrument can accurately measure an analyte at a specific concentration. The RL includes any adjustments from dilutions, concentrations or moisture content, where applicable.

RPD · Relative Percent Difference: The results from matrix and/or matrix spike duplicates are primarily designed to assess the precision of analytical results in a given matrix and are expressed as relative percent difference (RPD). Values which are less than five times the reporting limit for any individual parameter are evaluated by utilizing the absolute difference between the values; although the RPD value will be provided in the report.

Terms

Analytical Method: Both the document from which the method originates and the analytical reference method. (Example: EPA 8260B is shown as 1,8260B.) The codes for the reference method documents are provided in the References section of the Addendum.

Data Qualifiers

A · Spectra identified as "Aldol Condensation Product".

B · The analyte was detected above the reporting limit in the associated method blank. Flag only applies to associated field samples that have detectable concentrations of the analyte at less than five times (5x) the concentration found in the blank. For MCP-related projects, flag only applies to associated field samples that have detectable concentrations of the analyte at less than ten times (10x) the concentration found in the blank. For DOD-related projects, flag only applies to associated field samples that have detectable concentrations of the analyte at less than ten times (10x) the concentration found in the blank AND the analyte was detected above one-half the reporting limit (or above the reporting limit for common lab contaminants) in the associated method blank.

D · Concentration of analyte was quantified from diluted analysis. Flag only applies to field samples that have detectable concentrations of the analyte.

E · Concentration of analyte exceeds the range of the calibration curve and/or linear range of the instrument.

H · The analysis of pH was performed beyond the regulatory-required holding time of 15 minutes from the time of sample collection.

P · The RPD between the results for the two columns exceeds the method-specified criteria.

Q · The quality control sample exceeds the associated acceptance criteria. Note: This flag is not applicable for matrix spike recoveries when the sample concentration is greater than 4x the spike added or for batch duplicate RPD when the sample concentrations are less than 5x the RL. (Metals only.)

R · Analytical results are from sample re-analysis.

RE · Analytical results are from sample re-extraction.

Data Qualifiers

J - Estimated value. This represents an estimated concentration for Tentatively Identified Compounds (TICs).
ND - Not detected at the reporting limit (RL) for the sample.

Report Format: Data Usability Report

REFERENCES

48 Compendium of Methods for the Determination of Toxic Organic Compounds in Ambient Air. Second Edition. EPA/625/R-96/010b, January 1999.

LIMITATION OF LIABILITIES

Alpha Analytical performs services with reasonable care and diligence normal to the analytical testing laboratory industry. In the event of an error, the sole and exclusive responsibility of Alpha Analytical shall be to re-perform the work at it's own expense. In no event shall Alpha Analytical be held liable for any incidental, consequential or special damages, including but not limited to, damages in any way connected with the use of, interpretation of, information or analysis provided by Alpha Analytical.

We strongly urge our clients to comply with EPA protocol regarding sample volume, preservation, cooling, containers, sampling procedures, holding time and splitting of samples in the field.

Certificate/Approval Program Summary

Last revised December 15, 2009 – Mansfield Facility

The following list includes only those analytes/methods for which certification/approval is currently held.
For a complete listing of analytes for the referenced methods, please contact your Alpha Customer Service Representative.

Connecticut Department of Public Health Certificate/Lab ID: PH-0141.

Wastewater/Non-Potable Water (Inorganic Parameters: pH, Turbidity, Conductivity, Alkalinity, Aluminum, Antimony, Arsenic, Barium, Beryllium, Boron, Cadmium, Calcium, Chromium, Cobalt, Copper, Iron, Lead, Magnesium, Manganese, Mercury, Molybdenum, Nickel, Potassium, Selenium, Silver, Sodium, Strontium, Thallium, Tin, Vanadium, Zinc, Total Residue (Solids), Total Suspended Solids (non-filterable), Total Cyanide. Organic Parameters: PCBs, Organochlorine Pesticides, Technical Chlordane, Toxaphene, Acid Extractables, Benzidines, Phthalate Esters, Nitrosamines, Nitroaromatics & Isophorone, PAHs, Haloethers, Chlorinated Hydrocarbons, Volatile Organics.)

Solid Waste/Soil (Inorganic Parameters: pH, Aluminum, Antimony, Arsenic, Barium, Beryllium, Cadmium, Calcium, Chromium, Hexavalent Chromium, Cobalt, Copper, Iron, Lead, Magnesium, Manganese, Mercury, Molybdenum, Nickel, Potassium, Selenium, Silver, Sodium, Thallium, Vanadium, Zinc, Total Organic Carbon, Total Cyanide, Corrosivity, TCLP 1311. Organic Parameters: PCBs, Organochlorine Pesticides, Technical Chlordane, Toxaphene, Volatile Organics, Acid Extractables, Benzidines, Phthalates, Nitrosamines, Nitroaromatics & Cyclic Ketones, PAHs, Haloethers, Chlorinated Hydrocarbons.)

Florida Department of Health Certificate/Lab ID: E87814. ***NELAP Accredited.***

Non-Potable Water (Inorganic Parameters: SM2320B, EPA 120.1, SM2510B, EPA 245.1, EPA 150.1, EPA 160.2, SM2540D, EPA 335.2, SM2540G, EPA 180.1. Organic Parameters: EPA 625, 608.)

Solid & Chemical Materials (Inorganic Parameters: 6020, 7470, 7471, 9045, 9014. Organic Parameters: EPA 8260, 8270, 8082, 8081.)

Air & Emissions (EPA TO-15.)

Louisiana Department of Environmental Quality Certificate/Lab ID: 03090. ***NELAP Accredited.***

Non-Potable Water (Inorganic Parameters: EPA 120.1, 150.1, 160.2, 180.1, 200.8, 245.1, 310.1, 335.2, 608, 625, 1631, 3010, 3015, 3020, 6020, 9010, 9014, 9040, SM2320B, 2510B, 2540D, 2540G, 4500CN-E, 4500H-B, Organic Parameters: EPA 3510, 3580, 3630, 3640, 3660, 3665, 5030, 8015 (mod), 3570, 8081, 8082, 8260, 8270,)

Solid & Chemical Materials (Inorganic Parameters: 6020, 7196, 7470, 7471, 7474, 9010, 9014, 9040, 9045, 9060. Organic Parameters: EPA 8015 (mod), EPA 3570, 1311, 3050, 3051, 3060, 3580, 3630, 3640, 3660, 3665, 5035, 8081, 8082, 8260, 8270.)

Biological Tissue (Inorganic Parameters: EPA 6020. Organic Parameters: EPA 3570, 3510, 3610, 3630, 3640, 8270.)

Maine Department of Human Services Certificate/Lab ID: MA0030.

Wastewater (Inorganic Parameters: EPA 120.1, 300.0, SM 2320, 2510B, 2540C, 2540D, EPA 245.1. Organic Parameters: 608, 624.)

Massachusetts Department of Environmental Protection Certificate/Lab ID: M-MA030.

Non-Potable Water (Inorganic Parameters: SM4500H+B. Organic Parameters: EPA 624.)

New Hampshire Department of Environmental Services Certificate/Lab ID: 2206. ***NELAP Accredited.***

Non-Potable Water (Inorganic Parameters: EPA 200.8, 245.1, 1631E, 120.1, 150.1, 180.1, 310.1, 335.2, 160.2, SM2540D, 2540G, 4500CN-E, 4500H+B, 2320B, 2510B. Organic Parameters: EPA 625, 608.)

New Jersey Department of Environmental Protection Certificate/Lab ID: MA015. ***NELAP Accredited.***

Non-Potable Water (Inorganic Parameters: SW-846 1312, 3010, 3020A, 3015, 6020, SM2320B, EPA 200.8, SM2540C, 2540D, 2540G, EPA 120.1, SM2510B, EPA 180.1, 245.1, 1631E, SW-846 9040B, 6020, 9010B, 9014 Organic Parameters: EPA 608, 625, SW-846 3510C, 3580A, 5030B, 3035L, 5035H, 3630C, 3640A, 3660B, 3665A, 8081A, 8082 8260B, 8270C)

Solid & Chemical Materials (Inorganic Parameters: SW-846 6020, 9010B, 9014, 1311, 1312, 3050B, 3051, 3060A, 7196A, 7470A, 7471A, 9045C, 9060. Organic Parameters: SW-846 3580A, 5030B, 3035L, 5035H, 3630C, 3640A, 3660B, 3665A, 8081A, 8082, 8260B, 8270C, 3570, 8015B.)

Atmospheric Organic Parameters (EPA TO-15)

Biological Tissue (Inorganic Parameters: SW-846 6020 Organic Parameters: SW-846 8270C, 3510C, 3570, 3610B, 3630C, 3640A)

New York Department of Health Certificate/Lab ID: 11627. ***NELAP Accredited.***

Non-Potable Water (Inorganic Parameters: EPA 310.1, SM2320B, EPA 365.2, 160.1, EPA 160.2, SM2540D, EPA 200.8, 6020, 1631E, 245.1, 335.2, 9014, 150.1, 9040B, 120.1, SM2510B, EPA 376.2, 180.1, 9010B. Organic Parameters: EPA 624, 8260B, 8270C, 608, 8081A, 625, 8082, 3510C, 3511, 5030B.)

Solid & Hazardous Waste (Inorganic Parameters: EPA 9040B, 9045C, SW-846 Ch7 Sec 7.3, EPA 6020, 7196A, 7471A, 7474, 9014, 9040B, 9045C, 9010B. Organic Parameters: EPA 8260B, 8270C, 8081A, DRO 8015B, 8082, 1311, 3050B, 3580, 3050B, 3035, 3570, 3051, 5035, 5030B.)

Air & Emissions (EPA TO-15.)

Pennsylvania Department of Environmental Protection Certificate/Lab ID: 68-02089. ***NELAP Accredited.***

Non-Potable Water (Organic Parameters: EPA 5030B, EPA 8260)

Rhode Island Department of Health Certificate/Lab ID: LAO00299. ***NELAP Accredited via LA-DEQ.***

Refer to MA-DEP Certificate for Non-Potable Water.

Refer to LA-DEQ Certificate for Non-Potable Water.

Texas Commission of Environmental Quality Certificate/Lab ID: T104704419-08-TX. ***NELAP Accredited.***

Solid & Chemical Materials (Inorganic Parameters: EPA 6020, 7470, 7471, 1311, 7196, 9014, 9040, 9045, 9060. Organic Parameters: EPA 8015, 8270, 8260, 8081, 8082.)

U.S. Army Corps of Engineers

Department of Defense Certificate/Lab ID: L2217.01.

Non-Potable Water (Inorganic Parameters: EPA 3005A,3020, 6020, 245.1, 245.7, 1631E, 7470A, 7474, 9014, 120.1, 9050A, 180.1, SM4500H-B, 2320B, 2510B, 2540D,9040. Organic Parameters: EPA 3510C, 5030B, 9010B, 624, 8260B, 8270C, 8270 Alk-PAH, 8082, 8081A, 8015 (SHC), 8015 (DRO).)

Solid & Hazardous Waste (Inorganic Parameters: EPA 1311, 1312,3051, 6020, 747A, 7474, 9045C,9060, SM 2540G, ASTM D422-63. Organic Parameters: EPA 3580, 3570, 3540C, 5035, 8260B, 8270C, 8270 Alk-PAH, 8082, 8081A, 8015 (SHC), 8015 (DRO).

Air & Emissions (EPA TO-15.)

Analytes Not Accredited by NELAP
Certification is not available by NELAP for the following analytes: **8270C:** Biphenyl.

AIR ANALYSIS

PAGE 1 OF 2

ALPHA ANALYTICAL — CHAIN OF CUSTODY

320 Forbes Blvd, Mansfield, MA 02048
TEL: 508-822-9300 FAX: 508-822-3288

Date Rec'd in Lab:

ALPHA Job #: L1005748

Client Information

Client: TRC
Address: 650 Suffolk St. Lowell MA 01854
Phone: 978-970-5600
Fax:
Email: dsullivan@TRC solutions.com
☐ These samples have been previously analyzed by Alpha

Project Information

Project Name: City of New Bedford
Project Location: NYBHS
Project #: 115058
Project Manager: David Sullivan
ALPHA Quote #:

Turn-Around Time

☒ Standard ☐ RUSH (only confirmed if pre-approved)
Date Due: Time:

Report Information - Data Deliverables

☐ FAX
☐ ADEx
Criteria Checker:
(Default based on Regulatory Criteria indicated)
Other Formats:
☒ EMAIL (standard pdf report)
☐ Additional Deliverables:
Report to: (if different than Project Manager)

Billing Information

☐ Same as Client info PO #:

Regulatory Requirements/Report Limits

State/Fed	Program	Criteria

UNUSED CANISTERS INCLUDED

Other Project Specific Requirements/Comments:
* A prefix of TRC- was added to all IA samples per John Mulhall

SV = TO-15
AA - TO-15 SIM

All Columns Below Must Be Filled Out

ALPHA Lab ID (Lab Use Only)	Sample ID	Collection Date	Start Time	End Time	Initial Vacuum	Final Vacuum	Sample Matrix*	Sampler's Initials	Can Size	ID Can	ID - Flow Controller	TO-14A by TO-15	TO-15	TO-15 SIM	APH	FIXED GASES	TO-13A	TO-4 TO-10	ROOM # / Sample Comments (i.e. PID)
5748-1	PVP-1	4/20/10	0920	0936	-29.9	-3	SV	JM	2.7L	516	0085		X						A-115-4
-2	IA-7		0910	0910	-29.9	-5	AA	JM	6L	927	0114			X					A-105-4
-3	IA-6		0905	0905	-29.8	-4	AA	JM	6L	988	0405			X					A-115-4
-4	IA-8		0921	0921	-29.9	-5	AA	JM	6L	1674	0245			X					A-115-3
-5	IA-5		0923	0923	-29.8	-2	AA	JM	6L	1653	0008			X					A-112-3
-6	PVP-2		0958	1012	-29.8	-3	SV	JM	2.7L	333	0404		X	~~X~~					A-115-3
-7	PVP-3		1017	1029	-29.7	-4	SV	AW	2.7L	531	0006		X	~~X~~					A-112-3
-8	IA-10		0928	0930	-29.5	-4	AA	JM	6L	550	0436			X					A-115-2
-9	PVP-4		1050	1105	-29.9	-3	SV	AW	2.7L	449	0328		X						A-115-2
-10	IA-11		0930 ~~1125~~	0950 ~~1120~~	-29.3	-1	AA	JM	6L	1574	0251			X					A-105-2
										Container Type		CS	CS						

*SAMPLE MATRIX CODES
AA = Ambient Air (Indoor/Outdoor)
SV = Soil Vapor/Landfill Gas/SVE
Other = Please Specify

Relinquished By:	Date/Time	Received By:	Date/Time:
[illegible]	4/21/10 11:55	P. Gillett	4/21/10 11:55
P. Gillett	4/21/10 16:20	Celia Sullivan	4/21/10 16:20

Please print clearly, legibly and completely. Samples can not be logged in and turnaround time clock will not start until any ambiguities are resolved. All samples submitted are subject to Alpha's Terms and Conditions. See reverse side.

Form No: 101-02 (19-Jun-09)

AIR ANALYSIS

PAGE 2 OF 2

CHAIN OF CUSTODY

ALPHA ANALYTICAL
320 Forbes Blvd, Mansfield, MA 02048
TEL: 508-822-9300 FAX: 508-822-3288

Date Rec'd In Lab:

ALPHA Job #: L1005748

Client Information

Client: TRC
Address: 650 SUFFOLK St
Lowell MA 01854
Phone: 978-970-5600
Fax:
Email: dsullivan@TRCsolutions.com
☐ These samples have been previously analyzed by Alpha

Project Information

Project Name: City of New Bedford
Project Location: NBHS
Project #: 115058
Project Manager:
ALPHA Quote #:

Turn-Around Time

☒ Standard ☐ RUSH (only confirmed if pre-approved!)
Date Due: Time:

Report Information - Data Deliverables

☐ FAX
☐ ADEx
Criteria Checker:
(Default based on Regulatory Criteria Indicated)
Other Formats:
☒ EMAIL (standard pdf report)
☐ Additional Deliverables:
Report to: (if different than Project Manager)

Billing Information

☐ Same as Client info PO #:

Regulatory Requirements/Report Limits

State/Fed	Program	Criteria

Other Project Specific Requirements/Comments:

UNUSED CANISTERS INCLUDES
AA=TO15 SIM
SV=TO-15

All Columns Below Must Be Filled Out

ALPHA Lab ID (Lab Use Only)	Sample ID	Collection Date	Start Time	End Time	Initial Vacuum	Final Vacuum	Sample Matrix*	Sampler's Initials	Can Size	ID Can	ID - Flow Controller	TO-14A by TO-15	(TO-15)	TO-15 SIM	APH	FIXED GASES	TO-13A	TO-4 / TO-10	Sample Comments (i.e. PID)
5748-11	IA-13	4/20/10	1102	1110	-29.9	-2	AA	JM	6L	739	0372			X					A-112-2
-12	PVP-5		1125	1140	-29.9	-4	SV	JM	2.7L	385	0067		X						A-105-1
-13	IA-12		1053	1100	-29.9	-5	AA	JM	6L	1600	0185			X					A-116-1
-14	IA-KP		1047	1055	-29.8	-6	AA	JM	6L	538	0246			X					A-110-1
-15	PVP-7		1157	1210	-29.3	~~-2~~ -5	SV	JM	2.7L	547	0435		X						D-105
-16	PVP-8		1215	1226	-29.9	-3	SV	JM	2.7L	207	0059		X						D-116
-17	IA-9		1145	1145	-29.9	-6	AA	JM	6L	565	0199			X					A-105-3
-18	IA-15		0958	1000	-28.3	-4.5	AA	JM	6L	700	0069			X					D-120
-19	IA-1		1002	1004	-28.3	-3	AA	JM	6L	1564	0393			X					B-114
-20	PVP-6		1418	1431	-29.0		SV	JM	2.7L	405	0223		X						B-114

*SAMPLE MATRIX CODES
AA = Ambient Air (Indoor/Outdoor)
SV = Soil Vapor/Landfill Gas/SVE
Other = Please Specify

Container Type			CS	CS			

Relinquished By:	Date/Time	Received By:	Date/Time:
[signature]	4/21/10 11:55	P. Gilbert	4/21/10 11:55
P. Gilbert	4/21/10 16:00	Eileen Sullivan	4/21/10 16:20

Please print clearly, legibly and completely. Samples can not be logged in and turnaround time clock will not start until any ambiguities are resolved. All samples submitted are subject to Alpha's Terms and Conditions. See reverse side.

Form No: 101-02 (19-Jun-09)

Project Name:	BATCH CANISTER CERTIFICATION	**Lab Number:**	L1004194
Project Number:	CANISTER QC BAT	**Report Date:**	05/10/10

Case Narrative

The samples were received in accordance with the Chain of Custody and no significant deviations were encountered during the preparation or analysis unless otherwise noted. Sample Receipt, Container Information, and the Chain of Custody are located at the back of the report.

Results contained within this report relate only to the samples submitted under this Alpha Lab Number and meet all of the requirements of NELAC, for all NELAC accredited parameters. The data presented in this report is organized by parameter (i.e. VOC, SVOC, etc.). Sample specific Quality Control data (i.e. Surrogate Spike Recovery) is reported at the end of the target analyte list for each individual sample, followed by the Laboratory Batch Quality Control at the end of each parameter. If a sample was re-analyzed or re-extracted due to a required quality control corrective action and if both sets of data are reported, the Laboratory ID of the re-analysis or re-extraction is designated with an "R" or "RE", respectively. When multiple Batch Quality Control elements are reported (e.g. more than one LCS), the associated samples for each element are noted in the grey shaded header line of each data table. Any Laboratory Batch, Sample Specific % recovery or RPD value that is outside the listed Acceptance Criteria is bolded in the report. Definitions of all data qualifiers and acronyms used in this report are provided in the Glossary located at the back of the report.

Please see the associated ADEx data file for a comparison of laboratory reporting limits that were achieved with the regulatory Numerical Standards requested on the Chain of Custody.

For additional information, please contact Client Services at 800-624-9220.

Batch Canister Certification

Volatile Organics in Air (Low Level)

The WG405591-3 LCS recoveries for Acrolein (59%) and 1,2,4-Trichlorobenzene (132%) are outside the 70%-130% acceptance limit. The LCS was within overall method allowances, therefore the analysis proceeded.

MCP Related Narratives

Petroleum Hydrocarbons in Air

All MCP required questions were answered with affirmative responses; therefore, there are no relevant data issues to discuss.

Project Name:	BATCH CANISTER CERTIFICATION	***Lab Number:***	L1004194
Project Number:	CANISTER QC BAT	***Report Date:***	05/10/10

SAMPLE RESULTS

Lab ID:	L1004194-01	Date Collected:	03/23/10 00:00
Client ID:	CAN 212 SHELF 7	Date Received:	03/23/10
Sample Location:		Field Prep:	Not Specified
Matrix:	Air		
Anaytical Method:	48,TO-15		
Analytical Date:	03/26/10 18:30		
Analyst:	RY		

	ppbV			ug/m3				
Parameter	**Results**	**RL**	**MDL**	**Results**	**RL**	**MDL**	**Qualifier**	**Dilution Factor**
Volatile Organics in Air (Low Level) - Mansfield Lab								
1,1,1-Trichloroethane	ND	0.200	--	ND	1.09	--		1
1,1,2,2-Tetrachloroethane	ND	0.200	--	ND	1.37	--		1
1,1,2-Trichloroethane	ND	0.200	--	ND	1.09	--		1
1,1-Dichloroethane	ND	0.200	--	ND	0.809	--		1
1,1-Dichloroethene	ND	0.200	--	ND	0.792	--		1
1,2,4-Trichlorobenzene	ND	0.200	--	ND	1.48	--		1
1,2,4-Trimethylbenzene	ND	0.200	--	ND	0.982	--		1
1,2-Dibromoethane	ND	0.200	--	ND	1.54	--		1
1,2-Dichlorobenzene	ND	0.200	--	ND	1.20	--		1
1,2-Dichloroethane	ND	0.200	--	ND	0.809	--		1
1,2-Dichloropropane	ND	0.200	--	ND	0.924	--		1
1,3,5-Trimethybenzene	ND	0.200	--	ND	0.982	--		1
1,3-Butadiene	ND	0.200	--	ND	0.442	--		1
1,3-Dichlorobenzene	ND	0.200	--	ND	1.20	--		1
1,4-Dichlorobenzene	ND	0.200	--	ND	1.20	--		1
1,4-Dioxane	ND	0.200	--	ND	0.720	--		1
2,2,4-Trimethylpentane	ND	0.200	--	ND	0.934	--		1
2-Butanone	ND	0.200	--	ND	0.589	--		1
2-Hexanone	ND	0.200	--	ND	0.819	--		1
3-Chloropropene	ND	0.200	--	ND	0.626	--		1
4-Ethyltoluene	ND	0.200	--	ND	0.982	--		1
Acetone	ND	1.00	--	ND	2.37	--		1
Benzene	ND	0.200	--	ND	0.638	--		1
Benzyl chloride	ND	0.200	--	ND	1.03	--		1
Bromodichloromethane	ND	0.200	--	ND	1.34	--		1

Project Name: BATCH CANISTER CERTIFICATION **Lab Number:** L1004194

Project Number: CANISTER QC BAT **Report Date:** 05/10/10

SAMPLE RESULTS

Lab ID: L1004194-01 Date Collected: 03/23/10 00:00

Client ID: CAN 212 SHELF 7 Date Received: 03/23/10

Sample Location: Field Prep: Not Specified

Parameter	ppbV Results	ppbV RL	ppbV MDL	ug/m3 Results	ug/m3 RL	ug/m3 MDL	Qualifier	Dilution Factor
Volatile Organics in Air (Low Level) - Mansfield Lab								
Bromoform	ND	0.200	--	ND	2.06	--		1
Bromomethane	ND	0.200	--	ND	0.776	--		1
Carbon disulfide	ND	0.200	--	ND	0.622	--		1
Carbon tetrachloride	ND	0.200	--	ND	1.26	--		1
Chlorobenzene	ND	0.200	--	ND	0.920	--		1
Chloroethane	ND	0.200	--	ND	0.527	--		1
Chloroform	ND	0.200	--	ND	0.976	--		1
Chloromethane	ND	0.200	--	ND	0.413	--		1
cis-1,2-Dichloroethene	ND	0.200	--	ND	0.792	--		1
cis-1,3-Dichloropropene	ND	0.200	--	ND	0.907	--		1
Cyclohexane	ND	0.200	--	ND	0.688	--		1
Dibromochloromethane	ND	0.200	--	ND	1.70	--		1
Dichlorodifluoromethane	ND	0.200	--	ND	0.988	--		1
Ethanol	ND	2.50	--	ND	4.71	--		1
Ethyl Acetate	ND	0.500	--	ND	1.80	--		1
Ethylbenzene	ND	0.200	--	ND	0.868	--		1
Freon-113	ND	0.200	--	ND	1.53	--		1
Freon-114	ND	0.200	--	ND	1.40	--		1
Hexachlorobutadiene	ND	0.200	--	ND	2.13	--		1
Isopropanol	ND	0.500	--	ND	1.23	--		1
Methylene chloride	ND	0.500	--	ND	1.74	--		1
4-Methyl-2-pentanone	ND	0.200	--	ND	0.819	--		1
Methyl tert butyl ether	ND	0.200	--	ND	0.720	--		1
p/m-Xylene	ND	0.400	--	ND	1.74	--		1
o-Xylene	ND	0.200	--	ND	0.868	--		1
Heptane	ND	0.200	--	ND	0.819	--		1
n-Hexane	ND	0.200	--	ND	0.704	--		1
Propylene	ND	0.200	--	ND	0.344	--		1

Project Name:	BATCH CANISTER CERTIFICATION	***Lab Number:***	L1004194
Project Number:	CANISTER QC BAT	***Report Date:***	05/10/10

SAMPLE RESULTS

Lab ID:	L1004194-01	Date Collected:	03/23/10 00:00
Client ID:	CAN 212 SHELF 7	Date Received:	03/23/10
Sample Location:		Field Prep:	Not Specified

	ppbV			ug/m3				
Parameter	**Results**	**RL**	**MDL**	**Results**	**RL**	**MDL**	**Qualifier**	**Dilution Factor**
Volatile Organics in Air (Low Level) - Mansfield Lab								
Styrene	ND	0.200	--	ND	0.851	--		1
Tetrachloroethene	ND	0.200	--	ND	1.36	--		1
Tetrahydrofuran	ND	0.200	--	ND	0.589	--		1
Toluene	ND	0.200	--	ND	0.753	--		1
trans-1,2-Dichloroethene	ND	0.200	--	ND	0.792	--		1
trans-1,3-Dichloropropene	ND	0.200	--	ND	0.907	--		1
Trichloroethene	ND	0.200	--	ND	1.07	--		1
Trichlorofluoromethane	ND	0.200	--	ND	1.12	--		1
Vinyl acetate	ND	0.200	--	ND	0.704	--		1
Vinyl bromide	ND	0.200	--	ND	0.874	--		1
Vinyl chloride	ND	0.200	--	ND	0.511	--		1
Naphthalene	ND	0.200	--	ND	1.05	--		1
Propane	ND	0.200	--	ND	0.606	--		1
Acrylonitrile	ND	0.200	--	ND	0.434	--		1
Acrolein	ND	0.500	--	ND	1.14	--		1
1,1,1,2-Tetrachloroethane	ND	0.200	--	ND	1.37	--		1
Isopropylbenzene	ND	0.200	--	ND	0.982	--		1
1,2,3-Trichloropropane	ND	0.200	--	ND	1.20	--		1
Acetonitrile	ND	0.200	--	ND	0.336	--		1
Bromobenzene	ND	0.200	--	ND	1.28	--		1
Chlorodifluoromethane	ND	0.200	--	ND	0.707	--		1
Dichlorofluoromethane	ND	0.200	--	ND	0.841	--		1
Dibromomethane	ND	0.200	--	ND	1.42	--		1
Pentane	ND	0.200	--	ND	0.590	--		1
Octane	ND	0.200	--	ND	0.934	--		1
tert-Amyl Methyl Ether	ND	0.200	--	ND	0.835	--		1
2-Chlorotoluene	ND	0.200	--	ND	1.03	--		1
4-Chlorotoluene	ND	0.200	--	ND	1.03	--		1

Project Name:	BATCH CANISTER CERTIFICATION	***Lab Number:***	L1004194
Project Number:	CANISTER QC BAT	***Report Date:***	05/10/10

SAMPLE RESULTS

Lab ID:	L1004194-01	Date Collected:	03/23/10 00:00
Client ID:	CAN 212 SHELF 7	Date Received:	03/23/10
Sample Location:		Field Prep:	Not Specified

	ppbV			ug/m3				
Parameter	**Results**	**RL**	**MDL**	**Results**	**RL**	**MDL**	**Qualifier**	**Dilution Factor**
Volatile Organics in Air (Low Level) - Mansfield Lab								
2,2-Dichloropropane	ND	0.200	--	ND	0.923	--		1
1,1-Dichloropropene	ND	0.200	--	ND	0.907	--		1
Diisopropyl ether	ND	0.200	--	ND	0.835	--		1
tert-Butyl Ethyl Ether	ND	0.200	--	ND	0.835	--		1
1,2,3-Trichlorobenzene	ND	0.200	--	ND	1.48	--		1
Ethyl ether	ND	0.200	--	ND	0.606	--		1
n-Butylbenzene	ND	0.200	--	ND	1.10	--		1
sec-Butylbenzene	ND	0.200	--	ND	1.10	--		1
tert-Butylbenzene	ND	0.200	--	ND	1.10	--		1
1,2-Dibromo-3-chloropropane	ND	0.200	--	ND	1.93	--		1
p-Isopropyltoluene	ND	0.200	--	ND	1.10	--		1
n-Propylbenzene	ND	0.200	--	ND	0.982	--		1
1,3-Dichloropropane	ND	0.200	--	ND	0.923	--		1
Butane	ND	0.200	--	ND	0.475	--		1
Nonane	ND	0.200	--	ND	1.05	--		1
Decane	ND	0.200	--	ND	1.16	--		1
Undecane	ND	0.200	--	ND	1.28	--		1
Dodecane	ND	0.200	--	ND	1.39	--		1
Butyl acetate	ND	0.500	--	ND	2.37	--		1
Tertiary butyl Alcohol	ND	0.500	--	ND	1.52	--		1

Project Name:	BATCH CANISTER CERTIFICATION	***Lab Number:***	L1004194
Project Number:	CANISTER QC BAT	***Report Date:***	05/10/10

SAMPLE RESULTS

Lab ID:	L1004194-01	Date Collected:	03/23/10 00:00
Client ID:	CAN 212 SHELF 7	Date Received:	03/23/10
Sample Location:		Field Prep:	Not Specified
Matrix:	Air		
Anaytical Method:	48,TO-15-SIM		
Analytical Date:	03/26/10 18:30		
Analyst:	RY		

	ppbV			ug/m3				
Parameter	**Results**	**RL**	**MDL**	**Results**	**RL**	**MDL**	**Qualifier**	**Dilution Factor**
Volatile Organics in Air by SIM - Mansfield Lab								
1,1,1-Trichloroethane	ND	0.020	--	ND	0.109	--		1
1,1,1,2-Tetrachloroethane	ND	0.020	--	ND	0.137	--		1
1,1,2,2-Tetrachloroethane	ND	0.020	--	ND	0.137	--		1
1,1,2-Trichloroethane	ND	0.020	--	ND	0.109	--		1
1,1-Dichloroethane	ND	0.020	--	ND	0.081	--		1
1,1-Dichloroethene	ND	0.020	--	ND	0.079	--		1
1,2,4-Trimethylbenzene	ND	0.020	--	ND	0.098	--		1
1,2-Dibromoethane	ND	0.020	--	ND	0.154	--		1
1,2-Dichlorobenzene	ND	0.020	--	ND	0.120	--		1
1,2-Dichloroethane	ND	0.020	--	ND	0.081	--		1
1,2-Dichloropropane	ND	0.020	--	ND	0.092	--		1
1,3,5-Trimethybenzene	ND	0.020	--	ND	0.098	--		1
1,3-Butadiene	ND	0.020	--	ND	0.044	--		1
1,3-Dichlorobenzene	ND	0.020	--	ND	0.120	--		1
1,4-Dichlorobenzene	ND	0.020	--	ND	0.120	--		1
1,4-Dioxane	ND	0.100	--	ND	0.360	--		1
Benzene	ND	0.100	--	ND	0.319	--		1
Bromodichloromethane	ND	0.020	--	ND	0.134	--		1
Bromoform	ND	0.020	--	ND	0.206	--		1
Bromomethane	ND	0.020	--	ND	0.078	--		1
Carbon tetrachloride	ND	0.020	--	ND	0.126	--		1
Chlorobenzene	ND	0.020	--	ND	0.092	--		1
Chloroethane	ND	0.020	--	ND	0.053	--		1
Chloroform	ND	0.020	--	ND	0.098	--		1
Chloromethane	ND	0.500	--	ND	2.44	--		1

Project Name:	BATCH CANISTER CERTIFICATION	***Lab Number:***	L1004194
Project Number:	CANISTER QC BAT	***Report Date:***	05/10/10

SAMPLE RESULTS

Lab ID:	L1004194-01	Date Collected:	03/23/10 00:00
Client ID:	CAN 212 SHELF 7	Date Received:	03/23/10
Sample Location:		Field Prep:	Not Specified

	ppbV			ug/m3				
Parameter	**Results**	**RL**	**MDL**	**Results**	**RL**	**MDL**	**Qualifier**	**Dilution Factor**
Volatile Organics in Air by SIM - Mansfield Lab								
cis-1,2-Dichloroethene	ND	0.020	--	ND	0.079	--		1
cis-1,3-Dichloropropene	ND	0.020	--	ND	0.091	--		1
Dibromochloromethane	ND	0.020	--	ND	0.096	--		1
Dichlorodifluoromethane	ND	0.050	--	ND	0.247	--		1
Ethylbenzene	ND	0.020	--	ND	0.087	--		1
Freon-113	ND	0.050	--	ND	0.383	--		1
Freon-114	ND	0.050	--	ND	0.349	--		1
Methylene chloride	ND	0.500	--	ND	1.74	--		1
Methyl tert butyl ether	ND	0.020	--	ND	0.072	--		1
Naphthalene	ND	0.050	--	ND	0.262	--		1
p/m-Xylene	ND	0.040	--	ND	0.174	--		1
o-Xylene	ND	0.020	--	ND	0.087	--		1
Styrene	ND	0.020	--	ND	0.085	--		1
Tetrachloroethene	ND	0.020	--	ND	0.136	--		1
Toluene	ND	0.020	--	ND	0.075	--		1
trans-1,2-Dichloroethene	ND	0.020	--	ND	0.079	--		1
trans-1,3-Dichloropropene	ND	0.020	--	ND	0.091	--		1
Trichloroethene	ND	0.020	--	ND	0.107	--		1
1,2,4-Trichlorobenzene	ND	0.050	--	ND	0.371	--		1
Trichlorofluoromethane	ND	0.050	--	ND	0.281	--		1
Hexachlorobutadiene	ND	0.050	--	ND	0.192	--		1
Vinyl chloride	ND	0.020	--	ND	0.051	--		1
Acrylonitrile	ND	0.500	--	ND	1.08	--		1
n-Butylbenzene	ND	0.500	--	ND	2.74	--		1
sec-Butylbenzene	ND	0.500	--	ND	2.74	--		1
Isopropylbenzene	ND	0.500	--	ND	2.46	--		1
p-Isopropyltoluene	ND	0.500	--	ND	2.74	--		1
Acetone	ND	2.00	--	ND	4.75	--		1

Project Name:	BATCH CANISTER CERTIFICATION	***Lab Number:***	L1004194
Project Number:	CANISTER QC BAT	***Report Date:***	05/10/10

SAMPLE RESULTS

Lab ID:	L1004194-01	Date Collected:	03/23/10 00:00
Client ID:	CAN 212 SHELF 7	Date Received:	03/23/10
Sample Location:		Field Prep:	Not Specified

	ppbV			ug/m3				
Parameter	**Results**	**RL**	**MDL**	**Results**	**RL**	**MDL**	**Qualifier**	**Dilution Factor**
Volatile Organics in Air by SIM - Mansfield Lab								
2-Butanone	ND	0.500	--	ND	1.47	--		1
4-Methyl-2-pentanone	ND	0.500	--	ND	2.05	--		1
Halothane	ND	0.050	--	ND	0.403	--		1
1,2,3-Trichlorobenzene	ND	0.050	--	ND	0.371	--		1

Case Narrative

The samples were received in accordance with the Chain of Custody and no significant deviations were encountered during the preparation or analysis unless otherwise noted. Sample Receipt, Container Information, and the Chain of Custody are located at the back of the report.

Results contained within this report relate only to the samples submitted under this Alpha Lab Number and meet all of the requirements of NELAC, for all NELAC accredited parameters. The data presented in this report is organized by parameter (i.e. VOC, SVOC, etc.). Sample specific Quality Control data (i.e. Surrogate Spike Recovery) is reported at the end of the target analyte list for each individual sample, followed by the Laboratory Batch Quality Control at the end of each parameter. If a sample was re-analyzed or re-extracted due to a required quality control corrective action and if both sets of data are reported, the Laboratory ID of the re-analysis or re-extraction is designated with an "R" or "RE", respectively. When multiple Batch Quality Control elements are reported (e.g. more than one LCS), the associated samples for each element are noted in the grey shaded header line of each data table. Any Laboratory Batch, Sample Specific % recovery or RPD value that is outside the listed Acceptance Criteria is bolded in the report. Definitions of all data qualifiers and acronyms used in this report are provided in the Glossary located at the back of the report.

Please see the associated ADEx data file for a comparison of laboratory reporting limits that were achieved with the regulatory Numerical Standards requested on the Chain of Custody.

For additional information, please contact Client Services at 800-624-9220.

Batch Canister Certification

Volatile Organics in Air (Low Level)
The internal standards were within method criteria.
The WG406899-3 LCS recoveries for 3-Chloropropene (69%), Acrolein (68%), and 2,4,4-Trimethyl-1-pentene (154%) are outside the 70%-130% acceptance limit. The LCS was within overall method allowances, therefore the analysis proceeded.

Volatile Organics in Air (SIM)
The internal standards were within method criteria.
The WG406900-3 LCS recovery for 4-Methyl-2-pentanone (171%) is outside the 70%-130% acceptance limit. All samples associated with this LCS do not have reportable concentrations this compound, therefore the

Case Narrative (continued)

results are reported.

MCP Related Narratives

Petroleum Hydrocarbons in Air

The internal standards were within method criteria.

The WG354290-2 LCS recoveries for Ethylbenzene and o-Xylene are outside the 70%-130% acceptance limit. Associated samples did not have reportable concentrations of either compound, therefore the results were released without qualification per the method.

I, the undersigned, attest under the pains and penalties of perjury that, to the best of my knowledge and belief and based upon my personal inquiry of those responsible for providing the information contained in this analytical report, such information is accurate and complete. This certificate of analysis is not complete unless this page accompanies any and all pages of this report.

Authorized Signature: Kathleen M. O'Brien Kathleen O'Brien

Title: Technical Director/Representative Date: 04/29/10

Project Name:	BATCH CANISTER CERTIFICATION	**Lab Number:**	L1004710
Project Number:	CANISTER QC BAT	**Report Date:**	04/29/10

SAMPLE RESULTS

Lab ID:	L1004710-02	Date Collected:	04/01/10 00:00
Client ID:	CAN 643 SHELF 43	Date Received:	04/01/10
Sample Location:		Field Prep:	Not Specified
Matrix:	Air		
Anaytical Method:	48,TO-15		
Analytical Date:	04/06/10 10:13		
Analyst:	AJ		

	ppbV		ug/m3			
Parameter	**Results**	**RDL**	**Results**	**RDL**	**Qualifier**	**Dilution Factor**
Volatile Organics in Air (Low Level) - Mansfield Lab						
1,1,1-Trichloroethane	ND	0.200	ND	1.09		1
1,1,2,2-Tetrachloroethane	ND	0.200	ND	1.37		1
1,1,2-Trichloroethane	ND	0.200	ND	1.09		1
1,1-Dichloroethane	ND	0.200	ND	0.809		1
1,1-Dichloroethene	ND	0.200	ND	0.792		1
1,2,4-Trichlorobenzene	ND	0.200	ND	1.48		1
1,2,4-Trimethylbenzene	ND	0.200	ND	0.982		1
1,2-Dibromoethane	ND	0.200	ND	1.54		1
1,2-Dichlorobenzene	ND	0.200	ND	1.20		1
1,2-Dichloroethane	ND	0.200	ND	0.809		1
1,2-Dichloropropane	ND	0.200	ND	0.924		1
1,3,5-Trimethybenzene	ND	0.200	ND	0.982		1
1,3-Butadiene	ND	0.200	ND	0.442		1
1,3-Dichlorobenzene	ND	0.200	ND	1.20		1
1,4-Dichlorobenzene	ND	0.200	ND	1.20		1
1,4-Dioxane	ND	0.200	ND	0.720		1
2,2,4-Trimethylpentane	ND	0.200	ND	0.934		1
2-Butanone	ND	0.200	ND	0.589		1
2-Hexanone	ND	0.200	ND	0.819		1
3-Chloropropene	ND	0.200	ND	0.626		1
4-Ethyltoluene	ND	0.200	ND	0.982		1
Acetone	ND	1.00	ND	2.37		1
Benzene	ND	0.200	ND	0.638		1
Benzyl chloride	ND	0.200	ND	1.03		1
Bromodichloromethane	ND	0.200	ND	1.34		1

Project Name: BATCH CANISTER CERTIFICATION
Project Number: CANISTER QC BAT

Lab Number: L1004710
Report Date: 04/29/10

SAMPLE RESULTS

Lab ID: L1004710-02
Client ID: CAN 643 SHELF 43
Sample Location:

Date Collected: 04/01/10 00:00
Date Received: 04/01/10
Field Prep: Not Specified

Parameter	ppbV Results	ppbV RDL	ug/m3 Results	ug/m3 RDL	Qualifier	Dilution Factor
Volatile Organics in Air (Low Level) - Mansfield Lab						
Bromoform	ND	0.200	ND	2.06		1
Bromomethane	ND	0.200	ND	0.776		1
Carbon disulfide	ND	0.200	ND	0.622		1
Carbon tetrachloride	ND	0.200	ND	1.26		1
Chlorobenzene	ND	0.200	ND	0.920		1
Chloroethane	ND	0.200	ND	0.527		1
Chloroform	ND	0.200	ND	0.976		1
Chloromethane	ND	0.200	ND	0.413		1
cis-1,2-Dichloroethene	ND	0.200	ND	0.792		1
cis-1,3-Dichloropropene	ND	0.200	ND	0.907		1
Cyclohexane	ND	0.200	ND	0.688		1
Dibromochloromethane	ND	0.200	ND	1.70		1
Dichlorodifluoromethane	ND	0.200	ND	0.988		1
Ethanol	ND	2.50	ND	4.71		1
Ethyl Acetate	ND	0.500	ND	1.80		1
Ethylbenzene	ND	0.200	ND	0.868		1
Freon-113	ND	0.200	ND	1.53		1
Freon-114	ND	0.200	ND	1.40		1
Hexachlorobutadiene	ND	0.200	ND	2.13		1
Isopropanol	ND	0.500	ND	1.23		1
Methylene chloride	ND	0.500	ND	1.74		1
4-Methyl-2-pentanone	ND	0.200	ND	0.819		1
Methyl tert butyl ether	ND	0.200	ND	0.720		1
p/m-Xylene	ND	0.400	ND	1.74		1
o-Xylene	ND	0.200	ND	0.868		1
Heptane	ND	0.200	ND	0.819		1
n-Hexane	ND	0.200	ND	0.704		1
Propylene	ND	0.200	ND	0.344		1

Project Name:	BATCH CANISTER CERTIFICATION	**Lab Number:**	L1004710
Project Number:	CANISTER QC BAT	**Report Date:**	04/29/10

SAMPLE RESULTS

Lab ID:	L1004710-02	Date Collected:	04/01/10 00:00
Client ID:	CAN 643 SHELF 43	Date Received:	04/01/10
Sample Location:		Field Prep:	Not Specified

Parameter	ppbV Results	ppbV RDL	ug/m3 Results	ug/m3 RDL	Qualifier	Dilution Factor
Volatile Organics in Air (Low Level) - Mansfield Lab						
Styrene	ND	0.200	ND	0.851		1
Tetrachloroethene	ND	0.200	ND	1.36		1
Tetrahydrofuran	ND	0.200	ND	0.589		1
Toluene	ND	0.200	ND	0.753		1
trans-1,2-Dichloroethene	ND	0.200	ND	0.792		1
trans-1,3-Dichloropropene	ND	0.200	ND	0.907		1
Trichloroethene	ND	0.200	ND	1.07		1
Trichlorofluoromethane	ND	0.200	ND	1.12		1
Vinyl acetate	ND	0.200	ND	0.704		1
Vinyl bromide	ND	0.200	ND	0.874		1
Vinyl chloride	ND	0.200	ND	0.511		1
Naphthalene	ND	0.200	ND	1.05		1
Propane	ND	0.200	ND	0.606		1
Acrylonitrile	ND	0.200	ND	0.434		1
Acrolein	ND	0.500	ND	1.14		1
1,1,1,2-Tetrachloroethane	ND	0.200	ND	1.37		1
Isopropylbenzene	ND	0.200	ND	0.982		1
1,2,3-Trichloropropane	ND	0.200	ND	1.20		1
Acetonitrile	ND	0.200	ND	0.336		1
Bromobenzene	ND	0.200	ND	1.28		1
Chlorodifluoromethane	ND	0.200	ND	0.707		1
Dichlorofluoromethane	ND	0.200	ND	0.841		1
Dibromomethane	ND	0.200	ND	1.42		1
Pentane	ND	0.200	ND	0.590		1
Octane	ND	0.200	ND	0.934		1
tert-Amyl Methyl Ether	ND	0.200	ND	0.835		1
2-Chlorotoluene	ND	0.200	ND	1.03		1
4-Chlorotoluene	ND	0.200	ND	1.03		1

Project Name:	BATCH CANISTER CERTIFICATION	**Lab Number:**	L1004710
Project Number:	CANISTER QC BAT	**Report Date:**	04/29/10

SAMPLE RESULTS

Lab ID:	L1004710-02	Date Collected:	04/01/10 00:00
Client ID:	CAN 643 SHELF 43	Date Received:	04/01/10
Sample Location:		Field Prep:	Not Specified

	ppbV		ug/m3			
Parameter	**Results**	**RDL**	**Results**	**RDL**	**Qualifier**	**Dilution Factor**
Volatile Organics in Air (Low Level) - Mansfield Lab						
2,2-Dichloropropane	ND	0.200	ND	0.923		1
1,1-Dichloropropene	ND	0.200	ND	0.907		1
Diisopropyl ether	ND	0.200	ND	0.835		1
tert-Butyl Ethyl Ether	ND	0.200	ND	0.835		1
1,2,3-Trichlorobenzene	ND	0.200	ND	1.48		1
Ethyl ether	ND	0.200	ND	0.606		1
n-Butylbenzene	ND	0.200	ND	1.10		1
sec-Butylbenzene	ND	0.200	ND	1.10		1
tert-Butylbenzene	ND	0.200	ND	1.10		1
1,2-Dibromo-3-chloropropane	ND	0.200	ND	1.93		1
p-Isopropyltoluene	ND	0.200	ND	1.10		1
n-Propylbenzene	ND	0.200	ND	0.982		1
1,3-Dichloropropane	ND	0.200	ND	0.923		1
Butane	ND	0.200	ND	0.475		1
Nonane	ND	0.200	ND	1.05		1
Decane	ND	0.200	ND	1.16		1
Undecane	ND	0.200	ND	1.28		1
Dodecane	ND	0.200	ND	1.39		1
Butyl acetate	ND	0.500	ND	2.37		1
2,4,4-trimethyl-2-pentene	ND	0.500	ND	2.29		1
2,4,4-trimethyl-1-pentene	ND	0.500	ND	2.29		1
Tertiary butyl Alcohol	ND	0.500	ND	1.52		1

Project Name:	BATCH CANISTER CERTIFICATION	**Lab Number:**	L1004710
Project Number:	CANISTER QC BAT	**Report Date:**	04/29/10

SAMPLE RESULTS

Lab ID:	L1004710-02	Date Collected:	04/01/10 00:00
Client ID:	CAN 643 SHELF 43	Date Received:	04/01/10
Sample Location:		Field Prep:	Not Specified
Matrix:	Air		
Anaytical Method:	48,TO-15-SIM		
Analytical Date:	04/06/10 10:13		
Analyst:	AJ		

Parameter	ppbV Results	ppbV RDL	ug/m3 Results	ug/m3 RDL	Qualifier	Dilution Factor
Volatile Organics in Air by SIM - Mansfield Lab						
1,1,1-Trichloroethane	ND	0.020	ND	0.109		1
1,1,1,2-Tetrachloroethane	ND	0.020	ND	0.137		1
1,1,2,2-Tetrachloroethane	ND	0.020	ND	0.137		1
1,1,2-Trichloroethane	ND	0.020	ND	0.109		1
1,1-Dichloroethane	ND	0.020	ND	0.081		1
1,1-Dichloroethene	ND	0.020	ND	0.079		1
1,2,4-Trimethylbenzene	ND	0.020	ND	0.098		1
1,2-Dibromoethane	ND	0.020	ND	0.154		1
1,2-Dichlorobenzene	ND	0.020	ND	0.120		1
1,2-Dichloroethane	ND	0.020	ND	0.081		1
1,2-Dichloropropane	ND	0.020	ND	0.092		1
1,3,5-Trimethybenzene	ND	0.020	ND	0.098		1
1,3-Butadiene	ND	0.020	ND	0.044		1
1,3-Dichlorobenzene	ND	0.020	ND	0.120		1
1,4-Dichlorobenzene	ND	0.020	ND	0.120		1
1,4-Dioxane	ND	0.100	ND	0.360		1
Benzene	ND	0.100	ND	0.319		1
Bromodichloromethane	ND	0.020	ND	0.134		1
Bromoform	ND	0.020	ND	0.206		1
Bromomethane	ND	0.020	ND	0.078		1
Carbon tetrachloride	ND	0.020	ND	0.126		1
Chlorobenzene	ND	0.020	ND	0.092		1
Chloroethane	ND	0.020	ND	0.053		1
Chloroform	ND	0.020	ND	0.098		1
Chloromethane	ND	0.500	ND	2.44		1

Project Name:	BATCH CANISTER CERTIFICATION	**Lab Number:**	L1004710
Project Number:	CANISTER QC BAT	**Report Date:**	04/29/10

SAMPLE RESULTS

Lab ID:	L1004710-02	Date Collected:	04/01/10 00:00
Client ID:	CAN 643 SHELF 43	Date Received:	04/01/10
Sample Location:		Field Prep:	Not Specified

Parameter	ppbV Results	ppbV RDL	ug/m3 Results	ug/m3 RDL	Qualifier	Dilution Factor
Volatile Organics in Air by SIM - Mansfield Lab						
cis-1,2-Dichloroethene	ND	0.020	ND	0.079		1
cis-1,3-Dichloropropene	ND	0.020	ND	0.091		1
Dibromochloromethane	ND	0.020	ND	0.096		1
Dichlorodifluoromethane	ND	0.050	ND	0.247		1
Ethylbenzene	ND	0.020	ND	0.087		1
Freon-113	ND	0.050	ND	0.383		1
Freon-114	ND	0.050	ND	0.349		1
Methylene chloride	ND	0.500	ND	1.74		1
Methyl tert butyl ether	ND	0.020	ND	0.072		1
Naphthalene	ND	0.050	ND	0.262		1
p/m-Xylene	ND	0.040	ND	0.174		1
o-Xylene	ND	0.020	ND	0.087		1
Styrene	ND	0.020	ND	0.085		1
Tetrachloroethene	ND	0.020	ND	0.136		1
Toluene	ND	0.020	ND	0.075		1
trans-1,2-Dichloroethene	ND	0.020	ND	0.079		1
trans-1,3-Dichloropropene	ND	0.020	ND	0.091		1
Trichloroethene	ND	0.020	ND	0.107		1
1,2,4-Trichlorobenzene	ND	0.050	ND	0.371		1
Trichlorofluoromethane	ND	0.050	ND	0.281		1
Hexachlorobutadiene	ND	0.050	ND	0.192		1
Vinyl chloride	ND	0.020	ND	0.051		1
Acrylonitrile	ND	0.500	ND	1.08		1
n-Butylbenzene	ND	0.500	ND	2.74		1
sec-Butylbenzene	ND	0.500	ND	2.74		1
Isopropylbenzene	ND	0.500	ND	2.46		1
p-Isopropyltoluene	ND	0.500	ND	2.74		1
Acetone	ND	2.00	ND	4.75		1

Project Name:	BATCH CANISTER CERTIFICATION	**Lab Number:**	L1004710
Project Number:	CANISTER QC BAT	**Report Date:**	04/29/10

SAMPLE RESULTS

Lab ID:	L1004710-02	Date Collected:	04/01/10 00:00
Client ID:	CAN 643 SHELF 43	Date Received:	04/01/10
Sample Location:		Field Prep:	Not Specified

	ppbV		ug/m3			
Parameter	**Results**	**RDL**	**Results**	**RDL**	**Qualifier**	**Dilution Factor**
Volatile Organics in Air by SIM - Mansfield Lab						
2-Butanone	ND	0.500	ND	1.47		1
4-Methyl-2-pentanone	ND	0.500	ND	2.05		1
Halothane	ND	0.050	ND	0.403		1
1,2,3-Trichlorobenzene	ND	0.050	ND	0.371		1

Project Name:	BATCH CANISTER CERTIFICATION	**Lab Number:**	L1005023
Project Number:	CANISTER QC BAT	**Report Date:**	04/27/10

Case Narrative

The samples were received in accordance with the Chain of Custody and no significant deviations were encountered during the preparation or analysis unless otherwise noted. Sample Receipt, Container Information, and the Chain of Custody are located at the back of the report.

Results contained within this report relate only to the samples submitted under this Alpha Lab Number and meet all of the requirements of NELAC, for all NELAC accredited parameters. The data presented in this report is organized by parameter (i.e. VOC, SVOC, etc.). Sample specific Quality Control data (i.e. Surrogate Spike Recovery) is reported at the end of the target analyte list for each individual sample, followed by the Laboratory Batch Quality Control at the end of each parameter. If a sample was re-analyzed or re-extracted due to a required quality control corrective action and if both sets of data are reported, the Laboratory ID of the re-analysis or re-extraction is designated with an "R" or "RE", respectively. When multiple Batch Quality Control elements are reported (e.g. more than one LCS), the associated samples for each element are noted in the grey shaded header line of each data table. Any Laboratory Batch, Sample Specific % recovery or RPD value that is outside the listed Acceptance Criteria is bolded in the report. Definitions of all data qualifiers and acronyms used in this report are provided in the Glossary located at the back of the report.

Please see the associated ADEx data file for a comparison of laboratory reporting limits that were achieved with the regulatory Numerical Standards requested on the Chain of Custody.

For additional information, please contact Client Services at 800-624-9220.

Batch Canister Certification

Volatile Organics in Air (Low Level)

The WG407354-3 LCS recoveries for 1,2,3-Trichlorobenzene (132%) and Dodecane (c12) (137%) are outside the 70%-130% acceptance limit. The LCS was within overall method allowances, therefore the analysis proceeded.

Volatile Organics in Air (SIM)

The WG407158-3 LCS recoveries for Methyl tert butyl ether (68%) and trans-1,3-Dichloropropene (68%) are outside the 70%-130% acceptance limit. The LCS was within overall method allowances, therefore the analysis proceeded.

Project Name:	BATCH CANISTER CERTIFICATION	**Lab Number:**	L1005023
Project Number:	CANISTER QC BAT	**Report Date:**	04/27/10

SAMPLE RESULTS

Lab ID:	L1005023-01	Date Collected:	04/06/10 00:00
Client ID:	CAN 1521 SHELF 51	Date Received:	04/06/10
Sample Location:		Field Prep:	Not Specified
Matrix:	Air		
Anaytical Method:	48,TO-15		
Analytical Date:	04/08/10 19:15		
Analyst:	RY		

	ppbV		ug/m3			
Parameter	**Results**	**RDL**	**Results**	**RDL**	**Qualifier**	**Dilution Factor**
Volatile Organics in Air (Low Level) - Mansfield Lab						
1,1,1-Trichloroethane	ND	0.200	ND	1.09		1
1,1,2,2-Tetrachloroethane	ND	0.200	ND	1.37		1
1,1,2-Trichloroethane	ND	0.200	ND	1.09		1
1,1-Dichloroethane	ND	0.200	ND	0.809		1
1,1-Dichloroethene	ND	0.200	ND	0.792		1
1,2,4-Trichlorobenzene	ND	0.200	ND	1.48		1
1,2,4-Trimethylbenzene	ND	0.200	ND	0.982		1
1,2-Dibromoethane	ND	0.200	ND	1.54		1
1,2-Dichlorobenzene	ND	0.200	ND	1.20		1
1,2-Dichloroethane	ND	0.200	ND	0.809		1
1,2-Dichloropropane	ND	0.200	ND	0.924		1
1,3,5-Trimethybenzene	ND	0.200	ND	0.982		1
1,3-Butadiene	ND	0.200	ND	0.442		1
1,3-Dichlorobenzene	ND	0.200	ND	1.20		1
1,4-Dichlorobenzene	ND	0.200	ND	1.20		1
1,4-Dioxane	ND	0.200	ND	0.720		1
2,2,4-Trimethylpentane	ND	0.200	ND	0.934		1
2-Butanone	ND	0.200	ND	0.589		1
2-Hexanone	ND	0.200	ND	0.819		1
3-Chloropropene	ND	0.200	ND	0.626		1
4-Ethyltoluene	ND	0.200	ND	0.982		1
Acetone	ND	1.00	ND	2.37		1
Benzene	ND	0.200	ND	0.638		1
Benzyl chloride	ND	0.200	ND	1.03		1
Bromodichloromethane	ND	0.200	ND	1.34		1

Project Name:	BATCH CANISTER CERTIFICATION	**Lab Number:**	L1005023
Project Number:	CANISTER QC BAT	**Report Date:**	04/27/10

SAMPLE RESULTS

Lab ID:	L1005023-01	Date Collected:	04/06/10 00:00
Client ID:	CAN 1521 SHELF 51	Date Received:	04/06/10
Sample Location:		Field Prep:	Not Specified

Parameter	ppbV Results	ppbV RDL	ug/m3 Results	ug/m3 RDL	Qualifier	Dilution Factor
Volatile Organics in Air (Low Level) - Mansfield Lab						
Bromoform	ND	0.200	ND	2.06		1
Bromomethane	ND	0.200	ND	0.776		1
Carbon disulfide	ND	0.200	ND	0.622		1
Carbon tetrachloride	ND	0.200	ND	1.26		1
Chlorobenzene	ND	0.200	ND	0.920		1
Chloroethane	ND	0.200	ND	0.527		1
Chloroform	ND	0.200	ND	0.976		1
Chloromethane	ND	0.200	ND	0.413		1
cis-1,2-Dichloroethene	ND	0.200	ND	0.792		1
cis-1,3-Dichloropropene	ND	0.200	ND	0.907		1
Cyclohexane	ND	0.200	ND	0.688		1
Dibromochloromethane	ND	0.200	ND	1.70		1
Dichlorodifluoromethane	ND	0.200	ND	0.988		1
Ethanol	ND	2.50	ND	4.71		1
Ethyl Acetate	ND	0.500	ND	1.80		1
Ethylbenzene	ND	0.200	ND	0.868		1
Freon-113	ND	0.200	ND	1.53		1
Freon-114	ND	0.200	ND	1.40		1
Hexachlorobutadiene	ND	0.200	ND	2.13		1
Isopropanol	ND	0.500	ND	1.23		1
Methylene chloride	ND	0.500	ND	1.74		1
4-Methyl-2-pentanone	ND	0.200	ND	0.819		1
Methyl tert butyl ether	ND	0.200	ND	0.720		1
p/m-Xylene	ND	0.400	ND	1.74		1
o-Xylene	ND	0.200	ND	0.868		1
Heptane	ND	0.200	ND	0.819		1
n-Hexane	ND	0.200	ND	0.704		1
Propylene	ND	0.200	ND	0.344		1

Project Name:	BATCH CANISTER CERTIFICATION	**Lab Number:**	L1005023
Project Number:	CANISTER QC BAT	**Report Date:**	04/27/10

SAMPLE RESULTS

Lab ID:	L1005023-01	Date Collected:	04/06/10 00:00
Client ID:	CAN 1521 SHELF 51	Date Received:	04/06/10
Sample Location:		Field Prep:	Not Specified

	ppbV		ug/m3			
Parameter	**Results**	**RDL**	**Results**	**RDL**	**Qualifier**	**Dilution Factor**
Volatile Organics in Air (Low Level) - Mansfield Lab						
Styrene	ND	0.200	ND	0.851		1
Tetrachloroethene	ND	0.200	ND	1.36		1
Tetrahydrofuran	ND	0.200	ND	0.589		1
Toluene	ND	0.200	ND	0.753		1
trans-1,2-Dichloroethene	ND	0.200	ND	0.792		1
trans-1,3-Dichloropropene	ND	0.200	ND	0.907		1
Trichloroethene	ND	0.200	ND	1.07		1
Trichlorofluoromethane	ND	0.200	ND	1.12		1
Vinyl acetate	ND	0.200	ND	0.704		1
Vinyl bromide	ND	0.200	ND	0.874		1
Vinyl chloride	ND	0.200	ND	0.511		1
Naphthalene	ND	0.200	ND	1.05		1
Propane	ND	0.200	ND	0.606		1
Acrylonitrile	ND	0.200	ND	0.434		1
Acrolein	ND	0.500	ND	1.14		1
1,1,1,2-Tetrachloroethane	ND	0.200	ND	1.37		1
Isopropylbenzene	ND	0.200	ND	0.982		1
1,2,3-Trichloropropane	ND	0.200	ND	1.20		1
Acetonitrile	ND	0.200	ND	0.336		1
Bromobenzene	ND	0.200	ND	1.28		1
Chlorodifluoromethane	ND	0.200	ND	0.707		1
Dichlorofluoromethane	ND	0.200	ND	0.841		1
Dibromomethane	ND	0.200	ND	1.42		1
Pentane	ND	0.200	ND	0.590		1
Octane	ND	0.200	ND	0.934		1
tert-Amyl Methyl Ether	ND	0.200	ND	0.835		1
2-Chlorotoluene	ND	0.200	ND	1.03		1
4-Chlorotoluene	ND	0.200	ND	1.03		1

Project Name:	BATCH CANISTER CERTIFICATION	**Lab Number:**	L1005023
Project Number:	CANISTER QC BAT	**Report Date:**	04/27/10

SAMPLE RESULTS

Lab ID:	L1005023-01	Date Collected:	04/06/10 00:00
Client ID:	CAN 1521 SHELF 51	Date Received:	04/06/10
Sample Location:		Field Prep:	Not Specified

Parameter	ppbV Results	ppbV RDL	ug/m3 Results	ug/m3 RDL	Qualifier	Dilution Factor
Volatile Organics in Air (Low Level) - Mansfield Lab						
2,2-Dichloropropane	ND	0.200	ND	0.923		1
1,1-Dichloropropene	ND	0.200	ND	0.907		1
Diisopropyl ether	ND	0.200	ND	0.835		1
tert-Butyl Ethyl Ether	ND	0.200	ND	0.835		1
1,2,3-Trichlorobenzene	ND	0.200	ND	1.48		1
Ethyl ether	ND	0.200	ND	0.606		1
n-Butylbenzene	ND	0.200	ND	1.10		1
sec-Butylbenzene	ND	0.200	ND	1.10		1
tert-Butylbenzene	ND	0.200	ND	1.10		1
1,2-Dibromo-3-chloropropane	ND	0.200	ND	1.93		1
p-Isopropyltoluene	ND	0.200	ND	1.10		1
n-Propylbenzene	ND	0.200	ND	0.982		1
1,3-Dichloropropane	ND	0.200	ND	0.923		1
Methanol	ND	5.00	ND	6.55		1
Butane	ND	0.200	ND	0.475		1
Nonane	ND	0.200	ND	1.05		1
Decane	ND	0.200	ND	1.16		1
Undecane	ND	0.200	ND	1.28		1
Dodecane	ND	0.200	ND	1.39		1
Butyl acetate	ND	0.500	ND	2.37		1
2,4,4-trimethyl-2-pentene	ND	0.500	ND	2.29		1
2,4,4-trimethyl-1-pentene	ND	0.500	ND	2.29		1
Tertiary butyl Alcohol	ND	0.500	ND	1.52		1

Project Name:	BATCH CANISTER CERTIFICATION	**Lab Number:**	L1005023
Project Number:	CANISTER QC BAT	**Report Date:**	04/27/10

SAMPLE RESULTS

Lab ID:	L1005023-01	Date Collected:	04/06/10 00:00
Client ID:	CAN 1521 SHELF 51	Date Received:	04/06/10
Sample Location:		Field Prep:	Not Specified
Matrix:	Air		
Anaytical Method:	48,TO-15-SIM		
Analytical Date:	04/08/10 19:15		
Analyst:	RY		

	ppbV		ug/m3			
Parameter	**Results**	**RDL**	**Results**	**RDL**	**Qualifier**	**Dilution Factor**
Volatile Organics in Air by SIM - Mansfield Lab						
1,1,1-Trichloroethane	ND	0.020	ND	0.109		1
1,1,1,2-Tetrachloroethane	ND	0.020	ND	0.137		1
1,1,2,2-Tetrachloroethane	ND	0.020	ND	0.137		1
1,1,2-Trichloroethane	ND	0.020	ND	0.109		1
1,1-Dichloroethane	ND	0.020	ND	0.081		1
1,1-Dichloroethene	ND	0.020	ND	0.079		1
1,2,4-Trimethylbenzene	ND	0.020	ND	0.098		1
1,2-Dibromoethane	ND	0.020	ND	0.154		1
1,2-Dichlorobenzene	ND	0.020	ND	0.120		1
1,2-Dichloroethane	ND	0.020	ND	0.081		1
1,2-Dichloropropane	ND	0.020	ND	0.092		1
1,3,5-Trimethybenzene	ND	0.020	ND	0.098		1
1,3-Butadiene	ND	0.020	ND	0.044		1
1,3-Dichlorobenzene	ND	0.020	ND	0.120		1
1,4-Dichlorobenzene	ND	0.020	ND	0.120		1
1,4-Dioxane	ND	0.100	ND	0.360		1
Benzene	ND	0.100	ND	0.319		1
Bromodichloromethane	ND	0.020	ND	0.134		1
Bromoform	ND	0.020	ND	0.206		1
Bromomethane	ND	0.020	ND	0.078		1
Carbon tetrachloride	ND	0.020	ND	0.126		1
Chlorobenzene	ND	0.020	ND	0.092		1
Chloroethane	ND	0.020	ND	0.053		1
Chloroform	ND	0.020	ND	0.098		1
Chloromethane	ND	0.500	ND	2.44		1

Project Name:	BATCH CANISTER CERTIFICATION	**Lab Number:**	L1005023
Project Number:	CANISTER QC BAT	**Report Date:**	04/27/10

SAMPLE RESULTS

Lab ID:	L1005023-01	Date Collected:	04/06/10 00:00
Client ID:	CAN 1521 SHELF 51	Date Received:	04/06/10
Sample Location:		Field Prep:	Not Specified

Parameter	ppbV Results	ppbV RDL	ug/m3 Results	ug/m3 RDL	Qualifier	Dilution Factor
Volatile Organics in Air by SIM - Mansfield Lab						
cis-1,2-Dichloroethene	ND	0.020	ND	0.079		1
cis-1,3-Dichloropropene	ND	0.020	ND	0.091		1
Dibromochloromethane	ND	0.020	ND	0.096		1
Dichlorodifluoromethane	ND	0.050	ND	0.247		1
Ethylbenzene	ND	0.020	ND	0.087		1
Freon-113	ND	0.050	ND	0.383		1
Freon-114	ND	0.050	ND	0.349		1
Methylene chloride	ND	0.500	ND	1.74		1
Methyl tert butyl ether	ND	0.020	ND	0.072		1
Naphthalene	ND	0.050	ND	0.262		1
p/m-Xylene	ND	0.040	ND	0.174		1
o-Xylene	ND	0.020	ND	0.087		1
Styrene	ND	0.020	ND	0.085		1
Tetrachloroethene	ND	0.020	ND	0.136		1
Toluene	ND	0.020	ND	0.075		1
trans-1,2-Dichloroethene	ND	0.020	ND	0.079		1
trans-1,3-Dichloropropene	ND	0.020	ND	0.091		1
Trichloroethene	ND	0.020	ND	0.107		1
1,2,4-Trichlorobenzene	ND	0.050	ND	0.371		1
Trichlorofluoromethane	ND	0.050	ND	0.281		1
Hexachlorobutadiene	ND	0.050	ND	0.192		1
Vinyl chloride	ND	0.020	ND	0.051		1
Acrylonitrile	ND	0.500	ND	1.08		1
n-Butylbenzene	ND	0.500	ND	2.74		1
sec-Butylbenzene	ND	0.500	ND	2.74		1
Isopropylbenzene	ND	0.500	ND	2.46		1
p-Isopropyltoluene	ND	0.500	ND	2.74		1
Acetone	ND	2.00	ND	4.75		1

Project Name:	BATCH CANISTER CERTIFICATION	**Lab Number:**	L1005023
Project Number:	CANISTER QC BAT	**Report Date:**	04/27/10

SAMPLE RESULTS

Lab ID:	L1005023-01	Date Collected:	04/06/10 00:00
Client ID:	CAN 1521 SHELF 51	Date Received:	04/06/10
Sample Location:		Field Prep:	Not Specified

	ppbV		ug/m3			
Parameter	**Results**	**RDL**	**Results**	**RDL**	**Qualifier**	**Dilution Factor**
Volatile Organics in Air by SIM - Mansfield Lab						
2-Butanone	ND	0.500	ND	1.47		1
4-Methyl-2-pentanone	ND	0.500	ND	2.05		1
Halothane	ND	0.050	ND	0.403		1
1,2,3-Trichlorobenzene	ND	0.050	ND	0.371		1

Project Name:	BATCH CANISTER CERTIFICATION	**Lab Number:**	L1004810
Project Number:	CANISTER QC BAT	**Report Date:**	05/10/10

Case Narrative

The samples were received in accordance with the Chain of Custody and no significant deviations were encountered during the preparation or analysis unless otherwise noted. Sample Receipt, Container Information, and the Chain of Custody are located at the back of the report.

Results contained within this report relate only to the samples submitted under this Alpha Lab Number and meet all of the requirements of NELAC, for all NELAC accredited parameters. The data presented in this report is organized by parameter (i.e. VOC, SVOC, etc.). Sample specific Quality Control data (i.e. Surrogate Spike Recovery) is reported at the end of the target analyte list for each individual sample, followed by the Laboratory Batch Quality Control at the end of each parameter. If a sample was re-analyzed or re-extracted due to a required quality control corrective action and if both sets of data are reported, the Laboratory ID of the re-analysis or re-extraction is designated with an "R" or "RE", respectively. When multiple Batch Quality Control elements are reported (e.g. more than one LCS), the associated samples for each element are noted in the grey shaded header line of each data table. Any Laboratory Batch, Sample Specific % recovery or RPD value that is outside the listed Acceptance Criteria is bolded in the report. Definitions of all data qualifiers and acronyms used in this report are provided in the Glossary located at the back of the report.

Please see the associated ADEx data file for a comparison of laboratory reporting limits that were achieved with the regulatory Numerical Standards requested on the Chain of Custody.

For additional information, please contact Client Services at 800-624-9220.

Batch Canister Certification

Volatile Organics in Air (SIM)

The WG407069-3 LCS recoveries for Methyl tert butyl ether (69%) and trans-1,3-Dichloropropene (62%) are outside the 70%-130% acceptance limit. The LCS was within overall method allowances, therefore the analysis proceeded.

MCP Related Narratives

Petroleum Hydrocarbons in Air

All MCP required questions were answered with affirmative responses; therefore, there are no relevant data issues to discuss.

Project Name:	BATCH CANISTER CERTIFICATION	***Lab Number:***	L1004810
Project Number:	CANISTER QC BAT	***Report Date:***	05/10/10

SAMPLE RESULTS

Lab ID:	L1004810-02	Date Collected:	04/02/10 00:00
Client ID:	CAN 623 SHELF 57	Date Received:	04/02/10
Sample Location:		Field Prep:	Not Specified
Matrix:	Air		
Anaytical Method:	48,TO-15		
Analytical Date:	04/07/10 18:34		
Analyst:	RY		

	ppbV			ug/m3				
Parameter	**Results**	**RL**	**MDL**	**Results**	**RL**	**MDL**	**Qualifier**	**Dilution Factor**
Volatile Organics in Air (Low Level) - Mansfield Lab								
1,1,1-Trichloroethane	ND	0.200	--	ND	1.09	--		1
1,1,2,2-Tetrachloroethane	ND	0.200	--	ND	1.37	--		1
1,1,2-Trichloroethane	ND	0.200	--	ND	1.09	--		1
1,1-Dichloroethane	ND	0.200	--	ND	0.809	--		1
1,1-Dichloroethene	ND	0.200	--	ND	0.792	--		1
1,2,4-Trichlorobenzene	ND	0.200	--	ND	1.48	--		1
1,2,4-Trimethylbenzene	ND	0.200	--	ND	0.982	--		1
1,2-Dibromoethane	ND	0.200	--	ND	1.54	--		1
1,2-Dichlorobenzene	ND	0.200	--	ND	1.20	--		1
1,2-Dichloroethane	ND	0.200	--	ND	0.809	--		1
1,2-Dichloropropane	ND	0.200	--	ND	0.924	--		1
1,3,5-Trimethybenzene	ND	0.200	--	ND	0.982	--		1
1,3-Butadiene	ND	0.200	--	ND	0.442	--		1
1,3-Dichlorobenzene	ND	0.200	--	ND	1.20	--		1
1,4-Dichlorobenzene	ND	0.200	--	ND	1.20	--		1
1,4-Dioxane	ND	0.200	--	ND	0.720	--		1
2,2,4-Trimethylpentane	ND	0.200	--	ND	0.934	--		1
2-Butanone	ND	0.200	--	ND	0.589	--		1
2-Hexanone	ND	0.200	--	ND	0.819	--		1
3-Chloropropene	ND	0.200	--	ND	0.626	--		1
4-Ethyltoluene	ND	0.200	--	ND	0.982	--		1
Acetone	ND	1.00	--	ND	2.37	--		1
Benzene	ND	0.200	--	ND	0.638	--		1
Benzyl chloride	ND	0.200	--	ND	1.03	--		1
Bromodichloromethane	ND	0.200	--	ND	1.34	--		1

Project Name:	BATCH CANISTER CERTIFICATION	***Lab Number:***	L1004810
Project Number:	CANISTER QC BAT	***Report Date:***	05/10/10

SAMPLE RESULTS

Lab ID:	L1004810-02	Date Collected:	04/02/10 00:00
Client ID:	CAN 623 SHELF 57	Date Received:	04/02/10
Sample Location:		Field Prep:	Not Specified

	ppbV			ug/m3				
Parameter	**Results**	**RL**	**MDL**	**Results**	**RL**	**MDL**	**Qualifier**	**Dilution Factor**
Volatile Organics in Air (Low Level) - Mansfield Lab								
Bromoform	ND	0.200	--	ND	2.06	--		1
Bromomethane	ND	0.200	--	ND	0.776	--		1
Carbon disulfide	ND	0.200	--	ND	0.622	--		1
Carbon tetrachloride	ND	0.200	--	ND	1.26	--		1
Chlorobenzene	ND	0.200	--	ND	0.920	--		1
Chloroethane	ND	0.200	--	ND	0.527	--		1
Chloroform	ND	0.200	--	ND	0.976	--		1
Chloromethane	ND	0.200	--	ND	0.413	--		1
cis-1,2-Dichloroethene	ND	0.200	--	ND	0.792	--		1
cis-1,3-Dichloropropene	ND	0.200	--	ND	0.907	--		1
Cyclohexane	ND	0.200	--	ND	0.688	--		1
Dibromochloromethane	ND	0.200	--	ND	1.70	--		1
Dichlorodifluoromethane	ND	0.200	--	ND	0.988	--		1
Ethanol	ND	2.50	--	ND	4.71	--		1
Ethyl Acetate	ND	0.500	--	ND	1.80	--		1
Ethylbenzene	ND	0.200	--	ND	0.868	--		1
Freon-113	ND	0.200	--	ND	1.53	--		1
Freon-114	ND	0.200	--	ND	1.40	--		1
Hexachlorobutadiene	ND	0.200	--	ND	2.13	--		1
Isopropanol	ND	0.500	--	ND	1.23	--		1
Methylene chloride	ND	0.500	--	ND	1.74	--		1
4-Methyl-2-pentanone	ND	0.200	--	ND	0.819	--		1
Methyl tert butyl ether	ND	0.200	--	ND	0.720	--		1
p/m-Xylene	ND	0.400	--	ND	1.74	--		1
o-Xylene	ND	0.200	--	ND	0.868	--		1
Heptane	ND	0.200	--	ND	0.819	--		1
n-Hexane	ND	0.200	--	ND	0.704	--		1
Propylene	ND	0.200	--	ND	0.344	--		1

Project Name: BATCH CANISTER CERTIFICATION **Lab Number:** L1004810

Project Number: CANISTER QC BAT **Report Date:** 05/10/10

SAMPLE RESULTS

Lab ID: L1004810-02 Date Collected: 04/02/10 00:00

Client ID: CAN 623 SHELF 57 Date Received: 04/02/10

Sample Location: Field Prep: Not Specified

Parameter	ppbV Results	ppbV RL	ppbV MDL	ug/m3 Results	ug/m3 RL	ug/m3 MDL	Qualifier	Dilution Factor
Volatile Organics in Air (Low Level) - Mansfield Lab								
Styrene	ND	0.200	--	ND	0.851	--		1
Tetrachloroethene	ND	0.200	--	ND	1.36	--		1
Tetrahydrofuran	ND	0.200	--	ND	0.589	--		1
Toluene	ND	0.200	--	ND	0.753	--		1
trans-1,2-Dichloroethene	ND	0.200	--	ND	0.792	--		1
trans-1,3-Dichloropropene	ND	0.200	--	ND	0.907	--		1
Trichloroethene	ND	0.200	--	ND	1.07	--		1
Trichlorofluoromethane	ND	0.200	--	ND	1.12	--		1
Vinyl acetate	ND	0.200	--	ND	0.704	--		1
Vinyl bromide	ND	0.200	--	ND	0.874	--		1
Vinyl chloride	ND	0.200	--	ND	0.511	--		1
Naphthalene	ND	0.200	--	ND	1.05	--		1
Propane	ND	0.200	--	ND	0.606	--		1
Acrylonitrile	ND	0.200	--	ND	0.434	--		1
Acrolein	ND	0.500	--	ND	1.14	--		1
1,1,1,2-Tetrachloroethane	ND	0.200	--	ND	1.37	--		1
Isopropylbenzene	ND	0.200	--	ND	0.982	--		1
1,2,3-Trichloropropane	ND	0.200	--	ND	1.20	--		1
Acetonitrile	ND	0.200	--	ND	0.336	--		1
Bromobenzene	ND	0.200	--	ND	1.28	--		1
Chlorodifluoromethane	ND	0.200	--	ND	0.707	--		1
Dichlorofluoromethane	ND	0.200	--	ND	0.841	--		1
Dibromomethane	ND	0.200	--	ND	1.42	--		1
Pentane	ND	0.200	--	ND	0.590	--		1
Octane	ND	0.200	--	ND	0.934	--		1
tert-Amyl Methyl Ether	ND	0.200	--	ND	0.835	--		1
2-Chlorotoluene	ND	0.200	--	ND	1.03	--		1
4-Chlorotoluene	ND	0.200	--	ND	1.03	--		1

Project Name:	BATCH CANISTER CERTIFICATION	***Lab Number:***	L1004810
Project Number:	CANISTER QC BAT	***Report Date:***	05/10/10

SAMPLE RESULTS

Lab ID:	L1004810-02	Date Collected:	04/02/10 00:00
Client ID:	CAN 623 SHELF 57	Date Received:	04/02/10
Sample Location:		Field Prep:	Not Specified

	ppbV			ug/m3				
Parameter	**Results**	**RL**	**MDL**	**Results**	**RL**	**MDL**	**Qualifier**	**Dilution Factor**
Volatile Organics in Air (Low Level) - Mansfield Lab								
2,2-Dichloropropane	ND	0.200	--	ND	0.923	--		1
1,1-Dichloropropene	ND	0.200	--	ND	0.907	--		1
Diisopropyl ether	ND	0.200	--	ND	0.835	--		1
tert-Butyl Ethyl Ether	ND	0.200	--	ND	0.835	--		1
1,2,3-Trichlorobenzene	ND	0.200	--	ND	1.48	--		1
Ethyl ether	ND	0.200	--	ND	0.606	--		1
n-Butylbenzene	ND	0.200	--	ND	1.10	--		1
sec-Butylbenzene	ND	0.200	--	ND	1.10	--		1
tert-Butylbenzene	ND	0.200	--	ND	1.10	--		1
1,2-Dibromo-3-chloropropane	ND	0.200	--	ND	1.93	--		1
p-Isopropyltoluene	ND	0.200	--	ND	1.10	--		1
n-Propylbenzene	ND	0.200	--	ND	0.982	--		1
1,3-Dichloropropane	ND	0.200	--	ND	0.923	--		1
Methanol	ND	5.00	--	ND	6.55	--		1
Butane	ND	0.200	--	ND	0.475	--		1
Nonane	ND	0.200	--	ND	1.05	--		1
Decane	ND	0.200	--	ND	1.16	--		1
Undecane	ND	0.200	--	ND	1.28	--		1
Dodecane	ND	0.200	--	ND	1.39	--		1
Butyl acetate	ND	0.500	--	ND	2.37	--		1
2,4,4-trimethyl-2-pentene	ND	0.500	--	ND	2.29	--		1
2,4,4-trimethyl-1-pentene	ND	0.500	--	ND	2.29	--		1
Tertiary butyl Alcohol	ND	0.500	--	ND	1.52	--		1

Project Name: BATCH CANISTER CERTIFICATION **Lab Number:** L1004810
Project Number: CANISTER QC BAT **Report Date:** 05/10/10

SAMPLE RESULTS

Lab ID: L1004810-02
Client ID: CAN 623 SHELF 57
Sample Location:
Matrix: Air
Anaytical Method: 48,TO-15-SIM
Analytical Date: 04/07/10 18:34
Analyst: RY

Date Collected: 04/02/10 00:00
Date Received: 04/02/10
Field Prep: Not Specified

Parameter	ppbV Results	ppbV RL	ppbV MDL	ug/m3 Results	ug/m3 RL	ug/m3 MDL	Qualifier	Dilution Factor
Volatile Organics in Air by SIM - Mansfield Lab								
1,1,1-Trichloroethane	ND	0.020	--	ND	0.109	--		1
1,1,1,2-Tetrachloroethane	ND	0.020	--	ND	0.137	--		1
1,1,2,2-Tetrachloroethane	ND	0.020	--	ND	0.137	--		1
1,1,2-Trichloroethane	ND	0.020	--	ND	0.109	--		1
1,1-Dichloroethane	ND	0.020	--	ND	0.081	--		1
1,1-Dichloroethene	ND	0.020	--	ND	0.079	--		1
1,2,4-Trimethylbenzene	ND	0.020	--	ND	0.098	--		1
1,2-Dibromoethane	ND	0.020	--	ND	0.154	--		1
1,2-Dichlorobenzene	ND	0.020	--	ND	0.120	--		1
1,2-Dichloroethane	ND	0.020	--	ND	0.081	--		1
1,2-Dichloropropane	ND	0.020	--	ND	0.092	--		1
1,3,5-Trimethybenzene	ND	0.020	--	ND	0.098	--		1
1,3-Butadiene	ND	0.020	--	ND	0.044	--		1
1,3-Dichlorobenzene	ND	0.020	--	ND	0.120	--		1
1,4-Dichlorobenzene	ND	0.020	--	ND	0.120	--		1
1,4-Dioxane	ND	0.100	--	ND	0.360	--		1
Benzene	ND	0.100	--	ND	0.319	--		1
Bromodichloromethane	ND	0.020	--	ND	0.134	--		1
Bromoform	ND	0.020	--	ND	0.206	--		1
Bromomethane	ND	0.020	--	ND	0.078	--		1
Carbon tetrachloride	ND	0.020	--	ND	0.126	--		1
Chlorobenzene	ND	0.020	--	ND	0.092	--		1
Chloroethane	ND	0.020	--	ND	0.053	--		1
Chloroform	ND	0.020	--	ND	0.098	--		1
Chloromethane	ND	0.500	--	ND	2.44	--		1

Project Name:	BATCH CANISTER CERTIFICATION	***Lab Number:***	L1004810
Project Number:	CANISTER QC BAT	***Report Date:***	05/10/10

SAMPLE RESULTS

Lab ID:	L1004810-02	Date Collected:	04/02/10 00:00
Client ID:	CAN 623 SHELF 57	Date Received:	04/02/10
Sample Location:		Field Prep:	Not Specified

	ppbV			ug/m3				
Parameter	**Results**	**RL**	**MDL**	**Results**	**RL**	**MDL**	**Qualifier**	**Dilution Factor**
Volatile Organics in Air by SIM - Mansfield Lab								
cis-1,2-Dichloroethene	ND	0.020	--	ND	0.079	--		1
cis-1,3-Dichloropropene	ND	0.020	--	ND	0.091	--		1
Dibromochloromethane	ND	0.020	--	ND	0.096	--		1
Dichlorodifluoromethane	ND	0.050	--	ND	0.247	--		1
Ethylbenzene	ND	0.020	--	ND	0.087	--		1
Freon-113	ND	0.050	--	ND	0.383	--		1
Freon-114	ND	0.050	--	ND	0.349	--		1
Methylene chloride	ND	0.500	--	ND	1.74	--		1
Methyl tert butyl ether	ND	0.020	--	ND	0.072	--		1
Naphthalene	ND	0.050	--	ND	0.262	--		1
p/m-Xylene	ND	0.040	--	ND	0.174	--		1
o-Xylene	ND	0.020	--	ND	0.087	--		1
Styrene	ND	0.020	--	ND	0.085	--		1
Tetrachloroethene	ND	0.020	--	ND	0.136	--		1
Toluene	ND	0.020	--	ND	0.075	--		1
trans-1,2-Dichloroethene	ND	0.020	--	ND	0.079	--		1
trans-1,3-Dichloropropene	ND	0.020	--	ND	0.091	--		1
Trichloroethene	ND	0.020	--	ND	0.107	--		1
1,2,4-Trichlorobenzene	ND	0.050	--	ND	0.371	--		1
Trichlorofluoromethane	ND	0.050	--	ND	0.281	--		1
Hexachlorobutadiene	ND	0.050	--	ND	0.192	--		1
Vinyl chloride	ND	0.020	--	ND	0.051	--		1
Acrylonitrile	ND	0.500	--	ND	1.08	--		1
n-Butylbenzene	ND	0.500	--	ND	2.74	--		1
sec-Butylbenzene	ND	0.500	--	ND	2.74	--		1
Isopropylbenzene	ND	0.500	--	ND	2.46	--		1
p-Isopropyltoluene	ND	0.500	--	ND	2.74	--		1
Acetone	ND	2.00	--	ND	4.75	--		1

Project Name:	BATCH CANISTER CERTIFICATION	***Lab Number:***	L1004810
Project Number:	CANISTER QC BAT	***Report Date:***	05/10/10

SAMPLE RESULTS

Lab ID:	L1004810-02	Date Collected:	04/02/10 00:00
Client ID:	CAN 623 SHELF 57	Date Received:	04/02/10
Sample Location:		Field Prep:	Not Specified

	ppbV			ug/m3				
Parameter	**Results**	**RL**	**MDL**	**Results**	**RL**	**MDL**	**Qualifier**	**Dilution Factor**
Volatile Organics in Air by SIM - Mansfield Lab								
2-Butanone	ND	0.500	--	ND	1.47	--		1
4-Methyl-2-pentanone	ND	0.500	--	ND	2.05	--		1
Halothane	ND	0.050	--	ND	0.403	--		1
1,2,3-Trichlorobenzene	ND	0.050	--	ND	0.371	--		1

Project Name:	BATCH CANISTER CERTIFICATION	**Lab Number:**	L1005024
Project Number:	CANISTER QC BAT	**Report Date:**	05/10/10

Case Narrative

The samples were received in accordance with the Chain of Custody and no significant deviations were encountered during the preparation or analysis unless otherwise noted. Sample Receipt, Container Information, and the Chain of Custody are located at the back of the report.

Results contained within this report relate only to the samples submitted under this Alpha Lab Number and meet all of the requirements of NELAC, for all NELAC accredited parameters. The data presented in this report is organized by parameter (i.e. VOC, SVOC, etc.). Sample specific Quality Control data (i.e. Surrogate Spike Recovery) is reported at the end of the target analyte list for each individual sample, followed by the Laboratory Batch Quality Control at the end of each parameter. If a sample was re-analyzed or re-extracted due to a required quality control corrective action and if both sets of data are reported, the Laboratory ID of the re-analysis or re-extraction is designated with an "R" or "RE", respectively. When multiple Batch Quality Control elements are reported (e.g. more than one LCS), the associated samples for each element are noted in the grey shaded header line of each data table. Any Laboratory Batch, Sample Specific % recovery or RPD value that is outside the listed Acceptance Criteria is bolded in the report. Definitions of all data qualifiers and acronyms used in this report are provided in the Glossary located at the back of the report.

Please see the associated ADEx data file for a comparison of laboratory reporting limits that were achieved with the regulatory Numerical Standards requested on the Chain of Custody.

For additional information, please contact Client Services at 800-624-9220.

Volatile Organics in Air (Low Level)

All internal standard recoveries were within method criteria.

The WG407354-3 LCS recoveries for 1,2,3-Trichlorobenzene (132%) and Dodecane (c12) (137%) are outside the 70%-130% acceptance limit. The LCS was within overall method allowances, therefore the analysis proceeded.

Volatile Organics in Air (SIM)

Case Narrative (continued)

All internal standard recoveries were within method criteria.

The WG407158-3 LCS recoveries for Methyl tert butyl ether (68%) and trans-1,3-Dichloropropene (68%) are outside the 70%-130% acceptance limit. The LCS was within overall method allowances, therefore the analysis proceeded.

I, the undersigned, attest under the pains and penalties of perjury that, to the best of my knowledge and belief and based upon my personal inquiry of those responsible for providing the information contained in this analytical report, such information is accurate and complete. This certificate of analysis is not complete unless this page accompanies any and all pages of this report.

Authorized Signature: Kathleen M. O'Brien Kathleen O'Brien

Title: Technical Director/Representative Date: 05/10/10

Project Name:	BATCH CANISTER CERTIFICATION	***Lab Number:***	L1005024
Project Number:	CANISTER QC BAT	***Report Date:***	05/10/10

SAMPLE RESULTS

Lab ID:	L1005024-01	Date Collected:	04/06/10 00:00
Client ID:	CAN 478 SHELF 2	Date Received:	04/06/10
Sample Location:		Field Prep:	Not Specified
Matrix:	Air		
Anaytical Method:	48,TO-15		
Analytical Date:	04/08/10 20:32		
Analyst:	RY		

	ppbV			ug/m3				
Parameter	**Results**	**RL**	**MDL**	**Results**	**RL**	**MDL**	**Qualifier**	**Dilution Factor**
Volatile Organics in Air (Low Level) - Mansfield Lab								
1,1,1-Trichloroethane	ND	0.200	--	ND	1.09	--		1
1,1,2,2-Tetrachloroethane	ND	0.200	--	ND	1.37	--		1
1,1,2-Trichloroethane	ND	0.200	--	ND	1.09	--		1
1,1-Dichloroethane	ND	0.200	--	ND	0.809	--		1
1,1-Dichloroethene	ND	0.200	--	ND	0.792	--		1
1,2,4-Trichlorobenzene	ND	0.200	--	ND	1.48	--		1
1,2,4-Trimethylbenzene	ND	0.200	--	ND	0.982	--		1
1,2-Dibromoethane	ND	0.200	--	ND	1.54	--		1
1,2-Dichlorobenzene	ND	0.200	--	ND	1.20	--		1
1,2-Dichloroethane	ND	0.200	--	ND	0.809	--		1
1,2-Dichloropropane	ND	0.200	--	ND	0.924	--		1
1,3,5-Trimethybenzene	ND	0.200	--	ND	0.982	--		1
1,3-Butadiene	ND	0.200	--	ND	0.442	--		1
1,3-Dichlorobenzene	ND	0.200	--	ND	1.20	--		1
1,4-Dichlorobenzene	ND	0.200	--	ND	1.20	--		1
1,4-Dioxane	ND	0.200	--	ND	0.720	--		1
2,2,4-Trimethylpentane	ND	0.200	--	ND	0.934	--		1
2-Butanone	ND	0.200	--	ND	0.589	--		1
2-Hexanone	ND	0.200	--	ND	0.819	--		1
3-Chloropropene	ND	0.200	--	ND	0.626	--		1
4-Ethyltoluene	ND	0.200	--	ND	0.982	--		1
Acetone	ND	1.00	--	ND	2.37	--		1
Benzene	ND	0.200	--	ND	0.638	--		1
Benzyl chloride	ND	0.200	--	ND	1.03	--		1
Bromodichloromethane	ND	0.200	--	ND	1.34	--		1

Project Name:	BATCH CANISTER CERTIFICATION	***Lab Number:***	L1005024
Project Number:	CANISTER QC BAT	***Report Date:***	05/10/10

SAMPLE RESULTS

Lab ID:	L1005024-01	Date Collected:	04/06/10 00:00
Client ID:	CAN 478 SHELF 2	Date Received:	04/06/10
Sample Location:		Field Prep:	Not Specified

	ppbV			ug/m3				
Parameter	**Results**	**RL**	**MDL**	**Results**	**RL**	**MDL**	**Qualifier**	**Dilution Factor**
Volatile Organics in Air (Low Level) - Mansfield Lab								
Bromoform	ND	0.200	--	ND	2.06	--		1
Bromomethane	ND	0.200	--	ND	0.776	--		1
Carbon disulfide	ND	0.200	--	ND	0.622	--		1
Carbon tetrachloride	ND	0.200	--	ND	1.26	--		1
Chlorobenzene	ND	0.200	--	ND	0.920	--		1
Chloroethane	ND	0.200	--	ND	0.527	--		1
Chloroform	ND	0.200	--	ND	0.976	--		1
Chloromethane	ND	0.200	--	ND	0.413	--		1
cis-1,2-Dichloroethene	ND	0.200	--	ND	0.792	--		1
cis-1,3-Dichloropropene	ND	0.200	--	ND	0.907	--		1
Cyclohexane	ND	0.200	--	ND	0.688	--		1
Dibromochloromethane	ND	0.200	--	ND	1.70	--		1
Dichlorodifluoromethane	ND	0.200	--	ND	0.988	--		1
Ethanol	ND	2.50	--	ND	4.71	--		1
Ethyl Acetate	ND	0.500	--	ND	1.80	--		1
Ethylbenzene	ND	0.200	--	ND	0.868	--		1
Freon-113	ND	0.200	--	ND	1.53	--		1
Freon-114	ND	0.200	--	ND	1.40	--		1
Hexachlorobutadiene	ND	0.200	--	ND	2.13	--		1
Isopropanol	ND	0.500	--	ND	1.23	--		1
Methylene chloride	ND	0.500	--	ND	1.74	--		1
4-Methyl-2-pentanone	ND	0.200	--	ND	0.819	--		1
Methyl tert butyl ether	ND	0.200	--	ND	0.720	--		1
p/m-Xylene	ND	0.400	--	ND	1.74	--		1
o-Xylene	ND	0.200	--	ND	0.868	--		1
Heptane	ND	0.200	--	ND	0.819	--		1
n-Hexane	ND	0.200	--	ND	0.704	--		1
Propylene	ND	0.200	--	ND	0.344	--		1

Project Name:	BATCH CANISTER CERTIFICATION	***Lab Number:***	L1005024
Project Number:	CANISTER QC BAT	***Report Date:***	05/10/10

SAMPLE RESULTS

Lab ID:	L1005024-01	Date Collected:	04/06/10 00:00
Client ID:	CAN 478 SHELF 2	Date Received:	04/06/10
Sample Location:		Field Prep:	Not Specified

	ppbV			ug/m3				
Parameter	**Results**	**RL**	**MDL**	**Results**	**RL**	**MDL**	**Qualifier**	**Dilution Factor**
Volatile Organics in Air (Low Level) - Mansfield Lab								
Styrene	ND	0.200	--	ND	0.851	--		1
Tetrachloroethene	ND	0.200	--	ND	1.36	--		1
Tetrahydrofuran	ND	0.200	--	ND	0.589	--		1
Toluene	ND	0.200	--	ND	0.753	--		1
trans-1,2-Dichloroethene	ND	0.200	--	ND	0.792	--		1
trans-1,3-Dichloropropene	ND	0.200	--	ND	0.907	--		1
Trichloroethene	ND	0.200	--	ND	1.07	--		1
Trichlorofluoromethane	ND	0.200	--	ND	1.12	--		1
Vinyl acetate	ND	0.200	--	ND	0.704	--		1
Vinyl bromide	ND	0.200	--	ND	0.874	--		1
Vinyl chloride	ND	0.200	--	ND	0.511	--		1
Naphthalene	ND	0.200	--	ND	1.05	--		1
Propane	ND	0.200	--	ND	0.606	--		1
Acrylonitrile	ND	0.200	--	ND	0.434	--		1
Acrolein	ND	0.500	--	ND	1.14	--		1
1,1,1,2-Tetrachloroethane	ND	0.200	--	ND	1.37	--		1
Isopropylbenzene	ND	0.200	--	ND	0.982	--		1
1,2,3-Trichloropropane	ND	0.200	--	ND	1.20	--		1
Acetonitrile	ND	0.200	--	ND	0.336	--		1
Bromobenzene	ND	0.200	--	ND	1.28	--		1
Chlorodifluoromethane	ND	0.200	--	ND	0.707	--		1
Dichlorofluoromethane	ND	0.200	--	ND	0.841	--		1
Dibromomethane	ND	0.200	--	ND	1.42	--		1
Pentane	ND	0.200	--	ND	0.590	--		1
Octane	ND	0.200	--	ND	0.934	--		1
tert-Amyl Methyl Ether	ND	0.200	--	ND	0.835	--		1
2-Chlorotoluene	ND	0.200	--	ND	1.03	--		1
4-Chlorotoluene	ND	0.200	--	ND	1.03	--		1

Project Name:	BATCH CANISTER CERTIFICATION	***Lab Number:***	L1005024
Project Number:	CANISTER QC BAT	***Report Date:***	05/10/10

SAMPLE RESULTS

Lab ID:	L1005024-01	Date Collected:	04/06/10 00:00
Client ID:	CAN 478 SHELF 2	Date Received:	04/06/10
Sample Location:		Field Prep:	Not Specified

	ppbV			ug/m3				
Parameter	**Results**	**RL**	**MDL**	**Results**	**RL**	**MDL**	**Qualifier**	**Dilution Factor**
Volatile Organics in Air (Low Level) - Mansfield Lab								
2,2-Dichloropropane	ND	0.200	--	ND	0.923	--		1
1,1-Dichloropropene	ND	0.200	--	ND	0.907	--		1
Diisopropyl ether	ND	0.200	--	ND	0.835	--		1
tert-Butyl Ethyl Ether	ND	0.200	--	ND	0.835	--		1
1,2,3-Trichlorobenzene	ND	0.200	--	ND	1.48	--		1
Ethyl ether	ND	0.200	--	ND	0.606	--		1
n-Butylbenzene	ND	0.200	--	ND	1.10	--		1
sec-Butylbenzene	ND	0.200	--	ND	1.10	--		1
tert-Butylbenzene	ND	0.200	--	ND	1.10	--		1
1,2-Dibromo-3-chloropropane	ND	0.200	--	ND	1.93	--		1
p-Isopropyltoluene	ND	0.200	--	ND	1.10	--		1
n-Propylbenzene	ND	0.200	--	ND	0.982	--		1
1,3-Dichloropropane	ND	0.200	--	ND	0.923	--		1
Methanol	ND	5.00	--	ND	6.55	--		1
Butane	ND	0.200	--	ND	0.475	--		1
Nonane	ND	0.200	--	ND	1.05	--		1
Decane	ND	0.200	--	ND	1.16	--		1
Undecane	ND	0.200	--	ND	1.28	--		1
Dodecane	ND	0.200	--	ND	1.39	--		1
Butyl acetate	ND	0.500	--	ND	2.37	--		1
2,4,4-trimethyl-2-pentene	ND	0.500	--	ND	2.29	--		1
2,4,4-trimethyl-1-pentene	ND	0.500	--	ND	2.29	--		1
Tertiary butyl Alcohol	ND	0.500	--	ND	1.52	--		1

Project Name:	BATCH CANISTER CERTIFICATION	***Lab Number:***	L1005024
Project Number:	CANISTER QC BAT	***Report Date:***	05/10/10

SAMPLE RESULTS

Lab ID:	L1005024-01	Date Collected:	04/06/10 00:00
Client ID:	CAN 478 SHELF 2	Date Received:	04/06/10
Sample Location:		Field Prep:	Not Specified
Matrix:	Air		
Anaytical Method:	48,TO-15-SIM		
Analytical Date:	04/08/10 20:32		
Analyst:	RY		

	ppbV			ug/m3				
Parameter	**Results**	**RL**	**MDL**	**Results**	**RL**	**MDL**	**Qualifier**	**Dilution Factor**
Volatile Organics in Air by SIM - Mansfield Lab								
1,1,1-Trichloroethane	ND	0.020	--	ND	0.109	--		1
1,1,1,2-Tetrachloroethane	ND	0.020	--	ND	0.137	--		1
1,1,2,2-Tetrachloroethane	ND	0.020	--	ND	0.137	--		1
1,1,2-Trichloroethane	ND	0.020	--	ND	0.109	--		1
1,1-Dichloroethane	ND	0.020	--	ND	0.081	--		1
1,1-Dichloroethene	ND	0.020	--	ND	0.079	--		1
1,2,4-Trimethylbenzene	ND	0.020	--	ND	0.098	--		1
1,2-Dibromoethane	ND	0.020	--	ND	0.154	--		1
1,2-Dichlorobenzene	ND	0.020	--	ND	0.120	--		1
1,2-Dichloroethane	ND	0.020	--	ND	0.081	--		1
1,2-Dichloropropane	ND	0.020	--	ND	0.092	--		1
1,3,5-Trimethybenzene	ND	0.020	--	ND	0.098	--		1
1,3-Butadiene	ND	0.020	--	ND	0.044	--		1
1,3-Dichlorobenzene	ND	0.020	--	ND	0.120	--		1
1,4-Dichlorobenzene	ND	0.020	--	ND	0.120	--		1
1,4-Dioxane	ND	0.100	--	ND	0.360	--		1
Benzene	ND	0.100	--	ND	0.319	--		1
Bromodichloromethane	ND	0.020	--	ND	0.134	--		1
Bromoform	ND	0.020	--	ND	0.206	--		1
Bromomethane	ND	0.020	--	ND	0.078	--		1
Carbon tetrachloride	ND	0.020	--	ND	0.126	--		1
Chlorobenzene	ND	0.020	--	ND	0.092	--		1
Chloroethane	ND	0.020	--	ND	0.053	--		1
Chloroform	ND	0.020	--	ND	0.098	--		1
Chloromethane	ND	0.500	--	ND	2.44	--		1

Project Name: BATCH CANISTER CERTIFICATION **Lab Number:** L1005024
Project Number: CANISTER QC BAT **Report Date:** 05/10/10

SAMPLE RESULTS

Lab ID: L1005024-01 Date Collected: 04/06/10 00:00
Client ID: CAN 478 SHELF 2 Date Received: 04/06/10
Sample Location: Field Prep: Not Specified

Parameter	ppbV Results	ppbV RL	ppbV MDL	ug/m3 Results	ug/m3 RL	ug/m3 MDL	Qualifier	Dilution Factor
Volatile Organics in Air by SIM - Mansfield Lab								
cis-1,2-Dichloroethene	ND	0.020	--	ND	0.079	--		1
cis-1,3-Dichloropropene	ND	0.020	--	ND	0.091	--		1
Dibromochloromethane	ND	0.020	--	ND	0.096	--		1
Dichlorodifluoromethane	ND	0.050	--	ND	0.247	--		1
Ethylbenzene	ND	0.020	--	ND	0.087	--		1
Freon-113	ND	0.050	--	ND	0.383	--		1
Freon-114	ND	0.050	--	ND	0.349	--		1
Methylene chloride	ND	0.500	--	ND	1.74	--		1
Methyl tert butyl ether	ND	0.020	--	ND	0.072	--		1
Naphthalene	ND	0.050	--	ND	0.262	--		1
p/m-Xylene	ND	0.040	--	ND	0.174	--		1
o-Xylene	ND	0.020	--	ND	0.087	--		1
Styrene	ND	0.020	--	ND	0.085	--		1
Tetrachloroethene	ND	0.020	--	ND	0.136	--		1
Toluene	ND	0.020	--	ND	0.075	--		1
trans-1,2-Dichloroethene	ND	0.020	--	ND	0.079	--		1
trans-1,3-Dichloropropene	ND	0.020	--	ND	0.091	--		1
Trichloroethene	ND	0.020	--	ND	0.107	--		1
1,2,4-Trichlorobenzene	ND	0.050	--	ND	0.371	--		1
Trichlorofluoromethane	ND	0.050	--	ND	0.281	--		1
Hexachlorobutadiene	ND	0.050	--	ND	0.192	--		1
Vinyl chloride	ND	0.020	--	ND	0.051	--		1
Acrylonitrile	ND	0.500	--	ND	1.08	--		1
n-Butylbenzene	ND	0.500	--	ND	2.74	--		1
sec-Butylbenzene	ND	0.500	--	ND	2.74	--		1
Isopropylbenzene	ND	0.500	--	ND	2.46	--		1
p-Isopropyltoluene	ND	0.500	--	ND	2.74	--		1
Acetone	ND	2.00	--	ND	4.75	--		1

Project Name:	BATCH CANISTER CERTIFICATION	***Lab Number:***	L1005024
Project Number:	CANISTER QC BAT	***Report Date:***	05/10/10

SAMPLE RESULTS

Lab ID:	L1005024-01	Date Collected:	04/06/10 00:00
Client ID:	CAN 478 SHELF 2	Date Received:	04/06/10
Sample Location:		Field Prep:	Not Specified

	ppbV			ug/m3				
Parameter	**Results**	**RL**	**MDL**	**Results**	**RL**	**MDL**	**Qualifier**	**Dilution Factor**
Volatile Organics in Air by SIM - Mansfield Lab								
2-Butanone	ND	0.500	--	ND	1.47	--		1
4-Methyl-2-pentanone	ND	0.500	--	ND	2.05	--		1
Halothane	ND	0.050	--	ND	0.403	--		1
1,2,3-Trichlorobenzene	ND	0.050	--	ND	0.371	--		1

Project Name:	BATCH CANISTER CERTIFICATION	**Lab Number:**	L1004812
Project Number:	CANISTER QC BAT	**Report Date:**	04/23/10

Case Narrative

The samples were received in accordance with the Chain of Custody and no significant deviations were encountered during the preparation or analysis unless otherwise noted. Sample Receipt, Container Information, and the Chain of Custody are located at the back of the report.

Results contained within this report relate only to the samples submitted under this Alpha Lab Number and meet all of the requirements of NELAC, for all NELAC accredited parameters. The data presented in this report is organized by parameter (i.e. VOC, SVOC, etc.). Sample specific Quality Control data (i.e. Surrogate Spike Recovery) is reported at the end of the target analyte list for each individual sample, followed by the Laboratory Batch Quality Control at the end of each parameter. If a sample was re-analyzed or re-extracted due to a required quality control corrective action and if both sets of data are reported, the Laboratory ID of the re-analysis or re-extraction is designated with an "R" or "RE", respectively. When multiple Batch Quality Control elements are reported (e.g. more than one LCS), the associated samples for each element are noted in the grey shaded header line of each data table. Any Laboratory Batch, Sample Specific % recovery or RPD value that is outside the listed Acceptance Criteria is bolded in the report. Definitions of all data qualifiers and acronyms used in this report are provided in the Glossary located at the back of the report.

Please see the associated ADEx data file for a comparison of laboratory reporting limits that were achieved with the regulatory Numerical Standards requested on the Chain of Custody.

For additional information, please contact Client Services at 800-624-9220.

Batch Canister Certification

Volatile Organics in Air (Low Level)

The internal standards were within method criteria.

The WG406899-3 LCS recoveries for 3-Chloropropene (69%), Acrolein (68%) and 2,4,4-Trimethyl-1-pentene (154%) are outside the 70%-130% acceptance limit. The LCS was within overall method allowances, therefore the analysis proceeded.

Volatile Organics in Air (SIM)

The internal standards were within method criteria.

L1004812-01 Canister fails criteria due to a detection of Freon 113.

Project Name:	BATCH CANISTER CERTIFICATION	**Lab Number:**	L1004812
Project Number:	CANISTER QC BAT	**Report Date:**	04/23/10

Case Narrative (continued)

The WG406900-3 LCS recovery for 4-Methyl-2-pentanone (171%) is outside the 70%-130% acceptance limit. All samples associated with this LCS do not have reportable amounts of 4-Methyl-2-pentanone, therefore results are reported.

MCP Related Narratives

Petroleum Hydrocarbons in Air

The internal standards were within method criteria.

The WG354290-2 LCS recovery for Ethyl benzene and o-Xylene is outside the 70%-130% acceptance limit. Associated samples did not have reportable concentrations of either compound, therefore the results were released without qualification per the method.

I, the undersigned, attest under the pains and penalties of perjury that, to the best of my knowledge and belief and based upon my personal inquiry of those responsible for providing the information contained in this analytical report, such information is accurate and complete. This certificate of analysis is not complete unless this page accompanies any and all pages of this report.

Authorized Signature: Kathleen M. O'Brien Kathleen O'Brien

Title: Technical Director/Representative Date: 04/23/10

Project Name:	BATCH CANISTER CERTIFICATION	**Lab Number:**	L1004812
Project Number:	CANISTER QC BAT	**Report Date:**	04/23/10

SAMPLE RESULTS

Lab ID:	L1004812-01	Date Collected:	04/02/10 00:00
Client ID:	CAN 173 SHELF 8	Date Received:	04/02/10
Sample Location:		Field Prep:	Not Specified
Matrix:	Air		
Anaytical Method:	48,TO-15		
Analytical Date:	04/06/10 10:49		
Analyst:	AJ		

	ppbV		ug/m3			
Parameter	**Results**	**RDL**	**Results**	**RDL**	**Qualifier**	**Dilution Factor**
Volatile Organics in Air (Low Level) - Mansfield Lab						
1,1,1-Trichloroethane	ND	0.200	ND	1.09		1
1,1,2,2-Tetrachloroethane	ND	0.200	ND	1.37		1
1,1,2-Trichloroethane	ND	0.200	ND	1.09		1
1,1-Dichloroethane	ND	0.200	ND	0.809		1
1,1-Dichloroethene	ND	0.200	ND	0.792		1
1,2,4-Trichlorobenzene	ND	0.200	ND	1.48		1
1,2,4-Trimethylbenzene	ND	0.200	ND	0.982		1
1,2-Dibromoethane	ND	0.200	ND	1.54		1
1,2-Dichlorobenzene	ND	0.200	ND	1.20		1
1,2-Dichloroethane	ND	0.200	ND	0.809		1
1,2-Dichloropropane	ND	0.200	ND	0.924		1
1,3,5-Trimethybenzene	ND	0.200	ND	0.982		1
1,3-Butadiene	ND	0.200	ND	0.442		1
1,3-Dichlorobenzene	ND	0.200	ND	1.20		1
1,4-Dichlorobenzene	ND	0.200	ND	1.20		1
1,4-Dioxane	ND	0.200	ND	0.720		1
2,2,4-Trimethylpentane	ND	0.200	ND	0.934		1
2-Butanone	ND	0.200	ND	0.589		1
2-Hexanone	ND	0.200	ND	0.819		1
3-Chloropropene	ND	0.200	ND	0.626		1
4-Ethyltoluene	ND	0.200	ND	0.982		1
Acetone	ND	1.00	ND	2.37		1
Benzene	ND	0.200	ND	0.638		1
Benzyl chloride	ND	0.200	ND	1.03		1
Bromodichloromethane	ND	0.200	ND	1.34		1

Project Name: BATCH CANISTER CERTIFICATION
Project Number: CANISTER QC BAT

Lab Number: L1004812
Report Date: 04/23/10

SAMPLE RESULTS

Lab ID: L1004812-01
Client ID: CAN 173 SHELF 8
Sample Location:

Date Collected: 04/02/10 00:00
Date Received: 04/02/10
Field Prep: Not Specified

Parameter	ppbV Results	ppbV RDL	ug/m3 Results	ug/m3 RDL	Qualifier	Dilution Factor
Volatile Organics in Air (Low Level) - Mansfield Lab						
Bromoform	ND	0.200	ND	2.06		1
Bromomethane	ND	0.200	ND	0.776		1
Carbon disulfide	ND	0.200	ND	0.622		1
Carbon tetrachloride	ND	0.200	ND	1.26		1
Chlorobenzene	ND	0.200	ND	0.920		1
Chloroethane	ND	0.200	ND	0.527		1
Chloroform	ND	0.200	ND	0.976		1
Chloromethane	ND	0.200	ND	0.413		1
cis-1,2-Dichloroethene	ND	0.200	ND	0.792		1
cis-1,3-Dichloropropene	ND	0.200	ND	0.907		1
Cyclohexane	ND	0.200	ND	0.688		1
Dibromochloromethane	ND	0.200	ND	1.70		1
Dichlorodifluoromethane	ND	0.200	ND	0.988		1
Ethanol	ND	2.50	ND	4.71		1
Ethyl Acetate	ND	0.500	ND	1.80		1
Ethylbenzene	ND	0.200	ND	0.868		1
Freon-113	ND	0.200	ND	1.53		1
Freon-114	ND	0.200	ND	1.40		1
Hexachlorobutadiene	ND	0.200	ND	2.13		1
Isopropanol	ND	0.500	ND	1.23		1
Methylene chloride	ND	0.500	ND	1.74		1
4-Methyl-2-pentanone	ND	0.200	ND	0.819		1
Methyl tert butyl ether	ND	0.200	ND	0.720		1
p/m-Xylene	ND	0.400	ND	1.74		1
o-Xylene	ND	0.200	ND	0.868		1
Heptane	ND	0.200	ND	0.819		1
n-Hexane	ND	0.200	ND	0.704		1
Propylene	ND	0.200	ND	0.344		1

Project Name:	BATCH CANISTER CERTIFICATION	**Lab Number:**	L1004812
Project Number:	CANISTER QC BAT	**Report Date:**	04/23/10

SAMPLE RESULTS

Lab ID:	L1004812-01	Date Collected:	04/02/10 00:00
Client ID:	CAN 173 SHELF 8	Date Received:	04/02/10
Sample Location:		Field Prep:	Not Specified

Parameter	ppbV Results	ppbV RDL	ug/m3 Results	ug/m3 RDL	Qualifier	Dilution Factor
Volatile Organics in Air (Low Level) - Mansfield Lab						
Styrene	ND	0.200	ND	0.851		1
Tetrachloroethene	ND	0.200	ND	1.36		1
Tetrahydrofuran	ND	0.200	ND	0.589		1
Toluene	ND	0.200	ND	0.753		1
trans-1,2-Dichloroethene	ND	0.200	ND	0.792		1
trans-1,3-Dichloropropene	ND	0.200	ND	0.907		1
Trichloroethene	ND	0.200	ND	1.07		1
Trichlorofluoromethane	ND	0.200	ND	1.12		1
Vinyl acetate	ND	0.200	ND	0.704		1
Vinyl bromide	ND	0.200	ND	0.874		1
Vinyl chloride	ND	0.200	ND	0.511		1
Naphthalene	ND	0.200	ND	1.05		1
Propane	ND	0.200	ND	0.606		1
Acrylonitrile	ND	0.200	ND	0.434		1
Acrolein	ND	0.500	ND	1.14		1
1,1,1,2-Tetrachloroethane	ND	0.200	ND	1.37		1
Isopropylbenzene	ND	0.200	ND	0.982		1
1,2,3-Trichloropropane	ND	0.200	ND	1.20		1
Acetonitrile	ND	0.200	ND	0.336		1
Bromobenzene	ND	0.200	ND	1.28		1
Chlorodifluoromethane	ND	0.200	ND	0.707		1
Dichlorofluoromethane	ND	0.200	ND	0.841		1
Dibromomethane	ND	0.200	ND	1.42		1
Pentane	ND	0.200	ND	0.590		1
Octane	ND	0.200	ND	0.934		1
tert-Amyl Methyl Ether	ND	0.200	ND	0.835		1
2-Chlorotoluene	ND	0.200	ND	1.03		1
4-Chlorotoluene	ND	0.200	ND	1.03		1

Project Name:	BATCH CANISTER CERTIFICATION	**Lab Number:**	L1004812
Project Number:	CANISTER QC BAT	**Report Date:**	04/23/10

SAMPLE RESULTS

Lab ID:	L1004812-01	Date Collected:	04/02/10 00:00
Client ID:	CAN 173 SHELF 8	Date Received:	04/02/10
Sample Location:		Field Prep:	Not Specified

	ppbV		ug/m3			
Parameter	**Results**	**RDL**	**Results**	**RDL**	**Qualifier**	**Dilution Factor**
Volatile Organics in Air (Low Level) - Mansfield Lab						
2,2-Dichloropropane	ND	0.200	ND	0.923		1
1,1-Dichloropropene	ND	0.200	ND	0.907		1
Diisopropyl ether	ND	0.200	ND	0.835		1
tert-Butyl Ethyl Ether	ND	0.200	ND	0.835		1
1,2,3-Trichlorobenzene	ND	0.200	ND	1.48		1
Ethyl ether	ND	0.200	ND	0.606		1
n-Butylbenzene	ND	0.200	ND	1.10		1
sec-Butylbenzene	ND	0.200	ND	1.10		1
tert-Butylbenzene	ND	0.200	ND	1.10		1
1,2-Dibromo-3-chloropropane	ND	0.200	ND	1.93		1
p-Isopropyltoluene	ND	0.200	ND	1.10		1
n-Propylbenzene	ND	0.200	ND	0.982		1
1,3-Dichloropropane	ND	0.200	ND	0.923		1
Butane	ND	0.200	ND	0.475		1
Nonane	ND	0.200	ND	1.05		1
Decane	ND	0.200	ND	1.16		1
Undecane	ND	0.200	ND	1.28		1
Dodecane	ND	0.200	ND	1.39		1
Butyl acetate	ND	0.500	ND	2.37		1
2,4,4-trimethyl-2-pentene	ND	0.500	ND	2.29		1
2,4,4-trimethyl-1-pentene	ND	0.500	ND	2.29		1
Tertiary butyl Alcohol	ND	0.500	ND	1.52		1

Project Name:	BATCH CANISTER CERTIFICATION	**Lab Number:**	L1004812
Project Number:	CANISTER QC BAT	**Report Date:**	04/23/10

SAMPLE RESULTS

Lab ID:	L1004812-01	Date Collected:	04/02/10 00:00
Client ID:	CAN 173 SHELF 8	Date Received:	04/02/10
Sample Location:		Field Prep:	Not Specified
Matrix:	Air		
Anaytical Method:	48,TO-15-SIM		
Analytical Date:	04/06/10 10:49		
Analyst:	AJ		

	ppbV		ug/m3			
Parameter	**Results**	**RDL**	**Results**	**RDL**	**Qualifier**	**Dilution Factor**
Volatile Organics in Air by SIM - Mansfield Lab						
1,1,1-Trichloroethane	ND	0.020	ND	0.109		1
1,1,1,2-Tetrachloroethane	ND	0.020	ND	0.137		1
1,1,2,2-Tetrachloroethane	ND	0.020	ND	0.137		1
1,1,2-Trichloroethane	ND	0.020	ND	0.109		1
1,1-Dichloroethane	ND	0.020	ND	0.081		1
1,1-Dichloroethene	ND	0.020	ND	0.079		1
1,2,4-Trimethylbenzene	ND	0.020	ND	0.098		1
1,2-Dibromoethane	ND	0.020	ND	0.154		1
1,2-Dichlorobenzene	ND	0.020	ND	0.120		1
1,2-Dichloroethane	ND	0.020	ND	0.081		1
1,2-Dichloropropane	ND	0.020	ND	0.092		1
1,3,5-Trimethybenzene	ND	0.020	ND	0.098		1
1,3-Butadiene	ND	0.020	ND	0.044		1
1,3-Dichlorobenzene	ND	0.020	ND	0.120		1
1,4-Dichlorobenzene	ND	0.020	ND	0.120		1
1,4-Dioxane	ND	0.100	ND	0.360		1
Benzene	ND	0.100	ND	0.319		1
Bromodichloromethane	ND	0.020	ND	0.134		1
Bromoform	ND	0.020	ND	0.206		1
Bromomethane	ND	0.020	ND	0.078		1
Carbon tetrachloride	ND	0.020	ND	0.126		1
Chlorobenzene	ND	0.020	ND	0.092		1
Chloroethane	ND	0.020	ND	0.053		1
Chloroform	ND	0.020	ND	0.098		1
Chloromethane	ND	0.500	ND	2.44		1

Project Name:	BATCH CANISTER CERTIFICATION	**Lab Number:**	L1004812
Project Number:	CANISTER QC BAT	**Report Date:**	04/23/10

SAMPLE RESULTS

Lab ID:	L1004812-01	Date Collected:	04/02/10 00:00
Client ID:	CAN 173 SHELF 8	Date Received:	04/02/10
Sample Location:		Field Prep:	Not Specified

Parameter	ppbV Results	ppbV RDL	ug/m3 Results	ug/m3 RDL	Qualifier	Dilution Factor
Volatile Organics in Air by SIM - Mansfield Lab						
cis-1,2-Dichloroethene	ND	0.020	ND	0.079		1
cis-1,3-Dichloropropene	ND	0.020	ND	0.091		1
Dibromochloromethane	ND	0.020	ND	0.096		1
Dichlorodifluoromethane	ND	0.050	ND	0.247		1
Ethylbenzene	ND	0.020	ND	0.087		1
Freon-113	0.061	0.050	0.467	0.383		1
Freon-114	ND	0.050	ND	0.349		1
Methylene chloride	ND	0.500	ND	1.74		1
Methyl tert butyl ether	ND	0.020	ND	0.072		1
Naphthalene	ND	0.050	ND	0.262		1
p/m-Xylene	ND	0.040	ND	0.174		1
o-Xylene	ND	0.020	ND	0.087		1
Styrene	ND	0.020	ND	0.085		1
Tetrachloroethene	ND	0.020	ND	0.136		1
Toluene	ND	0.020	ND	0.075		1
trans-1,2-Dichloroethene	ND	0.020	ND	0.079		1
trans-1,3-Dichloropropene	ND	0.020	ND	0.091		1
Trichloroethene	ND	0.020	ND	0.107		1
1,2,4-Trichlorobenzene	ND	0.050	ND	0.371		1
Trichlorofluoromethane	ND	0.050	ND	0.281		1
Hexachlorobutadiene	ND	0.050	ND	0.192		1
Vinyl chloride	ND	0.020	ND	0.051		1
Acrylonitrile	ND	0.500	ND	1.08		1
n-Butylbenzene	ND	0.500	ND	2.74		1
sec-Butylbenzene	ND	0.500	ND	2.74		1
Isopropylbenzene	ND	0.500	ND	2.46		1
p-Isopropyltoluene	ND	0.500	ND	2.74		1
Acetone	ND	2.00	ND	4.75		1

Project Name:	BATCH CANISTER CERTIFICATION	**Lab Number:**	L1004812
Project Number:	CANISTER QC BAT	**Report Date:**	04/23/10

SAMPLE RESULTS

Lab ID:	L1004812-01	Date Collected:	04/02/10 00:00
Client ID:	CAN 173 SHELF 8	Date Received:	04/02/10
Sample Location:		Field Prep:	Not Specified

	ppbV		ug/m3			
Parameter	**Results**	**RDL**	**Results**	**RDL**	**Qualifier**	**Dilution Factor**
Volatile Organics in Air by SIM - Mansfield Lab						
2-Butanone	ND	0.500	ND	1.47		1
4-Methyl-2-pentanone	ND	0.500	ND	2.05		1
Halothane	ND	0.050	ND	0.403		1
1,2,3-Trichlorobenzene	ND	0.050	ND	0.371		1

GROUNDWATER

ANALYTICAL REPORT

Lab Number:	L1004994
Client:	TRC Environmental Consultants Wannalancit Mills 650 Suffolk Street Lowell, MA 01854
ATTN:	David Sullivan
Phone:	(978) 656-3565
Project Name:	CITY OF NEW BEDFORD
Project Number:	115058
Report Date:	04/14/10

Certifications & Approvals: MA (M-MA086), NY NELAC (11148), CT (PH-0574), NH (2003), NJ (MA935), RI (LAO00065), ME (MA0086), PA (Registration #68-03671), USDA (Permit #S-72578), US Army Corps of Engineers, Naval FESC.

Eight Walkup Drive, Westborough, MA 01581-1019
508-898-9220 (Fax) 508-898-9193 800-624-9220 - www.alphalab.com

Project Name: CITY OF NEW BEDFORD
Project Number: 115058

Lab Number: L1004994
Report Date: 04/14/10

Alpha Sample ID	Client ID	Sample Location	Collection Date/Time
L1004994-01	MW-7	NBHS	04/07/10 13:05
L1004994-02	MW-11	NBHS	04/07/10 13:33
L1004994-03	TRIP BLANK	NBHS	04/07/10 00:00

Project Name:	CITY OF NEW BEDFORD	**Lab Number:**	L1004994
Project Number:	115058	**Report Date:**	04/14/10

MADEP MCP Response Action Analytical Report Certification

This form provides certifications for all samples performed by MCP methods. Please refer to the Sample Results and Container Information sections of this report for specification of MCP methods used for each analysis. The following questions pertain only to MCP Analytical Methods.

An affirmative response to questions A, B, C & D is required for "Presumptive Certainty" status		
A	Were all samples received by the laboratory in a condition consistent with those described on their Chain-of-Custody documentation for the data set?	YES
B	Were all QA/QC procedures required for the specified analytical methods(s) included in this report followed, including the requirement to note and discuss in a narrative QC data that did not meet appropriate performance standards or guidelines?	YES
C	Does the analytical data included in this report meet all the requirements for "Presumptive Certainty", as described in section 2.0 of the MADEP document CAM VII A, "Quality Assurance and Quality Control Guidelines for the Acquisition and Reporting of Analytical Data"?	YES
D	VPH and EPH methods only: Was the VPH or EPH method run without significant modifications, as specified in Section 11.3?	N/A

A response to questions E and F is required for "Presumptive Certainty" status		
E	Were all QC performance standards and recommendations for the specified method(s) achieved?	NO
F	Were results for all analyte-list compounds/elements for the specified method(s) reported?	YES

For any questions answered "No", please refer to the case narrative section on the following page(s).

Please note that sample matrix information is located in the Sample Results section of this report.

Project Name:	CITY OF NEW BEDFORD	**Lab Number:**	L1004994
Project Number:	115058	**Report Date:**	04/14/10

Case Narrative

The samples were received in accordance with the Chain of Custody and no significant deviations were encountered during the preparation or analysis unless otherwise noted. Sample Receipt, Container Information, and the Chain of Custody are located at the back of the report.

Results contained within this report relate only to the samples submitted under this Alpha Lab Number and meet all of the requirements of NELAC, for all NELAC accredited parameters. The data presented in this report is organized by parameter (i.e. VOC, SVOC, etc.). Sample specific Quality Control data (i.e. Surrogate Spike Recovery) is reported at the end of the target analyte list for each individual sample, followed by the Laboratory Batch Quality Control at the end of each parameter. If a sample was re-analyzed or re-extracted due to a required quality control corrective action and if both sets of data are reported, the Laboratory ID of the re-analysis or re-extraction is designated with an "R" or "RE", respectively. When multiple Batch Quality Control elements are reported (e.g. more than one LCS), the associated samples for each element are noted in the grey shaded header line of each data table. Any Laboratory Batch, Sample Specific % recovery or RPD value that is outside the listed Acceptance Criteria is bolded in the report. Definitions of all data qualifiers and acronyms used in this report are provided in the Glossary located at the back of the report.

Please see the associated ADEx data file for a comparison of laboratory reporting limits that were achieved with the regulatory Numerical Standards requested on the Chain of Custody.

For additional information, please contact Client Services at 800-624-9220.

MCP Related Narratives

Volatile Organics

L1004994-01, -02, and -03 were processed against a calibration curve that utilized a quadratic fit for Carbon tetrachloride, Dibromochloromethane, 1,1,1-Trichloroethane, trans-1,3-Dichloropropene, cis-1,3-Dichloropropene, Bromoform, 2-Hexanone, 2,2-Dichloropropane, 1,2-Dibromoethane, 1,1,1,2-Tetrachloroethane, n-Butylbenzene, Hexachlorobutadiene, Naphthalene, and 1,2,3-Trichlorobenzene.

In reference to question E:

The WG407387-1/-2 LCS/LCSD recoveries, associated with L1004994-01, -02, and -03, are below the acceptance criteria for Dichlorodifluoromethane (60%/59%); however, it has been identified as a "difficult" analyte. The results of the associated samples are reported; however, all results are considered to have a potentially low bias for this compound.

I, the undersigned, attest under the pains and penalties of perjury that, to the best of my knowledge and belief and based upon my personal inquiry of those responsible for providing the information contained in this analytical report, such information is accurate and complete. This certificate of analysis is not complete unless this page accompanies any and all pages of this report.

Authorized Signature: Michelle M. Morris

Title: Technical Director/Representative

Date: 04/14/10

ORGANICS

VOLATILES

Project Name:	CITY OF NEW BEDFORD	**Lab Number:**	L1004994
Project Number:	115058	**Report Date:**	04/14/10

SAMPLE RESULTS

Lab ID:	L1004994-01	Date Collected:	04/07/10 13:05
Client ID:	MW-7	Date Received:	04/07/10
Sample Location:	NBHS	Field Prep:	Not Specified
Matrix:	Water		
Analytical Method:	60,8260B		
Analytical Date:	04/08/10 17:58		
Analyst:	MM		

Parameter	Result	Qualifier	Units	RDL	Dilution Factor
MCP Volatile Organics - Westborough Lab					
Methylene chloride	ND		ug/l	5.0	1
1,1-Dichloroethane	ND		ug/l	1.0	1
Chloroform	ND		ug/l	1.0	1
Carbon tetrachloride	ND		ug/l	1.0	1
1,2-Dichloropropane	ND		ug/l	1.0	1
Dibromochloromethane	ND		ug/l	1.0	1
1,1,2-Trichloroethane	ND		ug/l	1.0	1
Tetrachloroethene	64		ug/l	1.0	1
Chlorobenzene	ND		ug/l	1.0	1
Trichlorofluoromethane	ND		ug/l	2.0	1
1,2-Dichloroethane	ND		ug/l	1.0	1
1,1,1-Trichloroethane	ND		ug/l	1.0	1
Bromodichloromethane	ND		ug/l	1.0	1
trans-1,3-Dichloropropene	ND		ug/l	0.50	1
cis-1,3-Dichloropropene	ND		ug/l	0.50	1
1,1-Dichloropropene	ND		ug/l	2.0	1
Bromoform	ND		ug/l	2.0	1
1,1,2,2-Tetrachloroethane	ND		ug/l	1.0	1
Benzene	ND		ug/l	1.0	1
Toluene	ND		ug/l	1.0	1
Ethylbenzene	ND		ug/l	1.0	1
Chloromethane	ND		ug/l	2.0	1
Bromomethane	ND		ug/l	5.0	1
Vinyl chloride	1.6		ug/l	1.0	1
Chloroethane	ND		ug/l	2.0	1
1,1-Dichloroethene	ND		ug/l	1.0	1
trans-1,2-Dichloroethene	ND		ug/l	1.0	1
Trichloroethene	4.5		ug/l	1.0	1
1,2-Dichlorobenzene	ND		ug/l	1.0	1
1,3-Dichlorobenzene	ND		ug/l	1.0	1

Project Name:	CITY OF NEW BEDFORD	**Lab Number:**	L1004994
Project Number:	115058	**Report Date:**	04/14/10

SAMPLE RESULTS

Lab ID:	L1004994-01	Date Collected:	04/07/10 13:05
Client ID:	MW-7	Date Received:	04/07/10
Sample Location:	NBHS	Field Prep:	Not Specified

Parameter	Result	Qualifier	Units	RDL	Dilution Factor
MCP Volatile Organics - Westborough Lab					
1,4-Dichlorobenzene	ND		ug/l	1.0	1
Methyl tert butyl ether	ND		ug/l	2.0	1
p/m-Xylene	ND		ug/l	2.0	1
o-Xylene	ND		ug/l	1.0	1
cis-1,2-Dichloroethene	9.6		ug/l	1.0	1
Dibromomethane	ND		ug/l	2.0	1
1,2,3-Trichloropropane	ND		ug/l	2.0	1
Styrene	ND		ug/l	1.0	1
Dichlorodifluoromethane	ND		ug/l	2.0	1
Acetone	ND		ug/l	5.0	1
Carbon disulfide	ND		ug/l	2.0	1
2-Butanone	ND		ug/l	5.0	1
4-Methyl-2-pentanone	ND		ug/l	5.0	1
2-Hexanone	ND		ug/l	5.0	1
Bromochloromethane	ND		ug/l	2.0	1
Tetrahydrofuran	ND		ug/l	10	1
2,2-Dichloropropane	ND		ug/l	2.0	1
1,2-Dibromoethane	ND		ug/l	2.0	1
1,3-Dichloropropane	ND		ug/l	2.0	1
1,1,1,2-Tetrachloroethane	ND		ug/l	1.0	1
Bromobenzene	ND		ug/l	2.0	1
n-Butylbenzene	ND		ug/l	2.0	1
sec-Butylbenzene	ND		ug/l	2.0	1
tert-Butylbenzene	ND		ug/l	2.0	1
o-Chlorotoluene	ND		ug/l	2.0	1
p-Chlorotoluene	ND		ug/l	2.0	1
1,2-Dibromo-3-chloropropane	ND		ug/l	5.0	1
Hexachlorobutadiene	ND		ug/l	0.60	1
Isopropylbenzene	ND		ug/l	2.0	1
p-Isopropyltoluene	ND		ug/l	2.0	1
Naphthalene	ND		ug/l	5.0	1
n-Propylbenzene	ND		ug/l	2.0	1
1,2,3-Trichlorobenzene	ND		ug/l	2.0	1
1,2,4-Trichlorobenzene	ND		ug/l	2.0	1
1,3,5-Trimethylbenzene	ND		ug/l	2.0	1
1,2,4-Trimethylbenzene	ND		ug/l	2.0	1
Ethyl ether	ND		ug/l	2.0	1

Project Name:	CITY OF NEW BEDFORD	**Lab Number:**	L1004994
Project Number:	115058	**Report Date:**	04/14/10

SAMPLE RESULTS

Lab ID:	L1004994-01	Date Collected:	04/07/10 13:05
Client ID:	MW-7	Date Received:	04/07/10
Sample Location:	NBHS	Field Prep:	Not Specified

Parameter	Result	Qualifier	Units	RDL	Dilution Factor
MCP Volatile Organics - Westborough Lab					
Isopropyl Ether	ND		ug/l	2.0	1
Ethyl-Tert-Butyl-Ether	ND		ug/l	2.0	1
Tertiary-Amyl Methyl Ether	ND		ug/l	2.0	1
1,4-Dioxane	ND		ug/l	250	1

Surrogate	% Recovery	Qualifier	Acceptance Criteria
1,2-Dichloroethane-d4	104		70-130
Toluene-d8	101		70-130
4-Bromofluorobenzene	106		70-130
Dibromofluoromethane	94		70-130

Project Name:	CITY OF NEW BEDFORD	**Lab Number:**	L1004994
Project Number:	115058	**Report Date:**	04/14/10

SAMPLE RESULTS

Lab ID:	L1004994-02	Date Collected:	04/07/10 13:33
Client ID:	MW-11	Date Received:	04/07/10
Sample Location:	NBHS	Field Prep:	Not Specified
Matrix:	Water		
Analytical Method:	60,8260B		
Analytical Date:	04/08/10 18:30		
Analyst:	MM		

Parameter	Result	Qualifier	Units	RDL	Dilution Factor
MCP Volatile Organics - Westborough Lab					
Methylene chloride	ND		ug/l	5.0	1
1,1-Dichloroethane	ND		ug/l	1.0	1
Chloroform	ND		ug/l	1.0	1
Carbon tetrachloride	ND		ug/l	1.0	1
1,2-Dichloropropane	ND		ug/l	1.0	1
Dibromochloromethane	ND		ug/l	1.0	1
1,1,2-Trichloroethane	ND		ug/l	1.0	1
Tetrachloroethene	ND		ug/l	1.0	1
Chlorobenzene	ND		ug/l	1.0	1
Trichlorofluoromethane	ND		ug/l	2.0	1
1,2-Dichloroethane	ND		ug/l	1.0	1
1,1,1-Trichloroethane	ND		ug/l	1.0	1
Bromodichloromethane	ND		ug/l	1.0	1
trans-1,3-Dichloropropene	ND		ug/l	0.50	1
cis-1,3-Dichloropropene	ND		ug/l	0.50	1
1,1-Dichloropropene	ND		ug/l	2.0	1
Bromoform	ND		ug/l	2.0	1
1,1,2,2-Tetrachloroethane	ND		ug/l	1.0	1
Benzene	ND		ug/l	1.0	1
Toluene	ND		ug/l	1.0	1
Ethylbenzene	ND		ug/l	1.0	1
Chloromethane	ND		ug/l	2.0	1
Bromomethane	ND		ug/l	5.0	1
Vinyl chloride	ND		ug/l	1.0	1
Chloroethane	ND		ug/l	2.0	1
1,1-Dichloroethene	ND		ug/l	1.0	1
trans-1,2-Dichloroethene	ND		ug/l	1.0	1
Trichloroethene	ND		ug/l	1.0	1
1,2-Dichlorobenzene	ND		ug/l	1.0	1
1,3-Dichlorobenzene	ND		ug/l	1.0	1

Project Name: CITY OF NEW BEDFORD **Lab Number:** L1004994

Project Number: 115058 **Report Date:** 04/14/10

SAMPLE RESULTS

Lab ID: L1004994-02 Date Collected: 04/07/10 13:33

Client ID: MW-11 Date Received: 04/07/10

Sample Location: NBHS Field Prep: Not Specified

Parameter	Result	Qualifier	Units	RDL	Dilution Factor
MCP Volatile Organics - Westborough Lab					
1,4-Dichlorobenzene	ND		ug/l	1.0	1
Methyl tert butyl ether	ND		ug/l	2.0	1
p/m-Xylene	ND		ug/l	2.0	1
o-Xylene	ND		ug/l	1.0	1
cis-1,2-Dichloroethene	ND		ug/l	1.0	1
Dibromomethane	ND		ug/l	2.0	1
1,2,3-Trichloropropane	ND		ug/l	2.0	1
Styrene	ND		ug/l	1.0	1
Dichlorodifluoromethane	ND		ug/l	2.0	1
Acetone	ND		ug/l	5.0	1
Carbon disulfide	ND		ug/l	2.0	1
2-Butanone	ND		ug/l	5.0	1
4-Methyl-2-pentanone	ND		ug/l	5.0	1
2-Hexanone	ND		ug/l	5.0	1
Bromochloromethane	ND		ug/l	2.0	1
Tetrahydrofuran	ND		ug/l	10	1
2,2-Dichloropropane	ND		ug/l	2.0	1
1,2-Dibromoethane	ND		ug/l	2.0	1
1,3-Dichloropropane	ND		ug/l	2.0	1
1,1,1,2-Tetrachloroethane	ND		ug/l	1.0	1
Bromobenzene	ND		ug/l	2.0	1
n-Butylbenzene	ND		ug/l	2.0	1
sec-Butylbenzene	ND		ug/l	2.0	1
tert-Butylbenzene	ND		ug/l	2.0	1
o-Chlorotoluene	ND		ug/l	2.0	1
p-Chlorotoluene	ND		ug/l	2.0	1
1,2-Dibromo-3-chloropropane	ND		ug/l	5.0	1
Hexachlorobutadiene	ND		ug/l	0.60	1
Isopropylbenzene	ND		ug/l	2.0	1
p-Isopropyltoluene	ND		ug/l	2.0	1
Naphthalene	ND		ug/l	5.0	1
n-Propylbenzene	ND		ug/l	2.0	1
1,2,3-Trichlorobenzene	ND		ug/l	2.0	1
1,2,4-Trichlorobenzene	ND		ug/l	2.0	1
1,3,5-Trimethylbenzene	ND		ug/l	2.0	1
1,2,4-Trimethylbenzene	ND		ug/l	2.0	1
Ethyl ether	ND		ug/l	2.0	1

Project Name:	CITY OF NEW BEDFORD	**Lab Number:**	L1004994
Project Number:	115058	**Report Date:**	04/14/10

SAMPLE RESULTS

Lab ID:	L1004994-02	Date Collected:	04/07/10 13:33
Client ID:	MW-11	Date Received:	04/07/10
Sample Location:	NBHS	Field Prep:	Not Specified

Parameter	Result	Qualifier	Units	RDL	Dilution Factor
MCP Volatile Organics - Westborough Lab					
Isopropyl Ether	ND		ug/l	2.0	1
Ethyl-Tert-Butyl-Ether	ND		ug/l	2.0	1
Tertiary-Amyl Methyl Ether	ND		ug/l	2.0	1
1,4-Dioxane	ND		ug/l	250	1

Surrogate	% Recovery	Qualifier	Acceptance Criteria
1,2-Dichloroethane-d4	111		70-130
Toluene-d8	100		70-130
4-Bromofluorobenzene	107		70-130
Dibromofluoromethane	98		70-130

Project Name:	CITY OF NEW BEDFORD	**Lab Number:**	L1004994
Project Number:	115058	**Report Date:**	04/14/10

SAMPLE RESULTS

Lab ID:	L1004994-03	Date Collected:	04/07/10 00:00
Client ID:	TRIP BLANK	Date Received:	04/07/10
Sample Location:	NBHS	Field Prep:	Not Specified
Matrix:	Water		
Analytical Method:	60,8260B		
Analytical Date:	04/08/10 19:01		
Analyst:	MM		

Parameter	Result	Qualifier	Units	RDL	Dilution Factor
MCP Volatile Organics - Westborough Lab					
Methylene chloride	ND		ug/l	5.0	1
1,1-Dichloroethane	ND		ug/l	1.0	1
Chloroform	ND		ug/l	1.0	1
Carbon tetrachloride	ND		ug/l	1.0	1
1,2-Dichloropropane	ND		ug/l	1.0	1
Dibromochloromethane	ND		ug/l	1.0	1
1,1,2-Trichloroethane	ND		ug/l	1.0	1
Tetrachloroethene	ND		ug/l	1.0	1
Chlorobenzene	ND		ug/l	1.0	1
Trichlorofluoromethane	ND		ug/l	2.0	1
1,2-Dichloroethane	ND		ug/l	1.0	1
1,1,1-Trichloroethane	ND		ug/l	1.0	1
Bromodichloromethane	ND		ug/l	1.0	1
trans-1,3-Dichloropropene	ND		ug/l	0.50	1
cis-1,3-Dichloropropene	ND		ug/l	0.50	1
1,1-Dichloropropene	ND		ug/l	2.0	1
Bromoform	ND		ug/l	2.0	1
1,1,2,2-Tetrachloroethane	ND		ug/l	1.0	1
Benzene	ND		ug/l	1.0	1
Toluene	ND		ug/l	1.0	1
Ethylbenzene	ND		ug/l	1.0	1
Chloromethane	ND		ug/l	2.0	1
Bromomethane	ND		ug/l	5.0	1
Vinyl chloride	ND		ug/l	1.0	1
Chloroethane	ND		ug/l	2.0	1
1,1-Dichloroethene	ND		ug/l	1.0	1
trans-1,2-Dichloroethene	ND		ug/l	1.0	1
Trichloroethene	ND		ug/l	1.0	1
1,2-Dichlorobenzene	ND		ug/l	1.0	1
1,3-Dichlorobenzene	ND		ug/l	1.0	1

Project Name:	CITY OF NEW BEDFORD	**Lab Number:**	L1004994
Project Number:	115058	**Report Date:**	04/14/10

SAMPLE RESULTS

Lab ID:	L1004994-03	Date Collected:	04/07/10 00:00
Client ID:	TRIP BLANK	Date Received:	04/07/10
Sample Location:	NBHS	Field Prep:	Not Specified

Parameter	Result	Qualifier	Units	RDL	Dilution Factor
MCP Volatile Organics - Westborough Lab					
1,4-Dichlorobenzene	ND		ug/l	1.0	1
Methyl tert butyl ether	ND		ug/l	2.0	1
p/m-Xylene	ND		ug/l	2.0	1
o-Xylene	ND		ug/l	1.0	1
cis-1,2-Dichloroethene	ND		ug/l	1.0	1
Dibromomethane	ND		ug/l	2.0	1
1,2,3-Trichloropropane	ND		ug/l	2.0	1
Styrene	ND		ug/l	1.0	1
Dichlorodifluoromethane	ND		ug/l	2.0	1
Acetone	ND		ug/l	5.0	1
Carbon disulfide	ND		ug/l	2.0	1
2-Butanone	ND		ug/l	5.0	1
4-Methyl-2-pentanone	ND		ug/l	5.0	1
2-Hexanone	ND		ug/l	5.0	1
Bromochloromethane	ND		ug/l	2.0	1
Tetrahydrofuran	ND		ug/l	10	1
2,2-Dichloropropane	ND		ug/l	2.0	1
1,2-Dibromoethane	ND		ug/l	2.0	1
1,3-Dichloropropane	ND		ug/l	2.0	1
1,1,1,2-Tetrachloroethane	ND		ug/l	1.0	1
Bromobenzene	ND		ug/l	2.0	1
n-Butylbenzene	ND		ug/l	2.0	1
sec-Butylbenzene	ND		ug/l	2.0	1
tert-Butylbenzene	ND		ug/l	2.0	1
o-Chlorotoluene	ND		ug/l	2.0	1
p-Chlorotoluene	ND		ug/l	2.0	1
1,2-Dibromo-3-chloropropane	ND		ug/l	5.0	1
Hexachlorobutadiene	ND		ug/l	0.60	1
Isopropylbenzene	ND		ug/l	2.0	1
p-Isopropyltoluene	ND		ug/l	2.0	1
Naphthalene	ND		ug/l	5.0	1
n-Propylbenzene	ND		ug/l	2.0	1
1,2,3-Trichlorobenzene	ND		ug/l	2.0	1
1,2,4-Trichlorobenzene	ND		ug/l	2.0	1
1,3,5-Trimethylbenzene	ND		ug/l	2.0	1
1,2,4-Trimethylbenzene	ND		ug/l	2.0	1
Ethyl ether	ND		ug/l	2.0	1

Project Name:	CITY OF NEW BEDFORD	**Lab Number:**	L1004994
Project Number:	115058	**Report Date:**	04/14/10

SAMPLE RESULTS

Lab ID:	L1004994-03	Date Collected:	04/07/10 00:00
Client ID:	TRIP BLANK	Date Received:	04/07/10
Sample Location:	NBHS	Field Prep:	Not Specified

Parameter	Result	Qualifier	Units	RDL	Dilution Factor
MCP Volatile Organics - Westborough Lab					
Isopropyl Ether	ND		ug/l	2.0	1
Ethyl-Tert-Butyl-Ether	ND		ug/l	2.0	1
Tertiary-Amyl Methyl Ether	ND		ug/l	2.0	1
1,4-Dioxane	ND		ug/l	250	1

Surrogate	% Recovery	Qualifier	Acceptance Criteria
1,2-Dichloroethane-d4	107		70-130
Toluene-d8	103		70-130
4-Bromofluorobenzene	107		70-130
Dibromofluoromethane	97		70-130

Project Name: CITY OF NEW BEDFORD **Lab Number:** L1004994

Project Number: 115058 **Report Date:** 04/14/10

Method Blank Analysis
Batch Quality Control

Analytical Method: 60,8260B
Analytical Date: 04/08/10 10:36
Analyst: MM

Parameter	Result	Qualifier	Units	RDL
MCP Volatile Organics - Westborough Lab for sample(s): 01-03 Batch: WG407387-3				
Methylene chloride	ND		ug/l	5.0
1,1-Dichloroethane	ND		ug/l	1.0
Chloroform	ND		ug/l	1.0
Carbon tetrachloride	ND		ug/l	1.0
1,2-Dichloropropane	ND		ug/l	1.0
Dibromochloromethane	ND		ug/l	1.0
1,1,2-Trichloroethane	ND		ug/l	1.0
Tetrachloroethene	ND		ug/l	1.0
Chlorobenzene	ND		ug/l	1.0
Trichlorofluoromethane	ND		ug/l	2.0
1,2-Dichloroethane	ND		ug/l	1.0
1,1,1-Trichloroethane	ND		ug/l	1.0
Bromodichloromethane	ND		ug/l	1.0
trans-1,3-Dichloropropene	ND		ug/l	0.50
cis-1,3-Dichloropropene	ND		ug/l	0.50
1,1-Dichloropropene	ND		ug/l	2.0
Bromoform	ND		ug/l	2.0
1,1,2,2-Tetrachloroethane	ND		ug/l	1.0
Benzene	ND		ug/l	1.0
Toluene	ND		ug/l	1.0
Ethylbenzene	ND		ug/l	1.0
Chloromethane	ND		ug/l	2.0
Bromomethane	ND		ug/l	5.0
Vinyl chloride	ND		ug/l	1.0
Chloroethane	ND		ug/l	2.0
1,1-Dichloroethene	ND		ug/l	1.0
trans-1,2-Dichloroethene	ND		ug/l	1.0
Trichloroethene	ND		ug/l	1.0
1,2-Dichlorobenzene	ND		ug/l	1.0
1,3-Dichlorobenzene	ND		ug/l	1.0
1,4-Dichlorobenzene	ND		ug/l	1.0

Project Name: CITY OF NEW BEDFORD **Lab Number:** L1004994

Project Number: 115058 **Report Date:** 04/14/10

Method Blank Analysis
Batch Quality Control

Analytical Method: 60,8260B
Analytical Date: 04/08/10 10:36
Analyst: MM

Parameter	Result	Qualifier	Units	RDL
MCP Volatile Organics - Westborough Lab for sample(s): 01-03 Batch: WG407387-3				
Methyl tert butyl ether	ND		ug/l	2.0
p/m-Xylene	ND		ug/l	2.0
o-Xylene	ND		ug/l	1.0
cis-1,2-Dichloroethene	ND		ug/l	1.0
Dibromomethane	ND		ug/l	2.0
1,2,3-Trichloropropane	ND		ug/l	2.0
Styrene	ND		ug/l	1.0
Dichlorodifluoromethane	ND		ug/l	2.0
Acetone	ND		ug/l	5.0
Carbon disulfide	ND		ug/l	2.0
2-Butanone	ND		ug/l	5.0
4-Methyl-2-pentanone	ND		ug/l	5.0
2-Hexanone	ND		ug/l	5.0
Bromochloromethane	ND		ug/l	2.0
Tetrahydrofuran	ND		ug/l	10
2,2-Dichloropropane	ND		ug/l	2.0
1,2-Dibromoethane	ND		ug/l	2.0
1,3-Dichloropropane	ND		ug/l	2.0
1,1,1,2-Tetrachloroethane	ND		ug/l	1.0
Bromobenzene	ND		ug/l	2.0
n-Butylbenzene	ND		ug/l	2.0
sec-Butylbenzene	ND		ug/l	2.0
tert-Butylbenzene	ND		ug/l	2.0
o-Chlorotoluene	ND		ug/l	2.0
p-Chlorotoluene	ND		ug/l	2.0
1,2-Dibromo-3-chloropropane	ND		ug/l	5.0
Hexachlorobutadiene	ND		ug/l	0.60
Isopropylbenzene	ND		ug/l	2.0
p-Isopropyltoluene	ND		ug/l	2.0
Naphthalene	ND		ug/l	5.0
n-Propylbenzene	ND		ug/l	2.0

Project Name:	CITY OF NEW BEDFORD	**Lab Number:**	L1004994
Project Number:	115058	**Report Date:**	04/14/10

Method Blank Analysis
Batch Quality Control

Analytical Method: 60,8260B
Analytical Date: 04/08/10 10:36
Analyst: MM

Parameter	Result	Qualifier	Units	RDL
MCP Volatile Organics - Westborough Lab for sample(s): 01-03 Batch: WG407387-3				
1,2,3-Trichlorobenzene	ND		ug/l	2.0
1,2,4-Trichlorobenzene	ND		ug/l	2.0
1,3,5-Trimethylbenzene	ND		ug/l	2.0
1,2,4-Trimethylbenzene	ND		ug/l	2.0
Ethyl ether	ND		ug/l	2.0
Isopropyl Ether	ND		ug/l	2.0
Ethyl-Tert-Butyl-Ether	ND		ug/l	2.0
Tertiary-Amyl Methyl Ether	ND		ug/l	2.0
1,4-Dioxane	ND		ug/l	250

Surrogate	%Recovery	Qualifier	Acceptance Criteria
1,2-Dichloroethane-d4	106		70-130
Toluene-d8	103		70-130
4-Bromofluorobenzene	104		70-130
Dibromofluoromethane	98		70-130

Lab Control Sample Analysis
Batch Quality Control

Project Name: CITY OF NEW BEDFORD
Project Number: 115058

Lab Number: L1004994
Report Date: 04/14/10

Parameter	LCS %Recovery	Qual	LCSD %Recovery	Qual	%Recovery Limits	RPD	Qual	RPD Limits
MCP Volatile Organics - Westborough Lab Associated sample(s): 01-03 Batch: WG407387-1 WG407387-2								
Methylene chloride	102		106		70-130	4		25
1,1-Dichloroethane	90		90		70-130	0		25
Chloroform	91		90		70-130	1		25
Carbon tetrachloride	88		91		70-130	3		25
1,2-Dichloropropane	90		90		70-130	0		25
Dibromochloromethane	86		91		70-130	6		25
1,1,2-Trichloroethane	94		96		70-130	2		25
Tetrachloroethene	95		94		70-130	1		25
Chlorobenzene	95		95		70-130	0		25
Trichlorofluoromethane	89		90		70-130	1		25
1,2-Dichloroethane	95		97		70-130	2		25
1,1,1-Trichloroethane	89		94		70-130	5		25
Bromodichloromethane	102		106		70-130	4		25
trans-1,3-Dichloropropene	90		91		70-130	1		25
cis-1,3-Dichloropropene	79		87		70-130	10		25
1,1-Dichloropropene	96		93		70-130	3		25
Bromoform	85		99		70-130	15		50
1,1,2,2-Tetrachloroethane	92		96		70-130	4		25
Benzene	93		92		70-130	1		25
Toluene	95		97		70-130	2		25
Ethylbenzene	106		103		70-130	3		25

Lab Control Sample Analysis
Batch Quality Control

Project Name: CITY OF NEW BEDFORD
Project Number: 115058

Lab Number: L1004994
Report Date: 04/14/10

Parameter	LCS %Recovery	Qual	LCSD %Recovery	Qual	%Recovery Limits	RPD	Qual	RPD Limits
MCP Volatile Organics - Westborough Lab Associated sample(s): 01-03 Batch: WG407387-1 WG407387-2								
Chloromethane	94		95		70-130	1		50
Bromomethane	73		84		70-130	14		50
Vinyl chloride	104		104		70-130	0		25
Chloroethane	109		108		70-130	1		25
1,1-Dichloroethene	84		86		70-130	2		25
trans-1,2-Dichloroethene	86		85		70-130	1		25
Trichloroethene	85		85		70-130	0		25
1,2-Dichlorobenzene	98		103		70-130	5		25
1,3-Dichlorobenzene	100		102		70-130	2		25
1,4-Dichlorobenzene	99		103		70-130	4		25
Methyl tert butyl ether	85		86		70-130	1		25
p/m-Xylene	110		106		70-130	4		25
o-Xylene	106		105		70-130	1		25
cis-1,2-Dichloroethene	90		90		70-130	0		25
Dibromomethane	92		90		70-130	2		25
1,2,3-Trichloropropane	100		105		70-130	5		25
Styrene	104		100		70-130	4		25
Dichlorodifluoromethane	**60**	Q	**59**	Q	70-130	2		50
Acetone	119		112		70-130	6		50
Carbon disulfide	82		84		70-130	2		50
2-Butanone	87		96		70-130	10		50

Lab Control Sample Analysis
Batch Quality Control

Project Name: CITY OF NEW BEDFORD
Project Number: 115058
Lab Number: L1004994
Report Date: 04/14/10

Parameter	LCS %Recovery	Qual	LCSD %Recovery	Qual	%Recovery Limits	RPD	Qual	RPD Limits
MCP Volatile Organics - Westborough Lab Associated sample(s): 01-03 Batch: WG407387-1 WG407387-2								
4-Methyl-2-pentanone	86		92		70-130	7		50
2-Hexanone	97		100		70-130	3		50
Bromochloromethane	91		93		70-130	2		25
Tetrahydrofuran	84		89		70-130	6		25
2,2-Dichloropropane	98		102		70-130	4		50
1,2-Dibromoethane	94		92		70-130	2		25
1,3-Dichloropropane	90		87		70-130	3		25
1,1,1,2-Tetrachloroethane	95		97		70-130	2		25
Bromobenzene	95		98		70-130	3		25
n-Butylbenzene	97		101		70-130	4		25
sec-Butylbenzene	104		106		70-130	2		25
tert-Butylbenzene	100		100		70-130	0		25
o-Chlorotoluene	98		98		70-130	0		25
p-Chlorotoluene	101		101		70-130	0		25
1,2-Dibromo-3-chloropropane	104		110		70-130	6		50
Hexachlorobutadiene	88		97		70-130	10		25
Isopropylbenzene	108		104		70-130	4		25
p-Isopropyltoluene	98		101		70-130	3		25
Naphthalene	75		78		70-130	4		25
n-Propylbenzene	101		101		70-130	0		25
1,2,3-Trichlorobenzene	86		93		70-130	8		25

Lab Control Sample Analysis
Batch Quality Control

Project Name: CITY OF NEW BEDFORD
Project Number: 115058

Lab Number: L1004994
Report Date: 04/14/10

Parameter	LCS %Recovery	Qual	LCSD %Recovery	Qual	%Recovery Limits	RPD	Qual	RPD Limits
MCP Volatile Organics - Westborough Lab Associated sample(s): 01-03 Batch: WG407387-1 WG407387-2								
1,2,4-Trichlorobenzene	89		96		70-130	8		25
1,3,5-Trimethylbenzene	96		99		70-130	3		25
1,2,4-Trimethylbenzene	96		98		70-130	2		25
Ethyl ether	86		84		70-130	2		25
Isopropyl Ether	92		95		70-130	3		25
Ethyl-Tert-Butyl-Ether	94		96		70-130	2		25
Tertiary-Amyl Methyl Ether	92		95		70-130	3		25
1,4-Dioxane	71		79		70-130	11		50

Surrogate	LCS %Recovery	Qual	LCSD %Recovery	Qual	Acceptance Criteria
1,2-Dichloroethane-d4	101		101		70-130
Toluene-d8	103		102		70-130
4-Bromofluorobenzene	93		94		70-130
Dibromofluoromethane	94		91		70-130

Project Name: CITY OF NEW BEDFORD
Project Number: 115058

Lab Number: L1004994
Report Date: 04/14/10

Sample Receipt and Container Information

Were project specific reporting limits specified? YES

Cooler Information

Cooler	Custody Seal
A	Absent

VOA/VPH H2O Preservative Date: N/A

Container Information

Container ID	Container Type	Cooler	pH	Temp deg C	Pres	Seal	Analysis
L1004994-01A	Vial HCl preserved	A	N/A	2	Y	Absent	MCP-8260-04(14)
L1004994-01B	Vial HCl preserved	A	N/A	2	Y	Absent	MCP-8260-04(14)
L1004994-02A	Vial HCl preserved	A	N/A	2	Y	Absent	MCP-8260-04(14)
L1004994-02B	Vial HCl preserved	A	N/A	2	Y	Absent	MCP-8260-04(14)
L1004994-03A	Vial HCl preserved	A	N/A	2	Y	Absent	MCP-8260-04(14)

*Hold days indicated by values in parentheses

GLOSSARY

Acronyms

EPA - Environmental Protection Agency.

LCS - Laboratory Control Sample: A sample matrix, free from the analytes of interest, spiked with verified known amounts of analytes or a material containing known and verified amounts of analytes.

LCSD - Laboratory Control Sample Duplicate: Refer to LCS.

MS - Matrix Spike Sample: A sample prepared by adding a known mass of target analyte to a specified amount of matrix sample for which an independent estimate of target analyte concentration is available.

MSD - Matrix Spike Sample Duplicate: Refer to MS.

NA - Not Applicable.

NC - Not Calculated: Term is utilized when one or more of the results utilized in the calculation are non-detect at the parameter's reporting unit.

NI - Not Ignitable.

RDL - Reported Detection Limit: The value at which an instrument can accurately measure an analyte at a specific concentration. The RDL includes any adjustments from dilutions, concentrations or moisture content, where applicable.

RPD - Relative Percent Difference: The results from matrix and/or matrix spike duplicates are primarily designed to assess the precision of analytical results in a given matrix and are expressed as relative percent difference (RPD). Values which are less than five times the reporting limit for any individual parameter are evaluated by utilizing the absolute difference between the values; although the RPD value will be provided in the report.

Terms

Analytical Method: Both the document from which the method originates and the analytical reference method. (Example: EPA 8260B is shown as 1,8260B.) The codes for the reference method documents are provided in the References section of the Addendum.

Data Qualifiers

A - Spectra identified as "Aldol Condensation Product".

B - The analyte was detected above the reporting limit in the associated method blank. Flag only applies to associated field samples that have detectable concentrations of the analyte at less than five times (5x) the concentration found in the blank. For DOD-related projects, flag only applies to associated field samples that have detectable concentrations of the analyte at less than ten times (10x) the concentration found in the blank AND the analyte was detected above one-half the reporting limit (or above the reporting limit for common lab contaminants) in the associated method blank.

D - Concentration of analyte was quantified from diluted analysis. Flag only applies to field samples that have detectable concentrations of the analyte.

E - Concentration of analyte exceeds the range of the calibration curve and/or linear range of the instrument.

H - The analysis of pH was performed beyond the regulatory-required holding time of 15 minutes from the time of sample collection.

P - The RPD between the results for the two columns exceeds the method-specified criteria.

Q - The quality control sample exceeds the associated acceptance criteria. Note: This flag is not applicable for matrix spike recoveries when the sample concentration is greater than 4x the spike added or for batch duplicate RPD when the sample concentrations are less than 5x the RDL. (Metals only.)

R - Analytical results are from sample re-analysis.

RE - Analytical results are from sample re-extraction.

J - Estimated value. This represents an estimated concentration for Tentatively Identified Compounds (TICs).

ND - Not detected at the reported detection limit (RDL) for the sample.

Report Format: Data Usability Report

REFERENCES

60 Quality Assurance and Quality Control Requirements and Performance Standards for SW-846 Methods. MADEP BWSC. WSC-CAM-IIA (Revision 4), WSC-CAM-V C (Revision 2), WSC-CAM-IIIA (Revision 5). May 2004.

LIMITATION OF LIABILITIES

Alpha Analytical performs services with reasonable care and diligence normal to the analytical testing laboratory industry. In the event of an error, the sole and exclusive responsibility of Alpha Woods Hole Labs shall be to re-perform the work at it's own expense. In no event shall Alpha Analytical be held liable for any incidental, consequential or special damages, including but not limited to, damages in any way connected with the use of, interpretation of, information or analysis provided by Alpha Woods Hole Labs.

We strongly urge our clients to comply with EPA protocol regarding sample volume, preservation, cooling, containers, sampling procedures, holding time and splitting of samples in the field.

Certificate/Approval Program Summary

Last revised March 16, 2010 - Westboro Facility

The following list includes only those analytes/methods for which certification/approval is currently held.
For a complete listing of analytes for the referenced methods, please contact your Alpha Customer Service Representative.

Connecticut Department of Public Health Certificate/Lab ID: PH-0574. ***NELAP Accredited Solid Waste/Soil.***

Drinking Water (Inorganic Parameters: Color, pH, Turbidity, Conductivity, Alkalinity, Chloride, Free Residual Chlorine, Fluoride, Calcium Hardness, Sulfate, Nitrate, Nitrite, Aluminum, Antimony, Arsenic, Barium, Beryllium, Cadmium, Calcium, Chromium, Copper, Iron, Lead, Magnesium, Manganese, Mercury, Molybdenum, Nickel, Potassium, Selenium, Silver, Sodium, Thallium, Vanadium, Zinc, Total Dissolved Solids, Total Organic Carbon, Total Cyanide, Perchlorate. Organic Parameters: Haloacetic Acids, Volatile Organics 524.2, Total Trihalomethanes 524.2, 1,2-Dibromo-3-chloropropane (DBCP), Ethylene Dibromide (EDB).)
Wastewater/Non-Potable Water (Inorganic Parameters: Color, pH, Conductivity, Acidity, Alkalinity, Chloride, Total Residual Chlorine, Fluoride, Total Hardness, Calcium Hardness, Silica, Sulfate, Sulfide, Ammonia, Kjeldahl Nitrogen, Nitrate, Nitrite, O-Phosphate, Total Phosphorus, Aluminum, Antimony, Arsenic, Barium, Beryllium, Boron, Cadmium, Calcium, Chromium, Hexavalent Chromium, Cobalt, Copper, Iron, Lead, Magnesium, Manganese, Mercury, Molybdenum, Nickel, Potassium, Selenium, Silver, Sodium, Strontium, Thallium, Tin, Titanium, Vanadium, Zinc, Total Residue (Solids), Total Dissolved Solids, Total Suspended Solids (non-filterable), BOD, CBOD, COD, TOC, Total Cyanide, Phenolics, Foaming Agents (MBAS), Bromide, Oil and Grease. Organic Parameters: PCBs, Organochlorine Pesticides, Technical Chlordane, Toxaphene, 2,4-D, 2,4,5-T, 2,4,5-TP(Silvex), Acid Extractables (Phenols), Benzidines, Phthalate Esters, Nitrosamines, Nitroaromatics & Isophorone, Polynuclear Aromatic Hydrocarbons, Haloethers, Chlorinated Hydrocarbons, Volatile Organics, Extractable Petroleum Hydrocarbons (ETPH), MA-EPH, MA-VPH.)
Solid Waste/Soil (Inorganic Parameters: Lead in Paint, pH, Aluminum, Antimony, Arsenic, Barium, Beryllium, Boron, Cadmium, Calcium, Chromium, Hexavalent Chromium, Cobalt, Copper, Iron, Lead, Magnesium, Manganese, Mercury, Molybdenum, Nickel, Potassium, Selenium, Silver, Sodium, Thallium, Tin, Vanadium, Zinc, Total Cyanide, Ignitability, Phenolics, Corrosivity, TCLP Leach (1311), Reactivity. Organic Parameters: PCBs, Organochlorine Pesticides, Technical Chlordane, Toxaphene, Extractable Petroleum Hydrocarbons (ETPH), MA-EPH, MA-VPH, Dicamba, 2,4-D, 2,4,5-T, 2,4,5-TP(Silvex), Volatile Organics, Acid Extractables (Phenols), 3.3'-Dichlorobenzidine, Phthalates, Nitrosamines, Nitroaromatics & Cyclic Ketones, PAHs, Haloethers, Chlorinated Hydrocarbons.)

Maine Department of Human Services Certificate/Lab ID: 2009024.
Drinking Water (Inorganic Parameters: SM9215B, 9221E, 9222B, 9222D, 9223B, EPA 180.1, 300.0, 353.2, SM2130B, 2320B, 4500Cl-D, 4500CN-C, 4500CN-E, 4500F-C, 4500H+B,4500NO3-F, EPA 200.7, EPA 200.8, 245.1. Organic Parameters: 504.1, 524.2, SM 6251B.)
Wastewater/Non-Potable Water (Inorganic Parameters: EPA 120.1, 1664A, 350.1, 351.1, 353.2, 410.4, 420.1, Lachat 10-107-06-1-B, SM2320B, 2340B, 2510B, 2540C, 2540D, 426C, 4500Cl-D, 4500Cl-E, 4500CN-C, 4500CN-E, 4500F-B, 4500F-C, 4500H+B, 4500Norg-B, 4500Norg-C, 4500NH3-B, 4500NH3-G, 4500NH3-H, 4500NO3-F, 4500P-B.5, 4500P-E, 5210B, 5220D, 5310C, EPA 200.7, 200.8, 245.1. Organic Parameters: 608, 624.)

Massachusetts Department of Environmental Protection Certificate/Lab ID: M-MA086.
Drinking Water
Inorganic Parameters: (EPA 200.8 for: Sb,As,Ba,Be,Cd,Cr,Cu,Pb,Ni,Se,Tl)
(EPA 200.7 for: Ba,Be,Ca,Cd,Cr,Cu,Na,Ni) 245.1, (300.0 for: Nitrate-N, Fluoride, Sulfate)
353.2 for: Nitrate-N, Nitrite-N; SM4500NO3-F, 4500F-C, 4500CN-CE, EPA 180.1, SM2130B, SM4500Cl-D, 2320B, SM2540C, SM4500H-B.
Organic Parameters: (EPA 524.2 for: Trihalomethanes, Volatile Organics)
(504.1 for: 1,2-Dibromoethane, 1,2-Dibromo-3-Chloropropane), 314.0, 332.
Microbiology Parameters: SM9215B; ENZ. SUB. SM9223; MF-SM9222D
Non-Potable Water
Inorganic Parameters:, (EPA 200.8 for: Al,Sb,As,Be,Cd,Cr,Cu,Pb,Mn,Ni,Se,Ag,Tl,Zn)
(EPA 200.7 for: Al,Sb,As,Be,Cd,Cr,Co,Cu,Fe,Pb,Mn,Mo,Ni,Se,Ag,Sr,Ti,Tl, V,Zn,Ca,Mg,Na,K)
245.1, SM4500H,B, EPA 120.1, SM2510B, 2540C, 2540B, 2340B, 2320B, 4500CL-E, 4500F-BC, 426C, SM4500NH3-BH, (EPA 350.1 for: Ammonia-N), LACHAT 10-107-06-1-B for Ammonia-N, SM4500NO3-F, 353.2 for Nitrate-N, SM4500NH3-B,C-Titr, SM4500NH3-BC-NES, EPA 351.1, SM4500P-E, 4500P-B,E, 5220D, EPA 410.4, SM 5210B, 5310C, 4500CL-D, EPA 1664, SM14 510AC, EPA 420, SM4500-CN-CE, SM2540D.
Organic Parameters: (EPA 624 for Volatile Halocarbons, Volatile Aromatics)
(608 for: Chlordane, Aldrin, Dieldrin, DDD, DDE, DDT, Heptachlor, Heptachlor Epoxide, PCBs-Water), EPA 625 for SVOC Acid Extractables and SVOC Base/Neutral Extractables, 600/4-81-045-PCB-Oil

New Hampshire Department of Environmental Services Certificate/Lab ID: 200307. ***NELAP Accredited.***
Drinking Water (Inorganic Parameters: SM6215B, 9222B, 9223B Colilert, EPA 200.7, 200.8, 245.2, 120.1, 300.0, 314.0, SM4500CN-E, 4500H+B, 4500NO3-F, 2320B, 2510B, 2540C, 4500F-C, 5310C, 2120B, EPA 331.0. Organic Parameters: 504.1, 524.2, SM6251B.)
Non-Potable Water (Inorganic Parameters: SM9222D, 9221B, 9222B, 9221E-EC, EPA 200.7, 200.8, 245.1, 245.2, SW-846 6010B, 6020, 7196A, 7470A, SM3500-CR-D, EPA 120.1, 300.0, 350.1, 351.1, 353.2, 420.1, 1664A, SW-846 9010, 9030, 9040B, SM426C, SM2310B, 2540B, 2540D, 4500H+B, 4500NH3-H, 4500NH3-E, 4500NO2-B, 4500P-E, 4500-S2-D, 5210B, 2320B, 2540C, 4500F-C, 5310C, 5540C, LACHAT 10-117-07-1-B, LACHAT 10-107-06-1-B, LACHAT 10-107-04-1-C, LACHAT 10-107-04-1-J, LACHAT 10-117-07-1-A, SM4500CL-E, LACHAT 10-204-00-1-A, LACHAT 10-107-06-2-D. Organic Parameters: SW-846 3005A, 3015A, 3510C, 5030B, 8021B, 8260B, 8270C, 8330, EPA 624, 625, 608, SW-846 8082, 8081A.)
Solid & Chemical Materials (Inorganic Parameters: SW-846 6010B, 7196A, 7471A, 7.3.3.2, 7.3.4.2, 1010, 1030, 9010, 9012A, 9014, 9030B, 9040, 9045C, 9050C, 1311, 3005A, 3050B, 3051A. Organic Parameters: SW-846 3540C, 3545, 3580A, 5030B, 5035, 8021B, 8260B, 8270C, 8330, 8151A, 8082, 8081A.)

New Jersey Department of Environmental Protection Certificate/Lab ID: MA935. ***NELAP Accredited.***
Drinking Water (Inorganic Parameters: SM9222B, 9221E, 9223B, 9215B, 4500NO3-F, 4500F-C, EPA 300.0, 200.7, 2540C, 2320B, 314.0, SM2120B, 2510B, 5310C, SM4500H-B, EPA 200.8, 245.2. Organic Parameters: 504.1, SM6251B, 524.2.)
Non-Potable Water (Inorganic Parameters: SM5210B, EPA 410.4, SM5220D, 4500Cl-D, EPA 300.0, SM2120B, SM4500F-BC, EPA 200.7, 351.1, LACHAT 10-107-06-2-D, EPA 353.2, SM4500NO3-F, 4500NO2-B, EPA 1664A, SM5310B, C or D, 4500-PE, EPA 420.1, SM4500P-B5+E, 2540B, 2540C, 2540D, EPA 120.1, SM2510B, SM15 426C, SM9221CE, 9222D, 9221B, 9222B, 9215B, 2310B, 2320B, 4500NH3-H, 4500-S D, EPA 350.1, SM5210B, SW-846 3015, 6020, 7470A, 5540C, 4500H-B, EPA 200.8, SM3500Cr-D, EPA 245.1, 245.2, SW-846 9040B, 3005A, EPA 6010B, 7196A, SW-846 9010B, 9030B. Organic Parameters: SW-846 8260B, 8270C, 3510C, EPA 608, 624, 625, SW-846 5030B, 8021B, 8081A, 8082, 8151A, 8330, NJ OQA-QAM-025 Rev.7.)
Solid & Chemical Materials (Inorganic Parameters: SW-846 9040B, 3005A, 6010B, 7196A, 5030B, 9010B, 9030B, 1030, 1311, 3050B, 3051, 7471A, 9014, 9012A, 9045C, 9050A, 9065. Organic Parameters: SW-846 8021B, 8081A, 8082, 8151A, 8330, 8260B, 8270C, 1311, 1312, 3540C, 3545, 3550B, 3580A, 5035L, 5035H, NJ OQA-QAM-025 Rev.7.)

New York Department of Health Certificate/Lab ID: 11148. ***NELAP Accredited.***
Drinking Water (Inorganic Parameters: SM9223B, 9222B, 9215B, EPA 200.8, 200.7, 245.2, SM5310C, EPA 314.0, 332.0, SM2320B, EPA 300.0, SM2120B, 4500CN-E, 4500F-C, 4500H-B, 4500NO3-F, 2540C, EPA 120.1, SM 2510B. Organic Parameters: EPA 524.2, 504.1.)
Non-Potable Water (Inorganic Parameters: SM9221E, 9222D, 9221B, 9222B, 9215B, 5210B, EPA 410.4, SM5220D, 2310B-4a, 2320B, EPA 200.7, 300.0, LACHAT 10-117-07-1A or B, SM4500Cl-E, 4500F-C, SM15 426C, EPA 350.1, LACHAT 10-107-06-1-B, SM4500NH3-H, EPA 351.1, LACHAT 10-107-06-2, EPA 353.2, LACHAT 10-107-041-C, SM4500-NO3-F, 4500-NO2-B, 4500P-E, 2540C, 2540B, 2540D, EPA 200.8, EPA 6010B, 6020, EPA 7196A, S\M3500Cr-D, EPA 245.1, 245.2, 7470A, SM2120B, SM4500-CN-E LACHAT 10-204-00-1-A, EPA 9040B, SM4500-HB, EPA 1664A, SM5310C, EPA 420.1, SM14 510C, EPA 120.1, SM2510B, SM4500S-D, SM5540C, EPA 3005A, 3015. Organic Parameters: EPA 624, 8260B, 8270C, 625, 608, 8081A, 8151A, 8330, 8082, EPA 3510C, 5030B, 9010B, 9030B.)
Solid & Hazardous Waste (Inorganic Parameters: 1010, 1030, SW-846 Ch 7 Sec 7.3, EPA 6010B, 7196A, 7471A, 9012A, 9014, 9040B, 9045C, 9065, 9050, EPA 1311, 1312, 3005A, 3050B, 9010B, 9030B. Organic Parameters: EPA 8260B, 8270C, 8081A, 8151A, 8330, 8082, 3540C, 3545, 3546, 3580, 5030B, 5035.)

North Carolina Department of the Environment and Natural Resources Certificate/Lab ID : 666. Organic Parameters: MA-EPH, MA-VPH.

Pennsylvania Department of Environmental Protection Certificate/Lab ID : 68-03671. ***NELAP Accredited.***
Non-Potable Water (Organic Parameters: EPA 3510C, 5030B, 625, 624. 608, 8081A, 8082, 8151A, 8260B, 8270C, 8330)
Solid & Hazardous Waste (Inorganic Parameters: EPA 1010, 1030, 1311, 3050B, 3051, 6010B, EPA 7.3.3.2, EPA 7.3.4.2, 7196A, 7471A, 9010B, 9012A, 9014, 9040B, 9045C, 9050, 9065. Organic Parameters: 3540C, 3545, 3580A, 5035, 8021B, 8081A, 8082, 8151A, 8260B, 8270C, 8330)

Rhode Island Department of Health Certificate/Lab ID: LAO00065. ***NELAP Accredited via NY-DOH.***
Refer to MA-DEP Certificate for Potable and Non-Potable Water.
Refer to NY-DOH Certificate for Potable and Non-Potable Water.

Texas Commisson on Environmental Quality Certificate/Lab ID: T104704476-09-1. ***NELAP Accredited.***
Non-Potable Water (Inorganic Parameters: EPA 120.1, 1664, 200.7, 200.8, 245.1, 245.2, 300.0, 350.1, 351.1, 353.2, 376.2, 410.4, 420.1, 6010, 6020, 7196, 7470, 9040, SM 2120B, 2310B, 2320B, 2510B, 2540B, 2540C, 2540D, 426C, 4500CL-E, 4500CN-E, 4500F-C, 4500H+B, 4500NH3-H, 4500NO2B, 4500P-E, 4500 S2⁻D, 510C, 5210B, 5220D, 5310C, 5540C. Organic Parameters: EPA 608, 624, 625, 8081, 8082, 8151, 8260, 8270, 8330.)

Solid & Hazardous Waste (Inorganic Parameters: EPA 1311, 1312, 9012, 9014, 9040, 9045, 9050, 9065.)

Utah Department of Health Certificate/Lab ID: AAMA. ***NELAP Accredited.***
Non-Potable Water (Inorganic Parameters: Chloride EPA 300.0)

Department of Defense Certificate/Lab ID: L2217.
Drinking Water (Inorganic Parameters: SM 4500H-B. Organic Parameters: EPA 524.2, 504.1.)

Non-Potable Water (Inorganic Parameters: EPA 200.7, 200.8, 6010B, 6020, 245.1, 245.2, 7470A, 9040B, 300.0, 9251, 9038, 350.1, 353.2, 351.1, 314, 120.1, 9050A , 410.4, 9060, 1664, 420.1, LACHAT 10-107-06-1-B, SM 4500CN-E, 4500H-B, 4500CL-E, 4500F-BC, 4500SO4-E, 426C, 4500NH3-B, 4500NH3-H, 4500NO3-F, 4500NO2-B, 4500Norg-C, 4500PE, 2510B, 5540C, 5220D, 5310C, 2540B, 2540C, 2540D, 510C, 4500S2-AD, 3005A, 3015, 9010B, 9030B. Organic Parameters: EPA 8260B, 8270C, 8330, 625, 8082, 8151A, 8081A, 3510C, 5030B.)

Solid & Hazardous Waste (Inorganic Parameters: EPA 200.7, 6010B, 7471A, 9040B, 9045C, 9065, 420.1, 9012A, 6860, 1311, 1312, 3050B, 9030B, 3051, 9010B, 3540C, SM 510ABC, 4500CN-CE, 2540G, SW-846 7.3, Organic Parameters: EPA 8260B, 8270C, 8330, 8082, 8081A, 8151A, 3545, 3546, 3580, 5035.)

Analytes Not Accredited by NELAP
Certification is not available by NELAP for the following analytes: **EPA 8260B:** Freon-113, 1,2,4,5-Tetramethylbenzene, 4-Ethyltoluene. **EPA 8330A:** PETN, Picric Acid, Nitroglycerine, 2,6-DANT, 2,4-DANT. **EPA 8270C:** Methyl naphthalene, Dimethyl naphthalene, Total Methylnapthalenes, Total Dimethylnaphthalenes, 1,4-Diphenylhydrazine (Azobenzene). **EPA 625:** 4-Chloroaniline. **EPA 350.1** for Ammonia in a Soil matrix.

CHAIN OF CUSTODY

PAGE ____ OF ____

Date Rec'd in Lab: 4/7/10

ALPHA Job #: L1004994

WESTBORO, MA
TEL: 508-898-9220
FAX: 508-898-9193

MANSFIELD, MA
TEL: 508-822-9300
FAX: 508-822-3288

Client Information

Client: TRC
Address: 650 Suffolk St
Lowell MA 01854
Phone: 978-970-5600
Fax: 978-453-1995
Email: dsullivan@TRCsolutions.com

☐ These samples have been previously analyzed by Alpha

Project Information

Project Name: City of New Bedford
Project Location: NBHS
Project #: 115058
Project Manager: David Sullivan
ALPHA Quote #: 2009 630

Turn-Around Time

☒ Standard 5 day ☐ RUSH (only confirmed if pre-approved!)

Date Due: 4/14/10 Time:

Report Information - Data Deliverables

☐ FAX ☒ EMAIL
☐ ADEx ☐ Add'l Deliverables

Billing Information

☐ Same as Client info PO #: 22520

Regulatory Requirements/Report Limits

State/Fed Program MCP/GW-1,2,3 Criteria

MA MCP PRESUMPTIVE CERTAINTY --- CT REASONABLE CONFIDENCE PROTO

☒ Yes ☐ No Are MCP Analytical Methods Required?
☒ Yes ☐ No Is Matrix Spike (MS) Required on this SDG? (If yes see note in Comments)
☐ Yes ☒ No Are CT RCP (Reasonable Confidence Protocols) Required?

Other Project Specific Requirements/Comments/Detection Limits:

If MS is required, indicate in Sample Specific Comments which samples and what tests MS to be performed.
(Note: All *CAM* methods for inorganic analyses require MS every 20 soil samples)

ANALYSIS: VOC's (8260 + TO 15 LIST)

SAMPLE HANDLING
Filtration ____
☐ Done
☐ Not needed
☐ Lab to do
Preservation
☐ Lab to do
(Please specify below)

ALPHA Lab ID (Lab Use Only)	Sample ID	Collection Date	Collection Time	Sample Matrix	Sampler's Initials	VOC's (8260 + TO 15 LIST)	Sample Specific Comments	TOTAL # BOTTLES
04994.1	MW-7	4/7/10	1305	GW	AW	X		
2	MW-11	↓	1333	GW	JG	X		
3	Trip Blank							

PLEASE ANSWER QUESTIONS ABOVE!

IS YOUR PROJECT MA MCP *or* CT RCP?

Container Type	V
Preservative	B

Relinquished By	Date/Time	Received By	Date/Time
[signature]	4/7/10 1435	[signature]	4/7/10 1440
[signature]	4/7/10 1900	[signature]	4/7/10 1900

Please print clearly, legibly and completely. Samples can not be logged in and turnaround time clock will not start until any ambiguities are resolved. All samples submitted are subject to Alpha's Terms and Conditions. See reverse side.

FORM NO: 01-01 (rev. 18-Jan-2010)

ANALYTICAL REPORT

Lab Number:	L1005083
Client:	TRC Environmental Consultants Wannalancit Mills 650 Suffolk Street Lowell, MA 01854
ATTN:	David Sullivan
Phone:	(978) 656-3565
Project Name:	CITY OF NEW BEDFORD
Project Number:	115058
Report Date:	04/15/10

Certifications & Approvals: MA (M-MA086), NY NELAC (11148), CT (PH-0574), NH (2003), NJ (MA935), RI (LAO00065), ME (MA0086), PA (Registration #68-03671), USDA (Permit #S-72578), US Army Corps of Engineers, Naval FESC.

Eight Walkup Drive, Westborough, MA 01581-1019
508-898-9220 (Fax) 508-898-9193 800-624-9220 - www.alphalab.com

Project Name: CITY OF NEW BEDFORD
Project Number: 115058

Lab Number: L1005083
Report Date: 04/15/10

Alpha Sample ID	Client ID	Sample Location	Collection Date/Time
L1005083-01	MW-122	NBHS	04/08/10 08:25
L1005083-02	MW-22	NBHS	04/08/10 09:25
L1005083-03	MW-21	NBHS	04/08/10 10:50
L1005083-04	MW-23	NBHS	04/08/10 12:10
L1005083-05	MW-20	NBHS	04/08/10 13:45
L1005083-06	MW-5	NBHS	04/08/10 13:55
L1005083-07	TRIP BLANK	NBHS	04/08/10 00:00

Project Name:	CITY OF NEW BEDFORD	**Lab Number:**	L1005083
Project Number:	115058	**Report Date:**	04/15/10

MADEP MCP Response Action Analytical Report Certification

This form provides certifications for all samples performed by MCP methods. Please refer to the Sample Results and Container Information sections of this report for specification of MCP methods used for each analysis. The following questions pertain only to MCP Analytical Methods.

An affirmative response to questions A, B, C & D is required for "Presumptive Certainty" status		
A	Were all samples received by the laboratory in a condition consistent with those described on their Chain-of-Custody documentation for the data set?	YES
B	Were all QA/QC procedures required for the specified analytical methods(s) included in this report followed, including the requirement to note and discuss in a narrative QC data that did not meet appropriate performance standards or guidelines?	YES
C	Does the analytical data included in this report meet all the requirements for "Presumptive Certainty", as described in section 2.0 of the MADEP document CAM VII A, "Quality Assurance and Quality Control Guidelines for the Acquisition and Reporting of Analytical Data"?	YES
D	VPH and EPH methods only: Was the VPH or EPH method run without significant modifications, as specified in Section 11.3?	N/A

A response to questions E and F is required for "Presumptive Certainty" status		
E	Were all QC performance standards and recommendations for the specified method(s) achieved?	NO
F	Were results for all analyte-list compounds/elements for the specified method(s) reported?	YES

For any questions answered "No", please refer to the case narrative section on the following page(s).

Please note that sample matrix information is located in the Sample Results section of this report.

Case Narrative

The samples were received in accordance with the Chain of Custody and no significant deviations were encountered during the preparation or analysis unless otherwise noted. Sample Receipt, Container Information, and the Chain of Custody are located at the back of the report.

Results contained within this report relate only to the samples submitted under this Alpha Lab Number and meet all of the requirements of NELAC, for all NELAC accredited parameters. The data presented in this report is organized by parameter (i.e. VOC, SVOC, etc.). Sample specific Quality Control data (i.e. Surrogate Spike Recovery) is reported at the end of the target analyte list for each individual sample, followed by the Laboratory Batch Quality Control at the end of each parameter. If a sample was re-analyzed or re-extracted due to a required quality control corrective action and if both sets of data are reported, the Laboratory ID of the re-analysis or re-extraction is designated with an "R" or "RE", respectively. When multiple Batch Quality Control elements are reported (e.g. more than one LCS), the associated samples for each element are noted in the grey shaded header line of each data table. Any Laboratory Batch, Sample Specific % recovery or RPD value that is outside the listed Acceptance Criteria is bolded in the report. Definitions of all data qualifiers and acronyms used in this report are provided in the Glossary located at the back of the report.

Please see the associated ADEx data file for a comparison of laboratory reporting limits that were achieved with the regulatory Numerical Standards requested on the Chain of Custody.

For additional information, please contact Client Services at 800-624-9220.

MCP Related Narratives

Volatile Organics

L1005083-05 and -06 were processed against a calibration curve that utilized a quadratic fit for 1,1,1-Trichloroethane, 2,2-Dichloropropane, Carbon tetrachloride, cis-1,3-Dichloropropene, trans-1,3-Dichloropropene, 2-Hexanone, Dibromochloromethane, 1,2-Dibromoethane, 1,1,1,2-Tetrachloroethane, n-Butylbenzene, Bromoform, Hexachlorobutadiene, Naphthalene and 1,2,3-Trichlorobenzene.

In reference to question E:

The WG408035-1/-2 LCS/LCSD recoveries, associated with L1005083-01 through -04 and -07, are outside the acceptance criteria for several compounds; however, they have been identified as "difficult" analytes. The results of the associated samples are reported; however, all results are considered to have a potentially high bias for Bromoform (139%/146%) and Acetone (LCSD at 134%) and a potentially low bias for

Case Narrative (continued)

Dichlorodifluoromethane (58%/59%) and 1,4-Dioxane (LCS at 67%).

The WG408035-1 LCS recovery, associated with L1005083-01 through -04 and -07, was above the acceptance criteria for Chloroethane (141%); however, the associated samples were non-detect for this target compound. The results of the original analysis are reported.

The WG408115-1/-2 LCS/LCSD recoveries, associated with L1005083-05 and -06, are below the acceptance criteria for Dichlorodifluoromethane (58%/56%); however, it has been identified as a "difficult" analyte. The results of the associated samples are reported; however, all results are considered to have a potentially low bias for this compound.

I, the undersigned, attest under the pains and penalties of perjury that, to the best of my knowledge and belief and based upon my personal inquiry of those responsible for providing the information contained in this analytical report, such information is accurate and complete. This certificate of analysis is not complete unless this page accompanies any and all pages of this report.

Authorized Signature: Michelle M. Morris

Title: Technical Director/Representative Date: 04/15/10

ORGANICS

VOLATILES

Project Name:	CITY OF NEW BEDFORD	**Lab Number:**	L1005083
Project Number:	115058	**Report Date:**	04/15/10

SAMPLE RESULTS

Lab ID:	L1005083-01	Date Collected:	04/08/10 08:25
Client ID:	MW-122	Date Received:	04/08/10
Sample Location:	NBHS	Field Prep:	Not Specified
Matrix:	Water		
Analytical Method:	60,8260B		
Analytical Date:	04/13/10 16:07		
Analyst:	MM		

Parameter	Result	Qualifier	Units	RDL	Dilution Factor
MCP Volatile Organics - Westborough Lab					
Methylene chloride	ND		ug/l	5.0	1
1,1-Dichloroethane	ND		ug/l	1.0	1
Chloroform	ND		ug/l	1.0	1
Carbon tetrachloride	ND		ug/l	1.0	1
1,2-Dichloropropane	ND		ug/l	1.0	1
Dibromochloromethane	ND		ug/l	1.0	1
1,1,2-Trichloroethane	ND		ug/l	1.0	1
Tetrachloroethene	ND		ug/l	1.0	1
Chlorobenzene	ND		ug/l	1.0	1
Trichlorofluoromethane	ND		ug/l	2.0	1
1,2-Dichloroethane	ND		ug/l	1.0	1
1,1,1-Trichloroethane	ND		ug/l	1.0	1
Bromodichloromethane	ND		ug/l	1.0	1
trans-1,3-Dichloropropene	ND		ug/l	0.50	1
cis-1,3-Dichloropropene	ND		ug/l	0.50	1
1,1-Dichloropropene	ND		ug/l	2.0	1
Bromoform	ND		ug/l	2.0	1
1,1,2,2-Tetrachloroethane	ND		ug/l	1.0	1
Benzene	ND		ug/l	1.0	1
Toluene	ND		ug/l	1.0	1
Ethylbenzene	ND		ug/l	1.0	1
Chloromethane	ND		ug/l	2.0	1
Bromomethane	ND		ug/l	5.0	1
Vinyl chloride	ND		ug/l	1.0	1
Chloroethane	ND		ug/l	2.0	1
1,1-Dichloroethene	ND		ug/l	1.0	1
trans-1,2-Dichloroethene	ND		ug/l	1.0	1
Trichloroethene	ND		ug/l	1.0	1
1,2-Dichlorobenzene	ND		ug/l	1.0	1
1,3-Dichlorobenzene	ND		ug/l	1.0	1

Project Name:	CITY OF NEW BEDFORD	**Lab Number:**	L1005083
Project Number:	115058	**Report Date:**	04/15/10

SAMPLE RESULTS

Lab ID:	L1005083-01	Date Collected:	04/08/10 08:25
Client ID:	MW-122	Date Received:	04/08/10
Sample Location:	NBHS	Field Prep:	Not Specified

Parameter	Result	Qualifier	Units	RDL	Dilution Factor
MCP Volatile Organics - Westborough Lab					
1,4-Dichlorobenzene	ND		ug/l	1.0	1
Methyl tert butyl ether	ND		ug/l	2.0	1
p/m-Xylene	ND		ug/l	2.0	1
o-Xylene	ND		ug/l	1.0	1
cis-1,2-Dichloroethene	ND		ug/l	1.0	1
Dibromomethane	ND		ug/l	2.0	1
1,2,3-Trichloropropane	ND		ug/l	2.0	1
Styrene	ND		ug/l	1.0	1
Dichlorodifluoromethane	ND		ug/l	2.0	1
Acetone	ND		ug/l	5.0	1
Carbon disulfide	ND		ug/l	2.0	1
2-Butanone	ND		ug/l	5.0	1
4-Methyl-2-pentanone	ND		ug/l	5.0	1
2-Hexanone	ND		ug/l	5.0	1
Bromochloromethane	ND		ug/l	2.0	1
Tetrahydrofuran	ND		ug/l	10	1
2,2-Dichloropropane	ND		ug/l	2.0	1
1,2-Dibromoethane	ND		ug/l	2.0	1
1,3-Dichloropropane	ND		ug/l	2.0	1
1,1,1,2-Tetrachloroethane	ND		ug/l	1.0	1
Bromobenzene	ND		ug/l	2.0	1
n-Butylbenzene	ND		ug/l	2.0	1
sec-Butylbenzene	ND		ug/l	2.0	1
tert-Butylbenzene	ND		ug/l	2.0	1
o-Chlorotoluene	ND		ug/l	2.0	1
p-Chlorotoluene	ND		ug/l	2.0	1
1,2-Dibromo-3-chloropropane	ND		ug/l	5.0	1
Hexachlorobutadiene	ND		ug/l	0.60	1
Isopropylbenzene	ND		ug/l	2.0	1
p-Isopropyltoluene	6.2		ug/l	2.0	1
Naphthalene	ND		ug/l	5.0	1
n-Propylbenzene	ND		ug/l	2.0	1
1,2,3-Trichlorobenzene	ND		ug/l	2.0	1
1,2,4-Trichlorobenzene	ND		ug/l	2.0	1
1,3,5-Trimethylbenzene	ND		ug/l	2.0	1
1,2,4-Trimethylbenzene	ND		ug/l	2.0	1
Ethyl ether	ND		ug/l	2.0	1

SAMPLE RESULTS

Lab ID:	L1005083-01	Date Collected:	04/08/10 08:25
Client ID:	MW-122	Date Received:	04/08/10
Sample Location:	NBHS	Field Prep:	Not Specified

Parameter	Result	Qualifier	Units	RDL	Dilution Factor
MCP Volatile Organics - Westborough Lab					
Isopropyl Ether	ND		ug/l	2.0	1
Ethyl-Tert-Butyl-Ether	ND		ug/l	2.0	1
Tertiary-Amyl Methyl Ether	ND		ug/l	2.0	1
1,4-Dioxane	ND		ug/l	250	1

Surrogate	% Recovery	Qualifier	Acceptance Criteria
1,2-Dichloroethane-d4	100		70-130
Toluene-d8	100		70-130
4-Bromofluorobenzene	93		70-130
Dibromofluoromethane	105		70-130

Project Name:	CITY OF NEW BEDFORD	**Lab Number:**	L1005083
Project Number:	115058	**Report Date:**	04/15/10

SAMPLE RESULTS

Lab ID:	L1005083-02	Date Collected:	04/08/10 09:25
Client ID:	MW-22	Date Received:	04/08/10
Sample Location:	NBHS	Field Prep:	Not Specified
Matrix:	Water		
Analytical Method:	60,8260B		
Analytical Date:	04/13/10 16:41		
Analyst:	MM		

Parameter	Result	Qualifier	Units	RDL	Dilution Factor
MCP Volatile Organics - Westborough Lab					
Methylene chloride	ND		ug/l	5.0	1
1,1-Dichloroethane	ND		ug/l	1.0	1
Chloroform	ND		ug/l	1.0	1
Carbon tetrachloride	ND		ug/l	1.0	1
1,2-Dichloropropane	ND		ug/l	1.0	1
Dibromochloromethane	ND		ug/l	1.0	1
1,1,2-Trichloroethane	ND		ug/l	1.0	1
Tetrachloroethene	ND		ug/l	1.0	1
Chlorobenzene	ND		ug/l	1.0	1
Trichlorofluoromethane	ND		ug/l	2.0	1
1,2-Dichloroethane	ND		ug/l	1.0	1
1,1,1-Trichloroethane	ND		ug/l	1.0	1
Bromodichloromethane	ND		ug/l	1.0	1
trans-1,3-Dichloropropene	ND		ug/l	0.50	1
cis-1,3-Dichloropropene	ND		ug/l	0.50	1
1,1-Dichloropropene	ND		ug/l	2.0	1
Bromoform	ND		ug/l	2.0	1
1,1,2,2-Tetrachloroethane	ND		ug/l	1.0	1
Benzene	ND		ug/l	1.0	1
Toluene	ND		ug/l	1.0	1
Ethylbenzene	ND		ug/l	1.0	1
Chloromethane	ND		ug/l	2.0	1
Bromomethane	ND		ug/l	5.0	1
Vinyl chloride	ND		ug/l	1.0	1
Chloroethane	ND		ug/l	2.0	1
1,1-Dichloroethene	ND		ug/l	1.0	1
trans-1,2-Dichloroethene	ND		ug/l	1.0	1
Trichloroethene	ND		ug/l	1.0	1
1,2-Dichlorobenzene	ND		ug/l	1.0	1
1,3-Dichlorobenzene	ND		ug/l	1.0	1

Project Name:	CITY OF NEW BEDFORD	**Lab Number:**	L1005083
Project Number:	115058	**Report Date:**	04/15/10

SAMPLE RESULTS

Lab ID:	L1005083-02	Date Collected:	04/08/10 09:25
Client ID:	MW-22	Date Received:	04/08/10
Sample Location:	NBHS	Field Prep:	Not Specified

Parameter	Result	Qualifier	Units	RDL	Dilution Factor
MCP Volatile Organics - Westborough Lab					
1,4-Dichlorobenzene	ND		ug/l	1.0	1
Methyl tert butyl ether	ND		ug/l	2.0	1
p/m-Xylene	ND		ug/l	2.0	1
o-Xylene	ND		ug/l	1.0	1
cis-1,2-Dichloroethene	ND		ug/l	1.0	1
Dibromomethane	ND		ug/l	2.0	1
1,2,3-Trichloropropane	ND		ug/l	2.0	1
Styrene	ND		ug/l	1.0	1
Dichlorodifluoromethane	ND		ug/l	2.0	1
Acetone	ND		ug/l	5.0	1
Carbon disulfide	ND		ug/l	2.0	1
2-Butanone	ND		ug/l	5.0	1
4-Methyl-2-pentanone	ND		ug/l	5.0	1
2-Hexanone	ND		ug/l	5.0	1
Bromochloromethane	ND		ug/l	2.0	1
Tetrahydrofuran	ND		ug/l	10	1
2,2-Dichloropropane	ND		ug/l	2.0	1
1,2-Dibromoethane	ND		ug/l	2.0	1
1,3-Dichloropropane	ND		ug/l	2.0	1
1,1,1,2-Tetrachloroethane	ND		ug/l	1.0	1
Bromobenzene	ND		ug/l	2.0	1
n-Butylbenzene	ND		ug/l	2.0	1
sec-Butylbenzene	ND		ug/l	2.0	1
tert-Butylbenzene	ND		ug/l	2.0	1
o-Chlorotoluene	ND		ug/l	2.0	1
p-Chlorotoluene	ND		ug/l	2.0	1
1,2-Dibromo-3-chloropropane	ND		ug/l	5.0	1
Hexachlorobutadiene	ND		ug/l	0.60	1
Isopropylbenzene	ND		ug/l	2.0	1
p-Isopropyltoluene	6.2		ug/l	2.0	1
Naphthalene	ND		ug/l	5.0	1
n-Propylbenzene	ND		ug/l	2.0	1
1,2,3-Trichlorobenzene	ND		ug/l	2.0	1
1,2,4-Trichlorobenzene	ND		ug/l	2.0	1
1,3,5-Trimethylbenzene	ND		ug/l	2.0	1
1,2,4-Trimethylbenzene	ND		ug/l	2.0	1
Ethyl ether	ND		ug/l	2.0	1

Project Name:	CITY OF NEW BEDFORD	**Lab Number:**	L1005083
Project Number:	115058	**Report Date:**	04/15/10

SAMPLE RESULTS

Lab ID:	L1005083-02	Date Collected:	04/08/10 09:25
Client ID:	MW-22	Date Received:	04/08/10
Sample Location:	NBHS	Field Prep:	Not Specified

Parameter	Result	Qualifier	Units	RDL	Dilution Factor
MCP Volatile Organics - Westborough Lab					
Isopropyl Ether	ND		ug/l	2.0	1
Ethyl-Tert-Butyl-Ether	ND		ug/l	2.0	1
Tertiary-Amyl Methyl Ether	ND		ug/l	2.0	1
1,4-Dioxane	ND		ug/l	250	1

Surrogate	% Recovery	Qualifier	Acceptance Criteria
1,2-Dichloroethane-d4	100		70-130
Toluene-d8	98		70-130
4-Bromofluorobenzene	98		70-130
Dibromofluoromethane	102		70-130

Project Name:	CITY OF NEW BEDFORD	**Lab Number:**	L1005083
Project Number:	115058	**Report Date:**	04/15/10

SAMPLE RESULTS

Lab ID:	L1005083-03	Date Collected:	04/08/10 10:50
Client ID:	MW-21	Date Received:	04/08/10
Sample Location:	NBHS	Field Prep:	Not Specified
Matrix:	Water		
Analytical Method:	60,8260B		
Analytical Date:	04/13/10 17:15		
Analyst:	MM		

Parameter	Result	Qualifier	Units	RDL	Dilution Factor
MCP Volatile Organics - Westborough Lab					
Methylene chloride	ND		ug/l	5.0	1
1,1-Dichloroethane	ND		ug/l	1.0	1
Chloroform	ND		ug/l	1.0	1
Carbon tetrachloride	ND		ug/l	1.0	1
1,2-Dichloropropane	ND		ug/l	1.0	1
Dibromochloromethane	ND		ug/l	1.0	1
1,1,2-Trichloroethane	ND		ug/l	1.0	1
Tetrachloroethene	ND		ug/l	1.0	1
Chlorobenzene	ND		ug/l	1.0	1
Trichlorofluoromethane	ND		ug/l	2.0	1
1,2-Dichloroethane	ND		ug/l	1.0	1
1,1,1-Trichloroethane	ND		ug/l	1.0	1
Bromodichloromethane	ND		ug/l	1.0	1
trans-1,3-Dichloropropene	ND		ug/l	0.50	1
cis-1,3-Dichloropropene	ND		ug/l	0.50	1
1,1-Dichloropropene	ND		ug/l	2.0	1
Bromoform	ND		ug/l	2.0	1
1,1,2,2-Tetrachloroethane	ND		ug/l	1.0	1
Benzene	ND		ug/l	1.0	1
Toluene	ND		ug/l	1.0	1
Ethylbenzene	ND		ug/l	1.0	1
Chloromethane	ND		ug/l	2.0	1
Bromomethane	ND		ug/l	5.0	1
Vinyl chloride	ND		ug/l	1.0	1
Chloroethane	ND		ug/l	2.0	1
1,1-Dichloroethene	ND		ug/l	1.0	1
trans-1,2-Dichloroethene	ND		ug/l	1.0	1
Trichloroethene	ND		ug/l	1.0	1
1,2-Dichlorobenzene	ND		ug/l	1.0	1
1,3-Dichlorobenzene	ND		ug/l	1.0	1

Project Name: CITY OF NEW BEDFORD **Lab Number:** L1005083

Project Number: 115058 **Report Date:** 04/15/10

SAMPLE RESULTS

Lab ID: L1005083-03 Date Collected: 04/08/10 10:50

Client ID: MW-21 Date Received: 04/08/10

Sample Location: NBHS Field Prep: Not Specified

Parameter	Result	Qualifier	Units	RDL	Dilution Factor
MCP Volatile Organics - Westborough Lab					
1,4-Dichlorobenzene	ND		ug/l	1.0	1
Methyl tert butyl ether	ND		ug/l	2.0	1
p/m-Xylene	ND		ug/l	2.0	1
o-Xylene	ND		ug/l	1.0	1
cis-1,2-Dichloroethene	ND		ug/l	1.0	1
Dibromomethane	ND		ug/l	2.0	1
1,2,3-Trichloropropane	ND		ug/l	2.0	1
Styrene	ND		ug/l	1.0	1
Dichlorodifluoromethane	ND		ug/l	2.0	1
Acetone	ND		ug/l	5.0	1
Carbon disulfide	ND		ug/l	2.0	1
2-Butanone	ND		ug/l	5.0	1
4-Methyl-2-pentanone	ND		ug/l	5.0	1
2-Hexanone	ND		ug/l	5.0	1
Bromochloromethane	ND		ug/l	2.0	1
Tetrahydrofuran	ND		ug/l	10	1
2,2-Dichloropropane	ND		ug/l	2.0	1
1,2-Dibromoethane	ND		ug/l	2.0	1
1,3-Dichloropropane	ND		ug/l	2.0	1
1,1,1,2-Tetrachloroethane	ND		ug/l	1.0	1
Bromobenzene	ND		ug/l	2.0	1
n-Butylbenzene	ND		ug/l	2.0	1
sec-Butylbenzene	ND		ug/l	2.0	1
tert-Butylbenzene	ND		ug/l	2.0	1
o-Chlorotoluene	ND		ug/l	2.0	1
p-Chlorotoluene	ND		ug/l	2.0	1
1,2-Dibromo-3-chloropropane	ND		ug/l	5.0	1
Hexachlorobutadiene	ND		ug/l	0.60	1
Isopropylbenzene	ND		ug/l	2.0	1
p-Isopropyltoluene	ND		ug/l	2.0	1
Naphthalene	ND		ug/l	5.0	1
n-Propylbenzene	ND		ug/l	2.0	1
1,2,3-Trichlorobenzene	ND		ug/l	2.0	1
1,2,4-Trichlorobenzene	ND		ug/l	2.0	1
1,3,5-Trimethylbenzene	ND		ug/l	2.0	1
1,2,4-Trimethylbenzene	ND		ug/l	2.0	1
Ethyl ether	ND		ug/l	2.0	1

Project Name:	CITY OF NEW BEDFORD	**Lab Number:**	L1005083
Project Number:	115058	**Report Date:**	04/15/10

SAMPLE RESULTS

Lab ID:	L1005083-03	Date Collected:	04/08/10 10:50
Client ID:	MW-21	Date Received:	04/08/10
Sample Location:	NBHS	Field Prep:	Not Specified

Parameter	Result	Qualifier	Units	RDL	Dilution Factor
MCP Volatile Organics - Westborough Lab					
Isopropyl Ether	ND		ug/l	2.0	1
Ethyl-Tert-Butyl-Ether	ND		ug/l	2.0	1
Tertiary-Amyl Methyl Ether	ND		ug/l	2.0	1
1,4-Dioxane	ND		ug/l	250	1

Surrogate	% Recovery	Qualifier	Acceptance Criteria
1,2-Dichloroethane-d4	104		70-130
Toluene-d8	97		70-130
4-Bromofluorobenzene	101		70-130
Dibromofluoromethane	104		70-130

Project Name:	CITY OF NEW BEDFORD	**Lab Number:**	L1005083
Project Number:	115058	**Report Date:**	04/15/10

SAMPLE RESULTS

Lab ID:	L1005083-04	Date Collected:	04/08/10 12:10
Client ID:	MW-23	Date Received:	04/08/10
Sample Location:	NBHS	Field Prep:	Not Specified
Matrix:	Water		
Analytical Method:	60,8260B		
Analytical Date:	04/13/10 17:49		
Analyst:	MM		

Parameter	Result	Qualifier	Units	RDL	Dilution Factor
MCP Volatile Organics - Westborough Lab					
Methylene chloride	ND		ug/l	5.0	1
1,1-Dichloroethane	ND		ug/l	1.0	1
Chloroform	ND		ug/l	1.0	1
Carbon tetrachloride	ND		ug/l	1.0	1
1,2-Dichloropropane	ND		ug/l	1.0	1
Dibromochloromethane	ND		ug/l	1.0	1
1,1,2-Trichloroethane	ND		ug/l	1.0	1
Tetrachloroethene	ND		ug/l	1.0	1
Chlorobenzene	ND		ug/l	1.0	1
Trichlorofluoromethane	ND		ug/l	2.0	1
1,2-Dichloroethane	ND		ug/l	1.0	1
1,1,1-Trichloroethane	ND		ug/l	1.0	1
Bromodichloromethane	ND		ug/l	1.0	1
trans-1,3-Dichloropropene	ND		ug/l	0.50	1
cis-1,3-Dichloropropene	ND		ug/l	0.50	1
1,1-Dichloropropene	ND		ug/l	2.0	1
Bromoform	ND		ug/l	2.0	1
1,1,2,2-Tetrachloroethane	ND		ug/l	1.0	1
Benzene	ND		ug/l	1.0	1
Toluene	ND		ug/l	1.0	1
Ethylbenzene	ND		ug/l	1.0	1
Chloromethane	ND		ug/l	2.0	1
Bromomethane	ND		ug/l	5.0	1
Vinyl chloride	ND		ug/l	1.0	1
Chloroethane	ND		ug/l	2.0	1
1,1-Dichloroethene	ND		ug/l	1.0	1
trans-1,2-Dichloroethene	ND		ug/l	1.0	1
Trichloroethene	ND		ug/l	1.0	1
1,2-Dichlorobenzene	ND		ug/l	1.0	1
1,3-Dichlorobenzene	ND		ug/l	1.0	1

Project Name:	CITY OF NEW BEDFORD	**Lab Number:**	L1005083
Project Number:	115058	**Report Date:**	04/15/10

SAMPLE RESULTS

Lab ID:	L1005083-04	Date Collected:	04/08/10 12:10
Client ID:	MW-23	Date Received:	04/08/10
Sample Location:	NBHS	Field Prep:	Not Specified

Parameter	Result	Qualifier	Units	RDL	Dilution Factor
MCP Volatile Organics - Westborough Lab					
1,4-Dichlorobenzene	ND		ug/l	1.0	1
Methyl tert butyl ether	ND		ug/l	2.0	1
p/m-Xylene	ND		ug/l	2.0	1
o-Xylene	ND		ug/l	1.0	1
cis-1,2-Dichloroethene	ND		ug/l	1.0	1
Dibromomethane	ND		ug/l	2.0	1
1,2,3-Trichloropropane	ND		ug/l	2.0	1
Styrene	ND		ug/l	1.0	1
Dichlorodifluoromethane	ND		ug/l	2.0	1
Acetone	ND		ug/l	5.0	1
Carbon disulfide	ND		ug/l	2.0	1
2-Butanone	ND		ug/l	5.0	1
4-Methyl-2-pentanone	ND		ug/l	5.0	1
2-Hexanone	ND		ug/l	5.0	1
Bromochloromethane	ND		ug/l	2.0	1
Tetrahydrofuran	ND		ug/l	10	1
2,2-Dichloropropane	ND		ug/l	2.0	1
1,2-Dibromoethane	ND		ug/l	2.0	1
1,3-Dichloropropane	ND		ug/l	2.0	1
1,1,1,2-Tetrachloroethane	ND		ug/l	1.0	1
Bromobenzene	ND		ug/l	2.0	1
n-Butylbenzene	ND		ug/l	2.0	1
sec-Butylbenzene	ND		ug/l	2.0	1
tert-Butylbenzene	ND		ug/l	2.0	1
o-Chlorotoluene	ND		ug/l	2.0	1
p-Chlorotoluene	ND		ug/l	2.0	1
1,2-Dibromo-3-chloropropane	ND		ug/l	5.0	1
Hexachlorobutadiene	ND		ug/l	0.60	1
Isopropylbenzene	ND		ug/l	2.0	1
p-Isopropyltoluene	ND		ug/l	2.0	1
Naphthalene	ND		ug/l	5.0	1
n-Propylbenzene	ND		ug/l	2.0	1
1,2,3-Trichlorobenzene	ND		ug/l	2.0	1
1,2,4-Trichlorobenzene	ND		ug/l	2.0	1
1,3,5-Trimethylbenzene	ND		ug/l	2.0	1
1,2,4-Trimethylbenzene	ND		ug/l	2.0	1
Ethyl ether	ND		ug/l	2.0	1

Project Name:	CITY OF NEW BEDFORD	**Lab Number:**	L1005083
Project Number:	115058	**Report Date:**	04/15/10

SAMPLE RESULTS

Lab ID:	L1005083-04	Date Collected:	04/08/10 12:10
Client ID:	MW-23	Date Received:	04/08/10
Sample Location:	NBHS	Field Prep:	Not Specified

Parameter	Result	Qualifier	Units	RDL	Dilution Factor
MCP Volatile Organics - Westborough Lab					
Isopropyl Ether	ND		ug/l	2.0	1
Ethyl-Tert-Butyl-Ether	ND		ug/l	2.0	1
Tertiary-Amyl Methyl Ether	ND		ug/l	2.0	1
1,4-Dioxane	ND		ug/l	250	1

Surrogate	% Recovery	Qualifier	Acceptance Criteria
1,2-Dichloroethane-d4	103		70-130
Toluene-d8	99		70-130
4-Bromofluorobenzene	100		70-130
Dibromofluoromethane	105		70-130

Project Name:	CITY OF NEW BEDFORD	**Lab Number:**	L1005083
Project Number:	115058	**Report Date:**	04/15/10

SAMPLE RESULTS

Lab ID:	L1005083-05	Date Collected:	04/08/10 13:45
Client ID:	MW-20	Date Received:	04/08/10
Sample Location:	NBHS	Field Prep:	Not Specified
Matrix:	Water		
Analytical Method:	60,8260B		
Analytical Date:	04/14/10 09:30		
Analyst:	MM		

Parameter	Result	Qualifier	Units	RDL	Dilution Factor
MCP Volatile Organics - Westborough Lab					
Methylene chloride	ND		ug/l	5.0	1
1,1-Dichloroethane	ND		ug/l	1.0	1
Chloroform	ND		ug/l	1.0	1
Carbon tetrachloride	ND		ug/l	1.0	1
1,2-Dichloropropane	ND		ug/l	1.0	1
Dibromochloromethane	ND		ug/l	1.0	1
1,1,2-Trichloroethane	ND		ug/l	1.0	1
Tetrachloroethene	ND		ug/l	1.0	1
Chlorobenzene	ND		ug/l	1.0	1
Trichlorofluoromethane	ND		ug/l	2.0	1
1,2-Dichloroethane	ND		ug/l	1.0	1
1,1,1-Trichloroethane	ND		ug/l	1.0	1
Bromodichloromethane	ND		ug/l	1.0	1
trans-1,3-Dichloropropene	ND		ug/l	0.50	1
cis-1,3-Dichloropropene	ND		ug/l	0.50	1
1,1-Dichloropropene	ND		ug/l	2.0	1
Bromoform	ND		ug/l	2.0	1
1,1,2,2-Tetrachloroethane	ND		ug/l	1.0	1
Benzene	ND		ug/l	1.0	1
Toluene	ND		ug/l	1.0	1
Ethylbenzene	ND		ug/l	1.0	1
Chloromethane	ND		ug/l	2.0	1
Bromomethane	ND		ug/l	5.0	1
Vinyl chloride	ND		ug/l	1.0	1
Chloroethane	ND		ug/l	2.0	1
1,1-Dichloroethene	ND		ug/l	1.0	1
trans-1,2-Dichloroethene	ND		ug/l	1.0	1
Trichloroethene	1.5		ug/l	1.0	1
1,2-Dichlorobenzene	ND		ug/l	1.0	1
1,3-Dichlorobenzene	ND		ug/l	1.0	1

Project Name:	CITY OF NEW BEDFORD	**Lab Number:**	L1005083
Project Number:	115058	**Report Date:**	04/15/10

SAMPLE RESULTS

Lab ID:	L1005083-05	Date Collected:	04/08/10 13:45
Client ID:	MW-20	Date Received:	04/08/10
Sample Location:	NBHS	Field Prep:	Not Specified

Parameter	Result	Qualifier	Units	RDL	Dilution Factor
MCP Volatile Organics - Westborough Lab					
1,4-Dichlorobenzene	ND		ug/l	1.0	1
Methyl tert butyl ether	ND		ug/l	2.0	1
p/m-Xylene	ND		ug/l	2.0	1
o-Xylene	ND		ug/l	1.0	1
cis-1,2-Dichloroethene	1.5		ug/l	1.0	1
Dibromomethane	ND		ug/l	2.0	1
1,2,3-Trichloropropane	ND		ug/l	2.0	1
Styrene	ND		ug/l	1.0	1
Dichlorodifluoromethane	ND		ug/l	2.0	1
Acetone	ND		ug/l	5.0	1
Carbon disulfide	ND		ug/l	2.0	1
2-Butanone	ND		ug/l	5.0	1
4-Methyl-2-pentanone	ND		ug/l	5.0	1
2-Hexanone	ND		ug/l	5.0	1
Bromochloromethane	ND		ug/l	2.0	1
Tetrahydrofuran	ND		ug/l	10	1
2,2-Dichloropropane	ND		ug/l	2.0	1
1,2-Dibromoethane	ND		ug/l	2.0	1
1,3-Dichloropropane	ND		ug/l	2.0	1
1,1,1,2-Tetrachloroethane	ND		ug/l	1.0	1
Bromobenzene	ND		ug/l	2.0	1
n-Butylbenzene	ND		ug/l	2.0	1
sec-Butylbenzene	ND		ug/l	2.0	1
tert-Butylbenzene	ND		ug/l	2.0	1
o-Chlorotoluene	ND		ug/l	2.0	1
p-Chlorotoluene	ND		ug/l	2.0	1
1,2-Dibromo-3-chloropropane	ND		ug/l	5.0	1
Hexachlorobutadiene	ND		ug/l	0.60	1
Isopropylbenzene	ND		ug/l	2.0	1
p-Isopropyltoluene	ND		ug/l	2.0	1
Naphthalene	ND		ug/l	5.0	1
n-Propylbenzene	ND		ug/l	2.0	1
1,2,3-Trichlorobenzene	ND		ug/l	2.0	1
1,2,4-Trichlorobenzene	ND		ug/l	2.0	1
1,3,5-Trimethylbenzene	ND		ug/l	2.0	1
1,2,4-Trimethylbenzene	ND		ug/l	2.0	1
Ethyl ether	ND		ug/l	2.0	1

Project Name:	CITY OF NEW BEDFORD	**Lab Number:**	L1005083
Project Number:	115058	**Report Date:**	04/15/10

SAMPLE RESULTS

Lab ID:	L1005083-05	Date Collected:	04/08/10 13:45
Client ID:	MW-20	Date Received:	04/08/10
Sample Location:	NBHS	Field Prep:	Not Specified

Parameter	Result	Qualifier	Units	RDL	Dilution Factor
MCP Volatile Organics - Westborough Lab					
Isopropyl Ether	ND		ug/l	2.0	1
Ethyl-Tert-Butyl-Ether	ND		ug/l	2.0	1
Tertiary-Amyl Methyl Ether	ND		ug/l	2.0	1
1,4-Dioxane	ND		ug/l	250	1

Surrogate	% Recovery	Qualifier	Acceptance Criteria
1,2-Dichloroethane-d4	105		70-130
Toluene-d8	96		70-130
4-Bromofluorobenzene	104		70-130
Dibromofluoromethane	97		70-130

Project Name:	CITY OF NEW BEDFORD	**Lab Number:**	L1005083
Project Number:	115058	**Report Date:**	04/15/10

SAMPLE RESULTS

Lab ID:	L1005083-06	Date Collected:	04/08/10 13:55
Client ID:	MW-5	Date Received:	04/08/10
Sample Location:	NBHS	Field Prep:	Not Specified
Matrix:	Water		
Analytical Method:	60,8260B		
Analytical Date:	04/14/10 10:02		
Analyst:	MM		

Parameter	Result	Qualifier	Units	RDL	Dilution Factor
MCP Volatile Organics - Westborough Lab					
Methylene chloride	ND		ug/l	5.0	1
1,1-Dichloroethane	ND		ug/l	1.0	1
Chloroform	ND		ug/l	1.0	1
Carbon tetrachloride	ND		ug/l	1.0	1
1,2-Dichloropropane	ND		ug/l	1.0	1
Dibromochloromethane	ND		ug/l	1.0	1
1,1,2-Trichloroethane	ND		ug/l	1.0	1
Tetrachloroethene	ND		ug/l	1.0	1
Chlorobenzene	ND		ug/l	1.0	1
Trichlorofluoromethane	ND		ug/l	2.0	1
1,2-Dichloroethane	ND		ug/l	1.0	1
1,1,1-Trichloroethane	ND		ug/l	1.0	1
Bromodichloromethane	ND		ug/l	1.0	1
trans-1,3-Dichloropropene	ND		ug/l	0.50	1
cis-1,3-Dichloropropene	ND		ug/l	0.50	1
1,1-Dichloropropene	ND		ug/l	2.0	1
Bromoform	ND		ug/l	2.0	1
1,1,2,2-Tetrachloroethane	ND		ug/l	1.0	1
Benzene	ND		ug/l	1.0	1
Toluene	ND		ug/l	1.0	1
Ethylbenzene	ND		ug/l	1.0	1
Chloromethane	ND		ug/l	2.0	1
Bromomethane	ND		ug/l	5.0	1
Vinyl chloride	ND		ug/l	1.0	1
Chloroethane	ND		ug/l	2.0	1
1,1-Dichloroethene	ND		ug/l	1.0	1
trans-1,2-Dichloroethene	ND		ug/l	1.0	1
Trichloroethene	ND		ug/l	1.0	1
1,2-Dichlorobenzene	ND		ug/l	1.0	1
1,3-Dichlorobenzene	ND		ug/l	1.0	1

Project Name:	CITY OF NEW BEDFORD	**Lab Number:**	L1005083
Project Number:	115058	**Report Date:**	04/15/10

SAMPLE RESULTS

Lab ID:	L1005083-06	Date Collected:	04/08/10 13:55
Client ID:	MW-5	Date Received:	04/08/10
Sample Location:	NBHS	Field Prep:	Not Specified

Parameter	Result	Qualifier	Units	RDL	Dilution Factor
MCP Volatile Organics - Westborough Lab					
1,4-Dichlorobenzene	ND		ug/l	1.0	1
Methyl tert butyl ether	ND		ug/l	2.0	1
p/m-Xylene	ND		ug/l	2.0	1
o-Xylene	ND		ug/l	1.0	1
cis-1,2-Dichloroethene	3.2		ug/l	1.0	1
Dibromomethane	ND		ug/l	2.0	1
1,2,3-Trichloropropane	ND		ug/l	2.0	1
Styrene	ND		ug/l	1.0	1
Dichlorodifluoromethane	ND		ug/l	2.0	1
Acetone	ND		ug/l	5.0	1
Carbon disulfide	ND		ug/l	2.0	1
2-Butanone	ND		ug/l	5.0	1
4-Methyl-2-pentanone	ND		ug/l	5.0	1
2-Hexanone	ND		ug/l	5.0	1
Bromochloromethane	ND		ug/l	2.0	1
Tetrahydrofuran	ND		ug/l	10	1
2,2-Dichloropropane	ND		ug/l	2.0	1
1,2-Dibromoethane	ND		ug/l	2.0	1
1,3-Dichloropropane	ND		ug/l	2.0	1
1,1,1,2-Tetrachloroethane	ND		ug/l	1.0	1
Bromobenzene	ND		ug/l	2.0	1
n-Butylbenzene	ND		ug/l	2.0	1
sec-Butylbenzene	ND		ug/l	2.0	1
tert-Butylbenzene	ND		ug/l	2.0	1
o-Chlorotoluene	ND		ug/l	2.0	1
p-Chlorotoluene	ND		ug/l	2.0	1
1,2-Dibromo-3-chloropropane	ND		ug/l	5.0	1
Hexachlorobutadiene	ND		ug/l	0.60	1
Isopropylbenzene	ND		ug/l	2.0	1
p-Isopropyltoluene	ND		ug/l	2.0	1
Naphthalene	ND		ug/l	5.0	1
n-Propylbenzene	ND		ug/l	2.0	1
1,2,3-Trichlorobenzene	ND		ug/l	2.0	1
1,2,4-Trichlorobenzene	ND		ug/l	2.0	1
1,3,5-Trimethylbenzene	ND		ug/l	2.0	1
1,2,4-Trimethylbenzene	ND		ug/l	2.0	1
Ethyl ether	ND		ug/l	2.0	1

Project Name:	CITY OF NEW BEDFORD	**Lab Number:**	L1005083
Project Number:	115058	**Report Date:**	04/15/10

SAMPLE RESULTS

Lab ID:	L1005083-06	Date Collected:	04/08/10 13:55
Client ID:	MW-5	Date Received:	04/08/10
Sample Location:	NBHS	Field Prep:	Not Specified

Parameter	Result	Qualifier	Units	RDL	Dilution Factor
MCP Volatile Organics - Westborough Lab					
Isopropyl Ether	ND		ug/l	2.0	1
Ethyl-Tert-Butyl-Ether	ND		ug/l	2.0	1
Tertiary-Amyl Methyl Ether	ND		ug/l	2.0	1
1,4-Dioxane	ND		ug/l	250	1

Surrogate	% Recovery	Qualifier	Acceptance Criteria
1,2-Dichloroethane-d4	106		70-130
Toluene-d8	98		70-130
4-Bromofluorobenzene	106		70-130
Dibromofluoromethane	98		70-130

Project Name:	CITY OF NEW BEDFORD	**Lab Number:**	L1005083
Project Number:	115058	**Report Date:**	04/15/10

SAMPLE RESULTS

Lab ID:	L1005083-07	Date Collected:	04/08/10 00:00
Client ID:	TRIP BLANK	Date Received:	04/08/10
Sample Location:	NBHS	Field Prep:	Not Specified
Matrix:	Water		
Analytical Method:	60,8260B		
Analytical Date:	04/13/10 12:44		
Analyst:	MM		

Parameter	Result	Qualifier	Units	RDL	Dilution Factor
MCP Volatile Organics - Westborough Lab					
Methylene chloride	ND		ug/l	5.0	1
1,1-Dichloroethane	ND		ug/l	1.0	1
Chloroform	ND		ug/l	1.0	1
Carbon tetrachloride	ND		ug/l	1.0	1
1,2-Dichloropropane	ND		ug/l	1.0	1
Dibromochloromethane	ND		ug/l	1.0	1
1,1,2-Trichloroethane	ND		ug/l	1.0	1
Tetrachloroethene	ND		ug/l	1.0	1
Chlorobenzene	ND		ug/l	1.0	1
Trichlorofluoromethane	ND		ug/l	2.0	1
1,2-Dichloroethane	ND		ug/l	1.0	1
1,1,1-Trichloroethane	ND		ug/l	1.0	1
Bromodichloromethane	ND		ug/l	1.0	1
trans-1,3-Dichloropropene	ND		ug/l	0.50	1
cis-1,3-Dichloropropene	ND		ug/l	0.50	1
1,1-Dichloropropene	ND		ug/l	2.0	1
Bromoform	ND		ug/l	2.0	1
1,1,2,2-Tetrachloroethane	ND		ug/l	1.0	1
Benzene	ND		ug/l	1.0	1
Toluene	ND		ug/l	1.0	1
Ethylbenzene	ND		ug/l	1.0	1
Chloromethane	ND		ug/l	2.0	1
Bromomethane	ND		ug/l	5.0	1
Vinyl chloride	ND		ug/l	1.0	1
Chloroethane	ND		ug/l	2.0	1
1,1-Dichloroethene	ND		ug/l	1.0	1
trans-1,2-Dichloroethene	ND		ug/l	1.0	1
Trichloroethene	ND		ug/l	1.0	1
1,2-Dichlorobenzene	ND		ug/l	1.0	1
1,3-Dichlorobenzene	ND		ug/l	1.0	1

Project Name:	CITY OF NEW BEDFORD	**Lab Number:**	L1005083
Project Number:	115058	**Report Date:**	04/15/10

SAMPLE RESULTS

Lab ID:	L1005083-07	Date Collected:	04/08/10 00:00
Client ID:	TRIP BLANK	Date Received:	04/08/10
Sample Location:	NBHS	Field Prep:	Not Specified

Parameter	Result	Qualifier	Units	RDL	Dilution Factor
MCP Volatile Organics - Westborough Lab					
1,4-Dichlorobenzene	ND		ug/l	1.0	1
Methyl tert butyl ether	ND		ug/l	2.0	1
p/m-Xylene	ND		ug/l	2.0	1
o-Xylene	ND		ug/l	1.0	1
cis-1,2-Dichloroethene	ND		ug/l	1.0	1
Dibromomethane	ND		ug/l	2.0	1
1,2,3-Trichloropropane	ND		ug/l	2.0	1
Styrene	ND		ug/l	1.0	1
Dichlorodifluoromethane	ND		ug/l	2.0	1
Acetone	ND		ug/l	5.0	1
Carbon disulfide	ND		ug/l	2.0	1
2-Butanone	ND		ug/l	5.0	1
4-Methyl-2-pentanone	ND		ug/l	5.0	1
2-Hexanone	ND		ug/l	5.0	1
Bromochloromethane	ND		ug/l	2.0	1
Tetrahydrofuran	ND		ug/l	10	1
2,2-Dichloropropane	ND		ug/l	2.0	1
1,2-Dibromoethane	ND		ug/l	2.0	1
1,3-Dichloropropane	ND		ug/l	2.0	1
1,1,1,2-Tetrachloroethane	ND		ug/l	1.0	1
Bromobenzene	ND		ug/l	2.0	1
n-Butylbenzene	ND		ug/l	2.0	1
sec-Butylbenzene	ND		ug/l	2.0	1
tert-Butylbenzene	ND		ug/l	2.0	1
o-Chlorotoluene	ND		ug/l	2.0	1
p-Chlorotoluene	ND		ug/l	2.0	1
1,2-Dibromo-3-chloropropane	ND		ug/l	5.0	1
Hexachlorobutadiene	ND		ug/l	0.60	1
Isopropylbenzene	ND		ug/l	2.0	1
p-Isopropyltoluene	ND		ug/l	2.0	1
Naphthalene	ND		ug/l	5.0	1
n-Propylbenzene	ND		ug/l	2.0	1
1,2,3-Trichlorobenzene	ND		ug/l	2.0	1
1,2,4-Trichlorobenzene	ND		ug/l	2.0	1
1,3,5-Trimethylbenzene	ND		ug/l	2.0	1
1,2,4-Trimethylbenzene	ND		ug/l	2.0	1
Ethyl ether	ND		ug/l	2.0	1

Project Name:	CITY OF NEW BEDFORD	**Lab Number:**	L1005083
Project Number:	115058	**Report Date:**	04/15/10

SAMPLE RESULTS

Lab ID:	L1005083-07	Date Collected:	04/08/10 00:00
Client ID:	TRIP BLANK	Date Received:	04/08/10
Sample Location:	NBHS	Field Prep:	Not Specified

Parameter	Result	Qualifier	Units	RDL	Dilution Factor
MCP Volatile Organics - Westborough Lab					
Isopropyl Ether	ND		ug/l	2.0	1
Ethyl-Tert-Butyl-Ether	ND		ug/l	2.0	1
Tertiary-Amyl Methyl Ether	ND		ug/l	2.0	1
1,4-Dioxane	ND		ug/l	250	1

Surrogate	% Recovery	Qualifier	Acceptance Criteria
1,2-Dichloroethane-d4	106		70-130
Toluene-d8	99		70-130
4-Bromofluorobenzene	99		70-130
Dibromofluoromethane	104		70-130

Project Name: CITY OF NEW BEDFORD **Lab Number:** L1005083

Project Number: 115058 **Report Date:** 04/15/10

Method Blank Analysis
Batch Quality Control

Analytical Method: 60,8260B
Analytical Date: 04/13/10 10:29
Analyst: MM

Parameter	Result	Qualifier	Units	RDL
MCP Volatile Organics - Westborough Lab for sample(s): 01-04,07 Batch: WG408035-3				
Methylene chloride	ND		ug/l	5.0
1,1-Dichloroethane	ND		ug/l	1.0
Chloroform	ND		ug/l	1.0
Carbon tetrachloride	ND		ug/l	1.0
1,2-Dichloropropane	ND		ug/l	1.0
Dibromochloromethane	ND		ug/l	1.0
1,1,2-Trichloroethane	ND		ug/l	1.0
Tetrachloroethene	ND		ug/l	1.0
Chlorobenzene	ND		ug/l	1.0
Trichlorofluoromethane	ND		ug/l	2.0
1,2-Dichloroethane	ND		ug/l	1.0
1,1,1-Trichloroethane	ND		ug/l	1.0
Bromodichloromethane	ND		ug/l	1.0
trans-1,3-Dichloropropene	ND		ug/l	0.50
cis-1,3-Dichloropropene	ND		ug/l	0.50
1,1-Dichloropropene	ND		ug/l	2.0
Bromoform	ND		ug/l	2.0
1,1,2,2-Tetrachloroethane	ND		ug/l	1.0
Benzene	ND		ug/l	1.0
Toluene	ND		ug/l	1.0
Ethylbenzene	ND		ug/l	1.0
Chloromethane	ND		ug/l	2.0
Bromomethane	ND		ug/l	5.0
Vinyl chloride	ND		ug/l	1.0
Chloroethane	ND		ug/l	2.0
1,1-Dichloroethene	ND		ug/l	1.0
trans-1,2-Dichloroethene	ND		ug/l	1.0
Trichloroethene	ND		ug/l	1.0
1,2-Dichlorobenzene	ND		ug/l	1.0
1,3-Dichlorobenzene	ND		ug/l	1.0
1,4-Dichlorobenzene	ND		ug/l	1.0

Project Name: CITY OF NEW BEDFORD **Lab Number:** L1005083

Project Number: 115058 **Report Date:** 04/15/10

Method Blank Analysis
Batch Quality Control

Analytical Method: 60,8260B
Analytical Date: 04/13/10 10:29
Analyst: MM

Parameter	Result	Qualifier	Units	RDL
MCP Volatile Organics - Westborough Lab for sample(s): 01-04,07 Batch: WG408035-3				
Methyl tert butyl ether	ND		ug/l	2.0
p/m-Xylene	ND		ug/l	2.0
o-Xylene	ND		ug/l	1.0
cis-1,2-Dichloroethene	ND		ug/l	1.0
Dibromomethane	ND		ug/l	2.0
1,2,3-Trichloropropane	ND		ug/l	2.0
Styrene	ND		ug/l	1.0
Dichlorodifluoromethane	ND		ug/l	2.0
Acetone	ND		ug/l	5.0
Carbon disulfide	ND		ug/l	2.0
2-Butanone	ND		ug/l	5.0
4-Methyl-2-pentanone	ND		ug/l	5.0
2-Hexanone	ND		ug/l	5.0
Bromochloromethane	ND		ug/l	2.0
Tetrahydrofuran	ND		ug/l	10
2,2-Dichloropropane	ND		ug/l	2.0
1,2-Dibromoethane	ND		ug/l	2.0
1,3-Dichloropropane	ND		ug/l	2.0
1,1,1,2-Tetrachloroethane	ND		ug/l	1.0
Bromobenzene	ND		ug/l	2.0
n-Butylbenzene	ND		ug/l	2.0
sec-Butylbenzene	ND		ug/l	2.0
tert-Butylbenzene	ND		ug/l	2.0
o-Chlorotoluene	ND		ug/l	2.0
p-Chlorotoluene	ND		ug/l	2.0
1,2-Dibromo-3-chloropropane	ND		ug/l	5.0
Hexachlorobutadiene	ND		ug/l	0.60
Isopropylbenzene	ND		ug/l	2.0
p-Isopropyltoluene	ND		ug/l	2.0
Naphthalene	ND		ug/l	5.0
n-Propylbenzene	ND		ug/l	2.0

Project Name:	CITY OF NEW BEDFORD	**Lab Number:**	L1005083
Project Number:	115058	**Report Date:**	04/15/10

Method Blank Analysis
Batch Quality Control

Analytical Method: 60,8260B
Analytical Date: 04/13/10 10:29
Analyst: MM

Parameter	Result	Qualifier	Units	RDL
MCP Volatile Organics - Westborough Lab for sample(s): 01-04,07 Batch: WG408035-3				
1,2,3-Trichlorobenzene	ND		ug/l	2.0
1,2,4-Trichlorobenzene	ND		ug/l	2.0
1,3,5-Trimethylbenzene	ND		ug/l	2.0
1,2,4-Trimethylbenzene	ND		ug/l	2.0
Ethyl ether	ND		ug/l	2.0
Isopropyl Ether	ND		ug/l	2.0
Ethyl-Tert-Butyl-Ether	ND		ug/l	2.0
Tertiary-Amyl Methyl Ether	ND		ug/l	2.0
1,4-Dioxane	ND		ug/l	250
1,1,2-Trichloro-1,2,2-Trifluoroethane	ND		ug/l	10

Surrogate	%Recovery	Qualifier	Acceptance Criteria
1,2-Dichloroethane-d4	99		70-130
Toluene-d8	99		70-130
4-Bromofluorobenzene	103		70-130
Dibromofluoromethane	98		70-130

Project Name: CITY OF NEW BEDFORD **Lab Number:** L1005083

Project Number: 115058 **Report Date:** 04/15/10

Method Blank Analysis
Batch Quality Control

Analytical Method: 60,8260B
Analytical Date: 04/14/10 08:58
Analyst: MM

Parameter	Result	Qualifier	Units	RDL
MCP Volatile Organics - Westborough Lab for sample(s): 05-06 Batch: WG408115-3				
Methylene chloride	ND		ug/l	5.0
1,1-Dichloroethane	ND		ug/l	1.0
Chloroform	ND		ug/l	1.0
Carbon tetrachloride	ND		ug/l	1.0
1,2-Dichloropropane	ND		ug/l	1.0
Dibromochloromethane	ND		ug/l	1.0
1,1,2-Trichloroethane	ND		ug/l	1.0
Tetrachloroethene	ND		ug/l	1.0
Chlorobenzene	ND		ug/l	1.0
Trichlorofluoromethane	ND		ug/l	2.0
1,2-Dichloroethane	ND		ug/l	1.0
1,1,1-Trichloroethane	ND		ug/l	1.0
Bromodichloromethane	ND		ug/l	1.0
trans-1,3-Dichloropropene	ND		ug/l	0.50
cis-1,3-Dichloropropene	ND		ug/l	0.50
1,1-Dichloropropene	ND		ug/l	2.0
Bromoform	ND		ug/l	2.0
1,1,2,2-Tetrachloroethane	ND		ug/l	1.0
Benzene	ND		ug/l	1.0
Toluene	ND		ug/l	1.0
Ethylbenzene	ND		ug/l	1.0
Chloromethane	ND		ug/l	2.0
Bromomethane	ND		ug/l	5.0
Vinyl chloride	ND		ug/l	1.0
Chloroethane	ND		ug/l	2.0
1,1-Dichloroethene	ND		ug/l	1.0
trans-1,2-Dichloroethene	ND		ug/l	1.0
Trichloroethene	ND		ug/l	1.0
1,2-Dichlorobenzene	ND		ug/l	1.0
1,3-Dichlorobenzene	ND		ug/l	1.0
1,4-Dichlorobenzene	ND		ug/l	1.0

Project Name: CITY OF NEW BEDFORD **Lab Number:** L1005083

Project Number: 115058 **Report Date:** 04/15/10

Method Blank Analysis
Batch Quality Control

Analytical Method: 60,8260B
Analytical Date: 04/14/10 08:58
Analyst: MM

Parameter	Result	Qualifier	Units	RDL
MCP Volatile Organics - Westborough Lab for sample(s): 05-06 Batch: WG408115-3				
Methyl tert butyl ether	ND		ug/l	2.0
p/m-Xylene	ND		ug/l	2.0
o-Xylene	ND		ug/l	1.0
cis-1,2-Dichloroethene	ND		ug/l	1.0
Dibromomethane	ND		ug/l	2.0
1,2,3-Trichloropropane	ND		ug/l	2.0
Styrene	ND		ug/l	1.0
Dichlorodifluoromethane	ND		ug/l	2.0
Acetone	ND		ug/l	5.0
Carbon disulfide	ND		ug/l	2.0
2-Butanone	ND		ug/l	5.0
4-Methyl-2-pentanone	ND		ug/l	5.0
2-Hexanone	ND		ug/l	5.0
Bromochloromethane	ND		ug/l	2.0
Tetrahydrofuran	ND		ug/l	10
2,2-Dichloropropane	ND		ug/l	2.0
1,2-Dibromoethane	ND		ug/l	2.0
1,3-Dichloropropane	ND		ug/l	2.0
1,1,1,2-Tetrachloroethane	ND		ug/l	1.0
Bromobenzene	ND		ug/l	2.0
n-Butylbenzene	ND		ug/l	2.0
sec-Butylbenzene	ND		ug/l	2.0
tert-Butylbenzene	ND		ug/l	2.0
o-Chlorotoluene	ND		ug/l	2.0
p-Chlorotoluene	ND		ug/l	2.0
1,2-Dibromo-3-chloropropane	ND		ug/l	5.0
Hexachlorobutadiene	ND		ug/l	0.60
Isopropylbenzene	ND		ug/l	2.0
p-Isopropyltoluene	ND		ug/l	2.0
Naphthalene	ND		ug/l	5.0
n-Propylbenzene	ND		ug/l	2.0

Project Name: CITY OF NEW BEDFORD **Lab Number:** L1005083

Project Number: 115058 **Report Date:** 04/15/10

Method Blank Analysis
Batch Quality Control

Analytical Method: 60,8260B
Analytical Date: 04/14/10 08:58
Analyst: MM

Parameter	Result	Qualifier	Units	RDL
MCP Volatile Organics - Westborough Lab for sample(s): 05-06 Batch: WG408115-3				
1,2,3-Trichlorobenzene	ND		ug/l	2.0
1,2,4-Trichlorobenzene	ND		ug/l	2.0
1,3,5-Trimethylbenzene	ND		ug/l	2.0
1,2,4-Trimethylbenzene	ND		ug/l	2.0
Ethyl ether	ND		ug/l	2.0
Isopropyl Ether	ND		ug/l	2.0
Ethyl-Tert-Butyl-Ether	ND		ug/l	2.0
Tertiary-Amyl Methyl Ether	ND		ug/l	2.0
1,4-Dioxane	ND		ug/l	250

Surrogate	%Recovery	Qualifier	Acceptance Criteria
1,2-Dichloroethane-d4	98		70-130
Toluene-d8	98		70-130
4-Bromofluorobenzene	107		70-130
Dibromofluoromethane	90		70-130

Lab Control Sample Analysis
Batch Quality Control

Project Name: CITY OF NEW BEDFORD
Project Number: 115058

Lab Number: L1005083
Report Date: 04/15/10

Parameter	LCS %Recovery	Qual	LCSD %Recovery	Qual	%Recovery Limits	RPD	Qual	RPD Limits
MCP Volatile Organics - Westborough Lab Associated sample(s): 01-04,07 Batch: WG408035-1 WG408035-2								
Methylene chloride	111		112		70-130	1		25
1,1-Dichloroethane	109		113		70-130	4		25
Chloroform	113		117		70-130	3		25
Carbon tetrachloride	121		126		70-130	4		25
1,2-Dichloropropane	106		110		70-130	4		25
Dibromochloromethane	130		128		70-130	2		25
1,1,2-Trichloroethane	115		111		70-130	4		25
Tetrachloroethene	124		125		70-130	1		25
Chlorobenzene	113		114		70-130	1		25
Trichlorofluoromethane	124		127		70-130	2		25
1,2-Dichloroethane	118		118		70-130	0		25
1,1,1-Trichloroethane	111		117		70-130	5		25
Bromodichloromethane	121		122		70-130	1		25
trans-1,3-Dichloropropene	110		108		70-130	2		25
cis-1,3-Dichloropropene	97		102		70-130	5		25
1,1-Dichloropropene	114		116		70-130	2		25
Bromoform	**139**	Q	**146**	Q	70-130	5		50
1,1,2,2-Tetrachloroethane	108		108		70-130	0		25
Benzene	110		114		70-130	4		25
Toluene	110		112		70-130	2		25
Ethylbenzene	116		118		70-130	2		25

Lab Control Sample Analysis
Batch Quality Control

Project Name: CITY OF NEW BEDFORD
Project Number: 115058

Lab Number: L1005083
Report Date: 04/15/10

Parameter	LCS %Recovery	Qual	LCSD %Recovery	Qual	%Recovery Limits	RPD	Qual	RPD Limits
MCP Volatile Organics - Westborough Lab Associated sample(s): 01-04,07 Batch: WG408035-1 WG408035-2								
Chloromethane	83		88		70-130	6		50
Bromomethane	105		108		70-130	3		50
Vinyl chloride	93		94		70-130	1		25
Chloroethane	**141**	Q	129		70-130	9		25
1,1-Dichloroethene	119		122		70-130	2		25
trans-1,2-Dichloroethene	113		120		70-130	6		25
Trichloroethene	109		110		70-130	1		25
1,2-Dichlorobenzene	115		117		70-130	2		25
1,3-Dichlorobenzene	118		119		70-130	1		25
1,4-Dichlorobenzene	115		119		70-130	3		25
Methyl tert butyl ether	100		103		70-130	3		25
p/m-Xylene	117		118		70-130	1		25
o-Xylene	115		116		70-130	1		25
cis-1,2-Dichloroethene	115		118		70-130	3		25
Dibromomethane	101		103		70-130	2		25
1,2,3-Trichloropropane	120		116		70-130	3		25
Styrene	107		108		70-130	1		25
Dichlorodifluoromethane	**58**	Q	**59**	Q	70-130	2		50
Acetone	129		**134**	Q	70-130	4		50
Carbon disulfide	102		106		70-130	4		50
2-Butanone	112		114		70-130	2		50

Lab Control Sample Analysis
Batch Quality Control

Project Name: CITY OF NEW BEDFORD
Project Number: 115058

Lab Number: L1005083
Report Date: 04/15/10

Parameter	LCS %Recovery	Qual	LCSD %Recovery	Qual	%Recovery Limits	RPD	Qual	RPD Limits
MCP Volatile Organics - Westborough Lab Associated sample(s): 01-04,07 Batch: WG408035-1 WG408035-2								
4-Methyl-2-pentanone	107		103		70-130	4		50
2-Hexanone	104		104		70-130	0		50
Bromochloromethane	116		118		70-130	2		25
Tetrahydrofuran	106		113		70-130	6		25
2,2-Dichloropropane	110		109		70-130	1		50
1,2-Dibromoethane	114		112		70-130	2		25
1,3-Dichloropropane	114		111		70-130	3		25
1,1,1,2-Tetrachloroethane	124		123		70-130	1		25
Bromobenzene	114		120		70-130	5		25
n-Butylbenzene	108		113		70-130	5		25
sec-Butylbenzene	109		114		70-130	4		25
tert-Butylbenzene	112		117		70-130	4		25
o-Chlorotoluene	109		111		70-130	2		25
p-Chlorotoluene	113		117		70-130	3		25
1,2-Dibromo-3-chloropropane	112		103		70-130	8		50
Hexachlorobutadiene	109		120		70-130	10		25
Isopropylbenzene	118		118		70-130	0		25
p-Isopropyltoluene	112		119		70-130	6		25
Naphthalene	92		99		70-130	7		25
n-Propylbenzene	111		113		70-130	2		25
1,2,3-Trichlorobenzene	104		112		70-130	7		25

ALPHA ANALYTICAL

Lab Control Sample Analysis
Batch Quality Control

Project Name: CITY OF NEW BEDFORD
Project Number: 115058

Lab Number: L1005083
Report Date: 04/15/10

Parameter	LCS %Recovery	Qual	LCSD %Recovery	Qual	%Recovery Limits	RPD	Qual	RPD Limits
MCP Volatile Organics - Westborough Lab Associated sample(s): 01-04,07 Batch: WG408035-1 WG408035-2								
1,2,4-Trichlorobenzene	108		116		70-130	7		25
1,3,5-Trimethylbenzene	110		113		70-130	3		25
1,2,4-Trimethylbenzene	109		114		70-130	4		25
Ethyl ether	115		115		70-130	0		25
Isopropyl Ether	106		110		70-130	4		25
Ethyl-Tert-Butyl-Ether	105		107		70-130	2		25
Tertiary-Amyl Methyl Ether	104		108		70-130	4		25
1,4-Dioxane	**67**	Q	103		70-130	42		50
1,1,2-Trichloro-1,2,2-Trifluoroethane	110		113		70-130	3		50

Surrogate	LCS %Recovery	Qual	LCSD %Recovery	Qual	Acceptance Criteria
1,2-Dichloroethane-d4	97		97		70-130
Toluene-d8	100		98		70-130
4-Bromofluorobenzene	92		92		70-130
Dibromofluoromethane	101		104		70-130

Lab Control Sample Analysis
Batch Quality Control

Project Name: CITY OF NEW BEDFORD
Project Number: 115058

Lab Number: L1005083
Report Date: 04/15/10

Parameter	LCS %Recovery	Qual	LCSD %Recovery	Qual	%Recovery Limits	RPD	Qual	RPD Limits
MCP Volatile Organics - Westborough Lab Associated sample(s): 05-06 Batch: WG408115-1 WG408115-2								
Methylene chloride	105		104		70-130	1		25
1,1-Dichloroethane	90		92		70-130	2		25
Chloroform	92		92		70-130	0		25
Carbon tetrachloride	88		96		70-130	9		25
1,2-Dichloropropane	92		92		70-130	0		25
Dibromochloromethane	90		87		70-130	3		25
1,1,2-Trichloroethane	100		91		70-130	9		25
Tetrachloroethene	93		96		70-130	3		25
Chlorobenzene	94		96		70-130	2		25
Trichlorofluoromethane	88		92		70-130	4		25
1,2-Dichloroethane	100		95		70-130	5		25
1,1,1-Trichloroethane	90		94		70-130	4		25
Bromodichloromethane	102		108		70-130	6		25
trans-1,3-Dichloropropene	92		89		70-130	3		25
cis-1,3-Dichloropropene	82		84		70-130	2		25
1,1-Dichloropropene	92		95		70-130	3		25
Bromoform	88		91		70-130	3		50
1,1,2,2-Tetrachloroethane	90		92		70-130	2		25
Benzene	93		94		70-130	1		25
Toluene	94		94		70-130	0		25
Ethylbenzene	100		101		70-130	1		25

Lab Control Sample Analysis
Batch Quality Control

Project Name: CITY OF NEW BEDFORD
Project Number: 115058

Lab Number: L1005083
Report Date: 04/15/10

Parameter	LCS %Recovery	Qual	LCSD %Recovery	Qual	%Recovery Limits	RPD	Qual	RPD Limits
MCP Volatile Organics - Westborough Lab Associated sample(s): 05-06 Batch: WG408115-1 WG408115-2								
Chloromethane	92		88		70-130	4		50
Bromomethane	91		93		70-130	2		50
Vinyl chloride	97		100		70-130	3		25
Chloroethane	100		102		70-130	2		25
1,1-Dichloroethene	84		92		70-130	9		25
trans-1,2-Dichloroethene	85		89		70-130	5		25
Trichloroethene	86		86		70-130	0		25
1,2-Dichlorobenzene	97		98		70-130	1		25
1,3-Dichlorobenzene	98		98		70-130	0		25
1,4-Dichlorobenzene	96		100		70-130	4		25
Methyl tert butyl ether	93		88		70-130	6		25
p/m-Xylene	105		103		70-130	2		25
o-Xylene	105		105		70-130	0		25
cis-1,2-Dichloroethene	91		92		70-130	1		25
Dibromomethane	95		93		70-130	2		25
1,2,3-Trichloropropane	98		95		70-130	3		25
Styrene	99		96		70-130	3		25
Dichlorodifluoromethane	**58**	Q	**56**	Q	70-130	4		50
Acetone	115		105		70-130	9		50
Carbon disulfide	70		76		70-130	8		50
2-Butanone	95		100		70-130	5		50

Lab Control Sample Analysis
Batch Quality Control

Project Name: CITY OF NEW BEDFORD
Project Number: 115058

Lab Number: L1005083
Report Date: 04/15/10

Parameter	LCS %Recovery	Qual	LCSD %Recovery	Qual	%Recovery Limits	RPD	Qual	RPD Limits
MCP Volatile Organics - Westborough Lab Associated sample(s): 05-06 Batch: WG408115-1 WG408115-2								
4-Methyl-2-pentanone	98		95		70-130	3		50
2-Hexanone	105		97		70-130	8		50
Bromochloromethane	96		96		70-130	0		25
Tetrahydrofuran	93		80		70-130	15		25
2,2-Dichloropropane	97		102		70-130	5		50
1,2-Dibromoethane	91		91		70-130	0		25
1,3-Dichloropropane	89		87		70-130	2		25
1,1,1,2-Tetrachloroethane	99		102		70-130	3		25
Bromobenzene	95		97		70-130	2		25
n-Butylbenzene	91		94		70-130	3		25
sec-Butylbenzene	97		101		70-130	4		25
tert-Butylbenzene	93		97		70-130	4		25
o-Chlorotoluene	93		96		70-130	3		25
p-Chlorotoluene	96		99		70-130	3		25
1,2-Dibromo-3-chloropropane	111		114		70-130	3		50
Hexachlorobutadiene	91		94		70-130	3		25
Isopropylbenzene	104		103		70-130	1		25
p-Isopropyltoluene	92		96		70-130	4		25
Naphthalene	74		74		70-130	0		25
n-Propylbenzene	97		100		70-130	3		25
1,2,3-Trichlorobenzene	87		88		70-130	1		25

Lab Control Sample Analysis
Batch Quality Control

Project Name: CITY OF NEW BEDFORD
Project Number: 115058

Lab Number: L1005083
Report Date: 04/15/10

Parameter	LCS %Recovery	Qual	LCSD %Recovery	Qual	%Recovery Limits	RPD	Qual	RPD Limits
MCP Volatile Organics - Westborough Lab Associated sample(s): 05-06 Batch: WG408115-1 WG408115-2								
1,2,4-Trichlorobenzene	90		93		70-130	3		25
1,3,5-Trimethylbenzene	93		95		70-130	2		25
1,2,4-Trimethylbenzene	92		93		70-130	1		25
Ethyl ether	89		88		70-130	1		25
Isopropyl Ether	98		95		70-130	3		25
Ethyl-Tert-Butyl-Ether	97		96		70-130	1		25
Tertiary-Amyl Methyl Ether	99		93		70-130	6		25
1,4-Dioxane	102		95		70-130	7		50

Surrogate	LCS %Recovery	Qual	LCSD %Recovery	Qual	Acceptance Criteria
1,2-Dichloroethane-d4	102		97		70-130
Toluene-d8	102		102		70-130
4-Bromofluorobenzene	94		96		70-130
Dibromofluoromethane	97		97		70-130

Project Name: CITY OF NEW BEDFORD
Project Number: 115058

Lab Number: L1005083
Report Date: 04/15/10

Sample Receipt and Container Information

Were project specific reporting limits specified? YES

Cooler Information

Cooler	Custody Seal
A	Absent

VOA/VPH H2O Preservative Date: NA

Container Information

Container ID	Container Type	Cooler	pH	Temp deg C	Pres	Seal	Analysis
L1005083-01A	Vial HCl preserved	A	N/A	2	Y	Absent	MCP-8260-04(14)
L1005083-01B	Vial HCl preserved	A	N/A	2	Y	Absent	MCP-8260-04(14)
L1005083-02A	Vial HCl preserved	A	N/A	2	Y	Absent	MCP-8260-04(14)
L1005083-02B	Vial HCl preserved	A	N/A	2	Y	Absent	MCP-8260-04(14)
L1005083-03A	Vial HCl preserved	A	N/A	2	Y	Absent	MCP-8260-04(14)
L1005083-03B	Vial HCl preserved	A	N/A	2	Y	Absent	MCP-8260-04(14)
L1005083-04A	Vial HCl preserved	A	N/A	2	Y	Absent	MCP-8260-04(14)
L1005083-04B	Vial HCl preserved	A	N/A	2	Y	Absent	MCP-8260-04(14)
L1005083-05A	Vial HCl preserved	A	N/A	2	Y	Absent	MCP-8260-04(14)
L1005083-05B	Vial HCl preserved	A	N/A	2	Y	Absent	MCP-8260-04(14)
L1005083-06A	Vial HCl preserved	A	N/A	2	Y	Absent	MCP-8260-04(14)
L1005083-06B	Vial HCl preserved	A	N/A	2	Y	Absent	MCP-8260-04(14)
L1005083-07A	Vial HCl preserved	A	N/A	2	Y	Absent	MCP-8260-04(14)

*Hold days indicated by values in parentheses

GLOSSARY

Acronyms

EPA - Environmental Protection Agency.

LCS - Laboratory Control Sample: A sample matrix, free from the analytes of interest, spiked with verified known amounts of analytes or a material containing known and verified amounts of analytes.

LCSD - Laboratory Control Sample Duplicate: Refer to LCS.

MS - Matrix Spike Sample: A sample prepared by adding a known mass of target analyte to a specified amount of matrix sample for which an independent estimate of target analyte concentration is available.

MSD - Matrix Spike Sample Duplicate: Refer to MS.

NA - Not Applicable.

NC - Not Calculated: Term is utilized when one or more of the results utilized in the calculation are non-detect at the parameter's reporting unit.

NI - Not Ignitable.

RDL - Reported Detection Limit: The value at which an instrument can accurately measure an analyte at a specific concentration. The RDL includes any adjustments from dilutions, concentrations or moisture content, where applicable.

RPD - Relative Percent Difference: The results from matrix and/or matrix spike duplicates are primarily designed to assess the precision of analytical results in a given matrix and are expressed as relative percent difference (RPD). Values which are less than five times the reporting limit for any individual parameter are evaluated by utilizing the absolute difference between the values; although the RPD value will be provided in the report.

Terms

Analytical Method: Both the document from which the method originates and the analytical reference method. (Example: EPA 8260B is shown as 1,8260B.) The codes for the reference method documents are provided in the References section of the Addendum.

Data Qualifiers

A - Spectra identified as "Aldol Condensation Product".

B - The analyte was detected above the reporting limit in the associated method blank. Flag only applies to associated field samples that have detectable concentrations of the analyte at less than five times (5x) the concentration found in the blank. For DOD-related projects, flag only applies to associated field samples that have detectable concentrations of the analyte at less than ten times (10x) the concentration found in the blank AND the analyte was detected above one-half the reporting limit (or above the reporting limit for common lab contaminants) in the associated method blank.

D - Concentration of analyte was quantified from diluted analysis. Flag only applies to field samples that have detectable concentrations of the analyte.

E - Concentration of analyte exceeds the range of the calibration curve and/or linear range of the instrument.

H - The analysis of pH was performed beyond the regulatory-required holding time of 15 minutes from the time of sample collection.

P - The RPD between the results for the two columns exceeds the method-specified criteria.

Q - The quality control sample exceeds the associated acceptance criteria. Note: This flag is not applicable for matrix spike recoveries when the sample concentration is greater than 4x the spike added or for batch duplicate RPD when the sample concentrations are less than 5x the RDL. (Metals only.)

R - Analytical results are from sample re-analysis.

RE - Analytical results are from sample re-extraction.

J - Estimated value. This represents an estimated concentration for Tentatively Identified Compounds (TICs).

ND - Not detected at the reported detection limit (RDL) for the sample.

REFERENCES

60 Quality Assurance and Quality Control Requirements and Performance Standards for SW-846 Methods. MADEP BWSC. WSC-CAM-IIA (Revision 4), WSC-CAM-V C (Revision 2), WSC-CAM-IIIA (Revision 5). May 2004.

LIMITATION OF LIABILITIES

Alpha Analytical performs services with reasonable care and diligence normal to the analytical testing laboratory industry. In the event of an error, the sole and exclusive responsibility of Alpha Woods Hole Labs shall be to re-perform the work at it's own expense. In no event shall Alpha Analytical be held liable for any incidental, consequential or special damages, including but not limited to, damages in any way connected with the use of, interpretation of, information or analysis provided by Alpha Woods Hole Labs.

We strongly urge our clients to comply with EPA protocol regarding sample volume, preservation, cooling, containers, sampling procedures, holding time and splitting of samples in the field.

Certificate/Approval Program Summary

Last revised March 16, 2010 - Westboro Facility

The following list includes only those analytes/methods for which certification/approval is currently held.
For a complete listing of analytes for the referenced methods, please contact your Alpha Customer Service Representative.

Connecticut Department of Public Health Certificate/Lab ID: PH-0574. ***NELAP Accredited Solid Waste/Soil.***

Drinking Water (Inorganic Parameters: Color, pH, Turbidity, Conductivity, Alkalinity, Chloride, Free Residual Chlorine, Fluoride, Calcium Hardness, Sulfate, Nitrate, Nitrite, Aluminum, Antimony, Arsenic, Barium, Beryllium, Cadmium, Calcium, Chromium, Copper, Iron, Lead, Magnesium, Manganese, Mercury, Molybdenum, Nickel, Potassium, Selenium, Silver, Sodium, Thallium, Vanadium, Zinc, Total Dissolved Solids, Total Organic Carbon, Total Cyanide, Perchlorate. Organic Parameters: Haloacetic Acids, Volatile Organics 524.2, Total Trihalomethanes 524.2, 1,2-Dibromo-3-chloropropane (DBCP), Ethylene Dibromide (EDB).)
Wastewater/Non-Potable Water (Inorganic Parameters: Color, pH, Conductivity, Acidity, Alkalinity, Chloride, Total Residual Chlorine, Fluoride, Total Hardness, Calcium Hardness, Silica, Sulfate, Sulfide, Ammonia, Kjeldahl Nitrogen, Nitrate, Nitrite, O-Phosphate, Total Phosphorus, Aluminum, Antimony, Arsenic, Barium, Beryllium, Boron, Cadmium, Calcium, Chromium, Hexavalent Chromium, Cobalt, Copper, Iron, Lead, Magnesium, Manganese, Mercury, Molybdenum, Nickel, Potassium, Selenium, Silver, Sodium, Strontium, Thallium, Tin, Titanium, Vanadium, Zinc, Total Residue (Solids), Total Dissolved Solids, Total Suspended Solids (non-filterable), BOD, CBOD, COD, TOC, Total Cyanide, Phenolics, Foaming Agents (MBAS), Bromide, Oil and Grease. Organic Parameters: PCBs, Organochlorine Pesticides, Technical Chlordane, Toxaphene, 2,4-D, 2,4,5-T, 2,4,5-TP(Silvex), Acid Extractables (Phenols), Benzidines, Phthalate Esters, Nitrosamines, Nitroaromatics & Isophorone, Polynuclear Aromatic Hydrocarbons, Haloethers, Chlorinated Hydrocarbons, Volatile Organics, Extractable Petroleum Hydrocarbons (ETPH), MA-EPH, MA-VPH.)
Solid Waste/Soil (Inorganic Parameters: Lead in Paint, pH, Aluminum, Antimony, Arsenic, Barium, Beryllium, Boron, Cadmium, Calcium, Chromium, Hexavalent Chromium, Cobalt, Copper, Iron, Lead, Magnesium, Manganese, Mercury, Molybdenum, Nickel, Potassium, Selenium, Silver, Sodium, Thallium, Tin, Vanadium, Zinc, Total Cyanide, Ignitability, Phenolics, Corrosivity, TCLP Leach (1311), Reactivity. Organic Parameters: PCBs, Organochlorine Pesticides, Technical Chlordane, Toxaphene, Extractable Petroleum Hydrocarbons (ETPH), MA-EPH, MA-VPH, Dicamba, 2,4-D, 2,4,5-T, 2,4,5-TP(Silvex), Volatile Organics, Acid Extractables (Phenols), 3.3'-Dichlorobenzidine, Phthalates, Nitrosamines, Nitroaromatics & Cyclic Ketones, PAHs, Haloethers, Chlorinated Hydrocarbons.)

Maine Department of Human Services Certificate/Lab ID: 2009024.
Drinking Water (Inorganic Parameters: SM9215B, 9221E, 9222B, 9222D, 9223B, EPA 180.1, 300.0, 353.2, SM2130B, 2320B, 4500Cl-D, 4500CN-C, 4500CN-E, 4500F-C, 4500H+B,4500NO3-F, EPA 200.7, EPA 200.8, 245.1. Organic Parameters: 504.1, 524.2, SM 6251B.)
Wastewater/Non-Potable Water (Inorganic Parameters: EPA 120.1, 1664A, 350.1, 351.1, 353.2, 410.4, 420.1, Lachat 10-107-06-1-B, SM2320B, 2340B, 2510B, 2540C, 2540D, 426C, 4500Cl-D, 4500Cl-E, 4500CN-C, 4500CN-E, 4500F-B, 4500F-C, 4500H+B, 4500Norg-B, 4500Norg-C, 4500NH3-B, 4500NH3-G, 4500NH3-H, 4500NO3-F, 4500P-B.5, 4500P-E, 5210B, 5220D, 5310C, EPA 200.7, 200.8, 245.1. Organic Parameters: 608, 624.)

Massachusetts Department of Environmental Protection Certificate/Lab ID: M-MA086.
Drinking Water
Inorganic Parameters: (EPA 200.8 for: Sb,As,Ba,Be,Cd,Cr,Cu,Pb,Ni,Se,Tl)
(EPA 200.7 for: Ba,Be,Ca,Cd,Cr,Cu,Na,Ni) 245.1, (300.0 for: Nitrate-N, Fluoride, Sulfate)
353.2 for: Nitrate-N, Nitrite-N; SM4500NO3-F, 4500F-C, 4500CN-CE, EPA 180.1, SM2130B, SM4500Cl-D, 2320B, SM2540C, SM4500H-B.
Organic Parameters: (EPA 524.2 for: Trihalomethanes, Volatile Organics)
(504.1 for: 1,2-Dibromoethane, 1,2-Dibromo-3-Chloropropane), 314.0, 332.
Microbiology Parameters: SM9215B; ENZ. SUB. SM9223; MF-SM9222D
Non-Potable Water
Inorganic Parameters:, (EPA 200.8 for: Al,Sb,As,Be,Cd,Cr,Cu,Pb,Mn,Ni,Se,Ag,Tl,Zn)
(EPA 200.7 for: Al,Sb,As,Be,Cd,Cr,Co,Cu,Fe,Pb,Mn,Mo,Ni,Se,Ag,Sr,Ti,Tl, V,Zn,Ca,Mg,Na,K)
245.1, SM4500H,B, EPA 120.1, SM2510B, 2540C, 2540B, 2340B, 2320B, 4500CL-E, 4500F-BC, 426C, SM4500NH3-BH, (EPA 350.1 for: Ammonia-N), LACHAT 10-107-06-1-B for Ammonia-N, SM4500NO3-F, 353.2 for Nitrate-N, SM4500NH3-B,C-Titr, SM4500NH3-BC-NES, EPA 351.1, SM4500P-E, 4500P-B,E, 5220D, EPA 410.4, SM 5210B, 5310C, 4500CL-D, EPA 1664, SM14 510AC, EPA 420, SM4500-CN-CE, SM2540D.
Organic Parameters: (EPA 624 for Volatile Halocarbons, Volatile Aromatics)
(608 for: Chlordane, Aldrin, Dieldrin, DDD, DDE, DDT, Heptachlor, Heptachlor Epoxide, PCBs-Water), EPA 625 for SVOC Acid Extractables and SVOC Base/Neutral Extractables, 600/4-81-045-PCB-Oil

New Hampshire Department of Environmental Services Certificate/Lab ID: 200307. ***NELAP Accredited.***
Drinking Water (Inorganic Parameters: SM6215B, 9222B, 9223B Colilert, EPA 200.7, 200.8, 245.2, 120.1, 300.0, 314.0, SM4500CN-E, 4500H+B, 4500NO3-F, 2320B, 2510B, 2540C, 4500F-C, 5310C, 2120B, EPA 331.0. Organic Parameters: 504.1, 524.2, SM6251B.)
Non-Potable Water (Inorganic Parameters: SM9222D, 9221B, 9222B, 9221E-EC, EPA 200.7, 200.8, 245.1, 245.2, SW-846 6010B, 6020, 7196A, 7470A, SM3500-CR-D, EPA 120.1, 300.0, 350.1, 351.1, 353.2, 420.1, 1664A, SW-846 9010, 9030, 9040B, SM426C, SM2310B, 2540B, 2540D, 4500H+B, 4500NH3-H, 4500NH3-E, 4500NO2-B, 4500P-E, 4500-S2-D, 5210B, 2320B, 2540C, 4500F-C, 5310C, 5540C, LACHAT 10-117-07-1-B, LACHAT 10-107-06-1-B, LACHAT 10-107-04-1-C, LACHAT 10-107-04-1-J, LACHAT 10-117-07-1-A, SM4500CL-E, LACHAT 10-204-00-1-A, LACHAT 10-107-06-2-D. Organic Parameters: SW-846 3005A, 3015A, 3510C, 5030B, 8021B, 8260B, 8270C, 8330, EPA 624, 625, 608, SW-846 8082, 8081A.)
Solid & Chemical Materials (Inorganic Parameters: SW-846 6010B, 7196A, 7471A, 7.3.3.2, 7.3.4.2, 1010, 1030, 9010, 9012A, 9014, 9030B, 9040, 9045C, 9050C, 1311, 3005A, 3050B, 3051A. Organic Parameters: SW-846 3540C, 3545, 3580A, 5030B, 5035, 8021B, 8260B, 8270C, 8330, 8151A, 8082, 8081A.)

New Jersey Department of Environmental Protection Certificate/Lab ID: MA935. ***NELAP Accredited.***
Drinking Water (Inorganic Parameters: SM9222B, 9221E, 9223B, 9215B, 4500NO3-F, 4500F-C, EPA 300.0, 200.7, 2540C, 2320B, 314.0, SM2120B, 2510B, 5310C, SM4500H-B, EPA 200.8, 245.2. Organic Parameters: 504.1, SM6251B, 524.2.)
Non-Potable Water (Inorganic Parameters: SM5210B, EPA 410.4, SM5220D, 4500Cl-D, EPA 300.0, SM2120B, SM4500F-BC, EPA 200.7, 351.1, LACHAT 10-107-06-2-D, EPA 353.2, SM4500NO3-F, 4500NO2-B, EPA 1664A, SM5310B, C or D, 4500-PE, EPA 420.1, SM4500P-B5+E, 2540B, 2540C, 2540D, EPA 120.1, SM2510B, SM15 426C, SM9221CE, 9222D, 9221B, 9222B, 9215B, 2310B, 2320B, 4500NH3-H, 4500-S D, EPA 350.1, SM5210B, SW-846 3015, 6020, 7470A, 5540C, 4500H-B, EPA 200.8, SM3500Cr-D, EPA 245.1, 245.2, SW-846 9040B, 3005A, EPA 6010B, 7196A, SW-846 9010B, 9030B. Organic Parameters: SW-846 8260B, 8270C, 3510C, EPA 608, 624, 625, SW-846 5030B, 8021B, 8081A, 8082, 8151A, 8330, NJ OQA-QAM-025 Rev.7.)
Solid & Chemical Materials (Inorganic Parameters: SW-846 9040B, 3005A, 6010B, 7196A, 5030B, 9010B, 9030B, 1030, 1311, 3050B, 3051, 7471A, 9014, 9012A, 9045C, 9050A, 9065. Organic Parameters: SW-846 8021B, 8081A, 8082, 8151A, 8330, 8260B, 8270C, 1311, 1312, 3540C, 3545, 3550B, 3580A, 5035L, 5035H, NJ OQA-QAM-025 Rev.7.)

New York Department of Health Certificate/Lab ID: 11148. ***NELAP Accredited.***
Drinking Water (Inorganic Parameters: SM9223B, 9222B, 9215B, EPA 200.8, 200.7, 245.2, SM5310C, EPA 314.0, 332.0, SM2320B, EPA 300.0, SM2120B, 4500CN-E, 4500F-C, 4500H-B, 4500NO3-F, 2540C, EPA 120.1, SM 2510B. Organic Parameters: EPA 524.2, 504.1.)
Non-Potable Water (Inorganic Parameters: SM9221E, 9222D, 9221B, 9222B, 9215B, 5210B, EPA 410.4, SM5220D, 2310B-4a, 2320B, EPA 200.7, 300.0, LACHAT 10-117-07-1A or B, SM4500Cl-E, 4500F-C, SM15 426C, EPA 350.1, LACHAT 10-107-06-1-B, SM4500NH3-H, EPA 351.1, LACHAT 10-107-06-2, EPA 353.2, LACHAT 10-107-041-C, SM4500-NO3-F, 4500-NO2-B, 4500P-E, 2540C, 2540B, 2540D, EPA 200.8, EPA 6010B, 6020, EPA 7196A, S\M3500Cr-D, EPA 245.1, 245.2, 7470A, SM2120B, SM4500-CN-E LACHAT 10-204-00-1-A, EPA 9040B, SM4500-HB, EPA 1664A, SM5310C, EPA 420.1, SM14 510C, EPA 120.1, SM2510B, SM4500S-D, SM5540C, EPA 3005A, 3015. Organic Parameters: EPA 624, 8260B, 8270C, 625, 608, 8081A, 8151A, 8330, 8082, EPA 3510C, 5030B, 9010B, 9030B.)
Solid & Hazardous Waste (Inorganic Parameters: 1010, 1030, SW-846 Ch 7 Sec 7.3, EPA 6010B, 7196A, 7471A, 9012A, 9014, 9040B, 9045C, 9065, 9050, EPA 1311, 1312, 3005A, 3050B, 9010B, 9030B. Organic Parameters: EPA 8260B, 8270C, 8081A, 8151A, 8330, 8082, 3540C, 3545, 3546, 3580, 5030B, 5035.)

North Carolina Department of the Environment and Natural Resources Certificate/Lab ID : 666. Organic Parameters: MA-EPH, MA-VPH.

Pennsylvania Department of Environmental Protection Certificate/Lab ID : 68-03671. ***NELAP Accredited.***
Non-Potable Water (Organic Parameters: EPA 3510C, 5030B, 625, 624. 608, 8081A, 8082, 8151A, 8260B, 8270C, 8330)
Solid & Hazardous Waste (Inorganic Parameters: EPA 1010, 1030, 1311, 3050B, 3051, 6010B, EPA 7.3.3.2, EPA 7.3.4.2, 7196A, 7471A, 9010B, 9012A, 9014, 9040B, 9045C, 9050, 9065. Organic Parameters: 3540C, 3545, 3580A, 5035, 8021B, 8081A, 8082, 8151A, 8260B, 8270C, 8330)

Rhode Island Department of Health Certificate/Lab ID: LAO00065. ***NELAP Accredited via NY-DOH.***
Refer to MA-DEP Certificate for Potable and Non-Potable Water.
Refer to NY-DOH Certificate for Potable and Non-Potable Water.

Texas Commisson on Environmental Quality Certificate/Lab ID: T104704476-09-1. ***NELAP Accredited.***
Non-Potable Water (Inorganic Parameters: EPA 120.1, 1664, 200.7, 200.8, 245.1, 245.2, 300.0, 350.1, 351.1, 353.2, 376.2, 410.4, 420.1, 6010, 6020, 7196, 7470, 9040, SM 2120B, 2310B, 2320B, 2510B, 2540B, 2540C, 2540D, 426C, 4500CL-E, 4500CN-E, 4500F-C, 4500H+B, 4500NH3-H, 4500NO2B, 4500P-E, 4500 S2¯D, 510C, 5210B, 5220D, 5310C, 5540C. Organic Parameters: EPA 608, 624, 625, 8081, 8082, 8151, 8260, 8270, 8330.)

Solid & Hazardous Waste (Inorganic Parameters: EPA 1311, 1312, 9012, 9014, 9040, 9045, 9050, 9065.)

Utah Department of Health Certificate/Lab ID: AAMA. ***NELAP Accredited.***
Non-Potable Water (Inorganic Parameters: Chloride EPA 300.0)

Department of Defense Certificate/Lab ID: L2217.
Drinking Water (Inorganic Parameters: SM 4500H-B. Organic Parameters: EPA 524.2, 504.1.)

Non-Potable Water (Inorganic Parameters: EPA 200.7, 200.8, 6010B, 6020, 245.1, 245.2, 7470A, 9040B, 300.0, 9251, 9038, 350.1, 353.2, 351.1, 314, 120.1, 9050A , 410.4, 9060, 1664, 420.1, LACHAT 10-107-06-1-B, SM 4500CN-E, 4500H-B, 4500CL-E, 4500F-BC, 4500SO4-E, 426C, 4500NH3-B, 4500NH3-H, 4500NO3-F, 4500NO2-B, 4500Norg-C, 4500PE, 2510B, 5540C, 5220D, 5310C, 2540B, 2540C, 2540D, 510C, 4500S2-AD, 3005A, 3015, 9010B, 9030B. Organic Parameters: EPA 8260B, 8270C, 8330, 625, 8082, 8151A, 8081A, 3510C, 5030B.)

Solid & Hazardous Waste (Inorganic Parameters: EPA 200.7, 6010B, 7471A, 9040B, 9045C, 9065, 420.1, 9012A, 6860, 1311, 1312, 3050B, 9030B, 3051, 9010B, 3540C, SM 510ABC, 4500CN-CE, 2540G, SW-846 7.3, Organic Parameters: EPA 8260B, 8270C, 8330, 8082, 8081A, 8151A, 3545, 3546, 3580, 5035.)

Analytes Not Accredited by NELAP
Certification is not available by NELAP for the following analytes: **EPA 8260B:** Freon-113, 1,2,4,5-Tetramethylbenzene, 4-Ethyltoluene. **EPA 8330A:** PETN, Picric Acid, Nitroglycerine, 2,6-DANT, 2,4-DANT. **EPA 8270C:** Methyl naphthalene, Dimethyl naphthalene, Total Methylnapthalenes, Total Dimethylnaphthalenes, 1,4-Diphenylhydrazine (Azobenzene). **EPA 625:** 4-Chloroaniline. **EPA 350.1** for Ammonia in a Soil matrix.

CHAIN OF CUSTODY

PAGE 1 OF 1

Date Rec'd in Lab: 4/8/10

ALPHA Job #: L1005083

WESTBORO, MA
TEL: 508-898-9220
FAX: 508-898-9193

MANSFIELD, MA
TEL: 508-822-9300
FAX: 508-822-3288

Client Information

Client: TRC
Address: 650 Suffolk St
Lowell MA 01854
Phone: 978-970-5600
Fax: 978-453-1995
Email: dSullivan@TRCsolutions.com

☐ These samples have been previously analyzed by Alpha

Project Information

Project Name: City of New Bedford
Project Location: NBHS
Project #: 115058
Project Manager: David Sullivan
ALPHA Quote #: 20090630

Turn-Around Time

☒ Standard 5 day ☐ RUSH (only confirmed if pre-approved!)
Date Due: 4/15/10 Time:

Report Information - Data Deliverables

☐ FAX ☒ EMAIL
☐ ADEx ☐ Add'l Deliverables

Billing Information

☐ Same as Client Info PO #: 22520

Regulatory Requirements/Report Limits

State /Fed Program: MCP/GWT,2,3 Criteria

MA MCP PRESUMPTIVE CERTAINTY --- CT REASONABLE CONFIDENCE PROTO

☒ Yes ☐ No Are MCP Analytical Methods Required?
☒ Yes ☐ No Is Matrix Spike (MS) Required on this SDG? (If yes see note in Comments)
☐ Yes ☒ No Are CT RCP (Reasonable Confidence Protocols) Required?

Other Project Specific Requirements/Comments/Detection Limits:

If MS is required, indicate in Sample Specific Comments which samples and what tests MS to be performed.
(Note: All *CAM* methods for inorganic analyses require MS every 20 soil samples)

ANALYSIS: VOCs 8260 + TO 15 LIST

SAMPLE HANDLING
Filtration
☐ Done
☐ Not needed
☐ Lab to do
Preservation
☐ Lab to do
(Please specify below)

ALPHA Lab ID (Lab Use Only)	Sample ID	Collection Date	Collection Time	Sample Matrix	Sampler's Initials	VOCs 8260 + TO 15 LIST	Sample Specific Comments	Total # Bottles
05083.1	MW-122	4/8/10	0825	GW	AW	X		
2	MW-22		0925		AW	X		
3	MW-21		1050		JG	X		
4	MW-23		1210		AW	X		
5	MW-20		1345		JG	X		
6	MW-5		1355		AW	X		
	~~MW-24~~				~~AW~~	~~X~~	~~MS/MSD~~	
7	Trip Blank							

PLEASE ANSWER QUESTIONS ABOVE!

IS YOUR PROJECT MA MCP *or* CT RCP?

	Relinquished By:	Date/Time	Received By:	Date/Time
	[illegible]	4/8/2010 4/8/10 1650	[illegible]	4/8/10 1650

Container Type: V
Preservative: B

Please print clearly, legibly and completely. Samples can not be logged in and turnaround time clock will not start until any ambiguities are resolved. All samples submitted are subject to Alpha's Terms and Conditions. See reverse side.

FORM NO: 01-01 (rev. 18-Jan-2010)

ANALYTICAL REPORT

Lab Number:	L1005200
Client:	TRC Environmental Consultants Wannalancit Mills 650 Suffolk Street Lowell, MA 01854
ATTN:	David Sullivan
Phone:	(978) 656-3565
Project Name:	CITY OF NEW BEDFORD
Project Number:	115058
Report Date:	04/16/10

Certifications & Approvals: MA (M-MA086), NY NELAC (11148), CT (PH-0574), NH (2003), NJ (MA935), RI (LAO00065), ME (MA0086), PA (Registration #68-03671), USDA (Permit #S-72578), US Army Corps of Engineers, Naval FESC.

Eight Walkup Drive, Westborough, MA 01581-1019
508-898-9220 (Fax) 508-898-9193 800-624-9220 - www.alphalab.com

Project Name: CITY OF NEW BEDFORD
Project Number: 115058

Lab Number: L1005200
Report Date: 04/16/10

Alpha Sample ID	Client ID	Sample Location	Collection Date/Time
L1005200-01	MW-24	NBHS	04/08/10 16:35
L1005200-02	MW-4	NBHS	04/09/10 09:00
L1005200-03	MW-18	NBHS	04/09/10 11:00
L1005200-04	TRIP BLANK	NBHS	04/09/10 00:00

MADEP MCP Response Action Analytical Report Certification

This form provides certifications for all samples performed by MCP methods. Please refer to the Sample Results and Container Information sections of this report for specification of MCP methods used for each analysis. The following questions pertain only to MCP Analytical Methods.

An affirmative response to questions A, B, C & D is required for "Presumptive Certainty" status		
A	Were all samples received by the laboratory in a condition consistent with those described on their Chain-of-Custody documentation for the data set?	YES
B	Were all QA/QC procedures required for the specified analytical methods(s) included in this report followed, including the requirement to note and discuss in a narrative QC data that did not meet appropriate performance standards or guidelines?	YES
C	Does the analytical data included in this report meet all the requirements for "Presumptive Certainty", as described in section 2.0 of the MADEP document CAM VII A, "Quality Assurance and Quality Control Guidelines for the Acquisition and Reporting of Analytical Data"?	YES
D	VPH and EPH methods only: Was the VPH or EPH method run without significant modifications, as specified in Section 11.3?	N/A

A response to questions E and F is required for "Presumptive Certainty" status		
E	Were all QC performance standards and recommendations for the specified method(s) achieved?	NO
F	Were results for all analyte-list compounds/elements for the specified method(s) reported?	YES

For any questions answered "No", please refer to the case narrative section on the following page(s).

Please note that sample matrix information is located in the Sample Results section of this report.

Case Narrative

The samples were received in accordance with the Chain of Custody and no significant deviations were encountered during the preparation or analysis unless otherwise noted. Sample Receipt, Container Information, and the Chain of Custody are located at the back of the report.

Results contained within this report relate only to the samples submitted under this Alpha Lab Number and meet all of the requirements of NELAC, for all NELAC accredited parameters. The data presented in this report is organized by parameter (i.e. VOC, SVOC, etc.). Sample specific Quality Control data (i.e. Surrogate Spike Recovery) is reported at the end of the target analyte list for each individual sample, followed by the Laboratory Batch Quality Control at the end of each parameter. If a sample was re-analyzed or re-extracted due to a required quality control corrective action and if both sets of data are reported, the Laboratory ID of the re-analysis or re-extraction is designated with an "R" or "RE", respectively. When multiple Batch Quality Control elements are reported (e.g. more than one LCS), the associated samples for each element are noted in the grey shaded header line of each data table. Any Laboratory Batch, Sample Specific % recovery or RPD value that is outside the listed Acceptance Criteria is bolded in the report. Definitions of all data qualifiers and acronyms used in this report are provided in the Glossary located at the back of the report.

Please see the associated ADEx data file for a comparison of laboratory reporting limits that were achieved with the regulatory Numerical Standards requested on the Chain of Custody.

For additional information, please contact Client Services at 800-624-9220.

MCP Related Narratives

Volatile Organics

L1005200-01 was processed against a calibration curve that utilized a quadratic fit for 1,2-Dibromo-3-chloropropane.

L1005200-02, -03, and -04 were processed against a calibration curve that utilized a quadratic fit for Carbon tetrachloride, Dibromochloromethane, 1,1,1-Trichloroethane, trans-1,3-Dichloropropene, cis-1,3-Dichloropropene, Bromoform, 2-Butanone, 2-Hexanone, 2,2-Dichloropropane, 1,2-Dibromoethane, 1,1,1,2-Tetrachloroethane, n-Butylbenzene, Hexachlorobutadiene, Naphthalene and 1,2,3-Trichlorobenzene.

In reference to question E:

The WG408434-1/-2 LCS/LCSD recoveries, associated with L1005200-01, are outside the acceptance criteria for several compounds; however, they have been identified as "difficult" analytes. The results of the associated sample are reported; however, all results are considered to have a potentially high bias for Bromoform (LCS at

Case Narrative (continued)

134%), Acetone (214%/181%), and 1,4-Dioxane (LCSD at 170%); and a potentially low bias for Bromomethane (65%/66%) and Dichlorodifluoromethane (45%/42%).

The WG408475-1/-2 LCS/LCSD recoveries associated with L1005200-02, -03 and -04 are below the acceptance criteria for Dichlorodifluoromethane (45%/44%) and Carbon disulfide (61%/68%); however, they have been identified as "difficult" analytes. The results of the associated samples are reported; however, all results are considered to have a potentially low bias for these compounds.

The WG408434-4/-5 MS/MSD recoveries, associated with L1005200-01, are outside the acceptance criteria for several compounds; however, they have been identified as "difficult" analytes. The results of the associated sample are reported; however, all results are considered to have a potentially high bias for Bromoform (133%/135%) and Acetone (165%/163%) and a potentially low bias for Bromomethane (MS at 68%), Dichlorodifluoromethane (32%/32%), and 1,4-Dioxane (MS at 36%). In addition, the associated MS/MSD RPD is above the acceptance criteria for 1,4-Dioxane (93%).

The WG408434-4 MS recovery, associated with L1005200-01, was below the acceptance criteria for Naphthalene (66%); however, the associated LCS/LCSD recoveries were within criteria. The result of the sample utilized for the MS/MSD is considered to have a potentially low bias for this compound.

The WG408434-4/-5 MS/MSD RPD, associated with L1005200-01, is above the acceptance criteria for 1,2-Dibromo-3-chloropropane (37%); however, the individual MS/MSD recoveries are within method limits.

I, the undersigned, attest under the pains and penalties of perjury that, to the best of my knowledge and belief and based upon my personal inquiry of those responsible for providing the information contained in this analytical report, such information is accurate and complete. This certificate of analysis is not complete unless this page accompanies any and all pages of this report.

Authorized Signature: Elizabeth A. Simmons

Title: Technical Director/Representative Date: 04/16/10

ORGANICS

VOLATILES

Project Name:	CITY OF NEW BEDFORD	**Lab Number:**	L1005200
Project Number:	115058	**Report Date:**	04/16/10

SAMPLE RESULTS

Lab ID:	L1005200-01	Date Collected:	04/08/10 16:35
Client ID:	MW-24	Date Received:	04/09/10
Sample Location:	NBHS	Field Prep:	Not Specified
Matrix:	Water		
Analytical Method:	60,8260B		
Analytical Date:	04/15/10 18:58		
Analyst:	MM		

Parameter	Result	Qualifier	Units	RDL	Dilution Factor
MCP Volatile Organics - Westborough Lab					
Methylene chloride	ND		ug/l	5.0	1
1,1-Dichloroethane	ND		ug/l	1.0	1
Chloroform	ND		ug/l	1.0	1
Carbon tetrachloride	ND		ug/l	1.0	1
1,2-Dichloropropane	ND		ug/l	1.0	1
Dibromochloromethane	ND		ug/l	1.0	1
1,1,2-Trichloroethane	ND		ug/l	1.0	1
Tetrachloroethene	ND		ug/l	1.0	1
Chlorobenzene	ND		ug/l	1.0	1
Trichlorofluoromethane	ND		ug/l	2.0	1
1,2-Dichloroethane	ND		ug/l	1.0	1
1,1,1-Trichloroethane	ND		ug/l	1.0	1
Bromodichloromethane	ND		ug/l	1.0	1
trans-1,3-Dichloropropene	ND		ug/l	0.50	1
cis-1,3-Dichloropropene	ND		ug/l	0.50	1
1,1-Dichloropropene	ND		ug/l	2.0	1
Bromoform	ND		ug/l	2.0	1
1,1,2,2-Tetrachloroethane	ND		ug/l	1.0	1
Benzene	ND		ug/l	1.0	1
Toluene	ND		ug/l	1.0	1
Ethylbenzene	ND		ug/l	1.0	1
Chloromethane	ND		ug/l	2.0	1
Bromomethane	ND		ug/l	5.0	1
Vinyl chloride	4.8		ug/l	1.0	1
Chloroethane	ND		ug/l	2.0	1
1,1-Dichloroethene	ND		ug/l	1.0	1
trans-1,2-Dichloroethene	ND		ug/l	1.0	1
Trichloroethene	ND		ug/l	1.0	1
1,2-Dichlorobenzene	ND		ug/l	1.0	1
1,3-Dichlorobenzene	ND		ug/l	1.0	1

Project Name:	CITY OF NEW BEDFORD	**Lab Number:**	L1005200
Project Number:	115058	**Report Date:**	04/16/10

SAMPLE RESULTS

Lab ID:	L1005200-01	Date Collected:	04/08/10 16:35
Client ID:	MW-24	Date Received:	04/09/10
Sample Location:	NBHS	Field Prep:	Not Specified

Parameter	Result	Qualifier	Units	RDL	Dilution Factor
MCP Volatile Organics - Westborough Lab					
1,4-Dichlorobenzene	ND		ug/l	1.0	1
Methyl tert butyl ether	ND		ug/l	2.0	1
p/m-Xylene	ND		ug/l	2.0	1
o-Xylene	ND		ug/l	1.0	1
cis-1,2-Dichloroethene	1.8		ug/l	1.0	1
Dibromomethane	ND		ug/l	2.0	1
1,2,3-Trichloropropane	ND		ug/l	2.0	1
Styrene	ND		ug/l	1.0	1
Dichlorodifluoromethane	ND		ug/l	2.0	1
Acetone	ND		ug/l	5.0	1
Carbon disulfide	ND		ug/l	2.0	1
2-Butanone	ND		ug/l	5.0	1
4-Methyl-2-pentanone	ND		ug/l	5.0	1
2-Hexanone	ND		ug/l	5.0	1
Bromochloromethane	ND		ug/l	2.0	1
Tetrahydrofuran	ND		ug/l	10	1
2,2-Dichloropropane	ND		ug/l	2.0	1
1,2-Dibromoethane	ND		ug/l	2.0	1
1,3-Dichloropropane	ND		ug/l	2.0	1
1,1,1,2-Tetrachloroethane	ND		ug/l	1.0	1
Bromobenzene	ND		ug/l	2.0	1
n-Butylbenzene	ND		ug/l	2.0	1
sec-Butylbenzene	ND		ug/l	2.0	1
tert-Butylbenzene	ND		ug/l	2.0	1
o-Chlorotoluene	ND		ug/l	2.0	1
p-Chlorotoluene	ND		ug/l	2.0	1
1,2-Dibromo-3-chloropropane	ND		ug/l	5.0	1
Hexachlorobutadiene	ND		ug/l	0.60	1
Isopropylbenzene	ND		ug/l	2.0	1
p-Isopropyltoluene	ND		ug/l	2.0	1
Naphthalene	ND		ug/l	5.0	1
n-Propylbenzene	ND		ug/l	2.0	1
1,2,3-Trichlorobenzene	ND		ug/l	2.0	1
1,2,4-Trichlorobenzene	ND		ug/l	2.0	1
1,3,5-Trimethylbenzene	ND		ug/l	2.0	1
1,2,4-Trimethylbenzene	ND		ug/l	2.0	1
Ethyl ether	ND		ug/l	2.0	1

Project Name:	CITY OF NEW BEDFORD	**Lab Number:**	L1005200
Project Number:	115058	**Report Date:**	04/16/10

SAMPLE RESULTS

Lab ID:	L1005200-01	Date Collected:	04/08/10 16:35
Client ID:	MW-24	Date Received:	04/09/10
Sample Location:	NBHS	Field Prep:	Not Specified

Parameter	Result	Qualifier	Units	RDL	Dilution Factor
MCP Volatile Organics - Westborough Lab					
Isopropyl Ether	ND		ug/l	2.0	1
Ethyl-Tert-Butyl-Ether	ND		ug/l	2.0	1
Tertiary-Amyl Methyl Ether	ND		ug/l	2.0	1
1,4-Dioxane	ND		ug/l	250	1

Surrogate	% Recovery	Qualifier	Acceptance Criteria
1,2-Dichloroethane-d4	92		70-130
Toluene-d8	100		70-130
4-Bromofluorobenzene	96		70-130
Dibromofluoromethane	92		70-130

Project Name:	CITY OF NEW BEDFORD	**Lab Number:**	L1005200
Project Number:	115058	**Report Date:**	04/16/10

SAMPLE RESULTS

Lab ID:	L1005200-02	Date Collected:	04/09/10 09:00
Client ID:	MW-4	Date Received:	04/09/10
Sample Location:	NBHS	Field Prep:	Not Specified
Matrix:	Water		
Analytical Method:	60,8260B		
Analytical Date:	04/16/10 08:53		
Analyst:	MM		

Parameter	Result	Qualifier	Units	RDL	Dilution Factor
MCP Volatile Organics - Westborough Lab					
Methylene chloride	ND		ug/l	5.0	1
1,1-Dichloroethane	ND		ug/l	1.0	1
Chloroform	ND		ug/l	1.0	1
Carbon tetrachloride	ND		ug/l	1.0	1
1,2-Dichloropropane	ND		ug/l	1.0	1
Dibromochloromethane	ND		ug/l	1.0	1
1,1,2-Trichloroethane	ND		ug/l	1.0	1
Tetrachloroethene	ND		ug/l	1.0	1
Chlorobenzene	ND		ug/l	1.0	1
Trichlorofluoromethane	ND		ug/l	2.0	1
1,2-Dichloroethane	ND		ug/l	1.0	1
1,1,1-Trichloroethane	ND		ug/l	1.0	1
Bromodichloromethane	ND		ug/l	1.0	1
trans-1,3-Dichloropropene	ND		ug/l	0.50	1
cis-1,3-Dichloropropene	ND		ug/l	0.50	1
1,1-Dichloropropene	ND		ug/l	2.0	1
Bromoform	ND		ug/l	2.0	1
1,1,2,2-Tetrachloroethane	ND		ug/l	1.0	1
Benzene	ND		ug/l	1.0	1
Toluene	ND		ug/l	1.0	1
Ethylbenzene	ND		ug/l	1.0	1
Chloromethane	ND		ug/l	2.0	1
Bromomethane	ND		ug/l	5.0	1
Vinyl chloride	ND		ug/l	1.0	1
Chloroethane	ND		ug/l	2.0	1
1,1-Dichloroethene	ND		ug/l	1.0	1
trans-1,2-Dichloroethene	ND		ug/l	1.0	1
Trichloroethene	ND		ug/l	1.0	1
1,2-Dichlorobenzene	ND		ug/l	1.0	1
1,3-Dichlorobenzene	ND		ug/l	1.0	1

Project Name:	CITY OF NEW BEDFORD	**Lab Number:**	L1005200
Project Number:	115058	**Report Date:**	04/16/10

SAMPLE RESULTS

Lab ID:	L1005200-02	Date Collected:	04/09/10 09:00
Client ID:	MW-4	Date Received:	04/09/10
Sample Location:	NBHS	Field Prep:	Not Specified

Parameter	Result	Qualifier	Units	RDL	Dilution Factor
MCP Volatile Organics - Westborough Lab					
1,4-Dichlorobenzene	ND		ug/l	1.0	1
Methyl tert butyl ether	ND		ug/l	2.0	1
p/m-Xylene	ND		ug/l	2.0	1
o-Xylene	ND		ug/l	1.0	1
cis-1,2-Dichloroethene	ND		ug/l	1.0	1
Dibromomethane	ND		ug/l	2.0	1
1,2,3-Trichloropropane	ND		ug/l	2.0	1
Styrene	ND		ug/l	1.0	1
Dichlorodifluoromethane	ND		ug/l	2.0	1
Acetone	ND		ug/l	5.0	1
Carbon disulfide	ND		ug/l	2.0	1
2-Butanone	ND		ug/l	5.0	1
4-Methyl-2-pentanone	ND		ug/l	5.0	1
2-Hexanone	ND		ug/l	5.0	1
Bromochloromethane	ND		ug/l	2.0	1
Tetrahydrofuran	ND		ug/l	10	1
2,2-Dichloropropane	ND		ug/l	2.0	1
1,2-Dibromoethane	ND		ug/l	2.0	1
1,3-Dichloropropane	ND		ug/l	2.0	1
1,1,1,2-Tetrachloroethane	ND		ug/l	1.0	1
Bromobenzene	ND		ug/l	2.0	1
n-Butylbenzene	ND		ug/l	2.0	1
sec-Butylbenzene	ND		ug/l	2.0	1
tert-Butylbenzene	ND		ug/l	2.0	1
o-Chlorotoluene	ND		ug/l	2.0	1
p-Chlorotoluene	ND		ug/l	2.0	1
1,2-Dibromo-3-chloropropane	ND		ug/l	5.0	1
Hexachlorobutadiene	ND		ug/l	0.60	1
Isopropylbenzene	ND		ug/l	2.0	1
p-Isopropyltoluene	ND		ug/l	2.0	1
Naphthalene	ND		ug/l	5.0	1
n-Propylbenzene	ND		ug/l	2.0	1
1,2,3-Trichlorobenzene	ND		ug/l	2.0	1
1,2,4-Trichlorobenzene	ND		ug/l	2.0	1
1,3,5-Trimethylbenzene	ND		ug/l	2.0	1
1,2,4-Trimethylbenzene	ND		ug/l	2.0	1
Ethyl ether	ND		ug/l	2.0	1

Project Name:	CITY OF NEW BEDFORD	**Lab Number:**	L1005200
Project Number:	115058	**Report Date:**	04/16/10

SAMPLE RESULTS

Lab ID:	L1005200-02	Date Collected:	04/09/10 09:00
Client ID:	MW-4	Date Received:	04/09/10
Sample Location:	NBHS	Field Prep:	Not Specified

Parameter	Result	Qualifier	Units	RDL	Dilution Factor
MCP Volatile Organics - Westborough Lab					
Isopropyl Ether	ND		ug/l	2.0	1
Ethyl-Tert-Butyl-Ether	ND		ug/l	2.0	1
Tertiary-Amyl Methyl Ether	ND		ug/l	2.0	1
1,4-Dioxane	ND		ug/l	250	1

Surrogate	% Recovery	Qualifier	Acceptance Criteria
1,2-Dichloroethane-d4	102		70-130
Toluene-d8	98		70-130
4-Bromofluorobenzene	105		70-130
Dibromofluoromethane	96		70-130

Project Name:	CITY OF NEW BEDFORD	**Lab Number:**	L1005200
Project Number:	115058	**Report Date:**	04/16/10

SAMPLE RESULTS

Lab ID:	L1005200-03	Date Collected:	04/09/10 11:00
Client ID:	MW-18	Date Received:	04/09/10
Sample Location:	NBHS	Field Prep:	Not Specified
Matrix:	Water		
Analytical Method:	60,8260B		
Analytical Date:	04/16/10 09:25		
Analyst:	MM		

Parameter	Result	Qualifier	Units	RDL	Dilution Factor
MCP Volatile Organics - Westborough Lab					
Methylene chloride	ND		ug/l	5.0	1
1,1-Dichloroethane	ND		ug/l	1.0	1
Chloroform	ND		ug/l	1.0	1
Carbon tetrachloride	ND		ug/l	1.0	1
1,2-Dichloropropane	ND		ug/l	1.0	1
Dibromochloromethane	ND		ug/l	1.0	1
1,1,2-Trichloroethane	ND		ug/l	1.0	1
Tetrachloroethene	ND		ug/l	1.0	1
Chlorobenzene	ND		ug/l	1.0	1
Trichlorofluoromethane	ND		ug/l	2.0	1
1,2-Dichloroethane	ND		ug/l	1.0	1
1,1,1-Trichloroethane	ND		ug/l	1.0	1
Bromodichloromethane	ND		ug/l	1.0	1
trans-1,3-Dichloropropene	ND		ug/l	0.50	1
cis-1,3-Dichloropropene	ND		ug/l	0.50	1
1,1-Dichloropropene	ND		ug/l	2.0	1
Bromoform	ND		ug/l	2.0	1
1,1,2,2-Tetrachloroethane	ND		ug/l	1.0	1
Benzene	ND		ug/l	1.0	1
Toluene	ND		ug/l	1.0	1
Ethylbenzene	ND		ug/l	1.0	1
Chloromethane	ND		ug/l	2.0	1
Bromomethane	ND		ug/l	5.0	1
Vinyl chloride	ND		ug/l	1.0	1
Chloroethane	ND		ug/l	2.0	1
1,1-Dichloroethene	ND		ug/l	1.0	1
trans-1,2-Dichloroethene	ND		ug/l	1.0	1
Trichloroethene	ND		ug/l	1.0	1
1,2-Dichlorobenzene	ND		ug/l	1.0	1
1,3-Dichlorobenzene	ND		ug/l	1.0	1

Project Name:	CITY OF NEW BEDFORD	**Lab Number:**	L1005200
Project Number:	115058	**Report Date:**	04/16/10

SAMPLE RESULTS

Lab ID:	L1005200-03	Date Collected:	04/09/10 11:00
Client ID:	MW-18	Date Received:	04/09/10
Sample Location:	NBHS	Field Prep:	Not Specified

Parameter	Result	Qualifier	Units	RDL	Dilution Factor
MCP Volatile Organics - Westborough Lab					
1,4-Dichlorobenzene	ND		ug/l	1.0	1
Methyl tert butyl ether	ND		ug/l	2.0	1
p/m-Xylene	ND		ug/l	2.0	1
o-Xylene	ND		ug/l	1.0	1
cis-1,2-Dichloroethene	ND		ug/l	1.0	1
Dibromomethane	ND		ug/l	2.0	1
1,2,3-Trichloropropane	ND		ug/l	2.0	1
Styrene	ND		ug/l	1.0	1
Dichlorodifluoromethane	ND		ug/l	2.0	1
Acetone	ND		ug/l	5.0	1
Carbon disulfide	ND		ug/l	2.0	1
2-Butanone	ND		ug/l	5.0	1
4-Methyl-2-pentanone	ND		ug/l	5.0	1
2-Hexanone	ND		ug/l	5.0	1
Bromochloromethane	ND		ug/l	2.0	1
Tetrahydrofuran	ND		ug/l	10	1
2,2-Dichloropropane	ND		ug/l	2.0	1
1,2-Dibromoethane	ND		ug/l	2.0	1
1,3-Dichloropropane	ND		ug/l	2.0	1
1,1,1,2-Tetrachloroethane	ND		ug/l	1.0	1
Bromobenzene	ND		ug/l	2.0	1
n-Butylbenzene	ND		ug/l	2.0	1
sec-Butylbenzene	ND		ug/l	2.0	1
tert-Butylbenzene	ND		ug/l	2.0	1
o-Chlorotoluene	ND		ug/l	2.0	1
p-Chlorotoluene	ND		ug/l	2.0	1
1,2-Dibromo-3-chloropropane	ND		ug/l	5.0	1
Hexachlorobutadiene	ND		ug/l	0.60	1
Isopropylbenzene	ND		ug/l	2.0	1
p-Isopropyltoluene	ND		ug/l	2.0	1
Naphthalene	ND		ug/l	5.0	1
n-Propylbenzene	ND		ug/l	2.0	1
1,2,3-Trichlorobenzene	ND		ug/l	2.0	1
1,2,4-Trichlorobenzene	ND		ug/l	2.0	1
1,3,5-Trimethylbenzene	ND		ug/l	2.0	1
1,2,4-Trimethylbenzene	ND		ug/l	2.0	1
Ethyl ether	ND		ug/l	2.0	1

SAMPLE RESULTS

Lab ID:	L1005200-03	Date Collected:	04/09/10 11:00
Client ID:	MW-18	Date Received:	04/09/10
Sample Location:	NBHS	Field Prep:	Not Specified

Parameter	Result	Qualifier	Units	RDL	Dilution Factor
MCP Volatile Organics - Westborough Lab					
Isopropyl Ether	ND		ug/l	2.0	1
Ethyl-Tert-Butyl-Ether	ND		ug/l	2.0	1
Tertiary-Amyl Methyl Ether	ND		ug/l	2.0	1
1,4-Dioxane	ND		ug/l	250	1

Surrogate	% Recovery	Qualifier	Acceptance Criteria
1,2-Dichloroethane-d4	104		70-130
Toluene-d8	96		70-130
4-Bromofluorobenzene	105		70-130
Dibromofluoromethane	98		70-130

Project Name:	CITY OF NEW BEDFORD	**Lab Number:**	L1005200
Project Number:	115058	**Report Date:**	04/16/10

SAMPLE RESULTS

Lab ID:	L1005200-04	Date Collected:	04/09/10 00:00
Client ID:	TRIP BLANK	Date Received:	04/09/10
Sample Location:	NBHS	Field Prep:	Not Specified
Matrix:	Water		
Analytical Method:	60,8260B		
Analytical Date:	04/16/10 08:21		
Analyst:	MM		

Parameter	Result	Qualifier	Units	RDL	Dilution Factor
MCP Volatile Organics - Westborough Lab					
Methylene chloride	ND		ug/l	5.0	1
1,1-Dichloroethane	ND		ug/l	1.0	1
Chloroform	ND		ug/l	1.0	1
Carbon tetrachloride	ND		ug/l	1.0	1
1,2-Dichloropropane	ND		ug/l	1.0	1
Dibromochloromethane	ND		ug/l	1.0	1
1,1,2-Trichloroethane	ND		ug/l	1.0	1
Tetrachloroethene	ND		ug/l	1.0	1
Chlorobenzene	ND		ug/l	1.0	1
Trichlorofluoromethane	ND		ug/l	2.0	1
1,2-Dichloroethane	ND		ug/l	1.0	1
1,1,1-Trichloroethane	ND		ug/l	1.0	1
Bromodichloromethane	ND		ug/l	1.0	1
trans-1,3-Dichloropropene	ND		ug/l	0.50	1
cis-1,3-Dichloropropene	ND		ug/l	0.50	1
1,1-Dichloropropene	ND		ug/l	2.0	1
Bromoform	ND		ug/l	2.0	1
1,1,2,2-Tetrachloroethane	ND		ug/l	1.0	1
Benzene	ND		ug/l	1.0	1
Toluene	ND		ug/l	1.0	1
Ethylbenzene	ND		ug/l	1.0	1
Chloromethane	ND		ug/l	2.0	1
Bromomethane	ND		ug/l	5.0	1
Vinyl chloride	ND		ug/l	1.0	1
Chloroethane	ND		ug/l	2.0	1
1,1-Dichloroethene	ND		ug/l	1.0	1
trans-1,2-Dichloroethene	ND		ug/l	1.0	1
Trichloroethene	ND		ug/l	1.0	1
1,2-Dichlorobenzene	ND		ug/l	1.0	1
1,3-Dichlorobenzene	ND		ug/l	1.0	1

Project Name:	CITY OF NEW BEDFORD	**Lab Number:**	L1005200
Project Number:	115058	**Report Date:**	04/16/10

SAMPLE RESULTS

Lab ID:	L1005200-04	Date Collected:	04/09/10 00:00
Client ID:	TRIP BLANK	Date Received:	04/09/10
Sample Location:	NBHS	Field Prep:	Not Specified

Parameter	Result	Qualifier	Units	RDL	Dilution Factor
MCP Volatile Organics - Westborough Lab					
1,4-Dichlorobenzene	ND		ug/l	1.0	1
Methyl tert butyl ether	ND		ug/l	2.0	1
p/m-Xylene	ND		ug/l	2.0	1
o-Xylene	ND		ug/l	1.0	1
cis-1,2-Dichloroethene	ND		ug/l	1.0	1
Dibromomethane	ND		ug/l	2.0	1
1,2,3-Trichloropropane	ND		ug/l	2.0	1
Styrene	ND		ug/l	1.0	1
Dichlorodifluoromethane	ND		ug/l	2.0	1
Acetone	ND		ug/l	5.0	1
Carbon disulfide	ND		ug/l	2.0	1
2-Butanone	ND		ug/l	5.0	1
4-Methyl-2-pentanone	ND		ug/l	5.0	1
2-Hexanone	ND		ug/l	5.0	1
Bromochloromethane	ND		ug/l	2.0	1
Tetrahydrofuran	ND		ug/l	10	1
2,2-Dichloropropane	ND		ug/l	2.0	1
1,2-Dibromoethane	ND		ug/l	2.0	1
1,3-Dichloropropane	ND		ug/l	2.0	1
1,1,1,2-Tetrachloroethane	ND		ug/l	1.0	1
Bromobenzene	ND		ug/l	2.0	1
n-Butylbenzene	ND		ug/l	2.0	1
sec-Butylbenzene	ND		ug/l	2.0	1
tert-Butylbenzene	ND		ug/l	2.0	1
o-Chlorotoluene	ND		ug/l	2.0	1
p-Chlorotoluene	ND		ug/l	2.0	1
1,2-Dibromo-3-chloropropane	ND		ug/l	5.0	1
Hexachlorobutadiene	ND		ug/l	0.60	1
Isopropylbenzene	ND		ug/l	2.0	1
p-Isopropyltoluene	ND		ug/l	2.0	1
Naphthalene	ND		ug/l	5.0	1
n-Propylbenzene	ND		ug/l	2.0	1
1,2,3-Trichlorobenzene	ND		ug/l	2.0	1
1,2,4-Trichlorobenzene	ND		ug/l	2.0	1
1,3,5-Trimethylbenzene	ND		ug/l	2.0	1
1,2,4-Trimethylbenzene	ND		ug/l	2.0	1
Ethyl ether	ND		ug/l	2.0	1

Project Name:	CITY OF NEW BEDFORD	**Lab Number:**	L1005200
Project Number:	115058	**Report Date:**	04/16/10

SAMPLE RESULTS

Lab ID:	L1005200-04	Date Collected:	04/09/10 00:00
Client ID:	TRIP BLANK	Date Received:	04/09/10
Sample Location:	NBHS	Field Prep:	Not Specified

Parameter	Result	Qualifier	Units	RDL	Dilution Factor
MCP Volatile Organics - Westborough Lab					
Isopropyl Ether	ND		ug/l	2.0	1
Ethyl-Tert-Butyl-Ether	ND		ug/l	2.0	1
Tertiary-Amyl Methyl Ether	ND		ug/l	2.0	1
1,4-Dioxane	ND		ug/l	250	1

Surrogate	% Recovery	Qualifier	Acceptance Criteria
1,2-Dichloroethane-d4	97		70-130
Toluene-d8	98		70-130
4-Bromofluorobenzene	106		70-130
Dibromofluoromethane	92		70-130

Project Name: CITY OF NEW BEDFORD **Lab Number:** L1005200

Project Number: 115058 **Report Date:** 04/16/10

Method Blank Analysis
Batch Quality Control

Analytical Method: 60,8260B
Analytical Date: 04/15/10 12:46
Analyst: MM

Parameter	Result	Qualifier	Units	RDL
MCP Volatile Organics - Westborough Lab for sample(s): 01 Batch: WG408434-3				
Methylene chloride	ND		ug/l	5.0
1,1-Dichloroethane	ND		ug/l	1.0
Chloroform	ND		ug/l	1.0
Carbon tetrachloride	ND		ug/l	1.0
1,2-Dichloropropane	ND		ug/l	1.0
Dibromochloromethane	ND		ug/l	1.0
1,1,2-Trichloroethane	ND		ug/l	1.0
Tetrachloroethene	ND		ug/l	1.0
Chlorobenzene	ND		ug/l	1.0
Trichlorofluoromethane	ND		ug/l	2.0
1,2-Dichloroethane	ND		ug/l	1.0
1,1,1-Trichloroethane	ND		ug/l	1.0
Bromodichloromethane	ND		ug/l	1.0
trans-1,3-Dichloropropene	ND		ug/l	0.50
cis-1,3-Dichloropropene	ND		ug/l	0.50
1,1-Dichloropropene	ND		ug/l	2.0
Bromoform	ND		ug/l	2.0
1,1,2,2-Tetrachloroethane	ND		ug/l	1.0
Benzene	ND		ug/l	1.0
Toluene	ND		ug/l	1.0
Ethylbenzene	ND		ug/l	1.0
Chloromethane	ND		ug/l	2.0
Bromomethane	ND		ug/l	5.0
Vinyl chloride	ND		ug/l	1.0
Chloroethane	ND		ug/l	2.0
1,1-Dichloroethene	ND		ug/l	1.0
trans-1,2-Dichloroethene	ND		ug/l	1.0
Trichloroethene	ND		ug/l	1.0
1,2-Dichlorobenzene	ND		ug/l	1.0
1,3-Dichlorobenzene	ND		ug/l	1.0
1,4-Dichlorobenzene	ND		ug/l	1.0

Project Name: CITY OF NEW BEDFORD **Lab Number:** L1005200

Project Number: 115058 **Report Date:** 04/16/10

Method Blank Analysis
Batch Quality Control

Analytical Method: 60,8260B
Analytical Date: 04/15/10 12:46
Analyst: MM

Parameter	Result	Qualifier	Units	RDL
MCP Volatile Organics - Westborough Lab for sample(s): 01 Batch: WG408434-3				
Methyl tert butyl ether	ND		ug/l	2.0
p/m-Xylene	ND		ug/l	2.0
o-Xylene	ND		ug/l	1.0
cis-1,2-Dichloroethene	ND		ug/l	1.0
Dibromomethane	ND		ug/l	2.0
1,2,3-Trichloropropane	ND		ug/l	2.0
Styrene	ND		ug/l	1.0
Dichlorodifluoromethane	ND		ug/l	2.0
Acetone	ND		ug/l	5.0
Carbon disulfide	ND		ug/l	2.0
2-Butanone	ND		ug/l	5.0
4-Methyl-2-pentanone	ND		ug/l	5.0
2-Hexanone	ND		ug/l	5.0
Bromochloromethane	ND		ug/l	2.0
Tetrahydrofuran	ND		ug/l	10
2,2-Dichloropropane	ND		ug/l	2.0
1,2-Dibromoethane	ND		ug/l	2.0
1,3-Dichloropropane	ND		ug/l	2.0
1,1,1,2-Tetrachloroethane	ND		ug/l	1.0
Bromobenzene	ND		ug/l	2.0
n-Butylbenzene	ND		ug/l	2.0
sec-Butylbenzene	ND		ug/l	2.0
tert-Butylbenzene	ND		ug/l	2.0
o-Chlorotoluene	ND		ug/l	2.0
p-Chlorotoluene	ND		ug/l	2.0
1,2-Dibromo-3-chloropropane	ND		ug/l	5.0
Hexachlorobutadiene	ND		ug/l	0.60
Isopropylbenzene	ND		ug/l	2.0
p-Isopropyltoluene	ND		ug/l	2.0
Naphthalene	ND		ug/l	5.0
n-Propylbenzene	ND		ug/l	2.0

Project Name:	CITY OF NEW BEDFORD	**Lab Number:**	L1005200
Project Number:	115058	**Report Date:**	04/16/10

Method Blank Analysis
Batch Quality Control

Analytical Method: 60,8260B
Analytical Date: 04/15/10 12:46
Analyst: MM

Parameter	Result	Qualifier	Units	RDL
MCP Volatile Organics - Westborough Lab for sample(s): 01 Batch: WG408434-3				
1,2,3-Trichlorobenzene	ND		ug/l	2.0
1,2,4-Trichlorobenzene	ND		ug/l	2.0
1,3,5-Trimethylbenzene	ND		ug/l	2.0
1,2,4-Trimethylbenzene	ND		ug/l	2.0
Ethyl ether	ND		ug/l	2.0
Isopropyl Ether	ND		ug/l	2.0
Ethyl-Tert-Butyl-Ether	ND		ug/l	2.0
Tertiary-Amyl Methyl Ether	ND		ug/l	2.0
1,4-Dioxane	ND		ug/l	250

Surrogate	%Recovery	Qualifier	Acceptance Criteria
1,2-Dichloroethane-d4	96		70-130
Toluene-d8	100		70-130
4-Bromofluorobenzene	98		70-130
Dibromofluoromethane	98		70-130

Project Name: CITY OF NEW BEDFORD **Lab Number:** L1005200

Project Number: 115058 **Report Date:** 04/16/10

Method Blank Analysis
Batch Quality Control

Analytical Method: 60,8260B
Analytical Date: 04/16/10 07:50
Analyst: MM

Parameter	Result	Qualifier	Units	RDL
MCP Volatile Organics - Westborough Lab for sample(s): 02-04 Batch: WG408475-3				
Methylene chloride	ND		ug/l	5.0
1,1-Dichloroethane	ND		ug/l	1.0
Chloroform	ND		ug/l	1.0
Carbon tetrachloride	ND		ug/l	1.0
1,2-Dichloropropane	ND		ug/l	1.0
Dibromochloromethane	ND		ug/l	1.0
1,1,2-Trichloroethane	ND		ug/l	1.0
Tetrachloroethene	ND		ug/l	1.0
Chlorobenzene	ND		ug/l	1.0
Trichlorofluoromethane	ND		ug/l	2.0
1,2-Dichloroethane	ND		ug/l	1.0
1,1,1-Trichloroethane	ND		ug/l	1.0
Bromodichloromethane	ND		ug/l	1.0
trans-1,3-Dichloropropene	ND		ug/l	0.50
cis-1,3-Dichloropropene	ND		ug/l	0.50
1,1-Dichloropropene	ND		ug/l	2.0
Bromoform	ND		ug/l	2.0
1,1,2,2-Tetrachloroethane	ND		ug/l	1.0
Benzene	ND		ug/l	1.0
Toluene	ND		ug/l	1.0
Ethylbenzene	ND		ug/l	1.0
Chloromethane	ND		ug/l	2.0
Bromomethane	ND		ug/l	5.0
Vinyl chloride	ND		ug/l	1.0
Chloroethane	ND		ug/l	2.0
1,1-Dichloroethene	ND		ug/l	1.0
trans-1,2-Dichloroethene	ND		ug/l	1.0
Trichloroethene	ND		ug/l	1.0
1,2-Dichlorobenzene	ND		ug/l	1.0
1,3-Dichlorobenzene	ND		ug/l	1.0
1,4-Dichlorobenzene	ND		ug/l	1.0

Project Name: CITY OF NEW BEDFORD **Lab Number:** L1005200

Project Number: 115058 **Report Date:** 04/16/10

Method Blank Analysis
Batch Quality Control

Analytical Method: 60,8260B
Analytical Date: 04/16/10 07:50
Analyst: MM

Parameter	Result	Qualifier	Units	RDL
MCP Volatile Organics - Westborough Lab for sample(s): 02-04 Batch: WG408475-3				
Methyl tert butyl ether	ND		ug/l	2.0
p/m-Xylene	ND		ug/l	2.0
o-Xylene	ND		ug/l	1.0
cis-1,2-Dichloroethene	ND		ug/l	1.0
Dibromomethane	ND		ug/l	2.0
1,2,3-Trichloropropane	ND		ug/l	2.0
Styrene	ND		ug/l	1.0
Dichlorodifluoromethane	ND		ug/l	2.0
Acetone	ND		ug/l	5.0
Carbon disulfide	ND		ug/l	2.0
2-Butanone	ND		ug/l	5.0
4-Methyl-2-pentanone	ND		ug/l	5.0
2-Hexanone	ND		ug/l	5.0
Bromochloromethane	ND		ug/l	2.0
Tetrahydrofuran	ND		ug/l	10
2,2-Dichloropropane	ND		ug/l	2.0
1,2-Dibromoethane	ND		ug/l	2.0
1,3-Dichloropropane	ND		ug/l	2.0
1,1,1,2-Tetrachloroethane	ND		ug/l	1.0
Bromobenzene	ND		ug/l	2.0
n-Butylbenzene	ND		ug/l	2.0
sec-Butylbenzene	ND		ug/l	2.0
tert-Butylbenzene	ND		ug/l	2.0
o-Chlorotoluene	ND		ug/l	2.0
p-Chlorotoluene	ND		ug/l	2.0
1,2-Dibromo-3-chloropropane	ND		ug/l	5.0
Hexachlorobutadiene	ND		ug/l	0.60
Isopropylbenzene	ND		ug/l	2.0
p-Isopropyltoluene	ND		ug/l	2.0
Naphthalene	ND		ug/l	5.0
n-Propylbenzene	ND		ug/l	2.0

Project Name: CITY OF NEW BEDFORD **Lab Number:** L1005200

Project Number: 115058 **Report Date:** 04/16/10

Method Blank Analysis
Batch Quality Control

Analytical Method: 60,8260B
Analytical Date: 04/16/10 07:50
Analyst: MM

Parameter	Result	Qualifier	Units	RDL
MCP Volatile Organics - Westborough Lab for sample(s): 02-04 Batch: WG408475-3				
1,2,3-Trichlorobenzene	ND		ug/l	2.0
1,2,4-Trichlorobenzene	ND		ug/l	2.0
1,3,5-Trimethylbenzene	ND		ug/l	2.0
1,2,4-Trimethylbenzene	ND		ug/l	2.0
Ethyl ether	ND		ug/l	2.0
Isopropyl Ether	ND		ug/l	2.0
Ethyl-Tert-Butyl-Ether	ND		ug/l	2.0
Tertiary-Amyl Methyl Ether	ND		ug/l	2.0
1,4-Dioxane	ND		ug/l	250

Surrogate	%Recovery	Qualifier	Acceptance Criteria
1,2-Dichloroethane-d4	102		70-130
Toluene-d8	97		70-130
4-Bromofluorobenzene	103		70-130
Dibromofluoromethane	90		70-130

Lab Control Sample Analysis
Batch Quality Control

Project Name: CITY OF NEW BEDFORD
Project Number: 115058

Lab Number: L1005200
Report Date: 04/16/10

Parameter	LCS %Recovery	Qual	LCSD %Recovery	Qual	%Recovery Limits	RPD	Qual	RPD Limits
MCP Volatile Organics - Westborough Lab Associated sample(s): 01 Batch: WG408434-1 WG408434-2								
Methylene chloride	98		97		70-130	1		25
1,1-Dichloroethane	98		93		70-130	5		25
Chloroform	103		101		70-130	2		25
Carbon tetrachloride	108		108		70-130	0		25
1,2-Dichloropropane	93		90		70-130	3		25
Dibromochloromethane	119		109		70-130	9		25
1,1,2-Trichloroethane	101		95		70-130	6		25
Tetrachloroethene	114		112		70-130	2		25
Chlorobenzene	101		96		70-130	5		25
Trichlorofluoromethane	105		102		70-130	3		25
1,2-Dichloroethane	107		103		70-130	4		25
1,1,1-Trichloroethane	104		102		70-130	2		25
Bromodichloromethane	115		110		70-130	4		25
trans-1,3-Dichloropropene	88		86		70-130	2		25
cis-1,3-Dichloropropene	84		86		70-130	2		25
1,1-Dichloropropene	104		100		70-130	4		25
Bromoform	**134**	Q	123		70-130	9		50
1,1,2,2-Tetrachloroethane	101		97		70-130	4		25
Benzene	98		96		70-130	2		25
Toluene	99		93		70-130	6		25
Ethylbenzene	107		100		70-130	7		25

Lab Control Sample Analysis
Batch Quality Control

Project Name: CITY OF NEW BEDFORD
Project Number: 115058

Lab Number: L1005200
Report Date: 04/16/10

Parameter	LCS %Recovery	Qual	LCSD %Recovery	Qual	%Recovery Limits	RPD	Qual	RPD Limits
MCP Volatile Organics - Westborough Lab Associated sample(s): 01 Batch: WG408434-1 WG408434-2								
Chloromethane	117		100		70-130	16		50
Bromomethane	**65**	Q	**66**	Q	70-130	2		50
Vinyl chloride	83		79		70-130	5		25
Chloroethane	85		87		70-130	2		25
1,1-Dichloroethene	104		97		70-130	7		25
trans-1,2-Dichloroethene	100		100		70-130	0		25
Trichloroethene	100		98		70-130	2		25
1,2-Dichlorobenzene	110		107		70-130	3		25
1,3-Dichlorobenzene	111		107		70-130	4		25
1,4-Dichlorobenzene	111		106		70-130	5		25
Methyl tert butyl ether	87		87		70-130	0		25
p/m-Xylene	106		100		70-130	6		25
o-Xylene	108		99		70-130	9		25
cis-1,2-Dichloroethene	101		100		70-130	1		25
Dibromomethane	97		98		70-130	1		25
1,2,3-Trichloropropane	108		114		70-130	5		25
Styrene	98		92		70-130	6		25
Dichlorodifluoromethane	**45**	Q	**42**	Q	70-130	7		50
Acetone	**214**	Q	**181**	Q	70-130	17		50
Carbon disulfide	80		78		70-130	3		50
2-Butanone	106		102		70-130	4		50

Lab Control Sample Analysis
Batch Quality Control

Project Name: CITY OF NEW BEDFORD
Project Number: 115058

Lab Number: L1005200
Report Date: 04/16/10

Parameter	LCS %Recovery	Qual	LCSD %Recovery	Qual	%Recovery Limits	RPD	Qual	RPD Limits
MCP Volatile Organics - Westborough Lab Associated sample(s): 01 Batch: WG408434-1 WG408434-2								
4-Methyl-2-pentanone	110		90		70-130	20		50
2-Hexanone	108		92		70-130	16		50
Bromochloromethane	104		104		70-130	0		25
Tetrahydrofuran	113		99		70-130	13		25
2,2-Dichloropropane	77		87		70-130	12		50
1,2-Dibromoethane	97		98		70-130	1		25
1,3-Dichloropropane	99		97		70-130	2		25
1,1,1,2-Tetrachloroethane	119		108		70-130	10		25
Bromobenzene	110		110		70-130	0		25
n-Butylbenzene	110		104		70-130	6		25
sec-Butylbenzene	114		108		70-130	5		25
tert-Butylbenzene	111		107		70-130	4		25
o-Chlorotoluene	104		85		70-130	20		25
p-Chlorotoluene	92		90		70-130	2		25
1,2-Dibromo-3-chloropropane	118		95		70-130	22		50
Hexachlorobutadiene	111		125		70-130	12		25
Isopropylbenzene	112		107		70-130	5		25
p-Isopropyltoluene	115		110		70-130	4		25
Naphthalene	90		91		70-130	1		25
n-Propylbenzene	108		106		70-130	2		25
1,2,3-Trichlorobenzene	95		98		70-130	3		25

Lab Control Sample Analysis
Batch Quality Control

Project Name: CITY OF NEW BEDFORD
Project Number: 115058
Lab Number: L1005200
Report Date: 04/16/10

Parameter	LCS %Recovery	Qual	LCSD %Recovery	Qual	%Recovery Limits	RPD	Qual	RPD Limits
MCP Volatile Organics - Westborough Lab Associated sample(s): 01 Batch: WG408434-1 WG408434-2								
1,2,4-Trichlorobenzene	100		104		70-130	4		25
1,3,5-Trimethylbenzene	108		103		70-130	5		25
1,2,4-Trimethylbenzene	108		102		70-130	6		25
Ethyl ether	103		93		70-130	10		25
Isopropyl Ether	101		94		70-130	7		25
Ethyl-Tert-Butyl-Ether	88		84		70-130	5		25
Tertiary-Amyl Methyl Ether	84		81		70-130	4		25
1,4-Dioxane	114		**170**	Q	70-130	39		50

Surrogate	LCS %Recovery	Qual	LCSD %Recovery	Qual	Acceptance Criteria
1,2-Dichloroethane-d4	96		101		70-130
Toluene-d8	98		98		70-130
4-Bromofluorobenzene	88		96		70-130
Dibromofluoromethane	97		99		70-130

Lab Control Sample Analysis
Batch Quality Control

Project Name: CITY OF NEW BEDFORD
Project Number: 115058

Lab Number: L1005200
Report Date: 04/16/10

Parameter	LCS %Recovery	Qual	LCSD %Recovery	Qual	%Recovery Limits	RPD	Qual	RPD Limits
MCP Volatile Organics - Westborough Lab Associated sample(s): 02-04 Batch: WG408475-1 WG408475-2								
Methylene chloride	104		102		70-130	2		25
1,1-Dichloroethane	90		90		70-130	0		25
Chloroform	91		94		70-130	3		25
Carbon tetrachloride	86		92		70-130	7		25
1,2-Dichloropropane	90		86		70-130	5		25
Dibromochloromethane	79		84		70-130	6		25
1,1,2-Trichloroethane	95		94		70-130	1		25
Tetrachloroethene	93		93		70-130	0		25
Chlorobenzene	94		96		70-130	2		25
Trichlorofluoromethane	84		86		70-130	2		25
1,2-Dichloroethane	95		94		70-130	1		25
1,1,1-Trichloroethane	90		91		70-130	1		25
Bromodichloromethane	99		102		70-130	3		25
trans-1,3-Dichloropropene	85		90		70-130	6		25
cis-1,3-Dichloropropene	80		84		70-130	5		25
1,1-Dichloropropene	90		92		70-130	2		25
Bromoform	89		94		70-130	5		50
1,1,2,2-Tetrachloroethane	92		88		70-130	4		25
Benzene	92		93		70-130	1		25
Toluene	94		96		70-130	2		25
Ethylbenzene	100		103		70-130	3		25

Lab Control Sample Analysis
Batch Quality Control

Project Name: CITY OF NEW BEDFORD
Project Number: 115058

Lab Number: L1005200
Report Date: 04/16/10

Parameter	LCS %Recovery	Qual	LCSD %Recovery	Qual	%Recovery Limits	RPD	Qual	RPD Limits
MCP Volatile Organics - Westborough Lab Associated sample(s): 02-04 Batch: WG408475-1 WG408475-2								
Chloromethane	79		79		70-130	0		50
Bromomethane	88		85		70-130	3		50
Vinyl chloride	86		88		70-130	2		25
Chloroethane	90		91		70-130	1		25
1,1-Dichloroethene	82		88		70-130	7		25
trans-1,2-Dichloroethene	83		86		70-130	4		25
Trichloroethene	82		85		70-130	4		25
1,2-Dichlorobenzene	100		98		70-130	2		25
1,3-Dichlorobenzene	98		99		70-130	1		25
1,4-Dichlorobenzene	99		100		70-130	1		25
Methyl tert butyl ether	84		82		70-130	2		25
p/m-Xylene	105		107		70-130	2		25
o-Xylene	101		102		70-130	1		25
cis-1,2-Dichloroethene	92		91		70-130	1		25
Dibromomethane	95		92		70-130	3		25
1,2,3-Trichloropropane	99		104		70-130	5		25
Styrene	95		97		70-130	2		25
Dichlorodifluoromethane	**45**	Q	**44**	Q	70-130	2		50
Acetone	107		97		70-130	10		50
Carbon disulfide	**61**	Q	**68**	Q	70-130	11		50
2-Butanone	104		110		70-130	6		50

Lab Control Sample Analysis
Batch Quality Control

Project Name: CITY OF NEW BEDFORD
Project Number: 115058

Lab Number: L1005200
Report Date: 04/16/10

Parameter	LCS %Recovery	Qual	LCSD %Recovery	Qual	%Recovery Limits	RPD	Qual	RPD Limits
MCP Volatile Organics - Westborough Lab Associated sample(s): 02-04 Batch: WG408475-1 WG408475-2								
4-Methyl-2-pentanone	90		93		70-130	3		50
2-Hexanone	89		91		70-130	2		50
Bromochloromethane	94		95		70-130	1		25
Tetrahydrofuran	89		85		70-130	5		25
2,2-Dichloropropane	95		98		70-130	3		50
1,2-Dibromoethane	90		90		70-130	0		25
1,3-Dichloropropane	87		88		70-130	1		25
1,1,1,2-Tetrachloroethane	97		99		70-130	2		25
Bromobenzene	94		95		70-130	1		25
n-Butylbenzene	92		91		70-130	1		25
sec-Butylbenzene	100		100		70-130	0		25
tert-Butylbenzene	97		97		70-130	0		25
o-Chlorotoluene	96		98		70-130	2		25
p-Chlorotoluene	99		100		70-130	1		25
1,2-Dibromo-3-chloropropane	94		101		70-130	7		50
Hexachlorobutadiene	94		93		70-130	1		25
Isopropylbenzene	101		106		70-130	5		25
p-Isopropyltoluene	95		95		70-130	0		25
Naphthalene	73		72		70-130	1		25
n-Propylbenzene	98		100		70-130	2		25
1,2,3-Trichlorobenzene	88		86		70-130	2		25

Lab Control Sample Analysis
Batch Quality Control

Project Name: CITY OF NEW BEDFORD
Project Number: 115058

Lab Number: L1005200
Report Date: 04/16/10

Parameter	LCS %Recovery	Qual	LCSD %Recovery	Qual	%Recovery Limits	RPD	Qual	RPD Limits
MCP Volatile Organics - Westborough Lab Associated sample(s): 02-04 Batch: WG408475-1 WG408475-2								
1,2,4-Trichlorobenzene	92		91		70-130	1		25
1,3,5-Trimethylbenzene	95		95		70-130	0		25
1,2,4-Trimethylbenzene	94		93		70-130	1		25
Ethyl ether	92		82		70-130	11		25
Isopropyl Ether	91		90		70-130	1		25
Ethyl-Tert-Butyl-Ether	90		90		70-130	0		25
Tertiary-Amyl Methyl Ether	90		86		70-130	5		25
1,4-Dioxane	86		82		70-130	5		50

Surrogate	LCS %Recovery	Qual	LCSD %Recovery	Qual	Acceptance Criteria
1,2-Dichloroethane-d4	99		99		70-130
Toluene-d8	101		101		70-130
4-Bromofluorobenzene	97		98		70-130
Dibromofluoromethane	96		97		70-130

Matrix Spike Analysis
Batch Quality Control

Project Name: CITY OF NEW BEDFORD
Project Number: 115058
Lab Number: L1005200
Report Date: 04/16/10

MCP Volatile Organics - Westborough Lab Associated sample(s): 01 QC Batch ID: WG408434-4 WG408434-5 QC Sample: L1005200-01 Client ID: MW-24

Parameter	Native Sample	MS Added	MS Found	MS %Recovery	Qual	MSD Found	MSD %Recovery	Qual	Recovery Limits	RPD	Qual	RPD Limits
Methylene chloride	ND	10	9.6	96		9.7	97		70-130	1		30
1,1-Dichloroethane	ND	10	10	101		10	101		70-130	0		30
Chloroform	ND	10	11	109		11	109		70-130	0		30
Carbon tetrachloride	ND	10	13	128		12	123		70-130	4		30
1,2-Dichloropropane	ND	10	9.4	94		9.8	98		70-130	4		30
Dibromochloromethane	ND	10	12	122		13	127		70-130	4		30
1,1,2-Trichloroethane	ND	10	9.9	99		10	106		70-130	7		30
Tetrachloroethene	ND	10	12	126		12	120		70-130	5		30
Chlorobenzene	ND	10	10	105		11	107		70-130	2		30
Trichlorofluoromethane	ND	10	12	120		11	112		70-130	7		30
1,2-Dichloroethane	ND	10	10	101		11	107		70-130	6		30
1,1,1-Trichloroethane	ND	10	12	116		11	112		70-130	4		30
Bromodichloromethane	ND	10	12	119		12	125		70-130	5		30
trans-1,3-Dichloropropene	ND	10	9.0	90		9.2	92		70-130	2		30
cis-1,3-Dichloropropene	ND	10	8.1	81		8.7	87		70-130	7		30
1,1-Dichloropropene	ND	10	11	114		11	111		70-130	3		30
Bromoform	ND	10	13	**133**	Q	13	**135**	Q	70-130	1		30
1,1,2,2-Tetrachloroethane	ND	10	9.6	96		9.4	94		70-130	2		30
Benzene	ND	10	10	106		10	104		70-130	2		30
Toluene	ND	10	11	107		10	105		70-130	2		30
Ethylbenzene	ND	10	11	110		11	110		70-130	0		30

Matrix Spike Analysis
Batch Quality Control

Project Name: CITY OF NEW BEDFORD
Project Number: 115058

Lab Number: L1005200
Report Date: 04/16/10

MCP Volatile Organics - Westborough Lab Associated sample(s): 01 QC Batch ID: WG408434-4 WG408434-5 QC Sample: L1005200-01 Client ID: MW-24

Parameter	Native Sample	MS Added	MS Found	MS %Recovery	Qual	MSD Found	MSD %Recovery	Qual	Recovery Limits	RPD	Qual	RPD Limits
Chloromethane	ND	10	12	120		12	116		70-130	3		30
Bromomethane	ND	10	6.8	**68**	Q	7.0	70		70-130	3		30
Vinyl chloride	4.8	10	14	90		13	82		70-130	9		30
Chloroethane	ND	10	9.3	93		8.7	87		70-130	7		30
1,1-Dichloroethene	ND	10	11	109		11	106		70-130	3		30
trans-1,2-Dichloroethene	ND	10	11	109		11	107		70-130	2		30
Trichloroethene	ND	10	11	108		11	108		70-130	0		30
1,2-Dichlorobenzene	ND	10	10	102		10	102		70-130	0		30
1,3-Dichlorobenzene	ND	10	10	106		10	103		70-130	3		30
1,4-Dichlorobenzene	ND	10	10	103		10	102		70-130	1		30
Methyl tert butyl ether	ND	10	8.0	80		9.5	95		70-130	17		30
p/m-Xylene	ND	20	22	109		22	109		70-130	0		30
o-Xylene	ND	20	21	105		22	109		70-130	4		30
cis-1,2-Dichloroethene	1.8	10	12	107		13	108		70-130	1		30
Dibromomethane	ND	10	9.9	99		11	110		70-130	11		30
1,2,3-Trichloropropane	ND	10	11	108		10	105		70-130	3		30
Styrene	ND	20	19	97		20	100		70-130	3		30
Dichlorodifluoromethane	ND	10	3.2	**32**	Q	3.2	**32**	Q	70-130	0		30
Acetone	ND	10	16	**165**	Q	16	**163**	Q	70-130	1		30
Carbon disulfide	ND	10	8.8	88		8.9	89		70-130	1		30
2-Butanone	ND	10	8.6	86		9.6	96		70-130	11		30

Matrix Spike Analysis
Batch Quality Control

Project Name: CITY OF NEW BEDFORD
Project Number: 115058

Lab Number: L1005200
Report Date: 04/16/10

MCP Volatile Organics - Westborough Lab Associated sample(s): 01 QC Batch ID: WG408434-4 WG408434-5 QC Sample: L1005200-01 Client ID: MW-24

Parameter	Native Sample	MS Added	MS Found	MS %Recovery	Qual	MSD Found	MSD %Recovery	Qual	Recovery Limits	RPD	Qual	RPD Limits
4-Methyl-2-pentanone	ND	10	8.0	80		8.6	86		70-130	7		30
2-Hexanone	ND	10	8.3	83		9.5	95		70-130	13		30
Bromochloromethane	ND	10	10	105		11	109		70-130	4		30
Tetrahydrofuran	ND	10	ND	88		10	103		70-130	16		30
2,2-Dichloropropane	ND	10	8.5	86		8.5	85		70-130	1		30
1,2-Dibromoethane	ND	10	9.9	100		10	102		70-130	2		30
1,3-Dichloropropane	ND	10	10	101		10	105		70-130	4		30
1,1,1,2-Tetrachloroethane	ND	10	12	121		12	125		70-130	3		30
Bromobenzene	ND	10	11	110		11	111		70-130	1		30
n-Butylbenzene	ND	10	9.2	92		8.7	87		70-130	6		30
sec-Butylbenzene	ND	10	10	104		9.8	98		70-130	6		30
tert-Butylbenzene	ND	10	11	107		10	101		70-130	6		30
o-Chlorotoluene	ND	10	8.4	84		8.3	83		70-130	1		30
p-Chlorotoluene	ND	10	9.1	91		8.7	87		70-130	4		30
1,2-Dibromo-3-chloropropane	ND	10	8.4	84		12	122		70-130	**37**	Q	30
Hexachlorobutadiene	ND	10	9.6	96		9.0	90		70-130	6		30
Isopropylbenzene	ND	10	11	113		11	109		70-130	4		30
p-Isopropyltoluene	ND	10	10	104		9.8	98		70-130	6		30
Naphthalene	ND	10	6.6	**66**	Q	7.9	79		70-130	18		30
n-Propylbenzene	ND	10	11	108		10	100		70-130	8		30
1,2,3-Trichlorobenzene	ND	10	7.8	78		8.3	83		70-130	6		30

Matrix Spike Analysis
Batch Quality Control

Project Name: CITY OF NEW BEDFORD
Project Number: 115058
Lab Number: L1005200
Report Date: 04/16/10

Parameter	Native Sample	MS Added	MS Found	MS %Recovery	Qual	MSD Found	MSD %Recovery	Qual	Recovery Limits	RPD	Qual	RPD Limits
MCP Volatile Organics - Westborough Lab Associated sample(s): 01 QC Batch ID: WG408434-4 WG408434-5 QC Sample: L1005200-01 Client ID: MW-24												
1,2,4-Trichlorobenzene	ND	10	7.8	78		8.4	84		70-130	7		30
1,3,5-Trimethylbenzene	ND	10	10	102		10	100		70-130	2		30
1,2,4-Trimethylbenzene	ND	10	10	101		10	100		70-130	1		30
Ethyl ether	ND	10	9.4	94		10	105		70-130	11		30
Isopropyl Ether	ND	10	9.2	92		10	106		70-130	14		30
Ethyl-Tert-Butyl-Ether	ND	10	8.1	81		9.4	94		70-130	15		30
Tertiary-Amyl Methyl Ether	ND	10	7.6	76		8.8	88		70-130	15		30
1,4-Dioxane	ND	1000	360	**36**	Q	990	99		70-130	**93**	Q	30

Surrogate	MS % Recovery	MS Qualifier	MSD % Recovery	MSD Qualifier	Acceptance Criteria
1,2-Dichloroethane-d4	97		101		70-130
4-Bromofluorobenzene	90		90		70-130
Dibromofluoromethane	99		99		70-130
Toluene-d8	102		99		70-130

Project Name: CITY OF NEW BEDFORD
Project Number: 115058

Lab Number: L1005200
Report Date: 04/16/10

Sample Receipt and Container Information

Were project specific reporting limits specified? YES

Reagent H2O Preserved Vials Frozen on: NA

Cooler Information Custody Seal

Cooler	
A	Absent

Container Information

Container ID	Container Type	Cooler	pH	Temp deg C	Pres	Seal	Analysis
L1005200-01A	Vial HCl preserved	A	N/A	2	Y	Absent	MCP-8260-04(14)
L1005200-01B	Vial HCl preserved	A	N/A	2	Y	Absent	MCP-8260-04(14)
L1005200-01C	Vial HCl preserved	A	N/A	2	Y	Absent	MCP-8260-04(14)
L1005200-01D	Vial HCl preserved	A	N/A	2	Y	Absent	MCP-8260-04(14)
L1005200-01E	Vial HCl preserved	A	N/A	2	Y	Absent	MCP-8260-04(14)
L1005200-01F	Vial HCl preserved	A	N/A	2	Y	Absent	MCP-8260-04(14)
L1005200-02A	Vial HCl preserved	A	N/A	2	Y	Absent	MCP-8260-04(14)
L1005200-02B	Vial HCl preserved	A	N/A	2	Y	Absent	MCP-8260-04(14)
L1005200-03A	Vial HCl preserved	A	N/A	2	Y	Absent	MCP-8260-04(14)
L1005200-03B	Vial HCl preserved	A	N/A	2	Y	Absent	MCP-8260-04(14)
L1005200-04A	Vial HCl preserved	A	N/A	2	Y	Absent	MCP-8260-04(14)

*Hold days indicated by values in parentheses

GLOSSARY

Acronyms

EPA - Environmental Protection Agency.

LCS - Laboratory Control Sample: A sample matrix, free from the analytes of interest, spiked with verified known amounts of analytes or a material containing known and verified amounts of analytes.

LCSD - Laboratory Control Sample Duplicate: Refer to LCS.

MS - Matrix Spike Sample: A sample prepared by adding a known mass of target analyte to a specified amount of matrix sample for which an independent estimate of target analyte concentration is available.

MSD - Matrix Spike Sample Duplicate: Refer to MS.

NA - Not Applicable.

NC - Not Calculated: Term is utilized when one or more of the results utilized in the calculation are non-detect at the parameter's reporting unit.

NI - Not Ignitable.

RDL - Reported Detection Limit: The value at which an instrument can accurately measure an analyte at a specific concentration. The RDL includes any adjustments from dilutions, concentrations or moisture content, where applicable.

RPD - Relative Percent Difference: The results from matrix and/or matrix spike duplicates are primarily designed to assess the precision of analytical results in a given matrix and are expressed as relative percent difference (RPD). Values which are less than five times the reporting limit for any individual parameter are evaluated by utilizing the absolute difference between the values; although the RPD value will be provided in the report.

Terms

Analytical Method: Both the document from which the method originates and the analytical reference method. (Example: EPA 8260B is shown as 1,8260B.) The codes for the reference method documents are provided in the References section of the Addendum.

Data Qualifiers

A - Spectra identified as "Aldol Condensation Product".

B - The analyte was detected above the reporting limit in the associated method blank. Flag only applies to associated field samples that have detectable concentrations of the analyte at less than five times (5x) the concentration found in the blank. For DOD-related projects, flag only applies to associated field samples that have detectable concentrations of the analyte at less than ten times (10x) the concentration found in the blank AND the analyte was detected above one-half the reporting limit (or above the reporting limit for common lab contaminants) in the associated method blank.

D - Concentration of analyte was quantified from diluted analysis. Flag only applies to field samples that have detectable concentrations of the analyte.

E - Concentration of analyte exceeds the range of the calibration curve and/or linear range of the instrument.

H - The analysis of pH was performed beyond the regulatory-required holding time of 15 minutes from the time of sample collection.

P - The RPD between the results for the two columns exceeds the method-specified criteria.

Q - The quality control sample exceeds the associated acceptance criteria. Note: This flag is not applicable for matrix spike recoveries when the sample concentration is greater than 4x the spike added or for batch duplicate RPD when the sample concentrations are less than 5x the RDL. (Metals only.)

R - Analytical results are from sample re-analysis.

RE - Analytical results are from sample re-extraction.

J - Estimated value. This represents an estimated concentration for Tentatively Identified Compounds (TICs).

ND - Not detected at the reported detection limit (RDL) for the sample.

REFERENCES

60 Quality Assurance and Quality Control Requirements and Performance Standards for SW-846 Methods. MADEP BWSC. WSC-CAM-IIA (Revision 4), WSC-CAM-V C (Revision 2), WSC-CAM-IIIA (Revision 5). May 2004.

LIMITATION OF LIABILITIES

Alpha Analytical performs services with reasonable care and diligence normal to the analytical testing laboratory industry. In the event of an error, the sole and exclusive responsibility of Alpha Woods Hole Labs shall be to re-perform the work at it's own expense. In no event shall Alpha Analytical be held liable for any incidental, consequential or special damages, including but not limited to, damages in any way connected with the use of, interpretation of, information or analysis provided by Alpha Woods Hole Labs.

We strongly urge our clients to comply with EPA protocol regarding sample volume, preservation, cooling, containers, sampling procedures, holding time and splitting of samples in the field.

Certificate/Approval Program Summary

Last revised March 16, 2010 - Westboro Facility

The following list includes only those analytes/methods for which certification/approval is currently held.
For a complete listing of analytes for the referenced methods, please contact your Alpha Customer Service Representative.

Connecticut Department of Public Health Certificate/Lab ID: PH-0574. ***NELAP Accredited Solid Waste/Soil.***

Drinking Water (Inorganic Parameters: Color, pH, Turbidity, Conductivity, Alkalinity, Chloride, Free Residual Chlorine, Fluoride, Calcium Hardness, Sulfate, Nitrate, Nitrite, Aluminum, Antimony, Arsenic, Barium, Beryllium, Cadmium, Calcium, Chromium, Copper, Iron, Lead, Magnesium, Manganese, Mercury, Molybdenum, Nickel, Potassium, Selenium, Silver, Sodium, Thallium, Vanadium, Zinc, Total Dissolved Solids, Total Organic Carbon, Total Cyanide, Perchlorate. Organic Parameters: Haloacetic Acids, Volatile Organics 524.2, Total Trihalomethanes 524.2, 1,2-Dibromo-3-chloropropane (DBCP), Ethylene Dibromide (EDB).)
Wastewater/Non-Potable Water (Inorganic Parameters: Color, pH, Conductivity, Acidity, Alkalinity, Chloride, Total Residual Chlorine, Fluoride, Total Hardness, Calcium Hardness, Silica, Sulfate, Sulfide, Ammonia, Kjeldahl Nitrogen, Nitrate, Nitrite, O-Phosphate, Total Phosphorus, Aluminum, Antimony, Arsenic, Barium, Beryllium, Boron, Cadmium, Calcium, Chromium, Hexavalent Chromium, Cobalt, Copper, Iron, Lead, Magnesium, Manganese, Mercury, Molybdenum, Nickel, Potassium, Selenium, Silver, Sodium, Strontium, Thallium, Tin, Titanium, Vanadium, Zinc, Total Residue (Solids), Total Dissolved Solids, Total Suspended Solids (non-filterable), BOD, CBOD, COD, TOC, Total Cyanide, Phenolics, Foaming Agents (MBAS), Bromide, Oil and Grease. Organic Parameters: PCBs, Organochlorine Pesticides, Technical Chlordane, Toxaphene, 2,4-D, 2,4,5-T, 2,4,5-TP(Silvex), Acid Extractables (Phenols), Benzidines, Phthalate Esters, Nitrosamines, Nitroaromatics & Isophorone, Polynuclear Aromatic Hydrocarbons, Haloethers, Chlorinated Hydrocarbons, Volatile Organics, Extractable Petroleum Hydrocarbons (ETPH), MA-EPH, MA-VPH.)
Solid Waste/Soil (Inorganic Parameters: Lead in Paint, pH, Aluminum, Antimony, Arsenic, Barium, Beryllium, Boron, Cadmium, Calcium, Chromium, Hexavalent Chromium, Cobalt, Copper, Iron, Lead, Magnesium, Manganese, Mercury, Molybdenum, Nickel, Potassium, Selenium, Silver, Sodium, Thallium, Tin, Vanadium, Zinc, Total Cyanide, Ignitability, Phenolics, Corrosivity, TCLP Leach (1311), Reactivity. Organic Parameters: PCBs, Organochlorine Pesticides, Technical Chlordane, Toxaphene, Extractable Petroleum Hydrocarbons (ETPH), MA-EPH, MA-VPH, Dicamba, 2,4-D, 2,4,5-T, 2,4,5-TP(Silvex), Volatile Organics, Acid Extractables (Phenols), 3.3'-Dichlorobenzidine, Phthalates, Nitrosamines, Nitroaromatics & Cyclic Ketones, PAHs, Haloethers, Chlorinated Hydrocarbons.)

Maine Department of Human Services Certificate/Lab ID: 2009024.
Drinking Water (Inorganic Parameters: SM9215B, 9221E, 9222B, 9222D, 9223B, EPA 180.1, 300.0, 353.2, SM2130B, 2320B, 4500Cl-D, 4500CN-C, 4500CN-E, 4500F-C, 4500H+B,4500NO3-F, EPA 200.7, EPA 200.8, 245.1. Organic Parameters: 504.1, 524.2, SM 6251B.)
Wastewater/Non-Potable Water (Inorganic Parameters: EPA 120.1, 1664A, 350.1, 351.1, 353.2, 410.4, 420.1, Lachat 10-107-06-1-B, SM2320B, 2340B, 2510B, 2540C, 2540D, 426C, 4500Cl-D, 4500Cl-E, 4500CN-C, 4500CN-E, 4500F-B, 4500F-C, 4500H+B, 4500Norg-B, 4500Norg-C, 4500NH3-B, 4500NH3-G, 4500NH3-H, 4500NO3-F, 4500P-B.5, 4500P-E, 5210B, 5220D, 5310C, EPA 200.7, 200.8, 245.1. Organic Parameters: 608, 624.)

Massachusetts Department of Environmental Protection Certificate/Lab ID: M-MA086.
Drinking Water
Inorganic Parameters: (EPA 200.8 for: Sb,As,Ba,Be,Cd,Cr,Cu,Pb,Ni,Se,Tl)
(EPA 200.7 for: Ba,Be,Ca,Cd,Cr,Cu,Na,Ni) 245.1, (300.0 for: Nitrate-N, Fluoride, Sulfate)
353.2 for: Nitrate-N, Nitrite-N; SM4500NO3-F, 4500F-C, 4500CN-CE, EPA 180.1, SM2130B, SM4500Cl-D, 2320B, SM2540C, SM4500H-B.
Organic Parameters: (EPA 524.2 for: Trihalomethanes, Volatile Organics)
(504.1 for: 1,2-Dibromoethane, 1,2-Dibromo-3-Chloropropane), 314.0, 332.
Microbiology Parameters: SM9215B; ENZ. SUB. SM9223; MF-SM9222D
Non-Potable Water
Inorganic Parameters:, (EPA 200.8 for: Al,Sb,As,Be,Cd,Cr,Cu,Pb,Mn,Ni,Se,Ag,Tl,Zn)
(EPA 200.7 for: Al,Sb,As,Be,Cd,Cr,Co,Cu,Fe,Pb,Mn,Mo,Ni,Se,Ag,Sr,Ti,Tl, V,Zn,Ca,Mg,Na,K)
245.1, SM4500H,B, EPA 120.1, SM2510B, 2540C, 2540B, 2340B, 2320B, 4500CL-E, 4500F-BC, 426C, SM4500NH3-BH, (EPA 350.1 for: Ammonia-N), LACHAT 10-107-06-1-B for Ammonia-N, SM4500NO3-F, 353.2 for Nitrate-N, SM4500NH3-B,C-Titr, SM4500NH3-BC-NES, EPA 351.1, SM4500P-E, 4500P-B,E, 5220D, EPA 410.4, SM 5210B, 5310C, 4500CL-D, EPA 1664, SM14 510AC, EPA 420, SM4500-CN-CE, SM2540D.
Organic Parameters: (EPA 624 for Volatile Halocarbons, Volatile Aromatics)
(608 for: Chlordane, Aldrin, Dieldrin, DDD, DDE, DDT, Heptachlor, Heptachlor Epoxide, PCBs-Water), EPA 625 for SVOC Acid Extractables and SVOC Base/Neutral Extractables, 600/4-81-045-PCB-Oil

New Hampshire Department of Environmental Services Certificate/Lab ID: 200307. ***NELAP Accredited.***
Drinking Water (Inorganic Parameters: SM6215B, 9222B, 9223B Colilert, EPA 200.7, 200.8, 245.2, 120.1, 300.0, 314.0, SM4500CN-E, 4500H+B, 4500NO3-F, 2320B, 2510B, 2540C, 4500F-C, 5310C, 2120B, EPA 331.0. Organic Parameters: 504.1, 524.2, SM6251B.)
Non-Potable Water (Inorganic Parameters: SM9222D, 9221B, 9222B, 9221E-EC, EPA 200.7, 200.8, 245.1, 245.2, SW-846 6010B, 6020, 7196A, 7470A, SM3500-CR-D, EPA 120.1, 300.0, 350.1, 351.1, 353.2, 420.1, 1664A, SW-846 9010, 9030, 9040B, SM426C, SM2310B, 2540B, 2540D, 4500H+B, 4500NH3-H, 4500NH3-E, 4500NO2-B, 4500P-E, 4500-S2-D, 5210B, 2320B, 2540C, 4500F-C, 5310C, 5540C, LACHAT 10-117-07-1-B, LACHAT 10-107-06-1-B, LACHAT 10-107-04-1-C, LACHAT 10-107-04-1-J, LACHAT 10-117-07-1-A, SM4500CL-E, LACHAT 10-204-00-1-A, LACHAT 10-107-06-2-D. Organic Parameters: SW-846 3005A, 3015A, 3510C, 5030B, 8021B, 8260B, 8270C, 8330, EPA 624, 625, 608, SW-846 8082, 8081A.)
Solid & Chemical Materials (Inorganic Parameters: SW-846 6010B, 7196A, 7471A, 7.3.3.2, 7.3.4.2, 1010, 1030, 9010, 9012A, 9014, 9030B, 9040, 9045C, 9050C, 1311, 3005A, 3050B, 3051A. Organic Parameters: SW-846 3540C, 3545, 3580A, 5030B, 5035, 8021B, 8260B, 8270C, 8330, 8151A, 8082, 8081A.)

New Jersey Department of Environmental Protection Certificate/Lab ID: MA935. ***NELAP Accredited.***
Drinking Water (Inorganic Parameters: SM9222B, 9221E, 9223B, 9215B, 4500NO3-F, 4500F-C, EPA 300.0, 200.7, 2540C, 2320B, 314.0, SM2120B, 2510B, 5310C, SM4500H-B, EPA 200.8, 245.2. Organic Parameters: 504.1, SM6251B, 524.2.)
Non-Potable Water (Inorganic Parameters: SM5210B, EPA 410.4, SM5220D, 4500Cl-D, EPA 300.0, SM2120B, SM4500F-BC, EPA 200.7, 351.1, LACHAT 10-107-06-2-D, EPA 353.2, SM4500NO3-F, 4500NO2-B, EPA 1664A, SM5310B, C or D, 4500-PE, EPA 420.1, SM4500P-B5+E, 2540B, 2540C, 2540D, EPA 120.1, SM2510B, SM15 426C, SM9221CE, 9222D, 9221B, 9222B, 9215B, 2310B, 2320B, 4500NH3-H, 4500-S D, EPA 350.1, SM5210B, SW-846 3015, 6020, 7470A, 5540C, 4500H-B, EPA 200.8, SM3500Cr-D, EPA 245.1, 245.2, SW-846 9040B, 3005A, EPA 6010B, 7196A, SW-846 9010B, 9030B. Organic Parameters: SW-846 8260B, 8270C, 3510C, EPA 608, 624, 625, SW-846 5030B, 8021B, 8081A, 8082, 8151A, 8330, NJ OQA-QAM-025 Rev.7.)
Solid & Chemical Materials (Inorganic Parameters: SW-846 9040B, 3005A, 6010B, 7196A, 5030B, 9010B, 9030B, 1030, 1311, 3050B, 3051, 7471A, 9014, 9012A, 9045C, 9050A, 9065. Organic Parameters: SW-846 8021B, 8081A, 8082, 8151A, 8330, 8260B, 8270C, 1311, 1312, 3540C, 3545, 3550B, 3580A, 5035L, 5035H, NJ OQA-QAM-025 Rev.7.)

New York Department of Health Certificate/Lab ID: 11148. ***NELAP Accredited.***
Drinking Water (Inorganic Parameters: SM9223B, 9222B, 9215B, EPA 200.8, 200.7, 245.2, SM5310C, EPA 314.0, 332.0, SM2320B, EPA 300.0, SM2120B, 4500CN-E, 4500F-C, 4500H-B, 4500NO3-F, 2540C, EPA 120.1, SM 2510B. Organic Parameters: EPA 524.2, 504.1.)
Non-Potable Water (Inorganic Parameters: SM9221E, 9222D, 9221B, 9222B, 9215B, 5210B, EPA 410.4, SM5220D, 2310B-4a, 2320B, EPA 200.7, 300.0, LACHAT 10-117-07-1A or B, SM4500Cl-E, 4500F-C, SM15 426C, EPA 350.1, LACHAT 10-107-06-1-B, SM4500NH3-H, EPA 351.1, LACHAT 10-107-06-2, EPA 353.2, LACHAT 10-107-041-C, SM4500-NO3-F, 4500-NO2-B, 4500P-E, 2540C, 2540B, 2540D, EPA 200.8, EPA 6010B, 6020, EPA 7196A, S\M3500Cr-D, EPA 245.1, 245.2, 7470A, SM2120B, SM4500-CN-E LACHAT 10-204-00-1-A, EPA 9040B, SM4500-HB, EPA 1664A, SM5310C, EPA 420.1, SM14 510C, EPA 120.1, SM2510B, SM4500S-D, SM5540C, EPA 3005A, 3015. Organic Parameters: EPA 624, 8260B, 8270C, 625, 608, 8081A, 8151A, 8330, 8082, EPA 3510C, 5030B, 9010B, 9030B.)
Solid & Hazardous Waste (Inorganic Parameters: 1010, 1030, SW-846 Ch 7 Sec 7.3, EPA 6010B, 7196A, 7471A, 9012A, 9014, 9040B, 9045C, 9065, 9050, EPA 1311, 1312, 3005A, 3050B, 9010B, 9030B. Organic Parameters: EPA 8260B, 8270C, 8081A, 8151A, 8330, 8082, 3540C, 3545, 3546, 3580, 5030B, 5035.)

North Carolina Department of the Environment and Natural Resources Certificate/Lab ID : 666. Organic Parameters: MA-EPH, MA-VPH.

Pennsylvania Department of Environmental Protection Certificate/Lab ID : 68-03671. ***NELAP Accredited.***
Non-Potable Water (Organic Parameters: EPA 3510C, 5030B, 625, 624. 608, 8081A, 8082, 8151A, 8260B, 8270C, 8330)
Solid & Hazardous Waste (Inorganic Parameters: EPA 1010, 1030, 1311, 3050B, 3051, 6010B, EPA 7.3.3.2, EPA 7.3.4.2, 7196A, 7471A, 9010B, 9012A, 9014, 9040B, 9045C, 9050, 9065. Organic Parameters: 3540C, 3545, 3580A, 5035, 8021B, 8081A, 8082, 8151A, 8260B, 8270C, 8330)

Rhode Island Department of Health Certificate/Lab ID: LAO00065. ***NELAP Accredited via NY-DOH.***
Refer to MA-DEP Certificate for Potable and Non-Potable Water.
Refer to NY-DOH Certificate for Potable and Non-Potable Water.

Texas Commisson on Environmental Quality Certificate/Lab ID: T104704476-09-1. ***NELAP Accredited.***
Non-Potable Water (Inorganic Parameters: EPA 120.1, 1664, 200.7, 200.8, 245.1, 245.2, 300.0, 350.1, 351.1, 353.2, 376.2, 410.4, 420.1, 6010, 6020, 7196, 7470, 9040, SM 2120B, 2310B, 2320B, 2510B, 2540B, 2540C, 2540D, 426C, 4500CL-E, 4500CN-E, 4500F-C, 4500H+B, 4500NH3-H, 4500NO2B, 4500P-E, 4500 S2⁻D, 510C, 5210B, 5220D, 5310C, 5540C. Organic Parameters: EPA 608, 624, 625, 8081, 8082, 8151, 8260, 8270, 8330.)

Solid & Hazardous Waste (Inorganic Parameters: EPA 1311, 1312, 9012, 9014, 9040, 9045, 9050, 9065.)

Utah Department of Health Certificate/Lab ID: AAMA. ***NELAP Accredited.***
Non-Potable Water (Inorganic Parameters: Chloride EPA 300.0)

Department of Defense Certificate/Lab ID: L2217.
Drinking Water (Inorganic Parameters: SM 4500H-B. Organic Parameters: EPA 524.2, 504.1.)

Non-Potable Water (Inorganic Parameters: EPA 200.7, 200.8, 6010B, 6020, 245.1, 245.2, 7470A, 9040B, 300.0, 9251, 9038, 350.1, 353.2, 351.1, 314, 120.1, 9050A , 410.4, 9060, 1664, 420.1, LACHAT 10-107-06-1-B, SM 4500CN-E, 4500H-B, 4500CL-E, 4500F-BC, 4500SO4-E, 426C, 4500NH3-B, 4500NH3-H, 4500NO3-F, 4500NO2-B, 4500Norg-C, 4500PE, 2510B, 5540C, 5220D, 5310C, 2540B, 2540C, 2540D, 510C, 4500S2-AD, 3005A, 3015, 9010B, 9030B. Organic Parameters: EPA 8260B, 8270C, 8330, 625, 8082, 8151A, 8081A, 3510C, 5030B.)

Solid & Hazardous Waste (Inorganic Parameters: EPA 200.7, 6010B, 7471A, 9040B, 9045C, 9065, 420.1, 9012A, 6860, 1311, 1312, 3050B, 9030B, 3051, 9010B, 3540C, SM 510ABC, 4500CN-CE, 2540G, SW-846 7.3, Organic Parameters: EPA 8260B, 8270C, 8330, 8082, 8081A, 8151A, 3545, 3546, 3580, 5035.)

Analytes Not Accredited by NELAP
Certification is not available by NELAP for the following analytes: **EPA 8260B:** Freon-113, 1,2,4,5-Tetramethylbenzene, 4-Ethyltoluene. **EPA 8330A:** PETN, Picric Acid, Nitroglycerine, 2,6-DANT, 2,4-DANT. **EPA 8270C:** Methyl naphthalene, Dimethyl naphthalene, Total Methylnapthalenes, Total Dimethylnaphthalenes, 1,4-Diphenylhydrazine (Azobenzene). **EPA 625:** 4-Chloroaniline. **EPA 350.1** for Ammonia in a Soil matrix.

CHAIN OF CUSTODY

PAGE 1 OF

ALPHA ANALYTICAL

WESTBORO, MA TEL: 508-898-9220 FAX: 508-898-9193

MANSFIELD, MA TEL: 508-822-9300 FAX: 508-822-3288

Date Rec'd in Lab: 4/9/10

ALPHA Job #: L1005200

Client Information

Client: TRC

Address: 650 Suffolk St
Lowell MA 01720

Phone: 978-970-5600

Fax: 978-453-1995

Email: dsullivan@TRCsolutions.com

☐ These samples have been previously analyzed by Alpha

Project Information

Project Name: City of New Bedford

Project Location: NBHS

Project #: 115058

Project Manager: David Sullivan

ALPHA Quote #: 20091630

Turn-Around Time

☒ Standard 5 day ☐ RUSH (only confirmed if pre-approved!)

Date Due: 4/10/10 Time:

Report Information - Data Deliverables

☐ FAX ☒ EMAIL

☐ ADEx ☐ Add'l Deliverables

Billing Information

☐ Same as Client Info PO #: 22520

Regulatory Requirements/Report Limits

State /Fed Program	Criteria
MCP	GW1,2,3

MA MCP PRESUMPTIVE CERTAINTY --- CT REASONABLE CONFIDENCE PROTO-

☒ Yes ☐ No Are MCP Analytical Methods Required?

☐ Yes ☒ No Are CT RCP (Reasonable Confidence Protocols) Required?

Other Project Specific Requirements/Comments/Detection Limits:

ALPHA Lab ID (Lab Use Only)	Sample ID	Collection Date	Collection Time	Sample Matrix	Sampler's Initials	VOCs (8260 + TO15 List)	TO 15									Sample Specific Comments	Total # Bottles
05200 1	MW-24	4/8/10	1635	GW	AW	X					MS/MSD						6
2	MW-4	4/9/10	0900		AW	X											2
3	MW-18		1100		JG	X											2
4	Trip blank																
	~~PVP-9~~																
	~~PVP-9~~	~~4/9/10~~	~~1147~~	~~X1~~	~~AW~~	~~X~~	~~X~~									~~Soil GAS SUMMA~~	

Container Type: V SUMMA

Preservative: B

PLEASE ANSWER QUESTIONS ABOVE!

IS YOUR PROJECT MA MCP or CT RCP?

Relinquished By:	Date/Time	Received By:	Date/Time
[illegible]	4/9/10 1400	[illegible]	4/9/10 1400
[illegible]	4/9/10 1400	[illegible]	4/9/10 1815
[illegible]	4/9/10 1815	[illegible]	4/9/10 1815

Please print clearly, legibly and completely. Samples can not be logged in and turnaround time clock will not start until any ambiguities are resolved. All samples submitted are subject to Alpha's Terms and Conditions. See reverse side.

FORM NO: 01-01 (rev. 14-OCT-07)

APPENDIX B

SEALED FLOOR DRAINS

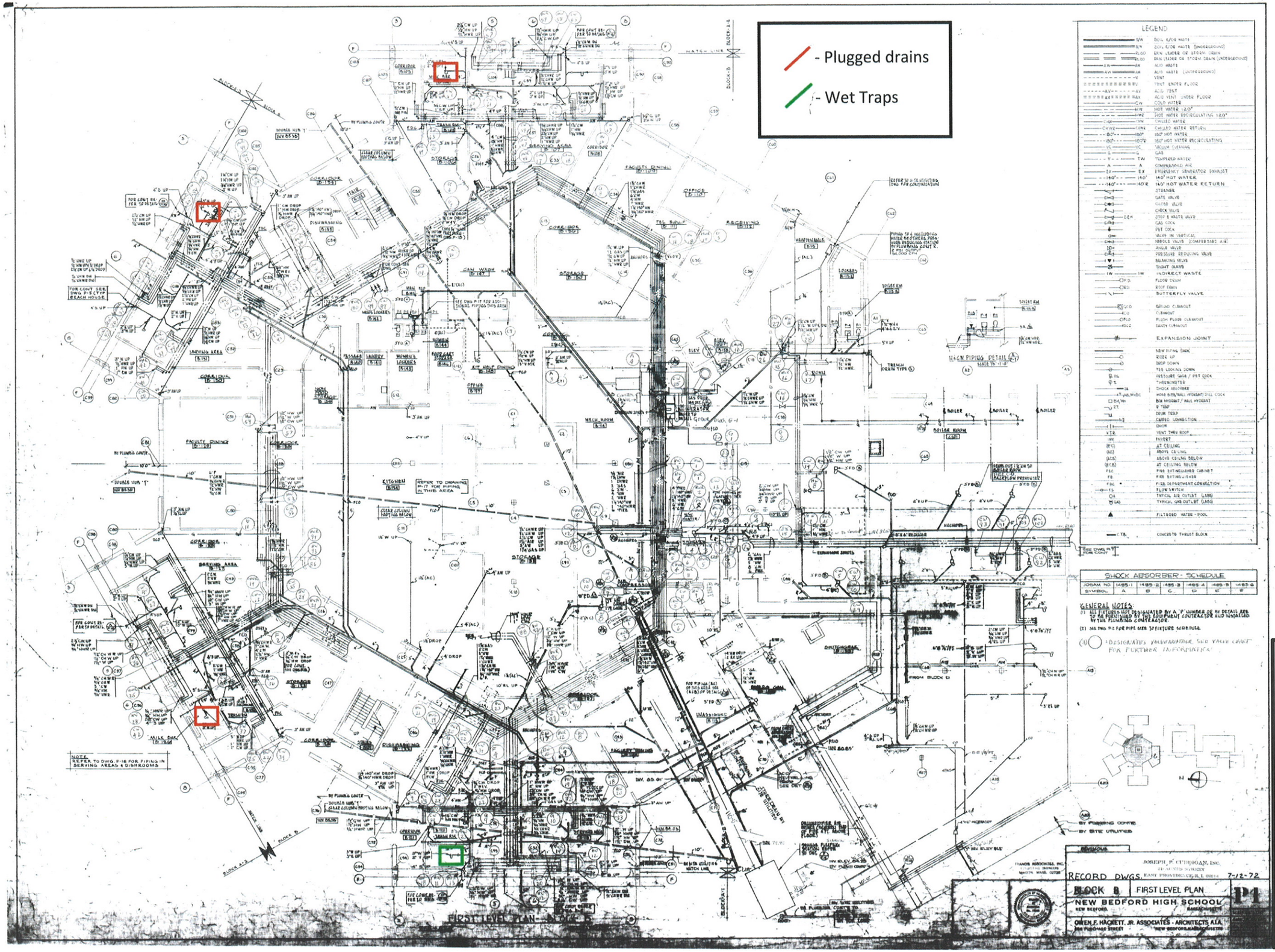

New Bedford High School
New Bedford, Massachusetts

Location of Sealed Drains

Appendix B

TRC
Wannalancit Mills
650 Suffolk Street
Lowell, MA 01854
(978) 970-5600

Date: April 28, 2010

APPENDIX C

SEALED FLOOR CRACKS

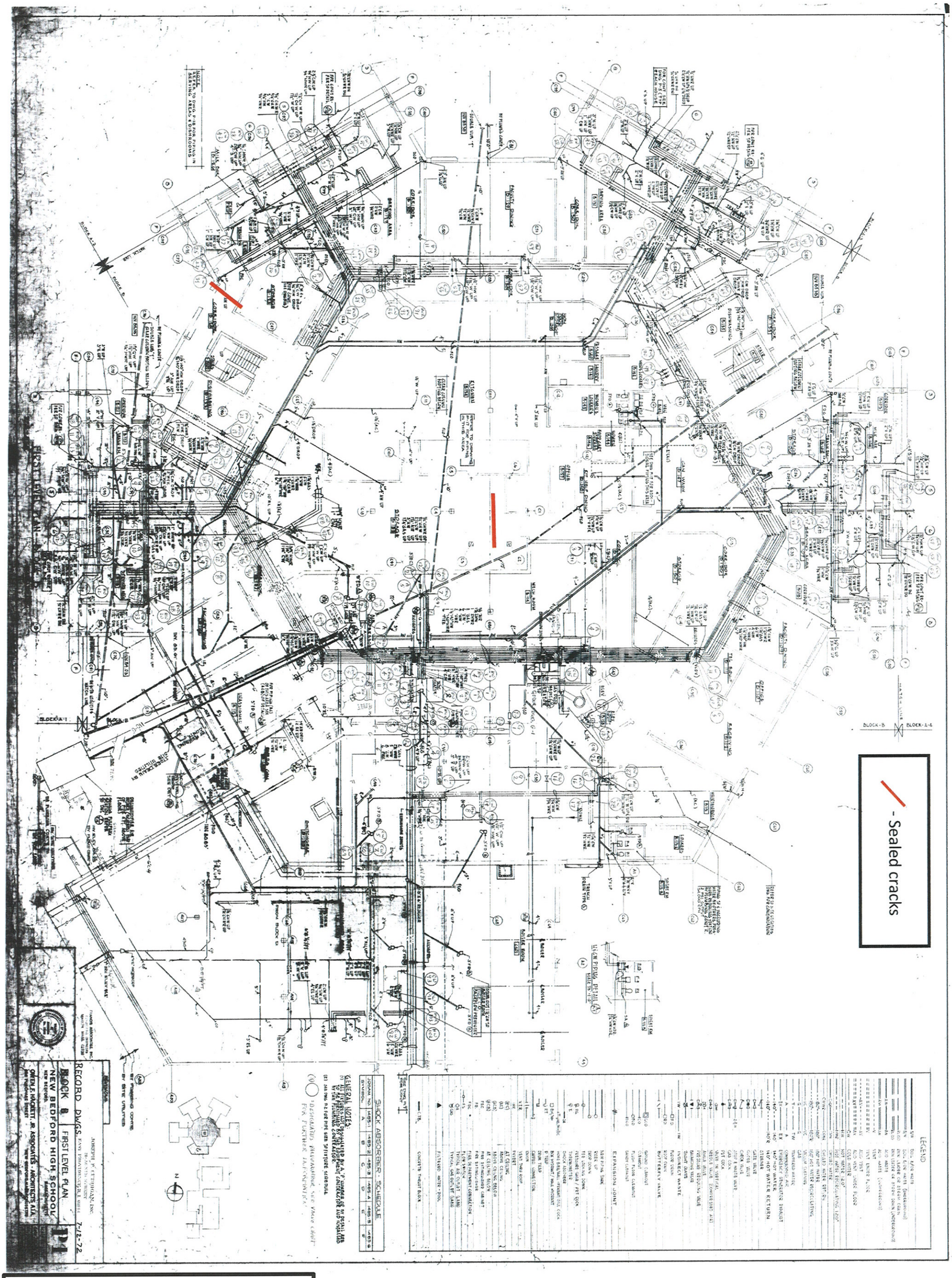

New Bedford High School
New Bedford, Massachusetts

Location of Sealed Cracks

TRC
Wannalancit Mills
650 Suffolk Street
Lowell, MA 01854
(978) 970-5600

Appendix C

Date: April 28, 2010

APPENDIX D

MECHANICAL ROOM & AUTO SHOP AREA PRODUCT INVENTORY

MECHANICAL ROOM AREA PRODUCT INVENTORY

Mechanical Room Product Inventory
New Bedford High School
February 3, 2010

Product	Synonyms/Trade Names	Recommended Use	Manafacturer	Address	Phone/ website	Volume	Comments
Palette Outside Paint Room to Left of Door							
Alkyd Industrial Gloss Enamel	Devguard 4308-9400 safety yellow		ICI Paints	925 Euclid Ave., Cleveland, OH 44115	www.devoecoatings.com	1 gal	benzene
Alkyd Traffic Marking Paint Yellow			Harenos Chemicals, Inc.	208 Dupont St., Brooklyn NY, 11222	718-389-3777	3 gal	has stoddard solvent
Bantam Duplicating Fluid			Spirit Fluid Packing Corp.	Lagrange, Il, 60525		1 gal	possibly methanol
Clear Print Duplicating Fluid		Duplicating Fluid	Mimeo Manufacturing Company	Plainview, NY 11803		1 gal	
CMAC Duplicating Fluid		Duplicating Fluid	Spectrum Corp.	Chemical Packaging Division, Selmer, TN 38375		1 gal	possibly methanol
Flat Balck Interior/Exterior Gloss Enamel	Rust Crafts		Nubrite Chem. Co., Inc.	Taunton, MA 02780		1 gal	
Interior/Exterior Waterborne Acrylic Semi-Gloss Enamel	White 4206-0100		ICI Paints	925 Euclid Ave., Cleveland, OH 44115	www.devoecoatings.com	5 gal	ethenylbenzene
Odor Eater 2		Deoderizer	Simplex Chemical Corp.	378 Page St., Stoughton, MA 02072	617-344-7111	20 gal	
Plus 5 carpet champoo	SCC7/89	Plus 5 carpet champoo	Spartan Chemical Company Inc.	110 North Westwood Ave., Toledo, OH 43607		5 gal	
Traffic and Zone Marking Paint	Flat/Oil Yellow 11-4		PPG Architectural Finish Inc.	Pittsburgh, PA 15272		1 gal	toluene
WinterBlend Plus		All purpose Cleaner	Simplex Chemical Corp.	379 Page St., Stoughton, MA 02072	617-344-7112	5 gal	
Inside Paint Room, Left Side							
Ajax		Disinfected/Detergetn	Colgate Palm Olive	Tenafly, NJ, 07670		0.25 gal	
enamel	Patio White 11202		Benjamin Moore and Company	Mountvail, NJ 07645	www.benjaminmoore.com	1 gal	xylene
Filnex		Cleaner	Simplex Chemical Corp.	379 Page St., Stoughton, MA 02072	617-344-7112	0.25 Gal	
Glisten Anti-static glass/plastic cleaner			Simplex Chemical Corp.	379 Page St., Stoughton, MA 02072	617-344-7112	0.5 gal	
Heptagon		Disinfected/Detergetn	The Butcher Company	Marlboro, MA 01752	508-481-5700	1.5 gal	32
Hi-Con 256		Disinfected/Detergetn	Misco Products Copr.	Reading, PA	800-548-4568	1 gal.	
Inspire Fresh Scent Deoderant Concentrate			The Butcher Company	Marlboro, MA 01752	508-481-5700	0.25 gal	#7
Interior Exterios Alkyd Urethane Gloss Enamel	DevShield 4328-0400		ICI Paints	925 Euclid Ave., Cleveland, OH 44115	www.devoecoatings.com	2 gal	benzene
Interior/Exterior Floor and Deck Urethane Modified Enamel Gloss-Oil	base 3-200	paint	PPG Architectural Finish Inc.	Pittsburgh, PA 15272		3 gal	xylenes
Interior/Exterior Floor and Deck Urethane Modified Enamel Gloss-Oil	Green 3-31		PPG Architectural Finish Inc.	Pittsburgh, PA 15272		1 gal	xylenes
Look Glass Cleaner Concentrate			The Butcher Company	Marlboro, MA 01752	508-481-5700	1 gal	4 .25gal contianers
Soft-Touch 3		skin cleaner	Simplex Chemical Corp.	6 Commercial Stree, Sharon, MA 02067	617-784-8484	0.25 gal	
Sundance Neutral Floor Cleaner Concentrate		Floor Cleaner	The Butcher Company	Marlboro, MA 01752	508-481-5700	1.5 gal	#4
Tru-glaze 4418-00110	Waterborne acrylic appoxy coating, white	Epoxy coating	ICI Paints	925 Euclid Ave., Cleveland, OH 44115	www.devoecoatings.com	2 gal	ethenylbenzene
Inside Paint Room, Center							
Hi-Con 256		Disinfected/Detergetn	Misco Products Copr.	Reading, PA	800-548-4568	100 gal.	
Inside Paint Room, Right side							
Alkyd Industrial Gloss Enamel	Devguard 4308-400		ICI Paints	925 Euclid Ave., Cleveland, OH 44115	www.devoecoatings.com	2 gal	benzene
Alkyd Industrial Gloss Enamel	Devguard 4308-200, pastel tint		ICI Paints	925 Euclid Ave., Cleveland, OH 44115	www.devoecoatings.com	1 gal	benzene
b54 wz 101 6401-09211	pure white	paint, voc compliant coating	Sherwin Williams	Cleveland, OH 44115		1 gal.	xylene
Devoe 4308-200		gloss enamel	ICI Paints	925 Euclid Ave., Cleveland, OH 44115	www.devoecoatings.com	2 gal	benzene
Interior/Exterior Floor and Deck Urethane Modified Enamel Gloss-Oil	base 3-200	paint	PPG Architectural Finish Inc.	Pittsburgh, PA 15272		1 gal.	xylenes
Interior/Exterior Floor and Deck Urethane Modified Enamel Gloss-Oil	base 3-200	paint	PPG Architectural Finish Inc.	Pittsburgh, PA 15272		1 gal.	xylenes
Latex Exterior Acrylic Flat	seal brown 30-0980	paint	Nubrite Chem. Co., Inc.	Taunton, MA 02780		1 gal	
Tru-glaze 4418-00110	Waterborne acrylic appoxy coating, white	Epoxy coating	ICI Paints	925 Euclid Ave., Cleveland, OH 44115	www.devoecoatings.com	2 gal	ethenylbenzene
ultra deep base b71 t-104 6403-11304		Ecoplex multimil water based epoxy	Sherwin Williams	Cleveland, OH 44115		1 gal.	xylene
ultrahide latex semi-gloss 0110 white tint base.		latex Semi gloss	ICI Paints	925 Euclid Ave., Cleveland, OH 44115	www.devoecoatings.com	1 gal.	ethenylbenzene
ultrahide latex semi-gloss 416-0110 white tint base.		latex Semi gloss	ICI Paints	925 Euclid Ave., Cleveland, OH 44115	www.devoecoatings.com	2 gal.	ethenylbenzene
wood pride solvent borne polyurethane varnish	1902-0000 clear		ICI Paints	925 Euclid Ave., Cleveland, OH 44115	www.icipaintstores.com	1 gal.	benzene
		unlabeled bucket, smells like soap, not Repco Kill III from Misty				5 gal.	
Inside Paint Room, Front Cage on Shelf							
industrial marine coatings	reducerr7 k 145 6403-6195		Sherwin Williams	Cleveland, OH 44115		3 gal.	xylene
industrial marine coatings	polyurethane hardner b60 v 2 630-4414		Sherwin Williams	Cleveland, OH 44115		1.5 gal.	xylene
rubber cement			Ross Adhesive Conros Corp	Tailor Michigan, 48180		0.25 gal	
rustoleum painter's touch flourscent paint			Rust-oleum Corp.	11 hawthorne parkway, vernon hills, Il 60061		11 oz.	toluene, xylene
unknown		lahttairete				1 gal.	
wood pride solvent borne wood finishing stain semi-transparent	1700-7520 dark walnut		ICI Paints	925 Euclid Ave., Cleveland, OH 44115	www.icideluxpaints.com	1 gal.	benzene
Inside Paint Room, Front Cage on Floor							
industrial marine coatings, epolon II multimil epoxy hardner	b62 v 800 6401-19814		Sherwin Williams	Cleveland, OH 44115		5 gal.	xylene
Outside Paint Room to Right of Door							
Desktop Cleaner			Simplex Chemical Corp.	6 Commercial Stree, Sharon, MA 02067	617-784-8484	5 gal.	
Neutral Cleaner Concentraqte			Simplex Chemical Corp.	6 Commercial Stree, Sharon, MA 02067	617-784-8484	55 gal.	
Ultra Concentrated Cleaner			Simplex Chemical Corp.	6 Commercial Stree, Sharon, MA 02067	617-784-8484	5 gal.	
WinterBlend Plus		All purpose Cleaner	Simplex Chemical Corp.	379 Page St., Stoughton, MA 02072	617-344-7112	5 gal	
Outside Paint Room to Left of Door and 1s Pallete							
Butcher's Major Max Spray Buff			The Butcher Company	Marlboro, MA 01752	508-481-5700	50 gal	multiple cases of bottles
Pallettes in Center of Room under Duct Work							
Raindance Low Foam Neutral Floor Cleaner			The Butcher Company	Marlboro, MA 01752	508-481-5700	15 gal.	multiple 1.5 gal bottles
Flammable Closet							
Fuel cans						20 gal.	four 5.gal cans
By Compressor							
KLC30		lubricatting oil	Keystone Division of Pennwalt Corp.	Philladelphia, PA 19132		5 gal.	
KLC520	Multigrade hydraulic and lubricating oil		Keystone Division of Pennwalt Corp.	Philladelphia, PA 19132		5 gal.	
KLC543	3-7-8 3920	Lubricant	Keystone Division of Pennwalt Corp.	Philladelphia, PA 19132		5 gal.	
Lower Area with Seeps							
Chemsearch 777	Chemsearch 777		Chemsearch Div. of NCH Corp.			3 gal.	
Multipe 5 gal. buckets		Open used pump oil containers					
Preium High Vacuum Pump Oil	13204	Pump Oil	Robinair, SPX Corp.	1224 Robinair Way, Owatonna, MN 55060		10 gal.	

Mechanical Room Product Inventory
New Bedford High School
February 3, 2010

Product	Synonyms/Trade Names	Recommended Use	Manafacturer	Address	Phone/ website	Volume	Comments
Back Corner of Room							
#81 Light	4/10/1977		Keystone Division of Pennwalt Corp.			5 gal.	
2K5 Medium	3-8-62 2466		Keystone Division of Pennwalt Corp.			5 gal.	
2K5 Medium	3/8/1962		Keystone Division of Pennwalt Corp.			5 gal.	
49 Light	3-4-25/ 1 2479		Keystone Division of Pennwalt Corp.	Philladelphia, PA 19132		60 gal.	
49 Light	1/1/1972		Keystone Division of Pennwalt Corp.			5 gal.	
Diamond Shine (or reused for waste?)		55 gal unknown drum					Open bung, appears old
K.L.C. NO2 3-3-616	Refr #1		Keystone Division of Pennwalt Corp.			5 gal.	
KELCO HD30	3/5/1969		Keystone Division of Pennwalt Corp.			5 gal.	
KLC-10			Keystone Division of Pennwalt Corp.			5 gal.	
KLC432	8/9/1999		Keystone Division of Pennwalt Corp.			5 gal.	
KLC5	3-2-G19		Keystone Division of Pennwalt Corp.			5 gal.	
KLC543	8/8/1976		Keystone Division of Pennwalt Corp.			5 gal.	
Molly Zeniplex II	0/6/102/2		Keystone Division of Pennwalt Corp.			5 gal.	
NP 500			Keystone Division of Pennwalt Corp.	Philladelphia, PA 19132		20 gal.	
NP 500	9/8/1995		Keystone Division of Pennwalt Corp.			5 gal.	
		55 gal unknown drum					
Kitchen							
Cling Dust Mop Treatment			Simplex Chemical Corp.	6 Commercial Stree, Sharon, MA 02067	617-784-8484	18 oz.	spray can
PowerKleen		Industrial Spray Cleaner	Simplex Chemical Corp.	6 Commercial Stree, Sharon, MA 02067	617-784-8484	1 gal.	multiple bottles
Custodial Storage							
Furniture Cream Polish			Analab	59 Davis Ave, Norwood, MA 02062	781-769-8830	10 gal.	multiple bottles
Heptagon		Disinfected/Detergetn	The Butcher Company	Marlboro, MA 01752	508-481-5700	4 gal.	multiple bottles
PowerKleen		Industrial Spray Cleaner	Simplex Chemical Corp.	6 Commercial Stree, Sharon, MA 02067	617-784-8484	10 gal.	multiple bottles
Thremo-55	Unsmoke Neutral		IIRep-Z Inc., An Unsmoke Systems Affiliate	1135 Braddock Ave., Braddock, PA 15104	800-332-6037	3 gal.	purified petroleum distilates, multiple bottles
Thremo-55	Mint		IIRep-Z Inc., An Unsmoke Systems Affiliate	1135 Braddock Ave., Braddock, PA 15104	800-332-6037	3 ga.	purified petroleum distilates, multiple bottles

PRELIMINARY ATUO SHOP AREA PRODUCT INVENTORY

PRELIMINARY MATERIALS INVENTORY AND PERSONNEL INTERVIEW
NEW BEDFORD HIGH SCHOOL AUTO SHOP
NEW BEDFORD, MASSACHUSETTS
MAY 5, 2010

The Auto Shop at New Bedford High School (NBHS) consists of an approximately 3,400 square foot area on the ground floor of the high school. The shop typically contains many projects consisting of automobiles, small machinery with 2-cycle engines, and other small internal combustion engine projects. To service these projects, the shop is equipped with several hand and power tools, a car lift, a flammable materials cabinet, an air compressor, a waste oil barrel, and a rag disposal receptacle.

On May 5, 2010, TRC conducted a preliminary inventory of chemicals used and stored in the Auto Shop and conducted an interview with the auto shop teacher, Bob Gadbois.

Preliminary Inventory of Chemical Use in the Auto Shop
Below is a preliminary inventory of materials used in the auto shop.

Preliminary Materials Inventory

Material	Manufacturer	Listed Ingredients
Liquid Wrench	Radiator Specialty Company Charlotte, NC	Petroleum distillates
Brakleen	CRC Industries Inc. Warminster, PA	Tetrachloroethylene (PCE), 127-18-4, carbon dioxide 124-38-9
Gumout	Penzoil Quaker State Company Houston, TX	Acetone, xylene, methyl ethyl ketone (MEK), petroleum distillate, propane
Battery Protector & Sealer	Permatex, Inc. Solon, OH	Petroleum distillates, ethylbenzene, xylene, acetone
Loxon Acrylic Primer-Surfacer	Acme Quality Paints Cleveland, OH	Toluene
Lacquer Thinner	W.M. Barr & Co. Inc. Memphis, TN	Petroleum distillates, methanol, toluene, acetone, MEK, propylene glycol mono methyl, ether acetate, ethyl acetate, xylene
Degreasol	Kleer-Flo Company Eden Praire, MN	Petroleum distillates
Super Agitene Parts Cleaning Fluid	Gramills Corp. Chicago, IL	Aliphatic petroleum distillates, dipropylene glycol methyl ether
Mineral Spirits	Ashland Inc. Columbus, OH	
851 Clean Cut Hand Rubbing Compound	Inmont Corp. Detroit, Mich	Petroleum distillates, free silica

Estimated quantities of other materials are as follows.
Waste Oil – 55 gallons
Antifreeze – 10 gallons
Engine Oil – 5 gallons

Hydraulic Oil – 10 gallons
Brake Fluid – 5 gallons
Propane – 4 small torch cylinders

Interview with Bob Gadbois
Mr. Gadbois has been the auto shop teacher at NBHS for 15 years, and is currently assisted by another teacher.

Mr. Gadbois stated that the current auto shop layout includes an area which was previously an auto body shop. He did not have any historical MSDS sheets available for materials used in the auto body shop or in the auto shop. Only current MSDSs are available. Mr. Gadbois also confirmed that an historical lift sump was filled in several years ago. He recalled that the sump may have leaked to the subsurface at one point, but did not provide any further details. Mr. Gadbois stated that, to his knowledge, there have not been any notable spills inside the shop, and that any minor spills of materials that have occurred were immediately cleaned up.

During the materials inventory, TRC observed several 16 oz. cans of Brakleen brake cleaner, containing PCE. Mr. Gadbois confirmed the use of this spray-on brake cleaner, which is used daily in small quantities. He estimated that approximately 12 cans of Brakleen where used during the school year. Liquid residue generated from use of the cleaner is either collected and disposed of in the sink drain inside the shop, or collected on rags and disposed of in the rag receptacle. The brake cleaner was the only material found during the inventory to list PCE as an ingredient.

TRC observed an air handling unit inside the auto shop, and also noted the existence of an exhaust blower with multiple 2" hose connections. Mr. Gadbois stated that the hallway door to the auto shop is frequently left open.

APPENDIX E

UPDATED IMMINENT HAZARD SCREENING EVALUATION

UPDATED IMMINENT HAZARD SCREENING EVALUATION
INDOOR AIR
NEW BEDFORD HIGH SCHOOL
NEW BEDFORD, MASSACHUSETTS

An Imminent Hazard Screening Evaluation was conducted in March 2010 and submitted as part of the March 22, 2010 Immediate Response Action (IRA) Plan for the New Bedford High School (NBHS) campus to determine whether data collected to evaluate the January 2010 Substantial Release Migration and Critical Exposure Pathway conditions indicated that an Imminent Hazard (IH) condition existed at the NBHS building. The March 2010 Imminent Hazard Screening Evaluation concluded that the measured indoor air concentrations are not associated with an IH condition. This is based on the indoor air sampling conducted in January 2010, The evaluation further concluded that chronic indoor air exposure is associated with a condition of No Significant Risk for workers.

As part of the continuing IRA, additional groundwater, soil gas and indoor air sampling were conducted within and in the vicinity of the NBHS building in April 2010. This Updated Imminent Hazard Screening Evaluation evaluates the supplemental data collected to determine whether the conclusions of the March 2010 Imminent Hazard Screening Evaluation continue to be accurate as stated. Presented as part of this Updated Imminent Hazard Screening Evaluation are: (1) risk and hazard calculations for the location-specific indoor air sampling data collected to date; and (2) fate and transport modeling of soil gas concentrations to estimate indoor air concentrations that may be potentially be present solely as a result of vapor intrusion, and a calculation of the risks and hazards associated with the modeled indoor air concentrations. The modeling has been performed to assist in determining the relative impacts of potential indoor and subsurface sources on indoor air quality.

Supplemental Data Collection

On April 2, 2010, TRC installed and sampled five (5) monitoring wells in the vicinity of the flagpole island surrounding monitoring well MW-7 for VOCs. Concurrently, TRC sampled several existing TRC wells for VOCs on the NBHS campus for a total of ten (10) monitoring wells sampled during the period April 7 through April 9, 2010.

Eight permanent soil gas sampling points were installed and sampled for VOCs during April to supplement previous data. With one exception, the samples were collected from locations that were sampled in February 2010. On April 9, 2010, TRC collected a soil vapor sample (PVP-6) from the permanent soil gas point in the Mechanical Room. A soil vapor sample was not previously collected for the Mechanical Room during the February 2010 sampling event due to utility obstructions. All eight permanent soil gas points, including the PVP-6 location that was sampled in early April, were sampled on April 20, 2010.

On April 20, 2010, TRC collected twelve (12) indoor air samples for analysis of VOCs. Samples were collected when the NBHS HVAC system was not in operation. The samples were collected from the following bottom floor interior locations at NBHS:

- Mechanical Room (Room B-114) – Sample designation TRC-IA-1
- Classroom (A-3-112) – Sample designation TRC-IA-5
- Classroom (A-4-115) – Sample designation TRC-IA-6
- Classroom (A-4-105) – Sample designation TRC-IA-7
- Classroom (A-3-115) – Sample designation TRC-IA-8
- Classroom (A-3-105) – Sample designation TRC-IA-9
- Classroom (A-2-115) – Sample designation TRC-IA-10
- Classroom (A-2-105) – Sample designation TRC-IA-11
- Classroom (A-1-116) – Sample designation TRC-IA-12
- Classroom (A-2-112) – Sample designation TRC-IA-13
- Classroom (A-1-110) – Sample designation TRC-IA-14
- Lecture Room (D-120) – Sample designation TRC-IA-15

Indoor Air Evaluation

In general, indoor air may be impacted by many types of potential sources, where present, including VOCs in shallow groundwater and subslab soil gas via vapor intrusion, the indoor use of VOC containing products and equipment, off-gassing from building materials and furnishings, and outdoor air quality. A determination as to whether a vapor intrusion pathway is complete and, if complete, which compounds detected in indoor air are present as a result of vapor intrusion needs to consider:

- The identity and concentration of VOCs in shallow groundwater in close proximity to the NBHS building and in soil gas beneath the slab of the NBHS building to determine those VOCs with a high likelihood of being potentially present in indoor air as a result of vapor intrusion;

- The spatial distribution of VOCs in indoor air relative to detections of VOCs in groundwater and soil gas to assist in determining whether their presence is more likely related to indoor sources than vapor intrusion;

- The concentrations of VOCs in upper floor spaces, as compared to bottom floor spaces, that are less likely to be impacted by vapor intrusion (to date, no sampling has been conducted in upper floor spaces); and

- The concentrations of volatile compounds in upwind outdoor air with the potential to impact indoor air quality (to date, no sampling has been conducted of outdoor air).

Groundwater, soil gas and indoor air sampling data collected between January and April 2010 were compared to screening threshold values consisting of: Massachusetts Contingency Plan (MCP) Method 1 GW-2 cleanup standards for groundwater, indoor air screening levels set at a Hazard Quotient (HQ) of 0.2 and excess lifetime cancer risk (ELCR) of 1E-06, and 10-times the MassDEP Indoor Air Threshold Values (IATVs) for soil gas. If a VOC in groundwater or soil gas exceeds its screening threshold value, then there may be an increased likelihood that the VOC, if also detected in indoor air, is related to a complete vapor intrusion pathway. If a VOC

was never detected in groundwater or soil gas, but was detected in indoor air, then the finding is most likely related to an indoor vapor source other than vapor intrusion.

VOCs detected in groundwater, soil gas and indoor air are presented in Figure 1 by medium (i.e., groundwater, soil gas and indoor air). Those VOCs with concentrations above groundwater, soil gas or indoor air screening threshold values are highlighted on this figure. The comprehensive list of compounds found in groundwater and soil gas includes compounds with the potential to impact indoor air via vapor intrusion. A total of 26 VOCs were detected in indoor air. Four of the compounds (methylene chloride, methyl tert butyl ether, 1,2-dichlorethane and carbon tetrachloride) have not, to date, been detected in soil gas or groundwater and appear to be present in indoor air due to a source unrelated to vapor intrusion. Because outdoor air and indoor air data from upper floor spaces have not yet been collected and the chemical inventory and interviews with staff concerning chemical usage and practices have not been completed, all VOCs detected in indoor have been quantitatively evaluated in the risk evaluation. However, as more site-specific data are gathered, VOCs such as the four compounds identified by this preliminary assessment as being unrelated to a vapor intrusion source, may be eliminated in future evaluations.

Because sampling was conducted in maintenance and storage rooms, classrooms and other academic areas of the building, current receptors include maintenance workers, students, teachers and staff. Because students are only present for approximately four years, workers (including maintenance workers, teachers and other building staff) were evaluated due to their possible lengthy tenure at the school. Workers were assumed to be exposed to VOCs in indoor air for 8 hours per day, 250 days per year for 27 years. A chronic (i.e., 27 year) exposure period has been used since it is unknown how long exposures have been occurring. Should the chronic risk estimates be associated with a condition of no significant risk, it can also be concluded that there is no IH condition associated with the exposures.

Tables 1 through 12 present the risk and hazard calculations for the current receptors exposed to the measured indoor air concentrations within each of the 12 rooms sampled in April 2010. Room sampled in January 2010 and evaluated in the March 2010 IH evaluation, but not resampled in April have not been include in this evaluation (i.e., Classroom B-116, Honors Dining Room B-106 and the Cafeteria Storage Room). For rooms that were sampled in both January and April, the maximum detected concentration across both rounds of sampling has been used to evaluate risk and hazard. The indoor air concentrations are shown on Tables 1 through 12, as well as the toxicity values used to estimate the Excess Lifetime Cancer Risk (ELCR) and Hazard Index (HI). Toxicity values (unit risks and reference concentrations) are the same as those used by the Massachusetts Department of Environmental Protection (MassDEP) in the development of the MCP Method 1 cleanup standards except for 1,3,5-trimethylbenzene, 1,2,4-trimethylbenzene, chloromethane, dichlorodifluoromethane, n-propylbenzene, and trichlorofluoromethane. For these five compounds, none of which are classified as Class A, B or C carcinogens, a reference concentration provided by EPA's Integrated Risk Information System was used for chloromethane, reference concentrations provided on EPA's Health Effects Assessment Summary Tables were used for dichlorodifluoromethane and trichlorofluoromethane, provisional reference concentrations provided by EPA's Superfund

Technical Support Center was used for 1,2,4-trimethylbenzene and n-propylbenzene, and the MassDEP RfC for C9-C10 aromatics was used for 1,3,5-trimethylbenzene.

The calculations indicated that risks and hazards are less than the MCP Risk Limits of an excess lifetime cancer risk (ELCR) of 1E-05 and a hazard index (HI) of 1 for all twelve rooms evaluated. In addition, it can be further concluded that chronic indoor air exposure is associated with a condition of No Significant Risk for workers.

Fate and Transport Modeling

In addition to the quantitative evaluation of measured indoor air concentrations, a modeling exercise for soil gas migration was performed to predict the concentrations of VOC that may be present in indoor air based solely on the vapor intrusion pathway. This exercise was designed to determine whether the predicted indoor air concentrations are less than the measured air concentrations, indicating that VOC sources unrelated to vapor intrusion are responsible for a portion of the measured indoor air concentrations. The academic rooms with the highest relative risk and hazard based in the indoor air sampling data (Classroom A-3-112 and the Lecture Room) were selected as the locations for the fate and transport modeling. For Classroom A-3-112, the most proximate soil gas sampling point was PVP-3/TPV-4. Soil gas data from location PVP-8/TVP-11 was used for the Lecture Room. The maximum detected soil gas concentration across the February and April sampling rounds was used for the fate and transport modeling.

MassDEP's MCP GW-2 alpha spreadsheet was used for the evaluation, modified to accept a soil gas concentrations rather than a groundwater concentration. Site-specific information used in the modeling is as follows:

Model Parameter	Classroom A-3-112	Lecture Room
Construction Type	Slab-on-grade	Slab-on-grade
Slab thickness	4.75 inches	4.25 inches
Depth of sampling below slab	0.75 inches	0.75 inches
Room Length	30 feet	21.8 feet
Room Width	30 feet	28.2 feet
Ceiling Height	8.8 feet	8.8 feet
Soil Type	Sand	Sand
Air Exchange Rate	0.45/hour	2/hour

All other model parameters, including compound-specific chemical parameters (e.g., Henry's Law Constants) were the same as those used by MassDEP in the development of the MCP GW-2 cleanup standards. The model inputs and outputs are presented in Tables 13 and 14 for Classroom A-3-112 and the Lecture Room, respectively.

The modeled indoor air concentrations, presented on Tables 13 and 14, were used to calculate room-specific risk and hazard using the same exposure and toxicity assumptions as previously described for the indoor air evaluation. Tables 15 and 16 provide the risk and hazard calculations for the modeled indoor air concentrations for Classroom A-3-112 and the Lecture Room, respectively.

The calculations, based on the modeled indoor air concentrations, indicated that risks and hazards are less than the MCP Risk Limits of an excess lifetime cancer risk (ELCR) of 1E-05 and a hazard index (HI) of 1 for both rooms evaluated. For Classroom A-3-112, the ELCR was 7E-09 and the HI was 0.0002. For the Lecture Room (D-120), the ELCR was 2E-08 and the HI was 0.0008. Therefore, it can be concluded that, based on the fate and transport modeling, only a small fraction of the measured indoor air concentrations are associated with a complete vapor intrusion pathway and the majority of the calculated risk and hazard for the measured indoor air concentrations are likely associated with non-vapor intrusion sources.

Table 1
Commercial Worker
Inhalation of Indoor Air Exposure Pathway
New Bedford High School - Mechanical Room B-114
New Bedford, Massachusetts

		EPC	Estimated Dose		Toxicity Values		Risk Estimates	
	Constituent	Indoor Air Concentration µg/m3	ADIcancer (Cancer) µg/m3	ADInon-cancer (Non-cancer) µg/m3	Unit Risk per µg/m3	Chronic Noncancer Reference Concentration µg/m3	Cancer Risk (--)	Hazard Quotient (--)
78-93-3	2-Butanone	4.57E+00	4.1E-01	1.1E+00	NA	5.0E+03	NA	2.E-04
67-64-1	Acetone	3.40E+00	3.0E-01	7.8E-01	NA	8.0E+02	NA	1.E-03
71-43-2	Benzene	5.50E+00	4.9E-01	1.3E+00	7.8E-06	3.0E+01	4.E-06	4.E-02
56-23-5	Carbon tetrachloride	5.78E-01	5.1E-02	1.3E-01	1.5E-05	4.3E+02	8.E-07	3.E-04
74-87-3	Chloromethane	1.11E+00	9.9E-02	2.6E-01	NA	9.0E+01	NA	3.E-03
67-66-3	Chloroform	1.61E-01	1.4E-02	3.7E-02	2.3E-05	6.6E+02	3.E-07	6.E-05
156-59-2	cis-1,2-Dichloroethene	1.52E+01	1.3E+00	3.5E+00	NA	3.5E+01	NA	1.E-01
107-06-2	1,2-Dichloroethane	1.09E-01	9.7E-03	2.5E-02	2.6E-05	5.5E+01	3.E-07	5.E-04
75-71-8	Dichlorodifluoromethane	2.27E+00	2.0E-01	5.2E-01	NA	2.0E+02	NA	3.E-03
108-88-3	Toluene	4.20E+01	3.7E+00	9.7E+00	NA	5.0E+03	NA	2.E-03
156-60-5	trans-1,2-Dichloroethene	5.62E+00	5.0E-01	1.3E+00	NA	7.0E+01	NA	2.E-02
79-01-6	Trichloroethene	1.09E+01	9.7E-01	2.5E+00	1.7E-06	1.8E+02	2.E-06	1.E-02
75-69-4	Trichlorofluoromethane	1.25E+00	1.1E-01	2.9E-01	NA	7.0E+02	NA	4.E-04
100-41-4	Ethylbenzene	5.99E+00	5.3E-01	1.4E+00	NA	1.0E+03	NA	1.E-03
91-20-3	Naphthalene	6.81E-01	6.0E-02	1.6E-01	NA	3.0E+00	NA	5.E-02
1330-20-7	Xylenes	3.19E+01	2.8E+00	7.3E+00	NA	1.0E+02	NA	7.E-02
95-63-6	1,2,4,-Trimethylbenzene	9.04E+00	8.0E-01	2.1E+00	NA	7.0E+00	NA	3.E-01
108-67-8	1,3,5-Trimethylbenzene	2.54E+00	2.3E-01	5.8E-01	NA	5.0E+01	NA	1.E-02
103-65-1	n-Propylbenzene	1.49E+00	1.3E-01	3.4E-01	NA	1.0E+03	NA	3.E-04
75-01-4	Vinyl chloride	8.53E-01	7.6E-02	2.0E-01	8.8E-06	1.0E+02	7.E-07	2.E-03

RfC for C9-C10 aromatics used for 1,3,5-trimethylbenzene
Not detected in groundwater or soil gas
Where:

	Cancer Risk	Hazard Index
TOTAL:	7E-06	6E-01

Bold = Cancer Risk >1.0E-05 or Hazard Quotient > 1.0E+01

LADIcancer = IAC x EF x ED x EP/APcancer
ADInon-cancer = IAC x EF x ED x EP / APnon-cancer
Cancer Risk = LADIcancer x UR
Hazard Quotient = ADInon-cancer / Inhalation Reference Concentration

LADI = Life Time Average Daily Exposure
ADI = Average Daily Exposure
EPC = Exposure Point Concentration
$\mu g/m^3$ = micrograms per cubic meter

And where:

Exposure Frequency (EF) =	250	days/year (5 days a week for 26 weeks of exposure)
Exposure Duration (ED) =	8	hrs/day [1]
Exposure Period (EP) =	27	yr [1]
Unit Conversion (UC) =	0.042	days/hr
Averaging Period (APcancer) =	25550	days [1]
Averaging Period (APnon-cancer) =	9855	days [1]

[1] MADEP, 2006

Table 2
Commercial Worker
Inhalation of Indoor Air Exposure Pathway
New Bedford High School - Classroom A-3-112
New Bedford, Massachusetts

		EPC	Estimated Dose		Toxicity Values		Risk Estimates	
	Constituent	Indoor Air Concentration µg/m3	ADEcancer (Cancer) µg/m3	ADEnon-cancer (Non-cancer) µg/m3	Unit Risk per µg/m3	Chronic Noncancer Reference Concentration µg/m3	Cancer Risk (--)	Hazard Quotient (--)
95-63-6	1,2,4,-Trimethylbenzene	3.18E+00	2.8E-01	7.3E-01	NA	7.0E+00	NA	1.E-01
78-93-3	2-Butanone	1.89E+00	1.7E-01	4.3E-01	NA	5.0E+03	NA	9.E-05
91-20-3	Naphthalene	3.25E-01	2.9E-02	7.5E-02	NA	3.0E+00	NA	2.E-02
71-43-2	Benzene	2.55E+00	2.3E-01	5.9E-01	7.8E-06	3.0E+01	2.E-06	2.E-02
74-87-3	Chloromethane	1.29E+00	1.1E-01	3.0E-01	NA	9.0E+01	NA	3.E-03
67-66-3	Chloroform	2.83E+00	2.5E-01	6.5E-01	2.3E-05	6.6E+02	6.E-06	1.E-03
56-23-5	Carbon Tetrachloride	5.59E-01	5.0E-02	1.3E-01	1.5E-05	4.3E+02	7.E-07	3.E-04
156-59-2	cis-1,2-Dichloroethene	3.58E+00	3.2E-01	8.2E-01	NA	3.5E+01	NA	2.E-02
75-71-8	Dichlorodifluoromethane	3.36E+00	3.0E-01	7.7E-01	NA	2.0E+02	NA	4.E-03
100-41-4	Ethylbenzene	1.80E+00	1.6E-01	4.1E-01	NA	1.0E+03	NA	4.E-04
108-10-1	4-Methyl-2-pentanone	1.21E+00	1.1E-01	2.8E-01	NA	3.0E+03	NA	9.E-05
1330-20-7	Xylenes	9.99E+00	8.9E-01	2.3E+00	NA	1.0E+02	NA	2.E-02
108-88-3	Toluene	1.31E+01	1.2E+00	3.0E+00	NA	5.0E+03	NA	6.E-04
156-60-5	trans-1,2-Dichloroethene	1.72E+00	1.5E-01	4.0E-01	NA	7.0E+01	NA	6.E-03
79-01-6	Trichloroethene	1.12E+00	9.9E-02	2.6E-01	1.7E-06	1.8E+02	2.E-07	1.E-03
75-69-4	Trichlorofluoromethane	4.92E+00	4.4E-01	1.1E+00	NA	7.0E+02	NA	2.E-03
75-01-4	Vinyl chloride	5.31E-01	4.7E-02	1.2E-01	8.8E-06	1.0E+02	4.E-07	1.E-03

Not detected in groundwater or soil gas

	Cancer Risk	Hazard Index
TOTAL	9E-06	2E-01

Where:

LADEcancer = IAC x EFx ED x EP/APcancer
ADEnon-cancer = IAC x EF x ED x EP / APnon-cancer
Cancer Risk = LADEcancer x UR
Hazard Quotient = ADEnon-cancer / Inhalation Reference Concentration

Bold = Cancer Risk > 1.0E-05 or Hazard Quotient > 1.0E+01

LADE = Life Time Average Daily Exposure
ADE = Average Daily Exposure
EPC = Exposure Point Concentration
$\mu g/m^3$ = micrograms per cubic meter

And where:

Exposure Frequency (EF) =	250	days/year (5 days a week for 26 weeks of exposure)
Exposure Duration (ED) =	8	hrs/day [1]
Exposure Period (EP) =	27	yr [1]
Unit Conversion (UC) =	0.042	days/hr
Averaging Period (APcancer) =	25550	days [1]
Averaging Period (APnon-cancer) =	9855	days [1]

[1] MADEP, 2006

Table 3
Commercial Worker
Inhalation of Indoor Air Exposure Pathway
New Bedford High School - Classroom A-4-115
New Bedford, Massachusetts

		EPC	Estimated Dose		Toxicity Values		Risk Estimates	
	Constituent	Indoor Air Concentration µg/m3	ADIcancer (Cancer) µg/m3	ADInon-cancer (Non-cancer) µg/m3	Unit Risk per µg/m3	Chronic Noncancer Reference Concentration µg/m3	Cancer Risk (--)	Hazard Quotient (--)
67-64-1	Acetone	6.81E+00	6.0E-01	1.6E+00	NA	8.0E+02	NA	2.E-03
74-87-3	Chloromethane	1.54E+00	1.4E-01	3.5E-01	NA	9.0E+01	NA	4.E-03
156-59-2	cis-1,2-Dichloroethene	1.03E-01	9.1E-03	2.4E-02	NA	3.5E+01	NA	7.E-04
71-43-2	Benzene	4.05E-01	3.6E-02	9.3E-02	7.8E-06	3.0E+01	3.E-07	3.E-03
56-23-5	Carbon tetrachloride	6.29E-01	5.6E-02	1.4E-01	1.5E-05	4.3E+02	8.E-07	3.E-04
75-71-8	Dichlorodifluoromethane	3.09E+00	2.7E-01	7.1E-01	NA	2.0E+02	NA	4.E-03
108-88-3	Toluene	8.74E-01	7.8E-02	2.0E-01	NA	5.0E+03	NA	4.E-05
79-01-6	Trichloroethene	1.72E-01	1.5E-02	4.0E-02	1.7E-06	1.8E+02	3.E-08	2.E-04
75-69-4	Trichlorofluoromethane	1.57E+00	1.4E-01	3.6E-01	NA	7.0E+02	NA	5.E-04

Not detected in groundwater or soil gas

	Cancer Risk	Hazard Index
TOTAL:	1E-06	1E-02

Bold = Cancer Risk >1.0E-05 or Hazard Quotient > 1.0E+01

Where:

LADIcancer = IAC x EFx ED x EP/APcancer
ADInon-cancer = IAC x EF x ED x EP / APnon-cancer
Cancer Risk = LADIcancer x UR
Hazard Quotient = ADInon-cancer / Inhalation Reference Concentration

LADI = Life Time Average Daily Exposure
ADI = Average Daily Exposure
EPC = Exposure Point Concentration
$\mu g/m^3$ = micrograms per cubic meter

And where:

Exposure Frequency (EF) =	250	days/year (5 days a week for 26 weeks of exposure)
Exposure Duration (ED) =	8	hrs/day [1]
Exposure Period (EP) =	27	yr [1]
Unit Conversion (UC) =	0.042	days/hr
Averaging Period (APcancer) =	25550	days [1]
Averaging Period (APnon-cancer) =	9855	days [1]

[1] MADEP, 2006

Table 4
Commercial Worker
Inhalation of Indoor Air Exposure Pathway
New Bedford High School - Classroom A-4-105
New Bedford, Massachusetts

		EPC	Estimated Dose		Toxicity Values		Risk Estimates	
	Constituent	Indoor Air Concentration µg/m3	ADEcancer (Cancer) µg/m3	ADEnon-cancer (Non-cancer) µg/m3	Unit Risk per µg/m3	Chronic Noncancer Reference Concentration µg/m3	Cancer Risk (--)	Hazard Quotient (--)
67-64-1	Acetone	5.18E+00	4.6E-01	1.2E+00	NA	8.0E+02	NA	1.E-03
74-87-3	Chloromethane	1.11E+00	9.9E-02	2.6E-01	NA	9.0E+01	NA	3.E-03
156-59-2	cis-1,2-Dichloroethene	2.46E-01	2.2E-02	5.7E-02	NA	3.5E+01	NA	2.E-03
56-23-5	Carbon tetrachloride	4.78E-01	4.2E-02	1.1E-01	1.5E-05	4.3E+02	6.E-07	3.E-04
75-71-8	Dichlorodifluoromethane	2.16E+00	1.9E-01	5.0E-01	NA	2.0E+02	NA	2.E-03
108-88-3	Toluene	1.41E+00	1.3E-01	3.2E-01	NA	5.0E+03	NA	6.E-05
79-01-6	Trichloroethene	4.62E-01	4.1E-02	1.1E-01	1.7E-06	1.8E+02	7.E-08	6.E-04

Not detected in groundwater or soil gas

	Cancer Risk	Hazard Index
TOTAL:	7E-07	9E-03

Bold = Cancer Risk > 1.0E-05 or Hazard Quotient > 1.0E+01

Where:

LADEcancer = IAC x EFx ED x EP/APcancer
ADEnon-cancer = IAC x EF x ED x EP / APnon-cancer
Cancer Risk = LADEcancer x UR
Hazard Quotient = ADEnon-cancer / Inhalation Reference Concentration

LADE = Life Time Average Daily Exposure
ADE = Average Daily Exposure
EPC = Exposure Point Concentration
$\mu g/m^3$ = micrograms per cubic meter

And where:

Exposure Frequency (EF) =	250	days/year (5 days a week for 26 weeks of exposure)
Exposure Duration (ED) =	8	hrs/day [1]
Exposure Period (EP) =	27	yr [1]
Unit Conversion (UC) =	0.042	days/hr
Averaging Period (APcancer) =	25550	days [1]
Averaging Period (APnon-cancer) =	9855	days [1]

[1] MADEP, 2006

Table 5
Commercial Worker
Inhalation of Indoor Air Exposure Pathway
New Bedford High School - Classroom A-3-115
New Bedford, Massachusetts

		EPC	Estimated Dose		Toxicity Values		Risk Estimates	
	Constituent	Indoor Air Concentration µg/m3	ADIcancer (Cancer) µg/m3	ADInon-cancer (Non-cancer) µg/m3	Unit Risk per µg/m3	Chronic Noncancer Reference Concentration µg/m3	Cancer Risk (--)	Hazard Quotient (--)
67-64-1	Acetone	7.56E+00	6.7E-01	1.7E+00	NA	8.0E+02	NA	2.E-03
74-87-3	Chloromethane	1.09E+00	9.7E-02	2.5E-01	NA	9.0E+01	NA	3.E-03
56-23-5	Carbon tetrachloride	4.84E-01	4.3E-02	1.1E-01	1.5E-05	4.3E+02	6.E-07	3.E-04
78-93-3	2-Butanone	9.22E-01	8.2E-02	2.1E-01	NA	5.0E+03	NA	4.E-05
75-71-8	Dichlorodifluoromethane	2.31E+00	2.1E-01	5.3E-01	NA	2.0E+02	NA	3.E-03
75-69-4	Trichlorofluoromethane	1.25E+00	1.1E-01	2.9E-01	NA	7.0E+02	NA	4.E-04

Not detected in groundwater or soil gas

	Cancer Risk	Hazard Index
TOTAL:	6E-07	8E-03

Bold = Cancer Risk > 1.0E-05 or Hazard Quotient > 1.0E+01

Where:

LADIcancer = IAC x EF x ED x EP/APcancer
ADInon-cancer = IAC x EF x ED x EP / APnon-cancer
Cancer Risk = LADIcancer x UR
Hazard Quotient = ADInon-cancer / Inhalation Reference Concentration

LADI = Life Time Average Daily Exposure
ADI = Average Daily Exposure
EPC = Exposure Point Concentration
$\mu g/m^3$ = micrograms per cubic meter

And where:

Exposure Frequency (EF) =	250	days/year (5 days a week for 26 weeks of exposure)
Exposure Duration (ED) =	8	hrs/day [1]
Exposure Period (EP) =	27	yr [1]
Unit Conversion (UC) =	0.042	days/hr
Averaging Period (APcancer) =	25550	days [1]
Averaging Period (APnon-cancer) =	9855	days [1]

[1] MADEP, 2006

Table 6
Commercial Worker
Inhalation of Indoor Air Exposure Pathway
New Bedford High School - Classroom A-3-105
New Bedford, Massachusetts

		EPC	Estimated Dose		Toxicity Values		Risk Estimates	
	Constituent	Indoor Air Concentration µg/m3	ADEcancer (Cancer) µg/m3	ADEnon-cancer (Non-cancer) µg/m3	Unit Risk per µg/m3	Chronic Noncancer Reference Concentration µg/m3	Cancer Risk (--)	Hazard Quotient (--)
67-64-1	Acetone	5.78E+00	5.1E-01	1.3E+00	NA	8.0E+02	NA	2.E-03
74-87-3	Chloromethane	1.08E+00	9.6E-02	2.5E-01	NA	9.0E+01	NA	3.E-03
156-59-2	cis-1,2-Dichloroethene	1.19E-01	1.1E-02	2.7E-02	NA	3.5E+01	NA	8.E-04
71-43-2	Benzene	3.54E-01	3.1E-02	8.1E-02	7.8E-06	3.0E+01	2.E-07	3.E-03
56-23-5	Carbon tetrachloride	5.41E-01	4.8E-02	1.2E-01	1.5E-05	4.3E+02	7.E-07	3.E-04
75-71-8	Dichlorodifluoromethane	1.95E+00	1.7E-01	4.5E-01	NA	2.0E+02	NA	2.E-03
108-88-3	Toluene	9.15E-01	8.1E-02	2.1E-01	NA	5.0E+03	NA	4.E-05
127-18-4	Tetrachloroethene	1.96E-01	1.7E-02	4.5E-02	1.0E-05	4.6E+03	2.E-07	1.E-05
75-09-2	Methylene chloride	2.87E+00	2.5E-01	6.6E-01	4.7E-07	3.0E+03	1.E-07	2.E-04

Not detected in groundwater or soil gas

	Cancer Risk	Hazard Index
TOTAL:	1E-06	1E-02

Bold = Cancer Risk >1.0E-05 or Hazard Quotient > 1.0E+01

Where:

LADEcancer = IAC x EFx ED x EP/APcancer
ADEnon-cancer = IAC x EF x ED x EP / APnon-cancer
Cancer Risk = LADEcancer x UR
Hazard Quotient = ADEnon-cancer / Inhalation Reference Concentration

LADE = Life Time Average Daily Exposure
ADE = Average Daily Exposure
EPC = Exposure Point Concentration
$\mu g/m^3$ = micrograms per cubic meter

And where:

Exposure Frequency (EF) =	250	days/year (5 days a week for 26 weeks of exposure)
Exposure Duration (ED) =	8	hrs/day [1]
Exposure Period (EP) =	27	yr [1]
Unit Conversion (UC) =	0.042	days/hr
Averaging Period (APcancer) =	25550	days [1]
Averaging Period (APnon-cancer) =	9855	days [1]

[1] MADEP, 2006

Table 7
Commercial Worker
Inhalation of Indoor Air Exposure Pathway
New Bedford High School - Classroom A-2-115
New Bedford, Massachusetts

		EPC	Estimated Dose		Toxicity Values		Risk Estimates	
	Constituent	Indoor Air Concentration µg/m3	ADIcancer (Cancer) µg/m3	ADInon-cancer (Non-cancer) µg/m3	Unit Risk per µg/m3	Chronic Noncancer Reference Concentration µg/m3	Cancer Risk (--)	Hazard Quotient (--)
67-64-1	Acetone	4.64E+00	4.1E-01	1.1E+00	NA	8.0E+02	NA	1.E-03
74-87-3	Chloromethane	1.19E+00	1.1E-01	2.7E-01	NA	9.0E+01	NA	3.E-03
56-23-5	Carbon tetrachloride	4.90E-01	4.3E-02	1.1E-01	1.5E-05	4.3E+02	7.E-07	3.E-04
75-71-8	Dichlorodifluoromethane	2.21E+00	2.0E-01	5.1E-01	NA	2.0E+02	NA	3.E-03
75-69-4	Trichlorofluoromethane	1.20E+00	1.1E-01	2.8E-01	NA	7.0E+02	NA	4.E-04

Not detected in groundwater or soil gas

	Cancer Risk	Hazard Index
TOTAL:	7E-07	8E-03

Bold = Cancer Risk > 1.0E-05 or Hazard Quotient > 1.0E+01

Where:

LADIcancer = IAC x EF x ED x EP/APcancer
ADInon-cancer = IAC x EF x ED x EP / APnon-cancer
Cancer Risk = LADIcancer x UR
Hazard Quotient = ADInon-cancer / Inhalation Reference Concentration

LADI = Life Time Average Daily Exposure
ADI = Average Daily Exposure
EPC = Exposure Point Concentration
$\mu g/m^3$ = micrograms per cubic meter

And where:

Exposure Frequency (EF) =	250	days/year (5 days a week for 26 weeks of exposure)
Exposure Duration (ED) =	8	hrs/day [1]
Exposure Period (EP) =	27	yr [1]
Unit Conversion (UC) =	0.042	days/hr
Averaging Period (APcancer) =	25550	days [1]
Averaging Period (APnon-cancer) =	9855	days [1]

[1] MADEP, 2006

Table 8
Commercial Worker
Inhalation of Indoor Air Exposure Pathway
New Bedford High School - Classroom A-2-105
New Bedford, Massachusetts

		EPC	Estimated Dose		Toxicity Values		Risk Estimates	
	Constituent	Indoor Air Concentration µg/m3	ADEcancer (Cancer) µg/m3	ADEnon-cancer (Non-cancer) µg/m3	Unit Risk per µg/m3	Chronic Noncancer Reference Concentration µg/m3	Cancer Risk (--)	Hazard Quotient (--)
67-64-1	Acetone	7.75E+00	6.9E-01	1.8E+00	NA	8.0E+02	NA	2.E-03
74-87-3	Chloromethane	1.07E+00	9.5E-02	2.5E-01	NA	9.0E+01	NA	3.E-03
56-23-5	Carbon tetrachloride	5.09E-01	4.5E-02	1.2E-01	1.5E-05	4.3E+02	7.E-07	3.E-04
78-93-3	2-Butanone	7.46E-01	6.6E-02	1.7E-01	NA	5.0E+03	NA	3.E-05
75-71-8	Dichlorodifluoromethane	2.20E+00	2.0E-01	5.1E-01	NA	2.0E+02	NA	3.E-03
108-88-3	Toluene	1.31E+00	1.2E-01	3.0E-01	NA	5.0E+03	NA	6.E-05
75-69-4	Trichlorofluoromethane	1.18E+00	1.0E-01	2.7E-01	NA	7.0E+02	NA	4.E-04

Not detected in groundwater or soil gas

	Cancer Risk	Hazard Index
TOTAL:	7E-07	8E-03

Bold = Cancer Risk >1.0E-05 or Hazard Quotient > 1.0E+01

Where:

LADEcancer = IAC x EFx ED x EP/APcancer
ADEnon-cancer = IAC x EF x ED x EP / APnon-cancer
Cancer Risk = LADEcancer x UR
Hazard Quotient = ADEnon-cancer / Inhalation Reference Concentration

LADE = Life Time Average Daily Exposure
ADE = Average Daily Exposure
EPC = Exposure Point Concentration
$\mu g/m^3$ = micrograms per cubic meter

And where:

Exposure Frequency (EF) =	250	days/year (5 days a week for 26 weeks of exposure)
Exposure Duration (ED) =	8	hrs/day [1]
Exposure Period (EP) =	27	yr [1]
Unit Conversion (UC) =	0.042	days/hr
Averaging Period (APcancer) =	25550	days [1]
Averaging Period (APnon-cancer) =	9855	days [1]

[1] MADEP, 2006

Table 9
Commercial Worker
Inhalation of Indoor Air Exposure Pathway
New Bedford High School - Classroom A-1-116
New Bedford, Massachusetts

		EPC	Estimated Dose		Toxicity Values		Risk Estimates	
	Constituent	Indoor Air Concentration µg/m3	ADEcancer (Cancer) µg/m3	ADEnon-cancer (Non-cancer) µg/m3	Unit Risk per µg/m3	Chronic Noncancer Reference Concentration µg/m3	Cancer Risk (--)	Hazard Quotient (--)
67-64-1	Acetone	5.30E+00	4.7E-01	1.2E+00	NA	8.0E+02	NA	2.E-03
74-87-3	Chloromethane	1.33E+00	1.2E-01	3.1E-01	NA	9.0E+01	NA	3.E-03
71-43-2	Benzene	3.58E-01	3.2E-02	8.2E-02	7.8E-06	3.0E+01	2.E-07	3.E-03
56-23-5	Carbon Tetrachloride	6.10E-01	5.4E-02	1.4E-01	1.5E-05	4.3E+02	8.E-07	3.E-04
78-93-3	2-Butanone	6.48E-01	5.8E-02	1.5E-01	NA	5.0E+03	NA	3.E-05
75-71-8	Dichlorodifluoromethane	2.85E+00	2.5E-01	6.6E-01	NA	2.0E+02	NA	3.E-03
75-69-4	Trichlorofluoromethane	1.48E+00	1.3E-01	3.4E-01	NA	7.0E+02	NA	5.E-04

Not detected in groundwater or soil gas

	Cancer Risk	Hazard Index
TOTAL:	1E-06	1E-02

Bold = Cancer Risk > 1.0E-05 or Hazard Quotient > 1.0E+01

Where:

LADEcancer = IAC x EF x ED x EP/APcancer
ADEnon-cancer = IAC x EF x ED x EP / APnon-cancer
Cancer Risk = LADEcancer x UR
Hazard Quotient = ADEnon-cancer / Inhalation Reference Concentration

LADE = Life Time Average Daily Exposure
ADE = Average Daily Exposure
EPC = Exposure Point Concentration
$\mu g/m^3$ = micrograms per cubic meter

And where:

Exposure Frequency (EF) =	250	days/year (5 days a week for 26 weeks of exposure)
Exposure Duration (ED) =	8	hrs/day [1]
Exposure Period (EP) =	27	yr [1]
Unit Conversion (UC) =	0.042	days/hr
Averaging Period (APcancer) =	25550	days [1]
Averaging Period (APnon-cancer) =	9855	days [1]

[1] MADEP, 2006

Table 10
Commercial Worker
Inhalation of Indoor Air Exposure Pathway
New Bedford High School - Classroom A-2-112
New Bedford, Massachusetts

		EPC	Estimated Dose		Toxicity Values		Risk Estimates	
	Constituent	Indoor Air Concentration µg/m3	ADEcancer (Cancer) µg/m3	ADEnon-cancer (Non-cancer) µg/m3	Unit Risk per µg/m3	Chronic Noncancer Reference Concentration µg/m3	Cancer Risk (--)	Hazard Quotient (--)
67-64-1	Acetone	5.02E+00	4.5E-01	1.2E+00	NA	8.0E+02	NA	1.E-03
74-87-3	Chloromethane	1.42E+00	1.3E-01	3.3E-01	NA	9.0E+01	NA	4.E-03
71-43-2	Benzene	3.22E-01	2.9E-02	7.4E-02	7.8E-06	3.0E+01	2.E-07	2.E-03
56-23-5	Carbon tetrachloride	5.78E-01	5.1E-02	1.3E-01	1.5E-05	4.3E+02	8.E-07	3.E-04
75-71-8	Dichlorodifluoromethane	2.56E+00	2.3E-01	5.9E-01	NA	2.0E+02	NA	3.E-03
75-69-4	Trichlorofluoromethane	1.36E+00	1.2E-01	3.1E-01	NA	7.0E+02	NA	4.E-04

Not detected in groundwater or soil gas

	Cancer Risk	Hazard Index
TOTAL:	1E-06	1E-02

Bold = Cancer Risk >1.0E-05 or Hazard Quotient > 1.0E+01

Where:

LADEcancer = IAC x EFx ED x EP/APcancer
ADEnon-cancer = IAC x EF x ED x EP / APnon-cancer
Cancer Risk = LADEcancer x UR
Hazard Quotient = ADEnon-cancer / Inhalation Reference Concentration

LADE = Life Time Average Daily Exposure
ADE = Average Daily Exposure
EPC = Exposure Point Concentration
$\mu g/m^3$ = micrograms per cubic meter

And where:

Exposure Frequency (EF) =	250	days/year (5 days a week for 26 weeks of exposure)
Exposure Duration (ED) =	8	hrs/day [1]
Exposure Period (EP) =	27	yr [1]
Unit Conversion (UC) =	0.042	days/hr
Averaging Period (APcancer) =	25550	days [1]
Averaging Period (APnon-cancer) =	9855	days [1]

[1] MADEP, 2006

Table 11
Commercial Worker
Inhalation of Indoor Air Exposure Pathway
New Bedford High School - Classroom A-1-110
New Bedford, Massachusetts

		EPC	Estimated Dose		Toxicity Values		Risk Estimates	
	Constituent	Indoor Air Concentration µg/m3	ADEcancer (Cancer) µg/m3	ADEnon-cancer (Non-cancer) µg/m3	Unit Risk per µg/m3	Chronic Noncancer Reference Concentration µg/m3	Cancer Risk (--)	Hazard Quotient (--)
67-64-1	Acetone	4.62E+00	4.1E-01	1.1E+00	NA	8.0E+02	NA	1.E-03
74-87-3	Chloromethane	1.01E+00	9.0E-02	2.3E-01	NA	9.0E+01	NA	3.E-03
56-23-5	Carbon tetrachloride	4.84E-01	4.3E-02	1.1E-01	1.5E-05	4.3E+02	6.E-07	3.E-04
75-71-8	Dichlorodifluoromethane	2.23E+00	2.0E-01	5.1E-01	NA	2.0E+02	NA	3.E-03
75-69-4	Trichlorofluoromethane	1.21E+00	1.1E-01	2.8E-01	NA	7.0E+02	NA	4.E-04

Not detected in groundwater or soil gas

	Cancer Risk	Hazard Index
TOTAL:	6E-07	7E-03

Bold = Cancer Risk >1.0E-05 or Hazard Quotient > 1.0E+01

Where:

LADEcancer = IAC x EFx ED x EP/APcancer
ADEnon-cancer = IAC x EF x ED x EP / APnon-cancer
Cancer Risk = LADEcancer x UR
Hazard Quotient = ADEnon-cancer / Inhalation Reference Concentration

LADE = Life Time Average Daily Exposure
ADE = Average Daily Exposure
EPC = Exposure Point Concentration
$\mu g/m^3$ = micrograms per cubic meter

And where:

Exposure Frequency (EF) =	250	days/year (5 days a week for 26 weeks of exposure)
Exposure Duration (ED) =	8	hrs/day [1]
Exposure Period (EP) =	27	yr [1]
Unit Conversion (UC) =	0.042	days/hr
Averaging Period (APcancer) =	25550	days [1]
Averaging Period (APnon-cancer) =	9855	days [1]

[1] MADEP, 2006

Table 12
Commercial Worker
Inhalation of Indoor Air Exposure Pathway
New Bedford High School - Lecture Room D-120
New Bedford, Massachusetts

		EPC	Estimated Dose		Toxicity Values		Risk Estimates	
	Constituent	Indoor Air Concentration µg/m3	ADEcancer (Cancer) µg/m3	ADEnon-cancer (Non-cancer) µg/m3	Unit Risk per µg/m3	Chronic Noncancer Reference Concentration µg/m3	Cancer Risk (--)	Hazard Quotient (--)
78-93-3	2-Butanone	2.44E+00	2.2E-01	5.6E-01	NA	5.0E+03	NA	1.E-04
71-55-6	1,1,1-Trichloroethane	7.14E+00	6.3E-01	1.6E+00	NA	5.2E+03	NA	3.E-04
67-64-1	Acetone	8.21E+00	7.3E-01	1.9E+00	NA	8.0E+02	NA	2.E-03
71-43-2	Benzene	4.48E+00	4.0E-01	1.0E+00	7.8E-06	3.0E+01	3.E-06	3.E-02
56-23-5	Carbon tetrachloride	4.78E-01	4.2E-02	1.1E-01	1.5E-05	4.3E+02	6.E-07	3.E-04
67-66-3	Chloroform	5.90E-01	5.2E-02	1.4E-01	2.3E-05	6.6E+02	1.E-06	2.E-04
74-87-3	Chloromethane	1.12E+00	9.9E-02	2.6E-01	NA	9.0E+01	NA	3.E-03
75-71-8	Dichlorodifluoromethane	2.28E+00	2.0E-01	5.2E-01	NA	2.0E+02	NA	3.E-03
1634-04-4	Methyl tert-butyl ether	4.74E+00	4.2E-01	1.1E+00	NA	3.0E+03	NA	4.E-04
91-20-3	Naphthalene	6.44E-01	5.7E-02	1.5E-01	NA	3.0E+00	NA	5.E-02
108-88-3	Toluene	3.69E+01	3.3E+00	8.5E+00	NA	5.0E+03	NA	2.E-03
127-18-4	Tetrachloroethene	1.76E+00	1.6E-01	4.1E-01	1.0E-05	4.6E+03	2.E-06	9.E-05
79-01-6	Trichloroethene	1.07E-01	9.5E-03	2.5E-02	1.7E-06	1.8E+02	2.E-08	1.E-04
75-69-4	Trichlorofluoromethane	1.58E+00	1.4E-01	3.6E-01	NA	7.0E+02	NA	5.E-04
100-41-4	Ethylbenzene	6.00E+00	5.3E-01	1.4E+00	NA	1.0E+03	NA	1.E-03
1330-20-7	Xylenes	2.55E+01	2.3E+00	5.9E+00	NA	1.0E+02	NA	6.E-02
95-63-6	1,2,4,-Trimethylbenzene	6.96E+00	6.2E-01	1.6E+00	NA	7.0E+00	NA	2.E-01
108-67-8	1,3,5-Trimethylbenzene	2.11E+00	1.9E-01	4.9E-01	NA	5.0E+01	NA	1.E-02
103-65-1	n-Propylbenzene	1.48E+00	1.3E-01	3.4E-01	NA	1.0E+03	NA	3.E-04

RfC for C9-C10 aromatics used for 1,3,5-trimethylbenzene
Not detected in groundwater or soil gas
Where:

	Cancer Risk	Hazard Index
TOTAL:	7E-06	4E-01

LADEcancer = IAC x EFx ED x EP/APcancer
ADEnon-cancer = IAC x EF x ED x EP / APnon-cancer
Cancer Risk = LADEcancer x UR
Hazard Quotient = ADEnon-cancer / Inhalation Reference Concentration

Bold = Cancer Risk >1.0E-05 or Hazard Quotient > 1.0E+01

LADE = Life Time Average Daily Exposure
ADE = Average Daily Exposure
EPC = Exposure Point Concentration
$\mu g/m^3$ = micrograms per cubic meter

And where:

Exposure Frequency (EF) =	250	days/year (5 days a week for 26 weeks of exposure)
Exposure Duration (ED) =	8	hrs/day [1]
Exposure Period (EP) =	27	yr [1]
Unit Conversion (UC) =	0.042	days/hr
Averaging Period (APcancer) =	25550	days [1]
Averaging Period (APnon-cancer) =	9855	days [1]

[1] MADEP, 2006

Table 13. Calculation of the Infinite Source Building Concentration
New Bedford High School
Current Scenario - Classroom A-3-112

OIL OR HAZARDOUS MATERIAL	Enthalpy of vaporization at ave. groundwater temperature, $\Delta H_{v,TS}$ (cal/mol)	Henry's law constant at ave. groundwater temperature, H_{TS} (atm-m^3/mol)	Henry's law constant at ave. groundwater temperature, H'_{TS} (unitless)	Stratum A effective diffusion coefficient, D^{eff}_A (cm^2/s)	Capill. Zone effective diffusion coefficient, D^{eff}_{cz} (cm^2/s)	Total effective diffusion coefficient, D^{eff}_T (cm^2/s)	Crack effective diffusion coefficient, D^{crack} (cm^2/s)	Exponent of equivalent foundation Peclet # exp(Pe^f) (unitless)	Infinite source indoor attenuation coefficient, α (unitless)	GW Concentration (µg/L)	Source vapor conc., C_{source} (µg/m^3)	Infinite source bldg. conc., $C_{building}$ (µg/m^3)
ACETONE	7,559	2.02E-05	8.69E-04	2.45E-02	2.82E-03	3.50E-04	2.45E-02	7.57E+54	2.08E-03		1.37E+02	2.84E-01
BENZENE	8,122	2.68E-03	1.16E-01	1.74E-02	1.49E-03	1.80E-04	1.74E-02	2.23E+77	1.53E-03		3.90E+00	5.96E-03
METHYL ETHYL KETONE	8,614	2.63E-05	1.13E-03	1.59E-02	1.84E-03	2.29E-04	1.59E-02	1.66E+84	1.73E-03		5.50E+00	9.52E-03
METHYL ISOBUTYL KETONE	10,315	5.49E-05	2.36E-03	1.48E-02	1.45E-03	1.77E-04	1.48E-02	5.58E+90	1.52E-03		5.20E+00	7.88E-03
C9-C10 Aromatics (Isopropylbenzene)		3.96E-03	1.70E-01	1.38E-02	1.18E-03	1.42E-04	1.38E-02	1.73E+97	1.34E-03		7.50E+00	1.00E-02
TETRACHLOROETHYLENE	9,553	7.53E-03	3.24E-01	1.42E-02	1.21E-03	1.47E-04	1.42E-02	3.45E+94	1.36E-03		1.80E+00	2.45E-03
TOLUENE	9,154	2.93E-03	1.26E-01	1.72E-02	1.47E-03	1.77E-04	1.72E-02	1.73E+78	1.52E-03		3.00E+00	4.55E-03
TRICHLOROETHYLENE	8,557	4.58E-03	1.97E-01	1.56E-02	1.33E-03	1.61E-04	1.56E-02	1.45E+86	1.44E-03		1.50E+00	2.16E-03
XYLENES (Mixed Isomers)	10,248	2.65E-03	1.14E-01	1.52E-02	1.30E-03	1.57E-04	1.52E-02	3.26E+88	1.42E-03		2.00E+00	2.83E-03
CHLOROMETHANE	4,747	5.76E-03	2.48E-01	2.49E-02	2.13E-03	2.56E-04	2.49E-02	1.05E+54	1.82E-03		4.00E-01	7.29E-04
DICHLORODIFLUOROMETHANE	8,383	1.62E-01	6.96E+00	1.31E-02	1.12E-03	1.35E-04	1.31E-02	2.27E+102	1.30E-03		2.60E+00	3.37E-03

Lydia Thompson, MassDEP ORS
(617) 556-1165
Lydia.Thompson@state.ma.us

GW-2 Model Assumptions

Site-Specific Data Entry

Easily Measured Site Information

MORE ↓

ENTER Depth below grade to bottom of enclosed space floor, L_F (cm)	ENTER Depth below grade to soil gas sample depth, L_{WT} (cm)	ENTER Average soil/ groundwater temperature, T_S (°C)
12.1	14	10

Site Soil Information

MORE ↓

ENTER Thickness of soil stratum A, h_A (cm)	ENTER Thickness of soil stratum B, (Enter value or 0) h_B (cm)	ENTER Thickness of soil stratum C, (Enter value or 0) h_C (cm)	ENTER Soil stratum directly above water table, (A, B, or C)	ENTER SCS soil type directly above water table
	Totals must add up to value of L_{WT}			
14	0	0	A	S

MORE ↓

Stratum A - Decends down from the soil surface to at least the depth entered for L_F, and perhaps as deep as the water table (L_{WT})

ENTER Soil stratum A SCS soil type (used to estimate soil vapor permeability)	OR	ENTER User-defined stratum A soil vapor permeability, k_v (cm^2)	ENTER Stratum A soil dry bulk density, ρ_b^A (g/cm^3)	ENTER Stratum A soil total porosity, n^A (unitless)	ENTER Stratum A soil water-filled porosity, θ_w^A (cm^3/cm^3)
S			1.5	0.43	0.06

Lydia Thompson, MassDEP ORS
(617) 556-1165
Lydia.Thompson@state.ma.us

MORE ↓

Stratum B - Located below Stratum A, extending to Stratum C or the water table. Thickness may be zero if only one stratum is considered.

ENTER Stratum B soil dry bulk density, ρ_b^B (g/cm^3)	ENTER Stratum B soil total porosity, n^B (unitless)	ENTER Stratum B soil water-filled porosity, θ_w^B (cm^3/cm^3)
1.5	0.43	0.06

MORE ↓

Stratum C - Located below Stratum B, extending to the water table. Thickness may be zero if only one or two strata are considered.

ENTER Stratum C soil dry bulk density, ρ_b^C (g/cm^3)	ENTER Stratum C soil total porosity, n^C (unitless)	ENTER Stratum C soil water-filled porosity, θ_w^C (cm^3/cm^3)
1.5	0.43	0.06

Building Information - Modify ONLY if Site-specific information is documented.

MORE ↓

ENTER Enclosed space floor thickness, L_{crack} (cm)	ENTER Soil-bldg. pressure differential, ΔP (g/cm-s^2)	ENTER Enclosed space floor length, L_B (cm)	ENTER Enclosed space floor width, W_B (cm)	ENTER Enclosed space height, H_B (cm)	ENTER Floor-wall seam crack width, w (cm)	ENTER Indoor air exchange rate, ER (1/h)
12.1	40	914.4	914.4	268.2	0.1	0.45

Lydia Thompson, MassDEP ORS
(617) 556-1165
Lydia.Thompson@state.ma.us

Table 14. Calculation of the Infinite Source Building Concentration
New Bedford High School
Current Scenario - Lecture Hall D-120

OIL OR HAZARDOUS MATERIAL	Enthalpy of vaporization at ave. groundwater temperature, $\Delta H_{v,TS}$ (cal/mol)	Henry's law constant at ave. groundwater temperature, H_{TS} (atm-m^3/mol)	Henry's law constant at ave. groundwater temperature, H'_{TS} (unitless)	Stratum A effective diffusion coefficient, D^{eff}_A (cm^2/s)	Capill. Zone effective diffusion coefficient, D^{eff}_{cz} (cm^2/s)	Total effective diffusion coefficient, D^{eff}_T (cm^2/s)	Crack effective diffusion coefficient, D^{crack} (cm^2/s)	Exponent of equivalent foundation Peclet # exp(Pe^f) (unitless)	Infinite source indoor attenuation coefficient, α (unitless)	GW Concentration (µg/L)	Source vapor conc., C_{source} (µg/m^3)	Infinite source bldg. conc., $C_{building}$ (µg/m^3)
ACETONE	7,559	2.02E-05	8.69E-04	2.45E-02	2.82E-03	3.50E-04	2.45E-02	1.04E+50	5.33E-04		4.73E+03	2.52E+00
BENZENE	8,122	2.68E-03	1.16E-01	1.74E-02	1.49E-03	1.80E-04	1.74E-02	3.15E+70	3.78E-04		1.04E+01	3.93E-03
METHYL ETHYL KETONE	8,614	2.63E-05	1.13E-03	1.59E-02	1.84E-03	2.29E-04	1.59E-02	5.77E+76	4.34E-04		6.32E+00	2.74E-03
TETRACHLOROETHYLENE	9,553	7.53E-03	3.24E-01	1.42E-02	1.21E-03	1.47E-04	1.42E-02	1.46E+86	3.33E-04		6.19E+01	2.06E-02
XYLENES (Mixed Isomers)	10,248	2.65E-03	1.14E-01	1.52E-02	1.30E-03	1.57E-04	1.52E-02	4.73E+80	3.48E-04		3.72E+01	1.29E-02
CHLOROMETHANE	4,747	5.76E-03	2.48E-01	2.49E-02	2.13E-03	2.56E-04	2.49E-02	1.73E+49	4.60E-04		3.18E+00	1.46E-03
DICHLORODIFLUOROMETHANE	8,383	1.62E-01	6.96E+00	1.31E-02	1.12E-03	1.35E-04	1.31E-02	1.96E+93	3.16E-04		2.83E+00	8.95E-04

Lydia Thompson, MassDEP ORS
(617) 556-1165
Lydia.Thompson@state.ma.us

GW-2 Model Assumptions

Site-Specific Data Entry

Easily Measured Site Information

MORE ↓

ENTER Depth below grade to bottom of enclosed space floor, L_F (cm)	ENTER Depth below grade to soil gas sample depth, L_{WT} (cm)	ENTER Average soil/ groundwater temperature, T_S (°C)
10.8	12.7	10

Site Soil Information

MORE ↓

ENTER Thickness of soil stratum A, h_A (cm)	ENTER Thickness of soil stratum B, (Enter value or 0) h_B (cm)	ENTER Thickness of soil stratum C, (Enter value or 0) h_C (cm)	ENTER Soil stratum directly above water table, (A, B, or C)	ENTER SCS soil type directly above water table
12.7	0	0	A	S

Totals must add up to value of L_{WT}

MORE ↓

Stratum A - Decends down from the soil surface to at least the depth entered for L_F, and perhaps as deep as the water table (L_{WT})

ENTER Soil stratum A SCS soil type (used to estimate soil vapor permeability)	OR	ENTER User-defined stratum A soil vapor permeability, k_v (cm^2)	ENTER Stratum A soil dry bulk density, ρ_b^A (g/cm^3)	ENTER Stratum A soil total porosity, n^A (unitless)	ENTER Stratum A soil water-filled porosity, θ_w^A (cm^3/cm^3)
S			1.5	0.43	0.06

Lydia Thompson, MassDEP ORS
(617) 556-1165
Lydia.Thompson@state.ma.us

MORE ↓

Stratum B - Located below Stratum A, extending to Stratum C or the water table. Thickness may be zero if only one stratum is considered.

ENTER Stratum B soil dry bulk density, ρ_b^B (g/cm^3)	ENTER Stratum B soil total porosity, n^B (unitless)	ENTER Stratum B soil water-filled porosity, θ_w^B (cm^3/cm^3)
1.5	0.43	0.06

MORE ↓

Stratum C - Located below Stratum B, extending to the water table. Thickness may be zero if only one or two strata are considered.

ENTER Stratum C soil dry bulk density, ρ_b^C (g/cm^3)	ENTER Stratum C soil total porosity, n^C (unitless)	ENTER Stratum C soil water-filled porosity, θ_w^C (cm^3/cm^3)
1.5	0.43	0.06

Building Information - Modify ONLY if Site-specific information is documented.

MORE ↓

ENTER Enclosed space floor thickness, L_{crack} (cm)	ENTER Soil-bldg. pressure differential, ΔP (g/cm-s^2)	ENTER Enclosed space floor length, L_B (cm)	ENTER Enclosed space floor width, W_B (cm)	ENTER Enclosed space height, H_B (cm)	ENTER Floor-wall seam crack width, w (cm)	ENTER Indoor air exchange rate, ER (1/h)
10.8	40	664.5	859.5	268.2	0.1	2

Lydia Thompson, MassDEP ORS
(617) 556-1165
Lydia.Thompson@state.ma.us

Table 15
Commercial Worker
Inhalation of Indoor Air Exposure Pathway - Modeled Indoor Air Concentrations
New Bedford High School - Classroom A-3-112
New Bedford, Massachusetts

		EPC	Estimated Dose		Toxicity Values		Risk Estimates	
	Constituent	Indoor Air Concentration µg/m3	ADEcancer (Cancer) µg/m3	ADEnon-cancer (Non-cancer) µg/m3	Unit Risk µg/m3	Chronic Noncancer Reference Concentration µg/m3	Cancer Risk (--)	Hazard Quotient (--)
78-93-3	2-Butanone	9.52E-03	8.5E-04	2.2E-03	NA	5.0E+03	NA	4.E-07
67-64-1	Acetone	2.84E-01	2.5E-02	6.5E-02	NA	8.0E+02	NA	8.E-05
71-43-2	Benzene	5.96E-03	5.3E-04	1.4E-03	7.8E-06	3.0E+01	4.E-09	5.E-05
74-87-3	Chloromethane	7.29E-04	6.5E-05	1.7E-04	NA	9.0E+01	NA	2.E-06
C9-C10	C9-C10 Aromatics (Isopropylbenzene)	1.00E-02	8.9E-04	2.3E-03	NA	5.0E+01	NA	5.E-05
75-71-8	Dichlorodifluoromethane	3.37E-03	3.0E-04	7.8E-04	NA	2.0E+02	NA	4.E-06
108-10-1	Methyl isobutylketone	7.88E-03	7.0E-04	1.8E-03	NA	3.0E+03	NA	6.E-07
127-18-4	Tetrachloroethene	2.45E-03	2.2E-04	5.6E-04	1.0E-05	4.6E+03	2.E-09	1.E-07
108-88-3	Toluene	4.55E-03	4.0E-04	1.0E-03	NA	5.0E+03	NA	2.E-07
79-01-6	Trichloroethene	2.16E-03	1.9E-04	5.0E-04	1.7E-06	1.8E+02	3.E-10	3.E-06
1330-20-7	Xylenes	2.83E-03	2.5E-04	6.5E-04	NA	1.0E+02	NA	7.E-06

	Cancer Risk	Hazard Index
TOTAL:	7E-09	2E-04

Bold = Cancer Risk > 1.0E-05 or Hazard Quotient > 1.0E+01

Where:

LADEcancer = IAC x EF x ED x EP/APcancer
ADEnon-cancer = IAC x EF x ED x EP / APnon-cancer
Cancer Risk = LADEcancer x UR
Hazard Quotient = ADEnon-cancer / Inhalation Reference Concentration

LADE = Life Time Average Daily Exposure
ADE = Average Daily Exposure
EPC = Exposure Point Concentration
$\mu g/m^3$ = micrograms per cubic meter

And where:

Exposure Frequency (EF) =	250	days/year (5 days a week for 26 weeks of exposure)
Exposure Duration (ED) =	8	hrs/day [1]
Exposure Period (EP) =	27	yr [1]
Unit Conversion (UC) =	0.042	days/hr
Averaging Period (APcancer) =	25550	days [1]
Averaging Period (APnon-cancer) =	9855	days [1]

[1] MADEP, 2006

Table 16
Commercial Worker
Inhalation of Indoor Air Exposure Pathway - Modeled Indoor Air Concentrations
New Bedford High School - Lecture Hall D-120
New Bedford, Massachusetts

		EPC	Estimated Dose		Toxicity Values		Risk Estimates	
	Constituent	Indoor Air Concentration µg/m3	ADIcancer (Cancer) µg/m3	ADInon-cancer (Non-cancer) µg/m3	Unit Risk µg/m3	Chronic Noncancer Reference Concentration µg/m3	Cancer Risk (--)	Hazard Quotient (--)
78-93-3	2-Butanone	2.74E-03	2.4E-04	6.3E-04	NA	5.0E+03	NA	1.E-07
67-64-1	Acetone	2.52E+00	2.2E-01	5.8E-01	NA	8.0E+02	NA	7.E-04
71-43-2	Benzene	3.93E-03	3.5E-04	9.0E-04	7.8E-06	3.0E+01	3.E-09	3.E-05
74-87-3	Chloromethane	1.46E-03	1.3E-04	3.4E-04	NA	9.0E+01	NA	4.E-06
75-71-8	Dichlorodifluoromethane	8.95E-04	7.9E-05	2.1E-04	NA	2.0E+02	NA	1.E-06
127-18-4	Tetrachloroethene	2.06E-02	1.8E-03	4.7E-03	1.0E-05	4.6E+03	2.E-08	1.E-06
1330-20-7	Xylenes	1.29E-02	1.1E-03	3.0E-03	NA	1.0E+02	NA	3.E-05

	Cancer Risk	Hazard Index
TOTAL:	2E-08	8E-04

Bold = Cancer Risk >1.0E-05 or Hazard Quotient > 1.0E+01

Where:

LADIcancer = IAC x EFx ED x EP/APcancer
ADInon-cancer = IAC x EF x ED x EP / APnon-cancer
Cancer Risk = LADIcancer x UR
Hazard Quotient = ADInon-cancer / Inhalation Reference Concentration

LADI = Life Time Average Daily Exposure
ADI = Average Daily Exposure
EPC = Exposure Point Concentration
$\mu g/m^3$ = micrograms per cubic meter

And where:

Exposure Frequency (EF) =	250	days/year (5 days a week for 26 weeks of exposure)
Exposure Duration (ED) =	8	hrs/day [1]
Exposure Period (EP) =	27	yr [1]
Unit Conversion (UC) =	0.042	days/hr
Averaging Period (APcancer) =	25550	days [1]
Averaging Period (APnon-cancer) =	9855	days [1]

[1] MADEP, 2006

Figure 1
Determination of VOCs in Indoor Air Related to Vapor Intrusion
New Bedford High School
New Bedford, Massachusetts

GROUNDWATER	SOIL GAS	INDOOR AIR POENTIALLY RELATED TO VI	INDOOR AIR NOT RELATED TO VI
cis-1,2-Dichloroethene	1,1,1-Trichloroethane	Dichlorodifluoromethane	Methylene chloride
p-Isopropyltoluene	**1,1-Dichloroethene**	Chloromethane	Methyl tert butyl ether
Tetrachloroethene	1,2,4-Trimethylbenzene	**Vinyl chloride**	**1,2-Dichloroethane**
Trichloroethene	1,3,5-Trimethybenzene	Acetone	**Carbon tetrachloride**
Vinyl Chloride	2-Butanone	Trichlorofluoromethane	
	2-Hexanone	trans-1,2-Dichloroethene	
	Acetone	2-Butanone	
	Benzene	**cis-1,2-Dichloroethene**	
	Carbon disulfide	**Chloroform**	
	Chloroethane	1,1,1-Trichloroethane	
	Chloroform	**Benzene**	
	Chloromethane	**Trichloroethene**	
	cis-1,2-Dichloroethene	4-Methyl-2-pentanone	
	Dichlorodifluoromethane	Toluene	
	Ethylbenzene	**Tetrachloroethene**	
	4-Methyl-2-pentanone	Ethylbenzene	
	p/m-Xylene	**p/m-Xylene**	
	o-Xylene	o-Xylene	
	Styrene	n-Propylbenzene	
	Tetrachloroethene	1,3,5-Trimethybenzene	
	Tetrahydrofuran	1,2,4-Trimethylbenzene	
	Toluene	**Naphthalene**	
	trans-1,2-Dichloroethene		
	Trichloroethene		
	Trichlorofluoromethane		
	Vinyl chloride		
	Naphthalene		
	Isopropylbenzene		
	n-Butylbenzene		
	tert-Butylbenzene		
	n-Propylbenzene		

NOTES:

Only detected compounds shown.

Shaded values indicate exceedance of GW-2 Stand [redacted] **oil gas)/** [redacted]

Additional petroleum-related compounds, not part of the groundwater analytical program, that are considered potentially site-related.

Compounds not detected in groundwater (on-property or off-property) and therefore, not considered site-related.

Compounds with consistently higher first floor and/or outdoor air concentrations than basement, indicating outdoor or first floor source.

Indoor air COPCs not evaluated at a specific residence due to the high probability that an unrelated indoor first floor source is present.

IATV - Indoor Air Threshold Value

COPC - Contaminant of Potential Concern

APPENDIX F

GROUNDWATER MONITORING WELL INSTALLATION LOGS – APRIL 2010

TRC
Wannalancit Mills
650 Suffolk Street
Lowell MA
Telephone: 978-970-5600
Fax: 978-453-1995

BORING/WELL CONSTRUCTION LOG

CLIENT/PROJECT NUMBER City of New Bedford/115058
BORING/WELL NUMBER MW-20
TRC GEOLOGIST A. Weiss
DRILLING CONTRACTOR/FOREMAN Geosearch/Rodney Kaddy
DATE DRILLED 4/2/2010
LOCATION NBHS - South side of Auditorium door
SAMPLING METHOD 60" Macrocore
DRILLING METHOD Direct Push / 6610 DT Track Rig
NOTES No Soil samples collected.

SCREEN TYPE/SLOT 2-inch Schedule 40 Slotted (0.010-in) PVC
FILTER PACK TYPE #2 Sand
SEAL TYPE Bentonite
DEPTH TO WATER (Approximate Feet) 12.2
TOTAL DEPTH (Feet) 21.9
GROUND ELEVATION (Feet) 95.78
REFERENCE ELEVATION (Feet) 95.4

DEPTH (ft. BGL)	BLOW COUNTS	PEN/REC (INCHES)	CORE #	GRAPHIC LOG	LITHOLOGIC DESCRIPTION	Field Testing (ppm)	SAMPLE ID/ TIME
1		60/22	S-1		0-6" Brown TOPSOIL.	NA	
2, 3, 4					6-22" Tan medium SAND.		
5		60/37	S-2		0-7" Tan medium SAND.	NA	
6, 7, 8, 9					7-37" Tan to gray fine-medium SAND, fining toward bottom and increasing in density.		
10		60/34	S-3		0-34" Tan to gray medium SAND, moist to wet at 12-inches.	NA	
11, 12, 13, 14							
15					End of Boring @ 15 feet (Well casing driven to 22 feet)		
16, 17, 18, 19, 20, 21							

WELL DIAGRAM

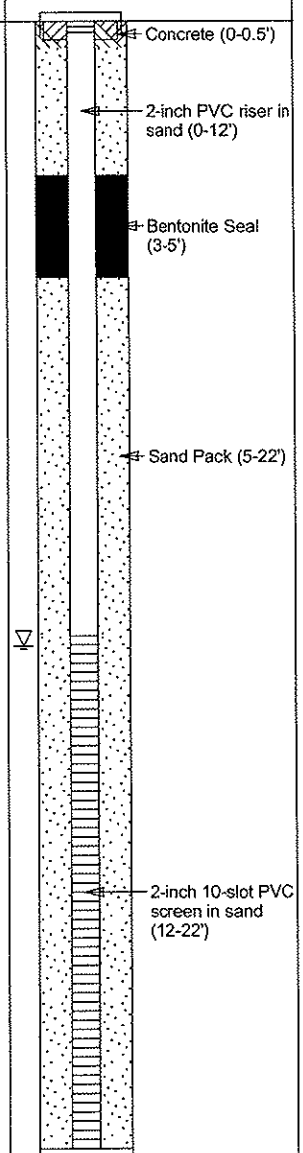

TRC
Wannalancit Mills
650 Suffolk Street
Lowell MA
Telephone: 978-970-5600
Fax: 978-453-1995

BORING/WELL CONSTRUCTION LOG

CLIENT/PROJECT NUMBER City of New Bedford/115058
BORING/WELL NUMBER MW-21
TRC GEOLOGIST A. Weiss
DRILLING CONTRACTOR/FOREMAN Geosearch/Rodney Kaddy
DATE DRILLED 4/2/2010
LOCATION NBHS - Along sidewalk near administration entrance
SAMPLING METHOD 60" Macrocore
DRILLING METHOD Direct Push / 6610 DT Track Rig
NOTES No Soil samples collected.

SCREEN TYPE/SLOT 2-inch Schedule 40 Slotted (0.010-in) PVC
FILTER PACK TYPE #2 Sand
SEAL TYPE Bentonite
DEPTH TO WATER (Approximate Feet) 8.2
TOTAL DEPTH (Feet) 19.8
GROUND ELEVATION (Feet) 92.56
REFERENCE ELEVATION (Feet) 92.22

DEPTH (ft. BGL)	BLOW COUNTS	PEN/REC (INCHES)	CORE #	GRAPHIC LOG	LITHOLOGIC DESCRIPTION	Field Testing (ppm)	SAMPLE ID/ TIME
		60/37	S-1		0-6" Brown TOPSOIL, grass at surface.	0.5	
1					6-17" Tan medium SAND.		
2					17-37" Tan to gray fine SAND.		
3							
4							
5		60/43	S-2		0-6" Tan to gray fine SAND.	0.0	
6					6-24" Tan fine-medium SAND, moist.		
7							
8					24-43" Tan medium SAND, some fine gravel, moist to wet.		
9							
10		60/60	S-3		0-7" Tan medium SAND, moist to wet.	0.0	
11					7-25" Medium-coarse SAND, saturated.		
12					25-60" Brown coarse SAND, some fine-coarse gravel, saturated.		
13							
14							
15					End of Boring @ 15 feet		
16					(Well casing driven to 20 feet)		
17							
18							
19							

WELL DIAGRAM

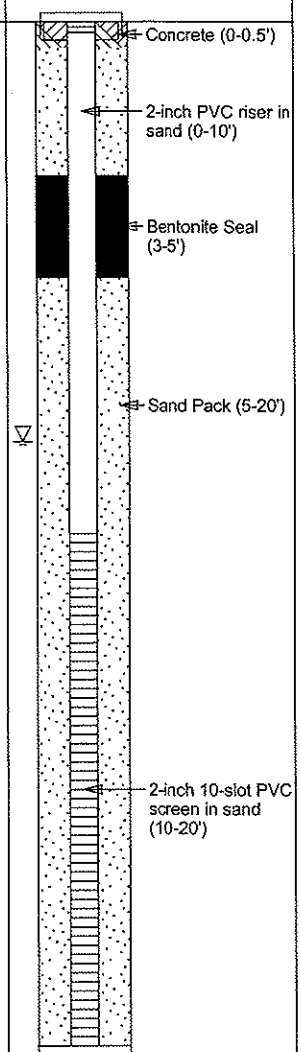

Wannalancit Mills
650 Suffolk Street
Lowell MA
Telephone: 978-970-5600
Fax: 978-453-1995

BORING/WELL CONSTRUCTION LOG

CLIENT/PROJECT NUMBER City of New Bedford/115058
BORING/WELL NUMBER MW-22
TRC GEOLOGIST A. Weiss
DRILLING CONTRACTOR/FOREMAN Geosearch/Rodney Kaddy
DATE DRILLED 4/2/2010
LOCATION NBHS - Northeast corner of flagpole island
SAMPLING METHOD 60" Macrocore
DRILLING METHOD Direct Push / 6610 DT Track Rig
NOTES No Soil samples collected.

SCREEN TYPE/SLOT 2-inch Schedule 40 Slotted (0.010-in) PVC
FILTER PACK TYPE #2 Sand
SEAL TYPE Bentonite
DEPTH TO WATER (Approximate Feet) 6.8
TOTAL DEPTH (Feet) 14.2
GROUND ELEVATION (Feet) 90.85
REFERENCE ELEVATION (Feet) 90.46

DEPTH (ft. BGL)	BLOW COUNTS	PEN/REC (INCHES)	CORE #	GRAPHIC LOG	LITHOLOGIC DESCRIPTION	Field Testing (ppm)	SAMPLE ID/ TIME
		60/35	S-1		0-3" Brown TOPSOIL.	0.0	
1					3-9" Brown medium-coarse SAND, little fine gravel.		
2					9-35" Black FILL (glass, ash, coal, wood and white chalky material).		
3							
4							
5		60/27	S-2		0-10" Black FILL (coal, ash, some glass), wet.	0.0	
6							
7					10-15' Black FILL (wood), saturated.		
8					15-24" Dark-brown coarse SAND, some fine-medium gravel.		
9							
					24-27" Black organic PEAT.		
10		60/44	S-3		0-25" Black organic PEAT.	0.0	
11							
12							
13					25-44" Gray native fine SAND.		
14							
					End of Boring @ 15 feet (Well set @ 14 feet)		

WELL DIAGRAM

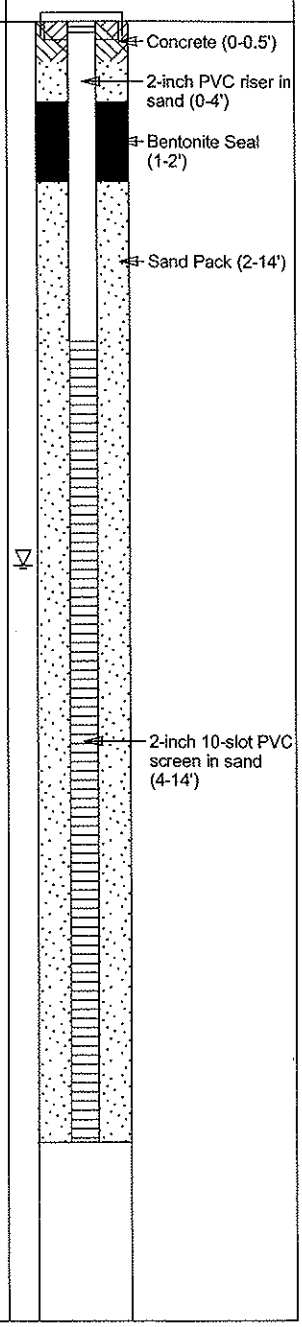

TRC
Wannalancit Mills
650 Suffolk Street
Lowell MA
Telephone: 978-970-5600
Fax: 978-453-1995

BORING/WELL CONSTRUCTION LOG

CLIENT/PROJECT NUMBER City of New Bedford/115058
BORING/WELL NUMBER MW-23
TRC GEOLOGIST A. Weiss
DRILLING CONTRACTOR/FOREMAN Geosearch/Rodney Kaddy
DATE DRILLED 4/2/2010
LOCATION NBHS - Southwest corner of flagpole island
SAMPLING METHOD 60" Macrocore
DRILLING METHOD Direct Push / 6610 DT Track Rig
NOTES No Soil samples collected.

SCREEN TYPE/SLOT 2-inch Schedule 40 Slotted (0.010-in) PVC
FILTER PACK TYPE #2 Sand
SEAL TYPE Bentonite
DEPTH TO WATER (Approximate Feet) 4.5
TOTAL DEPTH (Feet) 11.9
GROUND ELEVATION (Feet) 89.42
REFERENCE ELEVATION (Feet) 89.12

DEPTH (ft. BGL)	BLOW COUNTS	PEN/REC (INCHES)	CORE #	GRAPHIC LOG	LITHOLOGIC DESCRIPTION	Field Testing (ppm)	SAMPLE ID/ TIME
		60/25	S-1		0-8" TOPSOIL.	0.0	
1							
					8-20" Brown FILL (ash, coal, trace glass).		
2							
3							
4					20-25" White FILL (ash, brick and coal), moist.		
5		60/0	S-2		No Recovery - Material saturated and slid out of liner when pulled up. Material Likely a mixture of fill and organic peat.	NA	
6							
7							
8							
9							
10					End of Boring @ 10 feet (Well casing driven to 12 feet)		
11							

WELL DIAGRAM

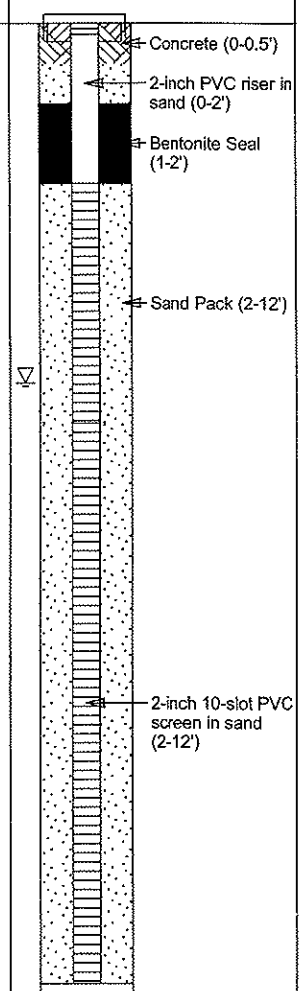

TRC
Wannalancit Mills
650 Suffolk Street
Lowell MA
Telephone: 978-970-5600
Fax: 978-453-1995

BORING/WELL CONSTRUCTION LOG

CLIENT/PROJECT NUMBER City of New Bedford/115058
BORING/WELL NUMBER MW-24
TRC GEOLOGIST A. Weiss
DRILLING CONTRACTOR/FOREMAN Geosearch/Rodney Kaddy
DATE DRILLED 4/2/2010
LOCATION NBHS - midway down sidewalk to gym entrance
SAMPLING METHOD 60" Macrocore
DRILLING METHOD Direct Push / 6610 DT Track Rig
NOTES No Soil samples collected.

SCREEN TYPE/SLOT 2-inch Schedule 40 Slotted (0.010-in) PVC
FILTER PACK TYPE #2 Sand
SEAL TYPE Bentonite
DEPTH TO WATER (Approximate Feet) 5.2
TOTAL DEPTH (Feet) 14.2
GROUND ELEVATION (Feet) 89.21
REFERENCE ELEVATION (Feet) 88.72

DEPTH (ft. BGL)	BLOW COUNTS	PEN/REC (INCHES)	CORE #	GRAPHIC LOG	LITHOLOGIC DESCRIPTION	Field Testing (ppm)	SAMPLE ID/ TIME
		60/36	S-1		0-8' Brown TOPSOIL.	0.0	
1					8-10" Red BRICK.		
					10-26" Brown to tan medium SAND.		
2							
3							
					26-30" White pulverized ROCK.		
4					30-36" Dark-brown SILT and FILL (coal and ash).		
5		60/18	S-2		0-14" Brown FILL (coal, ash, glass, brick and roofing tile with creosote odor, trace metal pieces).	0.0	
6							
7							
8							
9					14-18" Black organic PEAT.		
10					End of Boring @ 10 feet		
					(Well casing driven to 14 feet)		
11							
12							
13							
14							

WELL DIAGRAM

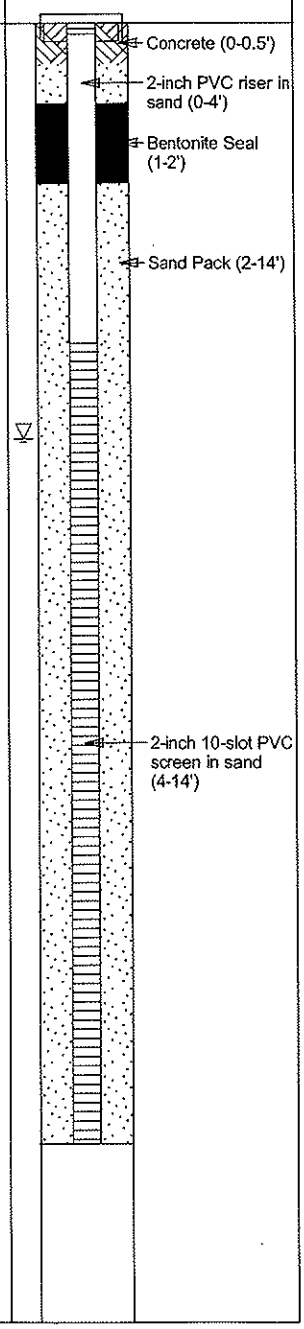

APPENDIX G

GROUNDWATER MONITORING SAMPLING LOGS – APRIL 2010

TRC

Low-flow Groundwater Sampling Data Record

Project:	Project No.:	Date/Time:	Sheet 1 of 1
City of NB	115058	4/9/10/0810	

TRC Personnel: A. Weiss

Well Identification: MW-4

WELL INTEGRITY

	YES	NO
Protect. Casing Secure	X	
Concrete Collar Intact	X	
PVC Stick-up Intact	X	
Well Cap Present	X	
Security Lock Present		X

Protective Casing Stick-up (from ground): NA ft.

Riser Stick-up (from ground): NA ft.

WELL DIAMETER: 2 inch / 4 inch / 6 inch / X 1 in

WELL MATERIAL: X PVC / SS / ___

Well Depth 11.32 ft. X top of riser / top of casing / ___ — X measured / historical

Water Depth 0.89 ft.

LNAPL/DNAPL Depth = ___ Thickness = ___

LOW FLOW DATA

Depth of pump intake: 10'

Static water level after pump put into well: 0.88'

Initial purge Rate/ Water Level (100-400 ml/min):

Adjusted purge Rates/time/WL(record changes): Pumping very low, No draw down. Turned up slightly.

Flow rate at time of sampling: 80 mL/min

PID SCREENING MEAS.

Background	—
Well Mouth	—

FIELD WATER QUALITY MEASUREMENTS (record at 3-5 minute intervals)

Time	0825	0830	0835	0840	0845	0850	0855			
Temp. (C)	16.34	16.12	15.96	15.85	15.84	15.77	15.66			
Conduct. (µmhos/cm)	0.371	0.336	0.316	0.301	0.299	0.298	0.297			
DO (mg/l)	4.19	3.31	3.02	3.04	3.07	3.05	3.02	STABLE		
pH (Std. Units)	5.82	5.83	5.85	5.87	5.89	5.89	5.89			
Eh (millivolts)	132.5	133.6	134.1	135.8	137.3	138.9	141.2			
Turb. (NTU)	11.9	10.23	6.73	4.03	4.01	3.67	3.36			
Flow (ml/min)	104	104	106	106	55	82	80			
Depth To Water (ft)	0.89	0.92	0.90	0.90	0.89	0.90	0.90			
Time										
Temp. (C)										
Conduct. (µmhos/cm)										
DO (mg/l)										
pH (Std. Units)										
Eh (millivolts)										
Turb. (NTU)										
Flow (ml/min)										
Depth To Water (ft)										

Pump Type	Purge	Sample
Peristaltic Pump		
Submersible Pump		
Bladder Pump	X	X
Other: ___		

Description of Sampling Equipment and Flow Rate: 6000XLMYSI, Solinst water level, MP15 controller w/ CO_2 gas, Lamotte 2020

Analytical Parameter	Filtered (Y/N)	Preservation	Volume	Time Collected	Sample #	Case #
VOCs	N	HCl	2, 40mL VOA Vials	0900	MW-4	

K:\geosci\fieldforms\lowflowrecord.ppt

Signed: Allison Weiss

Rev: 1 Feb 2007

9/5/95

TRC

Low-flow Groundwater Sampling Data Record

Project: City of NB | Project No.: 115058 | Date/Time: 4/8/10 / 1300 | Sheet 1 of 1

TRC Personnel: A. Weiss

Well Identification: MW-5

WELL INTEGRITY

	YES	NO
Protect. Casing Secure	X	
Concrete Collar Intact	X	
PVC Stick-up Intact	X	
Well Cap Present	X	
Security Lock Present		X

Protective Casing Stick-up (from ground): NA ft.

Riser Stick-up (from ground): NA ft.

WELL DIAMETER: X 2 inch; 4 inch; 6 inch; X 1 in

WELL MATERIAL: X PVC; SS; ___

Well Depth: 10.9 ft. X top of riser; top of casing; ___ X measured; historical

Water Depth: 1.45 ft.

LNAPL/DNAPL Depth = —

Thickness =

LOW FLOW DATA

Depth of pump intake: 7'

Static water level after pump put into well: 1.44

Initial purge Rate/ Water Level (100-400 ml/min): 85 ml/min

Adjusted purge Rates/time/WL(record changes): Adjustments remained the same but flow fluctuated w/ pump.

Flow rate at time of sampling: 125

PID SCREENING MEAS.

Background	
Well Mouth	~~NS~~ 0.0

FIELD WATER QUALITY MEASUREMENTS (record at 3-5 minute intervals)

Time	1310	1315	1320	1325	1330	1335	1340	1345	1350	
Temp. (C)	21.24	21.53	21.68	21.87	21.93	22.0	22.06	22.15	22.17	
Conduct. (µmhos/cm)	0.338	0.332	0.332	0.335	0.336	0.340	0.345	0.355	0.358	
DO (mg/l)	2.40	1.38	1.26	1.19	1.20	1.18	1.16	1.13	1.12	STABLE w/
pH (Std. Units)	6.30	6.36	6.36	6.38	6.39	6.4	6.41	6.42	6.43	
Eh (millivolts)	-61.8	-66.7	-70.1	-68.0	-64.6	-64.3	-63.1	-62.5	-62.5	Turbidity
Turb. (NTU)	53.7	34.9	26.7	17.2	14.5	11.7	8.33	6.14	5.10	below
Flow (ml/min)	85	100	100	95	90	95	100	90	125	5.
Depth To Water (ft)	1.44	1.45	1.45	1.45	1.45	1.45	1.45	1.45	1.45	
Time										
Temp. (C)										
Conduct. (µmhos/cm)										
DO (mg/l)										
pH (Std. Units)										
Eh (millivolts)										
Turb. (NTU)										
Flow (ml/min)										
Depth To Water (ft)										

Pump Type	Purge	Sample
Peristaltic Pump		
Submersible Pump		
Bladder Pump	X	X
Other: ___		

Description of Sampling Equipment and Flow Rate: YSI 600XLM, MP15 controller w/ CO_2 gas, solinst water level meter, Lamotte 2020

Analytical Parameter	Filtered (Y/N)	Preservation	Volume	Time Collected	Sample #	Case #
VOCs	N	HCl	2.4 mL VOA vials	1355	MW-5	

* Low flow rate due to small air meter pump.

K:\geosci\fieldforms\lowflowrecord.ppt

Signed: Allen Weiss

Rev: 1 Feb 2007

TRC

Low-flow Groundwater Sampling Data Record

Project:	Project No.:	Date/Time:	Sheet 1 of 1
5058	City of NB	4/7/10/1055	

TRC Personnel: A. Weiss

Well Identification: MW-7

WELL INTEGRITY

	YES	NO
Protect. Casing Secure	X	
Concrete Collar Intact	X	
PVC Stick-up Intact	X	
Well Cap Present	X	
Security Lock Present		X

Protective Casing Stick-up (from ground) _____ ft.

Riser Stick-up (from ground) _____ ft.

WELL DIAMETER: [X] 2 inch [ ] 4 inch [ ] 6 inch [ ] ____

WELL MATERIAL: [X] PVC [ ] SS [ ] ____

Well Depth 715.88 ft. [X] top of riser [ ] top of casing [ ] ____ [X] measured [ ] historical

Water Depth 7.5 ft.

LNAPL/DNAPL Depth = ____

Thickness =

LOW FLOW DATA

Depth of pump intake: 12'

Static water level after pump put into well 7.16

Initial purge Rate/ Water Level (100-400 ml/min):

Adjusted purge Rates/time/WL(record changes) started too high, decreased pressure as flow dropped.

Flow rate at time of sampling: 210 ml/min

PID SCREENING MEAS.

Background	0.0
Well Mouth	0.5

FIELD WATER QUALITY MEASUREMENTS (record at 3-5 minute intervals)

Time	1215	1220	1220	1230	1235	1240	1245	1250	1255	1257
Temp. (C)	13.71	9.65	9.68	9.57	9.68	9.74	9.77	9.94	9.93	9.91
Conduct. (µmhos/cm)	0.396	0.348	0.352	0.352	0.354	0.356	0.356	0.364	0.364	0.364
DO (mg/l)	4.04	1.06	1.02	1.00	0.98	0.99	0.99	0.95	0.92	0.90
pH (Std. Units)	5.88	5.75	5.78	5.78	5.79	5.81	5.81	5.88	5.87	5.87
Eh (millivolts)	185.7	261.2	249.4	246.6	243.4	241.6	241.0	229.9	229.2	230.1
Turb. (NTU)	12.6	3.01	1.12	1.30	1.27	1.18	1.24	0.74	0.79	0.68
Flow (ml/min)	150	375	320	210	200	200	200	210	210	200
Depth To Water (ft)	7.2	7.16	7.16	7.16	7.18	7.18	7.18	7.18	7.18	7.18

Time	1300	1303								
Temp. (C)	9.95									
Conduct. (µmhos/cm)	0.366									
DO (mg/l)	0.90									
pH (Std. Units)	5.89									
Eh (millivolts)	227.8									
Turb. (NTU)	0.72									
Flow (ml/min)	210									
Depth To Water (ft)	7.18									

STABLE

Pump Type

	Purge	Sample
Peristaltic Pump	X	X
Submersible Pump		
Bladder Pump	X	X
Other:		

Description of Sampling Equipment and Flow Rate: YSI 600XLM w/Display, MP15 controller w/CO_2 gas, Lamotte 2020, Solinst water level,

Analytical Parameter	Filtered (Y/N)	Preservation	Volume	Time Collected	Sample #	Case #
VOCs	N	HCl	2, 40mL VOA vials	1305	MW-7	

K:\geosci\fieldforms\lowflowrecord.ppt

Signed: Allen Weiss

Rev: 1 Feb 2007

TRC

Low-flow Groundwater Sampling Data Record

Project:	Project No.:	Date/Time:	Sheet 1 of 1
City of New Bedford	115058	04/07/10 1240	

TRC Personnel: J. Grundy

Well Identification: MW-11

WELL INTEGRITY

	YES	NO
Protect. Casing Secure	X	
Concrete Collar Intact	X	
PVC Stick-up Intact	X	
Well Cap Present	X	
Security Lock Present		X

Protective Casing Stick-up (from ground) N/A ft.

Riser Stick-up (from ground) N/A ft.

WELL DIAMETER: [X] 2 inch [ ] 4 inch [ ] 6 inch

WELL MATERIAL: [X] PVC [ ] SS [ ]

Well Depth 10.62 ft. [X] top of riser [ ] top of casing [X] measured [ ] historical

Water Depth 0.00 ft.

LNAPL/DNAPL Depth = N/A

Thickness = N/A

LOW FLOW DATA

Depth of pump intake: 8'

Static water level after pump put into well: over riser

Initial purge Rate/ Water Level (100-400 ml/min): 0.29' @ 350 ml/min

Adjusted purge Rates/time/WL(record changes): 154 ml/min, 0.19' (1257)

Flow rate at time of sampling: 166 ml/min

PID SCREENING MEAS.

Background	0.0
Well Mouth	0.0

FIELD WATER QUALITY MEASUREMENTS (record at 3-5 minute intervals)

Time	1243	1257	1303	1308	1312	1316	1319	1322	1325	
Temp. (C)	16.44	16.76	16.76	16.76	16.78	16.77	16.77	16.75	16.76	
Conduct. (µmhos/cm)	0.334	0.329	0.327	0.326	0.324	0.322	0.320	0.319	0.318	
DO (mg/l)	0.38	0.26	0.26	0.25	0.25	0.25	0.24	0.23	0.23	
pH (Std. Units)	6.17	6.03	6.01	6.00	6.00	6.00	5.99	5.98	5.98	
Eh (millivolts)	1.1	-17.6	-23.8	-37.2	-38.2	-36.6	-36.7	-35.7	-35.1	
Turb. (NTU)	~~47.7~~	22.9	16.8	12.8	13.4	11.5	10.33	11.1	10.92	
Flow (ml/min)	350	160	166	164	166	166	166	164	166	
Depth To Water (ft)	0.29	0.19	0.19	0.19	0.19	0.19	0.19	0.19	0.19	
Time										
Temp. (C)										
Conduct. (µmhos/cm)										
DO (mg/l)										
pH (Std. Units)										
Eh (millivolts)										
Turb. (NTU)										
Flow (ml/min)										
Depth To Water (ft)										

Pump Type	Purge	Sample
Peristaltic Pump		
Submersible Pump		
Bladder Pump	X	X
Other:		

Description of Sampling Equipment and Flow Rate: YSI 600XLM sonde, MP15 controller with CO_2 gas, Solinst water level meter, LaMotte 2020

Analytical Parameter	Filtered (Y/N)	Preservation	Volume	Time Collected	Sample #	Case #
VOCs	N	HCl	2x40 ml VOA vials	1333	MW-11	

K:\geosci\fieldforms\lowflowrecord.ppt

Signed: (for J.G.)

Rev: 1 Feb 2007

TRC

Low-flow Groundwater Sampling Data Record

Project:	Project No.:	Date/Time:	Sheet
City of NB	115058	4/9/10 0920	1 of 1

TRC Personnel: J. Grundy, A. Weiss

Well Identification: MW-18

WELL INTEGRITY

	YES	NO
Protect. Casing Secure	X	
Concrete Collar Intact	X	
PVC Stick-up Intact	X	
Well Cap Present	X	
Security Lock Present		X

Protective Casing Stick-up (from ground) NA ft.

Riser Stick-up (from ground) NA ft.

WELL DIAMETER: [X] 2 inch [ ] 4 inch [ ] 6 inch [ ]

WELL MATERIAL: [X] PVC [ ] SS [ ]

Well Depth 10.30 ft. [X] top of riser [ ] top of casing [ ] [X] measured [ ] historical

Water Depth 0.87 ft.

LNAPL/DNAPL Depth = —

Thickness = —

LOW FLOW DATA

Depth of pump intake: 6'

Static water level after pump put into well 0.82

Initial purge Rate/ Water Level (100-400 ml/min): 130 ml/min, ~~0.8~~ 0.98 ml/min

Adjusted purge Rates/time/WL(record changes)

Flow rate at time of sampling: 125 ml/min

PID SCREENING MEAS.

Background	
Well Mouth	0.0

FIELD WATER QUALITY MEASUREMENTS (record at 3-5 minute intervals)

Time	0926	0934	0939	0944	0949	0954	0959	1004	1009	1014
Temp. (C)	12.81	13.08	13.24	13.44	13.54	13.63	13.66	13.68	13.70	13.74
Conduct. (µmhos/cm)	0.381	0.380	0.381	0.383	0.385	0.386	0.386	0.386	0.385	0.384
DO (mg/l)	0.78	0.48	0.44	0.44	0.44	0.41	0.38	0.36	0.34	0.31
pH (Std. Units)	6.46	6.22	6.13	6.07	6.03	6.01	5.99	5.98	5.96	5.96
Eh (millivolts)	-46.1	-50.6	-49.6	-47.7	-49.0	-53.5	-54.5	-53.2	-53.6	-52.4
Turb. (NTU)	20.8	31.2	30.4	24.4	20.3	15.1	12.3	10.20	8.90	7.12
Flow (ml/min)	130	135	135	130	130	~~130~~ 125	130	130	125	125
Depth To Water (ft)	0.98	0.99	0.99	0.99	0.99	0.99	0.99	0.99	0.99	0.99
Time	1022	1025	1030	1033	1037	1041	1047	1052	1055	
Temp. (C)	13.74	13.73	13.73	13.73	13.73	13.73	13.77	13.80	13.84	
Conduct. (µmhos/cm)	0.382	0.382	0.381	0.380	0.379	0.378	0.377	0.376	0.376	
DO (mg/l)	0.29	0.29	0.28	0.28	0.27	0.26	0.26	0.25	0.24	
pH (Std. Units)	5.96	5.96	5.96	5.96	5.96	5.96	5.96	5.97	5.98	
Eh (millivolts)	-52.2	-53.4	-57.6	-61.0	-68.5	-83.2	-99.4	-93.4	-92.7	
Turb. (NTU)	6.58	6.17	6.01	5.80	5.51	5.91	5.76	5.75	5.68	
Flow (ml/min)	125	125	125	125	125	125	125	125	125	
Depth To Water (ft)	0.99	0.99	0.99	0.99	0.99	0.99	0.99	0.99	0.99	

Pump Type	Purge	Sample
Peristaltic Pump		
Submersible Pump		
Bladder Pump	X	X
Other:		

Description of Sampling Equipment and Flow Rate:

YSI 600XLM sonde w/ 650 MDS handset; MP15 Controller @ ~26 psi, 11/1 recharge/pump ratio using CO_2 gas; Solinst water level meter;

Analytical Parameter	Filtered (Y/N)	Preservation	Volume	Time Collected	Sample #	Case #
VOCs	N	HCl	2x 40ml VOA	1100	MW-18	

K:\geosci\fieldforms\lowflowrecord.ppt

Signed: James S. Grundy

Rev: 1 Feb 2007

TRC

Low-flow Groundwater Sampling Data Record

Project:	Project No.:	Date/Time:	Sheet 1 of 1
City of New Bedford		04/08/10 1130	

TRC Personnel: J. Grundy

Well Identification: MW-20

WELL INTEGRITY

	YES	NO
Protect. Casing Secure	X	
Concrete Collar Intact	X	
PVC Stick-up Intact	X	
Well Cap Present	X	
Security Lock Present		X

Protective Casing Stick-up (from ground): flush ft.

Riser Stick-up (from ground): — ft.

WELL DIAMETER: [X] 2 inch [ ] 4 inch [ ] 6 inch

WELL MATERIAL: [X] PVC [ ] SS [ ]

Well Depth 21.40 ft. [X] top of riser [ ] top of casing [X] measured [ ] historical

Water Depth 12.17 ft.

LNAPL/DNAPL Depth = N/A

Thickness = N/A

LOW FLOW DATA

Depth of pump intake: ~17 SS 9/22/10

Static water level after pump put into well: 12.10

Initial purge Rate/ Water Level (100-400 ml/min): 110 ml/min, 12.16 ft water level

Adjusted purge Rates/time/WL(record changes)

Flow rate at time of sampling: 115 ml/min

PID SCREENING MEAS.

Background	
Well Mouth	4.0

FIELD WATER QUALITY MEASUREMENTS (record at 3-5 minute intervals)

Time	1150	1155	1200	1205	1210	1215	1220	1225	1230	1235
Temp. (C)	15.44	15.42	15.43	15.55	15.58	15.57	15.59	15.64	15.66	15.70
Conduct. (µmhos/cm)	0.344	0.340	0.338	0.337	0.335	0.334	0.332	0.330	0.329	0.327
DO (mg/l)	1.08	0.94	0.74	1.66	2.33	1.92	1.77	1.44	1.19	1.01
pH (Std. Units)	5.54	5.48	5.40	5.35	5.31	5.30	5.29	5.28	5.28	5.30
Eh (millivolts)	-107.5	-107.2	-109.5	-110.6	-117.5	-98.0	-100.4	-95.0	-92.6	-91.7
Turb. (NTU)	17.4	27.8	36.2	38.2	25.6	21.5	20.4	17.8	15.4	13.0
Flow (ml/min)	118	115	125	118	115	120	120	120	118	115
Depth To Water (ft)	12.18	12.17	12.18	12.17	12.17	12.17	12.18	12.18	12.18	12.18

Time	1240	1245	1250	1255	1300	1305	1310	1315	1320	1325	1330	1335
Temp. (C)	15.76	15.93	15.81	15.81	15.80	15.89	15.86	15.76	15.67	15.59	15.59	15.4
Conduct. (µmhos/cm)	0.326	0.327	0.324	0.324	0.322	0.321	0.318	0.316	0.314	0.312	0.310	0.30
DO (mg/l)	0.88	0.79	0.70	0.64	0.58	0.52	0.48	0.45	0.44	0.42	0.39	0.38
pH (Std. Units)	5.30	5.30	5.31	5.32	5.33	5.33	5.34	5.34	5.34	5.35	5.35	5.34
Eh (millivolts)	-94.4	-85.0	-81.7	-79.4	-79.2	-76.6	-74.5	-73.4	-72.6	-72.4	-74.5	-75.2
Turb. (NTU)	11.5	12.9	10.03	9.02	8.56	6.92	6.59	6.28	5.63	5.22	5.40	4.78
Flow (ml/min)	115	110	113	115	115	115	115	115	115	115	115	115
Depth To Water (ft)	12.18	12.18	12.18	12.18	12.18	12.18	12.18	12.18	12.18	12.18	12.18	12.18

Pump Type	Purge	Sample
Peristaltic Pump		
Submersible Pump		
Bladder Pump	X	X
Other:		

Description of Sampling Equipment and Flow Rate:

YSI 600XLM Sonde w/ 650 MDS handset; MP15 Controller @ 1/1 recharge/pump ratio, ~25 psi; Solinst water level meter; LaMotte 2020 turbidity meter.

Analytical Parameter	Filtered (Y/N)	Preservation	Volume	Time Collected	Sample #	Case #
VOCs	N	HCl	2x40mL VOA	1345	MW-20	

K:\geosci\fieldforms\lowflowrecord.ppt

Signed: James D. Grundy

Rev: 1 Feb 2007

dr

TRC

Low-flow Groundwater Sampling Data Record

Project:	Project No.:	Date/Time:	Sheet 1 of 2
City of New Bedford	115058	09/08/10 0830	

TRC Personnel: J. Gandy

Well Identification: MW-21

WELL INTEGRITY

	YES	NO
Protect. Casing Secure	X	
Concrete Collar Intact	X	
PVC Stick-up Intact	X	
Well Cap Present	X	
Security Lock Present		X

Protective Casing Stick-up (from ground): ~~N/A~~ Flush ft.

Riser Stick-up (from ground): ~~Clad~~ ~~N/A~~ N/A ft.

WELL DIAMETER: [X] 2 inch [ ] 4 inch [ ] 6 inch

WELL MATERIAL: [X] PVC [ ] SS [ ] ___

Well Depth 19.37 ft. [X] top of riser [ ] top of casing [X] measured [ ] historical

Water Depth 8.42 ft.

LNAPL/DNAPL Depth = N/A

Thickness = N/A

LOW FLOW DATA

Depth of pump intake: 15'

Static water level after pump put into well 8.38 ft.

Initial purge Rate/ Water Level (100-400 ml/min): 125 ml/min, 8.52

Adjusted purge Rates/time/WL(record changes)

Flow rate at time of sampling: 125 ml/min

PID SCREENING MEAS.

Background	
Well Mouth	26.8

FIELD WATER QUALITY MEASUREMENTS (record at 3-5 minute intervals)

Time	0841	0849	0854	0858	0903	0908	0913	0918	0924	0929
Temp. (C)	15.20	15.09	14.89	14.78	14.92	14.94	14.96	14.88	14.98	14.96
Conduct. (µmhos/cm)	0.251	0.255	0.269	0.294	0.314	0.331	0.346	0.357	0.374	0.381
DO (mg/l)	50	3.16	2.52	2.37	2.72	2.56	2.45	2.37	2.34	2.32
pH (Std. Units)	Check YSI	6.37	6.15	6.01	5.91	5.86	5.81	5.78	5.76	5.74
Eh (millivolts)		-124.7	-128.0	-127.5	-132.1	-132.1	-132.5	-134.5	-137.9	-139.0
Turb. (NTU)		71.6	71.5	61.7	55.7	52.7	48.5	44.1	37.3	33.4
Flow (ml/min)	Recharge	123	123	123	125	125	125	125	125	125
Depth To Water (ft)		8.52	8.52	8.53	8.53	8.52	8.52	8.53	8.53	8.53
Time	0934	0939	0944	0949	0954	1000	1005	1010	1015	1020
Temp. (C)	14.84	14.86	14.85	14.76	14.73	14.73	14.83	14.89	14.83	14.89
Conduct. (µmhos/cm)	0.386	0.391	0.396	0.396	0.402	0.402	0.408	0.413	0.416	0.414
DO (mg/l)	2.30	2.29	2.25	2.25	2.26	2.24	2.26	2.28	2.28	2.28
pH (Std. Units)	5.72	5.70	5.68	5.67	5.65	5.65	5.64	5.64	5.63	5.63
Eh (millivolts)	-143.5	-146.3	-149.1	-151.0	-154.0	-156.1	-156.0	-154.6	-155.0	-156.8
Turb. (NTU)	30.8	28.6	25.7	24.2	23.0	21.7	19.5	18.7	18.6	19.1
Flow (ml/min)	125	125	125	125	125	125	125	125	125	125
Depth To Water (ft)	8.53	8.53	8.53	8.53	8.53	8.53	8.53	8.53	8.53	8.53

- Drained flow through cell and DO returned to normal reading.

Pump Type	Purge	Sample
Peristaltic Pump		
Submersible Pump		
Bladder Pump	X	X
Other:		

Description of Sampling Equipment and Flow Rate:

YSI 600XLM Sonde w/ 650 MDS Display; MP15 Controller @ 11/1 recharge/pump rate, ~26 psi; Solinst water level meter, LaMotte 2020 turbidity meter.

Analytical Parameter	Filtered (Y/N)	Preservation	Volume	Time Collected	Sample #	Case #
VOCs	N	HCl	2x40mL VOA	1050	MW-21	

K:\geosci\fieldforms\lowflowrecord.ppt

Signed: James A. Gandy

Rev: 1 Feb 2007

TRC

Low-flow Groundwater Sampling Data Record

Project:	Project No.:	Date/Time:	Sheet 2 of 2
City of New Bedford	115058	04/08/10 0830	

TRC Personnel: J. Grundy

Well Identification: MW-21

WELL INTEGRITY

	YES	NO
Protect. Casing Secure	X	
Concrete Collar Intact	X	
PVC Stick-up Intact	X	
Well Cap Present	X	
Security Lock Present		X

Protective Casing Stick-up (from ground): flush ft.

Riser Stick-up (from ground): — ft.

WELL DIAMETER: [X] 2 inch [ ] 4 inch [ ] 6 inch [ ]

WELL MATERIAL: [X] PVC [ ] SS [ ] ___

Well Depth 19.37 ft. [X] top of riser [ ] top of casing [ ] [ ] [X] measured [ ] historical

Water Depth 8.42 ft.

LNAPL/DNAPL Depth = N/A

Thickness = N/A

LOW FLOW DATA

Depth of pump intake: 15'

Static water level after pump put into well: 8.38 ft

Initial purge Rate/ Water Level (100-400 ml/min): 125 ml/min, 8.52 ft water level

Adjusted purge Rates/time/WL(record changes)

Flow rate at time of sampling: 125 ml/min

PID SCREENING MEAS.

Background	
Well Mouth	

FIELD WATER QUALITY MEASUREMENTS (record at 3-5 minute intervals)

Time	1025	1030	1035	1040	1045					
Temp. (C)	15.01	15.13	15.14	15.20	15.24					
Conduct. (µmhos/cm)	0.412	0.419	0.422	0.423	0.24					
DO (mg/l)	2.24	2.27	2.28	2.30	2.30					
pH (Std. Units)	5.63	5.63	5.63	5.64	5.64					
Eh (millivolts)	-153.7	-153.6	-146.8	-145.4	-145.5					
Turb. (NTU)	18.0	16.8	18.4	18.3	17.5					
Flow (ml/min)	125	125	125	125	125					
Depth To Water (ft)	8.53	8.53	8.53	8.53	8.53					
Time										
Temp. (C)										
Conduct. (µmhos/cm)										
DO (mg/l)										
pH (Std. Units)										
Eh (millivolts)										
Turb. (NTU)										
Flow (ml/min)										
Depth To Water (ft)										

Pump Type	Purge	Sample
Peristaltic Pump	[ ]	[ ]
Submersible Pump	[ ]	[ ]
Bladder Pump	[X]	[X]
Other: ___	[ ]	[ ]

Description of Sampling Equipment and Flow Rate:

YSI 600XLM Sonde w/ 650 MDS Display; MP15 controller

@ 1:1 recharge/pump ratio, ~26psi w/ CO_2; Solinst water level meter;

LaMotte 2020 turbidity meter

Analytical Parameter	Filtered (Y/N)	Preservation	Volume	Time Collected	Sample #	Case #
VOCs	N	HCl	2x 40mL VOA	1050	MW-21	

K:\geosci\fieldforms\lowflowrecord.ppt

Signed: James J. Grundy

Rev: 1 Feb 2007

TRC

Low-flow Groundwater Sampling Data Record

Project:	Project No.:	Date/Time:	Sheet 1 of 1
City of New Bedford	115088	4/8/10 0800	

TRC Personnel: A. Weiss

Well Identification: MW-22

WELL INTEGRITY

	YES	NO
Protect. Casing Secure	X	
Concrete Collar Intact	X	
PVC Stick-up Intact	X	
Well Cap Present	X	
Security Lock Present		X

Protective Casing Stick-up (from ground): NA ft.

Riser Stick-up (from ground): NA ft.

WELL DIAMETER: [X] 2 inch [ ] 4 inch [ ] 6 inch

WELL MATERIAL: [X] PVC [ ] SS [ ] ___

Well Depth 13.48 ft. [X] top of riser [ ] top of casing [X] measured [ ] historical

Water Depth 6.51 ft.

LNAPL/DNAPL Depth = ___ Thickness = ___

LOW FLOW DATA

Depth of pump intake: 8'

Static water level after pump put into well: 6.48

Initial purge Rate/ Water Level (100-400 ml/min): 200

Adjusted purge Rates/time/WL(record changes): started as low as possible.

Flow rate at time of sampling: 180 ml/min

PID SCREENING MEAS.

Background	
Well Mouth	8.4

FIELD WATER QUALITY MEASUREMENTS (record at 3-5 minute intervals)

Time	0810	0820	0825	0830	0835	0840	0845	0850	0855	0900
Temp. (C)		11.70	10.83	10.65	10.64	10.60	10.55	10.55	10.53	10.53
Conduct. (µmhos/cm)		1.086	1.009	0.995	0.990	0.990	0.991	0.991	0.993	0.995
DO (mg/l)		1.26	1.36	1.12	1.06	1.06	1.06	1.04	1.02	1.02
pH (Std. Units)		6.62	6.65	6.62	6.62	6.61	6.61	6.60	6.60	6.60
Eh (millivolts)		-69.2	-79.4	-79.1	-80.7	-84.8	-89.2	-87.5	-88.1	-89.3
Turb. (NTU)		41.4	18.8	~~170~~ 12.6	11.8	10.38	10.67	9.40	9.79	9.63
Flow (ml/min)		~~6.5~~ 200	185	170	155	180	175	180	180	180
Depth To Water (ft)		6.50	6.50	6.50	6.50	6.50	6.50	6.50	6.50	6.51

Turbidity very high allowing flow through to clear for 60 min

Time	0905	0910	0915	0920
Temp. (C)	10.60	10.57	10.53	10.56
Conduct. (µmhos/cm)	0.996	1.002	1.001	0.999
DO (mg/l)	1.02	1.01	0.99	1.02
pH (Std. Units)	6.59	6.56	6.55	6.55
Eh (millivolts)	-86.7	-83.8	-82.6	-79.0
Turb. (NTU)	9.73	10.04	9.22	9.51
Flow (ml/min)	180	180	195	180
Depth To Water (ft)	6.51	6.51	6.50	6.50

Turbidity remaining around 10 and stable. No sign of clearing will sample.

Pump Type	Purge	Sample
Peristaltic Pump		
Submersible Pump		
Bladder Pump	X	X
Other: ___		

Description of Sampling Equipment and Flow Rate: YSI 600XL, Solinst water level, MP15 controller w/ CO_2 gas, Lamotte 2020

Analytical Parameter	Filtered (Y/N)	Preservation	Volume	Time Collected	Sample #	Case #
VOCs	N	HCl	2, 40mL VOA Vials	0925	MW-22	

* Also collected DUP MW-122 @ 0825

Signed: Allison Weiss

3/5 115 24/5 120 2/5 110 4/29 5/145 26/5 130

TRC

Low-flow Groundwater Sampling Data Record

Project:	Project No.:	Date/Time:	Sheet 1 of 1
City of NB	115058	4/8/10 940	

TRC Personnel: A. Weiss

Well Identification: MW-23

WELL INTEGRITY

	YES	NO
Protect. Casing Secure	X	
Concrete Collar Intact	X	
PVC Stick-up Intact	X	
Well Cap Present	X	
Security Lock Present		X

Protective Casing Stick-up (from ground) NA ft.

Riser Stick-up (from ground) NA ft.

WELL DIAMETER: X 2 inch; 4 inch; 6 inch

WELL MATERIAL: X PVC; SS

Well Depth 11.45 ft. X top of riser; top of casing; X measured; historical

Water Depth 5.27 ft.

LNAPL/DNAPL Depth =

Thickness =

LOW FLOW DATA

Depth of pump intake: 7'

Static water level after pump put into well ~~5.3~~ 2.26'

Initial purge Rate/ Water Level (100-400 ml/min): 115

Adjusted purge Rates/time/WL(record changes) Keeping flow rate low. Fills vials to quickly any higher.

Flow rate at time of sampling: 125 ml/min

PID SCREENING MEAS.

Background	
Well Mouth	4.0

FIELD WATER QUALITY MEASUREMENTS (record at 3-5 minute intervals)

Time	1005	1010	1015	1020	1025	1030	1035	1040	1045	1050		
Temp. (C)	12.87	11.89	Turbidity very high, will allow to pump until clearing	Drained flow through cell	10.77	10.88	10.85	10.95	10.93	10.87		
Conduct. (µmhos/cm)	0.722	0.682			0.635	0.640	0.649	0.654	0.658	0.661		
DO (mg/l)	2.74	1.55			1.18	1.14	1.16	1.15	1.16	1.21		
pH (Std. Units)	6.47	6.42			6.24	6.24	6.21	6.20	6.18	6.12		
Eh (millivolts)	-35.5	-32.9			-10.8	-16.0	-17.1	-18.4	-17.5	-10.3		
Turb. (NTU)	212	319		96	103.2	81.5	70.1	66.5	58.2	58.4		
Flow (ml/min)	115	119		Before cell	125	125	125	125	110	120		
Depth To Water (ft)	5.3	5.3			5.3	5.29	5.29	5.29	5.29	5.29		
Time	1055	1100	1105	1110	1115	1120	1125	1130	1135	1145	1155	1205
Temp. (C)	10.79	10.77	10.78	10.86	10.83	10.82	10.76	10.73	10.76	10.77	10.89	10.84
Conduct. (µmhos/cm)	0.664	0.664	0.666	0.667	0.668	0.669	0.670	0.670	0.671	0.673	0.675	0.675
DO (mg/l)	1.18	1.18	1.19	1.20	1.19	1.20	1.20	1.22	1.20	1.17	1.12	1.13
pH (Std. Units)	6.13	6.12	6.14	6.13	6.14	6.15	6.14	6.14	6.16	6.21	6.25	6.25
Eh (millivolts)	-13.6	-12.5	-14.2	-13.4	-15.9	-14.4	-14.4	-14.5	-16.3	-15.9	-20.7	-21.2
Turb. (NTU)	54.3	55.0	50.3	46.2	42.1	38.1	35.7	35.6	23.7	17.5	12.3	11.4
Flow (ml/min)	120	120	110	125	120	130	125	130	145	130	125	125
Depth To Water (ft)	5.29	5.29	5.29	5.29	5.29	5.29	5.29	5.29	5.29	5.3	5.3	5.3

Pump Type

	Purge	Sample
Peristaltic Pump		
Submersible Pump		
Bladder Pump	X	X
Other:		

Description of Sampling Equipment and Flow Rate: YSI 600XLM, Solinst water level meter, LamoHe 2020, MP15 controller w/ CO_2 gas.

Analytical Parameter	Filtered (Y/N)	Preservation	Volume	Time Collected	Sample #	Case #
VOCs	N	HCl	2,40mL	1210	MW-23	

*Took last few readings every 10 min. only waiting on turbidity and purged for 2 hours w/o getting stable or below 5 NTUs.

K:\geosci\fieldforms\lowflowrecord.ppt

Signed: Allison Weiss

Rev: 1 Feb 2007

TRC

Low-flow Groundwater Sampling Data Record

Project:	Project No.:	Date/Time:	Sheet 1 of 1
City of NB	115058	4/8/10	

TRC Personnel: J. Grundy + A. Weiss

Well Identification: MW-24

WELL INTEGRITY

	YES	NO
Protect. Casing Secure	X	
Concrete Collar Intact	X	
PVC Stick-up Intact	X	
Well Cap Present	X	
Security Lock Present		X

Protective Casing Stick-up (from ground) _____ ft.

Riser Stick-up (from ground) _____ ft.

WELL DIAMETER: [X] 2 inch [ ] 4 inch [ ] 6 inch

WELL MATERIAL: [X] PVC [ ] SS [ ]

Well Depth 13.6 ft. [X] top of riser [ ] top of casing [ ] _____ [X] measured [ ] historical

Water Depth 5.38 ft. LNAPL/DNAPL Depth = — Thickness =

LOW FLOW DATA

Depth of pump intake: 9'

Static water level after pump put into well 5.37

Initial purge Rate/ Water Level (100-400 ml/min): 150 ml/min, 5.38 ft

Adjusted purge Rates/time/WL(record changes)

Flow rate at time of sampling:

PID SCREENING MEAS.

Background	
Well Mouth	0.0

FIELD WATER QUALITY MEASUREMENTS (record at 3-5 minute intervals)

Time	1435	1440		1505	1510	1515	1520	1525	1530	1535
Temp. (C)	11.69	10.83	monitoring turbidity until continued when settled	10.24	10.20	10.17	10.09	10.06	10.13	10.00
Conduct. (µmhos/cm)	0.792	0.778		0.757	0.756	0.753	0.750	0.749	0.747	0.746
DO (mg/l)	1.04	0.59		0.30	0.26	0.26	0.28	0.23	0.48	0.26
pH (Std. Units)	5.85	5.77		5.60	5.60	5.60	5.60	5.62	5.67	5.72
Eh (millivolts)	-51.0	-39.9		-50.6	-54.6	-57.5	-56.0	-62.1	-69.1	-60.8
Turb. (NTU)	290	182		55.0	51.5	47.1	44.3	33.3	25.5	17.4
Flow (ml/min)	150	155		165	165	175	175	175	170	170
Depth To Water (ft)	5.38	5.38		5.38	5.38	5.38	5.38	5.38	5.38	5.38

Time	1540	1545	1550	1555	1600	1605	1610	1615	1620	1625	1630	1635
Temp. (C)	9.99	9.88	9.91	9.93	10.04	10.04	10.07	10.00	10.00	9.96	9.91	9.87
Conduct. (µmhos/cm)	0.744	0.742	0.741	0.742	0.742	0.742	0.741	0.739	0.739	0.737	0.735	0.735
DO (mg/l)	0.21	0.26	0.27	0.20	0.20	0.29	0.26	0.20	0.21	0.18	0.17	0.19
pH (Std. Units)	5.76	5.80	5.82	5.84	5.86	5.87	5.88	5.89	5.90	5.91	5.90	5.91
Eh (millivolts)	-74.0	-77.6	-79.2	-80.6	-81.6	-83.1	-84.2	-86.7	-86.4	-86.9	-87.4	-87.7
Turb. (NTU)	17.2	14.5	11.9	10.68	13.6	11.8	9.90	11.5	10.05	9.52	8.81	9.26
Flow (ml/min)	170	170	170	170	170	175	175	175	175	175	170	
Depth To Water (ft)	5.38	5.38	5.38	5.38	5.38	5.38	5.38	5.38	5.38	5.38	5.38	

Pump Type	Purge	Sample
Peristaltic Pump		
Submersible Pump		
Bladder Pump	X	X
Other: _____		

Description of Sampling Equipment and Flow Rate: YSI 600XL, LaMotte 2020, Solinst water level meter, MP15 controller w/ CO_2 gas.

Analytical Parameter	Filtered (Y/N)	Preservation	Volume	Time Collected	Sample #	Case #
VOCs	N	HCl	8 10,40mL VOA vials	1435	MW-24 collected MS/MSD here	

K:\geosci\fieldforms\lowflowrecord.ppt

Signed: Allen Weiss

Rev: 1 Feb 2007

Field Instrument Calibration Log

TRC

Date: 4/7/2010 Site Name: City of New Bedford

Water Quality Instrument Type / ID: Set up #1 Display 01K1078 / YSI 02B0815 Set up #2 Display 00L1207 / YSI 05H2025

Turbidity Instrument Type / ID: LaMOTE 2020 / SEE Below

Date of Last Temperature Probe Check:

Dissolved Oxygen (DO)

	Time	Barometric Pressure (mm Hg)	Temperature (° Celsius)	100% Saturation Calibration (On Instrument)	Actual 100% Saturation Calibration (Refer to Attachment A)	Oxygen Solubility at Indicated Pressure (mg/L) (On Instrument)	Actual Oxygen Solubility at Indicated Pressure (mg/L) (Refer to Attachment B)	Zero DO Check (mg/L)	Comments	Initials
1	0715	750.8	12.30	98.8	99%	9.88	10.36	0.19	Recall to	AW
2	0720	750.9	13.35	98.5	99%	9.8	10.36	0.11	99%	AW
									solubility	

pH

	Time	Solution Temperature (° Celsius)	pH 7	pH 4	pH 10	pH 7 Check	Comments	Initials
1	0726	14.81	7.00	4.00	10.0	6.99		AW
2	0722	14.96	6.99	4.00	9.94	7.24	Recalibrated pH and got 7.01	AW
							on check	

Specific Conductance

	Time	Specific Conductance Reading (umhos/cm3)	Comments	Initials
1	0730	1.413	Read 1.399 befor cal	AW
2	0735	1.414	Read 1.404 before cal	AW

Oxidation Reduction Potential (ORP)

	Time	Solution Temperature (° Celsius)	ORP Reading (mV) (Refer to Attachment C)	Actual ORP Reading (mV) (On Instrument)	Comments	Initials
1	0735	14.02	245.3	245.4		AW
2	0737	14.91	245.3	245.5		

Turbidity

Time	Zero Standard	Standard #1 (1 NTUs)	Standard #1 (10 NTUs)	Comments	Initials
0732		1.00	10.00	0.98 → 1.00 / 9.92 → 10.00	JG
0736		1.00	10.00	0.96 → 1.00 / 9.98 → 10.00	JG

ID
3245-1902
5916-2405

Calibration Fluid ID / Expiration Date:

Zero DO: 45251616

Specific Conductance: 7478 / 10-21-2010

pH 4: 29106095 / 10-2011

ph 7: 29101105 / 9-2011

pH 10: 10806040 / 12-2010

ORP: 1885 / 9-2014

Zero Turbidity:

Turbidity Std. # 1:

Turbidity Std. #2:

Signed Allison Weiss

L2008-213

Field Instrument Calibration Log

TRC

Date: 4/8/2010 Site Name: City of New Bedford

Water Quality Instrument Type / ID: Setup #1: Display 01K1078 / YSI 02B0815 / Set up #2: Display 00L1207 / YSI 05H2025

Turbidity Instrument Type / ID: Lamotte 2020 / Seebelow

Date of Last Temperature Probe Check: _____

Dissolved Oxygen (DO)

	Time	Barometric Pressure (mm Hg)	Temperature (° Celsius)	100% Saturation Calibration (On Instrument)	Actual 100% Saturation Calibration (Refer to Attachment A)	Oxygen Solubility at Indicated Pressure (mg/L) (On Instrument)	Actual Oxygen Solubility at Indicated Pressure (mg/L) (Refer to Attachment B)	Zero DO Check (mg/L)	Comments	Initials
#1	0705	754.9	20.94	99.3	99%	8.50	8.82	0.97	Recal	AW
#2	0708	753.5	20.92	99.2	99%	8.37	8.82	0.88	to 100% sol	AW

pH

	Time	Solution Temperature (° Celsius)	pH 7	pH 4	pH 10	pH 7 Check	Comments	Initials
#1	0715	23.28	6.99	3.99	10.0	7.00		AW
#2	0713	23.18	7.00	3.99	AW 3. 9.97	7.21	Recalibrated and read 7.00	AW

Specific Conductance

	Time	Specific Conductance Reading (umhos/cm3)	Comments	Initials
#1	0721	1.413	1.406 before Cal	AW
#2	0724	1.414	1.419 before Cal	AW

Oxidation Reduction Potential (ORP)

	Time	Solution Temperature (° Celsius)	ORP Reading (mV) (Refer to Attachment C)	Actual ORP Reading (mV) (On Instrument)	Comments	Initials
#1	0724	23.3	233.6	233.7		AW
#2	0727	23.3	233.6	233.5		

Turbidity

	Time	Zero Standard	Standard #1 (1 NTUs)	Standard #1 (10 NTUs)	Comments	Initials
#1	0724		1.00	10.0	0.96 → 1.00 / 9.92 → 10.0	JG
#2	0728		1.00	10.0	0.94 → 1.00 / 9.96 → 10.0	JG

ID
3245-1902
5916-2405

Calibration Fluid ID / Expiration Date:

Zero DO: 452516016

Specific Conductance: 7478 / 10-21-2010

pH 4: 29101095 / 10-2010

ph 7: 2910105 / 9-2011

pH 10: 108066640 / 12-2010

ORP: 1885 / 9-2014

Zero Turbidity: _____

Turbidity Std. # 1: _____

Turbidity Std. #2: _____

Signed: Allison Wells

L2008-213

Field Instrument Calibration Log

TRC

Date: 4/9/2010

Site Name: City of New Bedford - NBHS

Water Quality Instrument Type / ID: Set up #1 01K1078 (Dispic) / 02B0815 (YSI) Set up #2 - 00L1207 (Dispic) / 05H2025 (YSI)

Turbidity Instrument Type / ID: Lamotte 2020 / See below

Date of Last Temperature Probe Check:

Dissolved Oxygen (DO)

	Time	Barometric Pressure (mm Hg)	Temperature (° Celsius)	100% Saturation Calibration (On Instrument)	Actual 100% Saturation Calibration (Refer to Attachment A)	Oxygen Solubility at Indicated Pressure (mg/L) (On Instrument)	Actual Oxygen Solubility at Indicated Pressure (mg/L) (Refer to Attachment B)	Zero DO Check (mg/L)	Comments	Initials
1	0700	753.7	23.12	99.2	99%	8.37	8.49	1.32		AW
2	0702	752.6	23.76	99.0	99%	8.06	8.33	0.49		AW

pH

	Time	Solution Temperature (° Celsius)	pH 7	pH 4	pH 10	pH 7 Check	Comments	Initials
1	0710	24.61	7.00	4.00	10.00	6.96		AW
2	0706	25.31	7.00	3.97	10.05	6.96		AW

Specific Conductance

	Time	Specific Conductance Reading (umhos/cm3)	Comments	Initials
1	0714	1.413	1.403 → 1.413	AW
2	0720	1.413	1.393 → 1.413	AW

Oxidation Reduction Potential (ORP)

	Time	Solution Temperature (° Celsius)	ORP Reading (mV) (Refer to Attachment C)	Actual ORP Reading (mV) (On Instrument)	Comments	Initials
1	0716	25.4	231.0	231.0		AW
2	0723	25.6	231.0	231.0		AW

Turbidity

Time	Zero Standard	Standard #1 (1 NTUs)	Standard #1 (10 NTUs)	Comments	Initials	ID
0730		1.00	10.0	0.94 → 1.00 / 9.96 → 10.0	JG	3245-1902
0735		1.00	10.0	0.93 → 1.00 / 9.93 → 10.0	JG	5916-2405

Calibration Fluid ID / Expiration Date:

Zero DO: 45251616

Specific Conductance: 7478 / 10-21-2010

pH 4: 2910695 / 10-2011

ph 7: 2910105 / 9-2011

pH 10: 10806640 / 12-2010

ORP: 1885 / 9-2014

Zero Turbidity:

Turbidity Std. # 1:

Turbidity Std. #2:

Signed: Allen Wass

L2008-213

APPENDIX H

SANITARY LINE CAMERA INVESTIGATION

Appendix G
Sanitary Line Camera Investigation

New Bedford High School
MH-2 through MH-5 Tape Review Notes

Counter (ft)	Comment
DVD Chapter 1 L1 SP - MH-2 to MH-3	
5	Counter starts, water flowing US to DS with the camera, pipe is about 1/4 full of water
6	Joint
11.5	Joint
16	Joint
22	Joint
22.2	Camera flipped over and was restated at 28'
28	Camera restarts
31.5	Joint
37	Joint with white substance on the bottom sides of the pipe (may be mineral deposits), pipe begins to sag and is now about 1/3 full of water
42	Joint with white substance on the bottom sides of the pipe (may be mineral deposits)
47	Joint with white substance on the bottom sides of the pipe (may be mineral deposits)
50	Camera begins to submerge, and is angled upward to view the crown of the pipe
52	Joint and then camera fully submerges, sag increases as pipe is now 1/2 full of water
51	Camera restarts, but is still partially submerged
57	Joint
59-65	White mineral deposits on the crown of the pipe
64.5	Camera fully submerges
71	Televising stops while submerged
DVD Chapter 2 L1 SP - MH-3 to MH-2	
5	Counter starts, water flowing DS to US against the camera, pipe is about 1/3 full of water
5.1	Joint with angular crack from joint 1/2 way up the right side of the pipe, down to the bottom of the pipe
6	Pipe sags, now 1/2 full of water and camera fully submerges
12.4	Televising stops while submerged
DVD Chapter 3 L1 SP - MH-3 to MH-4	
5	Counter starts, water flowing US to DS with the camera, pipe is about 1/8 full of water with fast flow
6.5	Joint, bottom is slightly offset causing flow to jump upward
11.5	Joint
16.5	Joint
21.5	Joint, bottom is slightly offset causing flow to jump upward
24.4	Joint

Appendix G
Sanitary Line Camera Investigation

Counter (ft)	Comment
25	Pipe begins to sags, now 1/4 full of water
26.5	Joint
31.5	Joint
36.5	Joint
41.5	Joint
46.5	Joint
48	Sag in pipe ends, now 1/8 full of water
51.5	Joint
56.5	Joint
61.5	Joint
66.5	Joint
71.5	Joint
76.5	Joint
81.5	Joint
86.5	Joint
91.5	Joint
96.5	Joint
101.5	Joint
106.5	Joint
112.5	Joint
117.5	Joint
122.5	Joint
127.5	Joint
132.5	Joint
137.5	Joint
142.5	Joint
144	Pipe begins to sags, now 1/4 full of water
147.5	Joint
152.5	Joint
157.5	Joint
162.5	Joint
165	Pipe sags more, now 1/2 full of water, camera fully submerges
171	Pipe sags less, now 1/4 full of water, camera comes out of water

Appendix G
Sanitary Line Camera Investigation

Counter (ft)	Comment
172.5	Joint
177.5	Inside MH-4
179.9	Televising stops
DVD Chapter 4	L1 SP - MH-4 to MH-5
12.2	Counter starts, water flowing US to DS with the camera, pipe is about 1/4 full of water with fast flow
12.2	Multiple horizontal cracks on the crown & sides of the 1st section of pipe, counter not moving, pipe begins to sag at 2nd section of pipe, now about 1/3 full of water
5	Counter resets and camera is submerged
9	Pipe sags less, camera comes out of water
13	Joint, pipe drops downward at this joint, flow increases, pipe is about 1/8 full of water
18	Joint, pipe drops downward at this joint
23	Joint
28	Joint
33	Joint
38	Joint
43	Joint
48	Joint
53	Joint
58	Joint
63	Joint
68	Joint
73	Joint
78	Joint
84	Joint
89	Joint
94	Joint
99	Joint
104	Joint
109	Joint
114	Joint
119	Joint, pipe begins to drop downward, flow increases
124	Joint
129	Joint
134	Joint

Appendix G
Sanitary Line Camera Investigation

Counter (ft)	Comment
139	Joint
144	Joint
149	Joint
154	Joint
159	Joint
164	Joint
169	Joint
174	Joint
179	Joint
184	Joint
189	Joint
194	Joint
199	Joint, pipe begins to sags, now 1/4 full of water
203	Pipe sags more, now 1/2 full of water, camera fully submerges
210	Recording stops and restarts at 222 with camera out of water
225	Joint, counter sticks and doesn't count the next pipe section (misses 5' of pipe run)
230	Joint
235	Joint
240	Joint
245	Joint
250	Joint
255	Joint
260	Joint
265	Joint
270	Joint
275	Joint
281	Inside MH-5
281.6	Televising stops

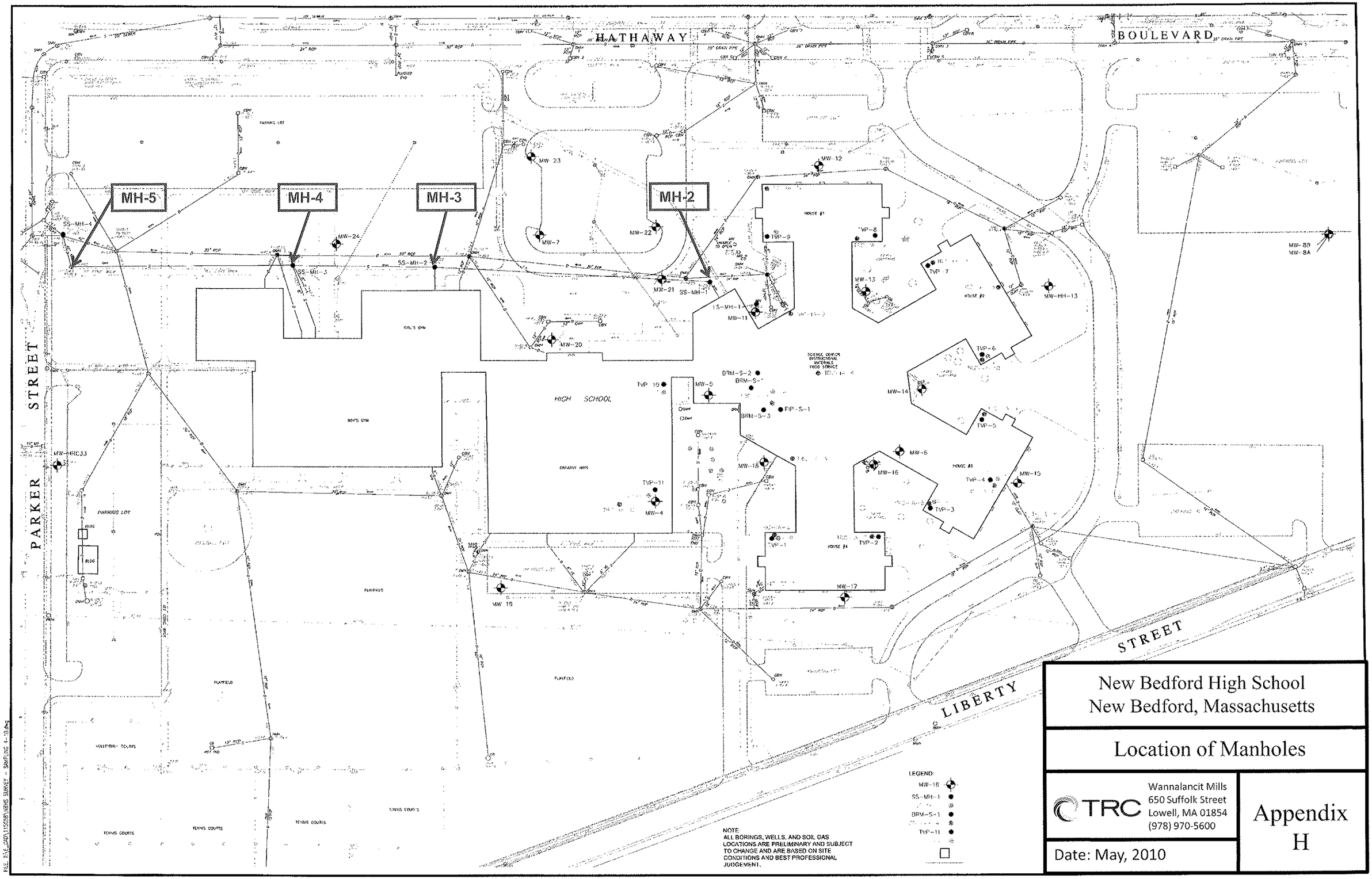

New Bedford High School
New Bedford, Massachusetts

Location of Manholes

TRC
Wannalancit Mills
650 Suffolk Street
Lowell, MA 01854
(978) 970-5600

Date: May, 2010

Appendix H

APPENDIX I

COPY OF ENVIRONMENTAL FACT SHEET – MARCH 2010

ENVIRONMENTAL FACT SHEET

CITY OF NEW BEDFORD'S INVESTIGATION OF GROUNDWATER SEEPS IN THE BASEMENT OF NEW BEDFORD HIGH SCHOOL

CITY OF NEW BEDFORD/TRC, MARCH 2010

The City's environmental consultant (TRC Environmental Corporation) is investigating groundwater (water located beneath the ground in spaces in the soil) which enters, or "seeps" into New Bedford High School basement rooms used by maintenance staff through small cracks in the foundation. This fact sheet describes TRC's investigation, its implications for building occupants, and the next steps in the investigation. More details about TRC's investigation, including all chemical concentration data, are provided in the *Immediate Response Action Plan* for RTN 4-22409, which will be posted on the City's website.

WHAT INVESTIGATION HAS BEEN COMPLETED TO DATE?

What are volatile organic compounds, or VOCs?
Volatile organic compounds (VOCs) are emitted as gases from certain solids or liquids. VOCs include a variety of chemicals. VOCs are emitted by a wide array of products numbering in the thousands. Examples include: paints and lacquers, paint strippers, cleaning supplies, pesticides, building materials and furnishings, office equipment such as copiers and printers, correction fluids and carbonless copy paper, graphics and craft materials including glues and adhesives, permanent markers, and photographic solutions. Organic chemicals are widely used as ingredients in household products. Paints, varnishes, and wax all contain organic solvents, as do many cleaning, disinfecting, cosmetic, degreasing, and hobby products. Fuels are made up of organic chemicals. All of these products can release organic compounds while you are using them, and, to some degree, when they are stored.

January 2010. TRC collected (1) groundwater samples from monitoring wells under and near the high school, and (2) seep water samples from the basement of the high school. Analytical results for these samples suggest the potential for chlorinated volatile organic compounds (VOCs) to be present in indoor air in the building. Therefore, TRC conducted indoor air sampling on an expedited basis from several locations within the high school near the groundwater seep and in other areas of the building, including classrooms. The City reported the results of this sampling in a February 2010 Fact Sheet posted on its website. TRC detected chlorinated VOCs in the school's indoor air. Some of the VOCs in indoor air might come from groundwater while others might be associated with other sources, such as cleaning products and vehicle exhaust. TRC's preliminary risk assessment of these data indicated that there is no significant risk to the health of building occupants based on criteria established by the Massachusetts Department of Environmental Protection (MassDEP).

February 2010. Despite the finding of no significant risk, further assessment of the presence of detectable concentrations of VOCs in indoor air will be conducted. Therefore, TRC continued its investigation during the February school vacation period by:

- → Sampling 16 groundwater monitoring wells, 10 storm water sewer manholes, and 5 sanitary sewer manholes
- → Sampling soil gas from beneath the slab of the building at 11 locations, concentrating on classroom locations (Collecting soil gas beneath the slab provides some indication of whether VOCs beneath the building are migrating as vapors to indoor areas of the high school)
- → Conducting an inventory of chemicals used in the building
- → Completing an inventory of first floor drains and cracks in the floor of the A and B blocks to identify where steps can be taken to prevent vapor migration into the building
- → Checking for proper ventilation system performance

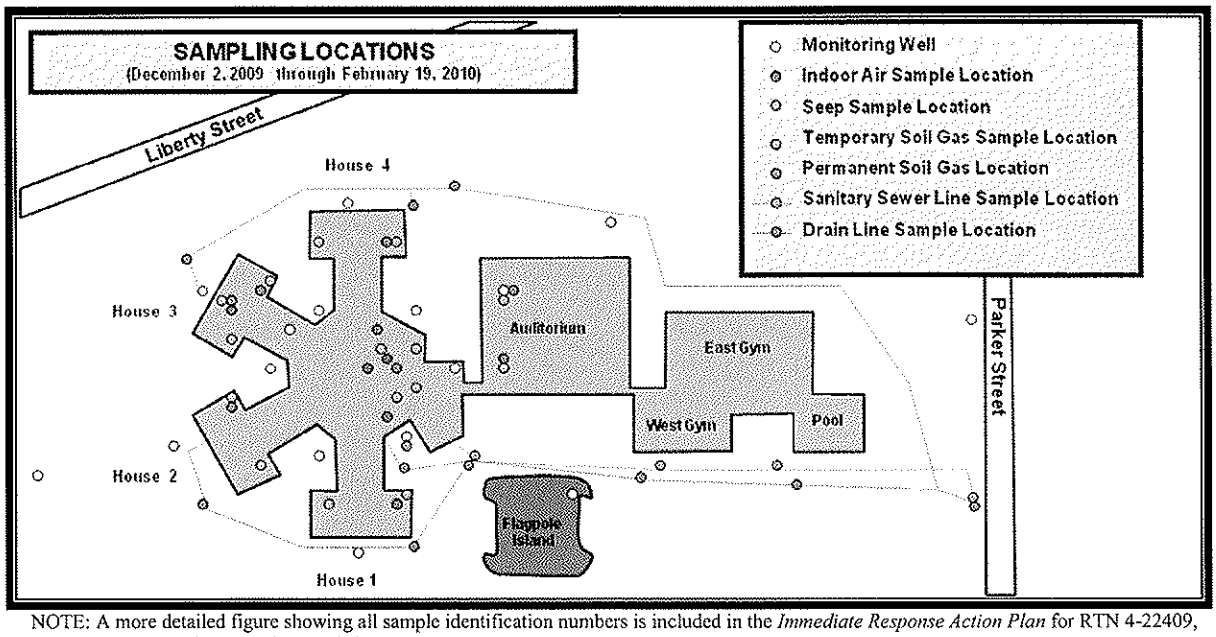

NOTE: A more detailed figure showing all sample identification numbers is included in the *Immediate Response Action Plan* for RTN 4-22409, which will be posted on the City's website.

IS IT SAFE FOR PEOPLE TO OCCUPY THE HIGH SCHOOL?

Yes, it is safe to occupy the high school, including rooms where samples were collected, based on TRC's assessment of indoor air quality data collected to date, which is described in the February 2010 newsletter. The new data collected in February 2010 do not change this conclusion.

WHAT ARE THE NEXT STEPS?

TRC will continue its expedited investigation of the low level VOCs detected in the high school's indoor air during the April school vacation period. TRC's investigation will include the following elements:

→ Collection of additional indoor air samples in the high school

→ Further investigation of vapor concentrations beneath the floor of the high school; and

→ Further investigation to determine whether these compounds are present in the groundwater beneath and near the high school

TRC is focused on characterizing the nature and extent of the VOCs identified in the indoor air samples and continuing to evaluate potential risk associated with exposure to these chemicals.

WHERE CAN I GET MORE INFORMATION?

All chemical concentration data for groundwater, seep water, soil gas, and indoor air are posted at the City's website http://www.newbedford-ma.gov/McCoy/Keithmiddleschool.html; filed under the "New Bedford High School (NBHS)" heading. Also, for additional detailed information, please see the *Immediate Response Action Plan* for RTN 4-22409 which will be posted on the City's website. If you have additional questions, please contact Cheryl Henlin, City of New Bedford Environmental Stewardship Department, at (508) 991-6188 or email cheryl.henlin@newbedford-ma.gov.

Summary of Analytical Results for Groundwater Samples -- January and February 2010
New Bedford High School
New Bedford, Massachusetts

Analysis	Analyte		Sample ID:	MW-4		MW-5			MW-6		MW-7			MW-8A	MW-11	MW-12	MW-13	MW-14	MW-15	MW-16	MW-17	MW-18	MW-19	MW-HH-13	MW-HRC-33
			Sample Date:	1/6/2010	2/17/2010	1/6/2010	1/6/2010	2/17/2010	1/7/2010	2/18/2010	1/7/2010	2/17/2010	2/17/2010	2/18/2010	2/19/2010	2/18/2010	2/19/2010	2/19/2010	2/18/2010	2/19/2010	2/18/2010	2/18/2010	2/18/2010	2/18/2010	2/17/2010
		GW-2	GW-3				Field Dup						Field Dup												
VOCs (ug/L)	Acetone	50,000	50,000	50 U	5.0 U	50 U	50 U	5.0 U	50 U	5.0 U	50 U	5.0 U	5.0 U	5.0 U	5.0 U	5.0 U	5.0 U	5.0 U	5.0 U	5.0 U	5.0 U	5.0 U	5.0 U	5.0 U	5.0 U	5.0 U
	tert-Amyl Methyl Ether (TAME)	NS	NS	0.50 U	2.0 U	0.50 U	0.50 U	2.0 U	0.50 U	2.0 U	0.50 U	2.0 U	2.0 U	2.0 U	2.0 U	2.0 U	2.0 U	2.0 U	2.0 U	2.0 U	2.0 U	2.0 U	2.0 U	2.0 U	2.0 U
	Benzene	2,000	10,000	1.0 U	1.0 U	1.0 U	1.0 U	1.0 U	1.0 U	1.0 U	1.0 U	1.0 U	1.0 U	1.0 U	1.0 U	1.0 U	1.0 U	1.0 U	1.0 U	1.0 U	1.0 U	1.0 U	1.0 U	1.0 U	1.0 U
	Bromobenzene	NS	NS	1.0 U	2.0 U	1.0 U	1.0 U	2.0 U	1.0 U	2.0 U	1.0 U	2.0 U	2.0 U	2.0 U	2.0 U	2.0 U	2.0 U	2.0 U	2.0 U	2.0 U	2.0 U	2.0 U	2.0 U	2.0 U	2.0 U
	Bromochloromethane	NS	NS	1.0 U	2.0 U	1.0 U	1.0 U	2.0 U	1.0 U	2.0 U	1.0 U	2.0 U	2.0 U	2.0 U	2.0 U	2.0 U	2.0 U	2.0 U	2.0 U	2.0 U	2.0 U	2.0 U	2.0 U	2.0 U	2.0 U
	Bromodichloromethane	6	50,000	5.0 U	1.0 U	5.0 U	5.0 U	1.0 U	5.0 U	1.0 U	5.0 U	1.0 U	1.0 U	1.0 U	1.0 U	1.0 U	1.0 U	1.0 U	1.0 U	1.0 U	1.0 U	1.0 U	1.0 U	1.0 U	1.0 U
	Bromoform	700	50,000	10 U	2.0 U	10 U	10 U	2.0 U	10 U	2.0 U	10 U	2.0 U	2.0 U	2.0 U	2.0 U	2.0 U	2.0 U	2.0 U	2.0 U	2.0 U	2.0 U	2.0 U	2.0 U	2.0 U	2.0 U
	Bromomethane	7	800	2.0 U	5.0 U	2.0 U	2.0 U	5.0 U	2.0 U	5.0 U	2.0 U	5.0 U	5.0 U	5.0 U	5.0 U	5.0 U	5.0 U	5.0 U	5.0 U	5.0 U	5.0 U	5.0 U	5.0 U	5.0 U	5.0 U
	2-Butanone (MEK)	50,000	50,000	20 U	5.0 U	20 U	20 U	5.0 U	20 U	5.0 U	20 U	5.0 U	5.0 U	5.0 U	5.0 U	5.0 U	5.0 U	5.0 U	5.0 U	5.0 U	5.0 U	5.0 U	5.0 U	5.0 U	5.0 U
	n-Butylbenzene	7,000[1]	50,000[1]	1.0 U	2.0 U	1.0 U	1.0 U	2.0 U	1.0 U	2.0 U	1.0 U	2.0 U	2.0 U	2.0 U	2.0 U	2.0 U	2.0 U	2.0 U	2.0 U	2.0 U	2.0 U	2.0 U	2.0 U	2.0 U	2.0 U
	sec-Butylbenzene	7,000[1]	50,000[1]	1.0 U	2.0 U	1.0 U	1.0 U	2.0 U	1.0 U	2.0 U	1.0 U	2.0 U	2.0 U	2.0 U	2.0 U	2.0 U	2.0 U	2.0 U	2.0 U	2.0 U	2.0 U	2.0 U	2.0 U	2.0 U	2.0 U
	tert-Butylbenzene	7,000[1]	50,000[1]	1.0 U	2.0 U	1.0 U	1.0 U	2.0 U	1.0 U	2.0 U	1.0 U	2.0 U	2.0 U	2.0 U	2.0 U	2.0 U	2.0 U	2.0 U	2.0 U	2.0 U	2.0 U	2.0 U	2.0 U	2.0 U	2.0 U
	tert-Butyl Ethyl Ether (TBEE)	NS	NS	0.50 U	2.0 U	0.50 U	0.50 U	2.0 U	0.50 U	2.0 U	0.50 U	2.0 U	2.0 U	2.0 U	2.0 U	2.0 U	2.0 U	2.0 U	2.0 U	2.0 U	2.0 U	2.0 U	2.0 U	2.0 U	2.0 U
	Carbon Disulfide	NS	NS	5.0 U	2.0 U	5.0 U	5.0 U	2.0 U	5.0 U	2.0 U	5.0 U	2.0 U	2.0 U	2.0 U	2.0 U	2.0 U	2.0 U	2.0 U	2.0 U	2.0 U	2.0 U	2.0 U	2.0 U	2.0 U	2.0 U
	Carbon Tetrachloride	2	5,000	1.0 U	1.0 U	1.0 U	1.0 U	1.0 U	1.0 U	1.0 U	1.0 U	1.0 U	1.0 U	1.0 U	1.0 U	1.0 U	1.0 U	1.0 U	1.0 U	1.0 U	1.0 U	1.0 U	1.0 U	1.0 U	1.0 U
	Chlorobenzene	200	1,000	1.0 U	1.0 U	1.0 U	1.0 U	1.0 U	1.0 U	1.0 U	1.0 U	1.0 U	1.0 U	1.0 U	1.0 U	1.0 U	1.0 U	1.0 U	1.0 U	1.0 U	1.0 U	1.0 U	1.0 U	1.0 U	1.0 U
	Chlorodibromomethane	20	50,000	10 U	1.0 U	10 U	10 U	1.0 U	10 U	1.0 U	10 U	1.0 U	1.0 U	1.0 U	1.0 U	1.0 U	1.0 U	1.0 U	1.0 U	1.0 U	1.0 U	1.0 U	1.0 U	1.0 U	1.0 U
	Chloroethane	NS	NS	2.0 U	2.0 U	2.0 U	2.0 U	2.0 U	2.0 U	2.0 U	2.0 U	2.0 U	2.0 U	2.0 U	2.0 U	2.0 U	2.0 U	2.0 U	2.0 U	2.0 U	2.0 U	2.0 U	2.0 U	2.0 U	2.0 U
	Chloroform	50	20,000	2.0 U	1.0 U	2.0 U	2.0 U	1.0 U	2.0 U	1.0 U	2.0 U	1.0 U	1.0 U	1.0 U	1.0 U	1.0 U	1.0 U	1.0 U	1.0 U	1.0 U	1.0 U	1.0 U	1.0 U	1.0 U	1.0 U
	Chloromethane	NS	NS	2.0 U	2.0 U	2.0 U	2.0 U	2.0 U	2.0 U	2.0 U	2.0 U	2.0 U	2.0 U	2.0 U	2.0 U	2.0 U	2.0 U	2.0 U	2.0 U	2.0 U	2.0 U	2.0 U	2.0 U	2.0 U	2.0 U
	2-Chlorotoluene	NS	NS	1.0 U	2.0 U	1.0 U	1.0 U	2.0 U	1.0 U	2.0 U	1.0 U	2.0 U	2.0 U	2.0 U	2.0 U	2.0 U	2.0 U	2.0 U	2.0 U	2.0 U	2.0 U	2.0 U	2.0 U	2.0 U	2.0 U
	4-Chlorotoluene	NS	NS	1.0 U	2.0 U	1.0 U	1.0 U	2.0 U	1.0 U	2.0 U	1.0 U	2.0 U	2.0 U	2.0 U	2.0 U	2.0 U	2.0 U	2.0 U	2.0 U	2.0 U	2.0 U	2.0 U	2.0 U	2.0 U	2.0 U
	1,2-Dibromo-3-chloropropane (DBCP	NS	NS	10 U	5.0 U	10 U	10 U	5.0 U	10 U	5.0 U	10 U	5.0 U	5.0 U	5.0 U	5.0 U	5.0 U	5.0 U	5.0 U	5.0 U	5.0 U	5.0 U	5.0 U	5.0 U	5.0 U	5.0 U
	1,2-Dibromoethane (EDB)	2	50,000	0.50 U	2.0 U	0.50 U	0.50 U	2.0 U	0.50 U	2.0 U	0.50 U	2.0 U	2.0 U	2.0 U	2.0 U	2.0 U	2.0 U	2.0 U	2.0 U	2.0 U	2.0 U	2.0 U	2.0 U	2.0 U	2.0 U
	Dibromomethane	NS	NS	1.0 U	2.0 U	1.0 U	1.0 U	2.0 U	1.0 U	2.0 U	1.0 U	2.0 U	2.0 U	2.0 U	2.0 U	2.0 U	2.0 U	2.0 U	2.0 U	2.0 U	2.0 U	2.0 U	2.0 U	2.0 U	2.0 U
	1,2-Dichlorobenzene	2,000	2,000	1.0 U	1.0 U	1.0 U	1.0 U	1.0 U	1.0 U	1.0 U	1.0 U	1.0 U	1.0 U	1.0 U	1.0 U	1.0 U	1.0 U	1.0 U	1.0 U	1.0 U	1.0 U	1.0 U	1.0 U	1.0 U	1.0 U
	1,3-Dichlorobenzene	2,000	50,000	1.0 U	1.0 U	1.0 U	1.0 U	1.0 U	1.0 U	1.0 U	1.0 U	1.0 U	1.0 U	1.0 U	1.0 U	1.0 U	1.0 U	1.0 U	1.0 U	1.0 U	1.0 U	1.0 U	1.0 U	1.0 U	1.0 U
	1,4-Dichlorobenzene	200	8,000	1.0 U	1.0 U	1.0 U	1.0 U	1.0 U	1.0 U	1.0 U	1.0 U	1.0 U	1.0 U	1.0 U	1.0 U	1.0 U	1.0 U	1.0 U	1.0 U	1.0 U	1.0 U	1.0 U	1.0 U	1.0 U	1.0 U
	Dichlorodifluoromethane (Freon 12)	NS	NS	2.0 U	2.0 U	2.0 U	2.0 U	2.0 U	2.0 U	2.0 U	2.0 U	2.0 U	2.0 U	2.0 U	2.0 U	2.0 U	2.0 U	2.0 U	2.0 U	2.0 U	2.0 U	2.0 U	2.0 U	2.0 U	2.0 U
	1,1-Dichloroethane	1,000	20,000	1.0 U	1.0 U	1.0 U	1.0 U	1.0 U	1.0 U	1.0 U	1.0 U	1.0 U	1.0 U	1.0 U	1.0 U	1.0 U	1.0 U	1.0 U	1.0 U	1.0 U	1.0 U	1.0 U	1.0 U	1.0 U	1.0 U
	1,2-Dichloroethane	5	20,000	1.0 U	1.0 U	1.0 U	1.0 U	1.0 U	1.0 U	1.0 U	1.0 U	1.0 U	1.0 U	1.0 U	1.0 U	1.0 U	1.0 U	1.0 U	1.0 U	1.0 U	1.0 U	1.0 U	1.0 U	1.0 U	1.0 U
	1,1-Dichloroethylene	80	30,000	1.0 U	1.0 U	1.0 U	1.0 U	1.0 U	1.0 U	1.0 U	1.0 U	1.0 U	1.0 U	1.0 U	1.0 U	1.0 U	1.0 U	1.0 U	1.0 U	1.0 U	1.0 U	1.0 U	1.0 U	1.0 U	1.0 U
	cis-1,2-Dichloroethylene	100	50,000	1.0 U	1.0 U	**3.7**	**4.1**	**5.9**	1.0 U	1.0 U	**20**	**30**	**30**	1.0 U	1.0 U	1.0 U	1.0 U	1.0 U	1.0 U	1.0 U	1.0 U	1.0 U	1.0 U	1.0 U	1.0 U
	trans-1,2-Dichloroethylene	90	50,000	1.0 U	1.0 U	1.0 U	1.0 U	1.0 U	1.0 U	1.0 U	1.0 U	1.0 U	1.0 U	1.0 U	1.0 U	1.0 U	1.0 U	1.0 U	1.0 U	1.0 U	1.0 U	1.0 U	1.0 U	1.0 U	1.0 U
	1,2-Dichloropropane	3	50,000	1.0 U	1.0 U	1.0 U	1.0 U	1.0 U	1.0 U	1.0 U	1.0 U	1.0 U	1.0 U	1.0 U	1.0 U	1.0 U	1.0 U	1.0 U	1.0 U	1.0 U	1.0 U	1.0 U	1.0 U	1.0 U	1.0 U
	1,3-Dichloropropane	NS	NS	0.50 U	2.0 U	0.50 U	0.50 U	2.0 U	0.50 U	2.0 U	0.50 U	2.0 U	2.0 U	2.0 U	2.0 U	2.0 U	2.0 U	2.0 U	2.0 U	2.0 U	2.0 U	2.0 U	2.0 U	2.0 U	2.0 U
	2,2-Dichloropropane	NS	NS	1.0 U	2.0 U	1.0 U	1.0 U	2.0 U	1.0 U	2.0 U	1.0 U	2.0 U	2.0 U	2.0 U	2.0 U	2.0 U	2.0 U	2.0 U	2.0 U	2.0 U	2.0 U	2.0 U	2.0 U	2.0 U	2.0 U
	1,1-Dichloropropene	NS	NS	2.0 U	2.0 U	2.0 U	2.0 U	2.0 U	2.0 U	2.0 U	2.0 U	2.0 U	2.0 U	2.0 U	2.0 U	2.0 U	2.0 U	2.0 U	2.0 U	2.0 U	2.0 U	2.0 U	2.0 U	2.0 U	2.0 U
	cis-1,3-Dichloropropene	10[2]	200[2]	5.0 U	0.50 U	5.0 U	5.0 U	0.50 U	5.0 U	0.50 U	5.0 U	0.50 U	0.50 U	0.50 U	0.50 U	0.50 U	0.50 U	0.50 U	0.50 U	0.50 U	0.50 U	0.50 U	0.50 U	0.50 U	0.50 U
	trans-1,3-Dichloropropene	10[2]	200[2]	5.0 U	0.50 U	5.0 U	5.0 U	0.50 U	5.0 U	0.50 U	5.0 U	0.50 U	0.50 U	0.50 U	0.50 U	0.50 U	0.50 U	0.50 U	0.50 U	0.50 U	0.50 U	0.50 U	0.50 U	0.50 U	0.50 U
	Diethyl Ether	NS	NS	2.0 U	2.0 U	2.0 U	2.0 U	2.0 U	2.0 U	2.0 U	2.0 U	2.0 U	2.0 U	2.0 U	2.0 U	2.0 U	2.0 U	2.0 U	2.0 U	2.0 U	2.0 U	2.0 U	2.0 U	2.0 U	2.0 U
	Diisopropyl Ether (DIPE)	NS	NS	0.50 U	2.0 U	0.50 U	0.50 U	2.0 U	0.50 U	2.0 U	0.50 U	2.0 U	2.0 U	2.0 U	2.0 U	2.0 U	2.0 U	2.0 U	2.0 U	2.0 U	2.0 U	2.0 U	2.0 U	2.0 U	2.0 U
	1,4-Dioxane	6,000	50,000	50 U	250 U	50 U	50 U	250 U	50 U	250 U	50 U	250 U	250 U	250 U	250 U	250 U	250 U	250 U	250 U	250 U	250 U	250 U	250 U	250 U	250 U
	Ethylbenzene	20,000	5,000	1.0 U	1.0 U	1.0 U	1.0 U	1.0 U	1.0 U	1.0 U	1.0 U	1.0 U	1.0 U	1.0 U	1.0 U	1.0 U	1.0 U	1.0 U	1.0 U	1.0 U	1.0 U	1.0 U	1.0 U	1.0 U	1.0 U
	Hexachlorobutadiene	1	3,000	1.0 U	0.60 U	1.0 U	1.0 U	0.60 U	1.0 U	0.60 U	1.0 U	0.60 U	0.60 U	0.60 U	0.60 U	0.60 U	0.60 U	0.60 U	0.60 U	0.60 U	0.60 U	0.60 U	0.60 U	0.60 U	0.60 U
	2-Hexanone (MBK)	NS	NS	10 U	5.0 U	10 U	10 U	5.0 U	10 U	5.0 U	10 U	5.0 U	5.0 U	5.0 U	5.0 U	5.0 U	5.0 U	5.0 U	5.0 U	5.0 U	5.0 U	5.0 U	5.0 U	5.0 U	5.0 U
	Isopropylbenzene (Cumene)	7,000[1]	50,000[1]	1.0 U	2.0 U	1.0 U	1.0 U	2.0 U	1.0 U	2.0 U	1.0 U	2.0 U	2.0 U	2.0 U	2.0 U	2.0 U	2.0 U	2.0 U	2.0 U	2.0 U	2.0 U	2.0 U	2.0 U	2.0 U	2.0 U
	p-Isopropyltoluene (p-Cymene)	7,000[1]	50,000[1]	1.0 U	2.0 U	1.0 U	1.0 U	2.0 U	1.0 U	2.0 U	1.0 U	2.0 U	2.0 U	2.0 U	2.0 U	2.0 U	2.0 U	2.0 U	2.0 U	2.0 U	2.0 U	2.0 U	2.0 U	2.0 U	2.0 U
	Methyl tert-Butyl Ether (MTBE)	50,000	50,000	1.0 U	2.0 U	1.0 U	1.0 U	2.0 U	1.0 U	2.0 U	1.0 U	2.0 U	2.0 U	2.0 U	2.0 U	2.0 U	2.0 U	2.0 U	2.0 U	2.0 U	2.0 U	2.0 U	2.0 U	2.0 U	2.0 U
	Methylene Chloride	10,000	50,000	5.0 U	5.0 U	5.0 U	5.0 U	5.0 U	5.0 U	5.0 U	5.0 U	5.0 U	5.0 U	5.0 U	5.0 U	5.0 U	5.0 U	5.0 U	5.0 U	5.0 U	5.0 U	5.0 U	5.0 U	5.0 U	5.0 U
	4-Methyl-2-pentanone (MIBK)	50,000	50,000	10 U	5.0 U	10 U	10 U	5.0 U	10 U	5.0 U	10 U	5.0 U	5.0 U	5.0 U	5.0 U	5.0 U	5.0 U	5.0 U	5.0 U	5.0 U	5.0 U	5.0 U	5.0 U	5.0 U	5.0 U
	Naphthalene	1,000	20,000	2.0 U	5.0 U	2.0 U	2.0 U	5.0 U	2.0 U	5.0 U	2.0 U	5.0 U	5.0 U	5.0 U	5.0 U	5.0 U	5.0 U	5.0 U	5.0 U	5.0 U	5.0 U	5.0 U	5.0 U	5.0 U	5.0 U
	n-Propylbenzene	7,000[1]	50,000[1]	1.0 U	2.0 U	1.0 U	1.0 U	2.0 U	1.0 U	2.0 U	1.0 U	2.0 U	2.0 U	2.0 U	2.0 U	2.0 U	2.0 U	2.0 U	2.0 U	2.0 U	2.0 U	2.0 U	2.0 U	2.0 U	2.0 U
	Styrene	100	6,000	1.0 U	1.0 U	1.0 U	1.0 U	1.0 U	1.0 U	1.0 U	1.0 U	1.0 U	1.0 U	1.0 U	1.0 U	1.0 U	1.0 U	1.0 U	1.0 U	1.0 U	1.0 U	1.0 U	1.0 U	1.0 U	1.0 U
	1,1,1,2-Tetrachloroethane	10	50,000	5.0 U	1.0 U	5.0 U	5.0 U	1.0 U	5.0 U	1.0 U	5.0 U	1.0 U	1.0 U	1.0 U	1.0 U	1.0 U	1.0 U	1.0 U	1.0 U	1.0 U	1.0 U	1.0 U	1.0 U	1.0 U	1.0 U
	1,1,2,2-Tetrachloroethane	9	50,000	0.50 U	1.0 U	0.50 U	0.50 U	1.0 U	0.50 U	1.0 U	0.50 U	1.0 U	1.0 U	1.0 U	1.0 U	1.0 U	1.0 U	1.0 U	1.0 U	1.0 U	1.0 U	1.0 U	1.0 U	1.0 U	1.0 U
	Tetrachloroethylene	50	30,000	1.0 U	1.0 U	1.0 U	1.0 U	1.0 U	1.0 U	1.0 U	**63**	**60**	**64**	1.0 U	1.0 U	1.0 U	1.0 U	1.0 U	1.0 U	1.0 U	1.0 U	1.0 U	1.0 U	1.0 U	1.0 U
	Tetrahydrofuran	NS	NS	10 U	10 U	10 U	10 U	10 U	10 U	10 U	10 U	10 U	10 U	10 U	10 U	10 U	10 U	10 U	10 U	10 U	10 U	10 U	10 U	10 U	10 U
	Toluene	50,000	40,000	1.0 U	1.0 U	1.0 U	1.0 U	1.0 U	1.0 U	1.0 U	1.0 U	1.0 U	1.0 U	1.0 U	1.0 U	1.0 U	1.0 U	1.0 U	1.0 U	1.0 U	1.0 U	1.0 U	1.0 U	1.0 U	1.0 U
	1,2,3-Trichlorobenzene	NS	NS	5.0 U	2.0 U	5.0 U	5.0 U	2.0 U	5.0 U	2.0 U	5.0 U	2.0 U	2.0 U	2.0 U	2.0 U	2.0 U	2.0 U	2.0 U	2.0 U	2.0 U	2.0 U	2.0 U	2.0 U	2.0 U	2.0 U
	1,2,4-Trichlorobenzene	2,000	50,000	1.0 U	2.0 U	1.0 U	1.0 U	2.0 U	1.0 U	2.0 U	1.0 U	2.0 U	2.0 U	2.0 U	2.0 U	2.0 U	2.0 U	2.0 U	2.0 U	2.0 U	2.0 U	2.0 U	2.0 U	2.0 U	2.0 U
	1,1,1-Trichloroethane	4,000	20,000	1.0 U	1.0 U	1.0 U	1.0 U	1.0 U	1.0 U	1.0 U	1.0 U	1.0 U	1.0 U	1.0 U	1.0 U	1.0 U	1.0 U	1.0 U	1.0 U	1.0 U	1.0 U	1.0 U	1.0 U	1.0 U	1.0 U
	1,1,2-Trichloroethane	900	50,000	1.0 U	1.0 U	1.0 U	1.0 U	1.0 U	1.0 U	1.0 U	1.0 U	1.0 U	1.0 U	1.0 U	1.0 U	1.0 U	1.0 U	1.0 U	1.0 U	1.0 U	1.0 U	1.0 U	1.0 U	1.0 U	1.0 U
	Trichloroethylene	30	5,000	1.0 U	1.0 U	1.0 U	1.0 U	1.0 U	1.0 U	1.0 U	**6.8**	**5.8**	**6.5**	1.0 U	1.0 U	1.0 U	1.0 U	1.0 U	1.0 U	1.0 U	1.0 U	1.0 U	1.0 U	1.0 U	1.0 U
	Trichlorofluoromethane (Freon 11)	NS	NS	2.0 U	2.0 U	2.0 U	2.0 U	2.0 U	2.0 U	2.0 U	2.0 U	2.0 U	2.0 U	2.0 U	2.0 U	2.0 U	2.0 U	2.0 U	2.0 U	2.0 U	2.0 U	2.0 U	2.0 U	2.0 U	2.0 U
	1,2,3-Trichloropropane	NS	NS	2.0 U	2.0 U	2.0 U	2.0 U	2.0 U	2.0 U	2.0 U	2.0 U	2.0 U	2.0 U	2.0 U	2.0 U	2.0 U	2.0 U	2.0 U	2.0 U	2.0 U	2.0 U	2.0 U	2.0 U	2.0 U	2.0 U
	1,2,4-Trimethylbenzene	7,000[1]	50,000[1]	1.0 U	2.0 U	1.0 U	1.0 U	2.0 U	1.0 U	2.0 U	1.0 U	2.0 U	2.0 U	2.0 U	2.0 U	2.0 U	2.0 U	2.0 U	2.0 U	2.0 U	2.0 U	2.0 U	2.0 U	2.0 U	2.0 U
	1,3,5-Trimethylbenzene	7,000[1]	50,000[1]	1.0 U	2.0 U	1.0 U	1.0 U	2.0 U	1.0 U	2.0 U	1.0 U	2.0 U	2.0 U	2.0 U	2.0 U	2.0 U	2.0 U	2.0 U	2.0 U	2.0 U	2.0 U	2.0 U	2.0 U	2.0 U	2.0 U

Summary of Analytical Results for Groundwater Samples – January and February 2010
New Bedford High School
New Bedford, Massachusetts

Analysis	Analyte	Sample ID:		MW-4		MW-5			MW-6		MW-7			MW-8A	MW-11	MW-12	MW-13	MW-14	MW-15	MW-16	MW-17	MW-18	MW-19	MW-HH-13	MW-HRC-33
			Sample Date:	1/6/2010	2/17/2010	1/6/2010	1/6/2010	2/17/2010	1/7/2010	2/18/2010	1/7/2010	2/17/2010	2/17/2010	2/18/2010	2/19/2010	2/18/2010	2/19/2010	2/19/2010	2/18/2010	2/19/2010	2/18/2010	2/18/2010	2/18/2010	2/18/2010	2/17/2010
		GW-2	GW-3				Field Dup						Field Dup												
	Vinyl Chloride	2	50,000	2.0 U	1.0 U	2.0 U	2.0 U	1.0 U	2.0 U	1.0 U	**3.4**	**9.2**	**9.9**	1.0 U	1.0 U	1.0 U	1.0 U	1.0 U	1.0 U	1.0 U	1.0 U	1.0 U	1.0 U	1.0 U	1.0 U
	m+p Xylene	9,000	5,000	2.0 U	2.0 U	2.0 U	2.0 U	2.0 U	2.0 U	2.0 U	2.0 U	2.0 U	2.0 U	2.0 U	2.0 U	2.0 U	2.0 U	2.0 U	2.0 U	2.0 U	2.0 U	2.0 U	2.0 U	2.0 U	2.0 U
	o-Xylene	9,000	5,000	1.0 U	1.0 U	1.0 U	1.0 U	1.0 U	1.0 U	1.0 U	1.0 U	1.0 U	1.0 U	1.0 U	1.0 U	1.0 U	1.0 U	1.0 U	1.0 U	1.0 U	1.0 U	1.0 U	1.0 U	1.0 U	1.0 U

Notes:

ug/L - micrograms per liter.

NS - No MassDEP standards exist for this compound.

U - Compound was not detected at specified quantitation limit.

Values in **Bold** indicate the compound was detected.

Values shown in Bold and shaded type exceed one or more of the listed MassDEP Method 1 standards.

VOCs - Volatile Organic Compounds.

(1) - MassDEP Method 1 standards for C9-C10 aromatic hydrocarbons used.

(2) - MassDEP Method 1 standards for 1,3-Dichloropropene used.

Summary of Analytical Results for Basement Water Samples -- December 2009 and January 2010
New Bedford High School
New Bedford, Massachusetts

Analysis	Analyte		Sample ID:	NBHSBRM	BRM-S-1			BRM-S-2			BRM-S-3				FIP-S-1		
			Sample Date:	2/20/2009	12/2/2009	1/7/2010	1/30/2010	12/2/2009	1/7/2010	1/30/2010	12/2/2009	1/7/2010	1/30/2010	1/30/2010	12/2/2009	1/7/2010	1/30/2010
		GW-2	GW-3											Field Dup			
VOCs																	
(ug/L)	Acetone	50,000	50,000	NA	50 U	50 U	5.0 U	50 U	50 U	5.0 U	50 U	50 U	5.0 U	5.0 U	50 U	50 U	5.0 U
	tert-Amyl Methyl Ether (TAME)	NS	NS	NA	0.50 U	0.50 U	2.0 U	0.50 U	0.50 U	2.0 U	0.50 U	0.50 U	2.0 U	2.0 U	0.50 U	0.50 U	2.0 U
	Benzene	2,000	10,000	NA	1.0 U	1.0 U	1.0 U	1.0 U	1.0 U	1.0 U	1.0 U	1.0 U	1.0 U	1.0 U	1.0 U	1.0 U	1.0 U
	Bromobenzene	NS	NS	NA	1.0 U	1.0 U	1.0 U	1.0 U	1.0 U	1.0 U	1.0 U	1.0 U	1.0 U	1.0 U	1.0 U	1.0 U	1.0 U
	Bromochloromethane	NS	NS	NA	1.0 U	1.0 U	1.0 U	1.0 U	1.0 U	1.0 U	1.0 U	1.0 U	1.0 U	1.0 U	1.0 U	1.0 U	1.0 U
	Bromodichloromethane	6	50,000	NA	1.0 U	5.0 U	1.0 U	1.0 U	5.0 U	1.0 U	1.0 U	5.0 U	1.0 U	1.0 U	1.0 U	5.0 U	1.0 U
	Bromoform	700	50,000	NA	5.0 U	10 U	1.0 U	5.0 U	10 U	1.0 U	5.0 U	10 U	1.0 U	1.0 U	5.0 U	10 U	1.0 U
	Bromomethane	7	800	NA	2.0 U	2.0 U	5.0 U	2.0 U	2.0 U	5.0 U	2.0 U	2.0 U	5.0 U	5.0 U	2.0 U	2.0 U	5.0 U
	2-Butanone (MEK)	50,000	50,000	NA	20 U	20 U	10 U	20 U	20 U	10 U	20 U	20 U	10 U	10 U	20 U	20 U	10 U
	n-Butylbenzene	7,000[1]	50,000[1]	NA	1.0 U	1.0 U	1.0 U	1.0 U	1.0 U	1.0 U	1.0 U	1.0 U	1.0 U	1.0 U	1.0 U	1.0 U	1.0 U
	sec-Butylbenzene	7,000[1]	50,000[1]	NA	1.0 U	1.0 U	1.0 U	1.0 U	1.0 U	1.0 U	1.0 U	1.0 U	1.0 U	1.0 U	1.0 U	1.0 U	1.0 U
	tert-Butylbenzene	7,000[1]	50,000[1]	NA	1.0 U	1.0 U	1.0 U	1.0 U	1.0 U	1.0 U	1.0 U	1.0 U	1.0 U	1.0 U	1.0 U	1.0 U	1.0 U
	tert-Butyl Ethyl Ether (TBEE)	NS	NS	NA	0.50 U	0.50 U	2.0 U	0.50 U	0.50 U	2.0 U	0.50 U	0.50 U	2.0 U	2.0 U	0.50 U	0.50 U	2.0 U
	Carbon Disulfide	NS	NS	NA	3.0 U	5.0 U	1.0 U	3.0 U	5.0 U	1.0 U	3.0 U	5.0 U	1.0 U	1.0 U	3.0 U	5.0 U	1.0 U
	Carbon Tetrachloride	2	5,000	NA	1.0 U	1.0 U	1.0 U	1.0 U	1.0 U	1.0 U	1.0 U	1.0 U	1.0 U	1.0 U	1.0 U	1.0 U	1.0 U
	Chlorobenzene	200	1,000	NA	1.0 U	1.0 U	1.0 U	1.0 U	1.0 U	1.0 U	1.0 U	**9.5**	1.0 U	1.0 U	1.0 U	1.0 U	1.0 U
	Chlorodibromomethane	20	50,000	NA	0.50 U	10 U	1.0 U	0.50 U	10 U	1.0 U	0.50 U	10 U	1.0 U	1.0 U	0.50 U	10 U	1.0 U
	Chloroethane	NS	NS	NA	2.0 U	2.0 U	1.0 U	2.0 U	2.0 U	1.0 U	2.0 U	2.0 U	1.0 U	1.0 U	2.0 U	2.0 U	1.0 U
	Chloroform	50	20,000	NA	2.0 U	2.0 U	1.0 U	2.0 U	2.0 U	1.0 U	2.0 U	2.0 U	1.0 U	1.0 U	2.0 U	2.0 U	1.0 U
	Chloromethane	NS	NS	NA	2.0 U	2.0 U	1.0 U	2.0 U	2.0 U	1.0 U	2.0 U	2.0 U	1.0 U	1.0 U	2.0 U	2.0 U	1.0 U
	2-Chlorotoluene	NS	NS	NA	1.0 U	1.0 U	1.0 U	1.0 U	1.0 U	1.0 U	1.0 U	1.0 U	1.0 U	1.0 U	1.0 U	1.0 U	1.0 U
	4-Chlorotoluene	NS	NS	NA	1.0 U	1.0 U	1.0 U	1.0 U	1.0 U	1.0 U	1.0 U	1.0 U	1.0 U	1.0 U	1.0 U	1.0 U	1.0 U
	1,2-Dibromo-3-chloropropane (DBCP)	NS	NS	NA	5.0 U	10 U	5.0 U	5.0 U	10 U	5.0 U	5.0 U	10 U	5.0 U	5.0 U	5.0 U	10 U	5.0 U
	1,2-Dibromoethane (EDB)	2	50,000	NA	0.50 U	0.50 U	1.0 U	0.50 U	0.50 U	1.0 U	0.50 U	0.50 U	1.0 U	1.0 U	0.50 U	0.50 U	1.0 U
	Dibromomethane	NS	NS	NA	1.0 U	1.0 U	1.0 U	1.0 U	1.0 U	1.0 U	1.0 U	1.0 U	1.0 U	1.0 U	1.0 U	1.0 U	1.0 U
	1,2-Dichlorobenzene	2,000	2,000	NA	1.0 U	1.0 U	1.0 U	1.0 U	1.0 U	1.0 U	1.0 U	1.0 U	1.0 U	1.0 U	1.0 U	1.0 U	1.0 U
	1,3-Dichlorobenzene	2,000	50,000	NA	1.0 U	1.0 U	1.0 U	1.0 U	1.0 U	1.0 U	1.0 U	**1.6**	1.0 U	1.0 U	1.0 U	1.0 U	1.0 U
	1,4-Dichlorobenzene	200	8,000	NA	1.0 U	1.0 U	1.0 U	1.0 U	1.0 U	1.0 U	1.0 U	**6.8**	1.0 U	1.0 U	1.0 U	1.0 U	1.0 U
	Dichlorodifluoromethane (Freon 12)	NS	NS	NA	2.0 U	2.0 U	1.0 U	2.0 U	2.0 U	1.0 U	2.0 U	2.0 U	1.0 U	1.0 U	2.0 U	2.0 U	1.0 U
	1,1-Dichloroethane	1,000	20,000	NA	1.0 U	1.0 U	1.0 U	1.0 U	1.0 U	1.0 U	1.0 U	1.0 U	1.0 U	1.0 U	1.0 U	1.0 U	1.0 U
	1,2-Dichloroethane	5	20,000	NA	1.0 U	1.0 U	1.0 U	1.0 U	1.0 U	1.0 U	1.0 U	1.0 U	1.0 U	1.0 U	1.0 U	1.0 U	1.0 U
	1,1-Dichloroethylene	80	30,000	NA	1.0 U	1.0 U	1.0 U	1.0 U	1.0 U	1.0 U	1.0 U	1.0 U	1.0 U	1.0 U	1.0 U	1.0 U	1.0 U
	cis-1,2-Dichloroethylene	100	50,000	NA	1.0 U	1.0 U	1.0 U	1.0 U	1.0 U	1.0 U	**54**	**180**	**24**	**23**	1.0 U	**5.6**	**7.2**
	trans-1,2-Dichloroethylene	90	50,000	NA	1.0 U	1.0 U	1.0 U	1.0 U	1.0 U	1.0 U	**14**	**57**	**8.2**	**8.1**	1.0 U	**1.0**	**1.4**
	1,2-Dichloropropane	3	50,000	NA	1.0 U	1.0 U	1.0 U	1.0 U	1.0 U	1.0 U	1.0 U	1.0 U	1.0 U	1.0 U	1.0 U	1.0 U	1.0 U
	1,3-Dichloropropane	NS	NS	NA	0.50 U	0.50 U	1.0 U	0.50 U	0.50 U	1.0 U	0.50 U	0.50 U	1.0 U	1.0 U	0.50 U	0.50 U	1.0 U
	2,2-Dichloropropane	NS	NS	NA	1.0 U	1.0 U	1.0 U	1.0 U	1.0 U	1.0 U	1.0 U	1.0 U	1.0 U	1.0 U	1.0 U	1.0 U	1.0 U
	1,1-Dichloropropene	NS	NS	NA	2.0 U	2.0 U	1.0 U	2.0 U	2.0 U	1.0 U	2.0 U	2.0 U	1.0 U	1.0 U	2.0 U	2.0 U	1.0 U
	cis-1,3-Dichloropropene	10[2]	200[2]	NA	0.50 U	5.0 U	0.50 U	0.50 U	5.0 U	0.50 U	0.50 U	5.0 U	0.50 U	0.50 U	0.50 U	5.0 U	0.50 U
	trans-1,3-Dichloropropene	10[2]	200[2]	NA	0.50 U	5.0 U	0.50 U	0.50 U	5.0 U	0.50 U	0.50 U	5.0 U	0.50 U	0.50 U	0.50 U	5.0 U	0.50 U
	Diethyl Ether	NS	NS	NA	2.0 U	2.0 U	2.0 U	2.0 U	2.0 U	2.0 U	2.0 U	2.0 U	2.0 U	2.0 U	2.0 U	2.0 U	2.0 U
	Diisopropyl Ether (DIPE)	NS	NS	NA	0.50 U	0.50 U	2.0 U	0.50 U	0.50 U	2.0 U	0.50 U	0.50 U	2.0 U	2.0 U	0.50 U	0.50 U	2.0 U
	1,4-Dioxane	6,000	50,000	NA	50 U	50 U	100 U	50 U	50 U	100 U	50 U	50 U	100 U	100 U	50 U	50 U	100 U
	Ethylbenzene	20,000	5,000	NA	1.0 U	1.0 U	1.0 U	1.0 U	1.0 U	1.0 U	1.0 U	1.0 U	1.0 U	1.0 U	1.0 U	1.0 U	1.0 U
	Hexachlorobutadiene	1	3,000	NA	1.0 U	1.0 U	0.50 U	1.0 U	1.0 U	0.50 U	1.0 U	1.0 U	0.50 U	0.50 U	1.0 U	1.0 U	0.50 U
	2-Hexanone (MBK)	NS	NS	NA	10 U	10 U	1.0 U	10 U	10 U	1.0 U	10 U	10 U	1.0 U	1.0 U	10 U	10 U	1.0 U
	Isopropylbenzene (Cumene)	7,000[1]	50,000[1]	NA	1.0 U	1.0 U	1.0 U	1.0 U	1.0 U	1.0 U	1.0 U	1.0 U	1.0 U	1.0 U	1.0 U	1.0 U	1.0 U
	p-Isopropyltoluene (p-Cymene)	7,000[1]	50,000[1]	NA	1.0 U	1.0 U	1.0 U	1.0 U	1.0 U	1.0 U	1.0 U	1.0 U	1.0 U	1.0 U	1.0 U	1.0 U	1.0 U
	Methyl tert-Butyl Ether (MTBE)	50,000	50,000	NA	1.0 U	1.0 U	2.0 U	1.0 U	1.0 U	2.0 U	1.0 U	1.0 U	2.0 U	2.0 U	1.0 U	1.0 U	2.0 U
	Methylene Chloride	10,000	50,000	NA	5.0 U	5.0 U	1.0 U	5.0 U	5.0 U	1.0 U	5.0 U	5.0 U	1.0 U	1.0 U	5.0 U	5.0 U	1.0 U
	4-Methyl-2-pentanone (MIBK)	50,000	50,000	NA	10 U	10 U	5.0 U	10 U	10 U	5.0 U	10 U	10 U	5.0 U	5.0 U	10 U	10 U	5.0 U
	Naphthalene	1,000	20,000	NA	5.0 U	2.0 U	5.0 U	5.0 U	2.0 U	5.0 U	5.0 U	2.0 U	5.0 U	5.0 U	5.0 U	2.0 U	5.0 U
	n-Propylbenzene	7,000[1]	50,000[1]	NA	1.0 U	1.0 U	1.0 U	1.0 U	1.0 U	1.0 U	1.0 U	1.0 U	1.0 U	1.0 U	1.0 U	1.0 U	1.0 U
	Styrene	100	6,000	NA	1.0 U	1.0 U	1.0 U	1.0 U	1.0 U	1.0 U	1.0 U	1.0 U	1.0 U	1.0 U	1.0 U	1.0 U	1.0 U
	1,1,1,2-Tetrachloroethane	10	50,000	NA	1.0 U	5.0 U	1.0 U	1.0 U	5.0 U	1.0 U	1.0 U	5.0 U	1.0 U	1.0 U	1.0 U	5.0 U	1.0 U
	1,1,2,2-Tetrachloroethane	9	50,000	NA	0.50 U	0.50 U	2.0 U	0.50 U	0.50 U	2.0 U	0.50 U	0.50 U	2.0 U	2.0 U	0.50 U	0.50 U	2.0 U

Summary of Analytical Results for Basement Water Samples -- December 2009 and January 2010
New Bedford High School
New Bedford, Massachusetts

Analysis	Analyte		Sample ID:	NBHSBRM	BRM-S-1			BRM-S-2			BRM-S-3				FIP-S-1		
			Sample Date:	2/20/2009	12/2/2009	1/7/2010	1/30/2010	12/2/2009	1/7/2010	1/30/2010	12/2/2009	1/7/2010	1/30/2010	1/30/2010	12/2/2009	1/7/2010	1/30/2010
		GW-2	GW-3											Field Dup			
	Tetrachloroethylene	50	30,000	NA	1.0 U	1.0 U	1.0 U	1.0 U	1.0 U	1.0 U	1.0 U	1.0 U	1.0 U	1.0 U	1.0 U	1.0 U	1.0 U
	Tetrahydrofuran	NS	NS	NA	10 U	10 U	5.0 U	10 U	10 U	5.0 U	10 U	10 U	5.0 U	5.0 U	10 U	10 U	5.0 U
	Toluene	50,000	40,000	NA	1.0 U	1.0 U	1.0 U	1.0 U	1.0 U	1.0 U	1.0 U	1.0 U	1.0 U	1.0 U	1.0 U	1.0 U	1.0 U
	1,2,3-Trichlorobenzene	NS	NS	NA	5.0 U	5.0 U	2.0 U	5.0 U	5.0 U	2.0 U	5.0 U	5.0 U	2.0 U	2.0 U	5.0 U	5.0 U	2.0 U
	1,2,4-Trichlorobenzene	2,000	50,000	NA	5.0 U	1.0 U	2.0 U	5.0 U	1.0 U	2.0 U	5.0 U	1.0 U	2.0 U	2.0 U	5.0 U	1.0 U	2.0 U
	1,1,1-Trichloroethane	4,000	20,000	NA	1.0 U	1.0 U	1.0 U	1.0 U	1.0 U	1.0 U	1.0 U	1.0 U	1.0 U	1.0 U	1.0 U	1.0 U	1.0 U
	1,1,2-Trichloroethane	900	50,000	NA	1.0 U	1.0 U	1.0 U	1.0 U	1.0 U	1.0 U	1.0 U	1.0 U	1.0 U	1.0 U	1.0 U	1.0 U	1.0 U
	Trichloroethylene	30	5,000	NA	1.0 U	1.0 U	1.0 U	1.0 U	1.0 U	1.0 U	1.0 U	**6.0**	**1.2**	**1.3**	1.0 U	1.0 U	1.0 U
	Trichlorofluoromethane (Freon 11)	NS	NS	NA	2.0 U	2.0 U	2.0 U	2.0 U	2.0 U	2.0 U	2.0 U	2.0 U	2.0 U	2.0 U	2.0 U	2.0 U	2.0 U
	1,2,3-Trichloropropane	NS	NS	NA	2.0 U	2.0 U	1.0 U	2.0 U	2.0 U	1.0 U	2.0 U	2.0 U	1.0 U	1.0 U	2.0 U	2.0 U	1.0 U
	1,2,4-Trimethylbenzene	7,000[1]	50,000[1]	NA	1.0 U	1.0 U	1.0 U	1.0 U	1.0 U	1.0 U	1.0 U	1.0 U	1.0 U	1.0 U	1.0 U	1.0 U	1.0 U
	1,3,5-Trimethylbenzene	7,000[1]	50,000[1]	NA	1.0 U	1.0 U	1.0 U	1.0 U	1.0 U	1.0 U	1.0 U	1.0 U	1.0 U	1.0 U	1.0 U	1.0 U	1.0 U
	Vinyl Chloride	2	50,000	NA	2.0 U	2.0 U	1.0 U	2.0 U	2.0 U	1.0 U	**2.1**	**34**	**1.4**	**1.3**	2.0 U	2.0 U	**1.3**
	m+p Xylene	9,000	5,000	NA	2.0 U	2.0 U	2.0 U	2.0 U	2.0 U	2.0 U	2.0 U	2.0 U	2.0 U	2.0 U	2.0 U	2.0 U	2.0 U
	o-Xylene	9,000	5,000	NA	1.0 U	1.0 U	2.0 U	1.0 U	1.0 U	2.0 U	1.0 U	1.0 U	2.0 U	2.0 U	1.0 U	1.0 U	2.0 U
EPH																	
(ug/L)	C9-C18 Aliphatics	5,000	50,000	NA	150 U	NA	NA	150 U	NA	NA	150 U	NA	NA	NA	150 U	NA	NA
	C19-C36 Aliphatics	NS	50,000	NA	**190**	NA	NA	150 U	NA	NA	150 U	NA	NA	NA	150 U	NA	NA
	C11-C22 Aromatics	50,000	5,000	NA	100 U	NA	NA	100 U	NA	NA	100 U	NA	NA	NA	100 U	NA	NA
	Acenaphthene	NS	6,000	NA	2.0 U	NA	NA	2.0 U	NA	NA	2.0 U	NA	NA	NA	2.0 U	NA	NA
	Acenaphthylene	10,000	40	NA	2.0 U	NA	NA	2.0 U	NA	NA	2.0 U	NA	NA	NA	2.0 U	NA	NA
	Anthracene	NS	30	NA	2.0 U	NA	NA	2.0 U	NA	NA	2.0 U	NA	NA	NA	2.0 U	NA	NA
	Benzo(a)anthracene	NS	1,000	NA	2.0 U	NA	NA	2.0 U	NA	NA	2.0 U	NA	NA	NA	2.0 U	NA	NA
	Benzo(a)pyrene	NS	500	NA	2.0 U	NA	NA	2.0 U	NA	NA	2.0 U	NA	NA	NA	2.0 U	NA	NA
	Benzo(b)fluoranthene	NS	400	NA	2.0 U	NA	NA	2.0 U	NA	NA	2.0 U	NA	NA	NA	2.0 U	NA	NA
	Benzo(g,h,i)perylene	NS	20	NA	2.0 U	NA	NA	2.0 U	NA	NA	2.0 U	NA	NA	NA	2.0 U	NA	NA
	Benzo(k)fluoranthene	NS	100	NA	2.0 U	NA	NA	2.0 U	NA	NA	2.0 U	NA	NA	NA	2.0 U	NA	NA
	Chrysene	NS	70	NA	2.0 U	NA	NA	2.0 U	NA	NA	2.0 U	NA	NA	NA	2.0 U	NA	NA
	Dibenz(a,h)anthracene	NS	40	NA	2.0 U	NA	NA	2.0 U	NA	NA	2.0 U	NA	NA	NA	2.0 U	NA	NA
	Fluoranthene	NS	200	NA	2.0 U	NA	NA	2.0 U	NA	NA	2.0 U	NA	NA	NA	2.0 U	NA	NA
	Fluorene	NS	40	NA	2.0 U	NA	NA	2.0 U	NA	NA	2.0 U	NA	NA	NA	2.0 U	NA	NA
	Indeno(1,2,3-cd)pyrene	NS	100	NA	2.0 U	NA	NA	2.0 U	NA	NA	2.0 U	NA	NA	NA	2.0 U	NA	NA
	2-Methylnaphthalene	2,000	20,000	NA	2.0 U	NA	NA	2.0 U	NA	NA	2.0 U	NA	NA	NA	2.0 U	NA	NA
	Naphthalene	1,000	20,000	NA	2.0 U	NA	NA	2.0 U	NA	NA	2.0 U	NA	NA	NA	2.0 U	NA	NA
	Phenanthrene	NS	10,000	NA	2.0 U	NA	NA	2.0 U	NA	NA	2.0 U	NA	NA	NA	2.0 U	NA	NA
	Pyrene	NS	20	NA	2.0 U	NA	NA	2.0 U	NA	NA	2.0 U	NA	NA	NA	2.0 U	NA	NA
PAHs																	
(ug/L)	Acenaphthene	NS	6,000	NA	0.30 U	NA	NA	0.30 U	NA	NA	0.30 U	NA	NA	NA	0.30 U	NA	NA
	Acenaphthylene	10,000	40	NA	0.30 U	NA	NA	0.30 U	NA	NA	0.30 U	NA	NA	NA	0.30 U	NA	NA
	Anthracene	NS	30	NA	0.20 U	NA	NA	0.20 U	NA	NA	0.20 U	NA	NA	NA	0.20 U	NA	NA
	Benzo(a)anthracene	NS	1,000	NA	0.050 U	NA	NA	0.050 U	NA	NA	0.050 U	NA	NA	NA	0.050 U	NA	NA
	Benzo(a)pyrene	NS	500	NA	0.10 U	NA	NA	0.10 U	NA	NA	0.10 U	NA	NA	NA	0.10 U	NA	NA
	Benzo(b)fluoranthene	NS	400	NA	0.050 U	NA	NA	0.050 U	NA	NA	0.050 U	NA	NA	NA	0.050 U	NA	NA
	Benzo(g,h,i)perylene	NS	20	NA	0.50 U	NA	NA	0.50 U	NA	NA	0.50 U	NA	NA	NA	0.50 U	NA	NA
	Benzo(k)fluoranthene	NS	100	NA	0.20 U	NA	NA	0.20 U	NA	NA	0.20 U	NA	NA	NA	0.20 U	NA	NA
	Chrysene	NS	70	NA	0.20 U	NA	NA	0.20 U	NA	NA	0.20 U	NA	NA	NA	0.20 U	NA	NA
	Dibenz(a,h)anthracene	NS	40	NA	0.20 U	NA	NA	0.20 U	NA	NA	0.20 U	NA	NA	NA	0.20 U	NA	NA
	Fluoranthene	NS	200	NA	0.50 U	NA	NA	0.50 U	NA	NA	0.50 U	NA	NA	NA	0.50 U	NA	NA
	Fluorene	NS	40	NA	1.0 U	NA	NA	1.0 U	NA	NA	1.0 U	NA	NA	NA	1.0 U	NA	NA
	Indeno(1,2,3-cd)pyrene	NS	100	NA	0.20 U	NA	NA	0.20 U	NA	NA	0.20 U	NA	NA	NA	0.20 U	NA	NA
	2-Methylnaphthalene	2,000	20,000	NA	1.0 U	NA	NA	1.0 U	NA	NA	1.0 U	NA	NA	NA	1.0 U	NA	NA
	Naphthalene	1,000	20,000	NA	1.0 U	NA	NA	1.0 U	NA	NA	1.0 U	NA	NA	NA	1.0 U	NA	NA
	Phenanthrene	NS	10,000	NA	0.050 U	NA	NA	0.050 U	NA	NA	0.050 U	NA	NA	NA	0.050 U	NA	NA
	Pyrene	NS	20	NA	1.0 U	NA	NA	1.0 U	NA	NA	1.0 U	NA	NA	NA	1.0 U	NA	NA
PCBs																	
(ug/L)	Aroclor 1016	5	10	1.0 U	0.0500 U	NA	NA	0.0500 U	NA	NA	0.0500 U	NA	NA	NA	0.0500 U	NA	NA
	Aroclor 1221	5	10	1.0 U	0.0500 U	NA	NA	0.0500 U	NA	NA	0.0500 U	NA	NA	NA	0.0500 U	NA	NA

Summary of Analytical Results for Basement Water Samples -- December 2009 and January 2010
New Bedford High School
New Bedford, Massachusetts

Analysis	Analyte		Sample ID:	NBHSBRM	BRM-S-1			BRM-S-2			BRM-S-3				FIP-S-1		
			Sample Date:	2/20/2009	12/2/2009	1/7/2010	1/30/2010	12/2/2009	1/7/2010	1/30/2010	12/2/2009	1/7/2010	1/30/2010	1/30/2010 Field Dup	12/2/2009	1/7/2010	1/30/2010
		GW-2	GW-3														
	Aroclor 1232	5	10	1.0 U	0.0500 U	NA	NA	0.0500 U	NA	NA	0.0500 U	NA	NA	NA	0.0500 U	NA	NA
	Aroclor 1242	5	10	1.0 U	0.0500 U	NA	NA	0.0500 U	NA	NA	0.0500 U	NA	NA	NA	0.0500 U	NA	NA
	Aroclor 1248	5	10	1.0 U	0.0500 U	NA	NA	0.0500 U	NA	NA	0.0500 U	NA	NA	NA	0.0500 U	NA	NA
	Aroclor 1254	5	10	1.0 U	0.0500 U	NA	NA	0.0500 U	NA	NA	0.0500 U	NA	NA	NA	0.0500 U	NA	NA
	Aroclor 1260	5	10	1.0 U	0.0500 U	NA	NA	0.0500 U	NA	NA	0.0500 U	NA	NA	NA	0.0500 U	NA	NA
	Total PCB Amount	5	10	1.0 U	0.0500 U	NA	NA	0.0500 U	NA	NA	0.0500 U	NA	NA	NA	0.0500 U	NA	NA
Metals, total																	
(ug/L)	Antimony	NS	8,000	40.0 U	40 U	NA	NA	40 U	NA	NA	40 U	NA	NA	NA	40 U	NA	NA
	Arsenic	NS	900	5.0 U	**9.2**	NA	NA	**11**	NA	NA	**10**	NA	NA	NA	**5.8**	NA	NA
	Barium	NS	50,000	**288**	**98**	NA	NA	**76**	NA	NA	**140**	NA	NA	NA	50 U	NA	NA
	Beryllium	NS	200	2.0 U	2.5 U	NA	NA	2.5 U	NA	NA	2.5 U	NA	NA	NA	2.5 U	NA	NA
	Cadmium	NS	4	**3.7**	2.5 U	NA	NA	2.5 U	NA	NA	2.5 U	NA	NA	NA	2.5 U	NA	NA
	Chromium	NS	300	**30.0**	5.0 U	NA	NA	5.0 U	NA	NA	5.0 U	NA	NA	NA	5.0 U	NA	NA
	Lead	NS	10	**50.8**	7.5 U	NA	NA	7.5 U	NA	NA	**220**	NA	NA	NA	7.5 U	NA	NA
	Mercury	NS	20	**0.36**	0.10 U	NA	NA	0.10 U	NA	NA	0.10 U	NA	NA	NA	0.10 U	NA	NA
	Nickel	NS	200	**26.0**	5.0 U	NA	NA	5.0 U	NA	NA	5.0 U	NA	NA	NA	5.0 U	NA	NA
	Selenium	NS	100	30.0 U	25 U	NA	NA	25 U	NA	NA	25 U	NA	NA	NA	25 U	NA	NA
	Silver	NS	7	3.0 U	2.5 U	NA	NA	2.5 U	NA	NA	2.5 U	NA	NA	NA	2.5 U	NA	NA
	Thallium	NS	3,000	30.0 U	30 U	NA	NA	30 U	NA	NA	30 U	NA	NA	NA	30 U	NA	NA
	Vanadium	NS	4,000	25.0 U	25 U	NA	NA	25 U	NA	NA	25 U	NA	NA	NA	25 U	NA	NA
	Zinc	NS	900	**1,870**	**260**	NA	NA	**51**	NA	NA	**150**	NA	NA	NA	**21**	NA	NA
Metals, dissolved																	
(ug/L)	Antimony	NS	8,000	NA	40 U	NA	NA	40 U	NA	NA	40 U	NA	NA	NA	40 U	NA	NA
	Arsenic	NS	900	NA	**6.5**	NA	NA	**8.9**	NA	NA	**8.4**	NA	NA	NA	**6.0**	NA	NA
	Barium	NS	50,000	NA	**79**	NA	NA	**73**	NA	NA	**67**	NA	NA	NA	50 U	NA	NA
	Beryllium	NS	200	NA	2.5 U	NA	NA	2.5 U	NA	NA	2.5 U	NA	NA	NA	2.5 U	NA	NA
	Cadmium	NS	4	NA	2.5 U	NA	NA	2.5 U	NA	NA	2.5 U	NA	NA	NA	2.5 U	NA	NA
	Chromium	NS	300	NA	5.0 U	NA	NA	5.0 U	NA	NA	5.0 U	NA	NA	NA	5.0 U	NA	NA
	Lead	NS	10	NA	7.5 U	NA	NA	7.5 U	NA	NA	7.5 U	NA	NA	NA	7.5 U	NA	NA
	Mercury	NS	20	NA	0.10 U	NA	NA	0.10 U	NA	NA	0.10 U	NA	NA	NA	0.10 U	NA	NA
	Nickel	NS	200	NA	5.0 U	NA	NA	5.0 U	NA	NA	5.0 U	NA	NA	NA	5.0 U	NA	NA
	Selenium	NS	100	NA	25 U	NA	NA	25 U	NA	NA	25 U	NA	NA	NA	25 U	NA	NA
	Silver	NS	7	NA	2.5 U	NA	NA	2.5 U	NA	NA	2.5 U	NA	NA	NA	2.5 U	NA	NA
	Thallium	NS	3,000	NA	30 U	NA	NA	30 U	NA	NA	30 U	NA	NA	NA	30 U	NA	NA
	Vanadium	NS	4,000	NA	25 U	NA	NA	25 U	NA	NA	25 U	NA	NA	NA	25 U	NA	NA
	Zinc	NS	900	NA	**160**	NA	NA	**43**	NA	NA	**48**	NA	NA	NA	**25**	NA	NA

Notes:

ug/L - micrograms per liter.

NA - Sample not analyzed for the listed analyte.

NS - No MassDEP standards exist for this compound.

U - Compound was not detected at specified quantitation limit.

Values in **Bold** indicate the compound was detected.

Values shown in Bold and shaded type exceed one or more of the listed MassDEP Method 1 standards

VOCs - Volatile Organic Compounds.

EPH - Extractable Petroleum Hydrocarbons.

PAHs - Polynuclear Aromatic Hydrocarbons.

PCBs - Polychlorinated Biphenyls.

(1) - MassDEP Method 1 standards for C9-C10 aromatic hydrocarbons used.

(2) - MassDEP Method 1 standards for 1,3-Dichloropropene used.

Summary of Analytical Results for Indoor Air Samples -- January 2010
New Bedford High School
New Bedford, Massachusetts

Analysis	Analyte	Risk Management Criteria				Sample ID: / Sample Date:	TRC-IA-1 1/31/2010	TRC-IA-2 1/31/2010	TRC-IA-3 1/31/2010	TRC-IA-4 1/31/2010	TRC-IA-5 1/31/2010
		HI = 0.2	HI = 1.0	ELCR = 1 x 10^{-6}	ELCR = 1 x 10^{-5}						
TO-15 (ug/m3)	1,1,1-Trichloroethane	1,100	5,500	NS	NS		1.09 U	1.09 U	1.09 U	1.09 U	1.09 U
	1,1,2,2-Tetrachloroethane	19	95	0.041	0.41		1.37 U	1.37 U	1.37 U	1.37 U	1.37 U
	1,1,2-Trichloroethane	15	75	0.15	1.5		1.09 U	1.09 U	1.09 U	1.09 U	1.09 U
	1,1-Dichloroethane	100	500	NS	NS		0.809 U	0.809 U	0.809 U	0.809 U	0.809 U
	1,1-Dichloroethene	40	200	NS	NS		0.792 U	0.792 U	0.792 U	0.792 U	0.792 U
	1,2,4-Trichlorobenzene	40	200	NS	NS		1.48 U	1.48 U	1.48 U	1.48 U	1.48 U
	1,2,4-Trimethylbenzene	10[a]	50[a]	NS	NS		0.982 U	0.982 U	0.982 U	0.982 U	**3.18**
	1,2-Dibromoethane	1.8	9	0.011	0.11		1.54 U	1.54 U	1.54 U	1.54 U	1.54 U
	1,2-Dichlorobenzene	40	200	NS	NS		1.20 U	1.20 U	1.20 U	1.20 U	1.20 U
	1,2-Dichloroethane	11	55	0.09	0.9		0.809 U	0.809 U	0.809 U	0.809 U	0.809 U
	1,2-Dichloropropane	0.8	4	0.13	1.3		0.924 U	0.924 U	0.924 U	0.924 U	0.924 U
	1,3,5-Trimethybenzene	10[a]	50[a]	NS	NS		0.982 U	0.982 U	0.982 U	0.982 U	0.982 U
	1,3-Dichlorobenzene	40	200	NS	NS		1.20 U	1.20 U	1.20 U	1.20 U	1.20 U
	1,4-Dichlorobenzene	160	800	0.35	3.5		1.20 U	1.20 U	1.20 U	1.20 U	1.20 U
	1,4-Dioxane	24	120	0.59	5.9		0.720 U	0.720 U	0.720 U	0.720 U	0.720 U
	2-Butanone	1,000	5,000	NS	NS		**1.01**	0.589 U	0.589 U	0.589 U	**1.89**
	2-Hexanone	NS	NS	NS	NS		0.819 U	0.819 U	0.819 U	0.819 U	0.819 U
	Acetone	160	800	NS	NS		**3.40**	**3.57**	**29.6**	**3.68**	2.37 U
	Benzene	6	30	0.3	3		**0.983**	0.638 U	0.638 U	0.638 U	**2.55**
	Bromodichloromethane	14	70	0.14	1.4		1.34 U	1.34 U	1.34 U	1.34 U	1.34 U
	Bromoform	14	70	2.2	22		2.06 U	2.06 U	2.06 U	2.06 U	2.06 U
	Bromomethane	1	5	NS	NS		0.776 U	0.776 U	0.776 U	0.776 U	0.776 U
	Carbon disulfide	NS	NS	NS	NS		0.622 U	0.622 U	0.622 U	0.622 U	0.622 U
	Carbon tetrachloride	86	430	0.16	1.6		1.26 U	1.26 U	1.26 U	1.26 U	1.26 U
	Chlorobenzene	4	20	NS	NS		0.920 U	0.920 U	0.920 U	0.920 U	0.920 U
	Chloroethane	NS	NS	NS	NS		0.527 U	0.527 U	0.527 U	0.527 U	0.527 U
	Chloroform	130	650	0.11	1.1		0.976 U	0.976 U	0.976 U	0.976 U	0.976 U
	Chloromethane	NS	NS	NS	NS		**1.11**	**1.03**	**0.92**	**1.16**	**1.29**
	cis-1,2-Dichloroethene	7	35	NS	NS		**4.33**	**0.087**	0.079 U	0.079 U	**3.58**
	cis-1,3-Dichloropropene	4	20	0.6	6		0.907 U	0.907 U	0.907 U	0.907 U	0.907 U
	Dibromochloromethane	14	70	0.1	1		1.70 U	1.70 U	1.70 U	1.70 U	1.70 U
	Dichlorodifluoromethane	NS	NS	NS	NS		**2.00**	**2.02**	**2.08**	**2.13**	**3.36**
	Ethylbenzene	200	1,000	NS	NS		0.868 U	0.868 U	**3.06**	0.868 U	**1.80**
	Hexachlorobutadiene	0.14	0.7	0.11	1.1		2.13 U	2.13 U	2.13 U	2.13 U	2.13 U
	Methylene chloride	600	3,000	5	50		1.74 U	1.74 U	1.74 U	1.74 U	1.74 U
	4-Methyl-2-pentanone	600	3,000	NS	NS		0.819 U	0.819 U	0.819 U	0.819 U	**1.21**
	Methyl tert butyl ether	600	3,000	NS	NS		0.720 U	0.720 U	0.720 U	0.720 U	0.720 U
	p/m-Xylene	20	100	NS	NS		1.74 U	1.74 U	**9.61**	1.74 U	**7.55**
	o-Xylene	20	100	NS	NS		0.868 U	0.868 U	**2.03**	0.868 U	**2.44**
	Styrene	200	1,000	4.1	41		0.851 U	0.851 U	0.851 U	0.851 U	0.851 U

Summary of Analytical Results for Indoor Air Samples -- January 2010
New Bedford High School
New Bedford, Massachusetts

Analysis	Analyte	Risk Management Criteria				Sample ID: / Sample Date:	TRC-IA-1 1/31/2010	TRC-IA-2 1/31/2010	TRC-IA-3 1/31/2010	TRC-IA-4 1/31/2010	TRC-IA-5 1/31/2010
		HI = 0.2	HI = 1.0	ELCR = 1 x 10^{-6}	ELCR = 1 x 10^{-5}						
	Tetrachloroethene	920	4,600	0.23	2.3		0.136 U	0.136 U	0.136 U	0.136 U	0.136 U
	Tetrahydrofuran	NS	NS	NS	NS		0.589 U	0.589 U	0.589 U	0.589 U	0.589 U
	Toluene	1,000	5,000	NS	NS		**1.97**	0.753 U	**4.18**	0.753 U	**13.1**
	trans-1,2-Dichloroethene	14	70	NS	NS		**2.38**	0.079 U	0.079 U	0.079 U	**1.72**
	trans-1,3-Dichloropropene	4	20	0.6	6		0.907 U	0.907 U	0.907 U	0.907 U	0.907 U
	Trichloroethene	36	180	1.4	14		**2.20**	0.107 U	0.107 U	0.107 U	**1.12**
	Trichlorofluoromethane	NS	NS	NS	NS		1.12 U	1.12 U	1.12 U	1.12 U	**4.92**
	Vinyl chloride	20	100	0.27	2.7		**0.57**	0.051 U	0.051 U	0.051 U	**0.531**
	Naphthalene	0.61	3.05	NS	NS		1.05 U	1.05 U	1.05 U	1.05 U	1.05 U
	1,1,1,2-Tetrachloroethane	NS	NS	NS	NS		1.37 U	1.37 U	1.37 U	1.37 U	1.37 U
	Isopropylbenzene	10[a]	50[a]	NS	NS		0.982 U	0.982 U	0.982 U	0.982 U	0.982 U
	1,2,3-Trichloropropane	NS	NS	NS	NS		1.20 U	1.20 U	1.20 U	1.20 U	1.20 U
	Bromobenzene	NS	NS	NS	NS		1.28 U	1.28 U	1.28 U	1.28 U	1.28 U
	Dibromomethane	NS	NS	NS	NS		1.42 U	1.42 U	1.42 U	1.42 U	1.42 U
	tert-Amyl Methyl Ether	NS	NS	NS	NS		0.835 U	0.835 U	0.835 U	0.835 U	0.835 U
	2-Chlorotoluene	NS	NS	NS	NS		1.03 U	1.03 U	1.03 U	1.03 U	1.03 U
	4-Chlorotoluene	NS	NS	NS	NS		1.03 U	1.03 U	1.03 U	1.03 U	1.03 U
	2,2-Dichloropropane	NS	NS	NS	NS		0.923 U	0.923 U	0.923 U	0.923 U	0.923 U
	1,1-Dichloropropene	NS	NS	NS	NS		0.907 U	0.907 U	0.907 U	0.907 U	0.907 U
	Diisopropyl ether	NS	NS	NS	NS		0.835 U	0.835 U	0.835 U	0.835 U	0.835 U
	tert-Butyl Ethyl Ether	NS	NS	NS	NS		0.835 U	0.835 U	0.835 U	0.835 U	0.835 U
	1,2,3-Trichlorobenzene	NS	NS	NS	NS		1.48 U	1.48 U	1.48 U	1.48 U	1.48 U
	Ethyl ether	NS	NS	NS	NS		0.606 U	0.606 U	0.606 U	0.606 U	0.606 U
	n-Butylbenzene	10[a]	50[a]	NS	NS		1.10 U	1.10 U	1.10 U	1.10 U	1.10 U
	sec-Butylbenzene	10[a]	50[a]	NS	NS		1.10 U	1.10 U	1.10 U	1.10 U	1.10 U
	tert-Butylbenzene	10[a]	50[a]	NS	NS		1.10 U	1.10 U	1.10 U	1.10 U	1.10 U
	1,2-Dibromo-3-chloropropane	NS	NS	NS	NS		1.93 U	1.93 U	1.93 U	1.93 U	1.93 U
	p-Isopropyltoluene	10[a]	50[a]	NS	NS		1.10 U	1.10 U	1.10 U	1.10 U	1.10 U
	n-Propylbenzene	10[a]	50[a]	NS	NS		0.982 U	0.982 U	0.982 U	0.982 U	0.982 U
	1,3-Dichloropropane	NS	NS	NS	NS		0.923 U	0.923 U	0.923 U	0.923 U	0.923 U

Notes:

ug/m3 - micrograms per cubic meter.

NS - No risk management criteria exist for this compound.

U - Compound was not detected at specified quantitation limit.

Values in Bold indicate the compound was detected.

Values shown in Bold and shaded type exceed one or more of the listed criteria.

TO - Toxic organics.

ELCR - Excess lifetime cancer risk.

HI - Hazard index.

Risk Management Criteria - MassDEP Indoor Air Threshold Values for the Evaluation of a Vapor Intrusion Pathway, Attachment C, updated June 26, 2008.

(a) - The risk management criteria for C9-C10 aromatics used.

Summary of Analytical Results for Storm Sewer Samples – February 2010
New Bedford High School
New Bedford, Massachusetts

Analysis	Analyte	Sample ID:		HS-D-1		HS-D-2	HS-D-3	HS-D-4	HS-D-5	HS-D-6	HS-D-7	HS-D-8	HS-D-9	HS-ST-1
		Sample Date:		2/3/2010	2/3/2010	2/3/2010	2/3/2010	2/3/2010	2/3/2010	2/3/2010	2/3/2010	2/3/2010	2/3/2010	2/3/2010
		GW-2	GW-3		Field Dup									
VOCs														
(ug/L)	Acetone	50,000	50,000	100 U	100 U	100 U	100 U	100 U	100 U	100 U	100 U	100 U	100 U	100 U
	tert-Amyl Methyl Ether (TAME)	NS	NS	0.50 U	0.50 U	0.50 U	0.50 U	0.50 U	0.50 U	0.50 U	0.50 U	0.50 U	0.50 U	0.50 U
	Benzene	2,000	10,000	1.0 U	1.0 U	1.0 U	1.0 U	1.0 U	1.0 U	1.0 U	1.0 U	1.0 U	1.0 U	1.0 U
	Bromobenzene	NS	NS	1.0 U	1.0 U	1.0 U	1.0 U	1.0 U	1.0 U	1.0 U	1.0 U	1.0 U	1.0 U	1.0 U
	Bromochloromethane	NS	NS	1.0 U	1.0 U	1.0 U	1.0 U	1.0 U	1.0 U	1.0 U	1.0 U	1.0 U	1.0 U	1.0 U
	Bromodichloromethane	6	50,000	5.0 U	5.0 U	5.0 U	5.0 U	5.0 U	5.0 U	5.0 U	5.0 U	5.0 U	5.0 U	5.0 U
	Bromoform	700	50,000	5.0 U	5.0 U	5.0 U	5.0 U	5.0 U	5.0 U	5.0 U	5.0 U	5.0 U	5.0 U	5.0 U
	Bromomethane	7	800	2.0 U	2.0 U	2.0 U	2.0 U	2.0 U	2.0 U	2.0 U	2.0 U	2.0 U	2.0 U	2.0 U
	2-Butanone (MEK)	50,000	50,000	20 U	20 U	20 U	20 U	20 U	20 U	20 U	20 U	20 U	20 U	20 U
	n-Butylbenzene	7,000[1]	50,000[1]	1.0 U	1.0 U	1.0 U	1.0 U	1.0 U	1.0 U	1.0 U	1.0 U	1.0 U	1.0 U	1.0 U
	sec-Butylbenzene	7,000[1]	50,000[1]	1.0 U	1.0 U	1.0 U	1.0 U	1.0 U	1.0 U	1.0 U	1.0 U	1.0 U	1.0 U	1.0 U
	tert-Butylbenzene	7,000[1]	50,000[1]	1.0 U	1.0 U	1.0 U	1.0 U	1.0 U	1.0 U	1.0 U	1.0 U	1.0 U	1.0 U	1.0 U
	tert-Butyl Ethyl Ether (TBEE)	NS	NS	0.50 U	0.50 U	0.50 U	0.50 U	0.50 U	0.50 U	0.50 U	0.50 U	0.50 U	0.50 U	0.50 U
	Carbon Disulfide	NS	NS	50 U	50 U	50 U	50 U	50 U	50 U	50 U	50 U	50 U	50 U	50 U
	Carbon Tetrachloride	2	5,000	5.0 U	5.0 U	5.0 U	5.0 U	5.0 U	5.0 U	5.0 U	5.0 U	5.0 U	5.0 U	5.0 U
	Chlorobenzene	200	1,000	1.0 U	1.0 U	1.0 U	1.0 U	1.0 U	1.0 U	1.0 U	1.0 U	1.0 U	1.0 U	1.0 U
	Chlorodibromomethane	20	50,000	5.0 U	5.0 U	5.0 U	5.0 U	5.0 U	5.0 U	5.0 U	5.0 U	5.0 U	5.0 U	5.0 U
	Chloroethane	NS	NS	2.0 U	2.0 U	2.0 U	2.0 U	2.0 U	2.0 U	2.0 U	2.0 U	2.0 U	2.0 U	2.0 U
	Chloroform	50	20,000	2.0 U	2.0 U	2.0 U	2.0 U	2.0 U	**3.0**	2.0 U	2.0 U	2.0 U	2.0 U	2.0 U
	Chloromethane	NS	NS	2.0 U	2.0 U	2.0 U	2.0 U	2.0 U	2.0 U	2.0 U	2.0 U	2.0 U	2.0 U	2.0 U
	2-Chlorotoluene	NS	NS	1.0 U	1.0 U	1.0 U	1.0 U	1.0 U	1.0 U	1.0 U	1.0 U	1.0 U	1.0 U	1.0 U
	4-Chlorotoluene	NS	NS	1.0 U	1.0 U	1.0 U	1.0 U	1.0 U	1.0 U	1.0 U	1.0 U	1.0 U	1.0 U	1.0 U
	1,2-Dibromo-3-chloropropane (DBCP	NS	NS	5.0 U	5.0 U	5.0 U	5.0 U	5.0 U	5.0 U	5.0 U	5.0 U	5.0 U	5.0 U	5.0 U
	1,2-Dibromoethane (EDB)	2	50,000	0.50 U	0.50 U	0.50 U	0.50 U	0.50 U	0.50 U	0.50 U	0.50 U	0.50 U	0.50 U	0.50 U
	Dibromomethane	NS	NS	1.0 U	1.0 U	1.0 U	1.0 U	1.0 U	1.0 U	1.0 U	1.0 U	1.0 U	1.0 U	1.0 U
	1,2-Dichlorobenzene	2,000	2,000	1.0 U	1.0 U	1.0 U	1.0 U	1.0 U	1.0 U	1.0 U	1.0 U	1.0 U	1.0 U	1.0 U
	1,3-Dichlorobenzene	2,000	50,000	1.0 U	1.0 U	1.0 U	1.0 U	1.0 U	1.0 U	1.0 U	1.0 U	1.0 U	1.0 U	1.0 U
	1,4-Dichlorobenzene	200	8,000	1.0 U	1.0 U	1.0 U	1.0 U	1.0 U	1.0 U	1.0 U	1.0 U	1.0 U	1.0 U	1.0 U
	Dichlorodifluoromethane (Freon 12)	NS	NS	2.0 U	2.0 U	2.0 U	2.0 U	2.0 U	2.0 U	2.0 U	2.0 U	2.0 U	2.0 U	2.0 U
	1,1-Dichloroethane	1,000	20,000	1.0 U	1.0 U	1.0 U	1.0 U	1.0 U	1.0 U	1.0 U	1.0 U	1.0 U	1.0 U	1.0 U
	1,2-Dichloroethane	5	20,000	1.0 U	1.0 U	1.0 U	1.0 U	1.0 U	1.0 U	1.0 U	1.0 U	1.0 U	1.0 U	1.0 U
	1,1-Dichloroethylene	80	30,000	1.0 U	1.0 U	1.0 U	1.0 U	1.0 U	1.0 U	1.0 U	1.0 U	1.0 U	1.0 U	1.0 U
	cis-1,2-Dichloroethylene	100	50,000	1.0 U	1.0 U	1.0 U	1.0 U	1.0 U	**1.0**	1.0 U	1.0 U	1.0 U	1.0 U	1.0 U
	trans-1,2-Dichloroethylene	90	50,000	1.0 U	1.0 U	1.0 U	1.0 U	1.0 U	1.0 U	1.0 U	1.0 U	1.0 U	1.0 U	1.0 U
	1,2-Dichloropropane	3	50,000	1.0 U	1.0 U	1.0 U	1.0 U	1.0 U	1.0 U	1.0 U	1.0 U	1.0 U	1.0 U	1.0 U
	1,3-Dichloropropane	NS	NS	0.50 U	0.50 U	0.50 U	0.50 U	0.50 U	0.50 U	0.50 U	0.50 U	0.50 U	0.50 U	0.50 U
	2,2-Dichloropropane	NS	NS	1.0 U	1.0 U	1.0 U	1.0 U	1.0 U	1.0 U	1.0 U	1.0 U	1.0 U	1.0 U	1.0 U
	1,1-Dichloropropene	NS	NS	2.0 U	2.0 U	2.0 U	2.0 U	2.0 U	2.0 U	2.0 U	2.0 U	2.0 U	2.0 U	2.0 U
	cis-1,3-Dichloropropene	10[2]	200[2]	1.0 U	1.0 U	1.0 U	1.0 U	1.0 U	1.0 U	1.0 U	1.0 U	1.0 U	1.0 U	1.0 U
	trans-1,3-Dichloropropene	10[2]	200[2]	5.0 U	5.0 U	5.0 U	5.0 U	5.0 U	5.0 U	5.0 U	5.0 U	5.0 U	5.0 U	5.0 U
	Diethyl Ether	NS	NS	2.0 U	2.0 U	2.0 U	2.0 U	2.0 U	2.0 U	2.0 U	2.0 U	2.0 U	2.0 U	2.0 U
	Diisopropyl Ether (DIPE)	NS	NS	20 U	20 U	20 U	20 U	20 U	20 U	20 U	20 U	20 U	20 U	20 U
	1,4-Dioxane	6,000	50,000	50 U	50 U	50 U	50 U	50 U	50 U	50 U	50 U	50 U	50 U	50 U

Summary of Analytical Results for Storm Sewer Samples -- February 2010
New Bedford High School
New Bedford, Massachusetts

Analysis	Analyte		Sample ID:	HS-D-1		HS-D-2	HS-D-3	HS-D-4	HS-D-5	HS-D-6	HS-D-7	HS-D-8	HS-D-9	HS-ST-1
			Sample Date:	2/3/2010	2/3/2010	2/3/2010	2/3/2010	2/3/2010	2/3/2010	2/3/2010	2/3/2010	2/3/2010	2/3/2010	2/3/2010
		GW-2	GW-3		Field Dup									
	Ethylbenzene	20,000	5,000	1.0 U	1.0 U	1.0 U	1.0 U	1.0 U	1.0 U	1.0 U	1.0 U	1.0 U	1.0 U	1.0 U
	Hexachlorobutadiene	1	3,000	1.0 U	1.0 U	1.0 U	1.0 U	1.0 U	1.0 U	1.0 U	1.0 U	1.0 U	1.0 U	1.0 U
	2-Hexanone (MBK)	NS	NS	10 U	10 U	10 U	10 U	10 U	10 U	10 U	10 U	10 U	10 U	10 U
	Isopropylbenzene (Cumene)	7,000(1)	50,000(1)	1.0 U	1.0 U	1.0 U	1.0 U	1.0 U	1.0 U	1.0 U	1.0 U	1.0 U	1.0 U	1.0 U
	p-Isopropyltoluene (p-Cymene)	7,000(1)	50,000(1)	1.0 U	1.0 U	1.0 U	1.0 U	1.0 U	1.0 U	1.0 U	1.0 U	1.0 U	1.0 U	1.0 U
	Methyl tert-Butyl Ether (MTBE)	50,000	50,000	1.0 U	1.0 U	1.0 U	1.0 U	1.0 U	1.0 U	1.0 U	1.0 U	1.0 U	1.0 U	1.0 U
	Methylene Chloride	10,000	50,000	5.0 U	5.0 U	5.0 U	5.0 U	5.0 U	5.0 U	5.0 U	5.0 U	5.0 U	5.0 U	5.0 U
	4-Methyl-2-pentanone (MIBK)	50,000	50,000	10 U	10 U	10 U	10 U	10 U	10 U	10 U	10 U	10 U	10 U	10 U
	Naphthalene	1,000	20,000	5.0 U	5.0 U	5.0 U	5.0 U	5.0 U	5.0 U	5.0 U	5.0 U	5.0 U	5.0 U	5.0 U
	n-Propylbenzene	7,000(1)	50,000(1)	1.0 U	1.0 U	1.0 U	1.0 U	1.0 U	1.0 U	1.0 U	1.0 U	1.0 U	1.0 U	1.0 U
	Styrene	100	6,000	1.0 U	1.0 U	1.0 U	1.0 U	1.0 U	1.0 U	1.0 U	1.0 U	1.0 U	1.0 U	1.0 U
	1,1,1,2-Tetrachloroethane	10	50,000	5.0 U	5.0 U	5.0 U	5.0 U	5.0 U	5.0 U	5.0 U	5.0 U	5.0 U	5.0 U	5.0 U
	1,1,2,2-Tetrachloroethane	9	50,000	0.50 U	0.50 U	0.50 U	0.50 U	0.50 U	0.50 U	0.50 U	0.50 U	0.50 U	0.50 U	0.50 U
	Tetrachloroethylene	50	30,000	1.0 U	1.0 U	1.0 U	1.0 U	1.0 U	1.0 U	1.0 U	1.0 U	1.0 U	1.0 U	1.0 U
	Tetrahydrofuran	NS	NS	10 U	10 U	10 U	10 U	10 U	10 U	10 U	10 U	10 U	10 U	10 U
	Toluene	50,000	40,000	1.0 U	1.0 U	1.0 U	1.0 U	1.0 U	1.0 U	1.0 U	1.0 U	1.0 U	1.0 U	1.0 U
	1,2,3-Trichlorobenzene	NS	NS	5.0 U	5.0 U	5.0 U	5.0 U	5.0 U	5.0 U	5.0 U	5.0 U	5.0 U	5.0 U	5.0 U
	1,2,4-Trichlorobenzene	2,000	50,000	1.0 U	1.0 U	1.0 U	1.0 U	1.0 U	1.0 U	1.0 U	1.0 U	1.0 U	1.0 U	1.0 U
	1,1,1-Trichloroethane	4,000	20,000	1.0 U	1.0 U	1.0 U	1.0 U	1.0 U	**3.3**	1.0 U	1.0 U	1.0 U	1.0 U	1.0 U
	1,1,2-Trichloroethane	900	50,000	1.0 U	1.0 U	1.0 U	1.0 U	1.0 U	1.0 U	1.0 U	1.0 U	1.0 U	1.0 U	1.0 U
	Trichloroethylene	30	5,000	1.0 U	1.0 U	1.0 U	1.0 U	1.0 U	1.0 U	1.0 U	1.0 U	1.0 U	1.0 U	1.0 U
	Trichlorofluoromethane (Freon 11)	NS	NS	2.0 U	2.0 U	2.0 U	2.0 U	2.0 U	2.0 U	2.0 U	2.0 U	2.0 U	2.0 U	2.0 U
	1,2,3-Trichloropropane	NS	NS	2.0 U	2.0 U	2.0 U	2.0 U	2.0 U	2.0 U	2.0 U	2.0 U	2.0 U	2.0 U	2.0 U
	1,2,4-Trimethylbenzene	7,000(1)	50,000(1)	1.0 U	1.0 U	1.0 U	1.0 U	1.0 U	1.0 U	1.0 U	1.0 U	1.0 U	1.0 U	1.0 U
	1,3,5-Trimethylbenzene	7,000(1)	50,000(1)	1.0 U	1.0 U	1.0 U	1.0 U	1.0 U	1.0 U	1.0 U	1.0 U	1.0 U	1.0 U	1.0 U
	Vinyl Chloride	2	50,000	2.0 U	2.0 U	2.0 U	2.0 U	2.0 U	2.0 U	2.0 U	2.0 U	2.0 U	2.0 U	2.0 U
	m+p Xylene	9,000	5,000	2.0 U	2.0 U	2.0 U	2.0 U	2.0 U	2.0 U	2.0 U	2.0 U	2.0 U	2.0 U	2.0 U
	o-Xylene	9,000	5,000	1.0 U	1.0 U	1.0 U	1.0 U	1.0 U	1.0 U	1.0 U	1.0 U	1.0 U	1.0 U	1.0 U

Notes:

ug/L - micrograms per liter.

NS - No MassDEP standards exist for this compound.

U - Compound was not detected at specified quantitation limit.

Values in **Bold** indicate the compound was detected.

VOCs - Volatile Organic Compounds.

(1) - MassDEP Method 1 standards for C9-C10 aromatic hydrocarbons used.

(2) - MassDEP Method 1 standards for 1,3-Dichloropropene used.

Summary of Analytical Results for Sanitary Sewer Samples -- February 2010
New Bedford High School
New Bedford, Massachusetts

Analysis	Sample ID: / Sample Date: / Analyte	LS-MH-1 2/17/2010	SS-MH-1 2/17/2010	SS-MH-2 2/17/2010	SS-MH-3 2/17/2010	SS-MH-4 2/17/2010	SS-MH-4 2/17/2010 Field Dup
VOCs							
(ug/L)	Acetone	**630**	500 U	50 U	50 U	50 U	50 U
	tert-Amyl Methyl Ether (TAME)	0.50 U	5.0 U	0.50 U	0.50 U	0.50 U	0.50 U
	Benzene	1.0 U	10 U	1.0 U	1.0 U	1.0 U	1.0 U
	Bromobenzene	1.0 U	10 U	1.0 U	1.0 U	1.0 U	1.0 U
	Bromochloromethane	1.0 U	10 U	1.0 U	1.0 U	1.0 U	1.0 U
	Bromodichloromethane	1.0 U	10 U	5.0 U	1.0 U	**1.3**	1.0 U
	Bromoform	10 U	100 U	10 U	10 U	10 U	10 U
	Bromomethane	5.0 U	50 U	10 U	5.0 U	5.0 U	5.0 U
	2-Butanone (MEK)	20 U	200 U	20 U	20 U	20 U	20 U
	n-Butylbenzene	1.0 U	10 U	1.0 U	1.0 U	1.0 U	1.0 U
	sec-Butylbenzene	1.0 U	10 U	1.0 U	1.0 U	1.0 U	1.0 U
	tert-Butylbenzene	1.0 U	10 U	1.0 U	1.0 U	1.0 U	1.0 U
	tert-Butyl Ethyl Ether (TBEE)	0.50 U	5.0 U	0.50 U	0.50 U	0.50 U	0.50 U
	Carbon Disulfide	2.0 U	20 U	50 U	2.0 U	2.0 U	2.0 U
	Carbon Tetrachloride	1.0 U	10 U	10 U	1.0 U	1.0 U	1.0 U
	Chlorobenzene	1.0 U	10 U	1.0 U	1.0 U	1.0 U	1.0 U
	Chlorodibromomethane	5.0 U	50 U	5.0 U	5.0 U	5.0 U	5.0 U
	Chloroethane	2.0 U	20 U	2.0 U	2.0 U	2.0 U	2.0 U
	Chloroform	2.0 U	20 U	**7.8**	2.0 U	**7.8**	2.0 U
	Chloromethane	2.0 U	20 U	2.0 U	2.0 U	2.0 U	2.0 U
	2-Chlorotoluene	1.0 U	10 U	1.0 U	1.0 U	1.0 U	1.0 U
	4-Chlorotoluene	1.0 U	10 U	1.0 U	1.0 U	1.0 U	1.0 U
	1,2-Dibromo-3-chloropropane (DBCP)	5.0 U	50 U	10 U	5.0 U	5.0 U	5.0 U
	1,2-Dibromoethane (EDB)	0.50 U	5.0 U	0.50 U	0.50 U	0.50 U	0.50 U
	Dibromomethane	1.0 U	10 U	1.0 U	1.0 U	1.0 U	1.0 U
	1,2-Dichlorobenzene	1.0 U	10 U	1.0 U	1.0 U	1.0 U	1.0 U
	1,3-Dichlorobenzene	1.0 U	10 U	1.0 U	1.0 U	1.0 U	1.0 U
	1,4-Dichlorobenzene	**19**	10 U	1.0 U	1.0 U	1.0 U	1.0 U
	Dichlorodifluoromethane (Freon 12)	2.0 U	20 U	2.0 U	2.0 U	2.0 U	2.0 U
	1,1-Dichloroethane	1.0 U	10 U	1.0 U	1.0 U	1.0 U	1.0 U
	1,2-Dichloroethane	1.0 U	10 U	1.0 U	1.0 U	1.0 U	1.0 U
	1,1-Dichloroethylene	1.0 U	10 U	1.0 U	1.0 U	1.0 U	1.0 U
	cis-1,2-Dichloroethylene	1.0 U	10 U	1.0 U	**3.1**	1.0 U	**2.6**
	trans-1,2-Dichloroethylene	1.0 U	10 U	1.0 U	**1.4**	1.0 U	**1.2**
	1,2-Dichloropropane	1.0 U	10 U	1.0 U	1.0 U	1.0 U	1.0 U
	1,3-Dichloropropane	0.50 U	5.0 U	0.50 U	0.50 U	0.50 U	0.50 U
	2,2-Dichloropropane	1.0 U	10 U	10 U	1.0 U	1.0 U	1.0 U
	1,1-Dichloropropene	2.0 U	20 U	2.0 U	2.0 U	2.0 U	2.0 U

Summary of Analytical Results for Sanitary Sewer Samples -- February 2010
New Bedford High School
New Bedford, Massachusetts

Analysis	Sample ID: / Sample Date: / Analyte	LS-MH-1 2/17/2010	SS-MH-1 2/17/2010	SS-MH-2 2/17/2010	SS-MH-3 2/17/2010	SS-MH-4 2/17/2010	SS-MH-4 2/17/2010 Field Dup
	cis-1,3-Dichloropropene	0.50 U	5.0 U	5.0 U	0.50 U	0.50 U	0.50 U
	trans-1,3-Dichloropropene	0.50 U	5.0 U	5.0 U	0.50 U	0.50 U	0.50 U
	Diethyl Ether	2.0 U	20 U	2.0 U	2.0 U	2.0 U	2.0 U
	Diisopropyl Ether (DIPE)	0.50 U	5.0 U	0.50 U	0.50 U	0.50 U	0.50 U
	1,4-Dioxane	50 U	500 U	50 U	50 U	50 U	50 U
	Ethylbenzene	1.0 U	10 U	1.0 U	1.0 U	1.0 U	1.0 U
	Hexachlorobutadiene	5.0 U	50 U	1.0 U	5.0 U	5.0 U	5.0 U
	2-Hexanone (MBK)	10 U	100 U	10 U	10 U	10 U	10 U
	Isopropylbenzene (Cumene)	1.0 U	10 U	1.0 U	1.0 U	1.0 U	1.0 U
	p-Isopropyltoluene (p-Cymene)	1.0 U	10 U	1.0 U	1.0 U	1.0 U	1.0 U
	Methyl tert-Butyl Ether (MTBE)	1.0 U	10 U	1.0 U	1.0 U	1.0 U	1.0 U
	Methylene Chloride	20 U	200 U	5.0 U	20 U	20 U	20 U
	4-Methyl-2-pentanone (MIBK)	10 U	100 U	10 U	10 U	10 U	10 U
	Naphthalene	5.0 U	50 U	2.0 U	5.0 U	5.0 U	5.0 U
	n-Propylbenzene	1.0 U	10 U	1.0 U	1.0 U	1.0 U	1.0 U
	Styrene	1.0 U	10 U	1.0 U	1.0 U	1.0 U	1.0 U
	1,1,1,2-Tetrachloroethane	1.0 U	10 U	5.0 U	1.0 U	1.0 U	1.0 U
	1,1,2,2-Tetrachloroethane	0.50 U	5.0 U	0.50 U	0.50 U	0.50 U	0.50 U
	Tetrachloroethylene	1.0 U	10 U	1.0 U	1.0 U	1.0 U	1.0 U
	Tetrahydrofuran	10 U	100 U	10 U	10 U	10 U	10 U
	Toluene	**3.3**	10 U	1.0 U	1.0 U	1.0 U	1.0 U
	1,2,3-Trichlorobenzene	5.0 U	50 U	5.0 U	5.0 U	5.0 U	5.0 U
	1,2,4-Trichlorobenzene	5.0 U	50 U	1.0 U	5.0 U	5.0 U	5.0 U
	1,1,1-Trichloroethane	1.0 U	10 U	5.0 U	1.0 U	1.0 U	1.0 U
	1,1,2-Trichloroethane	1.0 U	10 U	1.0 U	1.0 U	1.0 U	1.0 U
	Trichloroethylene	1.0 U	10 U	1.0 U	1.0 U	1.0 U	1.0 U
	Trichlorofluoromethane (Freon 11)	2.0 U	20 U	2.0 U	2.0 U	2.0 U	2.0 U
	1,2,3-Trichloropropane	2.0 U	20 U	2.0 U	2.0 U	2.0 U	2.0 U
	1,2,4-Trimethylbenzene	1.0 U	10 U	1.0 U	1.0 U	1.0 U	1.0 U
	1,3,5-Trimethylbenzene	1.0 U	10 U	1.0 U	1.0 U	1.0 U	1.0 U
	Vinyl Chloride	2.0 U	20 U	2.0 U	2.0 U	2.0 U	2.0 U
	m+p Xylene	2.0 U	20 U	2.0 U	2.0 U	2.0 U	2.0 U
	o-Xylene	1.0 U	10 U	1.0 U	1.0 U	1.0 U	1.0 U

Notes:

ug/L - micrograms per liter.

U - Compound was not detected at specified quantitation limit.

Values in Bold indicate the compound was detected.

VOCs - Volatile Organic Compounds.

Summary of Analytical Results for Soil Gas Samples – February 2010
New Bedford High School
New Bedford, Massachusetts

Analysis	Sample ID: / Sample Date: / Analyte	TVP-1 2/15/2010	TVP-2 2/15/2010	TVP-3 2/15/2010	TVP-4 2/15/2010	TVP-5 2/15/2010	TVP-6 2/15/2010	TVP-7 2/15/2010	TVP-8 2/15/2010	TVP-9 2/15/2010	TVP-9 2/15/2010 Field Dup	TVP-10 2/15/2010	TVP-11 2/15/2010
TO-15													
(ug/m3)	1,1,1-Trichloroethane	10.9 U	1.09 U	2.72 U	1.09 U	1.09 U	1.09 U	1.09 U	1.09 U	1.09 U	1.09 U	**12.7**	10.9 U
	1,1,2,2-Tetrachloroethane	13.7 U	1.37 U	3.43 U	1.37 U	1.37 U	1.37 U	1.37 U	1.37 U	1.37 U	1.37 U	1.37 U	13.7 U
	1,1,2-Trichloroethane	10.9 U	1.09 U	2.72 U	1.09 U	1.09 U	1.09 U	1.09 U	1.09 U	1.09 U	1.09 U	1.09 U	10.9 U
	1,1-Dichloroethane	8.09 U	0.809 U	2.02 U	0.809 U	0.809 U	0.809 U	0.809 U	0.809 U	0.809 U	0.809 U	0.809 U	8.09 U
	1,1-Dichloroethene	7.92 U	0.792 U	1.98 U	0.792 U	0.792 U	0.792 U	0.792 U	0.792 U	0.792 U	0.792 U	**2.20**	7.92 U
	1,2,4-Trichlorobenzene	14.8 U	1.48 U	3.71 U	1.48 U	1.48 U	1.48 U	1.48 U	1.48 U	1.48 U	1.48 U	1.48 U	14.8 U
	1,2,4-Trimethylbenzene	9.82 U	**1.78**	2.46 U	0.982 U	0.982 U	0.982 U	0.982 U	0.982 U	**7.24**	**1.86**	**16.1**	9.82 U
	1,2-Dibromoethane	15.4 U	1.54 U	3.84 U	1.54 U	1.54 U	1.54 U	1.54 U	1.54 U	1.54 U	1.54 U	1.54 U	15.4 U
	1,2-Dichlorobenzene	12.0 U	1.20 U	3.00 U	1.20 U	1.20 U	1.20 U	1.20 U	1.20 U	1.20 U	1.20 U	1.20 U	12.0 U
	1,2-Dichloroethane	8.09 U	0.809 U	2.02 U	0.809 U	0.809 U	0.809 U	0.809 U	0.809 U	0.809 U	0.809 U	0.809 U	8.09 U
	1,2-Dichloropropane	9.24 U	0.924 U	2.31 U	0.924 U	0.924 U	0.924 U	0.924 U	0.924 U	0.924 U	0.924 U	0.924 U	9.24 U
	1,3,5-Trimethybenzene	9.82 U	0.982 U	2.46 U	0.982 U	0.982 U	0.982 U	0.982 U	0.982 U	**1.39**	0.982 U	**3.19**	9.82 U
	1,3-Dichlorobenzene	12.0 U	1.20 U	3.00 U	1.20 U	1.20 U	1.20 U	1.20 U	1.20 U	1.20 U	1.20 U	1.20 U	12.0 U
	1,4-Dichlorobenzene	12.0 U	1.20 U	3.00 U	1.20 U	1.20 U	1.20 U	1.20 U	1.20 U	1.20 U	1.20 U	1.20 U	12.0 U
	1,4-Dioxane	7.20 U	0.720 U	1.80 U	0.720 U	0.720 U	0.720 U	0.720 U	0.720 U	0.720 U	0.720 U	0.720 U	7.20 U
	2-Butanone	**17.3**	**4.06**	**36.3**	**5.42**	**2.93**	**3.88**	**5.08**	**5.68**	**2.57**	**3.42**	**19.1**	5.89 U
	2-Hexanone	8.19 U	0.819 U	2.05 U	0.819 U	0.819 U	0.819 U	0.819 U	0.819 U	0.819 U	0.819 U	0.819 U	8.19 U
	Acetone	**1,100**	**94.8**	**665**	**137**	**31.0**	**52.9**	**46.7**	**167**	**24.1**	**33.5**	**325**	**4,730**
	Benzene	**84.7**	**1.36**	**33.6**	**3.93**	**1.54**	**0.964**	**1.42**	**1.60**	**1.74**	**1.95**	**4.38**	6.38 U
	Bromodichloromethane	13.4 U	1.34 U	3.35 U	1.34 U	1.34 U	1.34 U	1.34 U	1.34 U	1.34 U	1.34 U	1.34 U	13.4 U
	Bromoform	20.6 U	2.06 U	5.16 U	2.06 U	2.06 U	2.06 U	2.06 U	2.06 U	2.06 U	2.06 U	2.06 U	20.6 U
	Bromomethane	7.76 U	0.776 U	1.94 U	0.776 U	0.776 U	0.776 U	0.776 U	0.776 U	0.776 U	0.776 U	0.776 U	7.76 U
	Carbon disulfide	6.22 U	0.622 U	**3.04**	0.622 U	0.622 U	0.622 U	0.622 U	0.622 U	0.622 U	0.622 U	0.622 U	6.22 U
	Carbon tetrachloride	12.6 U	1.26 U	3.14 U	1.26 U	1.26 U	1.26 U	1.26 U	1.26 U	1.26 U	1.26 U	1.26 U	12.6 U
	Chlorobenzene	9.20 U	0.920 U	2.30 U	0.920 U	0.920 U	0.920 U	0.920 U	0.920 U	0.920 U	0.920 U	0.920 U	9.20 U
	Chloroethane	5.27 U	0.527 U	**1.83**	0.527 U	0.527 U	0.527 U	0.527 U	0.527 U	0.527 U	0.527 U	**0.678**	5.27 U
	Chloroform	9.76 U	0.976 U	2.44 U	0.976 U	0.976 U	**2.28**	0.976 U	0.976 U	0.976 U	0.976 U	0.976 U	9.76 U
	Chloromethane	4.13 U	0.413 U	**3.06**	**0.442**	0.413 U	0.413 U	0.413 U	**0.454**	0.413 U	0.413 U	**0.792**	4.13 U
	cis-1,2-Dichloroethene	7.92 U	0.792 U	1.98 U	0.792 U	0.792 U	0.792 U	0.792 U	0.792 U	0.792 U	0.792 U	0.792 U	7.92 U
	cis-1,3-Dichloropropene	9.07 U	0.907 U	2.27 U	0.907 U	0.907 U	0.907 U	0.907 U	0.907 U	0.907 U	0.907 U	0.907 U	9.07 U
	Dibromochloromethane	17.0 U	1.7 U	4.26 U	1.7 U	1.7 U	1.7 U	1.7 U	1.70 U	1.70 U	1.70 U	1.70 U	17.0 U
	Dichlorodifluoromethane	9.88 U	**2.15**	2.47 U	**2.44**	**2.21**	**2.26**	**2.32**	**2.45**	**2.26**	**2.65**	**2.35**	9.88 U
	Ethylbenzene	8.68 U	0.868 U	**4.09**	0.868 U	0.868 U	0.868 U	0.868 U	0.868 U	**1.38**	**1.67**	**6.21**	8.68 U
	Hexachlorobutadiene	21.3 U	2.13 U	5.33 U	2.13 U	2.13 U	2.13 U	2.13 U	2.13 U	2.13 U	2.13 U	2.13 U	21.3 U
	Methylene chloride	17.4 U	1.74 U	4.34 U	1.74 U	1.74 U	1.74 U	1.74 U	1.74 U	1.74 U	1.74 U	1.74 U	17.4 U
	4-Methyl-2-pentanone	8.19 U	**1.31**	**9.43**	**5.19**	0.819 U	**1.44**	**2.04**	**2.83**	0.819 U	0.819 U	**24.2**	8.19 U
	Methyl tert butyl ether	7.20 U	0.720 U	1.80 U	0.720 U	0.720 U	0.720 U	0.720 U	0.720 U	0.720 U	0.720 U	0.720 U	7.20 U
	p/m-Xylene	17.4 U	**1.91**	**7.83**	**2.03**	1.74 U	1.74 U	1.74 U	1.74 U	**5.22**	**5.55**	**39.8**	**23.7**
	o-Xylene	8.68 U	0.868 U	2.17 U	0.868 U	0.868 U	0.868 U	0.868 U	0.868 U	**2.54**	**2.35**	**12.8**	**13.5**
	Styrene	8.51 U	0.851 U	**3.33**	0.851 U	0.851 U	0.851 U	0.851 U	0.851 U	0.851 U	0.851 U	0.851 U	8.51 U
	Tetrachloroethene	13.6 U	**1.79**	3.39 U	1.36 U	**1.48**	**10.3**	**2.90**	**2.18**	**5.17**	**4.69**	**2.20**	**39.2**
	Tetrahydrofuran	5.89 U	0.589 U	1.47 U	0.589 U	0.589 U	0.589 U	0.589 U	0.589 U	0.589 U	0.589 U	**30.7**	5.89 U
	Toluene	**21.6**	**2.57**	**21.3**	**2.97**	**1.19**	**0.764**	**0.761**	**3.67**	**3.12**	**3.92**	**17.6**	7.53 U
	trans-1,2-Dichloroethene	7.92 U	0.792 U	1.98 U	0.792 U	0.792 U	0.792 U	0.792 U	0.792 U	0.792 U	0.792 U	0.792 U	7.92 U
	trans-1,3-Dichloropropene	9.07 U	0.907 U	2.27 U	0.907 U	0.907 U	0.907 U	0.907 U	0.907 U	0.907 U	0.907 U	0.907 U	9.07 U
	Trichloroethene	**22.6**	1.07 U	**15.0**	1.07 U	1.07 U	1.07 U	1.07 U	1.07 U	1.07 U	1.07 U	1.07 U	10.7 U

Summary of Analytical Results for Soil Gas Samples -- February 2010
New Bedford High School
New Bedford, Massachusetts

Analysis	Sample ID: / Sample Date: / Analyte	TVP-1 2/15/2010	TVP-2 2/15/2010	TVP-3 2/15/2010	TVP-4 2/15/2010	TVP-5 2/15/2010	TVP-6 2/15/2010	TVP-7 2/15/2010	TVP-8 2/15/2010	TVP-9 2/15/2010	TVP-9 2/15/2010 Field Dup	TVP-10 2/15/2010	TVP-11 2/15/2010
	Trichlorofluoromethane	11.2 U	**1.17**	2.81 U	**1.21**	1.12 U	1.12 U	1.12 U	**1.26**	1.12 U	**1.18**	**1.21**	11.2 U
	Vinyl chloride	5.11 U	0.511 U	1.28 U	0.511 U	0.511 U	0.511 U	0.511 U	0.511 U	0.511 U	0.511 U	0.511 U	5.11 U
	Naphthalene	10.5 U	1.05 U	**3.31**	1.05 U	1.05 U	1.05 U	1.05 U	1.05 U	**3.84**	1.05 U	**3.22**	10.5 U
	1,1,1,2-Tetrachloroethane	13.7 U	1.37 U	3.43 U	1.37 U	1.37 U	1.37 U	1.37 U	1.37 U	1.37 U	1.37 U	1.37 U	13.7 U
	Isopropylbenzene	**198**	0.982 U	**36.0**	**7.45**	0.982 U	0.982 U	0.982 U	**39.3**	0.982 U	0.982 U	0.982 U	9.82 U
	1,2,3-Trichloropropane	12.0 U	1.20 U	3.01 U	1.20 U	1.20 U	1.20 U	1.20 U	1.20 U	1.20 U	1.20 U	1.20 U	12.0 U
	Bromobenzene	12.8 U	1.28 U	3.21 U	1.28 U	1.28 U	1.28 U	1.28 U	1.28 U	1.28 U	1.28 U	1.28 U	12.8 U
	Dibromomethane	14.2 U	1.42 U	3.55 U	1.42 U	1.42 U	1.42 U	1.42 U	1.42 U	1.42 U	1.42 U	1.42 U	14.2 U
	tert-Amyl Methyl Ether	8.35 U	0.835 U	2.09 U	0.835 U	0.835 U	0.835 U	0.835 U	0.835 U	0.835 U	0.835 U	0.835 U	8.35 U
	2-Chlorotoluene	10.3 U	1.03 U	2.59 U	1.03 U	1.03 U	1.03 U	1.03 U	1.03 U	1.03 U	1.03 U	1.03 U	10.3 U
	4-Chlorotoluene	10.3 U	1.03 U	2.59 U	1.03 U	1.03 U	1.03 U	1.03 U	1.03 U	1.03 U	1.03 U	1.03 U	10.3 U
	2,2-Dichloropropane	9.23 U	0.923 U	2.31 U	0.923 U	0.923 U	0.923 U	0.923 U	0.923 U	0.923 U	0.923 U	0.923 U	9.23 U
	1,1-Dichloropropene	9.07 U	0.907 U	2.27 U	0.907 U	0.907 U	0.907 U	0.907 U	0.907 U	0.907 U	0.907 U	0.907 U	9.07 U
	Diisopropyl ether	8.35 U	0.835 U	2.09 U	0.835 U	0.835 U	0.835 U	0.835 U	0.835 U	0.835 U	0.835 U	0.835 U	8.35 U
	tert-Butyl Ethyl Ether	8.35 U	0.835 U	2.09 U	0.835 U	0.835 U	0.835 U	0.835 U	0.835 U	0.835 U	0.835 U	0.835 U	8.35 U
	1,2,3-Trichlorobenzene	14.8 U	1.48 U	3.71 U	1.48 U	1.48 U	1.48 U	1.48 U	1.48 U	1.48 U	1.48 U	1.48 U	14.8 U
	Ethyl ether	6.06 U	0.606 U	1.51 U	0.606 U	0.606 U	0.606 U	0.606 U	0.606 U	0.606 U	0.606 U	0.606 U	6.06 U
	n-Butylbenzene	11.0 U	1.10 U	2.74 U	1.10 U	1.10 U	1.10 U	1.10 U	1.10 U	1.10 U	1.10 U	**1.71**	11.0 U
	sec-Butylbenzene	11.0 U	1.10 U	2.74 U	1.10 U	1.10 U	1.10 U	1.10 U	1.10 U	1.10 U	1.10 U	1.10 U	11.0 U
	tert-Butylbenzene	11.0 U	1.10 U	2.74 U	1.10 U	1.10 U	1.10 U	1.10 U	**3.66**	1.10 U	1.10 U	**1.91**	11.0 U
	1,2-Dibromo-3-chloropropane	19.3 U	1.93 U	4.83 U	1.93 U	1.93 U	1.93 U	1.93 U	1.93 U	1.93 U	1.93 U	1.93 U	19.3 U
	p-Isopropyltoluene	11.0 U	1.10 U	2.74 U	1.10 U	1.10 U	1.10 U	1.10 U	1.10 U	1.10 U	1.10 U	1.10 U	11.0 U
	n-Propylbenzene	9.82 U	0.982 U	2.46 U	0.982 U	0.982 U	0.982 U	0.982 U	0.982 U	0.982 U	0.982 U	**1.85**	9.82 U
	1,3-Dichloropropane	9.23 U	0.923 U	2.31 U	0.923 U	0.923 U	0.923 U	0.923 U	0.923 U	0.923 U	0.923 U	0.923 U	9.23 U

Notes:

ug/m^3 - micrograms per cubic meters.

U - Compound was not detected at specified quantitation limit.

Values in **Bold** indicate the compound was detected.

TO - Toxic organics.

APPENDIX J

MANIFESTS

4210

57506

Please print or type.
(Form designed for use on elite (12-pitch) typewriter)

NON-HAZARDOUS WASTE MANIFEST

1. Generator's US EPA ID No.: MP508997451 1
Manifest Doc. No.: 29419
2. Page 1 of 1
NHWM 029419

GENERATOR

3. Generator's Name and Mailing Address
City Of New Bedford
133 Williams Street
New Bedford, MA 02740

City Of New Bedford -230 Hathaway
230 Hathaway Boulevard
New Bedford, MA 02740

4. Generator's Phone ( ) 508-997-4511

5. Transporter 1 Company Name: Triumvirate Environmental, Inc.
6. US EPA ID Number: MAD98628 8988
A. Transporter's Phone: 617-628-8099

7. Transporter 2 Company Name: 12 00
8. US EPA ID Number:
B. Transporter's Phone:

9. Designated Facility Name and Site Address
Triumvirate Environmental (Montmack), Inc.
203 Howard Street
Lowell, MA 01852
10. US EPA ID Number: MAD047075734
C. Facility's Phone: (978) 453-7772

11. Waste Shipping Name and Description	12. Containers No.	Type	13. Total Quantity	14. Unit Wt/Vol
a. Non-DOT, Non-RCRA Regulated Material (Monitoring Well Wastewater)	003	DM	00.1200	P
b.				
c.				
d.				

D. Additional Descriptions for Materials Listed Above

E. Handling Codes for Wastes Listed Above
1(a) H141

15. Special Handling Instructions and Additional Information
Emergency Contact: Triumvirate Environmental. 800 966 9282

a - (3 x 55) Wastewater b - c - d -

J 1629.01

16. GENERATOR'S CERTIFICATION: I hereby declare that the contents of this consignment are fully and accurately described above by proper shipping name and are classified, packed, marked, and labeled, and are in all respects in proper condition for transport by highway according to applicable international and national governmental regulations.

Printed/Typed Name: Xscott Alfonse
Signature: [signature]
Month 3 Day 25 Year 10

TRANSPORTER

17. Transporter 1 Acknowledgement of Receipt of Materials
Printed/Typed Name: Dan Higgins
Signature: Dan Higgins
Month 3 Day 25 Year 10

18. Transporter 2 Acknowledgement of Receipt of Materials
Printed/Typed Name:
Signature:
Month Day Year

FACILITY

19. Discrepancy Indication Space

20. Facility Owner or Operator: Certification of receipt of waste materials covered by this manifest except as noted in Item 19.

Printed/Typed Name: Steve J Powers
Signature: [signature]
Month 03 Day 31 Year 10

Published by J. J. KELLER & ASSOCIATES, INC.
Neenah, WI • USA • (800) 327-6868
Printed in the United States

TRANSPORTER #1

57862

NON-HAZARDOUS WASTE MANIFEST

1. Generator's US EPA ID No. M·P·5·0·8·9·9·7·4·5·1·1

Manifest Doc. No. 2·9·4·2·7

2. Page 1 of 1

NHWM 029427

3. Generator's Name and Mailing Address
City Of New Bedford
133 Williams Street
New Bedford, MA 02740

4. Generator's Phone ( ) 508-997-4511

City Of New Bedford -230 Hathaway
230 Hathaway Boulevard
New Bedford, MA 02740

5. Transporter 1 Company Name
Triumvirate Environmental, Inc.

6. US EPA ID Number M·A·D·9·8·5·2·8·6·9·8·8

A. Transporter's Phone 617-628-8099

7. Transporter 2 Company Name

8. US EPA ID Number

B. Transporter's Phone

9. Designated Facility Name and Site Address
Triumvirate Environmental (Merrimack), Inc.
263 Howard Street
Lowell, MA 01852

10. US EPA ID Number M·A·D·0·4·7·0·7·5·7·3·4

C. Facility's Phone (978) 453-7772

11. Waste Shipping Name and Description

	12. Containers No.	Type	13. Total Quantity	14. Unit Wt/Vol
a. Non-DOT, Non-RCRA Regulated Material (Monitoring Well Wastewater)	003	DM	[illegible]	P
b.				
c.				
d.				

D. Additional Descriptions for Materials Listed Above

E. Handling Codes for Wastes Listed Above

15. Special Handling Instructions and Additional Information

Emergency Contact: Triumvirate Environmental. 800 966 9282

a - (1/3 x 55) 21629-01 Wastewater b- c- d-

16. **GENERATOR'S CERTIFICATION:** I hereby declare that the contents of this consignment are fully and accurately described above by proper shipping name and are classified, packed, marked, and labeled, and are in all respects in proper condition for transport by highway according to applicable international and national governmental regulations.

Printed/Typed Name | Signature | Month | Day | Year

17. Transporter 1 Acknowledgement of Receipt of Materials

Printed/Typed Name [illegible] | Signature [illegible] | Month | Day | Year

18. Transporter 2 Acknowledgement of Receipt of Materials

Printed/Typed Name | Signature | Month | Day | Year

19. Discrepancy Indication Space

20. Facility Owner or Operator: Certification of receipt of waste materials covered by this manifest except as noted in Item 19.

Printed/Typed Name [illegible] | Signature [illegible] | Month | Day | Year

GENERATOR

TRANSPORTER

FACILITY

T/S/D/F/ COPY