IMMEDIATE RESPONSE ACTION STATUS REPORT

New Bedford High School Substantial Release Migration / Critical Exposure Pathway
230 Hathaway Boulevard
New Bedford, Massachusetts
Release Tracking Number 4-22409

Prepared for:

City of New Bedford
133 William Street
New Bedford, Massachusetts 02740

Prepared by:

TRC Environmental Corporation
Wannalancit Mills
650 Suffolk Street
Lowell, Massachusetts 01854
(978) 970-5600

November 2010

TABLE OF CONTENTS

I BACKGROUND 1

II IMMEDIATE RESPONSE ACTION STATUS REPORT (310 CMR 40.0425)..... 14

III REFERENCES 24

TABLES

Table 1: Summary of Analytical Results for Aqueous Seep Samples – December 2009 and January 2010
Table 2: Summary of Analytical Results for Groundwater Samples – 2010
Table 3: Summary of Analytical Results for Indoor Air Samples – 2010
Table 4: Summary of Analytical Results for Soil Gas Samples – 2010
Table 5: Summary of Analytical Results for Soil Samples - 2010
Table 6: Summary of Analytical Results for Fingerprint Sample
Table 7: Groundwater Elevations – New Bedford High School

FIGURES

Figure 1: Site Aerial Photograph
Figure 2: Site Plan with Sampling Locations
Figure 3: Permanent Soil Gas Sampling Points Installation Details
Figure 4: Estimated Groundwater Contour Map – September 7, 2010

APPENDICES

Appendix A: Laboratory Data Reports
Appendix B: Updated Imminent Hazard Screening Evaluation
Appendix C: Groundwater Monitoring Well Installation Logs
Appendix D: Groundwater Monitoring Sampling Logs

Immediate Response Action Status Report

New Bedford High School – Substantial Release Migration / Critical Exposure Pathway

230 Hathaway Boulevard, New Bedford, Massachusetts

Release Tracking Number (RTN) 4-22409

TRC Project Number: 115058

November 29, 2010

TRC Environmental Corporation (TRC) is submitting this Immediate Response Action Status Report (IRA Status Report) to the Massachusetts Department of Environmental Protection (MassDEP) on behalf of the City of New Bedford (City) through the City's Department of Environmental Stewardship and per the Massachusetts Contingency Plan (MCP; 310 CMR 40.0000). This IRA Status Report addresses a Condition of Substantial Release Migration (SRM) at the New Bedford High School (NBHS) campus located at 230 Hathaway Boulevard in New Bedford, Massachusetts (the "Site") as defined under 310 CMR 40.0006 of the MCP. The condition was reported to the MassDEP by TRC via telephone in conjunction with the City on January 29, 2010 at approximately 11:05 AM. MassDEP orally approved IRA assessment and mitigation activities at the Site, and assigned Release Tracking Number (RTN) 4-22409. TRC submitted an IRA Plan on behalf of the City on March 22, 2010 (TRC, 2010a). The NBHS campus is part of the larger Parker Street Waste Site (PSWS) that is tracked by MassDEP under RTN 4-15685. The location of the Site is shown in Figure 1.

This IRA Status Report is organized as follows: Section I (Background) briefly summarizes information on TRC's involvement with the Site, the circumstances of the release, and the response actions conducted at the Site under MassDEP oral approval. Section II (IRA Status Report) provides the contents of an IRA Status Report as set forth under the MCP, specifically 310 CMR 40.0425. Section III (References) lists information sources relied upon in the preparation of this IRA Status Report.

I BACKGROUND

The SRM condition was discovered during investigation of water pooled on the floor of the Mechanical Room (B-114) of the NBHS building. TRC collected several samples of the pooled water, which appeared to be seeping through cracks or seams in the floor. Analytical results for these samples suggest the potential for chlorinated volatile organic compounds (VOCs) to be present in indoor air in the building, triggering the reporting condition and the initiation of IRA assessment activities.

(a) Release Discovery

On December 2, 2009, TRC collected aqueous samples from four locations (BRM-S-1 through BRM-S-3 and FIP-S-1) where water had pooled on the floor of the Mechanical Room of the NBHS building (see Figure 2). The pooled water appeared to have seeped into the Mechanical Room through cracks and seams in the concrete floor. Based on elevation data collected by TRC, the elevation of the groundwater table is generally higher than the elevation of the lower floor surfaces of the Mechanical Room, and the seepage appears to be associated with groundwater. The aqueous samples were analyzed for VOCs, extractable petroleum hydrocarbons (EPH), polyaromatic hydrocarbons (PAHs), polychlorinated biphenyls (PCBs), and total and dissolved metals. The results of the analyses indicated the presence of chlorinated VOCs in seep sample BRM-S-3 (vinyl chloride [VC], cis-1,2-dichloroethylene [cis-1,2-DCE], and trans-1,2-dichloroethylene [trans-1,2-DCE]), C19-C36 aliphatic hydrocarbons in seep sample BRM-S-1, and metals (arsenic, barium, lead and/or zinc) in all four of the seep samples. The concentration of VC in seep sample BRM-S-3 (2.1 micrograms per liter; ug/L) was greater than the MCP Method 1 GW-2 groundwater cleanup standard of 2 ug/L. All other concentrations were below MCP Method 1 GW-2 groundwater cleanup standards (see Table 1).

To verify the detection of VC, TRC re-sampled the pooled water for VOCs on January 7, 2010. Chlorinated VOCs were not detected in two out of four samples (BRM-S-1 and BRM-S-2). Chlorinated VOCs were detected in sample BRM-S-3 (chlorobenzene, 1,3-dichlorobenzene [1,3-DCB], 1,4-dichlorobenzene [1,4-DCB], cis-1,2-DCE, trans-1,2-DCE, trichloroethylene [TCE] and VC) and FIP-S-1 (cis-1,2-DCE and trans-1,2-DCE). The concentrations of cis-1,2-DCE and VC in sample BRM-S-3 were greater than their corresponding MCP Method 1 GW-2 groundwater cleanup standards. All other concentrations were below MCP Method 1 GW-2 groundwater cleanup standards (see Table 1).

On January 6 and 7, 2010, TRC collected groundwater samples from monitoring wells MW-4, MW-5, MW-6, and MW-7 constructed on the NBHS campus in 2008 (see Figure 2). Monitoring wells MW-4, MW-5, and MW-6 are located inside the NBHS building in the Auto Shop (D-116), Boiler Room (C-101), and Milk Bar (B-133), respectively. MW-7 is located near the flagpole near the front entrance to the NBHS building. The samples collected from these four monitoring wells were submitted to Con-Test Analytical Laboratory (Con-Test) in East Longmeadow, Massachusetts for analysis of VOCs. Groundwater samples were collected by TRC consistent with United States Environmental Protection Agency (EPA) Region 1 low-flow sampling procedures.

Chlorinated VOCs were not detected in two out of the four aforementioned monitoring wells (MW-4 and MW-6). Chlorinated VOCs were detected in groundwater samples from two of the monitoring wells (MW-5 and MW-7). Specifically, cis-1,2-DCE was detected at a concentration of 3.7 ug/L (4.1 ug/L in its duplicate) in monitoring well MW-5, located inside the Boiler Room and adjacent to the Mechanical Room, which is below MCP Method 1 GW-2 groundwater cleanup standards. Also, tetrachloroethylene (PCE; 63 ug/L) and VC (3.4 ug/L) were detected in monitoring well MW-7, located in front of NBHS, near the flagpole. The concentrations of PCE

and VC in the sample from MW-7 were above their respective MCP Method 1 GW-2 groundwater cleanup standards (see Table 2).

In parallel with the aforementioned investigation activities, TRC evaluated building structural features that might influence fate and transport in the groundwater beneath the NBHS building. The structural evaluation revealed an extensive underdrain system beneath the building, directing groundwater to the storm sewer during high groundwater events. A review of the NBHS engineering plans also indicated that the storm and sanitary sewers run in proximity to monitoring well MW-7 (see Figure 2).

(b) Release Reporting

On January 28, 2010 at approximately 3:30 PM, TRC advised the City's Department of Environmental Stewardship that the seep and impacted water and the underdrain system represented two potential SRM conditions as defined in 310 CMR 40.0006:

- Releases to the groundwater that have migrated or are expected to migrate more than 200 feet per year; or
- Releases to the groundwater or to the vadose zone that have resulted or are within one year likely to result in the discharge of vapors into school buildings or occupied residential dwellings.

Either of these conditions constitute a 72-hour regulatory reporting obligation to the MassDEP in accordance with 310 CMR 40.0313(5).

The SRM conditions described above were reported to the MassDEP by TRC via telephone in conjunction with the City's Department of Environmental Stewardship on January 29, 2010 at approximately 11:05 AM. MassDEP orally approved the IRAs at the Site, and assigned RTN 4-22409.

The orally-approved IRA consisted of the following:

- Monitoring of indoor air locations, including the Mechanical Room, for VOCs with expedited analysis. Recognizing that indoor air in the Mechanical Room may reflect materials stored in this area, MassDEP suggested that an inventory of chemicals stored at the NBHS building, relocation of indoor chemical sources, and ventilation of the Mechanical Room would be appropriate prior to re-sampling in this area;
- Re-sampling of seeps in the Mechanical Room; and
- Sealing of the floor seep.

(c) Analysis for a Potential Imminent Hazard

TRC evaluated whether the VOC concentrations in the seep were associated with a potential Imminent Hazard (IH) Condition based on fate and transport modeling of seep-water VOC concentrations to indoor air concentrations and subsequent risk and hazard estimation. TRC

modeled the potential air concentrations in the Mechanical Room where the seeps were located. TRC calculated concentrations of chlorinated VOCs in the air using the equation in the EPA's *Risk Management Program Guidance for Offsite Consequence Analysis* (EPA, 2009) to calculate evaporation rates of water and VOCs as functions of air velocity over the pooled seep water to estimate the mass balance for all detected compounds. The initial risk evaluation based on the modeled indoor air concentrations concluded that an IH condition was not present (see Appendix A of the IRA Plan).

TRC also collected indoor air data in the field using a photoionization detector (PID) and TCE- and VC-specific Draeger tubes, neither of which indicated the presence of measurable VOC impacts in the breathing zone in the Mechanical Room where the seep water was present. The Draeger Tube field screening activity included TCE tubes, with a measuring range from 2 to 50 parts per million by volume (ppmv) and VC tubes, with a measuring range from 0.5 to 5 ppmv. Twenty-one locations were sampled, including one location several inches above seep BRM-S-3. The lower end of these ranges is adequate to determine that an IH condition is not present.

The absence of an IH condition was later borne out by the analysis of indoor air, as discussed herein.

(d) IRA Activities Performed Prior to this Status Period

Following the reporting of the release condition to MassDEP on Friday, January 29, 2010, TRC undertook investigations of indoor air, subslab soil vapors, groundwater, aqueous seeps, storm sewer infrastructure, and sanitary sewer infrastructure to evaluate the SRM and the nature and extent of impacts at NBHS. Sample locations are shown on Figure 2.

The results of IRA investigation activities conducted prior to this IRA Status Report are detailed in the following TRC documents:

- *Immediate Response Action Plan – New Bedford High School Substantial Release Migration / Critical Exposure Pathway, 230 Hathaway Boulevard, New Bedford, Massachusetts.* March 2010.
- *Immediate Response Action Status Report - New Bedford High School Substantial Release Migration / Critical Exposure Pathway, 230 Hathaway Boulevard, New Bedford, Massachusetts.* May 2010.

A summary of those findings is presented herein. For completeness, this section also includes other activities collateral to the IRA activities (e.g., Fact Sheet preparation) implemented prior to this reporting period.

Indoor Air Sampling

On Saturday and Sunday, January 30 and 31, 2010, TRC collected five (5) indoor air samples for VOCs. Samples TRC-IA-1 through TRC-IA-5 were collected over a 24-hour period using evacuated stainless steel canisters. Since the sampling took place over the weekend, the NBHS

Heating, Ventilating and Air Condition (HVAC) system was not in operation. The sample locations are illustrated on Figure 2.

The samples were submitted to Alpha Analytical (Alpha) of Westborough, Massachusetts for analysis by EPA Method TO-15. VOCs were detected in indoor air based on the samples collected by TRC and are summarized in Table 3. The analytical results are compared to threshold screening levels (MassDEP, 2009). Concentrations of VOCs in three of the five samples were below the threshold screening levels. Sample TRC-IA-1 (Mechanical Room, B-114) had concentrations of benzene, TCE, and VC above the threshold screening levels. Sample TRC-IA-5 (A-Block, Classroom A-3-112) had concentrations of benzene and VC exceeding the threshold screening levels.

At the direction of MassDEP, the indoor air sample in the Mechanical Room was collected at the soonest possible time after the SRM condition was reported to MassDEP on January 29, 2010. The MassDEP was informed by TRC that immediate sampling of the Mechanical Room did not allow for relocation of products stored in the Mechanical Room that may have contributed to VOC concentrations measured in sample TRC-IA-1 prior to collecting the indoor air sample. Sampling was conducted pursuant to the MassDEP requirement despite the MassDEP-acknowledged potential for biased analytical results to evaluate the current indoor conditions, regardless of source.

On February 3, 2010, TRC personnel conducted an initial inventory of chemical products stored at the NBHS building focused on the Mechanical Room and associated nearby locations (e.g., boiler room, engineers' offices, etc). TRC also compiled available Material Safety Data Sheet (MSDS) information. Where the chemical makeup of commercial products was not clearly marked, TRC referred to an appropriate MSDS for the product. Benzene and chlorinated solvent content was noted in a number of products.

The detection of chlorinated solvents in seep water and groundwater in the vicinity of the Mechanical Room defines a Critical Exposure Pathway (CEP)[1] at the NBHS building. TRC evaluated the initial indoor air results by performing a preliminary site-specific risk and hazard calculation for each room where an indoor air sample had been collected assuming a chronic worker scenario (8 hours of exposure per day, 250 days per year for 27 years) (see Appendix A of the IRA Plan). The calculations indicated that risks and hazards were less than the MCP Risk Limits of an Excess Lifetime Cancer Risk (ELCR) of 1×10^{-5} and a Hazard Index (HI) of 1 for each room evaluated. The protocol is consistent with that conducted for the neighboring Keith Middle School (KMS) long-term monitoring for VOCs and PCBs. The preliminary evaluation indicated that, based on the sampling conducted in January 2010, there was no IH condition or chronic risk/hazard above MCP risk limits associated with indoor air exposures. Despite the initial finding of No Significant Risk, further investigations were conducted.

As described in TRC's IRA Status Report submitted on May 24, 2010 (TRC, 2010b), TRC collected twelve (12) supplemental indoor air samples (TRC-IA-1 and TRC-IA-5 through TRC-

[1] Section 40.0006 of the MCP defines a Critical Exposure Pathway (CEP) as a route by which subsurface contamination results in measurable concentrations of indoor air contamination in a school or residence.

IA-15) on April 20, 2010 for analysis of VOCs via EPA Method TO-15 (see Figure 2). Samples were collected over a 24-hour period using evacuated stainless steel canisters. Since the sampling took place over the April school vacation week, the NBHS HVAC system was not in operation.

The results of the April 20, 2010 indoor air sample analyses, detailed in TRC's previous IRA Status Report and summarized in Table 3, are compared to threshold screening levels[2] (MassDEP, 2009). Ten of the twelve indoor air samples collected on April 20, 2010 had no VOCs detected in excess of screening thresholds. This included the re-sampling of TRC-IA-5 (Classroom A-3-112), which had previously exhibited concentrations of benzene and VC exceeding the threshold screening values on January 31, 2010. Furthermore, subsurface VOC impacts have not been found in the vicinity of this room and no link has been found between the concentrations measured in the indoor air of the classroom in January 2010 and the subsurface environment in this location.

Sample TRC-IA-1 (Mechanical Room) exhibited the presence of benzene, cis-1,2-DCE, TCE, and VC above the screening thresholds. Sample TRC-IA-15 (Lecture Room) exhibited benzene, PCE, and total xylenes in excess of screening thresholds. Based on these data, the potential for some of the VOCs in indoor air to originate from subsurface impacts exists. However, given the proximity of sample location TRC-IA-15 to the Auto Shop (D-116), the potential also exists for VOCs in indoor air to originate from other sources, such as aerosol brake cleaning products and degreasing products[3].

TRC provided an updated site-specific risk evaluation in Appendix E of the IRA Status Report submitted on May 24, 2010. TRC evaluated the indoor air results by performing site-specific risk and hazard calculations for each room where an indoor air sample had been collected. The risk hazard calculations assume a chronic worker exposure scenario (8 hours of exposure per day, 250 days per year for 27 years). The calculations indicated that risks and hazards are less than the MCP Risk Limits of an Excess Lifetime Cancer Risk (ELCR) of 1E-05 and a Hazard Index (HI) of 1 for each room evaluated. The site-specific risk and hazard calculation protocol is consistent with that conducted for the neighboring KMS for VOCs and PCBs.

The evaluation indicated that, based on the sampling conducted in January and April 2010, there is no IH condition or chronic risk/hazard above MCP risk limits associated with current indoor air exposures. All compounds detected in indoor air were included in the risk and hazard calculations even though some of the detections may be associated with VOCs sources unrelated to vapor intrusion. To assist in distinguishing the relative contribution of vapor intrusion to the measured indoor air concentrations, fate and transport modeling of soil gas to indoor air

---

[2] The MassDEP has established indoor air screening levels to indicate when additional characterization is appropriate at a site. The screening levels are set at Hazard Quotient (HQ) of 0.2 and excess lifetime cancer risk (ELCR) of 1E-06. A site-specific evaluation is recommended in situations where these screening levels are exceeded.

[3] On May 6, 2010, TRC conducted an evaluation of products used and/or stored in the Auto Shop that may contribute to the VOC concentrations measured in the indoor air sample collected from the nearby Lecture Room (TRC-IA-15). TRC also interviewed Auto Shop staff regarding common work practices associated with products identified as potentially contributing VOCs to the indoor air.

concentrations conducted for the Lecture Room (TRC-IA-15) and Classroom A-3-112 indicates that only a small fraction, if any, of the measured indoor air concentrations might be associated with a complete vapor intrusion pathway.

On May 6, 2010, TRC evaluated the types of products used and/or stored in the Auto Shop that might contribute to the VOC concentrations measured in the indoor air sample collected from the nearby Lecture Room (see Appendix D of the IRA Status Report submitted on May 24, 2010). The potential exists for VOCs in indoor air to originate from other sources, such as aerosol brake cleaning products and degreasing products. Further investigation was conducted to evaluate this scenario during this reporting period as described in Section II below.

Field Survey of Potential Vapor Migration Pathways

TRC identified a range of possible vapor migration pathways and potential CEP mitigation measures. The following potential pathways were identified:

- Groundwater seepage through floor cracks;
- Vapor migration through and around drains;
- Vapor intrusion through floor cracks; and
- Migration of VOCs via the HVAC system at the NBHS building.

On February 11, 2010, TRC personnel screened annular spaces in and around drains and floor cracks throughout the first floor of the NBHS building using a parts per billion (ppb) RAE low-level PID. TRC also measured floor drain dimensions and determined that the floor drain lines are 3-inches in diameter. The survey identified two floor cracks, 45 drains, two sumps (the elevator shaft and dish room hatch) and one instance of pipes emerging from the floor (Fry-o-Lator). TRC noted several instances where VOC readings at the drain or crack exceeded background concentrations.

TRC conducted supplemental seep sampling, implemented mitigation measures of floor drain and floor crack potential migration pathways, and evaluated the HVAC system as detailed in the previous IRA Status Report submitted to MassDEP on May 24, 2010 and as summarized below.

Resampling of Mechanical Room Seep Water

On January 30, 2010, following the collection of indoor air samples at NBHS, TRC re-sampled the four seep locations and analyzed the samples for VOCs. None of the measured concentrations exceeded MCP Method 1 GW-2 groundwater cleanup standards. These results are summarized in Table 1.

Floor Drain Intrusion Mitigation

Floor drains in the building are constructed with traps that typically hold standing water sufficient to prevent air migration through the drain system into the building. The traps in floor

drains used infrequently could potentially dry out over time, allowing vapors to migrate from the sewer system into NBHS.

During a supplemental survey of floor drains in the vicinity of the Mechanical Room on April 21, 2010, traps in three of the 3-inch floor drains were found to be dry. These drains were located in three "milk bar" rooms adjacent to individual house cafeteria serving areas within the NBHS building, rooms B-104, B-126 and B-133, respectively. To eliminate the potential pathway for vapor migration into the building, drain plugs were deployed in each of these drains.

Floor Crack Sealing

Several previously unidentified floor cracks were observed by TRC during a supplemental survey performed on April 21, 2010. Although visual inspection is not sufficient to determine the depth of the cracks, the majority of the cracks appeared to be surficial in nature. Two cracks observed on April 21, 2010 were sealed with a silicone sealant to prevent migration of subslab vapors. These two cracks are located within the NBHS building in the Kitchen (B-134) and a corridor (B-124).

HVAC, Air Flow, and Pressure Evaluations

On February 11, 2010, a TRC Certified Industrial Hygienist (CIH) with expertise in HVAC systems and indoor air evaluations visited the NBHS building. Field data were collected with pressure differential instrumentation, a velometer for air flow measurements, and smoke testing for visual evaluation of air flow directions. Pressure differentials, in inches of water, were measured to determine the differences in pressure between the Mechanical Room and adjacent areas. Air flow measurements were also taken in open doorways, drains, and other possible pathways.

TRC noted that the Mechanical Room is under strong negative pressure relative to adjacent hallways and rooms when all air handling equipment is operating. With the air handling units (AHUs) off, the pressure is remains negative, but to a lesser degree. The primary sources of this negative pressure are operating fans and air handling equipment in the room. A secondary source of negative pressure is the chimney effect induced by the former incinerator stack. Smoke testing of the AHUs, the condensate drains, floor drains, doorways and cracks in the seep area showed that there was a strong negative pressure and that air was drawn into the intake side of the AHUs. This negative pressure should act to mitigate a potential migration to other areas of the building.

Sampling of Exterior Storm Drains

On February 3, 2010, TRC field personnel collected aqueous samples for VOC analysis from ten storm drain manholes at the NBHS campus. The selected manholes are in-line or downstream of potential inflows from the NBHS building underdrain system. Samples HS-D-1 through HS-D-9, as well as HS-ST-1, were collected from manhole locations on the NBHS campus as illustrated on Figure 2. The sample locations were selected to evaluate whether the underdrains beneath the

NBHS campus had directed potentially impacted groundwater into the storm sewer via the footing drains.

The results of the storm drain manhole aqueous sampling and laboratory analysis are detailed in TRC's previous IRA Status Report (TRC, 2010b). VOCs were not detected in nine of the ten manholes sampled on February 3, 2010. VOCs were detected in the sample collected from the one manhole that serves both the storm sewer system and the sanitary sewer system at the NBHS campus (HS-D-5). Chloroform, cis-1,2-DCE, and 1,1,1-trichloroethane were reported for the aqueous sample collected from this manhole at concentrations below MCP Method 1 GW-2 groundwater cleanup standards.

Sampling of the Sanitary Sewer

During the February school vacation on February 17, 2010, TRC collected aqueous samples from the NBHS sanitary sewer system. The five selected sanitary sewer manholes are in-line/downstream of potential inflows from the NBHS building. Samples LS-MH-1 and SS-MH-1 through SS-MH-4 were collected from the manhole locations as illustrated on Figure 2. Sample locations were selected to evaluate potential sources of the concentrations of chlorinated solvents observed in the February 3, 2010 sample collected from the combined sanitary/storm manhole (HS-D-5).

The results of the sanitary sewer manhole aqueous sample analysis, detailed in TRC's previous IRA Status Report, indicate that VOCs were detected in four of the five sanitary sewer manholes at concentrations below MCP Method 1 GW-2 groundwater cleanup standards. However, chlorinated solvents cis-1,2-DCE and trans-1,2-DCE were detected only in the two sanitary sewer manholes (SS-MH-3 and SS-MH-4). Sanitary sewer sample SS-MH-3 was collected immediately upstream from the combined sewer manhole (MH-4). Sanitary sewer sample SS-MH-4 was collected to verify previously obtained results from sample HS-D-5.

A comparison of groundwater elevation contours to sewer line elevation data indicates that the vitrified clay sanitary sewer line serving the NBHS building intersects the groundwater table in the vicinity of HS-MH-3. Both of the manholes where chlorinated solvent impacts have been detected are located downgradient from the point where the water table intersects the vitrified clay sewer line, and downgradient of monitoring well MW-7.

Camera Inspection of Sanitary Line

On March 9, 2010, in an effort to confirm infiltration of groundwater into the sanitary sewer line, the City conducted a video camera investigation of the majority of the sanitary sewer line between manholes MH-2 (location of sample SS-MH-1) and MH-5 (manhole located between samples SS-MH-3 and SS-MH-4). The recording of the camera investigation was reviewed by TRC on March 28, 2010 and a summary of the TRC interpretation is presented in Appendix H of the IRA Status Report submitted on May 24, 2010 (TRC, 2010b).

Due to the amount of flowing water within the sanitary line, it was not feasible to determine whether groundwater was infiltrating the pipe during the camera investigation. However, mineral deposits noted along the bottom and sides of the pipe section in several locations may indicate historic infiltration of groundwater. In addition, damage to the sanitary sewer line was observed in two locations. The damage to the pipe in these areas was judged to be significant enough to allow infiltration of groundwater to the sanitary line.

Well Installation & Groundwater Sampling

On February 15, 2010 (during the February school vacation), TRC installed nine additional monitoring wells (MW-11 through MW-19) around the perimeter of A-, B- and C-Blocks at the NBHS building. TRC collected groundwater samples for VOC analysis in accordance with EPA Region 1 low-flow sampling techniques. Concurrently, TRC also sampled all existing TRC monitoring wells on the NBHS campus. A total of 16 wells were sampled from February 17 through February 19, 2010. The well locations are illustrated on Figure 2.

The groundwater samples were submitted to Alpha for analysis of VOCs. VOCs were not detected in 14 of the 16 wells sampled in February 2010 and no VOCs were detected in any of the newly installed monitoring wells. Chlorinated compounds were detected in monitoring wells MW-5 and MW-7, at concentrations similar to the previous sample round in January 2010. The results of January and February 2010 groundwater analyses are summarized in Table 2.

On April 2, 2010, TRC installed five (5) monitoring wells in the vicinity of the flagpole island to evaluate the lateral extent of groundwater impacts observed in monitoring well MW-7. TRC collected samples from these monitoring wells for VOC analysis in accordance with EPA Region 1 low-flow sampling techniques. Concurrently, TRC also sampled several existing TRC wells on the NBHS campus in the vicinity of the Mechanical Room. A total of ten (10) monitoring wells (MW-4, MW-5, MW-7, MW-11, MW-18 and MW-20 through MW-24) were sampled during the period from April 7 through April 9, 2010. The wells locations are illustrated on Figure 2.

The groundwater samples were submitted to Alpha for analysis of VOCs. The results of these analyses are summarized in Table 2. No VOCs were detected in excess of MCP Method 1 GW-2 groundwater cleanup standards in eight out of the ten monitoring wells sampled in April 2010. A concentration of one chlorinated VOC (PCE) was detected in MW-7 above the MCP Method 1 GW-2 groundwater cleanup standard. In addition, VC was detected in excess of its applicable MCP Method 1 GW-2 groundwater standard in newly installed monitoring well MW-24, located west of the entrance into the E-Block lobby (E-124) and downgradient of MW-7.

Chlorinated compounds (cis-1,2-DCE and/or TCE) were detected in monitoring wells MW-5 and MW-7 at concentrations similar to previous sampling rounds. Groundwater samples collected from newly installed monitoring wells MW-20, MW-22 (including the field duplicate) and MW-24 also exhibited concentrations of vinyl chloride, cis-1,2-DCE, p-isopropyltoluene (p-cymene) and/or TCE. Vinly chloride was detected in monitoring well MW-24 at a concentration that exceeded MCP Method 1 GW-2 groundwater cleanup standards, all other concentrations

were below MCP Method 1 GW-2 groundwater cleanup standards. The results from wells in the vicinity of MW-7 show that the area around MW-7 appears to represent the source area of a relatively small area of chlorinated VOC impacts.

Groundwater Elevation Gauging

On February 17, 2010, TRC gauged the monitoring wells throughout the NBHS campus. Consistent with historic well gauging data, the groundwater flows from north to south across the NBHS campus. In addition, localized groundwater mounding was observed in the vicinity of the B-Block, immediately north of the Mechanical Room.

The extensive underdrain system throughout the underside of the NBHS building appears to direct groundwater to the storm sewer during high water events, and appears to influence the contour of the water table.

TRC gauged the new and previously installed monitoring wells prior to collection of groundwater samples on April 7, 2010 and a change in the groundwater conditions was observed. According to preliminary data available from the National Oceanic and Atmospheric Administration (NOAA), the City of New Bedford received 6.84 inches of rainfall in the approximately two week period and a total of 11.77 inches of rainfall in the one month period prior to well gauging activities on April 7, 2010. The significant amount of rainfall prior to the April 7, 2010 gauging event was an indication that the groundwater, at a minimum, was at a seasonal high groundwater elevation. Further evaluation of the groundwater elevation at the NBHS campus was undertaken to better understand average groundwater elevations and groundwater elevation fluctuations at the Site.

TRC conducted a third synoptic well gauging event at the NBHS campus on May 17, 2010. As anticipated, a drop in the groundwater elevation throughout the NBHS campus when compared to the April 7, 2010 gauging event was observed attributable to less precipitation over that timeframe. In addition, the groundwater mounding, present in the vicinity of the Mechanical Room in February 2010, was not present based on the May 17, 2010 gauging results. Groundwater flow continued to generally trend from north to south across the NBHS campus, while shifting to a more southwesterly direction in the southern portion of the campus.

Previous estimated groundwater elevation contour maps are presented in TRC's IRA Plan and previous IRA Status Report submitted on May 24, 2010.

Temporary Subslab Soil Gas Sampling Points

On February 15, 2010 during the February school vacation, TRC collected soil vapor samples from temporary sample points installed at 11 locations throughout A-, C-, and D-Blocks of the NBHS building. The sample locations are illustrated on Figure 2, and were designed to provide screening information regarding potential subslab vapor impacts in the vicinity of A-, C- and D-Blocks.

The results of the subslab soil gas analysis are summarized in Table 4. The analytical results show detectable concentrations of various VOCs in all 11 sampling locations. The soil vapor results are compared to a screening level threshold equal to 10-times the Indoor Air Threshold Values (IATVs; MassDEP, 2008), consistent with guidance provided by MassDEP (2009). Concentrations above the screening level thresholds were found in samples from four locations: TVP-1 (acetone, benzene, TCE, and isopropyl benzene), TVP-3 (benzene and TCE), TVP-10 (4-methyl 2-pentanone), and TVP-11 (acetone and PCE). TVP-1 and TVP-3 are located in A-Block. TVP-10 is located in the wood shop and TVP-11 is located in the auto shop.

Permanent Soil Gas Sampling Points

On February 19, 2010 during the February school vacation, following receipt of the temporary soil gas sample point results, TRC selected eight (8) locations for the installation of permanent soil gas sampling points. The permanent soil gas sampling points were installed consistent with the construction details provided in Figure 3. Seven of the eight locations (PVP-1 through PVP-5, PVP-7 and PVP-8) were previously used as temporary soil vapor sample locations. The eighth location (PVP-6) was installed in the Mechanical Room after a precautionary survey of the area for utilities by ground penetrating radar (GPR). The permanent points were installed in the locations illustrated on Figure 2.

On April 9, 2010, TRC collected a soil vapor sample (PVP-6) from the permanent soil gas point in the Mechanical Room (see Figure 2). A soil vapor sample was not previously collected for the Mechanical Room during the February 2010 sampling event due to utility obstructions.

All eight permanent soil gas points were sampled by TRC on April 20, 2010. The samples were collected using evacuated stainless steel canisters consistent with the methods employed during the sampling of the temporary soil gas points described in the IRA Plan. The soil vapor samples were submitted to Alpha for analysis by EPA Method TO-15.

The results of the subslab soil gas analysis were detailed in the IRA Status Report submitted on May 24, 2010 and are summarized herein (TRC, 2010b). The analytical results show detectable concentrations of various VOCs at all eight sampling locations. The soil vapor results were compared to a screening level threshold equal to 10-times the IATVs (MassDEP, 2008), consistent with guidance provided by MassDEP (2009). No VOCs were detected above the screening level thresholds in six out of the eight permanent vapor points.

VOCs were found above screening level thresholds in samples PVP-6 (Mechanical Room), during both the April 9, 2010 and April 20, 2010 sampling events, and PVP-8 (Auto Shop). On April 9, 2010, sample PVP-6 exhibited concentrations of 1,1-dichloroethene (1,1-DCE), cis-1,2-DCE, PCE, trans-1,2-DCE, TCE, and VC above threshold screening values. On April 20, 2010, each of these compounds, with the exception of PCE, was again detected above threshold screening levels. Sample PVP-8 exhibited PCE in excess of the applicable threshold screening level.

The previously detected elevated concentration of acetone in the Auto Shop soil gas sample was not repeated during the April 20, 2010 sampling event. Previous detections of VOCs above screening level thresholds at locations TVP-1 (Classroom A-4-115), TVP-3 (Classroom A-3-115) and TVP-10 (Wood Shop) were not confirmed during the April 20, 2010 sampling event as detectable concentrations of VOCs in samples PVP-1 (Classroom A-4-115), PVP-2 (Classroom A-3-115), and PVP-7 (Wood Shop) were all below threshold screening values (Table 4).

Due to the presence of VOCs in soil vapors above threshold screening levels in the Mechanical Room and Auto Shop and VOCs in indoor air above threshold screening levels in the Mechanical Room and Lecture Room adjacent to the Auto Shop, TRC evaluated seep mitigation measures (Mechanical Room) and conducted supplemental investigation activities (Mechanical Room and Auto Shop / Lecture Room area). Further detail regarding these activities is provided in Section II below.

Fact Sheet

TRC prepared a Fact Sheet regarding IRA activities which the City published on February 5, 2010. An updated version of the February 5, 2010 Fact Sheet was published by the City on March 19, 2010. In addition, Fact Sheets summarizing investigation activities throughout the NBHS campus, including IRA-related activities, were published in June and July, 2010.

The Fact Sheets served to notify the public that it is safe to occupy the high school, they provide a description of the investigations completed to date, they describe the next steps in response actions, and they identify where additional information could be obtained from the City. Any future Fact Sheets that relate to RTN 4-22409 will be included with future regulatory submittals.

II IMMEDIATE RESPONSE ACTION STATUS REPORT (310 CMR 40.0425)

This IRA Status Report is organized according to the information needs set forth under 310 CMR 40.0425(3)(a) through (e) of the MCP. This section describes activities performed subsequent to activities described in the IRA Plan submitted on March 22, 2010 and previous IRA Status Report submitted on May 24, 2010.

(a) The Status of Assessment and/or Remedial Actions

The detection of chlorinated VOCs in groundwater (MW-5), seep water (BRM-S-3 and FIP-S-1), and indoor air (TRC-IA-1) confirms a CEP in the Mechanical Room at NBHS. TRC continued to investigate the potential for CEP conditions in other locations within NBHS. TRC also conducted further investigation of the lateral extent of groundwater impacts observed in the vicinity of the flagpole island (MW-7 and MW-24). The results of additional investigation activities to date are detailed in Section II(b) below. Laboratory data packages associated with samples discussed in the following section are included in Appendix A.

TRC's IRA Plan also outlined potential CEP mitigation measures to be undertaken during the IRA. Those mitigation measures implemented to date are described in the IRA Plan, TRC's previous IRA Status Report (TRC, 2010b), and in the following section. Evaluation and implementation of some mitigation measures (e.g., seep mitigation, etc.) are ongoing.

Evaluation of Other Potential Sources

TRC's initial evaluations suggest the potential for some of the VOCs in NBHS indoor air to originate from sources other than groundwater beneath the NBHS building. On February 3, 2010, TRC personnel conducted an initial inventory, including compiling available Material Safety Data Sheet (MSDS) information, of chemical products stored within or in the vicinity of the Mechanical Room. As documented in Appendix D of the IRA Status Report submitted on May 24, 2010, benzene and chlorinated solvent content was noted in a number of products (TRC, 2010b). The potential for additional other interior and ambient (i.e., vehicle exhaust) sources also exists.

The City will work to manage potential interior sources of vapor from products stored in the Mechanical Room. Compilation of the MSDS information is ongoing and will be detailed in a future regulatory submittal. The City has begun relocation and/or disposal of products that may be contributing to indoor air VOC concentrations in the Mechanical Room. This effort is ongoing and, following mitigation of the Mechanical Room seep, relocation of additional products with benzene or chlorinated VOC content may be necessary to minimize the influence of chemical product use and storage practices upon indoor air concentration in the Mechanical Room.

On May 6, 2010, TRC initiated an inventory of the products used and/or stored in the Auto Shop that may contribute to the VOC concentrations measured in the indoor air sample collected from

the nearby Lecture Room (see Appendix D of the IRA Status Report submitted on May 24, 2010). Because the potential exists for VOCs in indoor air to originate from other sources, such as aerosol brake cleaning products and degreasing products, additional investigation of the indoor air was conducted in August 2010. The results of the additional indoor air investigation are described in Section 2(b) below.

Seepage Mitigation

During the February school vacation, TRC invited several specialty vendors to the NBHS Mechanical Room to view the seepage condition and provide a proposal for seep mitigation. The specialty vendor bids are currently being evaluated by the City.

(b) New Site Information and Data

Supplemental investigation activities completed under the IRA during this reporting period included: additional indoor air sampling, additional monitoring well installation and groundwater sampling. Following review of the data, an updated indoor air risk evaluation was completed (Appendix B).

Supplemental Indoor Air Sampling

As detailed in the IRA Plan and the previous IRA Status Report (TRC, 2010b), indoor air samples TRC-IA-1 through TRC-IA-5 were collected from five rooms within the NBHS building in January 2010 (see Figure 2). Sampling of the Mechanical Room (B-114) detected the presence of chlorinated VOCs in the indoor air. Benzene, other petroleum-related compounds, and chlorinated VOCs were also detected in the indoor air sample in classroom A-3-112 from the A-Block. TRC's preliminary risk assessment indicated that there is no significant risk to the health of the building occupants based on criteria established by the MassDEP. Despite the initial finding of No Significant Risk, further investigations were conducted.

On April 20, 2010, TRC collected twelve (12) additional indoor air samples for analysis of VOCs. Ten of the twelve indoor air samples collected on April 20, 2010 had no VOCs detected in excess of screening thresholds. This included re-sampling TRC-IA-5 (Classroom A-3-112) which had previously exhibited concentrations of benzene and VC exceeding the screening thresholds on January 31, 2010.

Sample TRC-IA-1 (Mechanical Room) exhibited the presence of benzene, cis-1,2-DCE, TCE, and VC above the screening thresholds. Sample TRC-IA-15 (Lecture Room) exhibited benzene, PCE, and total xylenes in excess of screening thresholds. Based on these data, the potential for some of the VOCs in indoor air to originate from subsurface impacts exists. However, given the proximity of sample location TRC-IA-15 to the Auto Shop (D-116), the potential also exists for VOCs in indoor air to originate from other sources, such as aerosol brake cleaning products and degreasing products.

Following the April 20, 2010 sampling event, TRC provided an updated site-specific risk evaluation in Appendix E of the May 24, 2010 IRA Status Report (TRC, 2010b). The evaluation indicated that, based on the sampling conducted in January and April 2010, there is no IH condition or chronic risk/hazard above MCP risk limits associated with current indoor air exposures. Despite the finding of no significant risk, further investigation was conducted to delineate potential indoor air VOC impacts and evaluate the impact of potential non-vapor intrusion sources associated with the Auto Shop.

Following an inventory of the products used and/or stored in the Auto Shop that may contribute to the VOC concentrations measured in the indoor air sample collected from the nearby Lecture Room (see Appendix D of the IRA Status Report submitted on May 24, 2010), additional indoor air samples were collected on August 24, 2010. Indoor air samples IA-1 through IA-3 (including a field duplicate) were collected over a 24-hour period using evacuated stainless steel canisters. Since the sampling took place over the summer vacation period, the NBHS HVAC system was operating in an efficiency mode. The samples were collected from the following bottom floor interior locations at NBHS, illustrated on Figure 2:

- Classroom (A-3-112) – Sample designation IA-1 (duplicate analysis performed)
- Mechanical Room (B-114) – Sample designation IA-2
- Lecture Room (D-120) – Sample designation IA-3

The samples were submitted to Alpha for analysis by EPA Method TO-15. VOCs were detected in indoor air based on the samples collected by TRC and are summarized in Table 3. The analytical results are compared to threshold screening levels (MassDEP, 2009).

- Sample IA-1 (Classroom A-3-112) detected chloroform above the threshold screening levels at slightly higher concentrations relative to the January 31, 2010 and April 20, 2010 sampling events. No additional VOCs were detected in excess of threshold screening levels. Furthermore, subsurface VOC impacts have not been found in the vicinity of this room and no link has been found between the concentrations measured in the indoor air of the classroom in January and August 2010 and the subsurface environment in this location.
- Sample IA-2 (Mechanical Room) exhibited benzene and chloroform above the threshold screening levels at concentrations comparable to the January 31, 2010 and April 20, 2010 sampling events. No additional VOCs were detected in excess of threshold screening levels.
- No VOCs in sample IA-3 (Lecture Room) were above threshold screening levels (see Table 3). Given the results of sample TRC-IA-5 collected on April 20, 2010 and the proximity of the sample location to the Auto Shop (D-116), the potential exists for VOCs in indoor air to originate from other sources, such as aerosol brake cleaning products and degreasing products. Sample IA-3 was collected from the Lecture Room following suspension of activities within the Auto Shop to minimize non-vapor intrusion interferences that could impact the sample results. No VOCs were detected in excess of threshold screening levels, subsurface VOC impacts have not been found in the vicinity

of this room and no link has been found between the concentrations measured in the indoor air of the classroom in April 2010 and the subsurface environment in this location.

TRC evaluated the indoor air results by performing site-specific risk and hazard calculations for each room where an indoor air sample had been collected. The risk hazard calculations, provided in Appendix B, assume a chronic worker exposure scenario (8 hours of exposure per day, 250 days per year for 27 years). The calculations indicated that risks and hazards are at or below the MCP Risk Limits of an Excess Lifetime Cancer Risk (ELCR) of 1E-05 and a Hazard Index (HI) of 1 for each room evaluated. The site-specific risk and hazard calculation protocol is consistent with that conducted for the neighboring KMS for VOCs and PCBs.

The evaluation indicates that, based on the sampling conducted in January, April and August 2010, there is no IH condition or chronic risk/hazard above MCP risk limits associated with current indoor air exposures. All compounds detected in indoor air were included in the risk and hazard calculations even though some of the detections may be associated with VOCs sources unrelated to vapor intrusion. As more site-specific data are gathered, VOCs identified as being related to potential non-vapor intrusion sources may be eliminated in future risk evaluations.

Supplemental Well Installation and Groundwater Sampling

As described in the IRA Plan, groundwater samples collected in January and February 2010 detected chlorinated VOCs above MCP Method 1 GW-2 groundwater cleanup standards in monitoring well MW-7, located in front of the NBHS building near the flagpole. Groundwater sampling conducted in April 2010 evaluated the lateral extent of groundwater impacts observed in MW-7. During this IRA status period, TRC conducted additional well installation and sampling in advance of remedial planning.

Between August 24 and August 30, 2010, TRC installed five (5) shallow and two (2) deep overburden monitoring wells throughout the NBHS campus. Shallow monitoring wells MW-25 and MW-26 were installed along Parker Street to bound VOC impacts in the vicinity of the flagpole island (MW-7 and MW-24). Shallow monitoring wells MW-27 through MW-29 were installed after a precautionary survey of the area for utilities by GPR on August 20, 2010. These monitoring wells were installed within the Mechanical Room and downgradient pipe tunnel to define the lateral extents of VOC impacts detected in aqueous seep samples. Deeper monitoring wells MW-5D and MW-7D were installed to define the vertical extent of impacts in the vicinity of the Mechanical Room and flagpole island, respectively. The newly installed wells were surveyed by Land Planning of Hanson, Massachusetts. The well locations are depicted in Figure 2. Well installation logs for the newly installed monitoring wells are provided in Appendix C.

TRC utilized New England Geotech (NEG) of Jamestown, Rhode Island, to perform drilling activities at the Site under TRC field supervision. The borings were advanced using Geoprobe® direct push methods. The samples were visually examined in the field for evidence of petroleum impacts and field screened using the MassDEP jar headspace methodology and a PID. During installation of monitoring wells MW-27, MW-28 and MW-29, headspace readings above

background were detected. This included maximum headspace readings of 1,766, 84.6 and 67.5 ppmv in monitoring wells MW-27, MW-28 and MW-29, respectively (see Appendix C). Due to the headspace readings, soil samples MW-27 (6-8 feet) and MW-28 (8-10 feet) were collected and submitted to Con-Test for laboratory VOC analysis (SW-846 Method 8260B). The soil sample results are included in Table 5. Chlorinated VOCs in excess of Method 1 S1 soil cleanup standards were detected in each of the soil samples, including cis-1,2-DCE and TCE in soil boring MW-27 and TCE in soil boring MW-28 (see Table 5).

Soil samples were also collected from soil borings MW-7D and MW-28 for geotechnical parameters to aid in remedial design planning. These samples were submitted to Con-Test for total organic carbon (TOC; SW-846 Method 9060) analysis (see Table 5) and GeoTesting Express of Boxborough, Massachusetts for grain size (ASTM D 422-63, reapproved 2002) and Atterburg Limits (ASTM D 4318-05) analysis (see Appendix A).

TRC developed the seven newly installed wells on August 26, August 30 and September 1, 2010. During developmental purging of MW-27 on August 30, 2010, small globules of dense non-aqueous phase liquid (DNAPL) were observed and an odor was noted. A sample of the DNAPL was collected for laboratory fingerprint analysis. The results of the fingerprint analysis are presented in Table 6 and indicated the DNAPL was composed of chlorinated VOCs, particularly TCE. Following development, no measurable product was present in monitoring well MW-27 based on interface probe measurements.

Following well development, TRC collected samples from the newly installed monitoring wells for VOC analysis in accordance with EPA Region 1 low-flow sampling techniques. Concurrently, TRC also sampled several existing TRC wells on the NBHS campus in the vicinity of the Mechanical Room, also by low-flow procedures. A total of seventeen (17) monitoring wells were sampled during the period from September 8 through September 13, 2010. The wells sampled are identified below and their locations are illustrated on Figure 2. Groundwater sampling logs associated with the September 2010 sampling event are provided in Appendix D.

- Existing Wells:
    - MW-4
    - MW-5
    - MW-7
    - MW-11
    - MW-18
    - MW-20
    - MW-21
    - MW-22
    - MW-23
    - MW-24
- Newly Installed Wells:

- MW-5D
- MW-7D
- MW-25
- MW-26
- MW-27
- MW-28
- MW-29

The groundwater samples were submitted to Alpha for analysis of VOCs (SW-846 Method 8260B). Select groundwater samples (MW-5, MW-5D, MW-7, MW-7D, MW-27, MW-28 and MW-29) were also analyzed for Nitrogen/Nitrate (SM 4500-NO3-F), Sulfate (Method 9038) and TOC (Method 9060). The results of these analyses are summarized in Table 2. No VOCs were detected in excess of MCP Method 1 GW-2 groundwater cleanup standards in fifteen out of the seventeen monitoring wells sampled in September 2010. Newly installed monitoring well MW-27 (Mechanical Room) exhibited concentrations of cis-1,2-DCE, trans-1,2-DCE, TCE and VC above their respective MCP Method 1 GW-2 groundwater cleanup standards. In addition, VC was detected in excess of the MCP Method 1 GW-2 groundwater cleanup standard in newly installed monitoring well MW-28, located approximately 29 feet south of MW-27 in the Mechanical Room. The results from monitoring wells within the Mechanical Room indicate that the area around MW-27 appears to where highest VOC impacts have come to be located.

No VOCs were detected in excess of MCP Method 1 GW-2 groundwater cleanup standards in newly installed shallow monitoring well MW-29 or deep overburden monitoring wells MW-5D and MW-7D (including the field duplicate) in September 2010. No VOCs were detected in newly installed monitoring wells MW-25 and MW-26.

No VOCs were detected in monitoring wells MW-4, MW-11, MW-18, MW-21, MW-22 and MW-23. Chlorinated compounds (cis-1,2-DCE, PCE, TCE and/or VC) were detected in monitoring wells MW-5, MW-7, MW-20 and MW-24 at concentrations similar to previous sampling rounds. The results from wells in the vicinity of MW-7 continue to show that the area around MW-7 appears to be a separate, relatively small area where chlorinated relatively higher VOC impacts have come to be located.

Based on the September 2010 groundwater sampling, additional investigation was required to define the lateral and vertical extent of VOC impacts beneath the Mechanical Room. In addition, further definition of potential VOC impacts in the vicinity of the flagpole island was necessary.

On October 13, 2010, TRC installed four (4) shallow overburden monitoring wells at the NBHS campus. Monitoring well MW-30 was installed west of the E-Block (Girl's Gym; E-117) to determine if localized VOC impacts in the vicinity of the flagpole potentially were impacting the NBHS building. Monitoring wells MW-31, MW-32 and MW-33 were installed after a precautionary survey of the area for utilities by GPR on October 7, 2010. These monitoring wells were installed within the Mechanical Room (MW-31 and MW-32) and Kitchen Storage (Room B-156; MW-33) to define the lateral extent of the VOC impact in the vicinity of sub-slab monitoring wells MW-27 and MW-28. The newly installed wells were surveyed by Land

Planning of Hanson, Massachusetts. The well locations are depicted in Figure 2. Well installation logs for the newly installed monitoring wells are provided in Appendix C.

TRC utilized NEG to perform drilling activities at the Site under TRC field supervision. The borings were advanced using Geoprobe® direct push methods. The samples were visually examined in the field for evidence of petroleum impacts and field screened using the MassDEP jar headspace methodology and a PID. Headspace readings ranged from non-detect (background) to 1.2 ppmv.

TRC developed the four newly installed wells on October 13 and 14, 2010. Following well development, TRC collected samples from the newly installed monitoring wells for VOC analysis in accordance with EPA Region 1 low-flow sampling techniques. Concurrently, TRC also sampled several existing TRC wells on the NBHS campus in the vicinity of the Mechanical Room and flagpole island, also by low-flow procedures. A total of eight (8) monitoring wells were sampled on October 21 and 22, 2010. The wells sampled are identified below and their locations are illustrated on Figure 2. Groundwater sampling logs associated with the October 2010 sampling event are provided in Appendix D.

- Existing Wells:
    - MW-7
    - MW-24
    - MW-27
    - MW-28
- Newly Installed Wells:
    - MW-30
    - MW-31
    - MW-32
    - MW-33

The groundwater samples were submitted to Alpha for analysis of VOCs (SW-846 Method 8260B). The results of these analyses are summarized in Table 2. No VOCs were detected in excess of MCP Method 1 GW-2 groundwater cleanup standards in five out of the eight monitoring wells sampled in October 2010, including newly installed monitoring well MW-32 located approximately 16 feet east of MW-27. No VOCs were detected in newly installed monitoring wells MW-31 and MW-33, located approximately 31 feet west of MW-27 and approximately 20 feet north of MW-27, respectively. Chlorinated compounds were once again detected in monitoring wells MW-27 and MW-28 at concentrations in excess of MCP Method 1 GW-2 groundwater cleanup standards.

No VOCs were detected in newly installed monitoring wells MW-30, located east of E-Block (Girl's Gym; E-117). Chlorinated compounds (cis-1,2-DCE, PCE, TCE and/or VC) were detected in monitoring wells MW-7 and MW-24 at concentrations similar to previous sampling

rounds, with the exception that no TCE was detected in MW-7 in October 2010. The results from wells in the vicinity of MW-7 continue to show that the area around MW-7 appears to be a separate, relatively small area where chlorinated VOC impacts have come to be located.

Based on the October 2010 groundwater sampling results, the lateral extent of VOC impacts in the vicinity of the Mechanical Room and flagpole island have been defined. In addition, the vertical extent of VOC impacts in the vicinity of the flagpole has been defined by the installation and sampling of monitoring well MW-7D. However, additional investigation was necessary to define the vertical extent of VOC impacts in the vicinity of the Mechanical Room.

On November 8 and 9, 2010, TRC installed one (1) deep overburden monitoring well (MW-27D) in the Mechanical Room. The newly installed monitoring well was surveyed by Land Planning of Hanson, Massachusetts. The well location is depicted in Figure 2. A well installation log for monitoring well MW-27D is provided in Appendix C.

TRC utilized Geologic-Earth Exploration, Incorporated of Norfolk, Massachusetts to perform drilling activities under TRC field supervision. The boring was advanced using drive and wash methods. The drill cuttings and split spoons samples were visually examined in the field for evidence of impacts and field screened using the MassDEP jar headspace methodology and a PID. The headspace readings ranged from background to 3.8 ppmv.

TRC developed monitoring well MW-27D on November 11, 2010. Following well development, TRC collected a sample from the newly installed monitoring well for VOC analysis in accordance with EPA Region 1 low-flow sampling techniques. A groundwater sampling log associated with the November 18, 2010 sampling event is provided in Appendix D.

The groundwater sample from MW-27D was submitted to Alpha for analysis of VOCs (SW-846 Method 8260B). The results of this analysis will be reported as part of a future regulatory submittal.

Supplemental Groundwater Elevation Gauging

Prior to September 2010, TRC performed three synoptic well gauging events at the NBHS campus on February 17, 2010, April 7, 2010 and May 17, 2010. Consistent with historic well gauging data, the groundwater was observed to generally flow from north to south across the NBHS campus. However, localized groundwater mounding has been observed in the vicinity of B-Block, immediately north of the Mechanical Room and, at a minimum, a seasonal high groundwater elevation was observed during the April 2010 gauging event. In addition, the extensive underdrain system beneath the NBHS building appears to direct groundwater to the storm sewer during high water events, and appears to influence the contour of the water table.

TRC conducted an additional synoptic well gauging event at the NBHS campus on September 7, 2010. Groundwater elevation data, including the previous synoptic well gauging events, are provided in Table 7. TRC prepared a revised interpreted groundwater contour map, illustrated in Figure 4. The groundwater contour map depicts a drop in the groundwater elevation throughout

the NBHS campus when compared to the May 17, 2010 gauging event. Groundwater flow continues to generally trend from north to south across the NBHS campus, while shifting to a more southerly direction in the southern portion of the campus.

Supplemental Seep Sampling

TRC has been prepared to collect additional seep samples from locations within the Mechanical Room where VOCs had previous been detected (BRM-S-3 and FIP-S-1). However, as historically has tended to occur, the seeps have dried during the summer months and the collection of additional seep samples during this reporting period was not feasible or deemed necessary for the delineation of the nature and extent of impacts. The locations of previous seep samples are shown in Figure 2.

TRC will continue to evaluate the Mechanical Room seeps.

(c) Plans for the Management of Investigation or Remediation Waste

IRA activities have been limited to assessment and mitigation measures at the NBHS campus. These activities have generated a limited amount of investigation-derived wastes. However, no remediation waste or remedial additives have been generated to date.

During well development, purging and sampling activities in August, October and November 2010, approximately seven 55-gallon drums with well development water and purge water were generated. These drums are temporarily staged and secured onsite pending offsite disposal. Shipping documents associated with transportation of the drummed development and purge water will be included in a future regulatory submittal.

Additional monitoring wells were installed at the NBHS campus in August, October and November 2010. Soil cuttings generated during well installation were containerized in three 55-gallon drums. These drums are temporarily staged and secured onsite pending offsite disposal. Shipping documents associated with transportation of the drummed soil material will be included in a future regulatory submittal.

There have been no other remediation wastes generated under this IRA.

(d) MassDEP-Required Information

An IH screening evaluation was performed and submitted with the IRA Plan and an updated version was included in TRC's previous IRA Status Report submitted to MassDEP on May 24, 2010. A further update is provided herein (see Appendix B). No additional information has been requested by MassDEP.

(e) LSP Opinion

The objective of this IRA was to characterize groundwater, seep water, soil vapor and indoor air to determine if vapor migration has occurred, characterize VOCs in the groundwater, storm sewer lines, and sanitary sewer lines to determine if any VOC migration from the groundwater to the storm and sanitary sewer infrastructure has occurred and implement mitigation measures associated with an SRM condition at the NBHS building.

This IRA Status Report has been prepared in accordance with 310 CMR 40.0425 as set forth in the MCP.

David M. Sullivan

David M. Sullivan, LSP, CHMM
TRC Environmental Corporation
Licensed Site Professional No. 1488

11/29/2010

Date

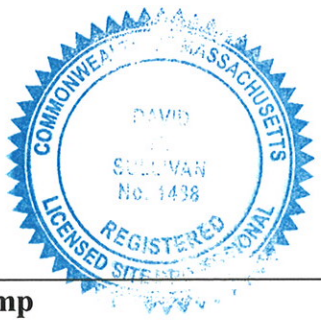

Stamp

III REFERENCES

EPA, 2009 — Risk Management Program Guidance for Offsite Consequence Analysis, United States Environmental Protection Agency, Office of Solid Waste and Emergency Response, EPA 550-B-99-009, March 2009.

MassGIS, 2008 — Massachusetts Geographic Information System (MassGIS), On-line MassDEP Priority Resource Map. Accessed July 28, 2008. http://maps.massgis.state.ma.us/21e/viewer.htm

MassDEP, 2008 — Risk Management Criteria - MassDEP Indoor Air Threshold Values for the Evaluation of a Vapor Intrusion Pathway, Attachment C, updated June 26, 2008.

MassDEP, 2009 — Indoor Air Guidance. June 2009 Draft – Prepared by MassDEP for Discussion Purposes Only.

TRC, 2008 — *Data Summary Report, New Bedford High School, New Bedford, Massachusetts.* Prepared for: City of New Bedford Department of Environmental Stewardship. Prepared by: TRC Environmental Corporation. December 2008.

TRC, 2010a — *Immediate Response Action Plan, New Bedford High School Substantial Release Migration / Critical Exposure Pathway, 230 Hathaway Boulevard, New Bedford, Massachusetts.* Prepared for: City of New Bedford Department of Environmental Stewardship. Prepared by: TRC Environmental Corporation. March 2010.

TRC, 2010b — *Immediate Response Action Status Report - New Bedford High School Substantial Release Migration / Critical Exposure Pathway, 230 Hathaway Boulevard, New Bedford, Massachusetts.* Prepared for: City of New Bedford Department of Environmental Stewardship. Prepared by: TRC Environmental Corporation. May, 2010.

TABLES

Table 1
Summary of Analytical Results for Aqueous Seep Samples -- December 2009 and January 2010
New Bedford High School
New Bedford, Massachusetts

Analysis	Analyte		Sample ID:	BRM-S-1			BRM-S-2			BRM-S-3				FIP-S-1		
			Sample Date:	12/2/2009	1/7/2010	1/30/2010	12/2/2009	1/7/2010	1/30/2010	12/2/2009	1/7/2010	1/30/2010	1/30/2010	12/2/2009	1/7/2010	1/30/2010
		GW-2	GW-3										Field Dup			
VOCs																
(ug/L)	Acetone	50,000	50,000	50 U	50 U	5.0 U	50 U	50 U	5.0 U	50 U	50 U	5.0 U	5.0 U	50 U	50 U	5.0 U
	tert-Amyl Methyl Ether (TAME)	NS	NS	0.50 U	0.50 U	2.0 U	0.50 U	0.50 U	2.0 U	0.50 U	0.50 U	2.0 U	2.0 U	0.50 U	0.50 U	2.0 U
	Benzene	2,000	10,000	1.0 U	1.0 U	1.0 U	1.0 U	1.0 U	1.0 U	1.0 U	1.0 U	1.0 U	1.0 U	1.0 U	1.0 U	1.0 U
	Bromobenzene	NS	NS	1.0 U	1.0 U	1.0 U	1.0 U	1.0 U	1.0 U	1.0 U	1.0 U	1.0 U	1.0 U	1.0 U	1.0 U	1.0 U
	Bromochloromethane	NS	NS	1.0 U	1.0 U	1.0 U	1.0 U	1.0 U	1.0 U	1.0 U	1.0 U	1.0 U	1.0 U	1.0 U	1.0 U	1.0 U
	Bromodichloromethane	6	50,000	1.0 U	5.0 U	1.0 U	1.0 U	5.0 U	1.0 U	1.0 U	5.0 U	1.0 U	1.0 U	1.0 U	5.0 U	1.0 U
	Bromoform	700	50,000	5.0 U	10 U	1.0 U	5.0 U	10 U	1.0 U	5.0 U	10 U	1.0 U	1.0 U	5.0 U	10 U	1.0 U
	Bromomethane	7	800	2.0 U	2.0 U	5.0 U	2.0 U	2.0 U	5.0 U	2.0 U	2.0 U	5.0 U	5.0 U	2.0 U	2.0 U	5.0 U
	2-Butanone (MEK)	50,000	50,000	20 U	20 U	10 U	20 U	20 U	10 U	20 U	20 U	10 U	10 U	20 U	20 U	10 U
	n-Butylbenzene	7,000[1]	50,000[1]	1.0 U	1.0 U	1.0 U	1.0 U	1.0 U	1.0 U	1.0 U	1.0 U	1.0 U	1.0 U	1.0 U	1.0 U	1.0 U
	sec-Butylbenzene	7,000[1]	50,000[1]	1.0 U	1.0 U	1.0 U	1.0 U	1.0 U	1.0 U	1.0 U	1.0 U	1.0 U	1.0 U	1.0 U	1.0 U	1.0 U
	tert-Butylbenzene	7,000[1]	50,000[1]	1.0 U	1.0 U	1.0 U	1.0 U	1.0 U	1.0 U	1.0 U	1.0 U	1.0 U	1.0 U	1.0 U	1.0 U	1.0 U
	tert-Butyl Ethyl Ether (TBEE)	NS	NS	0.50 U	0.50 U	2.0 U	0.50 U	0.50 U	2.0 U	0.50 U	0.50 U	2.0 U	2.0 U	0.50 U	0.50 U	2.0 U
	Carbon Disulfide	NS	NS	3.0 U	5.0 U	1.0 U	3.0 U	5.0 U	1.0 U	3.0 U	5.0 U	1.0 U	1.0 U	3.0 U	5.0 U	1.0 U
	Carbon Tetrachloride	2	5,000	1.0 U	1.0 U	1.0 U	1.0 U	1.0 U	1.0 U	1.0 U	1.0 U	1.0 U	1.0 U	1.0 U	1.0 U	1.0 U
	Chlorobenzene	200	1,000	1.0 U	1.0 U	1.0 U	1.0 U	1.0 U	1.0 U	1.0 U	**9.5**	1.0 U	1.0 U	1.0 U	1.0 U	1.0 U
	Chlorodibromomethane	20	50,000	0.50 U	10 U	1.0 U	0.50 U	10 U	1.0 U	0.50 U	10 U	1.0 U	1.0 U	0.50 U	10 U	1.0 U
	Chloroethane	NS	NS	2.0 U	2.0 U	1.0 U	2.0 U	2.0 U	1.0 U	2.0 U	2.0 U	1.0 U	1.0 U	2.0 U	2.0 U	1.0 U
	Chloroform	50	20,000	2.0 U	2.0 U	1.0 U	2.0 U	2.0 U	1.0 U	2.0 U	2.0 U	1.0 U	1.0 U	2.0 U	2.0 U	1.0 U
	Chloromethane	NS	NS	2.0 U	2.0 U	1.0 U	2.0 U	2.0 U	1.0 U	2.0 U	2.0 U	1.0 U	1.0 U	2.0 U	2.0 U	1.0 U
	2-Chlorotoluene	NS	NS	1.0 U	1.0 U	1.0 U	1.0 U	1.0 U	1.0 U	1.0 U	1.0 U	1.0 U	1.0 U	1.0 U	1.0 U	1.0 U
	4-Chlorotoluene	NS	NS	1.0 U	1.0 U	1.0 U	1.0 U	1.0 U	1.0 U	1.0 U	1.0 U	1.0 U	1.0 U	1.0 U	1.0 U	1.0 U
	1,2-Dibromo-3-chloropropane (DBCP)	NS	NS	5.0 U	10 U	5.0 U	5.0 U	10 U	5.0 U	5.0 U	10 U	5.0 U	5.0 U	5.0 U	10 U	5.0 U
	1,2-Dibromoethane (EDB)	2	50,000	0.50 U	0.50 U	1.0 U	0.50 U	0.50 U	1.0 U	0.50 U	0.50 U	1.0 U	1.0 U	0.50 U	0.50 U	1.0 U
	Dibromomethane	NS	NS	1.0 U	1.0 U	1.0 U	1.0 U	1.0 U	1.0 U	1.0 U	1.0 U	1.0 U	1.0 U	1.0 U	1.0 U	1.0 U
	1,2-Dichlorobenzene	2,000	2,000	1.0 U	1.0 U	1.0 U	1.0 U	1.0 U	1.0 U	1.0 U	1.0 U	1.0 U	1.0 U	1.0 U	1.0 U	1.0 U
	1,3-Dichlorobenzene	2,000	50,000	1.0 U	1.0 U	1.0 U	1.0 U	1.0 U	1.0 U	1.0 U	**1.6**	1.0 U	1.0 U	1.0 U	1.0 U	1.0 U
	1,4-Dichlorobenzene	200	8,000	1.0 U	1.0 U	1.0 U	1.0 U	1.0 U	1.0 U	1.0 U	**6.8**	1.0 U	1.0 U	1.0 U	1.0 U	1.0 U
	Dichlorodifluoromethane (Freon 12)	NS	NS	2.0 U	2.0 U	1.0 U	2.0 U	2.0 U	1.0 U	2.0 U	2.0 U	1.0 U	1.0 U	2.0 U	2.0 U	1.0 U
	1,1-Dichloroethane	1,000	20,000	1.0 U	1.0 U	1.0 U	1.0 U	1.0 U	1.0 U	1.0 U	1.0 U	1.0 U	1.0 U	1.0 U	1.0 U	1.0 U
	1,2-Dichloroethane	5	20,000	1.0 U	1.0 U	1.0 U	1.0 U	1.0 U	1.0 U	1.0 U	1.0 U	1.0 U	1.0 U	1.0 U	1.0 U	1.0 U
	1,1-Dichloroethylene	80	30,000	1.0 U	1.0 U	1.0 U	1.0 U	1.0 U	1.0 U	1.0 U	1.0 U	1.0 U	1.0 U	1.0 U	1.0 U	1.0 U
	cis-1,2-Dichloroethylene	100	50,000	1.0 U	1.0 U	1.0 U	1.0 U	1.0 U	1.0 U	**54**	**180**	**24**	**23**	1.0 U	**5.6**	**7.2**
	trans-1,2-Dichloroethylene	90	50,000	1.0 U	1.0 U	1.0 U	1.0 U	1.0 U	1.0 U	**14**	**57**	**8.2**	**8.1**	1.0 U	**1.0**	**1.4**
	1,2-Dichloropropane	3	50,000	1.0 U	1.0 U	1.0 U	1.0 U	1.0 U	1.0 U	1.0 U	1.0 U	1.0 U	1.0 U	1.0 U	1.0 U	1.0 U
	1,3-Dichloropropane	NS	NS	0.50 U	0.50 U	1.0 U	0.50 U	0.50 U	1.0 U	0.50 U	0.50 U	1.0 U	1.0 U	0.50 U	0.50 U	1.0 U
	2,2-Dichloropropane	NS	NS	1.0 U	1.0 U	1.0 U	1.0 U	1.0 U	1.0 U	1.0 U	1.0 U	1.0 U	1.0 U	1.0 U	1.0 U	1.0 U
	1,1-Dichloropropene	NS	NS	2.0 U	2.0 U	1.0 U	2.0 U	2.0 U	1.0 U	2.0 U	2.0 U	1.0 U	1.0 U	2.0 U	2.0 U	1.0 U
	cis-1,3-Dichloropropene	10[2]	200[2]	0.50 U	5.0 U	0.50 U	0.50 U	5.0 U	0.50 U	0.50 U	5.0 U	0.50 U	0.50 U	0.50 U	5.0 U	0.50 U
	trans-1,3-Dichloropropene	10[2]	200[2]	0.50 U	5.0 U	0.50 U	0.50 U	5.0 U	0.50 U	0.50 U	5.0 U	0.50 U	0.50 U	0.50 U	5.0 U	0.50 U
	Diethyl Ether	NS	NS	2.0 U	2.0 U	2.0 U	2.0 U	2.0 U	2.0 U	2.0 U	2.0 U	2.0 U	2.0 U	2.0 U	2.0 U	2.0 U
	Diisopropyl Ether (DIPE)	NS	NS	0.50 U	0.50 U	2.0 U	0.50 U	0.50 U	2.0 U	0.50 U	0.50 U	2.0 U	2.0 U	0.50 U	0.50 U	2.0 U
	1,4-Dioxane	6,000	50,000	50 U	50 U	100 U	50 U	50 U	100 U	50 U	50 U	100 U	100 U	50 U	50 U	100 U
	Ethylbenzene	20,000	5,000	1.0 U	1.0 U	1.0 U	1.0 U	1.0 U	1.0 U	1.0 U	1.0 U	1.0 U	1.0 U	1.0 U	1.0 U	1.0 U
	Hexachlorobutadiene	1	3,000	1.0 U	1.0 U	0.50 U	1.0 U	1.0 U	0.50 U	1.0 U	1.0 U	0.50 U	0.50 U	1.0 U	1.0 U	0.50 U
	2-Hexanone (MBK)	NS	NS	10 U	10 U	1.0 U	10 U	10 U	1.0 U	10 U	10 U	1.0 U	1.0 U	10 U	10 U	1.0 U
	Isopropylbenzene (Cumene)	7,000[1]	50,000[1]	1.0 U	1.0 U	1.0 U	1.0 U	1.0 U	1.0 U	1.0 U	1.0 U	1.0 U	1.0 U	1.0 U	1.0 U	1.0 U
	p-Isopropyltoluene (p-Cymene)	7,000[1]	50,000[1]	1.0 U	1.0 U	1.0 U	1.0 U	1.0 U	1.0 U	1.0 U	1.0 U	1.0 U	1.0 U	1.0 U	1.0 U	1.0 U
	Methyl tert-Butyl Ether (MTBE)	50,000	50,000	1.0 U	1.0 U	2.0 U	1.0 U	1.0 U	2.0 U	1.0 U	1.0 U	2.0 U	2.0 U	1.0 U	1.0 U	2.0 U
	Methylene Chloride	10,000	50,000	5.0 U	5.0 U	1.0 U	5.0 U	5.0 U	1.0 U	5.0 U	5.0 U	1.0 U	1.0 U	5.0 U	5.0 U	1.0 U
	4-Methyl-2-pentanone (MIBK)	50,000	50,000	10 U	10 U	5.0 U	10 U	10 U	5.0 U	10 U	10 U	5.0 U	5.0 U	10 U	10 U	5.0 U
	Naphthalene	1,000	20,000	5.0 U	2.0 U	5.0 U	5.0 U	2.0 U	5.0 U	5.0 U	2.0 U	5.0 U	5.0 U	5.0 U	2.0 U	5.0 U
	n-Propylbenzene	7,000[1]	50,000[1]	1.0 U	1.0 U	1.0 U	1.0 U	1.0 U	1.0 U	1.0 U	1.0 U	1.0 U	1.0 U	1.0 U	1.0 U	1.0 U
	Styrene	100	6,000	1.0 U	1.0 U	1.0 U	1.0 U	1.0 U	1.0 U	1.0 U	1.0 U	1.0 U	1.0 U	1.0 U	1.0 U	1.0 U
	1,1,1,2-Tetrachloroethane	10	50,000	1.0 U	5.0 U	1.0 U	1.0 U	5.0 U	1.0 U	1.0 U	5.0 U	1.0 U	1.0 U	1.0 U	5.0 U	1.0 U
	1,1,2,2-Tetrachloroethane	9	50,000	0.50 U	0.50 U	2.0 U	0.50 U	0.50 U	2.0 U	0.50 U	0.50 U	2.0 U	2.0 U	0.50 U	0.50 U	2.0 U

Table 1
Summary of Analytical Results for Aqueous Seep Samples -- December 2009 and January 2010
New Bedford High School
New Bedford, Massachusetts

Analysis	Analyte	Sample ID:		BRM-S-1			BRM-S-2			BRM-S-3				FP-S-1		
			Sample Date:	12/2/2009	1/7/2010	1/30/2010	12/2/2009	1/7/2010	1/30/2010	12/2/2009	1/7/2010	1/30/2010	1/30/2010	12/2/2009	1/7/2010	1/30/2010
		GW-2	GW-3										Field Dup			
	Tetrachloroethylene	50	30,000	1.0 U	1.0 U	1.0 U	1.0 U	1.0 U	1.0 U	1.0 U	1.0 U	1.0 U	1.0 U	1.0 U	1.0 U	1.0 U
	Tetrahydrofuran	NS	NS	10 U	10 U	5.0 U	10 U	10 U	5.0 U	10 U	10 U	5.0 U	5.0 U	10 U	10 U	5.0 U
	Toluene	50,000	40,000	1.0 U	1.0 U	1.0 U	1.0 U	1.0 U	1.0 U	1.0 U	1.0 U	1.0 U	1.0 U	1.0 U	1.0 U	1.0 U
	1,2,3-Trichlorobenzene	NS	NS	5.0 U	5.0 U	2.0 U	5.0 U	5.0 U	2.0 U	5.0 U	5.0 U	2.0 U	2.0 U	5.0 U	5.0 U	2.0 U
	1,2,4-Trichlorobenzene	2,000	50,000	5.0 U	1.0 U	2.0 U	5.0 U	1.0 U	2.0 U	5.0 U	1.0 U	2.0 U	2.0 U	5.0 U	1.0 U	2.0 U
	1,1,1-Trichloroethane	4,000	20,000	1.0 U	1.0 U	1.0 U	1.0 U	1.0 U	1.0 U	1.0 U	1.0 U	1.0 U	1.0 U	1.0 U	1.0 U	1.0 U
	1,1,2-Trichloroethane	900	50,000	1.0 U	1.0 U	1.0 U	1.0 U	1.0 U	1.0 U	1.0 U	1.0 U	1.0 U	1.0 U	1.0 U	1.0 U	1.0 U
	Trichloroethylene	30	5,000	1.0 U	1.0 U	1.0 U	1.0 U	1.0 U	1.0 U	1.0 U	**6.0**	**1.2**	**1.3**	1.0 U	1.0 U	1.0 U
	Trichlorofluoromethane (Freon 11)	NS	NS	2.0 U	2.0 U	2.0 U	2.0 U	2.0 U	2.0 U	2.0 U	2.0 U	2.0 U	2.0 U	2.0 U	2.0 U	2.0 U
	1,2,3-Trichloropropane	NS	NS	2.0 U	2.0 U	1.0 U	2.0 U	2.0 U	1.0 U	2.0 U	2.0 U	1.0 U	1.0 U	2.0 U	2.0 U	1.0 U
	1,2,4-Trimethylbenzene	7,000[1]	50,000[1]	1.0 U	1.0 U	1.0 U	1.0 U	1.0 U	1.0 U	1.0 U	1.0 U	1.0 U	1.0 U	1.0 U	1.0 U	1.0 U
	1,3,5-Trimethylbenzene	7,000[1]	50,000[1]	1.0 U	1.0 U	1.0 U	1.0 U	1.0 U	1.0 U	1.0 U	1.0 U	1.0 U	1.0 U	1.0 U	1.0 U	1.0 U
	Vinyl Chloride	2	50,000	2.0 U	2.0 U	1.0 U	2.0 U	2.0 U	1.0 U	**2.1**	**34**	**1.4**	**1.3**	2.0 U	2.0 U	**1.3**
	m+p Xylene	9,000	5,000	2.0 U	2.0 U	2.0 U	2.0 U	2.0 U	2.0 U	2.0 U	2.0 U	2.0 U	2.0 U	2.0 U	2.0 U	2.0 U
	o-Xylene	9,000	5,000	1.0 U	1.0 U	2.0 U	1.0 U	1.0 U	2.0 U	1.0 U	1.0 U	2.0 U	2.0 U	1.0 U	1.0 U	2.0 U
EPH (ug/L)	C9-C18 Aliphatics	5,000	50,000	150 U	NA	NA	150 U	NA	NA	150 U	NA	NA	NA	150 U	NA	NA
	C19-C36 Aliphatics	NS	50,000	**190**	NA	NA	150 U	NA	NA	150 U	NA	NA	NA	150 U	NA	NA
	C11-C22 Aromatics	50,000	5,000	100 U	NA	NA	100 U	NA	NA	100 U	NA	NA	NA	100 U	NA	NA
	Acenaphthene	NS	6,000	2.0 U	NA	NA	2.0 U	NA	NA	2.0 U	NA	NA	NA	2.0 U	NA	NA
	Acenaphthylene	10,000	40	2.0 U	NA	NA	2.0 U	NA	NA	2.0 U	NA	NA	NA	2.0 U	NA	NA
	Anthracene	NS	30	2.0 U	NA	NA	2.0 U	NA	NA	2.0 U	NA	NA	NA	2.0 U	NA	NA
	Benzo(a)anthracene	NS	1,000	2.0 U	NA	NA	2.0 U	NA	NA	2.0 U	NA	NA	NA	2.0 U	NA	NA
	Benzo(a)pyrene	NS	500	2.0 U	NA	NA	2.0 U	NA	NA	2.0 U	NA	NA	NA	2.0 U	NA	NA
	Benzo(b)fluoranthene	NS	400	2.0 U	NA	NA	2.0 U	NA	NA	2.0 U	NA	NA	NA	2.0 U	NA	NA
	Benzo(g,h,i)perylene	NS	20	2.0 U	NA	NA	2.0 U	NA	NA	2.0 U	NA	NA	NA	2.0 U	NA	NA
	Benzo(k)fluoranthene	NS	100	2.0 U	NA	NA	2.0 U	NA	NA	2.0 U	NA	NA	NA	2.0 U	NA	NA
	Chrysene	NS	70	2.0 U	NA	NA	2.0 U	NA	NA	2.0 U	NA	NA	NA	2.0 U	NA	NA
	Dibenz(a,h)anthracene	NS	40	2.0 U	NA	NA	2.0 U	NA	NA	2.0 U	NA	NA	NA	2.0 U	NA	NA
	Fluoranthene	NS	200	2.0 U	NA	NA	2.0 U	NA	NA	2.0 U	NA	NA	NA	2.0 U	NA	NA
	Fluorene	NS	40	2.0 U	NA	NA	2.0 U	NA	NA	2.0 U	NA	NA	NA	2.0 U	NA	NA
	Indeno(1,2,3-cd)pyrene	NS	100	2.0 U	NA	NA	2.0 U	NA	NA	2.0 U	NA	NA	NA	2.0 U	NA	NA
	2-Methylnaphthalene	2,000	20,000	2.0 U	NA	NA	2.0 U	NA	NA	2.0 U	NA	NA	NA	2.0 U	NA	NA
	Naphthalene	1,000	20,000	2.0 U	NA	NA	2.0 U	NA	NA	2.0 U	NA	NA	NA	2.0 U	NA	NA
	Phenanthrene	NS	10,000	2.0 U	NA	NA	2.0 U	NA	NA	2.0 U	NA	NA	NA	2.0 U	NA	NA
	Pyrene	NS	20	2.0 U	NA	NA	2.0 U	NA	NA	2.0 U	NA	NA	NA	2.0 U	NA	NA
PAHs (ug/L)	Acenaphthene	NS	6,000	0.30 U	NA	NA	0.30 U	NA	NA	0.30 U	NA	NA	NA	0.30 U	NA	NA
	Acenaphthylene	10,000	40	0.30 U	NA	NA	0.30 U	NA	NA	0.30 U	NA	NA	NA	0.30 U	NA	NA
	Anthracene	NS	30	0.20 U	NA	NA	0.20 U	NA	NA	0.20 U	NA	NA	NA	0.20 U	NA	NA
	Benzo(a)anthracene	NS	1,000	0.050 U	NA	NA	0.050 U	NA	NA	0.050 U	NA	NA	NA	0.050 U	NA	NA
	Benzo(a)pyrene	NS	500	0.10 U	NA	NA	0.10 U	NA	NA	0.10 U	NA	NA	NA	0.10 U	NA	NA
	Benzo(b)fluoranthene	NS	400	0.050 U	NA	NA	0.050 U	NA	NA	0.050 U	NA	NA	NA	0.050 U	NA	NA
	Benzo(g,h,i)perylene	NS	20	0.50 U	NA	NA	0.50 U	NA	NA	0.50 U	NA	NA	NA	0.50 U	NA	NA
	Benzo(k)fluoranthene	NS	100	0.20 U	NA	NA	0.20 U	NA	NA	0.20 U	NA	NA	NA	0.20 U	NA	NA
	Chrysene	NS	70	0.20 U	NA	NA	0.20 U	NA	NA	0.20 U	NA	NA	NA	0.20 U	NA	NA
	Dibenz(a,h)anthracene	NS	40	0.20 U	NA	NA	0.20 U	NA	NA	0.20 U	NA	NA	NA	0.20 U	NA	NA
	Fluoranthene	NS	200	0.50 U	NA	NA	0.50 U	NA	NA	0.50 U	NA	NA	NA	0.50 U	NA	NA
	Fluorene	NS	40	1.0 U	NA	NA	1.0 U	NA	NA	1.0 U	NA	NA	NA	1.0 U	NA	NA
	Indeno(1,2,3-cd)pyrene	NS	100	0.20 U	NA	NA	0.20 U	NA	NA	0.20 U	NA	NA	NA	0.20 U	NA	NA
	2-Methylnaphthalene	2,000	20,000	1.0 U	NA	NA	1.0 U	NA	NA	1.0 U	NA	NA	NA	1.0 U	NA	NA
	Naphthalene	1,000	20,000	1.0 U	NA	NA	1.0 U	NA	NA	1.0 U	NA	NA	NA	1.0 U	NA	NA
	Phenanthrene	NS	10,000	0.050 U	NA	NA	0.050 U	NA	NA	0.050 U	NA	NA	NA	0.050 U	NA	NA
	Pyrene	NS	20	1.0 U	NA	NA	1.0 U	NA	NA	1.0 U	NA	NA	NA	1.0 U	NA	NA
PCBs (ug/L)	Aroclor 1016	5	10	0.0500 U	NA	NA	0.0500 U	NA	NA	0.0500 U	NA	NA	NA	0.0500 U	NA	NA

Table 1
Summary of Analytical Results for Aqueous Seep Samples -- December 2009 and January 2010
New Bedford High School
New Bedford, Massachusetts

Analysis	Analyte		Sample ID:	BRM-S-1			BRM-S-2			BRM-S-3				FIP-S-1		
			Sample Date:	12/2/2009	1/7/2010	1/30/2010	12/2/2009	1/7/2010	1/30/2010	12/2/2009	1/7/2010	1/30/2010	1/30/2010	12/2/2009	1/7/2010	1/30/2010
		GW-2	GW-3										Field Dup			
	Aroclor 1221	5	10	0.0500 U	NA	NA	0.0500 U	NA	NA	0.0500 U	NA	NA	NA	0.0500 U	NA	NA
	Aroclor 1232	5	10	0.0500 U	NA	NA	0.0500 U	NA	NA	0.0500 U	NA	NA	NA	0.0500 U	NA	NA
	Aroclor 1242	5	10	0.0500 U	NA	NA	0.0500 U	NA	NA	0.0500 U	NA	NA	NA	0.0500 U	NA	NA
	Aroclor 1248	5	10	0.0500 U	NA	NA	0.0500 U	NA	NA	0.0500 U	NA	NA	NA	0.0500 U	NA	NA
	Aroclor 1254	5	10	0.0500 U	NA	NA	0.0500 U	NA	NA	0.0500 U	NA	NA	NA	0.0500 U	NA	NA
	Aroclor 1260	5	10	0.0500 U	NA	NA	0.0500 U	NA	NA	0.0500 U	NA	NA	NA	0.0500 U	NA	NA
	Total PCB Amount	5	10	0.0500 U	NA	NA	0.0500 U	NA	NA	0.0500 U	NA	NA	NA	0.0500 U	NA	NA
Metals, total																
(ug/L)	Antimony	NS	8,000	40 U	NA	NA	40 U	NA	NA	40 U	NA	NA	NA	40 U	NA	NA
	Arsenic	NS	900	**9.2**	NA	NA	**11**	NA	NA	**10**	NA	NA	NA	**5.8**	NA	NA
	Barium	NS	50,000	**98**	NA	NA	**76**	NA	NA	**140**	NA	NA	NA	50 U	NA	NA
	Beryllium	NS	200	2.5 U	NA	NA	2.5 U	NA	NA	2.5 U	NA	NA	NA	2.5 U	NA	NA
	Cadmium	NS	4	2.5 U	NA	NA	2.5 U	NA	NA	2.5 U	NA	NA	NA	2.5 U	NA	NA
	Chromium	NS	300	5.0 U	NA	NA	5.0 U	NA	NA	5.0 U	NA	NA	NA	5.0 U	NA	NA
	Lead	NS	10	7.5 U	NA	NA	7.5 U	NA	NA	**220**	NA	NA	NA	7.5 U	NA	NA
	Mercury	NS	20	0.10 U	NA	NA	0.10 U	NA	NA	0.10 U	NA	NA	NA	0.10 U	NA	NA
	Nickel	NS	200	5.0 U	NA	NA	5.0 U	NA	NA	5.0 U	NA	NA	NA	5.0 U	NA	NA
	Selenium	NS	100	25 U	NA	NA	25 U	NA	NA	25 U	NA	NA	NA	25 U	NA	NA
	Silver	NS	7	2.5 U	NA	NA	2.5 U	NA	NA	2.5 U	NA	NA	NA	2.5 U	NA	NA
	Thallium	NS	3,000	30 U	NA	NA	30 U	NA	NA	30 U	NA	NA	NA	30 U	NA	NA
	Vanadium	NS	4,000	25 U	NA	NA	25 U	NA	NA	25 U	NA	NA	NA	25 U	NA	NA
	Zinc	NS	900	**260**	NA	NA	**51**	NA	NA	**150**	NA	NA	NA	**21**	NA	NA
Metals, dissolved																
(ug/L)	Antimony	NS	8,000	40 U	NA	NA	40 U	NA	NA	40 U	NA	NA	NA	40 U	NA	NA
	Arsenic	NS	900	**6.5**	NA	NA	**8.9**	NA	NA	**8.4**	NA	NA	NA	**6.0**	NA	NA
	Barium	NS	50,000	**79**	NA	NA	**73**	NA	NA	**67**	NA	NA	NA	50 U	NA	NA
	Beryllium	NS	200	2.5 U	NA	NA	2.5 U	NA	NA	2.5 U	NA	NA	NA	2.5 U	NA	NA
	Cadmium	NS	4	2.5 U	NA	NA	2.5 U	NA	NA	2.5 U	NA	NA	NA	2.5 U	NA	NA
	Chromium	NS	300	5.0 U	NA	NA	5.0 U	NA	NA	5.0 U	NA	NA	NA	5.0 U	NA	NA
	Lead	NS	10	7.5 U	NA	NA	7.5 U	NA	NA	7.5 U	NA	NA	NA	7.5 U	NA	NA
	Mercury	NS	20	0.10 U	NA	NA	0.10 U	NA	NA	0.10 U	NA	NA	NA	0.10 U	NA	NA
	Nickel	NS	200	5.0 U	NA	NA	5.0 U	NA	NA	5.0 U	NA	NA	NA	5.0 U	NA	NA
	Selenium	NS	100	25 U	NA	NA	25 U	NA	NA	25 U	NA	NA	NA	25 U	NA	NA
	Silver	NS	7	2.5 U	NA	NA	2.5 U	NA	NA	2.5 U	NA	NA	NA	2.5 U	NA	NA
	Thallium	NS	3,000	30 U	NA	NA	30 U	NA	NA	30 U	NA	NA	NA	30 U	NA	NA
	Vanadium	NS	4,000	25 U	NA	NA	25 U	NA	NA	25 U	NA	NA	NA	25 U	NA	NA
	Zinc	NS	900	**160**	NA	NA	**43**	NA	NA	**48**	NA	NA	NA	**25**	NA	NA

Notes:
ug/L - micrograms per liter.
NA - Sample not analyzed for the listed analyte.
NS - No MassDEP standards exist for this compound.
U - Compound was not detected at specified quantitation limit.
Values in **Bold** indicate the compound was detected.
Values shown in Bold and shaded type exceed one or more of the listed MassDEP Method 1 standards
VOCs - Volatile Organic Compounds.
EPH - Extractable Petroleum Hydrocarbons.
PAHs - Polynuclear Aromatic Hydrocarbons.
PCBs - Polychlorinated Biphenyls.
(1) - MassDEP Method 1 standards for C9-C10 aromatic hydrocarbons used.
(2) - MassDEP Method 1 standards for 1,3-Dichloropropene used.

Table 2
Summary of Analytical Results for Groundwater Samples -- 2010
New Bedford High School
New Bedford, Massachusetts

Analysis	Analyte		Sample ID:	MW-4				MW-5					MW-5D	MW-6		MW-7					
			Sample Date:	1/6/2010	2/17/2010	4/9/2010	9/13/2010	1/6/2010	1/6/2010	2/17/2010	4/8/2010	9/10/2010	9/10/2010	1/7/2010	2/18/2010	1/7/2010	2/17/2010	2/17/2010	4/7/2010	9/9/2010	10/22/2010
		GW-2	GW-3						Field Dup									Field Dup			
VOCs																					
(ug/L)	Methylene Chloride	10,000	50,000	5.0 U	5.0 U	5.0 U	2.0 U	5.0 U	5.0 U	5.0 U	5.0 U	2.0 U	2.0 U	5.0 U	5.0 U	5.0 U	5.0 U	5.0 U	5.0 U	2.0 U	2.0 U
	1,1-Dichloroethane	1,000	20,000	1.0 U	1.0 U	1.0 U	1.0 U	1.0 U	1.0 U	1.0 U	1.0 U	1.0 U	1.0 U	1.0 U	1.0 U	1.0 U	1.0 U	1.0 U	1.0 U	1.0 U	1.0 U
	Chloroform	50	20,000	2.0 U	1.0 U	1.0 U	1.0 U	2.0 U	2.0 U	1.0 U	1.0 U	1.0 U	1.0 U	2.0 U	1.0 U	2.0 U	1.0 U	1.0 U	1.0 U	1.0 U	1.0 U
	Carbon Tetrachloride	2	5,000	1.0 U	1.0 U	1.0 U	1.0 U	1.0 U	1.0 U	1.0 U	1.0 U	1.0 U	1.0 U	1.0 U	1.0 U	1.0 U	1.0 U	1.0 U	1.0 U	1.0 U	1.0 U
	1,2-Dichloropropane	3	50,000	1.0 U	1.0 U	1.0 U	1.0 U	1.0 U	1.0 U	1.0 U	1.0 U	1.0 U	1.0 U	1.0 U	1.0 U	1.0 U	1.0 U	1.0 U	1.0 U	1.0 U	1.0 U
	Chlorodibromomethane	20	50,000	10 U	1.0 U	1.0 U	1.0 U	10 U	10 U	1.0 U	1.0 U	1.0 U	1.0 U	10 U	1.0 U	10 U	1.0 U	1.0 U	1.0 U	1.0 U	1.0 U
	1,1,2-Trichloroethane	900	50,000	1.0 U	1.0 U	1.0 U	1.0 U	1.0 U	1.0 U	1.0 U	1.0 U	1.0 U	1.0 U	1.0 U	1.0 U	1.0 U	1.0 U	1.0 U	1.0 U	1.0 U	1.0 U
	Tetrachloroethylene	50	30,000	1.0 U	1.0 U	1.0 U	1.0 U	1.0 U	1.0 U	1.0 U	1.0 U	1.0 U	1.0 U	1.0 U	1.0 U	**63**	**60**	**64**	**64**	**25**	**26**
	Chlorobenzene	200	1,000	1.0 U	1.0 U	1.0 U	1.0 U	1.0 U	1.0 U	1.0 U	1.0 U	1.0 U	1.0 U	1.0 U	1.0 U	1.0 U	1.0 U	1.0 U	1.0 U	1.0 U	1.0 U
	Trichlorofluoromethane (Freon 11)	NS	NS	2.0 U	2.0 U	2.0 U	2.0 U	2.0 U	2.0 U	2.0 U	2.0 U	2.0 U	2.0 U	2.0 U	2.0 U	2.0 U	2.0 U	2.0 U	2.0 U	2.0 U	2.0 U
	1,2-Dichloroethane	5	20,000	1.0 U	1.0 U	1.0 U	1.0 U	1.0 U	1.0 U	1.0 U	1.0 U	1.0 U	1.0 U	1.0 U	1.0 U	1.0 U	1.0 U	1.0 U	1.0 U	1.0 U	1.0 U
	1,1,1-Trichloroethane	4,000	20,000	1.0 U	1.0 U	1.0 U	1.0 U	1.0 U	1.0 U	1.0 U	1.0 U	1.0 U	1.0 U	1.0 U	1.0 U	1.0 U	1.0 U	1.0 U	1.0 U	1.0 U	1.0 U
	Bromodichloromethane	6	50,000	5.0 U	1.0 U	1.0 U	1.0 U	5.0 U	5.0 U	1.0 U	1.0 U	1.0 U	1.0 U	5.0 U	1.0 U	5.0 U	1.0 U	1.0 U	1.0 U	1.0 U	1.0 U
	trans-1,3-Dichloropropene	10[2]	200[2]	5.0 U	0.50 U	0.50 U	0.50 U	5.0 U	5.0 U	0.50 U	0.50 U	0.50 U	0.50 U	5.0 U	0.50 U	5.0 U	0.50 U	0.50 U	0.50 U	0.50 U	0.50 U
	cis-1,3-Dichloropropene	10[2]	200[2]	5.0 U	0.50 U	0.50 U	0.50 U	5.0 U	5.0 U	0.50 U	0.50 U	0.50 U	0.50 U	5.0 U	0.50 U	5.0 U	0.50 U	0.50 U	0.50 U	0.50 U	0.50 U
	1,1-Dichloropropene	NS	NS	2.0 U	2.0 U	2.0 U	2.0 U	2.0 U	2.0 U	2.0 U	2.0 U	2.0 U	2.0 U	2.0 U	2.0 U	2.0 U	2.0 U	2.0 U	2.0 U	2.0 U	2.0 U
	Bromoform	700	50,000	10 U	2.0 U	2.0 U	2.0 U	10 U	10 U	2.0 U	2.0 U	2.0 U	2.0 U	10 U	2.0 U	10 U	2.0 U	2.0 U	2.0 U	2.0 U	2.0 U
	1,1,2,2-Tetrachloroethane	9	50,000	0.50 U	1.0 U	1.0 U	1.0 U	0.50 U	0.50 U	1.0 U	1.0 U	1.0 U	1.0 U	0.50 U	1.0 U	0.50 U	1.0 U	1.0 U	1.0 U	1.0 U	1.0 U
	Benzene	2,000	10,000	1.0 U	1.0 U	1.0 U	1.0 U	1.0 U	1.0 U	1.0 U	1.0 U	1.0 U	1.0 U	1.0 U	1.0 U	1.0 U	1.0 U	1.0 U	1.0 U	1.0 U	1.0 U
	Toluene	50,000	40,000	1.0 U	1.0 U	1.0 U	1.0 U	1.0 U	1.0 U	1.0 U	1.0 U	1.0 U	1.0 U	1.0 U	1.0 U	1.0 U	1.0 U	1.0 U	1.0 U	1.0 U	1.0 U
	Ethylbenzene	20,000	5,000	1.0 U	1.0 U	1.0 U	1.0 U	1.0 U	1.0 U	1.0 U	1.0 U	1.0 U	1.0 U	1.0 U	1.0 U	1.0 U	1.0 U	1.0 U	1.0 U	1.0 U	1.0 U
	Chloromethane	NS	NS	2.0 U	2.0 U	2.0 U	2.0 U	2.0 U	2.0 U	2.0 U	2.0 U	2.0 U	2.0 U	2.0 U	2.0 U	2.0 U	2.0 U	2.0 U	2.0 U	2.0 U	2.0 U
	Bromomethane	7	800	2.0 U	5.0 U	5.0 U	2.0 U	2.0 U	2.0 U	5.0 U	5.0 U	2.0 U	2.0 U	2.0 U	5.0 U	2.0 U	5.0 U	5.0 U	5.0 U	2.0 U	2.0 U
	Vinyl Chloride	2	50,000	2.0 U	1.0 U	1.0 U	1.0 U	2.0 U	2.0 U	1.0 U	1.0 U	1.0 U	1.0 U	2.0 U	1.0 U	**3.4**	**9.2**	**9.9**	**1.6**	**1.4**	**3.7**
	Chloroethane	NS	NS	2.0 U	2.0 U	2.0 U	2.0 U	2.0 U	2.0 U	2.0 U	2.0 U	2.0 U	2.0 U	2.0 U	2.0 U	2.0 U	2.0 U	2.0 U	2.0 U	2.0 U	2.0 U
	1,1-Dichloroethylene	80	30,000	1.0 U	1.0 U	1.0 U	1.0 U	1.0 U	1.0 U	1.0 U	1.0 U	1.0 U	1.0 U	1.0 U	1.0 U	1.0 U	1.0 U	1.0 U	1.0 U	1.0 U	1.0 U
	trans-1,2-Dichloroethylene	90	50,000	1.0 U	1.0 U	1.0 U	1.0 U	1.0 U	1.0 U	1.0 U	1.0 U	1.0 U	1.0 U	1.0 U	1.0 U	1.0 U	1.0 U	1.0 U	1.0 U	1.0 U	1.0 U
	Trichloroethylene	30	5,000	1.0 U	1.0 U	1.0 U	1.0 U	1.0 U	1.0 U	1.0 U	1.0 U	1.0 U	**1.1**	1.0 U	1.0 U	**6.8**	**5.8**	**6.5**	**4.5**	**14**	1.0 U
	1,2-Dichlorobenzene	2,000	2,000	1.0 U	1.0 U	1.0 U	1.0 U	1.0 U	1.0 U	1.0 U	1.0 U	1.0 U	1.0 U	1.0 U	1.0 U	1.0 U	1.0 U	1.0 U	1.0 U	1.0 U	1.0 U
	1,3-Dichlorobenzene	2,000	50,000	1.0 U	1.0 U	1.0 U	1.0 U	1.0 U	1.0 U	1.0 U	1.0 U	1.0 U	1.0 U	1.0 U	1.0 U	1.0 U	1.0 U	1.0 U	1.0 U	1.0 U	1.0 U
	1,4-Dichlorobenzene	200	8,000	1.0 U	1.0 U	1.0 U	1.0 U	1.0 U	1.0 U	1.0 U	1.0 U	1.0 U	1.0 U	1.0 U	1.0 U	1.0 U	1.0 U	1.0 U	1.0 U	1.0 U	1.0 U
	Methyl tert-Butyl Ether (MTBE)	50,000	50,000	1.0 U	2.0 U	2.0 U	2.0 U	1.0 U	1.0 U	2.0 U	2.0 U	2.0 U	2.0 U	1.0 U	2.0 U	1.0 U	2.0 U	2.0 U	2.0 U	2.0 U	2.0 U
	m+p Xylene	9,000	5,000	2.0 U	2.0 U	2.0 U	2.0 U	2.0 U	2.0 U	2.0 U	2.0 U	2.0 U	2.0 U	2.0 U	2.0 U	2.0 U	2.0 U	2.0 U	2.0 U	2.0 U	2.0 U
	o-Xylene	9,000	5,000	1.0 U	1.0 U	1.0 U	1.0 U	1.0 U	1.0 U	1.0 U	1.0 U	1.0 U	1.0 U	1.0 U	1.0 U	1.0 U	1.0 U	1.0 U	1.0 U	1.0 U	1.0 U
	cis-1,2-Dichloroethylene	100	50,000	1.0 U	1.0 U	1.0 U	1.0 U	**3.7**	**4.1**	**5.9**	**3.2**	**7.1**	1.0 U	1.0 U	1.0 U	**20**	**30**	**30**	**9.6**	**47**	**49**
	Dibromomethane	NS	NS	1.0 U	2.0 U	2.0 U	2.0 U	1.0 U	1.0 U	2.0 U	2.0 U	2.0 U	2.0 U	1.0 U	2.0 U	1.0 U	2.0 U	2.0 U	2.0 U	2.0 U	2.0 U
	1,2,3-Trichloropropane	NS	NS	2.0 U	2.0 U	2.0 U	2.0 U	2.0 U	2.0 U	2.0 U	2.0 U	2.0 U	2.0 U	2.0 U	2.0 U	2.0 U	2.0 U	2.0 U	2.0 U	2.0 U	2.0 U
	Styrene	100	6,000	1.0 U	1.0 U	1.0 U	1.0 U	1.0 U	1.0 U	1.0 U	1.0 U	1.0 U	1.0 U	1.0 U	1.0 U	1.0 U	1.0 U	1.0 U	1.0 U	1.0 U	1.0 U
	Dichlorodifluoromethane (Freon 12)	NS	NS	2.0 U	2.0 U	2.0 U	2.0 U	2.0 U	2.0 U	2.0 U	2.0 U	2.0 U	2.0 U	2.0 U	2.0 U	2.0 U	2.0 U	2.0 U	2.0 U	2.0 U	2.0 U
	Acetone	50,000	50,000	50 U	5.0 U	5.0 U	5.0 U	50 U	50 U	5.0 U	5.0 U	5.0 U	5.0 U	50 U	5.0 U	50 U	5.0 U	5.0 U	5.0 U	5.0 U	5.0 U
	Carbon Disulfide	NS	NS	5.0 U	2.0 U	2.0 U	2.0 U	5.0 U	5.0 U	2.0 U	2.0 U	2.0 U	2.0 U	5.0 U	2.0 U	5.0 U	2.0 U	2.0 U	2.0 U	2.0 U	2.0 U
	2-Butanone (MEK)	50,000	50,000	20 U	5.0 U	5.0 U	5.0 U	20 U	20 U	5.0 U	5.0 U	5.0 U	5.0 U	20 U	5.0 U	20 U	5.0 U	5.0 U	5.0 U	5.0 U	5.0 U
	4-Methyl-2-pentanone (MIBK)	50,000	50,000	10 U	5.0 U	5.0 U	5.0 U	10 U	10 U	5.0 U	5.0 U	5.0 U	5.0 U	10 U	5.0 U	10 U	5.0 U	5.0 U	5.0 U	5.0 U	5.0 U
	2-Hexanone (MBK)	NS	NS	10 U	5.0 U	5.0 U	5.0 U	10 U	10 U	5.0 U	5.0 U	5.0 U	5.0 U	10 U	5.0 U	10 U	5.0 U	5.0 U	5.0 U	5.0 U	5.0 U
	Bromochloromethane	NS	NS	1.0 U	2.0 U	2.0 U	2.0 U	1.0 U	1.0 U	2.0 U	2.0 U	2.0 U	2.0 U	1.0 U	2.0 U	1.0 U	2.0 U	2.0 U	2.0 U	2.0 U	2.0 U
	Tetrahydrofuran	NS	NS	10 U	10 U	10 U	10 U	10 U	10 U	10 U	10 U	10 U	10 U	10 U	10 U	10 U	10 U	10 U	10 U	10 U	10 U
	2,2-Dichloropropane	NS	NS	1.0 U	2.0 U	2.0 U	2.0 U	1.0 U	1.0 U	2.0 U	2.0 U	2.0 U	2.0 U	1.0 U	2.0 U	1.0 U	2.0 U	2.0 U	2.0 U	2.0 U	2.0 U

Table 2
Summary of Analytical Results for Groundwater Samples -- 2010
New Bedford High School
New Bedford, Massachusetts

Analysis	Analyte		Sample ID:	MW-4				MW-5					MW-5D	MW-6		MW-7					
			Sample Date:	1/6/2010	2/17/2010	4/9/2010	9/13/2010	1/6/2010	1/6/2010	2/17/2010	4/8/2010	9/10/2010	9/10/2010	1/7/2010	2/18/2010	1/7/2010	2/17/2010	2/17/2010	4/7/2010	9/9/2010	10/22/2010
		GW-2	GW-3						Field Dup									Field Dup			
	1,2-Dibromoethane (EDB)	2	50,000	0.50 U	2.0 U	2.0 U	2.0 U	0.50 U	0.50 U	2.0 U	2.0 U	2.0 U	2.0 U	0.50 U	2.0 U	0.50 U	2.0 U	2.0 U	2.0 U	2.0 U	2.0 U
	1,3-Dichloropropane	NS	NS	0.50 U	2.0 U	2.0 U	2.0 U	0.50 U	0.50 U	2.0 U	2.0 U	2.0 U	2.0 U	0.50 U	2.0 U	0.50 U	2.0 U	2.0 U	2.0 U	2.0 U	2.0 U
	1,1,1,2-Tetrachloroethane	10	50,000	5.0 U	1.0 U	1.0 U	1.0 U	5.0 U	5.0 U	1.0 U	1.0 U	1.0 U	1.0 U	5.0 U	1.0 U	5.0 U	1.0 U	1.0 U	1.0 U	1.0 U	1.0 U
	Bromobenzene	NS	NS	1.0 U	2.0 U	2.0 U	2.0 U	1.0 U	1.0 U	2.0 U	2.0 U	2.0 U	2.0 U	1.0 U	2.0 U	1.0 U	2.0 U	2.0 U	2.0 U	2.0 U	2.0 U
	n-Butylbenzene	7,000(1)	50,000(1)	1.0 U	2.0 U	2.0 U	2.0 U	1.0 U	1.0 U	2.0 U	2.0 U	2.0 U	2.0 U	1.0 U	2.0 U	1.0 U	2.0 U	2.0 U	2.0 U	2.0 U	2.0 U
	sec-Butylbenzene	7,000(1)	50,000(1)	1.0 U	2.0 U	2.0 U	2.0 U	1.0 U	1.0 U	2.0 U	2.0 U	2.0 U	2.0 U	1.0 U	2.0 U	1.0 U	2.0 U	2.0 U	2.0 U	2.0 U	2.0 U
	tert-Butylbenzene	7,000(1)	50,000(1)	1.0 U	2.0 U	2.0 U	2.0 U	1.0 U	1.0 U	2.0 U	2.0 U	2.0 U	2.0 U	1.0 U	2.0 U	1.0 U	2.0 U	2.0 U	2.0 U	2.0 U	2.0 U
	2-Chlorotoluene	NS	NS	1.0 U	2.0 U	2.0 U	2.0 U	1.0 U	1.0 U	2.0 U	2.0 U	2.0 U	2.0 U	1.0 U	2.0 U	1.0 U	2.0 U	2.0 U	2.0 U	2.0 U	2.0 U
	4-Chlorotoluene	NS	NS	1.0 U	2.0 U	2.0 U	2.0 U	1.0 U	1.0 U	2.0 U	2.0 U	2.0 U	2.0 U	1.0 U	2.0 U	1.0 U	2.0 U	2.0 U	2.0 U	2.0 U	2.0 U
	1,2-Dibromo-3-chloropropane (DBCP)	NS	NS	10 U	5.0 U	5.0 U	2.0 U	10 U	10 U	5.0 U	5.0 U	2.0 U	2.0 U	10 U	5.0 U	10 U	5.0 U	5.0 U	5.0 U	2.0 U	2.0 U
	Hexachlorobutadiene	1	3,000	1.0 U	0.60 U	0.60 U	0.60 U	1.0 U	1.0 U	0.60 U	0.60 U	0.60 U	0.60 U	1.0 U	0.60 U	1.0 U	0.60 U	0.60 U	0.60 U	0.60 U	0.60 U
	Isopropylbenzene (Cumene)	7,000(1)	50,000(1)	1.0 U	2.0 U	2.0 U	2.0 U	1.0 U	1.0 U	2.0 U	2.0 U	2.0 U	2.0 U	1.0 U	2.0 U	1.0 U	2.0 U	2.0 U	2.0 U	2.0 U	2.0 U
	p-Isopropyltoluene (p-Cymene)	7,000(1)	50,000(1)	1.0 U	2.0 U	2.0 U	2.0 U	1.0 U	1.0 U	2.0 U	2.0 U	2.0 U	2.0 U	1.0 U	2.0 U	1.0 U	2.0 U	2.0 U	2.0 U	2.0 U	2.0 U
	Naphthalene	1,000	20,000	2.0 U	5.0 U	5.0 U	2.0 U	2.0 U	2.0 U	5.0 U	5.0 U	5.0 U	5.0 U	2.0 U	5.0 U	2.0 U	5.0 U	5.0 U	5.0 U	5.0 U	2.0 U
	n-Propylbenzene	7,000(1)	50,000(1)	1.0 U	2.0 U	2.0 U	2.0 U	1.0 U	1.0 U	2.0 U	2.0 U	2.0 U	2.0 U	1.0 U	2.0 U	1.0 U	2.0 U	2.0 U	2.0 U	2.0 U	2.0 U
	1,2,3-Trichlorobenzene	NS	NS	5.0 U	2.0 U	2.0 U	2.0 U	5.0 U	5.0 U	2.0 U	2.0 U	2.0 U	2.0 U	5.0 U	2.0 U	5.0 U	2.0 U	2.0 U	2.0 U	2.0 U	2.0 U
	1,2,4-Trichlorobenzene	2,000	50,000	1.0 U	2.0 U	2.0 U	2.0 U	1.0 U	1.0 U	2.0 U	2.0 U	2.0 U	2.0 U	1.0 U	2.0 U	1.0 U	2.0 U	2.0 U	2.0 U	2.0 U	2.0 U
	1,3,5-Trimethylbenzene	7,000(1)	50,000(1)	1.0 U	2.0 U	2.0 U	2.0 U	1.0 U	1.0 U	2.0 U	2.0 U	2.0 U	2.0 U	1.0 U	2.0 U	1.0 U	2.0 U	2.0 U	2.0 U	2.0 U	2.0 U
	1,2,4-Trimethylbenzene	7,000(1)	50,000(1)	1.0 U	2.0 U	2.0 U	2.0 U	1.0 U	1.0 U	2.0 U	2.0 U	2.0 U	2.0 U	1.0 U	2.0 U	1.0 U	2.0 U	2.0 U	2.0 U	2.0 U	2.0 U
	Diethyl Ether	NS	NS	2.0 U	2.0 U	2.0 U	2.0 U	2.0 U	2.0 U	2.0 U	2.0 U	2.0 U	2.0 U	2.0 U	2.0 U	2.0 U	2.0 U	2.0 U	2.0 U	2.0 U	2.0 U
	Diisopropyl Ether (DIPE)	NS	NS	0.50 U	2.0 U	2.0 U	2.0 U	0.50 U	0.50 U	2.0 U	2.0 U	2.0 U	2.0 U	0.50 U	2.0 U	0.50 U	2.0 U	2.0 U	2.0 U	2.0 U	2.0 U
	tert-Butyl Ethyl Ether (TBEE)	NS	NS	0.50 U	2.0 U	2.0 U	2.0 U	0.50 U	0.50 U	2.0 U	2.0 U	2.0 U	2.0 U	0.50 U	2.0 U	0.50 U	2.0 U	2.0 U	2.0 U	2.0 U	2.0 U
	tert-Amyl Methyl Ether (TAME)	NS	NS	0.50 U	2.0 U	2.0 U	2.0 U	0.50 U	0.50 U	2.0 U	2.0 U	2.0 U	2.0 U	0.50 U	2.0 U	0.50 U	2.0 U	2.0 U	2.0 U	2.0 U	2.0 U
	1,4-Dioxane	6,000	50,000	50 U	250 U	250 U	250 U	50 U	50 U	250 U	250 U	250 U	250 U	50 U	250 U	50 U	250 U	250 U	250 U	250 U	250 U
General Chemistry																					
(ug/L)	Nitrogen, Nitrate	NS	NS	NA	NA	NA	NA	NA	NA	NA	NA	100 U	**280**	NA	NA	NA	NA	NA	NA	100 U	NA
	Sulfate	NS	NS	NA	NA	NA	NA	NA	NA	NA	NA	10,000 U	**10,000**	NA	NA	NA	NA	NA	NA	**25,000**	NA
	Total Organic Carbon	NS	NS	NA	NA	NA	NA	NA	NA	NA	NA	**6,800**	**2,900**	NA	NA	NA	NA	NA	NA	**7,400**	NA

Notes:

ug/L - micrograms per liter.

NS - No MassDEP standards exist for this compound.

U - Compound was not detected at specified quantitation limit.

Values in Bold indicate the compound was detected.

Values shown in Bold and shaded type exceed one or more of the listed MassDEP Method 1 standards.

VOCs - Volatile Organic Compounds.

(1) - MassDEP Method 1 standards for C9-C10 aromatic hydrocarbons used.

(2) - MassDEP Method 1 standards for 1,3-Dichloropropene used.

Table 2
Summary of Analytical Results for Groundwater Samples -- 2010
New Bedford High School
New Bedford, Massachusetts

Analysis	Analyte		Sample ID:	MW-7D		MW-8A	MW-11			MW-12	MW-13	MW-14	MW-15	MW-16	MW-17	MW-18			MW-19
			Sample Date:	9/9/2010	9/9/2010	2/18/2010	2/19/2010	4/7/2010	9/13/2010	2/18/2010	2/19/2010	2/19/2010	2/18/2010	2/19/2010	2/18/2010	2/18/2010	4/9/2010	9/13/2010	2/18/2010
		GW-2	GW-3		Field Dup														
VOCs																			
(ug/L)	Methylene Chloride	10,000	50,000	2.0 U	2.0 U	5.0 U	5.0 U	5.0 U	2.0 U	5.0 U	5.0 U	5.0 U	5.0 U	5.0 U	5.0 U	5.0 U	5.0 U	2.0 U	5.0 U
	1,1-Dichloroethane	1,000	20,000	**3.9**	**2.9**	1.0 U	1.0 U	1.0 U	1.0 U	1.0 U	1.0 U	1.0 U	1.0 U	1.0 U	1.0 U	1.0 U	1.0 U	1.0 U	1.0 U
	Chloroform	50	20,000	1.0 U	1.0 U	1.0 U	1.0 U	1.0 U	1.0 U	1.0 U	1.0 U	1.0 U	1.0 U	1.0 U	1.0 U	1.0 U	1.0 U	1.0 U	1.0 U
	Carbon Tetrachloride	2	5,000	1.0 U	1.0 U	1.0 U	1.0 U	1.0 U	1.0 U	1.0 U	1.0 U	1.0 U	1.0 U	1.0 U	1.0 U	1.0 U	1.0 U	1.0 U	1.0 U
	1,2-Dichloropropane	3	50,000	1.0 U	1.0 U	1.0 U	1.0 U	1.0 U	1.0 U	1.0 U	1.0 U	1.0 U	1.0 U	1.0 U	1.0 U	1.0 U	1.0 U	1.0 U	1.0 U
	Chlorodibromomethane	20	50,000	1.0 U	1.0 U	1.0 U	1.0 U	1.0 U	1.0 U	1.0 U	1.0 U	1.0 U	1.0 U	1.0 U	1.0 U	1.0 U	1.0 U	1.0 U	1.0 U
	1,1,2-Trichloroethane	900	50,000	1.0 U	1.0 U	1.0 U	1.0 U	1.0 U	1.0 U	1.0 U	1.0 U	1.0 U	1.0 U	1.0 U	1.0 U	1.0 U	1.0 U	1.0 U	1.0 U
	Tetrachloroethylene	50	30,000	**1.3**	1.0 U	1.0 U	1.0 U	1.0 U	1.0 U	1.0 U	1.0 U	1.0 U	1.0 U	1.0 U	1.0 U	1.0 U	1.0 U	1.0 U	1.0 U
	Chlorobenzene	200	1,000	1.0 U	1.0 U	1.0 U	1.0 U	1.0 U	1.0 U	1.0 U	1.0 U	1.0 U	1.0 U	1.0 U	1.0 U	1.0 U	1.0 U	1.0 U	1.0 U
	Trichlorofluoromethane (Freon 11)	NS	NS	2.0 U	2.0 U	2.0 U	2.0 U	2.0 U	2.0 U	2.0 U	2.0 U	2.0 U	2.0 U	2.0 U	2.0 U	2.0 U	2.0 U	2.0 U	2.0 U
	1,2-Dichloroethane	5	20,000	1.0 U	1.0 U	1.0 U	1.0 U	1.0 U	1.0 U	1.0 U	1.0 U	1.0 U	1.0 U	1.0 U	1.0 U	1.0 U	1.0 U	1.0 U	1.0 U
	1,1,1-Trichloroethane	4,000	20,000	**3.9**	**2.7**	1.0 U	1.0 U	1.0 U	1.0 U	1.0 U	1.0 U	1.0 U	1.0 U	1.0 U	1.0 U	1.0 U	1.0 U	1.0 U	1.0 U
	Bromodichloromethane	6	50,000	1.0 U	1.0 U	1.0 U	1.0 U	1.0 U	1.0 U	1.0 U	1.0 U	1.0 U	1.0 U	1.0 U	1.0 U	1.0 U	1.0 U	1.0 U	1.0 U
	trans-1,3-Dichloropropene	10[2]	200[2]	0.50 U	0.50 U	0.50 U	0.50 U	0.50 U	0.50 U	0.50 U	0.50 U	0.50 U	0.50 U	0.50 U	0.50 U	0.50 U	0.50 U	0.50 U	0.50 U
	cis-1,3-Dichloropropene	10[2]	200[2]	0.50 U	0.50 U	0.50 U	0.50 U	0.50 U	0.50 U	0.50 U	0.50 U	0.50 U	0.50 U	0.50 U	0.50 U	0.50 U	0.50 U	0.50 U	0.50 U
	1,1-Dichloropropene	NS	NS	2.0 U	2.0 U	2.0 U	2.0 U	2.0 U	2.0 U	2.0 U	2.0 U	2.0 U	2.0 U	2.0 U	2.0 U	2.0 U	2.0 U	2.0 U	2.0 U
	Bromoform	700	50,000	2.0 U	2.0 U	2.0 U	2.0 U	2.0 U	2.0 U	2.0 U	2.0 U	2.0 U	2.0 U	2.0 U	2.0 U	2.0 U	2.0 U	2.0 U	2.0 U
	1,1,2,2-Tetrachloroethane	9	50,000	1.0 U	1.0 U	1.0 U	1.0 U	1.0 U	1.0 U	1.0 U	1.0 U	1.0 U	1.0 U	1.0 U	1.0 U	1.0 U	1.0 U	1.0 U	1.0 U
	Benzene	2,000	10,000	1.0 U	1.0 U	1.0 U	1.0 U	1.0 U	1.0 U	1.0 U	1.0 U	1.0 U	1.0 U	1.0 U	1.0 U	1.0 U	1.0 U	1.0 U	1.0 U
	Toluene	50,000	40,000	1.0 U	1.0 U	1.0 U	1.0 U	1.0 U	1.0 U	1.0 U	1.0 U	1.0 U	1.0 U	1.0 U	1.0 U	1.0 U	1.0 U	1.0 U	1.0 U
	Ethylbenzene	20,000	5,000	1.0 U	1.0 U	1.0 U	1.0 U	1.0 U	1.0 U	1.0 U	1.0 U	1.0 U	1.0 U	1.0 U	1.0 U	1.0 U	1.0 U	1.0 U	1.0 U
	Chloromethane	NS	NS	2.0 U	2.0 U	2.0 U	2.0 U	2.0 U	2.0 U	2.0 U	2.0 U	2.0 U	2.0 U	2.0 U	2.0 U	2.0 U	2.0 U	2.0 U	2.0 U
	Bromomethane	7	800	2.0 U	2.0 U	5.0 U	5.0 U	5.0 U	2.0 U	5.0 U	5.0 U	5.0 U	5.0 U	5.0 U	5.0 U	5.0 U	5.0 U	2.0 U	5.0 U
	Vinyl Chloride	2	50,000	1.0 U	1.0 U	1.0 U	1.0 U	1.0 U	1.0 U	1.0 U	1.0 U	1.0 U	1.0 U	1.0 U	1.0 U	1.0 U	1.0 U	1.0 U	1.0 U
	Chloroethane	NS	NS	2.0 U	2.0 U	2.0 U	2.0 U	2.0 U	2.0 U	2.0 U	2.0 U	2.0 U	2.0 U	2.0 U	2.0 U	2.0 U	2.0 U	2.0 U	2.0 U
	1,1-Dichloroethylene	80	30,000	1.0 U	1.0 U	1.0 U	1.0 U	1.0 U	1.0 U	1.0 U	1.0 U	1.0 U	1.0 U	1.0 U	1.0 U	1.0 U	1.0 U	1.0 U	1.0 U
	trans-1,2-Dichloroethylene	90	50,000	1.0 U	1.0 U	1.0 U	1.0 U	1.0 U	1.0 U	1.0 U	1.0 U	1.0 U	1.0 U	1.0 U	1.0 U	1.0 U	1.0 U	1.0 U	1.0 U
	Trichloroethylene	30	5,000	**13**	**10**	1.0 U	1.0 U	1.0 U	1.0 U	1.0 U	1.0 U	1.0 U	1.0 U	1.0 U	1.0 U	1.0 U	1.0 U	1.0 U	1.0 U
	1,2-Dichlorobenzene	2,000	2,000	1.0 U	1.0 U	1.0 U	1.0 U	1.0 U	1.0 U	1.0 U	1.0 U	1.0 U	1.0 U	1.0 U	1.0 U	1.0 U	1.0 U	1.0 U	1.0 U
	1,3-Dichlorobenzene	2,000	50,000	1.0 U	1.0 U	1.0 U	1.0 U	1.0 U	1.0 U	1.0 U	1.0 U	1.0 U	1.0 U	1.0 U	1.0 U	1.0 U	1.0 U	1.0 U	1.0 U
	1,4-Dichlorobenzene	200	8,000	1.0 U	1.0 U	1.0 U	1.0 U	1.0 U	1.0 U	1.0 U	1.0 U	1.0 U	1.0 U	1.0 U	1.0 U	1.0 U	1.0 U	1.0 U	1.0 U
	Methyl tert-Butyl Ether (MTBE)	50,000	50,000	2.0 U	2.0 U	2.0 U	2.0 U	2.0 U	2.0 U	2.0 U	2.0 U	2.0 U	2.0 U	2.0 U	2.0 U	2.0 U	2.0 U	2.0 U	2.0 U
	m+p Xylene	9,000	5,000	2.0 U	2.0 U	2.0 U	2.0 U	2.0 U	2.0 U	2.0 U	2.0 U	2.0 U	2.0 U	2.0 U	2.0 U	2.0 U	2.0 U	2.0 U	2.0 U
	o-Xylene	9,000	5,000	1.0 U	1.0 U	1.0 U	1.0 U	1.0 U	1.0 U	1.0 U	1.0 U	1.0 U	1.0 U	1.0 U	1.0 U	1.0 U	1.0 U	1.0 U	1.0 U
	cis-1,2-Dichloroethylene	100	50,000	**2.2**	**1.8**	1.0 U	1.0 U	1.0 U	1.0 U	1.0 U	1.0 U	1.0 U	1.0 U	1.0 U	1.0 U	1.0 U	1.0 U	1.0 U	1.0 U
	Dibromomethane	NS	NS	2.0 U	2.0 U	2.0 U	2.0 U	2.0 U	2.0 U	2.0 U	2.0 U	2.0 U	2.0 U	2.0 U	2.0 U	2.0 U	2.0 U	2.0 U	2.0 U
	1,2,3-Trichloropropane	NS	NS	2.0 U	2.0 U	2.0 U	2.0 U	2.0 U	2.0 U	2.0 U	2.0 U	2.0 U	2.0 U	2.0 U	2.0 U	2.0 U	2.0 U	2.0 U	2.0 U
	Styrene	100	6,000	1.0 U	1.0 U	1.0 U	1.0 U	1.0 U	1.0 U	1.0 U	1.0 U	1.0 U	1.0 U	1.0 U	1.0 U	1.0 U	1.0 U	1.0 U	1.0 U
	Dichlorodifluoromethane (Freon 12)	NS	NS	2.0 U	2.0 U	2.0 U	2.0 U	2.0 U	2.0 U	2.0 U	2.0 U	2.0 U	2.0 U	2.0 U	2.0 U	2.0 U	2.0 U	2.0 U	2.0 U
	Acetone	50,000	50,000	5.0 U	5.0 U	5.0 U	5.0 U	5.0 U	5.0 U	5.0 U	5.0 U	5.0 U	5.0 U	5.0 U	5.0 U	5.0 U	5.0 U	5.0 U	5.0 U
	Carbon Disulfide	NS	NS	2.0 U	2.0 U	2.0 U	2.0 U	2.0 U	2.0 U	2.0 U	2.0 U	2.0 U	2.0 U	2.0 U	2.0 U	2.0 U	2.0 U	2.0 U	2.0 U
	2-Butanone (MEK)	50,000	50,000	5.0 U	5.0 U	5.0 U	5.0 U	5.0 U	5.0 U	5.0 U	5.0 U	5.0 U	5.0 U	5.0 U	5.0 U	5.0 U	5.0 U	5.0 U	5.0 U
	4-Methyl-2-pentanone (MIBK)	50,000	50,000	5.0 U	5.0 U	5.0 U	5.0 U	5.0 U	5.0 U	5.0 U	5.0 U	5.0 U	5.0 U	5.0 U	5.0 U	5.0 U	5.0 U	5.0 U	5.0 U
	2-Hexanone (MBK)	NS	NS	5.0 U	5.0 U	5.0 U	5.0 U	5.0 U	5.0 U	5.0 U	5.0 U	5.0 U	5.0 U	5.0 U	5.0 U	5.0 U	5.0 U	5.0 U	5.0 U
	Bromochloromethane	NS	NS	2.0 U	2.0 U	2.0 U	2.0 U	2.0 U	2.0 U	2.0 U	2.0 U	2.0 U	2.0 U	2.0 U	2.0 U	2.0 U	2.0 U	2.0 U	2.0 U
	Tetrahydrofuran	NS	NS	10 U	10 U	10 U	10 U	10 U	10 U	10 U	10 U	10 U	10 U	10 U	10 U	10 U	10 U	10 U	10 U
	2,2-Dichloropropane	NS	NS	2.0 U	2.0 U	2.0 U	2.0 U	2.0 U	2.0 U	2.0 U	2.0 U	2.0 U	2.0 U	2.0 U	2.0 U	2.0 U	2.0 U	2.0 U	2.0 U

Table 2
Summary of Analytical Results for Groundwater Samples -- 2010
New Bedford High School
New Bedford, Massachusetts

Analysis	Analyte		Sample ID:	MW-7D		MW-8A	MW-11			MW-12	MW-13	MW-14	MW-15	MW-16	MW-17	MW-18			MW-19
			Sample Date:	9/9/2010	9/9/2010	2/18/2010	2/19/2010	4/7/2010	9/13/2010	2/18/2010	2/19/2010	2/19/2010	2/18/2010	2/19/2010	2/18/2010	2/18/2010	4/9/2010	9/13/2010	2/18/2010
		GW-2	GW-3		Field Dup														
	1,2-Dibromoethane (EDB)	2	50,000	2.0 U	2.0 U	2.0 U	2.0 U	2.0 U	2.0 U	2.0 U	2.0 U	2.0 U	2.0 U	2.0 U	2.0 U	2.0 U	2.0 U	2.0 U	2.0 U
	1,3-Dichloropropane	NS	NS	2.0 U	2.0 U	2.0 U	2.0 U	2.0 U	2.0 U	2.0 U	2.0 U	2.0 U	2.0 U	2.0 U	2.0 U	2.0 U	2.0 U	2.0 U	2.0 U
	1,1,1,2-Tetrachloroethane	10	50,000	1.0 U	1.0 U	1.0 U	1.0 U	1.0 U	1.0 U	1.0 U	1.0 U	1.0 U	1.0 U	1.0 U	1.0 U	1.0 U	1.0 U	1.0 U	1.0 U
	Bromobenzene	NS	NS	2.0 U	2.0 U	2.0 U	2.0 U	2.0 U	2.0 U	2.0 U	2.0 U	2.0 U	2.0 U	2.0 U	2.0 U	2.0 U	2.0 U	2.0 U	2.0 U
	n-Butylbenzene	7,000(1)	50,000(1)	2.0 U	2.0 U	2.0 U	2.0 U	2.0 U	2.0 U	2.0 U	2.0 U	2.0 U	2.0 U	2.0 U	2.0 U	2.0 U	2.0 U	2.0 U	2.0 U
	sec-Butylbenzene	7,000(1)	50,000(1)	2.0 U	2.0 U	2.0 U	2.0 U	2.0 U	2.0 U	2.0 U	2.0 U	2.0 U	2.0 U	2.0 U	2.0 U	2.0 U	2.0 U	2.0 U	2.0 U
	tert-Butylbenzene	7,000(1)	50,000(1)	2.0 U	2.0 U	2.0 U	2.0 U	2.0 U	2.0 U	2.0 U	2.0 U	2.0 U	2.0 U	2.0 U	2.0 U	2.0 U	2.0 U	2.0 U	2.0 U
	2-Chlorotoluene	NS	NS	2.0 U	2.0 U	2.0 U	2.0 U	2.0 U	2.0 U	2.0 U	2.0 U	2.0 U	2.0 U	2.0 U	2.0 U	2.0 U	2.0 U	2.0 U	2.0 U
	4-Chlorotoluene	NS	NS	2.0 U	2.0 U	2.0 U	2.0 U	2.0 U	2.0 U	2.0 U	2.0 U	2.0 U	2.0 U	2.0 U	2.0 U	2.0 U	2.0 U	2.0 U	2.0 U
	1,2-Dibromo-3-chloropropane (DBCP)	NS	NS	2.0 U	2.0 U	5.0 U	5.0 U	5.0 U	2.0 U	5.0 U	5.0 U	5.0 U	5.0 U	5.0 U	5.0 U	5.0 U	5.0 U	2.0 U	5.0 U
	Hexachlorobutadiene	1	3,000	0.60 U	0.60 U	0.60 U	0.60 U	0.60 U	0.60 U	0.60 U	0.60 U	0.60 U	0.60 U	0.60 U	0.60 U	0.60 U	0.60 U	0.60 U	0.60 U
	Isopropylbenzene (Cumene)	7,000(1)	50,000(1)	2.0 U	2.0 U	2.0 U	2.0 U	2.0 U	2.0 U	2.0 U	2.0 U	2.0 U	2.0 U	2.0 U	2.0 U	2.0 U	2.0 U	2.0 U	2.0 U
	p-Isopropyltoluene (p-Cymene)	7,000(1)	50,000(1)	2.0 U	2.0 U	2.0 U	2.0 U	2.0 U	2.0 U	2.0 U	2.0 U	2.0 U	2.0 U	2.0 U	2.0 U	2.0 U	2.0 U	2.0 U	2.0 U
	Naphthalene	1,000	20,000	5.0 U	5.0 U	5.0 U	5.0 U	5.0 U	2.0 U	5.0 U	5.0 U	5.0 U	5.0 U	5.0 U	5.0 U	5.0 U	5.0 U	2.0 U	5.0 U
	n-Propylbenzene	7,000(1)	50,000(1)	2.0 U	2.0 U	2.0 U	2.0 U	2.0 U	2.0 U	2.0 U	2.0 U	2.0 U	2.0 U	2.0 U	2.0 U	2.0 U	2.0 U	2.0 U	2.0 U
	1,2,3-Trichlorobenzene	NS	NS	2.0 U	2.0 U	2.0 U	2.0 U	2.0 U	2.0 U	2.0 U	2.0 U	2.0 U	2.0 U	2.0 U	2.0 U	2.0 U	2.0 U	2.0 U	2.0 U
	1,2,4-Trichlorobenzene	2,000	50,000	2.0 U	2.0 U	2.0 U	2.0 U	2.0 U	2.0 U	2.0 U	2.0 U	2.0 U	2.0 U	2.0 U	2.0 U	2.0 U	2.0 U	2.0 U	2.0 U
	1,3,5-Trimethylbenzene	7,000(1)	50,000(1)	2.0 U	2.0 U	2.0 U	2.0 U	2.0 U	2.0 U	2.0 U	2.0 U	2.0 U	2.0 U	2.0 U	2.0 U	2.0 U	2.0 U	2.0 U	2.0 U
	1,2,4-Trimethylbenzene	7,000(1)	50,000(1)	2.0 U	2.0 U	2.0 U	2.0 U	2.0 U	2.0 U	2.0 U	2.0 U	2.0 U	2.0 U	2.0 U	2.0 U	2.0 U	2.0 U	2.0 U	2.0 U
	Diethyl Ether	NS	NS	2.0 U	2.0 U	2.0 U	2.0 U	2.0 U	2.0 U	2.0 U	2.0 U	2.0 U	2.0 U	2.0 U	2.0 U	2.0 U	2.0 U	2.0 U	2.0 U
	Diisopropyl Ether (DIPE)	NS	NS	2.0 U	2.0 U	2.0 U	2.0 U	2.0 U	2.0 U	2.0 U	2.0 U	2.0 U	2.0 U	2.0 U	2.0 U	2.0 U	2.0 U	2.0 U	2.0 U
	tert-Butyl Ethyl Ether (TBEE)	NS	NS	2.0 U	2.0 U	2.0 U	2.0 U	2.0 U	2.0 U	2.0 U	2.0 U	2.0 U	2.0 U	2.0 U	2.0 U	2.0 U	2.0 U	2.0 U	2.0 U
	tert-Amyl Methyl Ether (TAME)	NS	NS	2.0 U	2.0 U	2.0 U	2.0 U	2.0 U	2.0 U	2.0 U	2.0 U	2.0 U	2.0 U	2.0 U	2.0 U	2.0 U	2.0 U	2.0 U	2.0 U
	1,4-Dioxane	6,000	50,000	250 U	250 U	250 U	250 U	250 U	250 U	250 U	250 U	250 U	250 U	250 U	250 U	250 U	250 U	250 U	250 U
General Chemistry																			
(ug/L)	Nitrogen, Nitrate	NS	NS	100 U	100 U	NA	NA	NA	NA	NA	NA	NA	NA	NA	NA	NA	NA	NA	NA
	Sulfate	NS	NS	**20,000**	**20,000**	NA	NA	NA	NA	NA	NA	NA	NA	NA	NA	NA	NA	NA	NA
	Total Organic Carbon	NS	NS	**6,100**	**6,100**	NA	NA	NA	NA	NA	NA	NA	NA	NA	NA	NA	NA	NA	NA

Notes:

ug/L - micrograms per liter.

NS - No MassDEP standards exist for this compound.

U - Compound was not detected at specified quantitation limit.

Values in Bold indicate the compound was detected.

Values shown in Bold and shaded type exceed one or more of the listed MassDEP Method 1 standards.

VOCs - Volatile Organic Compounds.

(1) - MassDEP Method 1 standards for C9-C10 aromatic hydrocarbons used.

(2) - MassDEP Method 1 standards for 1,3-Dichloropropene used.

Table 2
Summary of Analytical Results for Groundwater Samples -- 2010
New Bedford High School
New Bedford, Massachusetts

Analysis	Analyte		Sample ID:	MW-20		MW-21		MW-22			MW-23		MW-24				MW-25	MW-26
			Sample Date:	4/8/2010	9/10/2010	4/8/2010	9/13/2010	4/8/2010	4/8/2010	9/13/2010	4/8/2010	9/13/2010	4/8/2010	9/10/2010	10/21/2010	10/21/2010	9/8/2010	9/8/2010
		GW-2	GW-3						Field Dup							Field Dup		
VOCs																		
(ug/L)	Methylene Chloride	10,000	50,000	5.0 U	2.0 U	5.0 U	2.0 U	5.0 U	5.0 U	2.0 U	5.0 U	2.0 U	5.0 U	2.0 U	2.0 U	2.0 U	2.0 U	2.0 U
	1,1-Dichloroethane	1,000	20,000	1.0 U	1.0 U	1.0 U	1.0 U	1.0 U	1.0 U	1.0 U	1.0 U	1.0 U	1.0 U	1.0 U	1.0 U	1.0 U	1.0 U	1.0 U
	Chloroform	50	20,000	1.0 U	1.0 U	1.0 U	1.0 U	1.0 U	1.0 U	1.0 U	1.0 U	1.0 U	1.0 U	1.0 U	1.0 U	1.0 U	1.0 U	1.0 U
	Carbon Tetrachloride	2	5,000	1.0 U	1.0 U	1.0 U	1.0 U	1.0 U	1.0 U	1.0 U	1.0 U	1.0 U	1.0 U	1.0 U	1.0 U	1.0 U	1.0 U	1.0 U
	1,2-Dichloropropane	3	50,000	1.0 U	1.0 U	1.0 U	1.0 U	1.0 U	1.0 U	1.0 U	1.0 U	1.0 U	1.0 U	1.0 U	1.0 U	1.0 U	1.0 U	1.0 U
	Chlorodibromomethane	20	50,000	1.0 U	1.0 U	1.0 U	1.0 U	1.0 U	1.0 U	1.0 U	1.0 U	1.0 U	1.0 U	1.0 U	1.0 U	1.0 U	1.0 U	1.0 U
	1,1,2-Trichloroethane	900	50,000	1.0 U	1.0 U	1.0 U	1.0 U	1.0 U	1.0 U	1.0 U	1.0 U	1.0 U	1.0 U	1.0 U	1.0 U	1.0 U	1.0 U	1.0 U
	Tetrachloroethylene	50	30,000	1.0 U	1.0 U	1.0 U	1.0 U	1.0 U	1.0 U	1.0 U	1.0 U	1.0 U	1.0 U	1.0 U	1.0 U	1.0 U	1.0 U	1.0 U
	Chlorobenzene	200	1,000	1.0 U	1.0 U	1.0 U	1.0 U	1.0 U	1.0 U	1.0 U	1.0 U	1.0 U	1.0 U	1.0 U	1.0 U	1.0 U	1.0 U	1.0 U
	Trichlorofluoromethane (Freon 11)	NS	NS	2.0 U	2.0 U	2.0 U	2.0 U	2.0 U	2.0 U	2.0 U	2.0 U	2.0 U	2.0 U	2.0 U	2.0 U	2.0 U	2.0 U	2.0 U
	1,2-Dichloroethane	5	20,000	1.0 U	1.0 U	1.0 U	1.0 U	1.0 U	1.0 U	1.0 U	1.0 U	1.0 U	1.0 U	1.0 U	1.0 U	1.0 U	1.0 U	1.0 U
	1,1,1-Trichloroethane	4,000	20,000	1.0 U	1.0 U	1.0 U	1.0 U	1.0 U	1.0 U	1.0 U	1.0 U	1.0 U	1.0 U	1.0 U	1.0 U	1.0 U	1.0 U	1.0 U
	Bromodichloromethane	6	50,000	1.0 U	1.0 U	1.0 U	1.0 U	1.0 U	1.0 U	1.0 U	1.0 U	1.0 U	1.0 U	1.0 U	1.0 U	1.0 U	1.0 U	1.0 U
	trans-1,3-Dichloropropene	10[2]	200[2]	0.50 U	0.50 U	0.50 U	0.50 U	0.50 U	0.50 U	0.50 U	0.50 U	0.50 U	0.50 U	0.50 U	0.50 U	0.50 U	0.50 U	0.50 U
	cis-1,3-Dichloropropene	10[2]	200[2]	0.50 U	0.50 U	0.50 U	0.50 U	0.50 U	0.50 U	0.50 U	0.50 U	0.50 U	0.50 U	0.50 U	0.50 U	0.50 U	0.50 U	0.50 U
	1,1-Dichloropropene	NS	NS	2.0 U	2.0 U	2.0 U	2.0 U	2.0 U	2.0 U	2.0 U	2.0 U	2.0 U	2.0 U	2.0 U	2.0 U	2.0 U	2.0 U	2.0 U
	Bromoform	700	50,000	2.0 U	2.0 U	2.0 U	2.0 U	2.0 U	2.0 U	2.0 U	2.0 U	2.0 U	2.0 U	2.0 U	2.0 U	2.0 U	2.0 U	2.0 U
	1,1,2,2-Tetrachloroethane	9	50,000	1.0 U	1.0 U	1.0 U	1.0 U	1.0 U	1.0 U	1.0 U	1.0 U	1.0 U	1.0 U	1.0 U	1.0 U	1.0 U	1.0 U	1.0 U
	Benzene	2,000	10,000	1.0 U	1.0 U	1.0 U	1.0 U	1.0 U	1.0 U	1.0 U	1.0 U	1.0 U	1.0 U	1.0 U	1.0 U	1.0 U	1.0 U	1.0 U
	Toluene	50,000	40,000	1.0 U	1.0 U	1.0 U	1.0 U	1.0 U	1.0 U	1.0 U	1.0 U	1.0 U	1.0 U	1.0 U	1.0 U	1.0 U	1.0 U	1.0 U
	Ethylbenzene	20,000	5,000	1.0 U	1.0 U	1.0 U	1.0 U	1.0 U	1.0 U	1.0 U	1.0 U	1.0 U	1.0 U	1.0 U	1.0 U	1.0 U	1.0 U	1.0 U
	Chloromethane	NS	NS	2.0 U	2.0 U	2.0 U	2.0 U	2.0 U	2.0 U	2.0 U	2.0 U	2.0 U	2.0 U	2.0 U	2.0 U	2.0 U	2.0 U	2.0 U
	Bromomethane	7	800	5.0 U	2.0 U	5.0 U	2.0 U	5.0 U	5.0 U	2.0 U	5.0 U	2.0 U	5.0 U	2.0 U	2.0 U	2.0 U	2.0 U	2.0 U
	Vinyl Chloride	2	50,000	1.0 U	1.0 U	1.0 U	1.0 U	1.0 U	1.0 U	1.0 U	1.0 U	1.0 U	**4.8**	**1.5**	**1.2**	**1.2**	1.0 U	1.0 U
	Chloroethane	NS	NS	2.0 U	2.0 U	2.0 U	2.0 U	2.0 U	2.0 U	2.0 U	2.0 U	2.0 U	2.0 U	2.0 U	2.0 U	2.0 U	2.0 U	2.0 U
	1,1-Dichloroethylene	80	30,000	1.0 U	1.0 U	1.0 U	1.0 U	1.0 U	1.0 U	1.0 U	1.0 U	1.0 U	1.0 U	1.0 U	1.0 U	1.0 U	1.0 U	1.0 U
	trans-1,2-Dichloroethylene	90	50,000	1.0 U	1.0 U	1.0 U	1.0 U	1.0 U	1.0 U	1.0 U	1.0 U	1.0 U	1.0 U	1.0 U	1.0 U	1.0 U	1.0 U	1.0 U
	Trichloroethylene	30	5,000	**1.5**	1.0 U	1.0 U	1.0 U	1.0 U	1.0 U	1.0 U	1.0 U	1.0 U	1.0 U	1.0 U	1.0 U	1.0 U	1.0 U	1.0 U
	1,2-Dichlorobenzene	2,000	2,000	1.0 U	1.0 U	1.0 U	1.0 U	1.0 U	1.0 U	1.0 U	1.0 U	1.0 U	1.0 U	1.0 U	1.0 U	1.0 U	1.0 U	1.0 U
	1,3-Dichlorobenzene	2,000	50,000	1.0 U	1.0 U	1.0 U	1.0 U	1.0 U	1.0 U	1.0 U	1.0 U	1.0 U	1.0 U	1.0 U	1.0 U	1.0 U	1.0 U	1.0 U
	1,4-Dichlorobenzene	200	8,000	1.0 U	1.0 U	1.0 U	1.0 U	1.0 U	1.0 U	1.0 U	1.0 U	1.0 U	1.0 U	1.0 U	1.0 U	1.0 U	1.0 U	1.0 U
	Methyl tert-Butyl Ether (MTBE)	50,000	50,000	2.0 U	2.0 U	2.0 U	2.0 U	2.0 U	2.0 U	2.0 U	2.0 U	2.0 U	2.0 U	2.0 U	2.0 U	2.0 U	2.0 U	2.0 U
	m+p Xylene	9,000	5,000	2.0 U	2.0 U	2.0 U	2.0 U	2.0 U	2.0 U	2.0 U	2.0 U	2.0 U	2.0 U	2.0 U	2.0 U	2.0 U	2.0 U	2.0 U
	o-Xylene	9,000	5,000	1.0 U	1.0 U	1.0 U	1.0 U	1.0 U	1.0 U	1.0 U	1.0 U	1.0 U	1.0 U	1.0 U	1.0 U	1.0 U	1.0 U	1.0 U
	cis-1,2-Dichloroethylene	100	50,000	**1.5**	**1.8**	1.0 U	1.0 U	1.0 U	1.0 U	1.0 U	1.0 U	1.0 U	**1.8**	1.0 U	1.0 U	1.0 U	1.0 U	1.0 U
	Dibromomethane	NS	NS	2.0 U	2.0 U	2.0 U	2.0 U	2.0 U	2.0 U	2.0 U	2.0 U	2.0 U	2.0 U	2.0 U	2.0 U	2.0 U	2.0 U	2.0 U
	1,2,3-Trichloropropane	NS	NS	2.0 U	2.0 U	2.0 U	2.0 U	2.0 U	2.0 U	2.0 U	2.0 U	2.0 U	2.0 U	2.0 U	2.0 U	2.0 U	2.0 U	2.0 U
	Styrene	100	6,000	1.0 U	1.0 U	1.0 U	1.0 U	1.0 U	1.0 U	1.0 U	1.0 U	1.0 U	1.0 U	1.0 U	1.0 U	1.0 U	1.0 U	1.0 U
	Dichlorodifluoromethane (Freon 12)	NS	NS	2.0 U	2.0 U	2.0 U	2.0 U	2.0 U	2.0 U	2.0 U	2.0 U	2.0 U	2.0 U	2.0 U	2.0 U	2.0 U	2.0 U	2.0 U
	Acetone	50,000	50,000	5.0 U	5.0 U	5.0 U	5.0 U	5.0 U	5.0 U	5.0 U	5.0 U	5.0 U	5.0 U	5.0 U	5.0 U	5.0 U	5.0 U	5.0 U
	Carbon Disulfide	NS	NS	2.0 U	2.0 U	2.0 U	2.0 U	2.0 U	2.0 U	2.0 U	2.0 U	2.0 U	2.0 U	2.0 U	2.0 U	2.0 U	2.0 U	2.0 U
	2-Butanone (MEK)	50,000	50,000	5.0 U	5.0 U	5.0 U	5.0 U	5.0 U	5.0 U	5.0 U	5.0 U	5.0 U	5.0 U	5.0 U	5.0 U	5.0 U	5.0 U	5.0 U
	4-Methyl-2-pentanone (MIBK)	50,000	50,000	5.0 U	5.0 U	5.0 U	5.0 U	5.0 U	5.0 U	5.0 U	5.0 U	5.0 U	5.0 U	5.0 U	5.0 U	5.0 U	5.0 U	5.0 U
	2-Hexanone (MBK)	NS	NS	5.0 U	5.0 U	5.0 U	5.0 U	5.0 U	5.0 U	5.0 U	5.0 U	5.0 U	5.0 U	5.0 U	5.0 U	5.0 U	5.0 U	5.0 U
	Bromochloromethane	NS	NS	2.0 U	2.0 U	2.0 U	2.0 U	2.0 U	2.0 U	2.0 U	2.0 U	2.0 U	2.0 U	2.0 U	2.0 U	2.0 U	2.0 U	2.0 U
	Tetrahydrofuran	NS	NS	10 U	10 U	10 U	10 U	10 U	10 U	10 U	10 U	10 U	10 U	10 U	10 U	10 U	10 U	10 U
	2,2-Dichloropropane	NS	NS	2.0 U	2.0 U	2.0 U	2.0 U	2.0 U	2.0 U	2.0 U	2.0 U	2.0 U	2.0 U	2.0 U	2.0 U	2.0 U	2.0 U	2.0 U

Table 2
Summary of Analytical Results for Groundwater Samples -- 2010
New Bedford High School
New Bedford, Massachusetts

Analysis	Analyte		Sample ID:	MW-20		MW-21		MW-22			MW-23		MW-24				MW-25	MW-26
			Sample Date:	4/8/2010	9/10/2010	4/8/2010	9/13/2010	4/8/2010	4/8/2010 Field Dup	9/13/2010	4/8/2010	9/13/2010	4/8/2010	9/10/2010	10/21/2010	10/21/2010 Field Dup	9/8/2010	9/8/2010
		GW-2	GW-3															
	1,2-Dibromoethane (EDB)	2	50,000	2.0 U	2.0 U	2.0 U	2.0 U	2.0 U	2.0 U	2.0 U	2.0 U	2.0 U	2.0 U	2.0 U	2.0 U	2.0 U	2.0 U	2.0 U
	1,3-Dichloropropane	NS	NS	2.0 U	2.0 U	2.0 U	2.0 U	2.0 U	2.0 U	2.0 U	2.0 U	2.0 U	2.0 U	2.0 U	2.0 U	2.0 U	2.0 U	2.0 U
	1,1,1,2-Tetrachloroethane	10	50,000	1.0 U	1.0 U	1.0 U	1.0 U	1.0 U	1.0 U	1.0 U	1.0 U	1.0 U	1.0 U	1.0 U	1.0 U	1.0 U	1.0 U	1.0 U
	Bromobenzene	NS	NS	2.0 U	2.0 U	2.0 U	2.0 U	2.0 U	2.0 U	2.0 U	2.0 U	2.0 U	2.0 U	2.0 U	2.0 U	2.0 U	2.0 U	2.0 U
	n-Butylbenzene	7,000(1)	50,000(1)	2.0 U	2.0 U	2.0 U	2.0 U	2.0 U	2.0 U	2.0 U	2.0 U	2.0 U	2.0 U	2.0 U	2.0 U	2.0 U	2.0 U	2.0 U
	sec-Butylbenzene	7,000(1)	50,000(1)	2.0 U	2.0 U	2.0 U	2.0 U	2.0 U	2.0 U	2.0 U	2.0 U	2.0 U	2.0 U	2.0 U	2.0 U	2.0 U	2.0 U	2.0 U
	tert-Butylbenzene	7,000(1)	50,000(1)	2.0 U	2.0 U	2.0 U	2.0 U	2.0 U	2.0 U	2.0 U	2.0 U	2.0 U	2.0 U	2.0 U	2.0 U	2.0 U	2.0 U	2.0 U
	2-Chlorotoluene	NS	NS	2.0 U	2.0 U	2.0 U	2.0 U	2.0 U	2.0 U	2.0 U	2.0 U	2.0 U	2.0 U	2.0 U	2.0 U	2.0 U	2.0 U	2.0 U
	4-Chlorotoluene	NS	NS	2.0 U	2.0 U	2.0 U	2.0 U	2.0 U	2.0 U	2.0 U	2.0 U	2.0 U	2.0 U	2.0 U	2.0 U	2.0 U	2.0 U	2.0 U
	1,2-Dibromo-3-chloropropane (DBCP)	NS	NS	5.0 U	2.0 U	5.0 U	2.0 U	5.0 U	5.0 U	2.0 U	5.0 U	2.0 U	5.0 U	2.0 U	2.0 U	2.0 U	2.0 U	2.0 U
	Hexachlorobutadiene	1	3,000	0.60 U	0.60 U	0.60 U	0.60 U	0.60 U	0.60 U	0.60 U	0.60 U	0.60 U	0.60 U	0.60 U	0.60 U	0.60 U	0.60 U	0.60 U
	Isopropylbenzene (Cumene)	7,000(1)	50,000(1)	2.0 U	2.0 U	2.0 U	2.0 U	2.0 U	2.0 U	2.0 U	2.0 U	2.0 U	2.0 U	2.0 U	2.0 U	2.0 U	2.0 U	2.0 U
	p-Isopropyltoluene (p-Cymene)	7,000(1)	50,000(1)	2.0 U	2.0 U	2.0 U	2.0 U	**6.2**	**6.2**	2.0 U	2.0 U	2.0 U	2.0 U	2.0 U	2.0 U	2.0 U	2.0 U	2.0 U
	Naphthalene	1,000	20,000	5.0 U	5.0 U	5.0 U	2.0 U	5.0 U	5.0 U	2.0 U	5.0 U	2.0 U	5.0 U	5.0 U	2.0 U	2.0 U	5.0 U	5.0 U
	n-Propylbenzene	7,000(1)	50,000(1)	2.0 U	2.0 U	2.0 U	2.0 U	2.0 U	2.0 U	2.0 U	2.0 U	2.0 U	2.0 U	2.0 U	2.0 U	2.0 U	2.0 U	2.0 U
	1,2,3-Trichlorobenzene	NS	NS	2.0 U	2.0 U	2.0 U	2.0 U	2.0 U	2.0 U	2.0 U	2.0 U	2.0 U	2.0 U	2.0 U	2.0 U	2.0 U	2.0 U	2.0 U
	1,2,4-Trichlorobenzene	2,000	50,000	2.0 U	2.0 U	2.0 U	2.0 U	2.0 U	2.0 U	2.0 U	2.0 U	2.0 U	2.0 U	2.0 U	2.0 U	2.0 U	2.0 U	2.0 U
	1,3,5-Trimethylbenzene	7,000(1)	50,000(1)	2.0 U	2.0 U	2.0 U	2.0 U	2.0 U	2.0 U	2.0 U	2.0 U	2.0 U	2.0 U	2.0 U	2.0 U	2.0 U	2.0 U	2.0 U
	1,2,4-Trimethylbenzene	7,000(1)	50,000(1)	2.0 U	2.0 U	2.0 U	2.0 U	2.0 U	2.0 U	2.0 U	2.0 U	2.0 U	2.0 U	2.0 U	2.0 U	2.0 U	2.0 U	2.0 U
	Diethyl Ether	NS	NS	2.0 U	2.0 U	2.0 U	2.0 U	2.0 U	2.0 U	2.0 U	2.0 U	2.0 U	2.0 U	2.0 U	2.0 U	2.0 U	2.0 U	2.0 U
	Diisopropyl Ether (DIPE)	NS	NS	2.0 U	2.0 U	2.0 U	2.0 U	2.0 U	2.0 U	2.0 U	2.0 U	2.0 U	2.0 U	2.0 U	2.0 U	2.0 U	2.0 U	2.0 U
	tert-Butyl Ethyl Ether (TBEE)	NS	NS	2.0 U	2.0 U	2.0 U	2.0 U	2.0 U	2.0 U	2.0 U	2.0 U	2.0 U	2.0 U	2.0 U	2.0 U	2.0 U	2.0 U	2.0 U
	tert-Amyl Methyl Ether (TAME)	NS	NS	2.0 U	2.0 U	2.0 U	2.0 U	2.0 U	2.0 U	2.0 U	2.0 U	2.0 U	2.0 U	2.0 U	2.0 U	2.0 U	2.0 U	2.0 U
	1,4-Dioxane	6,000	50,000	250 U	250 U	250 U	250 U	250 U	250 U	250 U	250 U	250 U	250 U	250 U	250 U	250 U	250 U	250 U
General Chemistry																		
(ug/L)	Nitrogen, Nitrate	NS	NS	NA	NA	NA	NA	NA	NA	NA	NA	NA	NA	NA	NA	NA	NA	NA
	Sulfate	NS	NS	NA	NA	NA	NA	NA	NA	NA	NA	NA	NA	NA	NA	NA	NA	NA
	Total Organic Carbon	NS	NS	NA	NA	NA	NA	NA	NA	NA	NA	NA	NA	NA	NA	NA	NA	NA

Notes:

ug/L - micrograms per liter.

NS - No MassDEP standards exist for this compound.

U - Compound was not detected at specified quantitation limit.

Values in **Bold** indicate the compound was detected.

Values shown in Bold and shaded type exceed one or more of the listed MassDEP Method 1 standards.

VOCs - Volatile Organic Compounds.

(1) - MassDEP Method 1 standards for C9-C10 aromatic hydrocarbons used.

(2) - MassDEP Method 1 standards for 1,3-Dichloropropene used.

Table 2
Summary of Analytical Results for Groundwater Samples -- 2010
New Bedford High School
New Bedford, Massachusetts

Analysis	Analyte		Sample ID:	MW-27		MW-28		MW-29	MW-30	MW-31	MW-32	MW-33	MW-HH-13	MW-HRC-33
			Sample Date:	9/9/2010	10/21/2010	9/9/2010	10/21/2010	9/10/2010	10/22/2010	10/21/2010	10/21/2010	10/21/2010	2/18/2010	2/17/2010
		GW-2	GW-3											
VOCs														
(ug/L)	Methylene Chloride	10,000	50,000	800 U	200 U	2.0 U	2.0 U	2.0 U	2.0 U	2.0 U	2.0 U	2.0 U	5.0 U	5.0 U
	1,1-Dichloroethane	1,000	20,000	400 U	100 U	1.0 U	1.0 U	1.0 U	1.0 U	1.0 U	1.0 U	1.0 U	1.0 U	1.0 U
	Chloroform	50	20,000	400 U	100 U	1.0 U	1.0 U	1.0 U	1.0 U	1.0 U	1.0 U	1.0 U	1.0 U	1.0 U
	Carbon Tetrachloride	2	5,000	400 U	100 U	1.0 U	1.0 U	1.0 U	1.0 U	1.0 U	1.0 U	1.0 U	1.0 U	1.0 U
	1,2-Dichloropropane	3	50,000	400 U	100 U	1.0 U	1.0 U	1.0 U	1.0 U	1.0 U	1.0 U	1.0 U	1.0 U	1.0 U
	Chlorodibromomethane	20	50,000	400 U	100 U	1.0 U	1.0 U	1.0 U	1.0 U	1.0 U	1.0 U	1.0 U	1.0 U	1.0 U
	1,1,2-Trichloroethane	900	50,000	400 U	100 U	1.0 U	1.0 U	1.0 U	1.0 U	1.0 U	1.0 U	1.0 U	1.0 U	1.0 U
	Tetrachloroethylene	50	30,000	400 U	100 U	1.0 U	1.0 U	1.0 U	1.0 U	1.0 U	1.0 U	1.0 U	1.0 U	1.0 U
	Chlorobenzene	200	1,000	400 U	100 U	**38**	**8.5**	1.0 U	1.0 U	1.0 U	1.0 U	1.0 U	1.0 U	1.0 U
	Trichlorofluoromethane (Freon 11)	NS	NS	800 U	200 U	2.0 U	2.0 U	2.0 U	2.0 U	2.0 U	2.0 U	2.0 U	2.0 U	2.0 U
	1,2-Dichloroethane	5	20,000	400 U	100 U	1.0 U	1.0 U	1.0 U	1.0 U	1.0 U	1.0 U	1.0 U	1.0 U	1.0 U
	1,1,1-Trichloroethane	4,000	20,000	400 U	100 U	1.0 U	1.0 U	1.0 U	1.0 U	1.0 U	1.0 U	1.0 U	1.0 U	1.0 U
	Bromodichloromethane	6	50,000	400 U	100 U	1.0 U	1.0 U	1.0 U	1.0 U	1.0 U	1.0 U	1.0 U	1.0 U	1.0 U
	trans-1,3-Dichloropropene	10(2)	200(2)	200 U	50 U	0.50 U	0.50 U	0.50 U	0.50 U	0.50 U	0.50 U	0.50 U	0.50 U	0.50 U
	cis-1,3-Dichloropropene	10(2)	200(2)	200 U	50 U	0.50 U	0.50 U	0.50 U	0.50 U	0.50 U	0.50 U	0.50 U	0.50 U	0.50 U
	1,1-Dichloropropene	NS	NS	800 U	200 U	2.0 U	2.0 U	2.0 U	2.0 U	2.0 U	2.0 U	2.0 U	2.0 U	2.0 U
	Bromoform	700	50,000	800 U	200 U	2.0 U	2.0 U	2.0 U	2.0 U	2.0 U	2.0 U	2.0 U	2.0 U	2.0 U
	1,1,2,2-Tetrachloroethane	9	50,000	400 U	100 U	1.0 U	1.0 U	1.0 U	1.0 U	1.0 U	1.0 U	1.0 U	1.0 U	1.0 U
	Benzene	2,000	10,000	400 U	100 U	1.0 U	1.0 U	1.0 U	1.0 U	1.0 U	1.0 U	1.0 U	1.0 U	1.0 U
	Toluene	50,000	40,000	400 U	100 U	1.0 U	1.0 U	1.0 U	1.0 U	1.0 U	1.0 U	1.0 U	1.0 U	1.0 U
	Ethylbenzene	20,000	5,000	400 U	100 U	1.0 U	1.0 U	1.0 U	1.0 U	1.0 U	1.0 U	1.0 U	1.0 U	1.0 U
	Chloromethane	NS	NS	800 U	200 U	2.0 U	2.0 U	2.0 U	2.0 U	2.0 U	2.0 U	2.0 U	2.0 U	2.0 U
	Bromomethane	7	800	800 U	200 U	2.0 U	2.0 U	2.0 U	2.0 U	2.0 U	2.0 U	2.0 U	5.0 U	5.0 U
	Vinyl Chloride	2	50,000	**550**	100 U	**9.7**	**3.8**	1.0 U	1.0 U	1.0 U	1.0 U	1.0 U	1.0 U	1.0 U
	Chloroethane	NS	NS	800 U	200 U	2.0 U	2.0 U	2.0 U	2.0 U	2.0 U	2.0 U	2.0 U	2.0 U	2.0 U
	1,1-Dichloroethylene	80	30,000	400 U	100 U	1.0 U	1.0 U	1.0 U	1.0 U	1.0 U	1.0 U	1.0 U	1.0 U	1.0 U
	trans-1,2-Dichloroethylene	90	50,000	**700**	100 U	**9.2**	**2.9**	1.0 U	1.0 U	1.0 U	1.0 U	1.0 U	1.0 U	1.0 U
	Trichloroethylene	30	5,000	**31,000**	**4,500**	**11**	**5.0**	**1.2**	1.0 U	1.0 U	**1.1**	1.0 U	1.0 U	1.0 U
	1,2-Dichlorobenzene	2,000	2,000	400 U	100 U	**2.0**	1.0 U	1.0 U	1.0 U	1.0 U	1.0 U	1.0 U	1.0 U	1.0 U
	1,3-Dichlorobenzene	2,000	50,000	400 U	100 U	**9.9**	**2.5**	1.0 U	1.0 U	1.0 U	1.0 U	1.0 U	1.0 U	1.0 U
	1,4-Dichlorobenzene	200	8,000	400 U	100 U	**48**	**11**	1.0 U	1.0 U	1.0 U	1.0 U	1.0 U	1.0 U	1.0 U
	Methyl tert-Butyl Ether (MTBE)	50,000	50,000	800 U	200 U	2.0 U	2.0 U	2.0 U	2.0 U	2.0 U	2.0 U	2.0 U	2.0 U	2.0 U
	m+p Xylene	9,000	5,000	800 U	200 U	2.0 U	2.0 U	2.0 U	2.0 U	2.0 U	2.0 U	2.0 U	2.0 U	2.0 U
	o-Xylene	9,000	5,000	400 U	100 U	1.0 U	1.0 U	1.0 U	1.0 U	1.0 U	1.0 U	1.0 U	1.0 U	1.0 U
	cis-1,2-Dichloroethylene	100	50,000	**4,100**	**290**	**25**	**11**	1.0 U	1.0 U	1.0 U	**4.5**	1.0 U	1.0 U	1.0 U
	Dibromomethane	NS	NS	800 U	200 U	2.0 U	2.0 U	2.0 U	2.0 U	2.0 U	2.0 U	2.0 U	2.0 U	2.0 U
	1,2,3-Trichloropropane	NS	NS	800 U	200 U	2.0 U	2.0 U	2.0 U	2.0 U	2.0 U	2.0 U	2.0 U	2.0 U	2.0 U
	Styrene	100	6,000	400 U	100 U	1.0 U	1.0 U	1.0 U	1.0 U	1.0 U	1.0 U	1.0 U	1.0 U	1.0 U
	Dichlorodifluoromethane (Freon 12)	NS	NS	800 U	200 U	2.0 U	2.0 U	2.0 U	2.0 U	2.0 U	2.0 U	2.0 U	2.0 U	2.0 U
	Acetone	50,000	50,000	2,000 U	500 U	5.0 U	5.0 U	5.0 U	5.0 U	5.0 U	5.0 U	5.0 U	5.0 U	5.0 U
	Carbon Disulfide	NS	NS	800 U	200 U	2.0 U	2.0 U	2.0 U	2.0 U	2.0 U	2.0 U	2.0 U	2.0 U	2.0 U
	2-Butanone (MEK)	50,000	50,000	2,000 U	500 U	5.0 U	5.0 U	5.0 U	5.0 U	5.0 U	5.0 U	5.0 U	5.0 U	5.0 U
	4-Methyl-2-pentanone (MIBK)	50,000	50,000	2,000 U	500 U	5.0 U	5.0 U	5.0 U	5.0 U	5.0 U	5.0 U	5.0 U	5.0 U	5.0 U
	2-Hexanone (MBK)	NS	NS	2,000 U	500 U	5.0 U	5.0 U	5.0 U	5.0 U	5.0 U	5.0 U	5.0 U	5.0 U	5.0 U
	Bromochloromethane	NS	NS	800 U	200 U	2.0 U	2.0 U	2.0 U	2.0 U	2.0 U	2.0 U	2.0 U	2.0 U	2.0 U
	Tetrahydrofuran	NS	NS	4,000 U	1000 U	10 U	10 U	10 U	10 U	10 U	10 U	10 U	10 U	10 U
	2,2-Dichloropropane	NS	NS	800 U	200 U	2.0 U	2.0 U	2.0 U	2.0 U	2.0 U	2.0 U	2.0 U	2.0 U	2.0 U

Table 2
Summary of Analytical Results for Groundwater Samples -- 2010
New Bedford High School
New Bedford, Massachusetts

Analysis	Analyte	Sample ID:		MW-27		MW-28		MW-29	MW-30	MW-31	MW-32	MW-33	MW-HH-13	MW-HRC-33
			Sample Date:	9/9/2010	10/21/2010	9/9/2010	10/21/2010	9/10/2010	10/22/2010	10/21/2010	10/21/2010	10/21/2010	2/18/2010	2/17/2010
		GW-2	GW-3											
	1,2-Dibromoethane (EDB)	2	50,000	800 U	200 U	2.0 U	2.0 U	2.0 U	2.0 U	2.0 U	2.0 U	2.0 U	2.0 U	2.0 U
	1,3-Dichloropropane	NS	NS	800 U	200 U	2.0 U	2.0 U	2.0 U	2.0 U	2.0 U	2.0 U	2.0 U	2.0 U	2.0 U
	1,1,1,2-Tetrachloroethane	10	50,000	400 U	100 U	1.0 U	1.0 U	1.0 U	1.0 U	1.0 U	1.0 U	1.0 U	1.0 U	1.0 U
	Bromobenzene	NS	NS	800 U	200 U	2.0 U	2.0 U	2.0 U	2.0 U	2.0 U	2.0 U	2.0 U	2.0 U	2.0 U
	n-Butylbenzene	7,000(1)	50,000(1)	800 U	200 U	2.0 U	2.0 U	2.0 U	2.0 U	2.0 U	2.0 U	2.0 U	2.0 U	2.0 U
	sec-Butylbenzene	7,000(1)	50,000(1)	800 U	200 U	2.0 U	2.0 U	2.0 U	2.0 U	2.0 U	2.0 U	2.0 U	2.0 U	2.0 U
	tert-Butylbenzene	7,000(1)	50,000(1)	800 U	200 U	2.0 U	2.0 U	2.0 U	2.0 U	2.0 U	2.0 U	2.0 U	2.0 U	2.0 U
	2-Chlorotoluene	NS	NS	800 U	200 U	2.0 U	2.0 U	2.0 U	2.0 U	2.0 U	2.0 U	2.0 U	2.0 U	2.0 U
	4-Chlorotoluene	NS	NS	800 U	200 U	2.0 U	2.0 U	2.0 U	2.0 U	2.0 U	2.0 U	2.0 U	2.0 U	2.0 U
	1,2-Dibromo-3-chloropropane (DBCP)	NS	NS	800 U	200 U	2.0 U	2.0 U	2.0 U	2.0 U	2.0 U	2.0 U	2.0 U	5.0 U	5.0 U
	Hexachlorobutadiene	1	3,000	240 U	60 U	0.60 U	0.60 U	0.60 U	0.60 U	0.60 U	0.60 U	0.60 U	0.60 U	0.60 U
	Isopropylbenzene (Cumene)	7,000(1)	50,000(1)	800 U	200 U	2.0 U	2.0 U	2.0 U	2.0 U	2.0 U	2.0 U	2.0 U	2.0 U	2.0 U
	p-Isopropyltoluene (p-Cymene)	7,000(1)	50,000(1)	800 U	200 U	2.0 U	2.0 U	2.0 U	2.0 U	2.0 U	2.0 U	2.0 U	2.0 U	2.0 U
	Naphthalene	1,000	20,000	2,000 U	200 U	5.0 U	2.0 U	5.0 U	2.0 U	2.0 U	2.0 U	2.0 U	5.0 U	5.0 U
	n-Propylbenzene	7,000(1)	50,000(1)	800 U	200 U	2.0 U	2.0 U	2.0 U	2.0 U	2.0 U	2.0 U	2.0 U	2.0 U	2.0 U
	1,2,3-Trichlorobenzene	NS	NS	800 U	200 U	2.0 U	2.0 U	2.0 U	2.0 U	2.0 U	2.0 U	2.0 U	2.0 U	2.0 U
	1,2,4-Trichlorobenzene	2,000	50,000	800 U	200 U	2.0 U	2.0 U	2.0 U	2.0 U	2.0 U	2.0 U	2.0 U	2.0 U	2.0 U
	1,3,5-Trimethylbenzene	7,000(1)	50,000(1)	800 U	200 U	2.0 U	2.0 U	2.0 U	2.0 U	2.0 U	2.0 U	2.0 U	2.0 U	2.0 U
	1,2,4-Trimethylbenzene	7,000(1)	50,000(1)	800 U	200 U	2.0 U	2.0 U	2.0 U	2.0 U	2.0 U	2.0 U	2.0 U	2.0 U	2.0 U
	Diethyl Ether	NS	NS	800 U	200 U	2.0 U	2.0 U	2.0 U	2.0 U	2.0 U	2.0 U	2.0 U	2.0 U	2.0 U
	Diisopropyl Ether (DIPE)	NS	NS	800 U	200 U	2.0 U	2.0 U	2.0 U	2.0 U	2.0 U	2.0 U	2.0 U	2.0 U	2.0 U
	tert-Butyl Ethyl Ether (TBEE)	NS	NS	800 U	200 U	2.0 U	2.0 U	2.0 U	2.0 U	2.0 U	2.0 U	2.0 U	2.0 U	2.0 U
	tert-Amyl Methyl Ether (TAME)	NS	NS	800 U	200 U	2.0 U	2.0 U	2.0 U	2.0 U	2.0 U	2.0 U	2.0 U	2.0 U	2.0 U
	1,4-Dioxane	6,000	50,000	100,000 U	25000 U	250 U	250 U	250 U	250 U	250 U	250 U	250 U	250 U	250 U
General Chemistry														
(ug/L)	Nitrogen, Nitrate	NS	NS	**1,000**	NA	100 U	NA	**110**	NA	NA	NA	NA	NA	NA
	Sulfate	NS	NS	**21,000**	NA	**13,000**	NA	10,000 U	NA	NA	NA	NA	NA	NA
	Total Organic Carbon	NS	NS	**8,700**	NA	**5,200**	NA	**4,700**	NA	NA	NA	NA	NA	NA

Notes:

ug/L - micrograms per liter.

NS - No MassDEP standards exist for this compound.

U - Compound was not detected at specified quantitation limit.

Values in **Bold** indicate the compound was detected.

Values shown in Bold and shaded type exceed one or more of the listed MassDEP Method 1 standards.

VOCs - Volatile Organic Compounds.

(1) - MassDEP Method 1 standards for C9-C10 aromatic hydrocarbons used.

(2) - MassDEP Method 1 standards for 1,3-Dichloropropene used.

Table 3
Summary of Analytical Results for Indoor Air Samples -- 2010
New Bedford High School
New Bedford, Massachusetts

Analysis	Analyte				Sample Location:	Mechanical Room B-114			Classroom B-116	Honors Dining Room B-109	Cafeteria Storage Room	Classroom A-112-3				Classroom A-115-4
					Sample ID:	TRC-IA-1	TRC-IA-1	IA-2	TRC-IA-2	TRC-IA-3	TRC-IA-4	TRC-IA-5	TRC-IA-5	IA-1	IA-1	TRC-IA-6
					Sample Date:	1/31/2010	4/20/2010	8/24/2010	1/31/2010	1/31/2010	1/31/2010	1/31/2010	4/20/2010	8/24/2010	8/24/2010	4/20/2010
		Risk Management Criteria													Field Dup	
		HI = 0.2	HI = 1.0	ELCR = 1 x 10^{-6}	ELCR = 1 x 10^{-5}											
TO-15 (ug/m3)	Dichlorodifluoromethane	NS	NS	NS	NS	**2.00**	**2.27**	**3.11**	**2.02**	**2.08**	**2.13**	**3.36**	**2.55**	**2.52**	**2.92**	**3.09**
	Chloromethane	NS	NS	NS	NS	**1.11**	**1.04**	**1.10**	**1.03**	**0.92**	**1.16**	**1.29**	**1.29**	**1.04**	**1.09**	**1.54**
	Vinyl chloride	20	100	0.27	2.7	**0.562**	**0.853**	0.051 U	0.051 U	0.051 U	0.051 U	**0.531**	0.051 U	0.051 U	0.051 U	0.051 U
	Bromomethane	1	5	NS	NS	0.776 U	0.776 U	0.776 U	0.776 U	0.776 U	0.776 U	0.776 U	0.776 U	0.776 U	0.776 U	0.776 U
	Chloroethane	NS	NS	NS	NS	0.527 U	0.527 U	0.527 U	0.527 U	0.527 U	0.527 U	0.527 U	0.527 U	0.527 U	0.527 U	0.527 U
	Acetone	160	800	NS	NS	**3.40**	**2.58**	**7.86**	**3.57**	**29.6**	**3.68**	2.37 U	**4.83**	**7.52**	**8.21**	**6.81**
	Trichlorofluoromethane	NS	NS	NS	NS	1.12 U	**1.25**	**1.82**	1.12 U	1.12 U	1.12 U	**4.92**	**1.37**	**1.5**	**1.6**	**1.57**
	Ethyl ether	NS	NS	NS	NS	0.606 U	0.606 U	0.606 U	0.606 U	0.606 U	0.606 U	0.606 U	0.606 U	0.606 U	0.606 U	0.606 U
	1,1-Dichloroethene	40	200	NS	NS	0.792 U	0.792 U	0.792 U	0.792 U	0.792 U	0.792 U	0.792 U	0.792 U	0.792 U	0.792 U	0.792 U
	Methylene chloride	600	3,000	5	50	1.74 U	1.74 U	4.86 U	1.74 U	1.74 U	1.74 U	1.74 U	1.74 U	4.86 U	4.86 U	1.74 U
	Carbon disulfide	NS	NS	NS	NS	0.622 U	0.622 U	0.622 U	0.622 U	0.622 U	0.622 U	0.622 U	0.622 U	0.622 U	0.622 U	0.622 U
	trans-1,2-Dichloroethene	14	70	NS	NS	**2.38**	**5.62**	**0.23**	0.079 U	0.079 U	0.079 U	**1.72**	0.079 U	0.079 U	0.079 U	0.079 U
	1,1-Dichloroethane	100	500	NS	NS	0.809 U	0.809 U	0.809 U	0.809 U	0.809 U	0.809 U	0.809 U	0.809 U	0.809 U	0.809 U	0.809 U
	Methyl tert butyl ether	600	3,000	NS	NS	0.720 U	0.720 U	0.720 U	0.720 U	0.720 U	0.720 U	0.720 U	0.720 U	0.720 U	0.720 U	0.720 U
	2-Butanone	1,000	5,000	NS	NS	**1.01**	**4.57**	**3.04**	0.589 U	0.589 U	0.589 U	**1.89**	0.589 U	0.589 U	**0.628**	0.589 U
	cis-1,2-Dichloroethene	7	35	NS	NS	**4.27**	**15.2**	**0.103**	**0.087**	0.079 U	0.079 U	**3.58**	0.079 U	0.079 U	0.079 U	**0.103**
	Chloroform	130	650	0.11	1.1	0.098 U	**0.161**	**2.34**	0.098 U	0.098 U	0.098 U	**0.283**	0.098 U	**1.27**	0.976 U	0.098 U
	Tetrahydrofuran	NS	NS	NS	NS	0.589 U	0.589 U	0.589 U	0.589 U	0.589 U	0.589 U	0.589 U	0.589 U	0.589 U	0.589 U	0.589 U
	2,2-Dichloropropane	NS	NS	NS	NS	0.923 U	0.923 U	0.923 U	0.923 U	0.923 U	0.923 U	0.923 U	0.923 U	0.923 U	0.923 U	0.923 U
	1,2-Dichloroethane	11	55	0.09	0.9	0.081 U	**0.109**	0.809 U	0.081 U	0.081 U	0.081 U	0.081 U	0.081 U	0.809 U	0.809 U	0.081 U
	Diisopropyl ether	NS	NS	NS	NS	0.835 U	0.835 U	0.835 U	0.835 U	0.835 U	0.835 U	0.835 U	0.835 U	0.835 U	0.835 U	0.835 U
	tert-Butyl Ethyl Ether	NS	NS	NS	NS	0.835 U	0.835 U	0.835 U	0.835 U	0.835 U	0.835 U	0.835 U	0.835 U	0.835 U	0.835 U	0.835 U
	1,1,1-Trichloroethane	1,100	5,500	NS	NS	1.09 U	1.09 U	**1.31**	1.09 U	1.09 U	1.09 U	1.09 U	1.09 U	1.09 U	1.09 U	1.09 U
	1,1-Dichloropropene	NS	NS	NS	NS	0.907 U	0.907 U	0.907 U	0.907 U	0.907 U	0.907 U	0.907 U	0.907 U	0.907 U	0.907 U	0.907 U
	Benzene	6	30	0.3	3	**0.865**	**5.50**	**1.52**	**0.424**	**0.447**	**0.479**	**2.55**	**0.345**	0.638 U	0.638 U	**0.405**
	Carbon tetrachloride	86	430	0.16	1.6	**0.578**	**0.509**	1.26 U	**0.484**	**0.390**	**0.490**	**0.559**	**0.566**	1.26 U	1.26 U	**0.629**
	tert-Amyl Methyl Ether	NS	NS	NS	NS	0.835 U	0.835 U	0.835 U	0.835 U	0.835 U	0.835 U	0.835 U	0.835 U	0.835 U	0.835 U	0.835 U
	Dibromomethane	NS	NS	NS	NS	1.42 U	1.42 U	1.42 U	1.42 U	1.42 U	1.42 U	1.42 U	1.42 U	1.42 U	1.42 U	1.42 U
	1,2-Dichloropropane	0.8	4	0.13	1.3	0.092 U	0.092 U	0.924 U	0.092 U	0.092 U	0.092 U	0.092 U	0.092 U	0.924 U	0.924 U	0.092 U
	Bromodichloromethane	14	70	0.14	1.4	0.134 U	0.134 U	1.34 U	0.134 U	0.134 U	0.134 U	0.134 U	0.134 U	1.34 U	1.34 U	0.134 U
	1,4-Dioxane	24	120	0.59	5.9	0.360 U	0.360 U	0.720 U	0.360 U	0.360 U	0.360 U	0.360 U	0.360 U	0.720 U	0.720 U	0.360 U
	Trichloroethene	36	180	1.4	14	**2.20**	**10.9**	**0.204**	0.107 U	0.107 U	0.107 U	**1.12**	0.107 U	0.107 U	0.107 U	**0.172**
	cis-1,3-Dichloropropene	4	20	0.6	6	0.091 U	0.091 U	0.907 U	0.091 U	0.091 U	0.091 U	0.091 U	0.091 U	0.907 U	0.907 U	0.091 U
	4-Methyl-2-pentanone	600	3,000	NS	NS	0.819 U	0.819 U	**0.876**	0.819 U	0.819 U	0.819 U	**1.21**	0.819 U	0.819 U	0.819 U	0.819 U
	trans-1,3-Dichloropropene	4	20	0.6	6	0.091 U	0.091 U	0.907 U	0.091 U	0.091 U	0.091 U	0.091 U	0.091 U	0.907 U	0.907 U	0.091 U
	1,1,2-Trichloroethane	15	75	0.15	1.5	0.109 U	0.109 U	1.09 U	0.109 U	0.109 U	0.109 U	0.109 U	0.109 U	1.09 U	1.09 U	0.109 U
	Toluene	1,000	5,000	NS	NS	**1.97**	**42.0**	**9.47**	0.753 U	**4.18**	0.753 U	**13.1**	0.753 U	**0.922**	**0.979**	**0.874**
	1,3-Dichloropropane	NS	NS	NS	NS	0.923 U	0.923 U	0.923 U	0.923 U	0.923 U	0.923 U	0.923 U	0.923 U	0.923 U	0.923 U	0.923 U
	2-Hexanone	NS	NS	NS	NS	0.819 U	0.819 U	0.819 U	0.819 U	0.819 U	0.819 U	0.819 U	0.819 U	0.819 U	0.819 U	0.819 U
	Dibromochloromethane	14	70	0.1	1	0.096 U	0.096 U	1.70 U	0.096 U	0.096 U	0.096 U	0.096 U	0.096 U	1.70 U	1.70 U	0.096 U
	1,2-Dibromoethane	1.8	9	0.011	0.11	0.154 U	0.154 U	1.54 U	0.154 U	0.154 U	0.154 U	0.154 U	0.154 U	1.54 U	1.54 U	0.154 U
	Tetrachloroethene	920	4,600	0.23	2.3	0.136 U	0.136 U	0.136 U	0.136 U	0.136 U	0.136 U	0.136 U	0.136 U	0.136 U	0.136 U	0.136 U
	1,1,1,2-Tetrachloroethane	NS	NS	NS	NS	1.37 U	1.37 U	1.37 U	1.37 U	1.37 U	1.37 U	1.37 U	1.37 U	1.37 U	1.37 U	1.37 U
	Chlorobenzene	4	20	NS	NS	0.920 U	0.920 U	0.920 U	0.920 U	0.920 U	0.920 U	0.920 U	0.920 U	0.92 U	0.92 U	0.920 U

Table 3
Summary of Analytical Results for Indoor Air Samples -- 2010
New Bedford High School
New Bedford, Massachusetts

Analysis	Analyte				Sample Location:	Mechanical Room B-114			Classroom B-116	Honors Dining Room B-109	Cafeteria Storage Room	Classroom A-112-3				Classroom A-115-4
					Sample ID:	TRC-IA-1	TRC-IA-1	IA-2	TRC-IA-2	TRC-IA-3	TRC-IA-4	TRC-IA-5	TRC-IA-5	IA-1	IA-1	TRC-IA-6
					Sample Date:	1/31/2010	4/20/2010	8/24/2010	1/31/2010	1/31/2010	1/31/2010	1/31/2010	4/20/2010	8/24/2010	8/24/2010	4/20/2010
		Risk Management Criteria													Field Dup	
		HI = 0.2	HI = 1.0	ELCR = 1 x 10^{-6}	ELCR = 1 x 10^{-5}											
	Ethylbenzene	200	1,000	NS	NS	0.868 U	**5.99**	**1.43**	0.868 U	**3.06**	0.868 U	**1.80**	0.868 U	0.868 U	0.868 U	0.868 U
	p/m-Xylene	20	100	NS	NS	1.74 U	**24.4**	**6.13**	1.74 U	**9.61**	1.74 U	**7.55**	1.74 U	1.74 U	1.74 U	1.74 U
	o-Xylene	20	100	NS	NS	0.868 U	**7.49**	**1.90**	0.868 U	**2.03**	0.868 U	**2.44**	0.868 U	0.868 U	0.868 U	0.868 U
	Xylenes (total)	20	100	NS	NS	1.74 U	**31.89**	**8.03**	1.74 U	**11.64**	1.74 U	**9.99**	1.74 U	1.74 U	1.74 U	1.74 U
	Bromoform	14	70	2.2	22	2.06 U	2.06 U	2.06 U	2.06 U	2.06 U	2.06 U	2.06 U	2.06 U	2.06 U	2.06 U	2.06 U
	Styrene	200	1,000	4.1	41	0.851 U	0.851 U	0.851 U	0.851 U	0.851 U	0.851 U	0.851 U	0.851 U	0.851 U	0.851 U	0.851 U
	1,1,2,2-Tetrachloroethane	19	95	0.041	0.41	0.137 U	0.137 U	1.37 U	0.137 U	0.137 U	0.137 U	0.137 U	0.137 U	1.37 U	1.37 U	0.137 U
	1,2,3-Trichloropropane	NS	NS	NS	NS	1.20 U	1.20 U	1.20 U	1.20 U	1.20 U	1.20 U	1.20 U	1.20 U	1.20 U	1.20 U	1.20 U
	Isopropylbenzene	10[a]	50[a]	NS	NS	0.982 U	0.982 U	0.982 U	0.982 U	0.982 U	0.982 U	0.982 U	0.982 U	0.982 U	0.982 U	0.982 U
	Bromobenzene	NS	NS	NS	NS	1.28 U	1.28 U	1.28 U	1.28 U	1.28 U	1.28 U	1.28 U	1.28 U	1.28 U	1.28 U	1.28 U
	2-Chlorotoluene	NS	NS	NS	NS	1.03 U	1.03 U	1.03 U	1.03 U	1.03 U	1.03 U	1.03 U	1.03 U	1.03 U	1.03 U	1.03 U
	n-Propylbenzene	10[a]	50[a]	NS	NS	0.982 U	**1.49**	0.982 U	0.982 U	0.982 U	0.982 U	0.982 U	0.982 U	0.982 U	0.982 U	0.982 U
	4-Chlorotoluene	NS	NS	NS	NS	1.03 U	1.03 U	1.03 U	1.03 U	1.03 U	1.03 U	1.03 U	1.03 U	1.03 U	1.03 U	1.03 U
	1,3,5-Trimethybenzene	10[a]	50[a]	NS	NS	0.982 U	**2.54**	0.982 U	0.982 U	0.982 U	0.982 U	0.982 U	0.982 U	0.982 U	0.982 U	0.982 U
	tert-Butylbenzene	10[a]	50[a]	NS	NS	1.10 U	1.10 U	1.10 U	1.10 U	1.10 U	1.10 U	1.10 U	1.10 U	1.10 U	1.10 U	1.10 U
	1,2,4-Trimethylbenzene	10[a]	50[a]	NS	NS	0.982 U	**9.04**	**2.36**	0.982 U	0.982 U	0.982 U	**3.18**	0.982 U	0.982 U	0.982 U	0.982 U
	1,3-Dichlorobenzene	40	200	NS	NS	1.20 U	1.20 U	1.20 U	1.20 U	1.20 U	1.20 U	1.20 U	1.20 U	1.20 U	1.20 U	1.20 U
	1,4-Dichlorobenzene	160	800	0.35	3.5	0.120 U	0.120 U	1.20 U	0.120 U	0.120 U	0.120 U	0.120 U	0.120 U	1.20 U	1.20 U	0.120 U
	sec-Butylbenzene	10[a]	50[a]	NS	NS	1.10 U	1.10 U	1.10 U	1.10 U	1.10 U	1.10 U	1.10 U	1.10 U	1.10 U	1.10 U	1.10 U
	p-Isopropyltoluene	10[a]	50[a]	NS	NS	1.10 U	1.10 U	1.10 U	1.10 U	1.10 U	1.10 U	1.10 U	1.10 U	1.10 U	1.10 U	1.10 U
	1,2-Dichlorobenzene	40	200	NS	NS	1.20 U	1.20 U	1.20 U	1.20 U	1.20 U	1.20 U	1.20 U	1.20 U	1.20 U	1.20 U	1.20 U
	n-Butylbenzene	10[a]	50[a]	NS	NS	1.10 U	1.10 U	1.10 U	1.10 U	1.10 U	1.10 U	1.10 U	1.10 U	1.10 U	1.10 U	1.10 U
	1,2-Dibromo-3-chloropropane	NS	NS	NS	NS	1.93 U	1.93 U	1.93 U	1.93 U	1.93 U	1.93 U	1.93 U	1.93 U	1.93 U	1.93 U	1.93 U
	1,2,4-Trichlorobenzene	40	200	NS	NS	1.48 U	1.48 U	1.48 U	1.48 U	1.48 U	1.48 U	1.48 U	1.48 U	1.48 U	1.48 U	1.48 U
	Naphthalene	0.61	3.05	NS	NS	0.262 U	**0.681**	1.05 U	0.262 U	**0.665**	0.262 U	**0.325**	0.262 U	1.05 U	1.05 U	0.262 U
	1,2,3-Trichlorobenzene	NS	NS	NS	NS	1.48 U	1.48 U	1.48 U	1.48 U	1.48 U	1.48 U	1.48 U	1.48 U	1.48 U	1.48 U	1.48 U
	Hexachlorobutadiene	0.14	0.7	0.11	1.1	0.192 U	0.192 U	2.13 U	0.192 U	0.192 U	0.192 U	0.192 U	0.192 U	2.13 U	2.13 U	0.192 U

Notes:

ug/m3 - micrograms per cubic meter.

NS - No risk management criteria exist for this compound.

U - Compound was not detected at specified quantitation limit.

Values in Bold indicate the compound was detected.

Values shown in Bold and shaded type exceed one or more of the listed criteria.

TO - Toxic organics.

ELCR - Excess lifetime cancer risk.

HI - Hazard index.

Risk Management Criteria - MassDEP Indoor Air Threshold Values for the Evaluation of a Vapor Intrusion Pathway, Attachment C, updated June 26, 2008.

(a) - The risk management criteria for C9-C10 aromatics used.

Table 3
Summary of Analytical Results for Indoor Air Samples -- 2010
New Bedford High School
New Bedford, Massachusetts

Analysis	Analyte				Sample Location:	Classroom A-105-4	Classroom A-115-3	Classroom A-105-3	Classroom A-115-2	Classroom A-105-2	Classroom A-116-1	Classroom A-112-2	Classroom A-110-1	Lecture Room D-120	
					Sample ID:	TRC-IA-7	TRC-IA-8	TRC-IA-9	TRC-IA-10	TRC-IA-11	TRC-IA-12	TRC-IA-13	TRC-IA-14	TRC-IA-15	IA-3
					Sample Date:	4/20/2010	4/20/2010	4/20/2010	4/20/2010	4/20/2010	4/20/2010	4/20/2010	4/20/2010	4/20/2010	8/24/2010
		Risk Management Criteria													
		HI = 0.2	HI = 1.0	ELCR = 1 x 10^{-6}	ELCR = 1 x 10^{-5}										
TO-15															
(ug/m3)	Dichlorodifluoromethane	NS	NS	NS	NS	**2.16**	**2.31**	**1.95**	**2.21**	**2.20**	**2.85**	**2.56**	**2.23**	**2.28**	**3.06**
	Chloromethane	NS	NS	NS	NS	**1.11**	**1.09**	**1.08**	**1.19**	**1.07**	**1.33**	**1.42**	**1.01**	**1.12**	**1.23**
	Vinyl chloride	20	100	0.27	2.7	0.051 U	0.051 U	0.051 U	0.051 U	0.051 U	0.051 U	0.051 U	0.051 U	0.051 U	0.051 U
	Bromomethane	1	5	NS	NS	0.776 U	0.776 U	0.776 U	0.776 U	0.776 U	0.776 U	0.776 U	0.776 U	0.776 U	0.776 U
	Chloroethane	NS	NS	NS	NS	0.527 U	0.527 U	0.527 U	0.527 U	0.527 U	0.527 U	0.527 U	0.527 U	0.527 U	0.527 U
	Acetone	160	800	NS	NS	**5.18**	**7.56**	**5.78**	**4.64**	**7.75**	**5.30**	**5.02**	**4.62**	**8.21**	**9.90**
	Trichlorofluoromethane	NS	NS	NS	NS	1.12 U	**1.25**	1.12 U	**1.20**	**1.18**	**1.48**	**1.36**	**1.21**	**1.58**	**2.03**
	Ethyl ether	NS	NS	NS	NS	0.606 U	0.606 U	0.606 U	0.606 U	0.606 U	0.606 U	0.606 U	0.606 U	0.606 U	0.606 U
	1,1-Dichloroethene	40	200	NS	NS	0.792 U	0.792 U	0.792 U	0.792 U	0.792 U	0.792 U	0.792 U	0.792 U	0.792 U	0.792 U
	Methylene chloride	600	3,000	5	50	1.74 U	1.74 U	**2.87**	1.74 U	1.74 U	1.74 U	1.74 U	1.74 U	1.74 U	4.86 U
	Carbon disulfide	NS	NS	NS	NS	0.622 U	0.622 U	0.622 U	0.622 U	0.622 U	0.622 U	0.622 U	0.622 U	0.622 U	0.622 U
	trans-1,2-Dichloroethene	14	70	NS	NS	0.079 U	0.079 U	0.079 U	0.079 U	0.079 U	0.079 U	0.079 U	0.079 U	0.079 U	0.079 U
	1,1-Dichloroethane	100	500	NS	NS	0.809 U	0.809 U	0.809 U	0.809 U	0.809 U	0.809 U	0.809 U	0.809 U	0.809 U	0.809 U
	Methyl tert butyl ether	600	3,000	NS	NS	0.720 U	0.720 U	0.720 U	0.720 U	0.720 U	0.720 U	0.720 U	0.720 U	**4.74**	0.720 U
	2-Butanone	1,000	5,000	NS	NS	0.589 U	**0.922**	0.589 U	0.589 U	**0.746**	**0.648**	0.589 U	0.589 U	**2.44**	**1.79**
	cis-1,2-Dichloroethene	7	35	NS	NS	**0.246**	0.079 U	**0.119**	0.079 U	0.079 U	0.079 U	0.079 U	0.079 U	0.079 U	0.079 U
	Chloroform	130	650	0.11	1.1	0.098 U	0.098 U	0.098 U	0.098 U	0.098 U	0.098 U	0.098 U	0.098 U	**0.590**	0.976 U
	Tetrahydrofuran	NS	NS	NS	NS	0.589 U	0.589 U	0.589 U	0.589 U	0.589 U	0.589 U	0.589 U	0.589 U	0.589 U	0.589 U
	2,2-Dichloropropane	NS	NS	NS	NS	0.923 U	0.923 U	0.923 U	0.923 U	0.923 U	0.923 U	0.923 U	0.923 U	0.923 U	0.923 U
	1,2-Dichloroethane	11	55	0.09	0.9	0.081 U	0.081 U	0.081 U	0.081 U	0.081 U	0.081 U	0.081 U	0.081 U	0.081 U	0.809 U
	Diisopropyl ether	NS	NS	NS	NS	0.835 U	0.835 U	0.835 U	0.835 U	0.835 U	0.835 U	0.835 U	0.835 U	0.835 U	0.835 U
	tert-Butyl Ethyl Ether	NS	NS	NS	NS	0.835 U	0.835 U	0.835 U	0.835 U	0.835 U	0.835 U	0.835 U	0.835 U	0.835 U	0.835 U
	1,1,1-Trichloroethane	1,100	5,500	NS	NS	1.09 U	1.09 U	1.09 U	1.09 U	1.09 U	1.09 U	1.09 U	1.09 U	**7.14**	1.09 U
	1,1-Dichloropropene	NS	NS	NS	NS	0.907 U	0.907 U	0.907 U	0.907 U	0.907 U	0.907 U	0.907 U	0.907 U	0.907 U	0.907 U
	Benzene	6	30	0.3	3	0.319 U	0.319 U	**0.354**	0.319 U	0.319 U	**0.358**	**0.322**	0.319 U	**4.48**	0.638 U
	Carbon tetrachloride	86	430	0.16	1.6	**0.478**	**0.484**	**0.541**	**0.490**	**0.509**	**0.610**	**0.578**	**0.484**	**0.478**	1.26 U
	tert-Amyl Methyl Ether	NS	NS	NS	NS	0.835 U	0.835 U	0.835 U	0.835 U	0.835 U	0.835 U	0.835 U	0.835 U	0.835 U	0.835 U
	Dibromomethane	NS	NS	NS	NS	1.42 U	1.42 U	1.42 U	1.42 U	1.42 U	1.42 U	1.42 U	1.42 U	1.42 U	1.42 U
	1,2-Dichloropropane	0.8	4	0.13	1.3	0.092 U	0.092 U	0.092 U	0.092 U	0.092 U	0.092 U	0.092 U	0.092 U	0.092 U	0.924 U
	Bromodichloromethane	14	70	0.14	1.4	0.134 U	0.134 U	0.134 U	0.134 U	0.134 U	0.134 U	0.134 U	0.134 U	0.134 U	1.34 U
	1,4-Dioxane	24	120	0.59	5.9	0.360 U	0.360 U	0.360 U	0.360 U	0.360 U	0.360 U	0.360 U	0.360 U	0.360 U	0.720 U
	Trichloroethene	36	180	1.4	14	**0.462**	0.107 U	0.107 U	0.107 U	0.107 U	0.107 U	0.107 U	0.107 U	**0.107**	0.107 U
	cis-1,3-Dichloropropene	4	20	0.6	6	0.091 U	0.091 U	0.091 U	0.091 U	0.091 U	0.091 U	0.091 U	0.091 U	0.091 U	0.907 U
	4-Methyl-2-pentanone	600	3,000	NS	NS	0.819 U	0.819 U	0.819 U	0.819 U	0.819 U	0.819 U	0.819 U	0.819 U	0.819 U	0.819 U
	trans-1,3-Dichloropropene	4	20	0.6	6	0.091 U	0.091 U	0.091 U	0.091 U	0.091 U	0.091 U	0.091 U	0.091 U	0.091 U	0.907 U
	1,1,2-Trichloroethane	15	75	0.15	1.5	0.109 U	0.109 U	0.109 U	0.109 U	0.109 U	0.109 U	0.109 U	0.109 U	0.109 U	1.09 U
	Toluene	1,000	5,000	NS	NS	**1.41**	0.753 U	**0.915**	0.753 U	**1.31**	0.753 U	0.753 U	0.753 U	**36.9**	**3.54**
	1,3-Dichloropropane	NS	NS	NS	NS	0.923 U	0.923 U	0.923 U	0.923 U	0.923 U	0.923 U	0.923 U	0.923 U	0.923 U	0.923 U
	2-Hexanone	NS	NS	NS	NS	0.819 U	0.819 U	0.819 U	0.819 U	0.819 U	0.819 U	0.819 U	0.819 U	0.819 U	0.819 U
	Dibromochloromethane	14	70	0.1	1	0.096 U	0.096 U	0.096 U	0.096 U	0.096 U	0.096 U	0.096 U	0.096 U	0.096 U	1.70 U
	1,2-Dibromoethane	1.8	9	0.011	0.11	0.154 U	0.154 U	0.154 U	0.154 U	0.154 U	0.154 U	0.154 U	0.154 U	0.154 U	1.54 U
	Tetrachloroethene	920	4,600	0.23	2.3	0.136 U	0.136 U	**0.196**	0.136 U	0.136 U	0.136 U	0.136 U	0.136 U	**1.76**	**0.136**
	1,1,1,2-Tetrachloroethane	NS	NS	NS	NS	1.37 U	1.37 U	1.37 U	1.37 U	1.37 U	1.37 U	1.37 U	1.37 U	1.37 U	1.37 U
	Chlorobenzene	4	20	NS	NS	0.920 U	0.920 U	0.920 U	0.920 U	0.920 U	0.920 U	0.920 U	0.920 U	0.920 U	0.92 U

Table 3
Summary of Analytical Results for Indoor Air Samples -- 2010
New Bedford High School
New Bedford, Massachusetts

Analysis	Analyte	Risk Management Criteria HI = 0.2	Risk Management Criteria HI = 1.0	Risk Management Criteria ELCR = 1 x 10^{-6}	Risk Management Criteria ELCR = 1 x 10^{-5}	Classroom A-105-4	Classroom A-115-3	Classroom A-105-3	Classroom A-115-2	Classroom A-105-2	Classroom A-116-1	Classroom A-112-2	Classroom A-110-1	Lecture Room D-120	Lecture Room D-120
	Sample ID:					TRC-IA-7	TRC-IA-8	TRC-IA-9	TRC-IA-10	TRC-IA-11	TRC-IA-12	TRC-IA-13	TRC-IA-14	TRC-IA-15	IA-3
	Sample Date:					4/20/2010	4/20/2010	4/20/2010	4/20/2010	4/20/2010	4/20/2010	4/20/2010	4/20/2010	4/20/2010	8/24/2010
	Ethylbenzene	200	1,000	NS	NS	0.868 U	0.868 U	0.868 U	0.868 U	0.868 U	0.868 U	0.868 U	0.868 U	**6.00**	0.868 U
	p/m-Xylene	20	100	NS	NS	1.74 U	1.74 U	1.74 U	1.74 U	1.74 U	1.74 U	1.74 U	1.74 U	**18.8**	**2.41**
	o-Xylene	20	100	NS	NS	0.868 U	0.868 U	0.868 U	0.868 U	0.868 U	0.868 U	0.868 U	0.868 U	**6.69**	0.868 U
	Xylenes (total)	20	100	NS	NS	1.74 U	1.74 U	1.74 U	1.74 U	1.74 U	1.74 U	1.74 U	1.74 U	**25.49**	**2.41**
	Bromoform	14	70	2.2	22	2.06 U	2.06 U	2.06 U	2.06 U	2.06 U	2.06 U	2.06 U	2.06 U	2.06 U	2.06 U
	Styrene	200	1,000	4.1	41	0.851 U	0.851 U	0.851 U	0.851 U	0.851 U	0.851 U	0.851 U	0.851 U	0.851 U	0.851 U
	1,1,2,2-Tetrachloroethane	19	95	0.041	0.41	0.137 U	0.137 U	0.137 U	0.137 U	0.137 U	0.137 U	0.137 U	0.137 U	0.137 U	1.37 U
	1,2,3-Trichloropropane	NS	NS	NS	NS	1.20 U	1.20 U	1.20 U	1.20 U	1.20 U	1.20 U	1.20 U	1.20 U	1.20 U	1.20 U
	Isopropylbenzene	10[a]	50[a]	NS	NS	0.982 U	0.982 U	0.982 U	0.982 U	0.982 U	0.982 U	0.982 U	0.982 U	0.982 U	0.982 U
	Bromobenzene	NS	NS	NS	NS	1.28 U	1.28 U	1.28 U	1.28 U	1.28 U	1.28 U	1.28 U	1.28 U	1.28 U	1.28 U
	2-Chlorotoluene	NS	NS	NS	NS	1.03 U	1.03 U	1.03 U	1.03 U	1.03 U	1.03 U	1.03 U	1.03 U	1.03 U	1.03 U
	n-Propylbenzene	10[a]	50[a]	NS	NS	0.982 U	0.982 U	0.982 U	0.982 U	0.982 U	0.982 U	0.982 U	0.982 U	**1.48**	0.982 U
	4-Chlorotoluene	NS	NS	NS	NS	1.03 U	1.03 U	1.03 U	1.03 U	1.03 U	1.03 U	1.03 U	1.03 U	1.03 U	1.03 U
	1,3,5-Trimethybenzene	10[a]	50[a]	NS	NS	0.982 U	0.982 U	0.982 U	0.982 U	0.982 U	0.982 U	0.982 U	0.982 U	**2.11**	0.982 U
	tert-Butylbenzene	10[a]	50[a]	NS	NS	1.10 U	1.10 U	1.10 U	1.10 U	1.10 U	1.10 U	1.10 U	1.10 U	1.10 U	1.10 U
	1,2,4-Trimethylbenzene	10[a]	50[a]	NS	NS	0.982 U	0.982 U	0.982 U	0.982 U	0.982 U	0.982 U	0.982 U	0.982 U	**6.96**	0.982 U
	1,3-Dichlorobenzene	40	200	NS	NS	1.20 U	1.20 U	1.20 U	1.20 U	1.20 U	1.20 U	1.20 U	1.20 U	1.20 U	1.20 U
	1,4-Dichlorobenzene	160	800	0.35	3.5	0.120 U	0.120 U	0.120 U	0.120 U	0.120 U	0.120 U	0.120 U	0.120 U	0.120 U	1.20 U
	sec-Butylbenzene	10[a]	50[a]	NS	NS	1.10 U	1.10 U	1.10 U	1.10 U	1.10 U	1.10 U	1.10 U	1.10 U	1.10 U	1.10 U
	p-Isopropyltoluene	10[a]	50[a]	NS	NS	1.10 U	1.10 U	1.10 U	1.10 U	1.10 U	1.10 U	1.10 U	1.10 U	1.10 U	1.10 U
	1,2-Dichlorobenzene	40	200	NS	NS	1.20 U	1.20 U	1.20 U	1.20 U	1.20 U	1.20 U	1.20 U	1.20 U	1.20 U	1.20 U
	n-Butylbenzene	10[a]	50[a]	NS	NS	1.10 U	1.10 U	1.10 U	1.10 U	1.10 U	1.10 U	1.10 U	1.10 U	1.10 U	1.10 U
	1,2-Dibromo-3-chloropropane	NS	NS	NS	NS	1.93 U	1.93 U	1.93 U	1.93 U	1.93 U	1.93 U	1.93 U	1.93 U	1.93 U	1.93 U
	1,2,4-Trichlorobenzene	40	200	NS	NS	1.48 U	1.48 U	1.48 U	1.48 U	1.48 U	1.48 U	1.48 U	1.48 U	1.48 U	1.48 U
	Naphthalene	0.61	3.05	NS	NS	0.262 U	0.262 U	0.262 U	0.262 U	0.262 U	0.262 U	0.262 U	0.262 U	**0.644**	1.05 U
	1,2,3-Trichlorobenzene	NS	NS	NS	NS	1.48 U	1.48 U	1.48 U	1.48 U	1.48 U	1.48 U	1.48 U	1.48 U	1.48 U	1.48 U
	Hexachlorobutadiene	0.14	0.7	0.11	1.1	0.192 U	0.192 U	0.192 U	0.192 U	0.192 U	0.192 U	0.192 U	0.192 U	0.192 U	2.13 U

Notes:
ug/m3 - micrograms per cubic meter.
NS - No risk management criteria exist for this compound.
U - Compound was not detected at specified quantitation limit.
Values in Bold indicate the compound was detected.
Values shown in Bold and shaded type exceed one or more of the listed criteria.
TO - Toxic organics.
ELCR - Excess lifetime cancer risk.
HI - Hazard index.
Risk Management Criteria - MassDEP Indoor Air Threshold Values for the Evaluation of a Vapor Intrusion Pathway, Attachment C, updated June 26, 2008.
(a) - The risk management criteria for C9-C10 aromatics used.

Table 4
Summary of Analytical Results for Soil Gas Samples -- 2010
New Bedford High School
New Bedford, Massachusetts

Analysis	Analyte	Sample Location:	PVP-1		PVP-2		PVP-3		PVP-4		PVP-5			PVP-6		PVP-7		PVP-8		TVP-2	TVP-5	TVP-7	TVP-8
		Location Room:	Classroom	A-115-4	Classroom	A-115-3	Classroom	A-112-3	Classroom	A-115-2	Classroom A-105-1			Mechanical Room B-114		Wood Shop	D-105	Auto Shop	D-116	Classroom A-105-4	Classroom A-105-3	Classroom A-105-2	Classroom A-115-1
		Sample ID:	TVP-1	PVP-1	TVP-3	PVP-2	TVP-4	PVP-3	TVP-6	PVP-4	TVP-9		PVP-5	PVP-6		TVP-10	PVP-7	TVP-11	PVP-8	TVP-2	TVP-5	TVP-7	TVP-8
		Sample Date:	2/15/2010	4/20/2010	2/15/2010	4/20/2010	2/15/2010	4/20/2010	2/15/2010	4/20/2010	2/15/2010	2/15/2010 Field Dup	4/20/2010	4/9/2010	4/20/2010	2/15/2010	4/20/2010	2/15/2010	4/20/2010	2/15/2010	2/15/2010	2/15/2010	2/15/2010
		Screening Values*																					
TO-15 (ug/m3)	1,1,1-Trichloroethane	30	10.9 U	1.09 U	2.72 U	1.09 U	1.09 U	1.09 U	1.09 U	1.09 U	1.09 U	1.09 U	1.09 U	128 U	61.6 U	12.7	2.15	10.9 U	2.18 U	1.09 U	1.09 U	1.09 U	1.09 U
	1,1,2,2-Tetrachloroethane	0.41	13.7 U	1.37 U	3.43 U	1.37 U	1.37 U	1.37 U	1.37 U	1.37 U	1.37 U	1.37 U	1.37 U	162 U	77.4 U	1.37 U	1.37 U	13.7 U	2.74 U	1.37 U	1.37 U	1.37 U	1.37 U
	1,1,2-Trichloroethane	1.5	10.9 U	1.09 U	2.72 U	1.09 U	1.09 U	1.09 U	1.09 U	1.09 U	1.09 U	1.09 U	1.09 U	128 U	61.6 U	1.09 U	1.09 U	10.9 U	2.18 U	1.09 U	1.09 U	1.09 U	1.09 U
	1,1-Dichloroethane	8	8.09 U	0.809 U	2.02 U	0.809 U	0.809 U	0.809 U	0.809 U	0.809 U	0.809 U	0.809 U	0.809 U	95.4 U	45.6 U	0.809 U	0.809 U	8.09 U	1.62 U	0.809 U	0.809 U	0.809 U	0.809 U
	1,1-Dichloroethene	8	7.92 U	0.792 U	1.98 U	0.792 U	0.792 U	0.792 U	0.792 U	0.792 U	0.792 U	0.792 U	0.792 U	163	313	2.20	0.792 U	7.92 U	1.58 U	0.792 U	0.792 U	0.792 U	0.792 U
	1,2,4-Trichlorobenzene	34	14.8 U	1.48 U	3.71 U	1.48 U	1.48 U	1.48 U	1.48 U	1.48 U	1.48 U	1.48 U	1.48 U	175 U	83.7 U	1.48 U	1.48 U	14.8 U	2.97 U	1.48 U	1.48 U	1.48 U	1.48 U
	1,2,4-Trimethylbenzene	100[2]	9.82 U	0.982 U	2.46 U	0.982 U	0.982 U	0.982 U	0.982 U	1.92	7.24	1.86	0.982 U	116 U	55.4 U	16.1	0.982 U	9.82 U	1.96 U	1.78	0.982 U	0.982 U	0.982 U
	1,2-Dibromoethane	0.11	15.4 U	1.54 U	3.84 U	1.54 U	1.54 U	1.54 U	1.54 U	1.54 U	1.54 U	1.54 U	1.54 U	181 U	86.7 U	1.54 U	1.54 U	15.4 U	3.07 U	1.54 U	1.54 U	1.54 U	1.54 U
	1,2-Dichlorobenzene	7.2	12.0 U	1.20 U	3.00 U	1.20 U	1.20 U	1.20 U	1.20 U	1.20 U	1.20 U	1.20 U	1.20 U	142 U	67.8 U	1.20 U	1.20 U	12.0 U	2.40 U	1.20 U	1.20 U	1.20 U	1.20 U
	1,2-Dichloroethane	0.9	8.09 U	0.809 U	2.02 U	0.809 U	0.809 U	0.809 U	0.809 U	0.809 U	0.809 U	0.809 U	0.809 U	95.4 U	45.6 U	0.809 U	0.809 U	8.09 U	1.62 U	0.809 U	0.809 U	0.809 U	0.809 U
	1,2-Dichloropropane	1.3	9.24 U	0.924 U	2.31 U	0.924 U	0.924 U	0.924 U	0.924 U	0.924 U	0.924 U	0.924 U	0.924 U	109 U	52.1 U	0.924 U	0.924 U	9.24 U	1.85 U	0.924 U	0.924 U	0.924 U	0.924 U
	1,3,5-Trimethylbenzene	100[2]	9.82 U	0.982 U	2.46 U	0.982 U	0.982 U	0.982 U	0.982 U	0.982 U	1.39	0.982 U	0.982 U	116 U	55.4 U	3.19	0.982 U	9.82 U	1.96 U	0.982 U	0.982 U	0.982 U	0.982 U
	1,3-Dichlorobenzene	6	12.0 U	1.20 U	3.00 U	1.20 U	1.20 U	1.20 U	1.20 U	1.20 U	1.20 U	1.20 U	1.20 U	142 U	67.8 U	1.20 U	1.20 U	12.0 U	2.40 U	1.20 U	1.20 U	1.20 U	1.20 U
	1,4-Dichlorobenzene	5	12.0 U	1.20 U	3.00 U	1.20 U	1.20 U	1.20 U	1.20 U	1.20 U	1.20 U	1.20 U	1.20 U	142 U	67.8 U	1.20 U	1.20 U	12.0 U	2.40 U	1.20 U	1.20 U	1.20 U	1.20 U
	1,4-Dioxane	5.9	7.20 U	0.720 U	1.80 U	0.720 U	0.720 U	0.720 U	0.720 U	0.720 U	0.720 U	0.720 U	0.720 U	84.9 U	40.6 U	0.720 U	0.720 U	7.20 U	1.44 U	0.720 U	0.720 U	0.720 U	0.720 U
	2-Butanone	120	17.3	0.589 U	36.3	3.04	5.42	5.45	3.88	21.1	2.57	3.42	6.75	69.5 U	33.3 U	19.1	1.64	5.89 U	6.32	4.06	2.93	5.08	5.68
	2-Hexanone	NS	8.19 U	0.819 U	2.05 U	0.819 U	0.819 U	0.819 U	0.819 U	1.41	0.819 U	0.819 U	0.819 U	96.5 U	46.2 U	0.819 U	0.819 U	8.19 U	1.64 U	0.819 U	0.819 U	0.819 U	0.819 U
	Acetone	910	1,100	4.10	665	24.5	137	29.8	52.9	158	24.1	33.5	71.3	280 U	134 U	325	13.3	4,730	62.8	94.8	31.0	46.7	167
	Benzene	23	84.7	0.638 U	33.6	0.638 U	3.93	0.638 U	0.964	6.36	1.74	1.95	3.71	75.3 U	36.0 U	4.38	3.62	6.38 U	10.4	1.36	1.54	1.42	1.60
	Bromodichloromethane	1.4	13.4 U	1.34 U	3.35 U	1.34 U	1.34 U	1.34 U	1.34 U	1.34 U	1.34 U	1.34 U	1.34 U	158 U	75.6 U	1.34 U	1.34 U	13.4 U	2.68 U	1.34 U	1.34 U	1.34 U	1.34 U
	Bromoform	22	20.6 U	2.06 U	5.16 U	2.06 U	2.06 U	2.06 U	2.06 U	2.06 U	2.06 U	2.06 U	2.06 U	244 U	117 U	2.06 U	2.06 U	20.6 U	4.13 U	2.06 U	2.06 U	2.06 U	2.06 U
	Bromomethane	6	7.76 U	0.776 U	1.94 U	0.776 U	0.776 U	0.776 U	0.776 U	0.776 U	0.776 U	0.776 U	0.776 U	91.5 U	43.8 U	0.776 U	0.776 U	7.76 U	1.55 U	0.776 U	0.776 U	0.776 U	0.776 U
	Carbon disulfide	NS	6.22 U	0.622 U	3.04	1.09	0.622 U	0.622 U	0.622 U	0.622 U	0.622 U	0.622 U	0.622 U	73.4 U	35.1 U	0.622 U	0.622 U	6.22 U	1.24 U	0.622 U	0.622 U	0.622 U	0.622 U
	Carbon tetrachloride	5.4	12.6 U	1.26 U	3.14 U	1.26 U	1.26 U	1.26 U	1.26 U	1.26 U	1.26 U	1.26 U	1.26 U	148 U	71.0 U	1.26 U	1.26 U	12.6 U	2.51 U	1.26 U	1.26 U	1.26 U	1.26 U
	Chlorobenzene	23	9.20 U	0.920 U	2.30 U	0.920 U	0.920 U	0.920 U	0.920 U	0.920 U	0.920 U	0.920 U	0.920 U	108 U	51.9 U	0.920 U	0.920 U	9.20 U	1.84 U	0.920 U	0.920 U	0.920 U	0.920 U
	Chloroethane	NS	5.27 U	0.527 U	1.83	0.527 U	0.527 U	0.527 U	0.527 U	0.527 U	0.527 U	0.527 U	0.527 U	62.2 U	29.8 U	0.678	0.527 U	5.27 U	1.05 U	0.527 U	0.527 U	0.527 U	0.527 U
	Chloroform	19	9.76 U	0.976 U	2.44 U	0.976 U	0.976 U	0.976 U	2.28	0.976 U	0.976 U	0.976 U	0.976 U	115 U	55.1 U	0.976 U	0.976 U	9.76 U	1.95 U	0.976 U	0.976 U	0.976 U	0.976 U
	Chloromethane	NS	4.13 U	0.413 U	3.06	0.413 U	0.442	0.413 U	0.413 U	1.04	0.413 U	0.413 U	1.26	48.6 U	23.3 U	0.792	0.512	4.13 U	3.18	0.413 U	0.413 U	0.413 U	0.454
	cis-1,2-Dichloroethene	8	7.92 U	0.792 U	1.98 U	0.792 U	0.792 U	0.792 U	0.792 U	0.792 U	0.792 U	0.792 U	0.792 U	1,270	2,750	0.792 U	0.792 U	7.92 U	1.58 U	0.792 U	0.792 U	0.792 U	0.792 U
	cis-1,3-Dichloropropene	6	9.07 U	0.907 U	2.27 U	0.907 U	0.907 U	0.907 U	0.907 U	0.907 U	0.907 U	0.907 U	0.907 U	107 U	51.2 U	0.907 U	0.907 U	9.07 U	1.81 U	0.907 U	0.907 U	0.907 U	0.907 U
	Dibromochloromethane	1	17.0 U	1.70 U	4.26 U	1.70 U	1.70 U	1.70 U	1.70 U	1.70 U	1.70 U	1.70 U	1.70 U	201 U	96.1 U	1.70 U	1.70 U	17.0 U	3.40 U	1.70 U	1.70 U	1.70 U	1.70 U
	Dichlorodifluoromethane	NS	9.88 U	3.29	2.47 U	2.78	2.44	2.61	2.26	2.02	2.26	2.65	3.34	116 U	55.8 U	2.35	2.59	9.88 U	2.83	2.15	2.21	2.32	2.45
	Ethylbenzene	74	8.68 U	0.868 U	4.09	0.868 U	0.868 U	0.868 U	0.868 U	1.46	1.38	1.67	0.868 U	102 U	49.0 U	6.21	0.868 U	8.68 U	1.74 U	0.868 U	0.868 U	0.868 U	0.868 U
	Hexachlorobutadiene	1.1	21.3 U	2.13 U	5.33 U	2.13 U	2.13 U	2.13 U	2.13 U	2.13 U	2.13 U	2.13 U	2.13 U	251 U	120 U	2.13 U	2.13 U	21.3 U	4.26 U	2.13 U	2.13 U	2.13 U	2.13 U
	Methylene chloride	50	17.4 U	1.74 U	4.34 U	1.74 U	1.74 U	1.74 U	1.74 U	1.74 U	1.74 U	1.74 U	1.74 U	205 U	98.0 U	1.74 U	1.74 U	17.4 U	3.47 U	1.74 U	1.74 U	1.74 U	1.74 U
	4-Methyl-2-pentanone	22	8.19 U	0.819 U	9.43	0.819 U	5.19	0.819 U	1.44	2.96	0.819 U	0.819 U	0.819 U	96.5 U	46.2 U	24.2	0.819 U	8.19 U	1.64 U	1.31	0.819 U	2.04	2.83
	Methyl tert butyl ether	390	7.20 U	0.720 U	1.80 U	0.720 U	0.720 U	0.720 U	0.720 U	0.720 U	0.720 U	0.720 U	0.720 U	84.9 U	40.7 U	0.720 U	0.720 U	7.20 U	1.44 U	0.720 U	0.720 U	0.720 U	0.720 U
	p/m-Xylene	200	17.4 U	1.74 U	7.83	1.74 U	2.03	1.74 U	1.74 U	4.67	5.22	5.55	2.63	205 U	98.0 U	39.8	1.74 U	23.7	3.47 U	1.91	1.74 U	1.74 U	1.74 U
	o-Xylene	200	8.68 U	0.868 U	2.17 U	0.868 U	0.868 U	0.868 U	0.868 U	1.72	2.54	2.35	0.985	102 U	49.0 U	12.8	0.868 U	13.5	1.74 U	0.868 U	0.868 U	0.868 U	0.868 U
	Styrene	14	8.51 U	0.851 U	3.33	0.851 U	0.851 U	0.851 U	0.851 U	0.851 U	0.851 U	0.851 U	0.851 U	100 U	48.0 U	0.851 U	0.851 U	8.51 U	1.70 U	0.851 U	0.851 U	0.851 U	0.851 U
	Tetrachloroethene	14	13.6 U	6.73	3.39 U	2.22	1.36 U	1.77	10.3	1.36 U	5.17	4.69	8.70	1,930	76.5 U	2.20	4.70	39.2	61.9	1.79	1.48	2.90	2.18
	Tetrahydrofuran	NS	5.89 U	0.589 U	1.47 U	0.589 U	0.589 U	0.589 U	0.589 U	0.589 U	0.589 U	0.589 U	0.919	69.5 U	33.3 U	30.7	0.589 U	5.89 U	1.18 U	0.589 U	0.589 U	0.589 U	0.589 U
	Toluene	540	21.6	0.753 U	21.3	0.753 U	2.97	0.753 U	0.764	4.95	3.12	3.92	2.49	88.8 U	42.5 U	17.6	0.764	7.53 U	1.51 U	2.57	1.19	0.761	3.67
	trans-1,2-Dichloroethene	8	7.92 U	0.792 U	1.98 U	0.792 U	0.792 U	0.792 U	0.792 U	0.792 U	0.792 U	0.792 U	0.792 U	33,400	39,400	0.792 U	0.792 U	7.92 U	1.58 U	0.792 U	0.792 U	0.792 U	0.792 U
	trans-1,3-Dichloropropene	6	9.07 U	0.907 U	2.27 U	0.907 U	0.907 U	0.907 U	0.907 U	0.907 U	0.907 U	0.907 U	0.907 U	107 U	51.2 U	0.907 U	0.907 U	9.07 U	1.81 U	0.907 U	0.907 U	0.907 U	0.907 U
	Trichloroethene	8	22.6	2.06	15.0	1.07 U	1.07 U	1.07 U	1.07 U	7.61	1.07 U	1.07 U	1.35	3,120	3,600	1.07 U	1.07 U	10.7 U	2.15 U	1.07 U	1.07 U	1.07 U	1.07 U
	Trichlorofluoromethane	NS	11.2 U	1.84	2.81 U	1.53	1.21	1.46	1.12 U	1.23	1.12 U	1.18	1.64	132 U	63.4 U	1.21	1.41	11.2 U	2.24 U	1.17	1.12 U	1.12 U	1.26
	Vinyl chloride	2.7	5.11 U	0.511 U	1.28 U	0.511 U	0.511 U	0.511 U	0.511 U	0.511 U	0.511 U	0.511 U	0.511 U	1,680	1,500	0.511 U	0.511 U	5.11 U	1.02 U	0.511 U	0.511 U	0.511 U	0.511 U
	Naphthalene	6.1	10.5 U	1.05 U	3.31	1.05 U	1.05 U	1.05 U	1.05 U	1.05 U	3.84	1.05 U	1.05 U	124 U	59.1 U	3.22	1.05 U	10.5 U	2.10 U	1.05 U	1.05 U	1.05 U	1.05 U
	1,1,1,2-Tetrachloroethane	NS	13.7 U	1.37 U	3.43 U	1.37 U	1.37 U	1.37 U	1.37 U	1.37 U	1.37 U	1.37 U	1.37 U	162 U	77.4 U	1.37 U	1.37 U	13.7 U	2.74 U	1.37 U	1.37 U	1.37 U	1.37 U
	Isopropylbenzene	100[2]	198	0.982 U	36.0	0.982 U	7.45	0.982 U	0.982 U	0.982 U	0.982 U	0.982 U	0.982 U	116 U	55.4 U	0.982 U	0.982 U	9.82 U	1.96 U	0.982 U	0.982 U	0.982 U	39.3
	1,2,3-Trichloropropane	NS	12.0 U	1.20 U	3.01 U	1.20 U	1.20 U	1.20 U	1.20 U	1.20 U	1.20 U	1.20 U	1.20 U	142 U	68.0 U	1.20 U	1.20 U	12.0 U	2.41 U	1.20 U	1.20 U	1.20 U	1.20 U
	Bromobenzene	NS	12.8 U	1.28 U	3.21 U	1.28 U	1.28 U	1.28 U	1.28 U	1.28 U	1.28 U	1.28 U	1.28 U	151 U	72.4 U	1.28 U	1.28 U	12.8 U	2.57 U	1.28 U	1.28 U	1.28 U	1.28 U
	Dibromomethane	NS	14.2 U	1.42 U	3.55 U	1.42 U	1.42 U	1.42 U	1.42 U	1.42 U	1.42 U	1.42 U	1.42 U	168 U	80.2 U	1.42 U	1.42 U	14.2 U	2.84 U	1.42 U	1.42 U	1.42 U	1.42 U
	tert-Amyl Methyl Ether	NS	8.35 U	0.835 U	2.09 U	0.835 U	0.835 U	0.835 U	0.835 U	0.835 U	0.835 U	0.835 U	0.835 U	98.4 U	47.1 U	0.835 U	0.835 U	8.35 U	1.67 U	0.835 U	0.835 U	0.835 U	0.835 U
	2-Chlorotoluene	NS	10.3 U	1.03 U	2.59 U	1.03 U	1.03 U	1.03 U	1.03 U	1.03 U	1.03 U	1.03 U	1.03 U	122 U	58.4 U	1.03 U	1.03 U	10.3 U	2.07 U	1.03 U	1.03 U	1.03 U	1.03 U

Table 4
Summary of Analytical Results for Soil Gas Samples -- 2010
New Bedford High School
New Bedford, Massachusetts

Analysis	Analyte	Sample Location:	PVP-1		PVP-2		PVP-3		PVP-4		PVP-5			PVP-6		PVP-7		PVP-8		TVP-2	TVP-5	TVP-7	TVP-8
		Location Room:	Classroom	A-115-4	Classroom	A-115-3	Classroom	A-112-3	Classroom	A-115-2	Classroom A-105-1			Mechanical Room B-114		Wood Shop	D-105	Auto Shop	D-116	Classroom A-105-4	Classroom A-105-3	Classroom A-105-2	Classroom A-115-1
		Sample ID:	TVP-1	PVP-1	TVP-3	PVP-2	TVP-4	PVP-3	TVP-6	PVP-4	TVP-9		PVP-5	PVP-6		TVP-10	PVP-7	TVP-11	PVP-8	TVP-2	TVP-5	TVP-7	TVP-8
		Sample Date:	2/15/2010	4/20/2010	2/15/2010	4/20/2010	2/15/2010	4/20/2010	2/15/2010	4/20/2010	2/15/2010	2/15/2010 Field Dup	4/20/2010	4/9/2010	4/20/2010	2/15/2010	4/20/2010	2/15/2010	4/20/2010	2/15/2010	2/15/2010	2/15/2010	2/15/2010
		Screening Values*																					
	4-Chlorotoluene	NS	10.3 U	1.03 U	2.59 U	1.03 U	1.03 U	1.03 U	1.03 U	1.03 U	1.03 U	1.03 U	1.03 U	122 U	58.4 U	1.03 U	1.03 U	10.3 U	2.07 U	1.03 U	1.03 U	1.03 U	1.03 U
	2,2-Dichloropropane	NS	9.23 U	0.923 U	2.31 U	0.923 U	0.923 U	0.923 U	0.923 U	0.923 U	0.923 U	0.923 U	0.923 U	109 U	52.1 U	0.923 U	0.923 U	9.23 U	1.85 U	0.923 U	0.923 U	0.923 U	0.923 U
	1,1-Dichloropropene	NS	9.07 U	0.907 U	2.27 U	0.907 U	0.907 U	0.907 U	0.907 U	0.907 U	0.907 U	0.907 U	0.907 U	107 U	51.2 U	0.907 U	0.907 U	9.07 U	1.81 U	0.907 U	0.907 U	0.907 U	0.907 U
	Diisopropyl ether	NS	8.35 U	0.835 U	2.09 U	0.835 U	0.835 U	0.835 U	0.835 U	0.835 U	0.835 U	0.835 U	0.835 U	98.4 U	47.1 U	0.835 U	0.835 U	8.35 U	1.67 U	0.835 U	0.835 U	0.835 U	0.835 U
	tert-Butyl Ethyl Ether	NS	8.35 U	0.835 U	2.09 U	0.835 U	0.835 U	0.835 U	0.835 U	0.835 U	0.835 U	0.835 U	0.835 U	98.5 U	47.2 U	0.835 U	0.835 U	8.35 U	1.67 U	0.835 U	0.835 U	0.835 U	0.835 U
	1,2,3-Trichlorobenzene	NS	14.8 U	1.48 U	3.71 U	1.48 U	1.48 U	1.48 U	1.48 U	1.48 U	1.48 U	1.48 U	1.48 U	175 U	83.7 U	1.48 U	1.48 U	14.8 U	2.97 U	1.48 U	1.48 U	1.48 U	1.48 U
	Ethyl ether	NS	6.06 U	0.606 U	1.51 U	0.606 U	0.606 U	0.606 U	0.606 U	0.606 U	0.606 U	0.606 U	0.606 U	71.4 U	34.2 U	0.606 U	0.606 U	6.06 U	1.21 U	0.606 U	0.606 U	0.606 U	0.606 U
	n-Butylbenzene	100(1)	11.0 U	1.10 U	2.74 U	1.10 U	1.10 U	1.10 U	1.10 U	1.10 U	1.10 U	1.10 U	1.10 U	129 U	61.9 U	**1.71**	1.10 U	11.0 U	2.19 U	1.10 U	1.10 U	1.10 U	1.10 U
	sec-Butylbenzene	100(1)	11.0 U	1.10 U	2.74 U	1.10 U	1.10 U	1.10 U	1.10 U	1.10 U	1.10 U	1.10 U	1.10 U	129 U	61.9 U	1.10 U	1.10 U	11.0 U	2.19 U	1.10 U	1.10 U	1.10 U	1.10 U
	tert-Butylbenzene	100(1)	11.0 U	1.10 U	2.74 U	1.10 U	1.10 U	1.10 U	1.10 U	1.10 U	1.10 U	1.10 U	1.10 U	129 U	61.9 U	**1.91**	1.10 U	11.0 U	2.19 U	1.10 U	1.10 U	1.10 U	**3.66**
	1,2-Dibromo-3-chloropropane	NS	19.3 U	1.93 U	4.83 U	1.93 U	1.93 U	1.93 U	1.93 U	1.93 U	1.93 U	1.93 U	1.93 U	228 U	109 U	1.93 U	1.93 U	19.3 U	3.86 U	1.93 U	1.93 U	1.93 U	1.93 U
	p-Isopropyltoluene	100(1)	11.0 U	1.10 U	2.74 U	1.10 U	1.10 U	1.10 U	1.10 U	1.10 U	1.10 U	1.10 U	1.10 U	129 U	61.9 U	1.10 U	1.10 U	11.0 U	2.19 U	1.10 U	1.10 U	1.10 U	1.10 U
	n-Propylbenzene	100(1)	9.82 U	0.982 U	2.46 U	0.982 U	0.982 U	0.982 U	0.982 U	0.982 U	0.982 U	0.982 U	0.982 U	116 U	55.4 U	**1.85**	0.982 U	9.82 U	1.96 U	0.982 U	0.982 U	0.982 U	0.982 U
	1,3-Dichloropropane	NS	9.23 U	0.923 U	2.31 U	0.923 U	0.923 U	0.923 U	0.923 U	0.923 U	0.923 U	0.923 U	0.923 U	109 U	52.1 U	0.923 U	0.923 U	9.23 U	1.85 U	0.923 U	0.923 U	0.923 U	0.923 U

Notes:

ug/m3 - micrograms per cubic meters.

NS - No MassDEP standards exist for this compound.

U - Compound was not detected at specified quantitation limit.

Values in Bold indicate the compound was detected.

Values shown in Bold and shaded type exceed the screening value.

TO - Toxic organics.

(1) - IATV for C9-C10 aromatics used.

* - Soil Gas Screening Values are based on the MassDEP, Draft Indoor Air Threshold Values (IATV), June 26, 2008 and multiplied by 10, which represents a conservative soil gas to indoor air dilution attenuation factor

Table 5
Summary of Analytical Results for Soil Samples -- 2010
New Bedford High School
New Bedford, Massachusetts

Analysis	Analyte					Sample ID:	MW-7D			MW-27	MW-28
						Sample Depth (ft.):	8-10	10-12	13-15	6-8	8-10
						Sample Date:	8/24/2010	8/24/2010	8/24/2010	8/30/2010	8/30/2010
		S-1/GW-2	S-1/GW-3	S-2/GW-2	S-2/GW-3	RC S-1*					
VOCs											
(mg/kg)	Acetone	50	400	50	400	6	NA	NA	NA	0.072 U	0.10 U
	tert-Amyl Methyl Ether (TAME)	NS	NS	NS	NS	NS	NA	NA	NA	0.00072 U	0.0010 U
	Benzene	30	30	200	200	2	NA	NA	NA	0.0014 U	0.0020 U
	Bromobenzene	NS	NS	NS	NS	100	NA	NA	NA	0.0014 U	0.0020 U
	Bromochloromethane	NS	NS	NS	NS	NS	NA	NA	NA	0.0014 U	0.0020 U
	Bromodichloromethane	0.1	20	0.1	100	0.1	NA	NA	NA	0.0014 U	0.0020 U
	Bromoform	1	200	1	800	0.1	NA	NA	NA	0.0014 U	0.0020 U
	Bromomethane	0.5	30	0.5	30	0.5	NA	NA	NA	0.0072 U	0.010 U
	2-Butanone (MEK)	50	400	50	400	4	NA	NA	NA	0.029 U	0.041 U
	n-Butylbenzene	100[1]	100[1]	500[1]	500[1]	100[1]	NA	NA	NA	0.0014 U	0.0020 U
	sec-Butylbenzene	100[1]	100[1]	500[1]	500[1]	100[1]	NA	NA	NA	0.0014 U	0.0020 U
	tert-Butylbenzene	100[1]	100[1]	500[1]	500[1]	100[1]	NA	NA	NA	0.0014 U	0.0020 U
	tert-Butyl Ethyl Ether (TBEE)	NS	NS	NS	NS	NS	NA	NA	NA	0.00072 U	0.0010 U
	Carbon Disulfide	NS	NS	NS	NS	100	NA	NA	NA	0.0043 U	0.0061 U
	Carbon Tetrachloride	5	10	5	60	5	NA	NA	NA	0.0014 U	0.0020 U
	Chlorobenzene	3	100	3	100	1	NA	NA	NA	0.0014 U	0.0020 U
	Chlorodibromomethane	0.03	20	0.03	100	0.005	NA	NA	NA	0.00072 U	0.0010 U
	Chloroethane	NS	NS	NS	NS	100	NA	NA	NA	0.0072 U	0.010 U
	Chloroform	0.3	400	0.3	800	0.3	NA	NA	NA	0.0029 U	0.0041 U
	Chloromethane	NS	NS	NS	NS	100	NA	NA	NA	0.0072 U	0.010 U
	2-Chlorotoluene	NS	NS	NS	NS	100	NA	NA	NA	0.0014 U	0.0020 U
	4-Chlorotoluene	NS	NS	NS	NS	100	NA	NA	NA	0.0014 U	0.0020 U
	1,2-Dibromo-3-chloropropane (DBCP)	NS	NS	NS	NS	10	NA	NA	NA	0.0029 U	0.0041 U
	1,2-Dibromoethane (EDB)	0.1	0.7	0.1	4	0.1	NA	NA	NA	0.00072 U	0.0010 U
	Dibromomethane	NS	NS	NS	NS	500	NA	NA	NA	0.0014 U	0.0020 U
	1,2-Dichlorobenzene	30	300	30	300	9	NA	NA	NA	0.0014 U	0.0020 U
	1,3-Dichlorobenzene	40	100	40	500	1	NA	NA	NA	0.0014 U	0.0020 U
	1,4-Dichlorobenzene	4	50	4	300	0.7	NA	NA	NA	0.0014 U	**0.0086**
	Dichlorodifluoromethane (Freon 12)	NS	NS	NS	NS	1,000	NA	NA	NA	0.0072 U	0.010 U
	1,1-Dichloroethane	5	500	5	1,000	0.4	NA	NA	NA	0.0014 U	0.0020 U
	1,2-Dichloroethane	0.1	10	0.1	90	0.1	NA	NA	NA	0.0014 U	0.0020 U
	1,1-Dichloroethylene	40	500	40	1,000	3	NA	NA	NA	0.0029 U	0.0041 U
	cis-1,2-Dichloroethylene	0.4	100	0.4	500	0.3	NA	NA	NA	**7.2**	**0.022**
	trans-1,2-Dichloroethylene	1	500	1	1,000	1	NA	NA	NA	**0.057**	**0.0025**
	1,2-Dichloropropane	0.1	10	0.1	100	0.1	NA	NA	NA	0.0014 U	0.0020 U
	1,3-Dichloropropane	NS	NS	NS	NS	500	NA	NA	NA	0.00072 U	0.0010 U
	2,2-Dichloropropane	NS	NS	NS	NS	0.1[3]	NA	NA	NA	0.0014 U	0.0020 U
	1,1-Dichloropropene	NS	NS	NS	NS	0.01[3]	NA	NA	NA	0.0014 U	0.0020 U
	cis-1,3-Dichloropropene	0.4[4]	9[4]	0.4[4]	70[4]	0.01[4]	NA	NA	NA	0.00072 U	0.0010 U
	trans-1,3-Dichloropropene	0.4[4]	9[4]	0.4[4]	70[4]	0.01[4]	NA	NA	NA	0.00072 U	0.0010 U
	Diethyl Ether	NS	NS	NS	NS	100	NA	NA	NA	0.0072 U	0.010 U
	Diisopropyl Ether (DIPE)	NS	NS	NS	NS	100	NA	NA	NA	0.00072 U	0.0010 U

Table 5
Summary of Analytical Results for Soil Samples -- 2010
New Bedford High School
New Bedford, Massachusetts

Analysis	Analyte					Sample ID:	MW-7D			MW-27	MW-28
						Sample Depth (ft.):	8-10	10-12	13-15	6-8	8-10
						Sample Date:	8/24/2010	8/24/2010	8/24/2010	8/30/2010	8/30/2010
		S-1/GW-2	S-1/GW-3	S-2/GW-2	S-2/GW-3	RC S-1*					
	1,4-Dioxane	6	70	6	500	0.2	NA	NA	NA	0.072 U	0.10 U
	Ethylbenzene	500	500	1000	1000	40	NA	NA	NA	**0.0015**	0.0020 U
	Hexachlorobutadiene	6	6	90	90	6	NA	NA	NA	0.0014 U	0.0020 U
	2-Hexanone (MBK)	NS	NS	NS	NS	100	NA	NA	NA	0.014 U	0.020 U
	Isopropylbenzene (Cumene)	100(1)	100(1)	500(1)	500(1)	1,000	NA	NA	NA	0.0014 U	0.0020 U
	p-Isopropyltoluene (p-Cymene)	100(1)	100(1)	500(1)	500(1)	100(1)	NA	NA	NA	0.0014 U	0.0020 U
	Methyl tert-Butyl Ether (MTBE)	100	100	100	500	0.1	NA	NA	NA	0.0029 U	0.0041 U
	Methylene Chloride	20	200	20	900	0.1	NA	NA	NA	0.0072 U	0.010 U
	4-Methyl-2-pentanone (MIBK)	50	400	50	400	0.4	NA	NA	NA	0.014 U	0.020 U
	Naphthalene	40	500	40	1000	4	NA	NA	NA	0.0029 U	0.0041 U
	n-Propylbenzene	100(1)	100(1)	500(1)	500(1)	100	NA	NA	NA	0.0014 U	0.0020 U
	Styrene	4	30	4	200	3	NA	NA	NA	0.0014 U	**0.0064**
	1,1,1,2-Tetrachloroethane	0.1	7	0.1	100	0.1	NA	NA	NA	0.0014 U	0.0020 U
	1,1,2,2-Tetrachloroethane	0.02	0.8	0.02	10	0.005	NA	NA	NA	0.00072 U	0.0010 U
	Tetrachloroethylene	10	30	10	200	1	NA	NA	NA	0.0014 U	0.0020 U
	Tetrahydrofuran	NS	NS	NS	NS	500	NA	NA	NA	0.0072 U	0.010 U
	Toluene	500	500	1,000	1,000	30	NA	NA	NA	0.0014 U	0.0020 U
	1,2,3-Trichlorobenzene	NS	NS	NS	NS	NS	NA	NA	NA	0.0029 U	**0.0075**
	1,2,4-Trichlorobenzene	70	500	70	900	2	NA	NA	NA	**0.0017**	**0.034**
	1,1,1-Trichloroethane	500	500	600	1,000	30	NA	NA	NA	0.0014 U	0.0020 U
	1,1,2-Trichloroethane	2	4	2	60	0.1	NA	NA	NA	0.0014 U	0.0020 U
	Trichloroethylene	2	90	2	700	0.3	NA	NA	NA	**110**	**2.4**
	Trichlorofluoromethane (Freon 11)	NS	NS	NS	NS	1,000	NA	NA	NA	0.0072 U	0.010 U
	1,2,3-Trichloropropane	NS	NS	NS	NS	100	NA	NA	NA	0.0014 U	0.0020 U
	1,2,4-Trimethylbenzene	100(1)	100(1)	500(1)	500(1)	1,000	NA	NA	NA	0.0014 U	0.0020 U
	1,3,5-Trimethylbenzene	100(1)	100(1)	500(1)	500(1)	10	NA	NA	NA	0.0014 U	0.0020 U
	Vinyl Chloride	0.6	0.6	0.7	4	0.6	NA	NA	NA	0.0072 U	0.010 U
	m+p Xylene	300	500	300	1000	300	NA	NA	NA	0.0029 U	0.0041 U
	o-Xylene	300	500	300	1000	300	NA	NA	NA	0.0014 U	0.0020 U
Total Organic Carbons											
(%)	Total Organic Carbon	N/A	N/A	N/A	N/A	N/A	**4.4**	**23.9**	**0.352**	NA	**0.101**

Notes:

mg/kg - milligrams per kilogram (dry weight) or parts per million (ppm).

NA - Sample not analyzed for the listed analyte.

N/A - Not applicable.

NS - No MassDEP standards exist for this analyte.

U - Compound was not detected at specified quantitation limit.

Values in **Bold** indicate the compound was detected.

Values shown in Bold and shaded type exceed one or more of the listed MassDEP Method 1 standards.

VOCs - Volatile Organic Compounds.

RC - Reportable concentration.

* - For reference purposes only.

Table 6
Summary of Analytical Results for Fingerprint Sample
New Bedford High School
New Bedford, Massachusetts

Analysis	Analyte	Sample ID: Sample Depth (ft.): Sample Date:	MW-27 Product 8/30/2010	
VOCs				
(mg/kg)	Acetone		1,100	U
	tert-Amyl Methyl Ether (TAME)		45	U
	Benzene		22	U
	Bromobenzene		22	U
	Bromochloromethane		22	U
	Bromodichloromethane		45	U
	Bromoform		220	U
	Bromomethane		45	U
	2-Butanone (MEK)		450	U
	n-Butylbenzene		22	U
	sec-Butylbenzene		22	U
	tert-Butylbenzene		22	U
	tert-Butyl Ethyl Ether (TBEE)		45	U
	Carbon Disulfide		220	U
	Carbon Tetrachloride		220	U
	Chlorobenzene		22	U
	Chlorodibromomethane		90	U
	Chloroethane		450	U
	Chloroform		45	U
	Chloromethane		45	U
	2-Chlorotoluene		22	U
	4-Chlorotoluene		22	U
	1,2-Dibromo-3-chloropropane (DBCP)		220	U
	1,2-Dibromoethane (EDB)		90	U
	Dibromomethane		22	U
	1,2-Dichlorobenzene		**22**	
	1,3-Dichlorobenzene		22	U
	1,4-Dichlorobenzene		**29**	
	Dichlorodifluoromethane (Freon 12)		45	U
	1,1-Dichloroethane		22	U
	1,2-Dichloroethane		22	U
	1,1-Dichloroethylene		22	U
	cis-1,2-Dichloroethylene		**990**	
	trans-1,2-Dichloroethylene		**87**	
	1,2-Dichloropropane		22	U
	1,3-Dichloropropane		11	U
	2,2-Dichloropropane		220	U
	1,1-Dichloropropene		45	U
	cis-1,3-Dichloropropene		45	U
	trans-1,3-Dichloropropene		45	U
	Diethyl Ether		45	U
	Diisopropyl Ether (DIPE)		11	U

Table 6
Summary of Analytical Results for Fingerprint Sample
New Bedford High School
New Bedford, Massachusetts

Analysis	Analyte	Sample ID: Sample Depth (ft.): Sample Date:	MW-27 Product 8/30/2010	
	1,4-Dioxane		2,200	U
	Ethylbenzene		**47**	
	Hexachlorobutadiene		22	U
	2-Hexanone (MBK)		900	U
	Isopropylbenzene (Cumene)		22	U
	p-Isopropyltoluene (p-Cymene)		22	U
	Methyl tert-Butyl Ether (MTBE)		90	U
	Methylene Chloride		110	U
	4-Methyl-2-pentanone (MIBK)		450	U
	Naphthalene		220	U
	n-Propylbenzene		22	U
	Styrene		**480**	
	1,1,1,2-Tetrachloroethane		90	U
	1,1,2,2-Tetrachloroethane		45	U
	Tetrachloroethylene		22	U
	Tetrahydrofuran		220	U
	Toluene		22	U
	1,2,3-Trichlorobenzene		**230**	
	1,2,4-Trichlorobenzene		**1,000**	
	1,1,1-Trichloroethane		45	U
	1,1,2-Trichloroethane		22	U
	Trichloroethylene		**220,000**	
	Trichlorofluoromethane (Freon 11)		45	U
	1,2,3-Trichloropropane		45	U
	1,2,4-Trimethylbenzene		22	U
	1,3,5-Trimethylbenzene		22	U
	Vinyl Chloride		45	U
	m+p Xylene		45	U
	o-Xylene		22	U

Notes:

mg/kg - milligrams per kilogram or parts per million (ppm).

U - Compound was not detected at specified quantitation limit.

Values in **Bold** indicate the compound was detected.

Table 7
Groundwater Elevations
New Bedford High School
New Bedford, Massachusetts

Well Location	Ground/Floor Elevation	Reference Elevation [1]	February 2010			April 2010			May 2010			September 2010		
			Gauging Date	Depth to Water [2]	Groundwater Elevation	Gauging Date	Depth to Water [2]	Groundwater Elevation	Gauging Date	Depth to Water [2]	Groundwater Elevation	Gauging Date	Depth to Water [2]	Groundwater Elevation
MW-4	84.68	84.53	2/17/2010	1.97	82.56	4/9/2010	0.89	83.64	5/17/2010	2.20	82.33	9/7/2010	3.90	80.63
MW-5	84.71	84.55	2/17/2010	1.95	82.60	4/7/2010	1.43	83.12	5/17/2010	2.02	82.53	9/7/2010	3.73	80.82
MW-5D	84.26	83.98	NA	NA	NA	NA	NA	NA	NA	NA	NA	9/7/2010	3.15	80.83
MW-6 [3]	84.74	84.59	2/17/2010	1.54	83.05	4/9/2010	0.67	83.92	5/17/2010	1.70	82.89	9/7/2010	3.47	81.12
MW-7	91.38	91.10	2/17/2010	8.67	82.43	4/7/2010	7.14	83.96	5/17/2010	8.85	82.25	9/7/2010	10.64	80.46
MW-7D	91.30	90.85	NA	NA	NA	NA	NA	NA	NA	NA	NA	9/7/2010	10.57	80.28
MW-8A	89.57	89.35	2/17/2010	4.11	85.24	4/7/2010	2.56	86.79	5/17/2010	4.48	84.87	9/7/2010	5.97	83.38
MW-8B [4]	89.59	89.50	NM	NM	NM	4/7/2010	2.71	86.79	5/17/2010	4.60	84.90	9/7/2010	6.12	83.38
MW-11	83.97	83.86	2/17/2010	0.29	83.57	4/7/2010	0.00	83.86	5/17/2010	1.47	82.39	9/7/2010	3.14	80.72
MW-12	89.70	89.37	2/17/2010	6.39	82.98	4/7/2010	5.06	84.31	5/17/2010	6.56	82.81	9/7/2010	8.40	80.97
MW-13	84.23	83.87	2/17/2010	0.90	82.97	4/7/2010	0.12	83.75	5/17/2010	1.10	82.77	9/7/2010	2.82	81.04
MW-14	84.02	83.64	2/17/2010	0.48	83.16	4/7/2010	0.08	83.56	5/17/2010	0.67	82.97	9/7/2010	2.37	81.27
MW-15	89.47	89.23	2/17/2010	5.94	83.29	4/7/2010	5.28	83.95	5/17/2010	6.11	83.12	9/7/2010	7.80	81.43
MW-16	84.12	83.85	2/19/2010	1.00	82.85	4/7/2010	1.06	82.79	5/17/2010	0.86	82.99	9/7/2010	2.85	81.00
MW-17	89.88	89.67	2/17/2010	6.71	82.96	4/7/2010	5.86	83.81	5/17/2010	6.88	82.79	9/7/2010	8.65	81.01
MW-18	84.28	84.09	2/17/2010	0.36	83.73	4/7/2010	0.85	83.24	5/17/2010	1.50	82.59	9/7/2010	3.20	80.89
MW-19	88.76	88.58	2/17/2010	6.26	82.32	4/7/2010	4.59	83.99	5/17/2010	6.50	82.08	9/7/2010	8.57	80.01
MW-20	95.78	95.4	NA	NA	NA	4/7/2010	12.12	83.28	5/17/2010	13.52	81.88	9/7/2010	15.10	80.30
MW-21	92.56	92.22	NA	NA	NA	4/7/2010	8.27	83.95	5/17/2010	9.71	82.51	9/7/2010	11.55	80.67
MW-22	90.85	90.46	NA	NA	NA	4/7/2010	6.43	84.03	5/17/2010	8.03	82.43	9/7/2010	9.85	80.61
MW-23	89.42	89.12	NA	NA	NA	4/7/2010	5.21	83.91	5/17/2010	7.21	81.91	9/7/2010	8.79	80.33
MW-24	89.21	88.75	NA	NA	NA	4/7/2010	5.27	83.48	5/17/2010	7.91	80.84	9/7/2010	9.20	79.55
MW-25	87.53	87.28	NA	NA	NA	NA	NA	NA	NA	NA	NA	9/7/2010	8.11	79.17
MW-26	86.47	86.10	NA	NA	NA	NA	NA	NA	NA	NA	NA	9/7/2010	7.05	79.05
MW-27	84.66	84.44	NA	NA	NA	NA	NA	NA	NA	NA	NA	9/7/2010	3.66	80.78
MW-28	84.70	84.56	NA	NA	NA	NA	NA	NA	NA	NA	NA	9/7/2010	3.75	80.81
MW-29	84.71	84.54	NA	NA	NA	NA	NA	NA	NA	NA	NA	9/7/2010	3.43	81.11
MW-HH-13	88.17	87.85	2/18/2010	4.35	83.50	4/7/2010	3.52	84.33	5/17/2010	4.48	83.37	9/7/2010	6.16	81.69
MW-HRC-33	86.26	86.09	2/17/2010	3.88	82.21	4/7/2010	2.65	83.44	5/17/2010	4.41	81.68	9/7/2010	4.71	81.38

NOTES:
(1) - Survey of top of PVC riser.
(2) - Measure from top of PVC riser.
(3) - Approximate riser elevation (no survey data) assumed to be 0.15-feet below floor elevation.
(4) - 1-inch diameter well located immediately adjacent to MW-8A.
NM - Not measured.
NA - Not available.

FIGURES

TRC
650 Suffolk St.
Wannalancit Mills
Lowell, MA 01854

FIGURE 1
SITE AERIAL PHOTOGRAPH
New Bedford High School
NEW BEDFORD, MASSACHUSETTS

R:\Projects\GIS_2007\54634_NBedford\FIG1_NEWBEDHSCH_REV031710.mxd

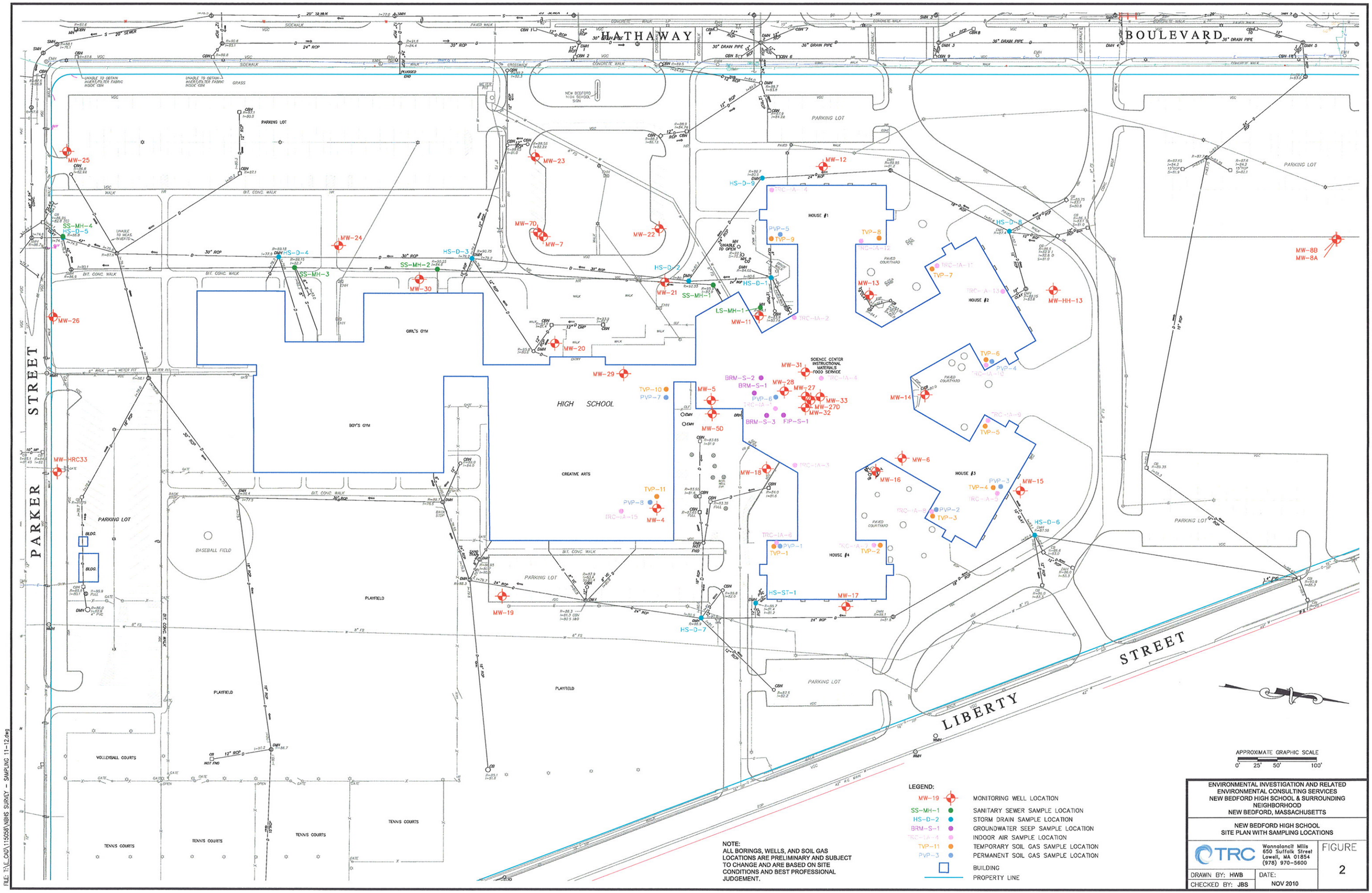
HATHAWAY
BOULEVARD
PARKER
STREET
LIBERTY
STREET
HIGH SCHOOL
GIRL'S GYM
BOY'S GYM
CREATIVE ARTS
SCIENCE CENTER INSTRUCTIONAL MATERIALS FOOD SERVICE
HOUSE #1
HOUSE #2
HOUSE #3
HOUSE #4
PAVED COURTYARD
PARKING LOT
BASEBALL FIELD
PLAYFIELD
VOLLEYBALL COURTS
TENNIS COURTS
NEW BEDFORD HIGH SCHOOL SIGN
MW-25
MW-26
MW-HRC33
MW-24
MW-23
MW-7D
MW-7
MW-22
MW-12
MW-13
MW-HH-13
MW-8B
MW-8A
MW-30
MW-21
MW-20
MW-29
MW-11
MW-5
MW-5D
MW-31
MW-28
MW-27
MW-33
MW-27D
MW-32
MW-14
MW-18
MW-4
MW-16
MW-6
MW-15
MW-19
MW-17
SS-MH-4
HS-D-5
HS-D-4
SS-MH-3
HS-D-3
SS-MH-2
HS-D-2
SS-MH-1
HS-D-1
LS-MH-1
HS-D-9
HS-D-8
HS-D-6
HS-D-7
HS-ST-1
TVP-10
PVP-7
TVP-11
PVP-8
TRC-1A-15
TVP-8
TVP-9
PVP-5
TRC-1A-12
TVP-7
TVP-6
PVP-4
TVP-5
TVP-4
PVP-3
TVP-3
PVP-2
TVP-2
TVP-1
PVP-1
BRM-S-2
BRM-S-1
PVP-6
BRM-S-3
FIP-S-1
APPROXIMATE GRAPHIC SCALE
0' 25' 50' 100'
LEGEND:
MW-19 MONITORING WELL LOCATION
SS-MH-1 SANITARY SEWER SAMPLE LOCATION
HS-D-2 STORM DRAIN SAMPLE LOCATION
BRM-S-1 GROUNDWATER SEEP SAMPLE LOCATION
TRC-1A-4 INDOOR AIR SAMPLE LOCATION
TVP-11 TEMPORARY SOIL GAS SAMPLE LOCATION
PVP-3 PERMANENT SOIL GAS SAMPLE LOCATION
BUILDING
PROPERTY LINE
NOTE:
ALL BORINGS, WELLS, AND SOIL GAS LOCATIONS ARE PRELIMINARY AND SUBJECT TO CHANGE AND ARE BASED ON SITE CONDITIONS AND BEST PROFESSIONAL JUDGEMENT.
ENVIRONMENTAL INVESTIGATION AND RELATED ENVIRONMENTAL CONSULTING SERVICES
NEW BEDFORD HIGH SCHOOL & SURROUNDING NEIGHBORHOOD
NEW BEDFORD, MASSACHUSETTS
NEW BEDFORD HIGH SCHOOL
SITE PLAN WITH SAMPLING LOCATIONS
TRC
Wannalancit Mills
650 Suffolk Street
Lowell, MA 01854
(978) 970-5600
FIGURE
2
DRAWN BY: HWB
DATE:
CHECKED BY: JBS
NOV 2010
FILE: T:\E_CAD\115058\NBHS SURVEY - SAMPLING 11-12.dwg

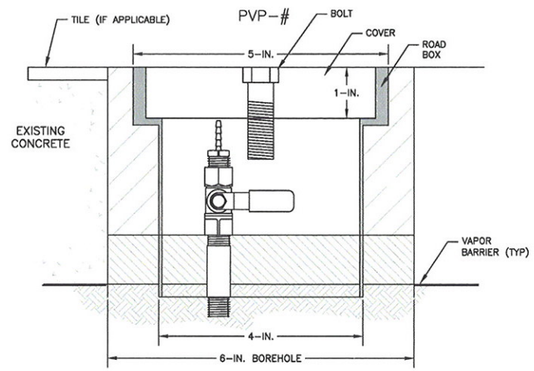

STANDARD EQUIPMENT/INSTALLATION DETAIL

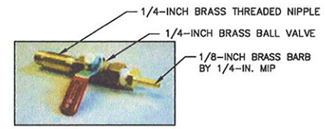

BRASS VALVE DETAIL

LEGEND:

- GROUT/PORTLAND CEMENT MIX
- HYDRAULIC CEMENT
- NATIVE SOIL

PVP-1

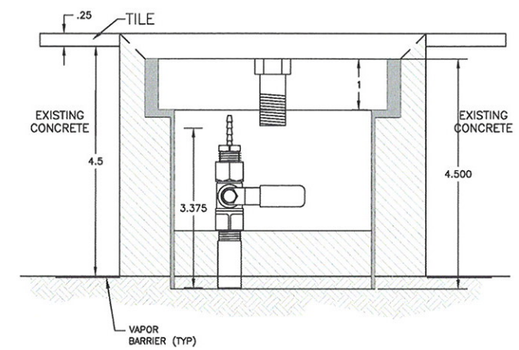

PVP-2

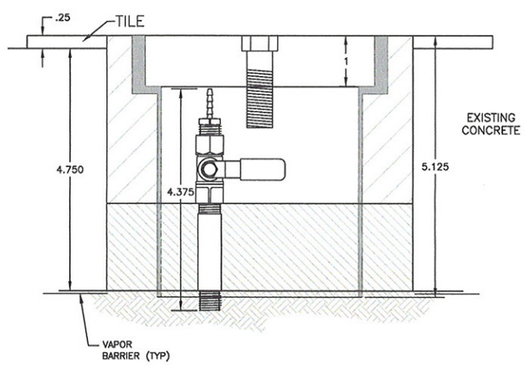

PVP-3

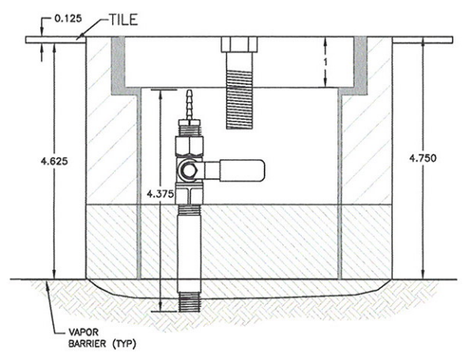

PVP-4

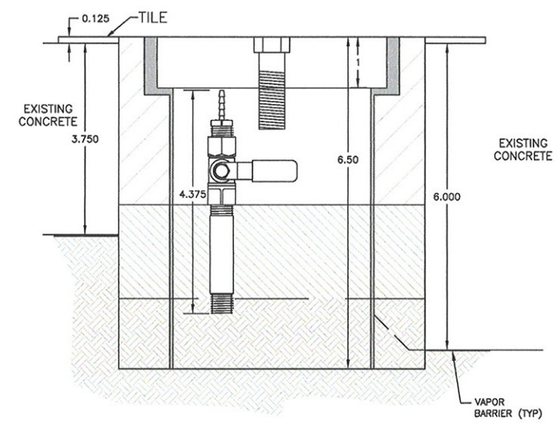

PVP-5

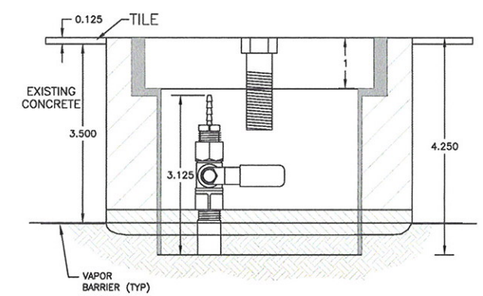

PVP-6

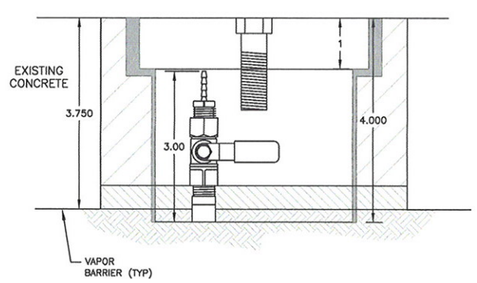

PVP-7

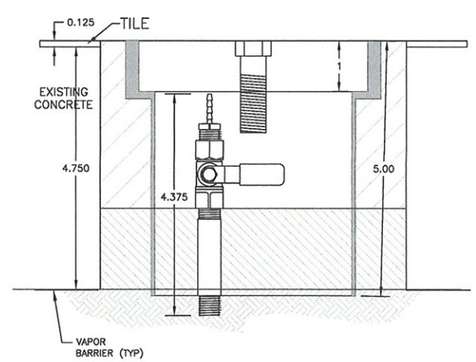

PVP-8

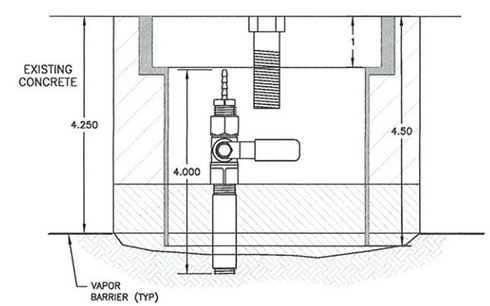

NOT TO SCALE
MEASUREMENTS ARE IN INCHES

NEW BEDFORD HIGH SCHOOL
NEW BEDFORD, MASSACHUSETTS

PERMANENT SOIL GAS SAMPLING POINTS
INSTALLATION DETAILS

TRC
Wannalancit Mills
650 Suffolk Street
Lowell, MA 01854
(978) 970-5600

FIGURE
3

DRAWN BY: MAN
CHECKED BY: JSG
DATE:
MARCH 2010

FILE: T:\E_CAD\115058\NBHS\SOIL VAPOR PNTstd.dwg

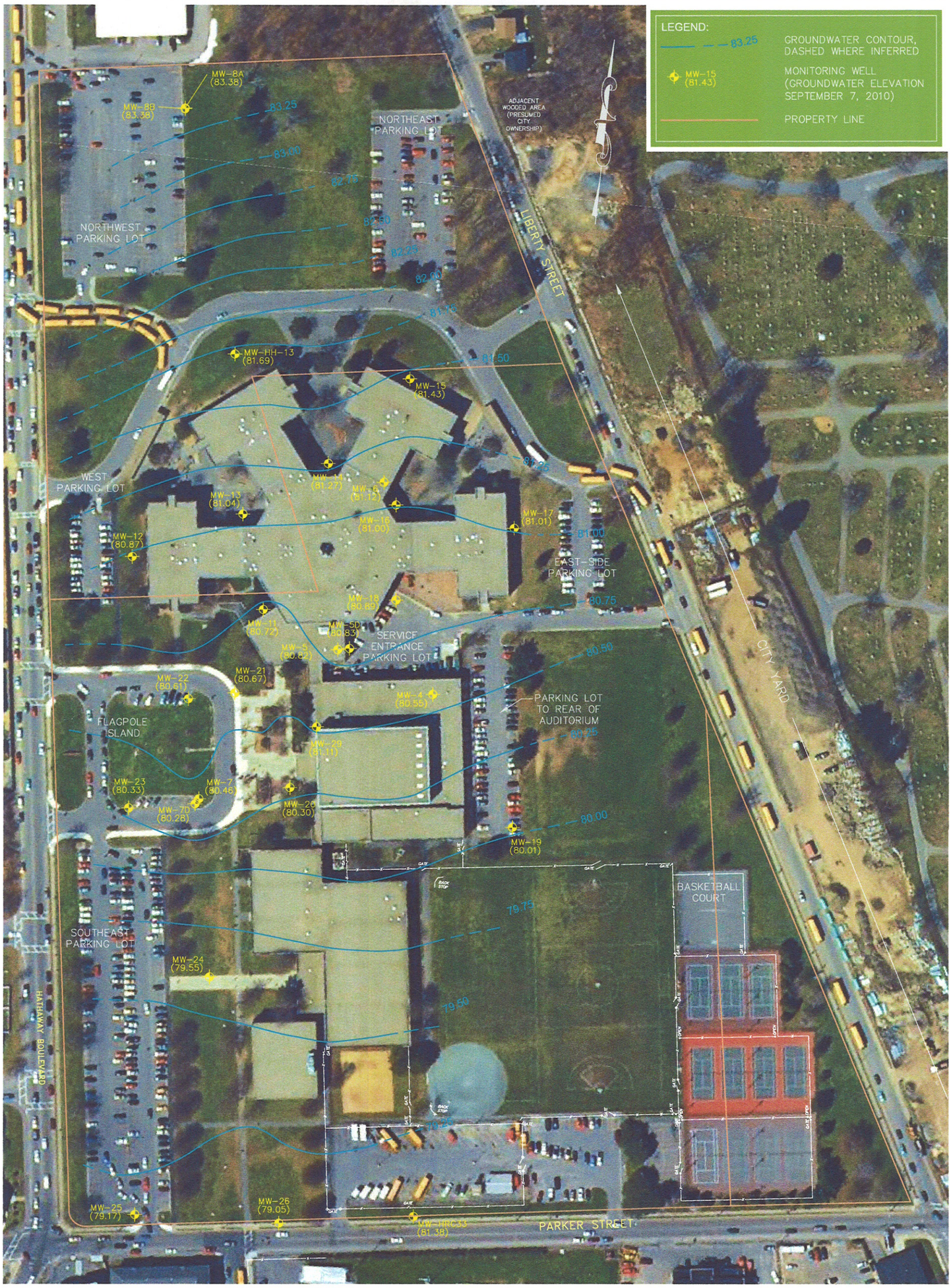

APPROXIMATE GRAPHIC SCALE

0' 150' 300'

NOTES:
1. ALL BORINGS, WELLS, AND SOIL GAS LOCATIONS ARE PRELIMINARY AND SUBJECT TO CHANGE AND ARE BASED ON SITE CONDITIONS AND BEST PROFESSIONAL JUDGEMENT.
2. DEEP MONITORING WELLS (MW-5D AND MW-7D) AND ANOMALOUS MONITORING WELL MW-HRC-33 WATER TABLE ELEVATIONS NOT INCLUDED IN GROUNDWATER CONTOURS.

ENVIRONMENTAL INVESTIGATION AND RELATED ENVIRONMENTAL CONSULTING SERVICES
NEW BEDFORD HIGH SCHOOL & SURROUNDING NEIGHBORHOOD
NEW BEDFORD, MASSACHUSETTS

NEW BEDFORD HIGH SCHOOL
ESTIMATED GROUNDWATER CONTOUR MAP (SEPTEMBER 7, 2010)

TRC
Wannalancit Mills
650 Suffolk Street
Lowell, MA 01854
(978) 970-5600

FIGURE 4

DRAWN BY: HWB
CHECKED BY: JBS
DATE: NOV 2010

FILE: T:\E_CAD\115058\NBHS GW MW 11-10.dwg

APPENDIX A

LABORATORY DATA REPORTS

ANALYTICAL REPORT

Lab Number:	L1016683
Client:	TRC Environmental Consultants Wannalancit Mills 650 Suffolk Street Lowell, MA 01854
ATTN:	David Sullivan
Phone:	(978) 656-3565
Project Name:	CITY OF NEW BEDFORD
Project Number:	115058
Report Date:	10/29/10

Certifications & Approvals: MA (M-MA086), NY NELAC (11148), CT (PH-0574), NH (2003), NJ (MA935), RI (LAO00065), ME (MA0086), PA (Registration #68-03671), USDA (Permit #S-72578), US Army Corps of Engineers, Naval FESC.

Eight Walkup Drive, Westborough, MA 01581-1019
508-898-9220 (Fax) 508-898-9193 800-624-9220 - www.alphalab.com

Project Name: CITY OF NEW BEDFORD
Project Number: 115058

Lab Number: L1016683
Report Date: 10/29/10

Alpha Sample ID	Client ID	Sample Location	Collection Date/Time
L1016683-01	MW-32	NBHS	10/21/10 10:45
L1016683-02	MW-31	NBHS	10/21/10 11:00
L1016683-03	MW-28	NBHS	10/21/10 13:55
L1016683-04	MW-33	NBHS	10/21/10 14:10
L1016683-05	MW-24	NBHS	10/21/10 15:50
L1016683-06	MW-27	NBHS	10/21/10 16:05
L1016683-07	D-1-24	NBHS	10/21/10 16:50
L1016683-08	MW-30	NBHS	10/22/10 09:50
L1016683-09	MW-7	NBHS	10/22/10 10:20
L1016683-10	TRIP BLANK	NBHS	10/21/10 00:00

Project Name: CITY OF NEW BEDFORD **Lab Number:** L1016683

Project Number: 115058 **Report Date:** 10/29/10

MADEP MCP Response Action Analytical Report Certification

This form provides certifications for all samples performed by MCP methods. Please refer to the Sample Results and Container Information sections of this report for specification of MCP methods used for each analysis. The following questions pertain only to MCP Analytical Methods.

An affirmative response to questions A through F is required for "Presumptive Certainty" status		
A	Were all samples received in a condition consistent with those described on the Chain-of-Custody, properly preserved (including temperature) in the field or laboratory, and prepared/analyzed within method holding times?	YES
B	Were the analytical method(s) and all associated QC requirements specified in the selected CAM protocol(s) followed?	YES
C	Were all required corrective actions and analytical response actions specified in the selected CAM protocol(s) implemented for all identified performance standard non-conformances?	YES
D	Does the laboratory report comply with all the reporting requirements specified in CAM VII A, "Quality Assurance and Quality Control Guidelines for the Acquisition and Reporting of Analytical Data?"	YES
E a.	VPH, EPH, and APH Methods only: Was each method conducted without significant modification(s)? (Refer to the individual method(s) for a list of significant modifications).	N/A
E b.	APH and TO-15 Methods only: Was the complete analyte list reported for each method?	N/A
F	Were all applicable CAM protocol QC and performance standard non-conformances identified and evaluated in a laboratory narrative (including all "No" responses to Questions A through E)?	YES

A response to questions G, H and I is required for "Presumptive Certainty" status		
G	Were the reporting limits at or below all CAM reporting limits specified in the selected CAM protocol(s)?	NO
H	Were all QC performance standards specified in the CAM protocol(s) achieved?	NO
I	Were results reported for the complete analyte list specified in the selected CAM protocol(s)?	YES

For any questions answered "No", please refer to the case narrative section on the following page(s).

Please note that sample matrix information is located in the Sample Results section of this report.

Project Name: CITY OF NEW BEDFORD **Lab Number:** L1016683
Project Number: 115058 **Report Date:** 10/29/10

Case Narrative

The samples were received in accordance with the Chain of Custody and no significant deviations were encountered during the preparation or analysis unless otherwise noted. Sample Receipt, Container Information, and the Chain of Custody are located at the back of the report.

Results contained within this report relate only to the samples submitted under this Alpha Lab Number and meet all of the requirements of NELAC, for all NELAC accredited parameters. The data presented in this report is organized by parameter (i.e. VOC, SVOC, etc.). Sample specific Quality Control data (i.e. Surrogate Spike Recovery) is reported at the end of the target analyte list for each individual sample, followed by the Laboratory Batch Quality Control at the end of each parameter. If a sample was re-analyzed or re-extracted due to a required quality control corrective action and if both sets of data are reported, the Laboratory ID of the re-analysis or re-extraction is designated with an "R" or "RE", respectively. When multiple Batch Quality Control elements are reported (e.g. more than one LCS), the associated samples for each element are noted in the grey shaded header line of each data table. Any Laboratory Batch, Sample Specific % recovery or RPD value that is outside the listed Acceptance Criteria is bolded in the report. Definitions of all data qualifiers and acronyms used in this report are provided in the Glossary located at the back of the report.

Please see the associated ADEx data file for a comparison of laboratory reporting limits that were achieved with the regulatory Numerical Standards requested on the Chain of Custody.

For additional information, please contact Client Services at 800-624-9220.

MCP Related Narratives

Volatile Organics

L1016683-06 has elevated detection limits due to the dilution required by the elevated concentrations of target compounds in the sample.

In reference to question G:

L1016683-01 through -05 and -07 through -10: The requested CAM reporting limit was not achieved for Tetrahydrofuran.

L1016683-06: The requested CAM reporting limits were not achieved for Methylene chloride, 1,1-Dichloroethane, Chloroform, Carbon tetrachloride, 1,2-Dichloropropane, Dibromochloromethane, 1,1,2-Trichloroethane, Tetrachloroethene, Chlorobenzene, Trichlorofluoromethane, 1,2-Dichloroethane, 1,1,1-Trichloroethane, Bromodichloromethane, trans-1,3-Dichloropropene, cis-1,3-Dichloropropene, 1,1-

Project Name: CITY OF NEW BEDFORD **Lab Number:** L1016683
Project Number: 115058 **Report Date:** 10/29/10

Case Narrative (continued)

Dichloropropene, Bromoform, 1,1,2,2-Tetrachloroethane, Benzene, Toluene, Ethylbenzene, Chloromethane, Bromomethane, Vinyl chloride, Chloroethane, 1,1-Dichloroethene, trans-1,2-Dichloroethene, 1,2-Dichlorobenzene, 1,3-Dichlorobenzene, 1,4-Dichlorobenzene, Methyl tert butyl ether, p/m-Xylene, o-Xylene, Dibromomethane, 1,2,3-Trichloropropane, Styrene, Dichlorodifluoromethane, Acetone, Carbon disulfide, 2-Butanone, 4-Methyl-2-pentanone, 2-Hexanone, Bromochloromethane, Tetrahydrofuran, 2,2-Dichloropropane, 1,2-Dibromoethane, 1,3-Dichloropropane, 1,1,1,2-Tetrachloroethane, Bromobenzene, n-Butylbenzene, sec-Butylbenzene, tert-Butylbenzene, o-Chlorotoluene, p-Chlorotoluene, 1,2-Dibromo-3-chloropropane, Hexachlorobutadiene, Isopropylbenzene, p-Isopropyltoluene, Naphthalene, n-Propylbenzene, 1,2,3-Trichlorobenzene, 1,2,4-Trichlorobenzene, 1,3,5-Trimethylbenzene, 1,2,4-Trimethylbenzene, Ethyl ether, Isopropyl Ether, Ethyl-Tert-Butyl-Ether, Tertiary-Amyl Methyl Ether and 1,4-Dioxane.

In reference to question H:

The WG440189-1 LCS recoveries, associated with L1016683-01, -03, -04, -06 and -08, are below the acceptance criteria for Dibromochloromethane (69%) and Bromoform (68%); however, they have been identified as "difficult" analytes and are within the 40-160% acceptance limits. The results of the associated samples are reported; however, all results are considered to have a potentially low bias for these compounds.

The initial calibration, associated with L1016683-01 through -10, did not meet the method required minimum response factors for 2-Butanone, 4-Methyl-2-pentanone, Tetrahydrofuran and 1,4-Dioxane and utilized quadratic fits for Acetone and 1,2-Dibromo-3-chloropropane.

The continuing calibration standards, associated with L1016683-01 through -10, are outside the acceptance criteria for several compounds; however, they are within overall method allowances. Copies of the continuing calibration standards are included as addenda to this report.

I, the undersigned, attest under the pains and penalties of perjury that, to the best of my knowledge and belief and based upon my personal inquiry of those responsible for providing the information contained in this analytical report, such information is accurate and complete. This certificate of analysis is not complete unless this page accompanies any and all pages of this report.

Authorized Signature: Michelle M. Morris

Title: Technical Director/Representative Date: 10/29/10

ORGANICS

VOLATILES

Project Name: CITY OF NEW BEDFORD **Lab Number:** L1016683

Project Number: 115058 **Report Date:** 10/29/10

SAMPLE RESULTS

Lab ID:	L1016683-01	Date Collected:	10/21/10 10:45
Client ID:	MW-32	Date Received:	10/22/10
Sample Location:	NBHS	Field Prep:	Not Specified
Matrix:	Water		
Analytical Method:	97,8260B		
Analytical Date:	10/29/10 13:16		
Analyst:	MM		

Parameter	Result	Qualifier	Units	RL	MDL	Dilution Factor
MCP Volatile Organics - Westborough Lab						
Methylene chloride	ND		ug/l	2.0	--	1
1,1-Dichloroethane	ND		ug/l	1.0	--	1
Chloroform	ND		ug/l	1.0	--	1
Carbon tetrachloride	ND		ug/l	1.0	--	1
1,2-Dichloropropane	ND		ug/l	1.0	--	1
Dibromochloromethane	ND		ug/l	1.0	--	1
1,1,2-Trichloroethane	ND		ug/l	1.0	--	1
Tetrachloroethene	ND		ug/l	1.0	--	1
Chlorobenzene	ND		ug/l	1.0	--	1
Trichlorofluoromethane	ND		ug/l	2.0	--	1
1,2-Dichloroethane	ND		ug/l	1.0	--	1
1,1,1-Trichloroethane	ND		ug/l	1.0	--	1
Bromodichloromethane	ND		ug/l	1.0	--	1
trans-1,3-Dichloropropene	ND		ug/l	0.50	--	1
cis-1,3-Dichloropropene	ND		ug/l	0.50	--	1
1,1-Dichloropropene	ND		ug/l	2.0	--	1
Bromoform	ND		ug/l	2.0	--	1
1,1,2,2-Tetrachloroethane	ND		ug/l	1.0	--	1
Benzene	ND		ug/l	1.0	--	1
Toluene	ND		ug/l	1.0	--	1
Ethylbenzene	ND		ug/l	1.0	--	1
Chloromethane	ND		ug/l	2.0	--	1
Bromomethane	ND		ug/l	2.0	--	1
Vinyl chloride	ND		ug/l	1.0	--	1
Chloroethane	ND		ug/l	2.0	--	1
1,1-Dichloroethene	ND		ug/l	1.0	--	1
trans-1,2-Dichloroethene	ND		ug/l	1.0	--	1
Trichloroethene	1.1		ug/l	1.0	--	1
1,2-Dichlorobenzene	ND		ug/l	1.0	--	1
1,3-Dichlorobenzene	ND		ug/l	1.0	--	1

Project Name: CITY OF NEW BEDFORD **Lab Number:** L1016683

Project Number: 115058 **Report Date:** 10/29/10

SAMPLE RESULTS

Lab ID: L1016683-01 Date Collected: 10/21/10 10:45

Client ID: MW-32 Date Received: 10/22/10

Sample Location: NBHS Field Prep: Not Specified

Parameter	Result	Qualifier	Units	RL	MDL	Dilution Factor
MCP Volatile Organics - Westborough Lab						
1,4-Dichlorobenzene	ND		ug/l	1.0	--	1
Methyl tert butyl ether	ND		ug/l	2.0	--	1
p/m-Xylene	ND		ug/l	2.0	--	1
o-Xylene	ND		ug/l	1.0	--	1
cis-1,2-Dichloroethene	4.5		ug/l	1.0	--	1
Dibromomethane	ND		ug/l	2.0	--	1
1,2,3-Trichloropropane	ND		ug/l	2.0	--	1
Styrene	ND		ug/l	1.0	--	1
Dichlorodifluoromethane	ND		ug/l	2.0	--	1
Acetone	ND		ug/l	5.0	--	1
Carbon disulfide	ND		ug/l	2.0	--	1
2-Butanone	ND		ug/l	5.0	--	1
4-Methyl-2-pentanone	ND		ug/l	5.0	--	1
2-Hexanone	ND		ug/l	5.0	--	1
Bromochloromethane	ND		ug/l	2.0	--	1
Tetrahydrofuran	ND		ug/l	10	--	1
2,2-Dichloropropane	ND		ug/l	2.0	--	1
1,2-Dibromoethane	ND		ug/l	2.0	--	1
1,3-Dichloropropane	ND		ug/l	2.0	--	1
1,1,1,2-Tetrachloroethane	ND		ug/l	1.0	--	1
Bromobenzene	ND		ug/l	2.0	--	1
n-Butylbenzene	ND		ug/l	2.0	--	1
sec-Butylbenzene	ND		ug/l	2.0	--	1
tert-Butylbenzene	ND		ug/l	2.0	--	1
o-Chlorotoluene	ND		ug/l	2.0	--	1
p-Chlorotoluene	ND		ug/l	2.0	--	1
1,2-Dibromo-3-chloropropane	ND		ug/l	2.0	--	1
Hexachlorobutadiene	ND		ug/l	0.60	--	1
Isopropylbenzene	ND		ug/l	2.0	--	1
p-Isopropyltoluene	ND		ug/l	2.0	--	1
Naphthalene	ND		ug/l	2.0	--	1
n-Propylbenzene	ND		ug/l	2.0	--	1
1,2,3-Trichlorobenzene	ND		ug/l	2.0	--	1
1,2,4-Trichlorobenzene	ND		ug/l	2.0	--	1
1,3,5-Trimethylbenzene	ND		ug/l	2.0	--	1
1,2,4-Trimethylbenzene	ND		ug/l	2.0	--	1
Ethyl ether	ND		ug/l	2.0	--	1

Project Name: CITY OF NEW BEDFORD **Lab Number:** L1016683

Project Number: 115058 **Report Date:** 10/29/10

SAMPLE RESULTS

Lab ID:	L1016683-01	Date Collected:	10/21/10 10:45
Client ID:	MW-32	Date Received:	10/22/10
Sample Location:	NBHS	Field Prep:	Not Specified

Parameter	Result	Qualifier	Units	RL	MDL	Dilution Factor
MCP Volatile Organics - Westborough Lab						
Isopropyl Ether	ND		ug/l	2.0	--	1
Ethyl-Tert-Butyl-Ether	ND		ug/l	2.0	--	1
Tertiary-Amyl Methyl Ether	ND		ug/l	2.0	--	1
1,4-Dioxane	ND		ug/l	250	--	1

Surrogate	% Recovery	Qualifier	Acceptance Criteria
1,2-Dichloroethane-d4	105		70-130
Toluene-d8	103		70-130
4-Bromofluorobenzene	105		70-130
Dibromofluoromethane	99		70-130

Project Name: CITY OF NEW BEDFORD **Lab Number:** L1016683

Project Number: 115058 **Report Date:** 10/29/10

SAMPLE RESULTS

Lab ID:	L1016683-02	Date Collected:	10/21/10 11:00
Client ID:	MW-31	Date Received:	10/22/10
Sample Location:	NBHS	Field Prep:	Not Specified
Matrix:	Water		
Analytical Method:	97,8260B		
Analytical Date:	10/28/10 23:54		
Analyst:	MM		

Parameter	Result	Qualifier	Units	RL	MDL	Dilution Factor
MCP Volatile Organics - Westborough Lab						
Methylene chloride	ND		ug/l	2.0	--	1
1,1-Dichloroethane	ND		ug/l	1.0	--	1
Chloroform	ND		ug/l	1.0	--	1
Carbon tetrachloride	ND		ug/l	1.0	--	1
1,2-Dichloropropane	ND		ug/l	1.0	--	1
Dibromochloromethane	ND		ug/l	1.0	--	1
1,1,2-Trichloroethane	ND		ug/l	1.0	--	1
Tetrachloroethene	ND		ug/l	1.0	--	1
Chlorobenzene	ND		ug/l	1.0	--	1
Trichlorofluoromethane	ND		ug/l	2.0	--	1
1,2-Dichloroethane	ND		ug/l	1.0	--	1
1,1,1-Trichloroethane	ND		ug/l	1.0	--	1
Bromodichloromethane	ND		ug/l	1.0	--	1
trans-1,3-Dichloropropene	ND		ug/l	0.50	--	1
cis-1,3-Dichloropropene	ND		ug/l	0.50	--	1
1,1-Dichloropropene	ND		ug/l	2.0	--	1
Bromoform	ND		ug/l	2.0	--	1
1,1,2,2-Tetrachloroethane	ND		ug/l	1.0	--	1
Benzene	ND		ug/l	1.0	--	1
Toluene	ND		ug/l	1.0	--	1
Ethylbenzene	ND		ug/l	1.0	--	1
Chloromethane	ND		ug/l	2.0	--	1
Bromomethane	ND		ug/l	2.0	--	1
Vinyl chloride	ND		ug/l	1.0	--	1
Chloroethane	ND		ug/l	2.0	--	1
1,1-Dichloroethene	ND		ug/l	1.0	--	1
trans-1,2-Dichloroethene	ND		ug/l	1.0	--	1
Trichloroethene	ND		ug/l	1.0	--	1
1,2-Dichlorobenzene	ND		ug/l	1.0	--	1
1,3-Dichlorobenzene	ND		ug/l	1.0	--	1

Project Name: CITY OF NEW BEDFORD **Lab Number:** L1016683

Project Number: 115058 **Report Date:** 10/29/10

SAMPLE RESULTS

Lab ID: L1016683-02 Date Collected: 10/21/10 11:00

Client ID: MW-31 Date Received: 10/22/10

Sample Location: NBHS Field Prep: Not Specified

Parameter	Result	Qualifier	Units	RL	MDL	Dilution Factor
MCP Volatile Organics - Westborough Lab						
1,4-Dichlorobenzene	ND		ug/l	1.0	--	1
Methyl tert butyl ether	ND		ug/l	2.0	--	1
p/m-Xylene	ND		ug/l	2.0	--	1
o-Xylene	ND		ug/l	1.0	--	1
cis-1,2-Dichloroethene	ND		ug/l	1.0	--	1
Dibromomethane	ND		ug/l	2.0	--	1
1,2,3-Trichloropropane	ND		ug/l	2.0	--	1
Styrene	ND		ug/l	1.0	--	1
Dichlorodifluoromethane	ND		ug/l	2.0	--	1
Acetone	ND		ug/l	5.0	--	1
Carbon disulfide	ND		ug/l	2.0	--	1
2-Butanone	ND		ug/l	5.0	--	1
4-Methyl-2-pentanone	ND		ug/l	5.0	--	1
2-Hexanone	ND		ug/l	5.0	--	1
Bromochloromethane	ND		ug/l	2.0	--	1
Tetrahydrofuran	ND		ug/l	10	--	1
2,2-Dichloropropane	ND		ug/l	2.0	--	1
1,2-Dibromoethane	ND		ug/l	2.0	--	1
1,3-Dichloropropane	ND		ug/l	2.0	--	1
1,1,1,2-Tetrachloroethane	ND		ug/l	1.0	--	1
Bromobenzene	ND		ug/l	2.0	--	1
n-Butylbenzene	ND		ug/l	2.0	--	1
sec-Butylbenzene	ND		ug/l	2.0	--	1
tert-Butylbenzene	ND		ug/l	2.0	--	1
o-Chlorotoluene	ND		ug/l	2.0	--	1
p-Chlorotoluene	ND		ug/l	2.0	--	1
1,2-Dibromo-3-chloropropane	ND		ug/l	2.0	--	1
Hexachlorobutadiene	ND		ug/l	0.60	--	1
Isopropylbenzene	ND		ug/l	2.0	--	1
p-Isopropyltoluene	ND		ug/l	2.0	--	1
Naphthalene	ND		ug/l	2.0	--	1
n-Propylbenzene	ND		ug/l	2.0	--	1
1,2,3-Trichlorobenzene	ND		ug/l	2.0	--	1
1,2,4-Trichlorobenzene	ND		ug/l	2.0	--	1
1,3,5-Trimethylbenzene	ND		ug/l	2.0	--	1
1,2,4-Trimethylbenzene	ND		ug/l	2.0	--	1
Ethyl ether	ND		ug/l	2.0	--	1

Project Name: CITY OF NEW BEDFORD **Lab Number:** L1016683

Project Number: 115058 **Report Date:** 10/29/10

SAMPLE RESULTS

Lab ID:	L1016683-02	Date Collected:	10/21/10 11:00
Client ID:	MW-31	Date Received:	10/22/10
Sample Location:	NBHS	Field Prep:	Not Specified

Parameter	Result	Qualifier	Units	RL	MDL	Dilution Factor
MCP Volatile Organics - Westborough Lab						
Isopropyl Ether	ND		ug/l	2.0	--	1
Ethyl-Tert-Butyl-Ether	ND		ug/l	2.0	--	1
Tertiary-Amyl Methyl Ether	ND		ug/l	2.0	--	1
1,4-Dioxane	ND		ug/l	250	--	1

Surrogate	% Recovery	Qualifier	Acceptance Criteria
1,2-Dichloroethane-d4	105		70-130
Toluene-d8	105		70-130
4-Bromofluorobenzene	104		70-130
Dibromofluoromethane	99		70-130

Project Name: CITY OF NEW BEDFORD **Lab Number:** L1016683

Project Number: 115058 **Report Date:** 10/29/10

SAMPLE RESULTS

Lab ID:	L1016683-03	Date Collected:	10/21/10 13:55
Client ID:	MW-28	Date Received:	10/22/10
Sample Location:	NBHS	Field Prep:	Not Specified
Matrix:	Water		
Analytical Method:	97,8260B		
Analytical Date:	10/29/10 11:10		
Analyst:	MM		

Parameter	Result	Qualifier	Units	RL	MDL	Dilution Factor
MCP Volatile Organics - Westborough Lab						
Methylene chloride	ND		ug/l	2.0	--	1
1,1-Dichloroethane	ND		ug/l	1.0	--	1
Chloroform	ND		ug/l	1.0	--	1
Carbon tetrachloride	ND		ug/l	1.0	--	1
1,2-Dichloropropane	ND		ug/l	1.0	--	1
Dibromochloromethane	ND		ug/l	1.0	--	1
1,1,2-Trichloroethane	ND		ug/l	1.0	--	1
Tetrachloroethene	ND		ug/l	1.0	--	1
Chlorobenzene	8.5		ug/l	1.0	--	1
Trichlorofluoromethane	ND		ug/l	2.0	--	1
1,2-Dichloroethane	ND		ug/l	1.0	--	1
1,1,1-Trichloroethane	ND		ug/l	1.0	--	1
Bromodichloromethane	ND		ug/l	1.0	--	1
trans-1,3-Dichloropropene	ND		ug/l	0.50	--	1
cis-1,3-Dichloropropene	ND		ug/l	0.50	--	1
1,1-Dichloropropene	ND		ug/l	2.0	--	1
Bromoform	ND		ug/l	2.0	--	1
1,1,2,2-Tetrachloroethane	ND		ug/l	1.0	--	1
Benzene	ND		ug/l	1.0	--	1
Toluene	ND		ug/l	1.0	--	1
Ethylbenzene	ND		ug/l	1.0	--	1
Chloromethane	ND		ug/l	2.0	--	1
Bromomethane	ND		ug/l	2.0	--	1
Vinyl chloride	3.8		ug/l	1.0	--	1
Chloroethane	ND		ug/l	2.0	--	1
1,1-Dichloroethene	ND		ug/l	1.0	--	1
trans-1,2-Dichloroethene	2.9		ug/l	1.0	--	1
Trichloroethene	5.0		ug/l	1.0	--	1
1,2-Dichlorobenzene	ND		ug/l	1.0	--	1
1,3-Dichlorobenzene	2.5		ug/l	1.0	--	1

Project Name: CITY OF NEW BEDFORD **Lab Number:** L1016683

Project Number: 115058 **Report Date:** 10/29/10

SAMPLE RESULTS

Lab ID: L1016683-03 Date Collected: 10/21/10 13:55

Client ID: MW-28 Date Received: 10/22/10

Sample Location: NBHS Field Prep: Not Specified

Parameter	Result	Qualifier	Units	RL	MDL	Dilution Factor
MCP Volatile Organics - Westborough Lab						
1,4-Dichlorobenzene	11		ug/l	1.0	--	1
Methyl tert butyl ether	ND		ug/l	2.0	--	1
p/m-Xylene	ND		ug/l	2.0	--	1
o-Xylene	ND		ug/l	1.0	--	1
cis-1,2-Dichloroethene	11		ug/l	1.0	--	1
Dibromomethane	ND		ug/l	2.0	--	1
1,2,3-Trichloropropane	ND		ug/l	2.0	--	1
Styrene	ND		ug/l	1.0	--	1
Dichlorodifluoromethane	ND		ug/l	2.0	--	1
Acetone	ND		ug/l	5.0	--	1
Carbon disulfide	ND		ug/l	2.0	--	1
2-Butanone	ND		ug/l	5.0	--	1
4-Methyl-2-pentanone	ND		ug/l	5.0	--	1
2-Hexanone	ND		ug/l	5.0	--	1
Bromochloromethane	ND		ug/l	2.0	--	1
Tetrahydrofuran	ND		ug/l	10	--	1
2,2-Dichloropropane	ND		ug/l	2.0	--	1
1,2-Dibromoethane	ND		ug/l	2.0	--	1
1,3-Dichloropropane	ND		ug/l	2.0	--	1
1,1,1,2-Tetrachloroethane	ND		ug/l	1.0	--	1
Bromobenzene	ND		ug/l	2.0	--	1
n-Butylbenzene	ND		ug/l	2.0	--	1
sec-Butylbenzene	ND		ug/l	2.0	--	1
tert-Butylbenzene	ND		ug/l	2.0	--	1
o-Chlorotoluene	ND		ug/l	2.0	--	1
p-Chlorotoluene	ND		ug/l	2.0	--	1
1,2-Dibromo-3-chloropropane	ND		ug/l	2.0	--	1
Hexachlorobutadiene	ND		ug/l	0.60	--	1
Isopropylbenzene	ND		ug/l	2.0	--	1
p-Isopropyltoluene	ND		ug/l	2.0	--	1
Naphthalene	ND		ug/l	2.0	--	1
n-Propylbenzene	ND		ug/l	2.0	--	1
1,2,3-Trichlorobenzene	ND		ug/l	2.0	--	1
1,2,4-Trichlorobenzene	ND		ug/l	2.0	--	1
1,3,5-Trimethylbenzene	ND		ug/l	2.0	--	1
1,2,4-Trimethylbenzene	ND		ug/l	2.0	--	1
Ethyl ether	ND		ug/l	2.0	--	1

Project Name: CITY OF NEW BEDFORD **Lab Number:** L1016683

Project Number: 115058 **Report Date:** 10/29/10

SAMPLE RESULTS

Lab ID:	L1016683-03	Date Collected:	10/21/10 13:55
Client ID:	MW-28	Date Received:	10/22/10
Sample Location:	NBHS	Field Prep:	Not Specified

Parameter	Result	Qualifier	Units	RL	MDL	Dilution Factor
MCP Volatile Organics - Westborough Lab						
Isopropyl Ether	ND		ug/l	2.0	--	1
Ethyl-Tert-Butyl-Ether	ND		ug/l	2.0	--	1
Tertiary-Amyl Methyl Ether	ND		ug/l	2.0	--	1
1,4-Dioxane	ND		ug/l	250	--	1

Surrogate	% Recovery	Qualifier	Acceptance Criteria
1,2-Dichloroethane-d4	99		70-130
Toluene-d8	103		70-130
4-Bromofluorobenzene	100		70-130
Dibromofluoromethane	99		70-130

Project Name: CITY OF NEW BEDFORD **Lab Number:** L1016683

Project Number: 115058 **Report Date:** 10/29/10

SAMPLE RESULTS

Lab ID:	L1016683-04	Date Collected:	10/21/10 14:10
Client ID:	MW-33	Date Received:	10/22/10
Sample Location:	NBHS	Field Prep:	Not Specified
Matrix:	Water		
Analytical Method:	97,8260B		
Analytical Date:	10/29/10 11:41		
Analyst:	MM		

Parameter	Result	Qualifier	Units	RL	MDL	Dilution Factor
MCP Volatile Organics - Westborough Lab						
Methylene chloride	ND		ug/l	2.0	--	1
1,1-Dichloroethane	ND		ug/l	1.0	--	1
Chloroform	ND		ug/l	1.0	--	1
Carbon tetrachloride	ND		ug/l	1.0	--	1
1,2-Dichloropropane	ND		ug/l	1.0	--	1
Dibromochloromethane	ND		ug/l	1.0	--	1
1,1,2-Trichloroethane	ND		ug/l	1.0	--	1
Tetrachloroethene	ND		ug/l	1.0	--	1
Chlorobenzene	ND		ug/l	1.0	--	1
Trichlorofluoromethane	ND		ug/l	2.0	--	1
1,2-Dichloroethane	ND		ug/l	1.0	--	1
1,1,1-Trichloroethane	ND		ug/l	1.0	--	1
Bromodichloromethane	ND		ug/l	1.0	--	1
trans-1,3-Dichloropropene	ND		ug/l	0.50	--	1
cis-1,3-Dichloropropene	ND		ug/l	0.50	--	1
1,1-Dichloropropene	ND		ug/l	2.0	--	1
Bromoform	ND		ug/l	2.0	--	1
1,1,2,2-Tetrachloroethane	ND		ug/l	1.0	--	1
Benzene	ND		ug/l	1.0	--	1
Toluene	ND		ug/l	1.0	--	1
Ethylbenzene	ND		ug/l	1.0	--	1
Chloromethane	ND		ug/l	2.0	--	1
Bromomethane	ND		ug/l	2.0	--	1
Vinyl chloride	ND		ug/l	1.0	--	1
Chloroethane	ND		ug/l	2.0	--	1
1,1-Dichloroethene	ND		ug/l	1.0	--	1
trans-1,2-Dichloroethene	ND		ug/l	1.0	--	1
Trichloroethene	ND		ug/l	1.0	--	1
1,2-Dichlorobenzene	ND		ug/l	1.0	--	1
1,3-Dichlorobenzene	ND		ug/l	1.0	--	1

Project Name: CITY OF NEW BEDFORD **Lab Number:** L1016683

Project Number: 115058 **Report Date:** 10/29/10

SAMPLE RESULTS

Lab ID: L1016683-04 Date Collected: 10/21/10 14:10

Client ID: MW-33 Date Received: 10/22/10

Sample Location: NBHS Field Prep: Not Specified

Parameter	Result	Qualifier	Units	RL	MDL	Dilution Factor
MCP Volatile Organics - Westborough Lab						
1,4-Dichlorobenzene	ND		ug/l	1.0	--	1
Methyl tert butyl ether	ND		ug/l	2.0	--	1
p/m-Xylene	ND		ug/l	2.0	--	1
o-Xylene	ND		ug/l	1.0	--	1
cis-1,2-Dichloroethene	ND		ug/l	1.0	--	1
Dibromomethane	ND		ug/l	2.0	--	1
1,2,3-Trichloropropane	ND		ug/l	2.0	--	1
Styrene	ND		ug/l	1.0	--	1
Dichlorodifluoromethane	ND		ug/l	2.0	--	1
Acetone	ND		ug/l	5.0	--	1
Carbon disulfide	ND		ug/l	2.0	--	1
2-Butanone	ND		ug/l	5.0	--	1
4-Methyl-2-pentanone	ND		ug/l	5.0	--	1
2-Hexanone	ND		ug/l	5.0	--	1
Bromochloromethane	ND		ug/l	2.0	--	1
Tetrahydrofuran	ND		ug/l	10	--	1
2,2-Dichloropropane	ND		ug/l	2.0	--	1
1,2-Dibromoethane	ND		ug/l	2.0	--	1
1,3-Dichloropropane	ND		ug/l	2.0	--	1
1,1,1,2-Tetrachloroethane	ND		ug/l	1.0	--	1
Bromobenzene	ND		ug/l	2.0	--	1
n-Butylbenzene	ND		ug/l	2.0	--	1
sec-Butylbenzene	ND		ug/l	2.0	--	1
tert-Butylbenzene	ND		ug/l	2.0	--	1
o-Chlorotoluene	ND		ug/l	2.0	--	1
p-Chlorotoluene	ND		ug/l	2.0	--	1
1,2-Dibromo-3-chloropropane	ND		ug/l	2.0	--	1
Hexachlorobutadiene	ND		ug/l	0.60	--	1
Isopropylbenzene	ND		ug/l	2.0	--	1
p-Isopropyltoluene	ND		ug/l	2.0	--	1
Naphthalene	ND		ug/l	2.0	--	1
n-Propylbenzene	ND		ug/l	2.0	--	1
1,2,3-Trichlorobenzene	ND		ug/l	2.0	--	1
1,2,4-Trichlorobenzene	ND		ug/l	2.0	--	1
1,3,5-Trimethylbenzene	ND		ug/l	2.0	--	1
1,2,4-Trimethylbenzene	ND		ug/l	2.0	--	1
Ethyl ether	ND		ug/l	2.0	--	1

Project Name: CITY OF NEW BEDFORD **Lab Number:** L1016683

Project Number: 115058 **Report Date:** 10/29/10

SAMPLE RESULTS

Lab ID:	L1016683-04	Date Collected:	10/21/10 14:10
Client ID:	MW-33	Date Received:	10/22/10
Sample Location:	NBHS	Field Prep:	Not Specified

Parameter	Result	Qualifier	Units	RL	MDL	Dilution Factor
MCP Volatile Organics - Westborough Lab						
Isopropyl Ether	ND		ug/l	2.0	--	1
Ethyl-Tert-Butyl-Ether	ND		ug/l	2.0	--	1
Tertiary-Amyl Methyl Ether	ND		ug/l	2.0	--	1
1,4-Dioxane	ND		ug/l	250	--	1

Surrogate	% Recovery	Qualifier	Acceptance Criteria
1,2-Dichloroethane-d4	102		70-130
Toluene-d8	106		70-130
4-Bromofluorobenzene	103		70-130
Dibromofluoromethane	99		70-130

Project Name: CITY OF NEW BEDFORD **Lab Number:** L1016683

Project Number: 115058 **Report Date:** 10/29/10

SAMPLE RESULTS

Lab ID:	L1016683-05	Date Collected:	10/21/10 15:50
Client ID:	MW-24	Date Received:	10/22/10
Sample Location:	NBHS	Field Prep:	Not Specified
Matrix:	Water		
Analytical Method:	97,8260B		
Analytical Date:	10/29/10 00:25		
Analyst:	MM		

Parameter	Result	Qualifier	Units	RL	MDL	Dilution Factor
MCP Volatile Organics - Westborough Lab						
Methylene chloride	ND		ug/l	2.0	--	1
1,1-Dichloroethane	ND		ug/l	1.0	--	1
Chloroform	ND		ug/l	1.0	--	1
Carbon tetrachloride	ND		ug/l	1.0	--	1
1,2-Dichloropropane	ND		ug/l	1.0	--	1
Dibromochloromethane	ND		ug/l	1.0	--	1
1,1,2-Trichloroethane	ND		ug/l	1.0	--	1
Tetrachloroethene	ND		ug/l	1.0	--	1
Chlorobenzene	ND		ug/l	1.0	--	1
Trichlorofluoromethane	ND		ug/l	2.0	--	1
1,2-Dichloroethane	ND		ug/l	1.0	--	1
1,1,1-Trichloroethane	ND		ug/l	1.0	--	1
Bromodichloromethane	ND		ug/l	1.0	--	1
trans-1,3-Dichloropropene	ND		ug/l	0.50	--	1
cis-1,3-Dichloropropene	ND		ug/l	0.50	--	1
1,1-Dichloropropene	ND		ug/l	2.0	--	1
Bromoform	ND		ug/l	2.0	--	1
1,1,2,2-Tetrachloroethane	ND		ug/l	1.0	--	1
Benzene	ND		ug/l	1.0	--	1
Toluene	ND		ug/l	1.0	--	1
Ethylbenzene	ND		ug/l	1.0	--	1
Chloromethane	ND		ug/l	2.0	--	1
Bromomethane	ND		ug/l	2.0	--	1
Vinyl chloride	1.2		ug/l	1.0	--	1
Chloroethane	ND		ug/l	2.0	--	1
1,1-Dichloroethene	ND		ug/l	1.0	--	1
trans-1,2-Dichloroethene	ND		ug/l	1.0	--	1
Trichloroethene	ND		ug/l	1.0	--	1
1,2-Dichlorobenzene	ND		ug/l	1.0	--	1
1,3-Dichlorobenzene	ND		ug/l	1.0	--	1

Project Name: CITY OF NEW BEDFORD **Lab Number:** L1016683

Project Number: 115058 **Report Date:** 10/29/10

SAMPLE RESULTS

Lab ID: L1016683-05 Date Collected: 10/21/10 15:50

Client ID: MW-24 Date Received: 10/22/10

Sample Location: NBHS Field Prep: Not Specified

Parameter	Result	Qualifier	Units	RL	MDL	Dilution Factor
MCP Volatile Organics - Westborough Lab						
1,4-Dichlorobenzene	ND		ug/l	1.0	--	1
Methyl tert butyl ether	ND		ug/l	2.0	--	1
p/m-Xylene	ND		ug/l	2.0	--	1
o-Xylene	ND		ug/l	1.0	--	1
cis-1,2-Dichloroethene	ND		ug/l	1.0	--	1
Dibromomethane	ND		ug/l	2.0	--	1
1,2,3-Trichloropropane	ND		ug/l	2.0	--	1
Styrene	ND		ug/l	1.0	--	1
Dichlorodifluoromethane	ND		ug/l	2.0	--	1
Acetone	ND		ug/l	5.0	--	1
Carbon disulfide	ND		ug/l	2.0	--	1
2-Butanone	ND		ug/l	5.0	--	1
4-Methyl-2-pentanone	ND		ug/l	5.0	--	1
2-Hexanone	ND		ug/l	5.0	--	1
Bromochloromethane	ND		ug/l	2.0	--	1
Tetrahydrofuran	ND		ug/l	10	--	1
2,2-Dichloropropane	ND		ug/l	2.0	--	1
1,2-Dibromoethane	ND		ug/l	2.0	--	1
1,3-Dichloropropane	ND		ug/l	2.0	--	1
1,1,1,2-Tetrachloroethane	ND		ug/l	1.0	--	1
Bromobenzene	ND		ug/l	2.0	--	1
n-Butylbenzene	ND		ug/l	2.0	--	1
sec-Butylbenzene	ND		ug/l	2.0	--	1
tert-Butylbenzene	ND		ug/l	2.0	--	1
o-Chlorotoluene	ND		ug/l	2.0	--	1
p-Chlorotoluene	ND		ug/l	2.0	--	1
1,2-Dibromo-3-chloropropane	ND		ug/l	2.0	--	1
Hexachlorobutadiene	ND		ug/l	0.60	--	1
Isopropylbenzene	ND		ug/l	2.0	--	1
p-Isopropyltoluene	ND		ug/l	2.0	--	1
Naphthalene	ND		ug/l	2.0	--	1
n-Propylbenzene	ND		ug/l	2.0	--	1
1,2,3-Trichlorobenzene	ND		ug/l	2.0	--	1
1,2,4-Trichlorobenzene	ND		ug/l	2.0	--	1
1,3,5-Trimethylbenzene	ND		ug/l	2.0	--	1
1,2,4-Trimethylbenzene	ND		ug/l	2.0	--	1
Ethyl ether	ND		ug/l	2.0	--	1

Project Name: CITY OF NEW BEDFORD **Lab Number:** L1016683

Project Number: 115058 **Report Date:** 10/29/10

SAMPLE RESULTS

Lab ID:	L1016683-05	Date Collected:	10/21/10 15:50
Client ID:	MW-24	Date Received:	10/22/10
Sample Location:	NBHS	Field Prep:	Not Specified

Parameter	Result	Qualifier	Units	RL	MDL	Dilution Factor
MCP Volatile Organics - Westborough Lab						
Isopropyl Ether	ND		ug/l	2.0	--	1
Ethyl-Tert-Butyl-Ether	ND		ug/l	2.0	--	1
Tertiary-Amyl Methyl Ether	ND		ug/l	2.0	--	1
1,4-Dioxane	ND		ug/l	250	--	1

Surrogate	% Recovery	Qualifier	Acceptance Criteria
1,2-Dichloroethane-d4	107		70-130
Toluene-d8	103		70-130
4-Bromofluorobenzene	102		70-130
Dibromofluoromethane	98		70-130

Project Name: CITY OF NEW BEDFORD **Lab Number:** L1016683

Project Number: 115058 **Report Date:** 10/29/10

SAMPLE RESULTS

Lab ID:	L1016683-06	D	Date Collected:	10/21/10 16:05
Client ID:	MW-27		Date Received:	10/22/10
Sample Location:	NBHS		Field Prep:	Not Specified
Matrix:	Water			
Analytical Method:	97,8260B			
Analytical Date:	10/29/10 10:07			
Analyst:	MM			

Parameter	Result	Qualifier	Units	RL	MDL	Dilution Factor
MCP Volatile Organics - Westborough Lab						
Methylene chloride	ND		ug/l	200	--	100
1,1-Dichloroethane	ND		ug/l	100	--	100
Chloroform	ND		ug/l	100	--	100
Carbon tetrachloride	ND		ug/l	100	--	100
1,2-Dichloropropane	ND		ug/l	100	--	100
Dibromochloromethane	ND		ug/l	100	--	100
1,1,2-Trichloroethane	ND		ug/l	100	--	100
Tetrachloroethene	ND		ug/l	100	--	100
Chlorobenzene	ND		ug/l	100	--	100
Trichlorofluoromethane	ND		ug/l	200	--	100
1,2-Dichloroethane	ND		ug/l	100	--	100
1,1,1-Trichloroethane	ND		ug/l	100	--	100
Bromodichloromethane	ND		ug/l	100	--	100
trans-1,3-Dichloropropene	ND		ug/l	50	--	100
cis-1,3-Dichloropropene	ND		ug/l	50	--	100
1,1-Dichloropropene	ND		ug/l	200	--	100
Bromoform	ND		ug/l	200	--	100
1,1,2,2-Tetrachloroethane	ND		ug/l	100	--	100
Benzene	ND		ug/l	100	--	100
Toluene	ND		ug/l	100	--	100
Ethylbenzene	ND		ug/l	100	--	100
Chloromethane	ND		ug/l	200	--	100
Bromomethane	ND		ug/l	200	--	100
Vinyl chloride	ND		ug/l	100	--	100
Chloroethane	ND		ug/l	200	--	100
1,1-Dichloroethene	ND		ug/l	100	--	100
trans-1,2-Dichloroethene	ND		ug/l	100	--	100
Trichloroethene	4500		ug/l	100	--	100
1,2-Dichlorobenzene	ND		ug/l	100	--	100
1,3-Dichlorobenzene	ND		ug/l	100	--	100

Project Name: CITY OF NEW BEDFORD **Lab Number:** L1016683

Project Number: 115058 **Report Date:** 10/29/10

SAMPLE RESULTS

Lab ID: L1016683-06 D Date Collected: 10/21/10 16:05

Client ID: MW-27 Date Received: 10/22/10

Sample Location: NBHS Field Prep: Not Specified

Parameter	Result	Qualifier	Units	RL	MDL	Dilution Factor
MCP Volatile Organics - Westborough Lab						
1,4-Dichlorobenzene	ND		ug/l	100	--	100
Methyl tert butyl ether	ND		ug/l	200	--	100
p/m-Xylene	ND		ug/l	200	--	100
o-Xylene	ND		ug/l	100	--	100
cis-1,2-Dichloroethene	290		ug/l	100	--	100
Dibromomethane	ND		ug/l	200	--	100
1,2,3-Trichloropropane	ND		ug/l	200	--	100
Styrene	ND		ug/l	100	--	100
Dichlorodifluoromethane	ND		ug/l	200	--	100
Acetone	ND		ug/l	500	--	100
Carbon disulfide	ND		ug/l	200	--	100
2-Butanone	ND		ug/l	500	--	100
4-Methyl-2-pentanone	ND		ug/l	500	--	100
2-Hexanone	ND		ug/l	500	--	100
Bromochloromethane	ND		ug/l	200	--	100
Tetrahydrofuran	ND		ug/l	1000	--	100
2,2-Dichloropropane	ND		ug/l	200	--	100
1,2-Dibromoethane	ND		ug/l	200	--	100
1,3-Dichloropropane	ND		ug/l	200	--	100
1,1,1,2-Tetrachloroethane	ND		ug/l	100	--	100
Bromobenzene	ND		ug/l	200	--	100
n-Butylbenzene	ND		ug/l	200	--	100
sec-Butylbenzene	ND		ug/l	200	--	100
tert-Butylbenzene	ND		ug/l	200	--	100
o-Chlorotoluene	ND		ug/l	200	--	100
p-Chlorotoluene	ND		ug/l	200	--	100
1,2-Dibromo-3-chloropropane	ND		ug/l	200	--	100
Hexachlorobutadiene	ND		ug/l	60	--	100
Isopropylbenzene	ND		ug/l	200	--	100
p-Isopropyltoluene	ND		ug/l	200	--	100
Naphthalene	ND		ug/l	200	--	100
n-Propylbenzene	ND		ug/l	200	--	100
1,2,3-Trichlorobenzene	ND		ug/l	200	--	100
1,2,4-Trichlorobenzene	ND		ug/l	200	--	100
1,3,5-Trimethylbenzene	ND		ug/l	200	--	100
1,2,4-Trimethylbenzene	ND		ug/l	200	--	100
Ethyl ether	ND		ug/l	200	--	100

Project Name: CITY OF NEW BEDFORD **Lab Number:** L1016683

Project Number: 115058 **Report Date:** 10/29/10

SAMPLE RESULTS

Lab ID:	L1016683-06	D	Date Collected:	10/21/10 16:05
Client ID:	MW-27		Date Received:	10/22/10
Sample Location:	NBHS		Field Prep:	Not Specified

Parameter	Result	Qualifier	Units	RL	MDL	Dilution Factor
MCP Volatile Organics - Westborough Lab						
Isopropyl Ether	ND		ug/l	200	--	100
Ethyl-Tert-Butyl-Ether	ND		ug/l	200	--	100
Tertiary-Amyl Methyl Ether	ND		ug/l	200	--	100
1,4-Dioxane	ND		ug/l	25000	--	100

Surrogate	% Recovery	Qualifier	Acceptance Criteria
1,2-Dichloroethane-d4	99		70-130
Toluene-d8	105		70-130
4-Bromofluorobenzene	101		70-130
Dibromofluoromethane	95		70-130

Project Name: CITY OF NEW BEDFORD **Lab Number:** L1016683

Project Number: 115058 **Report Date:** 10/29/10

SAMPLE RESULTS

Lab ID:	L1016683-07	Date Collected:	10/21/10 16:50
Client ID:	D-1-24	Date Received:	10/22/10
Sample Location:	NBHS	Field Prep:	Not Specified
Matrix:	Water		
Analytical Method:	97,8260B		
Analytical Date:	10/29/10 00:57		
Analyst:	MM		

Parameter	Result	Qualifier	Units	RL	MDL	Dilution Factor
MCP Volatile Organics - Westborough Lab						
Methylene chloride	ND		ug/l	2.0	--	1
1,1-Dichloroethane	ND		ug/l	1.0	--	1
Chloroform	ND		ug/l	1.0	--	1
Carbon tetrachloride	ND		ug/l	1.0	--	1
1,2-Dichloropropane	ND		ug/l	1.0	--	1
Dibromochloromethane	ND		ug/l	1.0	--	1
1,1,2-Trichloroethane	ND		ug/l	1.0	--	1
Tetrachloroethene	ND		ug/l	1.0	--	1
Chlorobenzene	ND		ug/l	1.0	--	1
Trichlorofluoromethane	ND		ug/l	2.0	--	1
1,2-Dichloroethane	ND		ug/l	1.0	--	1
1,1,1-Trichloroethane	ND		ug/l	1.0	--	1
Bromodichloromethane	ND		ug/l	1.0	--	1
trans-1,3-Dichloropropene	ND		ug/l	0.50	--	1
cis-1,3-Dichloropropene	ND		ug/l	0.50	--	1
1,1-Dichloropropene	ND		ug/l	2.0	--	1
Bromoform	ND		ug/l	2.0	--	1
1,1,2,2-Tetrachloroethane	ND		ug/l	1.0	--	1
Benzene	ND		ug/l	1.0	--	1
Toluene	ND		ug/l	1.0	--	1
Ethylbenzene	ND		ug/l	1.0	--	1
Chloromethane	ND		ug/l	2.0	--	1
Bromomethane	ND		ug/l	2.0	--	1
Vinyl chloride	1.2		ug/l	1.0	--	1
Chloroethane	ND		ug/l	2.0	--	1
1,1-Dichloroethene	ND		ug/l	1.0	--	1
trans-1,2-Dichloroethene	ND		ug/l	1.0	--	1
Trichloroethene	ND		ug/l	1.0	--	1
1,2-Dichlorobenzene	ND		ug/l	1.0	--	1
1,3-Dichlorobenzene	ND		ug/l	1.0	--	1

Project Name: CITY OF NEW BEDFORD **Lab Number:** L1016683

Project Number: 115058 **Report Date:** 10/29/10

SAMPLE RESULTS

Lab ID: L1016683-07 Date Collected: 10/21/10 16:50

Client ID: D-1-24 Date Received: 10/22/10

Sample Location: NBHS Field Prep: Not Specified

Parameter	Result	Qualifier	Units	RL	MDL	Dilution Factor
MCP Volatile Organics - Westborough Lab						
1,4-Dichlorobenzene	ND		ug/l	1.0	--	1
Methyl tert butyl ether	ND		ug/l	2.0	--	1
p/m-Xylene	ND		ug/l	2.0	--	1
o-Xylene	ND		ug/l	1.0	--	1
cis-1,2-Dichloroethene	ND		ug/l	1.0	--	1
Dibromomethane	ND		ug/l	2.0	--	1
1,2,3-Trichloropropane	ND		ug/l	2.0	--	1
Styrene	ND		ug/l	1.0	--	1
Dichlorodifluoromethane	ND		ug/l	2.0	--	1
Acetone	ND		ug/l	5.0	--	1
Carbon disulfide	ND		ug/l	2.0	--	1
2-Butanone	ND		ug/l	5.0	--	1
4-Methyl-2-pentanone	ND		ug/l	5.0	--	1
2-Hexanone	ND		ug/l	5.0	--	1
Bromochloromethane	ND		ug/l	2.0	--	1
Tetrahydrofuran	ND		ug/l	10	--	1
2,2-Dichloropropane	ND		ug/l	2.0	--	1
1,2-Dibromoethane	ND		ug/l	2.0	--	1
1,3-Dichloropropane	ND		ug/l	2.0	--	1
1,1,1,2-Tetrachloroethane	ND		ug/l	1.0	--	1
Bromobenzene	ND		ug/l	2.0	--	1
n-Butylbenzene	ND		ug/l	2.0	--	1
sec-Butylbenzene	ND		ug/l	2.0	--	1
tert-Butylbenzene	ND		ug/l	2.0	--	1
o-Chlorotoluene	ND		ug/l	2.0	--	1
p-Chlorotoluene	ND		ug/l	2.0	--	1
1,2-Dibromo-3-chloropropane	ND		ug/l	2.0	--	1
Hexachlorobutadiene	ND		ug/l	0.60	--	1
Isopropylbenzene	ND		ug/l	2.0	--	1
p-Isopropyltoluene	ND		ug/l	2.0	--	1
Naphthalene	ND		ug/l	2.0	--	1
n-Propylbenzene	ND		ug/l	2.0	--	1
1,2,3-Trichlorobenzene	ND		ug/l	2.0	--	1
1,2,4-Trichlorobenzene	ND		ug/l	2.0	--	1
1,3,5-Trimethylbenzene	ND		ug/l	2.0	--	1
1,2,4-Trimethylbenzene	ND		ug/l	2.0	--	1
Ethyl ether	ND		ug/l	2.0	--	1

Project Name: CITY OF NEW BEDFORD **Lab Number:** L1016683

Project Number: 115058 **Report Date:** 10/29/10

SAMPLE RESULTS

Lab ID:	L1016683-07	Date Collected:	10/21/10 16:50
Client ID:	D-1-24	Date Received:	10/22/10
Sample Location:	NBHS	Field Prep:	Not Specified

Parameter	Result	Qualifier	Units	RL	MDL	Dilution Factor
MCP Volatile Organics - Westborough Lab						
Isopropyl Ether	ND		ug/l	2.0	--	1
Ethyl-Tert-Butyl-Ether	ND		ug/l	2.0	--	1
Tertiary-Amyl Methyl Ether	ND		ug/l	2.0	--	1
1,4-Dioxane	ND		ug/l	250	--	1

Surrogate	% Recovery	Qualifier	Acceptance Criteria
1,2-Dichloroethane-d4	105		70-130
Toluene-d8	103		70-130
4-Bromofluorobenzene	102		70-130
Dibromofluoromethane	100		70-130

Project Name: CITY OF NEW BEDFORD **Lab Number:** L1016683

Project Number: 115058 **Report Date:** 10/29/10

SAMPLE RESULTS

Lab ID:	L1016683-08	Date Collected:	10/22/10 09:50
Client ID:	MW-30	Date Received:	10/22/10
Sample Location:	NBHS	Field Prep:	Not Specified
Matrix:	Water		
Analytical Method:	97,8260B		
Analytical Date:	10/29/10 12:44		
Analyst:	MM		

Parameter	Result	Qualifier	Units	RL	MDL	Dilution Factor
MCP Volatile Organics - Westborough Lab						
Methylene chloride	ND		ug/l	2.0	--	1
1,1-Dichloroethane	ND		ug/l	1.0	--	1
Chloroform	ND		ug/l	1.0	--	1
Carbon tetrachloride	ND		ug/l	1.0	--	1
1,2-Dichloropropane	ND		ug/l	1.0	--	1
Dibromochloromethane	ND		ug/l	1.0	--	1
1,1,2-Trichloroethane	ND		ug/l	1.0	--	1
Tetrachloroethene	ND		ug/l	1.0	--	1
Chlorobenzene	ND		ug/l	1.0	--	1
Trichlorofluoromethane	ND		ug/l	2.0	--	1
1,2-Dichloroethane	ND		ug/l	1.0	--	1
1,1,1-Trichloroethane	ND		ug/l	1.0	--	1
Bromodichloromethane	ND		ug/l	1.0	--	1
trans-1,3-Dichloropropene	ND		ug/l	0.50	--	1
cis-1,3-Dichloropropene	ND		ug/l	0.50	--	1
1,1-Dichloropropene	ND		ug/l	2.0	--	1
Bromoform	ND		ug/l	2.0	--	1
1,1,2,2-Tetrachloroethane	ND		ug/l	1.0	--	1
Benzene	ND		ug/l	1.0	--	1
Toluene	ND		ug/l	1.0	--	1
Ethylbenzene	ND		ug/l	1.0	--	1
Chloromethane	ND		ug/l	2.0	--	1
Bromomethane	ND		ug/l	2.0	--	1
Vinyl chloride	ND		ug/l	1.0	--	1
Chloroethane	ND		ug/l	2.0	--	1
1,1-Dichloroethene	ND		ug/l	1.0	--	1
trans-1,2-Dichloroethene	ND		ug/l	1.0	--	1
Trichloroethene	ND		ug/l	1.0	--	1
1,2-Dichlorobenzene	ND		ug/l	1.0	--	1
1,3-Dichlorobenzene	ND		ug/l	1.0	--	1

Project Name: CITY OF NEW BEDFORD **Lab Number:** L1016683

Project Number: 115058 **Report Date:** 10/29/10

SAMPLE RESULTS

Lab ID: L1016683-08 Date Collected: 10/22/10 09:50

Client ID: MW-30 Date Received: 10/22/10

Sample Location: NBHS Field Prep: Not Specified

Parameter	Result	Qualifier	Units	RL	MDL	Dilution Factor
MCP Volatile Organics - Westborough Lab						
1,4-Dichlorobenzene	ND		ug/l	1.0	--	1
Methyl tert butyl ether	ND		ug/l	2.0	--	1
p/m-Xylene	ND		ug/l	2.0	--	1
o-Xylene	ND		ug/l	1.0	--	1
cis-1,2-Dichloroethene	ND		ug/l	1.0	--	1
Dibromomethane	ND		ug/l	2.0	--	1
1,2,3-Trichloropropane	ND		ug/l	2.0	--	1
Styrene	ND		ug/l	1.0	--	1
Dichlorodifluoromethane	ND		ug/l	2.0	--	1
Acetone	ND		ug/l	5.0	--	1
Carbon disulfide	ND		ug/l	2.0	--	1
2-Butanone	ND		ug/l	5.0	--	1
4-Methyl-2-pentanone	ND		ug/l	5.0	--	1
2-Hexanone	ND		ug/l	5.0	--	1
Bromochloromethane	ND		ug/l	2.0	--	1
Tetrahydrofuran	ND		ug/l	10	--	1
2,2-Dichloropropane	ND		ug/l	2.0	--	1
1,2-Dibromoethane	ND		ug/l	2.0	--	1
1,3-Dichloropropane	ND		ug/l	2.0	--	1
1,1,1,2-Tetrachloroethane	ND		ug/l	1.0	--	1
Bromobenzene	ND		ug/l	2.0	--	1
n-Butylbenzene	ND		ug/l	2.0	--	1
sec-Butylbenzene	ND		ug/l	2.0	--	1
tert-Butylbenzene	ND		ug/l	2.0	--	1
o-Chlorotoluene	ND		ug/l	2.0	--	1
p-Chlorotoluene	ND		ug/l	2.0	--	1
1,2-Dibromo-3-chloropropane	ND		ug/l	2.0	--	1
Hexachlorobutadiene	ND		ug/l	0.60	--	1
Isopropylbenzene	ND		ug/l	2.0	--	1
p-Isopropyltoluene	ND		ug/l	2.0	--	1
Naphthalene	ND		ug/l	2.0	--	1
n-Propylbenzene	ND		ug/l	2.0	--	1
1,2,3-Trichlorobenzene	ND		ug/l	2.0	--	1
1,2,4-Trichlorobenzene	ND		ug/l	2.0	--	1
1,3,5-Trimethylbenzene	ND		ug/l	2.0	--	1
1,2,4-Trimethylbenzene	ND		ug/l	2.0	--	1
Ethyl ether	ND		ug/l	2.0	--	1

Project Name: CITY OF NEW BEDFORD **Lab Number:** L1016683

Project Number: 115058 **Report Date:** 10/29/10

SAMPLE RESULTS

Lab ID:	L1016683-08	Date Collected:	10/22/10 09:50
Client ID:	MW-30	Date Received:	10/22/10
Sample Location:	NBHS	Field Prep:	Not Specified

Parameter	Result	Qualifier	Units	RL	MDL	Dilution Factor
MCP Volatile Organics - Westborough Lab						
Isopropyl Ether	ND		ug/l	2.0	--	1
Ethyl-Tert-Butyl-Ether	ND		ug/l	2.0	--	1
Tertiary-Amyl Methyl Ether	ND		ug/l	2.0	--	1
1,4-Dioxane	ND		ug/l	250	--	1

Surrogate	% Recovery	Qualifier	Acceptance Criteria
1,2-Dichloroethane-d4	106		70-130
Toluene-d8	102		70-130
4-Bromofluorobenzene	103		70-130
Dibromofluoromethane	98		70-130

Project Name: CITY OF NEW BEDFORD **Lab Number:** L1016683

Project Number: 115058 **Report Date:** 10/29/10

SAMPLE RESULTS

Lab ID:	L1016683-09	Date Collected:	10/22/10 10:20
Client ID:	MW-7	Date Received:	10/22/10
Sample Location:	NBHS	Field Prep:	Not Specified
Matrix:	Water		
Analytical Method:	97,8260B		
Analytical Date:	10/29/10 01:28		
Analyst:	MM		

Parameter	Result	Qualifier	Units	RL	MDL	Dilution Factor
MCP Volatile Organics - Westborough Lab						
Methylene chloride	ND		ug/l	2.0	--	1
1,1-Dichloroethane	ND		ug/l	1.0	--	1
Chloroform	ND		ug/l	1.0	--	1
Carbon tetrachloride	ND		ug/l	1.0	--	1
1,2-Dichloropropane	ND		ug/l	1.0	--	1
Dibromochloromethane	ND		ug/l	1.0	--	1
1,1,2-Trichloroethane	ND		ug/l	1.0	--	1
Tetrachloroethene	26		ug/l	1.0	--	1
Chlorobenzene	ND		ug/l	1.0	--	1
Trichlorofluoromethane	ND		ug/l	2.0	--	1
1,2-Dichloroethane	ND		ug/l	1.0	--	1
1,1,1-Trichloroethane	ND		ug/l	1.0	--	1
Bromodichloromethane	ND		ug/l	1.0	--	1
trans-1,3-Dichloropropene	ND		ug/l	0.50	--	1
cis-1,3-Dichloropropene	ND		ug/l	0.50	--	1
1,1-Dichloropropene	ND		ug/l	2.0	--	1
Bromoform	ND		ug/l	2.0	--	1
1,1,2,2-Tetrachloroethane	ND		ug/l	1.0	--	1
Benzene	ND		ug/l	1.0	--	1
Toluene	ND		ug/l	1.0	--	1
Ethylbenzene	ND		ug/l	1.0	--	1
Chloromethane	ND		ug/l	2.0	--	1
Bromomethane	ND		ug/l	2.0	--	1
Vinyl chloride	3.7		ug/l	1.0	--	1
Chloroethane	ND		ug/l	2.0	--	1
1,1-Dichloroethene	ND		ug/l	1.0	--	1
trans-1,2-Dichloroethene	ND		ug/l	1.0	--	1
Trichloroethene	ND		ug/l	1.0	--	1
1,2-Dichlorobenzene	ND		ug/l	1.0	--	1
1,3-Dichlorobenzene	ND		ug/l	1.0	--	1

Project Name: CITY OF NEW BEDFORD **Lab Number:** L1016683

Project Number: 115058 **Report Date:** 10/29/10

SAMPLE RESULTS

Lab ID: L1016683-09 Date Collected: 10/22/10 10:20

Client ID: MW-7 Date Received: 10/22/10

Sample Location: NBHS Field Prep: Not Specified

Parameter	Result	Qualifier	Units	RL	MDL	Dilution Factor
MCP Volatile Organics - Westborough Lab						
1,4-Dichlorobenzene	ND		ug/l	1.0	--	1
Methyl tert butyl ether	ND		ug/l	2.0	--	1
p/m-Xylene	ND		ug/l	2.0	--	1
o-Xylene	ND		ug/l	1.0	--	1
cis-1,2-Dichloroethene	49		ug/l	1.0	--	1
Dibromomethane	ND		ug/l	2.0	--	1
1,2,3-Trichloropropane	ND		ug/l	2.0	--	1
Styrene	ND		ug/l	1.0	--	1
Dichlorodifluoromethane	ND		ug/l	2.0	--	1
Acetone	ND		ug/l	5.0	--	1
Carbon disulfide	ND		ug/l	2.0	--	1
2-Butanone	ND		ug/l	5.0	--	1
4-Methyl-2-pentanone	ND		ug/l	5.0	--	1
2-Hexanone	ND		ug/l	5.0	--	1
Bromochloromethane	ND		ug/l	2.0	--	1
Tetrahydrofuran	ND		ug/l	10	--	1
2,2-Dichloropropane	ND		ug/l	2.0	--	1
1,2-Dibromoethane	ND		ug/l	2.0	--	1
1,3-Dichloropropane	ND		ug/l	2.0	--	1
1,1,1,2-Tetrachloroethane	ND		ug/l	1.0	--	1
Bromobenzene	ND		ug/l	2.0	--	1
n-Butylbenzene	ND		ug/l	2.0	--	1
sec-Butylbenzene	ND		ug/l	2.0	--	1
tert-Butylbenzene	ND		ug/l	2.0	--	1
o-Chlorotoluene	ND		ug/l	2.0	--	1
p-Chlorotoluene	ND		ug/l	2.0	--	1
1,2-Dibromo-3-chloropropane	ND		ug/l	2.0	--	1
Hexachlorobutadiene	ND		ug/l	0.60	--	1
Isopropylbenzene	ND		ug/l	2.0	--	1
p-Isopropyltoluene	ND		ug/l	2.0	--	1
Naphthalene	ND		ug/l	2.0	--	1
n-Propylbenzene	ND		ug/l	2.0	--	1
1,2,3-Trichlorobenzene	ND		ug/l	2.0	--	1
1,2,4-Trichlorobenzene	ND		ug/l	2.0	--	1
1,3,5-Trimethylbenzene	ND		ug/l	2.0	--	1
1,2,4-Trimethylbenzene	ND		ug/l	2.0	--	1
Ethyl ether	ND		ug/l	2.0	--	1

Project Name: CITY OF NEW BEDFORD **Lab Number:** L1016683

Project Number: 115058 **Report Date:** 10/29/10

SAMPLE RESULTS

Lab ID:	L1016683-09	Date Collected:	10/22/10 10:20
Client ID:	MW-7	Date Received:	10/22/10
Sample Location:	NBHS	Field Prep:	Not Specified

Parameter	Result	Qualifier	Units	RL	MDL	Dilution Factor
MCP Volatile Organics - Westborough Lab						
Isopropyl Ether	ND		ug/l	2.0	--	1
Ethyl-Tert-Butyl-Ether	ND		ug/l	2.0	--	1
Tertiary-Amyl Methyl Ether	ND		ug/l	2.0	--	1
1,4-Dioxane	ND		ug/l	250	--	1

Surrogate	% Recovery	Qualifier	Acceptance Criteria
1,2-Dichloroethane-d4	106		70-130
Toluene-d8	102		70-130
4-Bromofluorobenzene	100		70-130
Dibromofluoromethane	102		70-130

Project Name: CITY OF NEW BEDFORD **Lab Number:** L1016683

Project Number: 115058 **Report Date:** 10/29/10

SAMPLE RESULTS

Lab ID:	L1016683-10	Date Collected:	10/21/10 00:00
Client ID:	TRIP BLANK	Date Received:	10/22/10
Sample Location:	NBHS	Field Prep:	Not Specified
Matrix:	Water		
Analytical Method:	97,8260B		
Analytical Date:	10/29/10 02:00		
Analyst:	MM		

Parameter	Result	Qualifier	Units	RL	MDL	Dilution Factor
MCP Volatile Organics - Westborough Lab						
Methylene chloride	ND		ug/l	2.0	--	1
1,1-Dichloroethane	ND		ug/l	1.0	--	1
Chloroform	ND		ug/l	1.0	--	1
Carbon tetrachloride	ND		ug/l	1.0	--	1
1,2-Dichloropropane	ND		ug/l	1.0	--	1
Dibromochloromethane	ND		ug/l	1.0	--	1
1,1,2-Trichloroethane	ND		ug/l	1.0	--	1
Tetrachloroethene	ND		ug/l	1.0	--	1
Chlorobenzene	ND		ug/l	1.0	--	1
Trichlorofluoromethane	ND		ug/l	2.0	--	1
1,2-Dichloroethane	ND		ug/l	1.0	--	1
1,1,1-Trichloroethane	ND		ug/l	1.0	--	1
Bromodichloromethane	ND		ug/l	1.0	--	1
trans-1,3-Dichloropropene	ND		ug/l	0.50	--	1
cis-1,3-Dichloropropene	ND		ug/l	0.50	--	1
1,1-Dichloropropene	ND		ug/l	2.0	--	1
Bromoform	ND		ug/l	2.0	--	1
1,1,2,2-Tetrachloroethane	ND		ug/l	1.0	--	1
Benzene	ND		ug/l	1.0	--	1
Toluene	ND		ug/l	1.0	--	1
Ethylbenzene	ND		ug/l	1.0	--	1
Chloromethane	ND		ug/l	2.0	--	1
Bromomethane	ND		ug/l	2.0	--	1
Vinyl chloride	ND		ug/l	1.0	--	1
Chloroethane	ND		ug/l	2.0	--	1
1,1-Dichloroethene	ND		ug/l	1.0	--	1
trans-1,2-Dichloroethene	ND		ug/l	1.0	--	1
Trichloroethene	ND		ug/l	1.0	--	1
1,2-Dichlorobenzene	ND		ug/l	1.0	--	1
1,3-Dichlorobenzene	ND		ug/l	1.0	--	1

Project Name: CITY OF NEW BEDFORD **Lab Number:** L1016683

Project Number: 115058 **Report Date:** 10/29/10

SAMPLE RESULTS

Lab ID: L1016683-10 Date Collected: 10/21/10 00:00

Client ID: TRIP BLANK Date Received: 10/22/10

Sample Location: NBHS Field Prep: Not Specified

Parameter	Result	Qualifier	Units	RL	MDL	Dilution Factor
MCP Volatile Organics - Westborough Lab						
1,4-Dichlorobenzene	ND		ug/l	1.0	--	1
Methyl tert butyl ether	ND		ug/l	2.0	--	1
p/m-Xylene	ND		ug/l	2.0	--	1
o-Xylene	ND		ug/l	1.0	--	1
cis-1,2-Dichloroethene	ND		ug/l	1.0	--	1
Dibromomethane	ND		ug/l	2.0	--	1
1,2,3-Trichloropropane	ND		ug/l	2.0	--	1
Styrene	ND		ug/l	1.0	--	1
Dichlorodifluoromethane	ND		ug/l	2.0	--	1
Acetone	ND		ug/l	5.0	--	1
Carbon disulfide	ND		ug/l	2.0	--	1
2-Butanone	ND		ug/l	5.0	--	1
4-Methyl-2-pentanone	ND		ug/l	5.0	--	1
2-Hexanone	ND		ug/l	5.0	--	1
Bromochloromethane	ND		ug/l	2.0	--	1
Tetrahydrofuran	ND		ug/l	10	--	1
2,2-Dichloropropane	ND		ug/l	2.0	--	1
1,2-Dibromoethane	ND		ug/l	2.0	--	1
1,3-Dichloropropane	ND		ug/l	2.0	--	1
1,1,1,2-Tetrachloroethane	ND		ug/l	1.0	--	1
Bromobenzene	ND		ug/l	2.0	--	1
n-Butylbenzene	ND		ug/l	2.0	--	1
sec-Butylbenzene	ND		ug/l	2.0	--	1
tert-Butylbenzene	ND		ug/l	2.0	--	1
o-Chlorotoluene	ND		ug/l	2.0	--	1
p-Chlorotoluene	ND		ug/l	2.0	--	1
1,2-Dibromo-3-chloropropane	ND		ug/l	2.0	--	1
Hexachlorobutadiene	ND		ug/l	0.60	--	1
Isopropylbenzene	ND		ug/l	2.0	--	1
p-Isopropyltoluene	ND		ug/l	2.0	--	1
Naphthalene	ND		ug/l	2.0	--	1
n-Propylbenzene	ND		ug/l	2.0	--	1
1,2,3-Trichlorobenzene	ND		ug/l	2.0	--	1
1,2,4-Trichlorobenzene	ND		ug/l	2.0	--	1
1,3,5-Trimethylbenzene	ND		ug/l	2.0	--	1
1,2,4-Trimethylbenzene	ND		ug/l	2.0	--	1
Ethyl ether	ND		ug/l	2.0	--	1

Project Name: CITY OF NEW BEDFORD **Lab Number:** L1016683

Project Number: 115058 **Report Date:** 10/29/10

SAMPLE RESULTS

Lab ID:	L1016683-10	Date Collected:	10/21/10 00:00
Client ID:	TRIP BLANK	Date Received:	10/22/10
Sample Location:	NBHS	Field Prep:	Not Specified

Parameter	Result	Qualifier	Units	RL	MDL	Dilution Factor
MCP Volatile Organics - Westborough Lab						
Isopropyl Ether	ND		ug/l	2.0	--	1
Ethyl-Tert-Butyl-Ether	ND		ug/l	2.0	--	1
Tertiary-Amyl Methyl Ether	ND		ug/l	2.0	--	1
1,4-Dioxane	ND		ug/l	250	--	1

Surrogate	% Recovery	Qualifier	Acceptance Criteria
1,2-Dichloroethane-d4	105		70-130
Toluene-d8	105		70-130
4-Bromofluorobenzene	104		70-130
Dibromofluoromethane	103		70-130

Project Name: CITY OF NEW BEDFORD **Lab Number:** L1016683

Project Number: 115058 **Report Date:** 10/29/10

Method Blank Analysis
Batch Quality Control

Analytical Method: 97,8260B
Analytical Date: 10/28/10 17:34
Analyst: MM

Parameter	Result	Qualifier	Units	RL	MDL
MCP Volatile Organics - Westborough Lab for sample(s): 02,05,07,09-10 Batch: WG440140-3					
Methylene chloride	ND		ug/l	2.0	--
1,1-Dichloroethane	ND		ug/l	1.0	--
Chloroform	ND		ug/l	1.0	--
Carbon tetrachloride	ND		ug/l	1.0	--
1,2-Dichloropropane	ND		ug/l	1.0	--
Dibromochloromethane	ND		ug/l	1.0	--
1,1,2-Trichloroethane	ND		ug/l	1.0	--
Tetrachloroethene	ND		ug/l	1.0	--
Chlorobenzene	ND		ug/l	1.0	--
Trichlorofluoromethane	ND		ug/l	2.0	--
1,2-Dichloroethane	ND		ug/l	1.0	--
1,1,1-Trichloroethane	ND		ug/l	1.0	--
Bromodichloromethane	ND		ug/l	1.0	--
trans-1,3-Dichloropropene	ND		ug/l	0.50	--
cis-1,3-Dichloropropene	ND		ug/l	0.50	--
1,1-Dichloropropene	ND		ug/l	2.0	--
Bromoform	ND		ug/l	2.0	--
1,1,2,2-Tetrachloroethane	ND		ug/l	1.0	--
Benzene	ND		ug/l	1.0	--
Toluene	ND		ug/l	1.0	--
Ethylbenzene	ND		ug/l	1.0	--
Chloromethane	ND		ug/l	2.0	--
Bromomethane	ND		ug/l	2.0	--
Vinyl chloride	ND		ug/l	1.0	--
Chloroethane	ND		ug/l	2.0	--
1,1-Dichloroethene	ND		ug/l	1.0	--
trans-1,2-Dichloroethene	ND		ug/l	1.0	--
Trichloroethene	ND		ug/l	1.0	--
1,2-Dichlorobenzene	ND		ug/l	1.0	--
1,3-Dichlorobenzene	ND		ug/l	1.0	--
1,4-Dichlorobenzene	ND		ug/l	1.0	--

Project Name: CITY OF NEW BEDFORD **Lab Number:** L1016683

Project Number: 115058 **Report Date:** 10/29/10

Method Blank Analysis
Batch Quality Control

Analytical Method: 97,8260B
Analytical Date: 10/28/10 17:34
Analyst: MM

Parameter	Result	Qualifier	Units	RL	MDL
MCP Volatile Organics - Westborough Lab for sample(s): 02,05,07,09-10 Batch: WG440140-3					
Methyl tert butyl ether	ND		ug/l	2.0	--
p/m-Xylene	ND		ug/l	2.0	--
o-Xylene	ND		ug/l	1.0	--
cis-1,2-Dichloroethene	ND		ug/l	1.0	--
Dibromomethane	ND		ug/l	2.0	--
1,2,3-Trichloropropane	ND		ug/l	2.0	--
Styrene	ND		ug/l	1.0	--
Dichlorodifluoromethane	ND		ug/l	2.0	--
Acetone	ND		ug/l	5.0	--
Carbon disulfide	ND		ug/l	2.0	--
2-Butanone	ND		ug/l	5.0	--
4-Methyl-2-pentanone	ND		ug/l	5.0	--
2-Hexanone	ND		ug/l	5.0	--
Bromochloromethane	ND		ug/l	2.0	--
Tetrahydrofuran	ND		ug/l	10	--
2,2-Dichloropropane	ND		ug/l	2.0	--
1,2-Dibromoethane	ND		ug/l	2.0	--
1,3-Dichloropropane	ND		ug/l	2.0	--
1,1,1,2-Tetrachloroethane	ND		ug/l	1.0	--
Bromobenzene	ND		ug/l	2.0	--
n-Butylbenzene	ND		ug/l	2.0	--
sec-Butylbenzene	ND		ug/l	2.0	--
tert-Butylbenzene	ND		ug/l	2.0	--
o-Chlorotoluene	ND		ug/l	2.0	--
p-Chlorotoluene	ND		ug/l	2.0	--
1,2-Dibromo-3-chloropropane	ND		ug/l	2.0	--
Hexachlorobutadiene	ND		ug/l	0.60	--
Isopropylbenzene	ND		ug/l	2.0	--
p-Isopropyltoluene	ND		ug/l	2.0	--
Naphthalene	ND		ug/l	2.0	--
n-Propylbenzene	ND		ug/l	2.0	--

Project Name: CITY OF NEW BEDFORD **Lab Number:** L1016683

Project Number: 115058 **Report Date:** 10/29/10

Method Blank Analysis
Batch Quality Control

Analytical Method: 97,8260B
Analytical Date: 10/28/10 17:34
Analyst: MM

Parameter	Result	Qualifier	Units	RL	MDL
MCP Volatile Organics - Westborough Lab for sample(s): 02,05,07,09-10 Batch: WG440140-3					
1,2,3-Trichlorobenzene	ND		ug/l	2.0	--
1,2,4-Trichlorobenzene	ND		ug/l	2.0	--
1,3,5-Trimethylbenzene	ND		ug/l	2.0	--
1,2,4-Trimethylbenzene	ND		ug/l	2.0	--
Ethyl ether	ND		ug/l	2.0	--
Isopropyl Ether	ND		ug/l	2.0	--
Ethyl-Tert-Butyl-Ether	ND		ug/l	2.0	--
Tertiary-Amyl Methyl Ether	ND		ug/l	2.0	--
1,4-Dioxane	ND		ug/l	250	--

Surrogate	%Recovery	Qualifier	Acceptance Criteria
1,2-Dichloroethane-d4	98		70-130
Toluene-d8	104		70-130
4-Bromofluorobenzene	105		70-130
Dibromofluoromethane	96		70-130

Project Name: CITY OF NEW BEDFORD **Lab Number:** L1016683

Project Number: 115058 **Report Date:** 10/29/10

Method Blank Analysis
Batch Quality Control

Analytical Method: 97,8260B
Analytical Date: 10/29/10 09:04
Analyst: MM

Parameter	Result	Qualifier	Units	RL	MDL
MCP Volatile Organics - Westborough Lab for sample(s): 01,03-04,06,08 Batch: WG440189-3					
Methylene chloride	ND		ug/l	2.0	--
1,1-Dichloroethane	ND		ug/l	1.0	--
Chloroform	ND		ug/l	1.0	--
Carbon tetrachloride	ND		ug/l	1.0	--
1,2-Dichloropropane	ND		ug/l	1.0	--
Dibromochloromethane	ND		ug/l	1.0	--
1,1,2-Trichloroethane	ND		ug/l	1.0	--
Tetrachloroethene	ND		ug/l	1.0	--
Chlorobenzene	ND		ug/l	1.0	--
Trichlorofluoromethane	ND		ug/l	2.0	--
1,2-Dichloroethane	ND		ug/l	1.0	--
1,1,1-Trichloroethane	ND		ug/l	1.0	--
Bromodichloromethane	ND		ug/l	1.0	--
trans-1,3-Dichloropropene	ND		ug/l	0.50	--
cis-1,3-Dichloropropene	ND		ug/l	0.50	--
1,1-Dichloropropene	ND		ug/l	2.0	--
Bromoform	ND		ug/l	2.0	--
1,1,2,2-Tetrachloroethane	ND		ug/l	1.0	--
Benzene	ND		ug/l	1.0	--
Toluene	ND		ug/l	1.0	--
Ethylbenzene	ND		ug/l	1.0	--
Chloromethane	ND		ug/l	2.0	--
Bromomethane	ND		ug/l	2.0	--
Vinyl chloride	ND		ug/l	1.0	--
Chloroethane	ND		ug/l	2.0	--
1,1-Dichloroethene	ND		ug/l	1.0	--
trans-1,2-Dichloroethene	ND		ug/l	1.0	--
Trichloroethene	ND		ug/l	1.0	--
1,2-Dichlorobenzene	ND		ug/l	1.0	--
1,3-Dichlorobenzene	ND		ug/l	1.0	--
1,4-Dichlorobenzene	ND		ug/l	1.0	--

Project Name: CITY OF NEW BEDFORD **Lab Number:** L1016683

Project Number: 115058 **Report Date:** 10/29/10

Method Blank Analysis
Batch Quality Control

Analytical Method: 97,8260B
Analytical Date: 10/29/10 09:04
Analyst: MM

Parameter	Result	Qualifier	Units	RL	MDL
MCP Volatile Organics - Westborough Lab for sample(s): 01,03-04,06,08 Batch: WG440189-3					
Methyl tert butyl ether	ND		ug/l	2.0	--
p/m-Xylene	ND		ug/l	2.0	--
o-Xylene	ND		ug/l	1.0	--
cis-1,2-Dichloroethene	ND		ug/l	1.0	--
Dibromomethane	ND		ug/l	2.0	--
1,2,3-Trichloropropane	ND		ug/l	2.0	--
Styrene	ND		ug/l	1.0	--
Dichlorodifluoromethane	ND		ug/l	2.0	--
Acetone	ND		ug/l	5.0	--
Carbon disulfide	ND		ug/l	2.0	--
2-Butanone	ND		ug/l	5.0	--
4-Methyl-2-pentanone	ND		ug/l	5.0	--
2-Hexanone	ND		ug/l	5.0	--
Bromochloromethane	ND		ug/l	2.0	--
Tetrahydrofuran	ND		ug/l	10	--
2,2-Dichloropropane	ND		ug/l	2.0	--
1,2-Dibromoethane	ND		ug/l	2.0	--
1,3-Dichloropropane	ND		ug/l	2.0	--
1,1,1,2-Tetrachloroethane	ND		ug/l	1.0	--
Bromobenzene	ND		ug/l	2.0	--
n-Butylbenzene	ND		ug/l	2.0	--
sec-Butylbenzene	ND		ug/l	2.0	--
tert-Butylbenzene	ND		ug/l	2.0	--
o-Chlorotoluene	ND		ug/l	2.0	--
p-Chlorotoluene	ND		ug/l	2.0	--
1,2-Dibromo-3-chloropropane	ND		ug/l	2.0	--
Hexachlorobutadiene	ND		ug/l	0.60	--
Isopropylbenzene	ND		ug/l	2.0	--
p-Isopropyltoluene	ND		ug/l	2.0	--
Naphthalene	ND		ug/l	2.0	--
n-Propylbenzene	ND		ug/l	2.0	--

Project Name: CITY OF NEW BEDFORD **Lab Number:** L1016683

Project Number: 115058 **Report Date:** 10/29/10

Method Blank Analysis
Batch Quality Control

Analytical Method: 97,8260B
Analytical Date: 10/29/10 09:04
Analyst: MM

Parameter	Result	Qualifier	Units	RL	MDL
MCP Volatile Organics - Westborough Lab for sample(s): 01,03-04,06,08 Batch: WG440189-3					
1,2,3-Trichlorobenzene	ND		ug/l	2.0	--
1,2,4-Trichlorobenzene	ND		ug/l	2.0	--
1,3,5-Trimethylbenzene	ND		ug/l	2.0	--
1,2,4-Trimethylbenzene	ND		ug/l	2.0	--
Ethyl ether	ND		ug/l	2.0	--
Isopropyl Ether	ND		ug/l	2.0	--
Ethyl-Tert-Butyl-Ether	ND		ug/l	2.0	--
Tertiary-Amyl Methyl Ether	ND		ug/l	2.0	--
1,4-Dioxane	ND		ug/l	250	--

Surrogate	%Recovery	Qualifier	Acceptance Criteria
1,2-Dichloroethane-d4	101		70-130
Toluene-d8	104		70-130
4-Bromofluorobenzene	103		70-130
Dibromofluoromethane	95		70-130

Lab Control Sample Analysis
Batch Quality Control

Project Name: CITY OF NEW BEDFORD
Project Number: 115058

Lab Number: L1016683
Report Date: 10/29/10

Parameter	LCS %Recovery	Qual	LCSD %Recovery	Qual	%Recovery Limits	RPD	Qual	RPD Limits
MCP Volatile Organics - Westborough Lab Associated sample(s): 02,05,07,09-10 Batch: WG440140-1 WG440140-2								
Methylene chloride	102		100		70-130	2		20
1,1-Dichloroethane	99		97		70-130	2		20
Chloroform	98		97		70-130	1		20
Carbon tetrachloride	97		99		70-130	2		20
1,2-Dichloropropane	102		97		70-130	5		20
Dibromochloromethane	90		86		70-130	5		20
1,1,2-Trichloroethane	103		100		70-130	3		20
Tetrachloroethene	100		97		70-130	3		20
Chlorobenzene	94		92		70-130	2		20
Trichlorofluoromethane	93		92		70-130	1		20
1,2-Dichloroethane	101		96		70-130	5		20
1,1,1-Trichloroethane	95		94		70-130	1		20
Bromodichloromethane	93		92		70-130	1		20
trans-1,3-Dichloropropene	92		92		70-130	0		20
cis-1,3-Dichloropropene	93		91		70-130	2		20
1,1-Dichloropropene	98		97		70-130	1		20
Bromoform	92		93		70-130	1		20
1,1,2,2-Tetrachloroethane	106		100		70-130	6		20
Benzene	100		96		70-130	4		20
Toluene	97		96		70-130	1		20
Ethylbenzene	94		93		70-130	1		20

Lab Control Sample Analysis
Batch Quality Control

Project Name: CITY OF NEW BEDFORD
Project Number: 115058

Lab Number: L1016683
Report Date: 10/29/10

Parameter	LCS %Recovery	Qual	LCSD %Recovery	Qual	%Recovery Limits	RPD	Qual	RPD Limits
MCP Volatile Organics - Westborough Lab Associated sample(s): 02,05,07,09-10 Batch: WG440140-1 WG440140-2								
Chloromethane	97		96		70-130	1		20
Bromomethane	107		104		70-130	3		20
Vinyl chloride	95		94		70-130	1		20
Chloroethane	96		95		70-130	1		20
1,1-Dichloroethene	98		98		70-130	0		20
trans-1,2-Dichloroethene	96		94		70-130	2		20
Trichloroethene	97		96		70-130	1		20
1,2-Dichlorobenzene	96		94		70-130	2		20
1,3-Dichlorobenzene	93		90		70-130	3		20
1,4-Dichlorobenzene	96		94		70-130	2		20
Methyl tert butyl ether	109		103		70-130	6		20
p/m-Xylene	93		93		70-130	0		20
o-Xylene	94		94		70-130	0		20
cis-1,2-Dichloroethene	97		95		70-130	2		20
Dibromomethane	106		101		70-130	5		20
1,2,3-Trichloropropane	105		100		70-130	5		20
Styrene	92		92		70-130	0		20
Dichlorodifluoromethane	100		97		70-130	3		20
Acetone	122		109		70-130	11		20
Carbon disulfide	89		90		70-130	1		20
2-Butanone	112		106		70-130	6		20

Lab Control Sample Analysis
Batch Quality Control

Project Name: CITY OF NEW BEDFORD
Project Number: 115058

Lab Number: L1016683
Report Date: 10/29/10

Parameter	LCS %Recovery	Qual	LCSD %Recovery	Qual	%Recovery Limits	RPD	Qual	RPD Limits
MCP Volatile Organics - Westborough Lab Associated sample(s): 02,05,07,09-10 Batch: WG440140-1 WG440140-2								
4-Methyl-2-pentanone	102		98		70-130	4		20
2-Hexanone	111		105		70-130	6		20
Bromochloromethane	103		95		70-130	8		20
Tetrahydrofuran	112		100		70-130	11		20
2,2-Dichloropropane	96		101		70-130	5		20
1,2-Dibromoethane	106		99		70-130	7		20
1,3-Dichloropropane	104		99		70-130	5		20
1,1,1,2-Tetrachloroethane	91		86		70-130	6		20
Bromobenzene	95		93		70-130	2		20
n-Butylbenzene	94		90		70-130	4		20
sec-Butylbenzene	92		91		70-130	1		20
tert-Butylbenzene	93		90		70-130	3		20
o-Chlorotoluene	92		91		70-130	1		20
p-Chlorotoluene	92		90		70-130	2		20
1,2-Dibromo-3-chloropropane	103		104		70-130	1		20
Hexachlorobutadiene	92		94		70-130	2		20
Isopropylbenzene	93		92		70-130	1		20
p-Isopropyltoluene	93		91		70-130	2		20
Naphthalene	109		103		70-130	6		20
n-Propylbenzene	93		92		70-130	1		20
1,2,3-Trichlorobenzene	102		97		70-130	5		20

Lab Control Sample Analysis
Batch Quality Control

Project Name: CITY OF NEW BEDFORD
Project Number: 115058

Lab Number: L1016683
Report Date: 10/29/10

Parameter	LCS %Recovery	Qual	LCSD %Recovery	Qual	%Recovery Limits	RPD	Qual	RPD Limits
MCP Volatile Organics - Westborough Lab Associated sample(s): 02,05,07,09-10 Batch: WG440140-1 WG440140-2								
1,2,4-Trichlorobenzene	99		94		70-130	5		20
1,3,5-Trimethylbenzene	93		91		70-130	2		20
1,2,4-Trimethylbenzene	94		92		70-130	2		20
Ethyl ether	105		105		70-130	0		20
Isopropyl Ether	107		103		70-130	4		20
Ethyl-Tert-Butyl-Ether	109		102		70-130	7		20
Tertiary-Amyl Methyl Ether	104		101		70-130	3		20
1,4-Dioxane	123		117		70-130	5		20

Surrogate	LCS %Recovery	Qual	LCSD %Recovery	Qual	Acceptance Criteria
1,2-Dichloroethane-d4	105		101		70-130
Toluene-d8	102		103		70-130
4-Bromofluorobenzene	101		101		70-130
Dibromofluoromethane	100		100		70-130

Lab Control Sample Analysis
Batch Quality Control

Project Name: CITY OF NEW BEDFORD
Project Number: 115058

Lab Number: L1016683
Report Date: 10/29/10

Parameter	LCS %Recovery	Qual	LCSD %Recovery	Qual	%Recovery Limits	RPD	Qual	RPD Limits
MCP Volatile Organics - Westborough Lab Associated sample(s): 01,03-04,06,08 Batch: WG440189-1 WG440189-2								
Methylene chloride	91		92		70-130	1		20
1,1-Dichloroethane	91		92		70-130	1		20
Chloroform	88		92		70-130	4		20
Carbon tetrachloride	76		83		70-130	9		20
1,2-Dichloropropane	90		91		70-130	1		20
Dibromochloromethane	**69**	Q	77		70-130	11		20
1,1,2-Trichloroethane	94		94		70-130	0		20
Tetrachloroethene	92		93		70-130	1		20
Chlorobenzene	89		88		70-130	1		20
Trichlorofluoromethane	87		92		70-130	6		20
1,2-Dichloroethane	87		90		70-130	3		20
1,1,1-Trichloroethane	79		86		70-130	8		20
Bromodichloromethane	75		84		70-130	11		20
trans-1,3-Dichloropropene	74		79		70-130	7		20
cis-1,3-Dichloropropene	72		79		70-130	9		20
1,1-Dichloropropene	87		89		70-130	2		20
Bromoform	**68**	Q	80		70-130	16		20
1,1,2,2-Tetrachloroethane	93		93		70-130	0		20
Benzene	91		92		70-130	1		20
Toluene	92		90		70-130	2		20
Ethylbenzene	94		94		70-130	0		20

Lab Control Sample Analysis
Batch Quality Control

Project Name: CITY OF NEW BEDFORD
Project Number: 115058

Lab Number: L1016683
Report Date: 10/29/10

Parameter	LCS %Recovery	Qual	LCSD %Recovery	Qual	%Recovery Limits	RPD	Qual	RPD Limits
MCP Volatile Organics - Westborough Lab Associated sample(s): 01,03-04,06,08 Batch: WG440189-1 WG440189-2								
Chloromethane	88		91		70-130	3		20
Bromomethane	87		89		70-130	2		20
Vinyl chloride	83		87		70-130	5		20
Chloroethane	85		88		70-130	3		20
1,1-Dichloroethene	91		91		70-130	0		20
trans-1,2-Dichloroethene	84		88		70-130	5		20
Trichloroethene	88		90		70-130	2		20
1,2-Dichlorobenzene	93		91		70-130	2		20
1,3-Dichlorobenzene	91		89		70-130	2		20
1,4-Dichlorobenzene	97		94		70-130	3		20
Methyl tert butyl ether	85		87		70-130	2		20
p/m-Xylene	95		93		70-130	2		20
o-Xylene	92		92		70-130	0		20
cis-1,2-Dichloroethene	89		91		70-130	2		20
Dibromomethane	94		98		70-130	4		20
1,2,3-Trichloropropane	93		97		70-130	4		20
Styrene	90		90		70-130	0		20
Dichlorodifluoromethane	82		81		70-130	1		20
Acetone	94		98		70-130	4		20
Carbon disulfide	85		89		70-130	5		20
2-Butanone	96		95		70-130	1		20

Lab Control Sample Analysis
Batch Quality Control

Project Name: CITY OF NEW BEDFORD
Project Number: 115058
Lab Number: L1016683
Report Date: 10/29/10

Parameter	LCS %Recovery	Qual	LCSD %Recovery	Qual	%Recovery Limits	RPD	Qual	RPD Limits
MCP Volatile Organics - Westborough Lab Associated sample(s): 01,03-04,06,08 Batch: WG440189-1 WG440189-2								
4-Methyl-2-pentanone	86		95		70-130	10		20
2-Hexanone	90		97		70-130	7		20
Bromochloromethane	89		89		70-130	0		20
Tetrahydrofuran	89		88		70-130	1		20
2,2-Dichloropropane	85		89		70-130	5		20
1,2-Dibromoethane	89		92		70-130	3		20
1,3-Dichloropropane	96		97		70-130	1		20
1,1,1,2-Tetrachloroethane	78		81		70-130	4		20
Bromobenzene	92		92		70-130	0		20
n-Butylbenzene	78		76		70-130	3		20
sec-Butylbenzene	94		90		70-130	4		20
tert-Butylbenzene	93		90		70-130	3		20
o-Chlorotoluene	93		91		70-130	2		20
p-Chlorotoluene	93		90		70-130	3		20
1,2-Dibromo-3-chloropropane	79		97		70-130	20		20
Hexachlorobutadiene	90		84		70-130	7		20
Isopropylbenzene	93		92		70-130	1		20
p-Isopropyltoluene	98		94		70-130	4		20
Naphthalene	93		93		70-130	0		20
n-Propylbenzene	96		93		70-130	3		20
1,2,3-Trichlorobenzene	91		91		70-130	0		20

Lab Control Sample Analysis
Batch Quality Control

Project Name: CITY OF NEW BEDFORD
Project Number: 115058
Lab Number: L1016683
Report Date: 10/29/10

Parameter	LCS %Recovery	Qual	LCSD %Recovery	Qual	%Recovery Limits	RPD	Qual	RPD Limits
MCP Volatile Organics - Westborough Lab Associated sample(s): 01,03-04,06,08 Batch: WG440189-1 WG440189-2								
1,2,4-Trichlorobenzene	90		90		70-130	0		20
1,3,5-Trimethylbenzene	92		90		70-130	2		20
1,2,4-Trimethylbenzene	96		94		70-130	2		20
Ethyl ether	91		94		70-130	3		20
Isopropyl Ether	93		94		70-130	1		20
Ethyl-Tert-Butyl-Ether	87		90		70-130	3		20
Tertiary-Amyl Methyl Ether	87		94		70-130	8		20
1,4-Dioxane	94		96		70-130	2		20

Surrogate	LCS %Recovery	Qual	LCSD %Recovery	Qual	Acceptance Criteria
1,2-Dichloroethane-d4	96		102		70-130
Toluene-d8	104		102		70-130
4-Bromofluorobenzene	100		99		70-130
Dibromofluoromethane	97		100		70-130

Project Name: CITY OF NEW BEDFORD
Project Number: 115058

Lab Number: L1016683
Report Date: 10/29/10

Sample Receipt and Container Information

Were project specific reporting limits specified? YES

Reagent H2O Preserved Vials Frozen on: NA

Cooler Information	Custody Seal
Cooler	
A	Absent

Container Information

Container ID	Container Type	Cooler	pH	Temp deg C	Pres	Seal	Analysis(*)
L1016683-01A	Vial HCl preserved	A	N/A	5.1	Y	Absent	MCP-8260-10(14)
L1016683-01B	Vial HCl preserved	A	N/A	5.1	Y	Absent	MCP-8260-10(14)
L1016683-02A	Vial HCl preserved	A	N/A	5.1	Y	Absent	MCP-8260-10(14)
L1016683-02B	Vial HCl preserved	A	N/A	5.1	Y	Absent	MCP-8260-10(14)
L1016683-03A	Vial HCl preserved	A	N/A	5.1	Y	Absent	MCP-8260-10(14)
L1016683-03B	Vial HCl preserved	A	N/A	5.1	Y	Absent	MCP-8260-10(14)
L1016683-04A	Vial HCl preserved	A	N/A	5.1	Y	Absent	MCP-8260-10(14)
L1016683-04B	Vial HCl preserved	A	N/A	5.1	Y	Absent	MCP-8260-10(14)
L1016683-05A	Vial HCl preserved	A	N/A	5.1	Y	Absent	MCP-8260-10(14)
L1016683-05B	Vial HCl preserved	A	N/A	5.1	Y	Absent	MCP-8260-10(14)
L1016683-06A	Vial HCl preserved	A	N/A	5.1	Y	Absent	MCP-8260-10(14)
L1016683-06B	Vial HCl preserved	A	N/A	5.1	Y	Absent	MCP-8260-10(14)
L1016683-07A	Vial HCl preserved	A	N/A	5.1	Y	Absent	MCP-8260-10(14)
L1016683-07B	Vial HCl preserved	A	N/A	5.1	Y	Absent	MCP-8260-10(14)
L1016683-08A	Vial HCl preserved	A	N/A	5.1	Y	Absent	MCP-8260-10(14)
L1016683-08B	Vial HCl preserved	A	N/A	5.1	Y	Absent	MCP-8260-10(14)
L1016683-09A	Vial HCl preserved	A	N/A	5.1	Y	Absent	MCP-8260-10(14)
L1016683-09B	Vial HCl preserved	A	N/A	5.1	Y	Absent	MCP-8260-10(14)
L1016683-10A	Vial HCl preserved	A	N/A	5.1	Y	Absent	MCP-8260-10(14)
L1016683-10B	Vial HCl preserved	A	N/A	5.1	Y	Absent	MCP-8260-10(14)

*Values in parentheses indicate holding time in days

Project Name:	CITY OF NEW BEDFORD	**Lab Number:**	L1016683
Project Number:	115058	**Report Date:**	10/29/10

GLOSSARY

Acronyms

EPA	· Environmental Protection Agency.
LCS	· Laboratory Control Sample: A sample matrix, free from the analytes of interest, spiked with verified known amounts of analytes or a material containing known and verified amounts of analytes.
LCSD	· Laboratory Control Sample Duplicate: Refer to LCS.
MDL	· Method Detection Limit: This value represents the level to which target analyte concentrations are reported as estimated values, when those target analyte concentrations are quantified below the reporting limit (RL). The MDL includes any adjustments from dilutions, concentrations or moisture content, where applicable.
MS	· Matrix Spike Sample: A sample prepared by adding a known mass of target analyte to a specified amount of matrix sample for which an independent estimate of target analyte concentration is available.
MSD	· Matrix Spike Sample Duplicate: Refer to MS.
NA	· Not Applicable.
NC	· Not Calculated: Term is utilized when one or more of the results utilized in the calculation are non-detect at the parameter's reporting unit.
NI	· Not Ignitable.
RL	· Reporting Limit: The value at which an instrument can accurately measure an analyte at a specific concentration. The RL includes any adjustments from dilutions, concentrations or moisture content, where applicable.
RPD	· Relative Percent Difference: The results from matrix and/or matrix spike duplicates are primarily designed to assess the precision of analytical results in a given matrix and are expressed as relative percent difference (RPD). Values which are less than five times the reporting limit for any individual parameter are evaluated by utilizing the absolute difference between the values; although the RPD value will be provided in the report.

Terms

Analytical Method: Both the document from which the method originates and the analytical reference method. (Example: EPA 8260B is shown as 1,8260B.) The codes for the reference method documents are provided in the References section of the Addendum.

Data Qualifiers

A	- Spectra identified as "Aldol Condensation Product".
B	- The analyte was detected above the reporting limit in the associated method blank. Flag only applies to associated field samples that have detectable concentrations of the analyte at less than five times (5x) the concentration found in the blank. For MCP-related projects, flag only applies to associated field samples that have detectable concentrations of the analyte at less than ten times (10x) the concentration found in the blank. For DOD-related projects, flag only applies to associated field samples that have detectable concentrations of the analyte at less than ten times (10x) the concentration found in the blank AND the analyte was detected above one-half the reporting limit (or above the reporting limit for common lab contaminants) in the associated method blank.
D	- Concentration of analyte was quantified from diluted analysis. Flag only applies to field samples that have detectable concentrations of the analyte.
E	- Concentration of analyte exceeds the range of the calibration curve and/or linear range of the instrument.
H	- The analysis of pH was performed beyond the regulatory-required holding time of 15 minutes from the time of sample collection.
I	- The RPD between the results for the two columns exceeds the method-specified criteria; however, the lower value has been reported due to obvious interference.
P	- The RPD between the results for the two columns exceeds the method-specified criteria.
Q	- The quality control sample exceeds the associated acceptance criteria. Note: This flag is not applicable for matrix spike recoveries when the sample concentration is greater than 4x the spike added or for batch duplicate RPD when the sample concentrations are less than 5x the RL. (Metals only.)
R	- Analytical results are from sample re-analysis.

Report Format: Data Usability Report

Project Name:	CITY OF NEW BEDFORD	**Lab Number:**	L1016683
Project Number:	115058	**Report Date:**	10/29/10

Data Qualifiers

RE - Analytical results are from sample re-extraction.

J - Estimated value. This represents an estimated concentration for Tentatively Identified Compounds (TICs).

ND - Not detected at the reporting limit (RL) for the sample.

Report Format: Data Usability Report

Project Name: CITY OF NEW BEDFORD **Lab Number:** L1016683
Project Number: 115058 **Report Date:** 10/29/10

REFERENCES

97 EPA Test Methods (SW-846) with QC Requirements & Performance Standards for the Analysis of EPA SW-846 Methods under the Massachusetts Contingency Plan, WSC-CAM-IIA, IIB, IIIA, IIIB, IIIC, IIID, VA, VB, VC, VIA, VIB, VIIIA and VIIIB, July 2010.

LIMITATION OF LIABILITIES

Alpha Analytical performs services with reasonable care and diligence normal to the analytical testing laboratory industry. In the event of an error, the sole and exclusive responsibility of Alpha Analytical shall be to re-perform the work at it's own expense. In no event shall Alpha Analytical be held liable for any incidental, consequential or special damages, including but not limited to, damages in any way connected with the use of, interpretation of, information or analysis provided by Alpha Analytical.

We strongly urge our clients to comply with EPA protocol regarding sample volume, preservation, cooling, containers, sampling procedures, holding time and splitting of samples in the field.

Certificate/Approval Program Summary

Last revised July 19, 2010 - Westboro Facility

The following list includes only those analytes/methods for which certification/approval is currently held.
For a complete listing of analytes for the referenced methods, please contact your Alpha Customer Service Representative.

Connecticut Department of Public Health Certificate/Lab ID: PH-0574. ***NELAP Accredited Solid Waste/Soil.***

Drinking Water (Inorganic Parameters: Color, pH, Turbidity, Conductivity, Alkalinity, Chloride, Free Residual Chlorine, Fluoride, Calcium Hardness, Sulfate, Nitrate, Nitrite, Aluminum, Antimony, Arsenic, Barium, Beryllium, Cadmium, Calcium, Chromium, Copper, Iron, Lead, Magnesium, Manganese, Mercury, Molybdenum, Nickel, Potassium, Selenium, Silver, Sodium, Thallium, Vanadium, Zinc, Total Dissolved Solids, Total Organic Carbon, Total Cyanide, Perchlorate. Organic Parameters: Volatile Organics 524.2, Total Trihalomethanes 524.2, 1,2-Dibromo-3-chloropropane (DBCP), Ethylene Dibromide (EDB), 1,4-Dioxane (Mod 8270). Microbiology Parameters: Total Coliform-MF mEndo (SM9222B), Total Coliform – Colilert (SM9223 P/A), E. Coli. – Colilert (SM9223 P/A), HPC – Pour Plate (SM9215B), Fecal Coliform – MF m-FC (SM9222D))
Wastewater/Non-Potable Water (Inorganic Parameters: Color, pH, Conductivity, Acidity, Alkalinity, Chloride, Total Residual Chlorine, Fluoride, Total Hardness, Silica, Sulfate, Sulfide, Ammonia, Kjeldahl Nitrogen, Nitrate, Nitrite, O-Phosphate, Total Phosphorus, Aluminum, Antimony, Arsenic, Barium, Beryllium, Boron, Cadmium, Calcium, Chromium, Hexavalent Chromium, Cobalt, Copper, Iron, Lead, Magnesium, Manganese, Mercury, Molybdenum, Nickel, Potassium, Selenium, Silver, Sodium, Strontium, Thallium, Tin, Titanium, Vanadium, Zinc, Total Residue (Solids), Total Dissolved Solids, Total Suspended Solids (non-filterable), BOD, CBOD, COD, TOC, Total Cyanide, Phenolics, Foaming Agents (MBAS), Bromide, Oil and Grease. Organic Parameters: PCBs, Organochlorine Pesticides, Technical Chlordane, Toxaphene, 2,4-D, 2,4,5-T, 2,4,5-TP(Silvex), Acid Extractables (Phenols), Benzidines, Phthalate Esters, Nitrosamines, Nitroaromatics & Isophorone, Polynuclear Aromatic Hydrocarbons, Haloethers, Chlorinated Hydrocarbons, Volatile Organics, TPH (HEM/SGT), Extractable Petroleum Hydrocarbons (ETPH), MA-EPH, MA-VPH. Microbiology Parameters: Total Coliform – MF mEndo (SM9222B), Total Coliform – MTF (SM9221B), HPC – Pour Plate (SM9215B), Fecal Coliform – MF m-FC (SM9222D), Fecal Coliform – A-1 Broth (SM9221E).)
Solid Waste/Soil (Inorganic Parameters: pH, Sulfide, Aluminum, Antimony, Arsenic, Barium, Beryllium, Boron, Cadmium, Calcium, Chromium, Hexavalent Chromium, Cobalt, Copper, Iron, Lead, Magnesium, Manganese, Mercury, Molybdenum, Nickel, Potassium, Selenium, Silver, Sodium, Thallium, Tin, Vanadium, Zinc, Total Cyanide, Ignitability, Phenolics, Corrosivity, TCLP Leach (1311), SPLP Leach (1312 metals only), Reactivity. Organic Parameters: PCBs, PCBs in Oil, Organochlorine Pesticides, Technical Chlordane, Toxaphene, Extractable Petroleum Hydrocarbons (ETPH), MA-EPH, MA-VPH, Dicamba, 2,4-D, 2,4,5-T, 2,4,5-TP(Silvex), Volatile Organics, Acid Extractables (Phenols), 3.3'-Dichlorobenzidine, Phthalates, Nitrosamines, Nitroaromatics & Cyclic Ketones, PAHs, Haloethers, Chlorinated Hydrocarbons.)

Maine Department of Human Services Certificate/Lab ID: 2009024.
Drinking Water (Inorganic Parameters: SM9215B, 9222D, 9223B, EPA 180.1, 300.0, 353.2, SM2130B, 2320B, 4500Cl-D, 4500CN-C, 4500CN-E, 4500F-C, 4500H+B, 4500NO3-F, EPA 200.7, EPA 200.8, 245.1, EPA 300.0. Organic Parameters: 504.1, 524.2.)
Wastewater/Non-Potable Water (Inorganic Parameters: EPA 120.1, 1664A, 350.1, 351.1, 353.2, 410.4, 420.1, Lachat 10-107-06-1-B, SM2320B, 2340B, 2510B, 2540C, 2540D, 426C, 4500Cl-D, 4500Cl-E, 4500CN-C, 4500CN-E, 4500F-B, 4500F-C, 4500H+B, 4500Norg-B, 4500Norg-C, 4500NH3-B, 4500NH3-G, 4500NH3-H, 4500NO3-F, 4500P-B.5, 4500P-E, 5210B, 5220D, 5310C, EPA 200.7, 200.8, 245.1. Organic Parameters: 608, 624, ME DRO, ME GRO, MA EPH, MA VPH.)
*Solid Waste/Soil (*Organic Parameters: ME DRO, ME GRO, MA EPH, MA VPH.)

Massachusetts Department of Environmental Protection Certificate/Lab ID: M-MA086.
Drinking Water
Inorganic Parameters: (EPA 200.8 for: Sb,As,Ba,Be,Cd,Cr,Cu,Pb,Ni,Se,Tl)
(EPA 200.7 for: Ba,Be,Ca,Cd,Cr,Cu,Na,Ni) 245.1, (300.0 for: Nitrate-N, Fluoride, Sulfate)
353.2 for: Nitrate-N, Nitrite-N; SM4500NO3-F, 4500F-C, 4500CN-CE, EPA 180.1, SM2130B, SM4500Cl-D, 2320B, SM2540C, SM4500H-B.
Organic Parameters: (EPA 524.2 for: Trihalomethanes, Volatile Organics)
(504.1 for: 1,2-Dibromoethane, 1,2-Dibromo-3-Chloropropane), 314.0, 332.
Microbiology Parameters: SM9215B; ENZ. SUB. SM9223; MF-SM9222D
Non-Potable Water
Inorganic Parameters:, (EPA 200.8 for: Al,Sb,As,Be,Cd,Cr,Cu,Pb,Mn,Ni,Se,Ag,Tl,Zn)
(EPA 200.7 for: Al,Sb,As,Be,Cd,Cr,Co,Cu,Fe,Pb,Mn,Mo,Ni,Se,Ag,Sr,Ti,Tl, V,Zn,Ca,Mg,Na,K)
245.1, SM4500H,B, EPA 120.1, SM2510B, 2540C, 2540B, 2340B, 2320B, 4500CL-E, 4500F-BC, 426C, SM4500NH3-BH, (EPA 350.1 for: Ammonia-N), LACHAT 10-107-06-1-B for Ammonia-N, SM4500NO3-F, 353.2 for Nitrate-N, SM4500NH3-B,C-Titr, SM4500NH3-BC-NES, EPA 351.1, SM4500P-E, 4500P-B,E, 5220D, EPA 410.4, SM 5210B, 5310C, 4500CL-D, EPA 1664, SM14 510AC, EPA 420, SM4500-CN-CE, SM2540D.
Organic Parameters: (EPA 624 for Volatile Halocarbons, Volatile Aromatics)

(608 for: Chlordane, Aldrin, Dieldrin, DDD, DDE, DDT, Heptachlor, Heptachlor Epoxide, PCBs-Water), EPA 625 for SVOC Acid Extractables and SVOC Base/Neutral Extractables, 600/4-81-045-PCB-Oil

New Hampshire Department of Environmental Services Certificate/Lab ID: 200307. ***NELAP Accredited.***
Drinking Water (Inorganic Parameters: SM6215B, 9222B, 9223B Colilert, EPA 200.7, 200.8, 245.2, 120.1, 300.0, 314.0, SM4500CN-E, 4500H+B, 4500NO3-F, 2320B, 2510B, 2540C, 4500F-C, 5310C, 2120B, EPA 331.0. Organic Parameters: 504.1, 524.2, SM6251B.)
Non-Potable Water (Inorganic Parameters: SM9222D, 9221B, 9222B, 9221E-EC, EPA 200.7, 200.8, 245.1, 245.2, SW-846 6010B, 6020, 7196A, 7470A, SM3500-CR-D, EPA 120.1, 300.0, 350.1, 351.1, 353.2, 420.1, 1664A, SW-846 9010, 9030, 9040B, SM426C, SM2310B, 2540B, 2540D, 4500H+B, 4500NH3-H, 4500NH3-E, 4500NO2-B, 4500P-E, 4500-S2-D, 5210B, 2320B, 2540C, 4500F-C, 5310C, 5540C, LACHAT 10-117-07-1-B, LACHAT 10-107-06-1-B, LACHAT 10-107-04-1-C, LACHAT 10-107-04-1-J, LACHAT 10-117-07-1-A, SM4500CL-E, LACHAT 10-204-00-1-A, LACHAT 10-107-06-2-D. Organic Parameters: SW-846 3005A, 3015A, 3510C, 5030B, 8021B, 8260B, 8270C, 8330, EPA 624, 625, 608, SW-846 8082, 8081A.)
Solid & Chemical Materials (Inorganic Parameters: SW-846 6010B, 7196A, 7471A, 7.3.3.2, 7.3.4.2, 1010, 1030, 9010, 9012A, 9014, 9030B, 9040, 9045C, 9050C, 1311, 3005A, 3050B, 3051A. Organic Parameters: SW-846 3540C, 3545, 3580A, 5030B, 5035, 8021B, 8260B, 8270C, 8330, 8151A, 8082, 8081A.)

New Jersey Department of Environmental Protection Certificate/Lab ID: MA935. ***NELAP Accredited.***
Drinking Water (Inorganic Parameters: SM9222B, 9221E, 9223B, 9215B, 4500NO3-F, 4500F-C, EPA 300.0, 200.7, 2540C, 2320B, 314.0, SM2120B, 2510B, 5310C, SM4500H-B, EPA 200.8, 245.2. Organic Parameters: 504.1, SM6251B, 524.2.)
Non-Potable Water (Inorganic Parameters: SM5210B, EPA 410.4, SM5220D, 4500Cl-D, EPA 300.0, SM2120B, SM4500F-BC, EPA 200.7, 351.1, LACHAT 10-107-06-2-D, EPA 353.2, SM4500NO3-F, 4500NO2-B, EPA 1664A, SM5310B, C or D, 4500-PE, EPA 420.1, SM4500P-B5+E, 2540B, 2540C, 2540D, EPA 120.1, SM2510B, SM15 426C, SM9221CE, 9222D, 9221B, 9222B, 9215B, 2310B, 2320B, 4500NH3-H, 4500-S D, EPA 350.1, SM5210B, SW-846 3015, 6020, 7470A, 5540C, 4500H-B, EPA 200.8, SM3500Cr-D, EPA 245.1, 245.2, SW-846 9040B, 3005A, EPA 6010B, 7196A, SW-846 9010B, 9030B. Organic Parameters: SW-846 8260B, 8270C, 3510C, EPA 608, 624, 625, SW-846 5030B, 8021B, 8081A, 8082, 8151A, 8330, NJ OQA-QAM-025 Rev.7.)
Solid & Chemical Materials (Inorganic Parameters: SW-846 9040B, 3005A, 6010B, 7196A, 5030B, 9010B, 9030B, 1030, 1311, 3050B, 3051, 7471A, 9014, 9012A, 9045C, 9050A, 9065. Organic Parameters: SW-846 8021B, 8081A, 8082, 8151A, 8330, 8260B, 8270C, 1311, 1312, 3540C, 3545, 3550B, 3580A, 5035L, 5035H, NJ OQA-QAM-025 Rev.7.)

New York Department of Health Certificate/Lab ID: 11148. ***NELAP Accredited.***
Drinking Water (Inorganic Parameters: SM9223B, 9222B, 9215B, EPA 200.8, 200.7, 245.2, SM5310C, EPA 314.0, 332.0, SM2320B, EPA 300.0, SM2120B, 4500CN-E, 4500F-C, 4500H-B, 4500NO3-F, 2540C, EPA 120.1, SM 2510B. Organic Parameters: EPA 524.2, 504.1.)
Non-Potable Water (Inorganic Parameters: SM9221E, 9222D, 9221B, 9222B, 9215B, 5210B, EPA 410.4, SM5220D, 2310B-4a, 2320B, EPA 200.7, 300.0, LACHAT 10-117-07-1A or B, SM4500Cl-E, 4500F-C, SM15 426C, EPA 350.1, LACHAT 10-107-06-1-B, SM4500NH3-H, EPA 351.1, LACHAT 10-107-06-2, EPA 353.2, LACHAT 10-107-041-C, SM4500-NO3-F, 4500-NO2-B, 4500P-E, 2540C, 2540B, 2540D, EPA 200.8, EPA 6010B, 6020, EPA 7196A, S\M3500Cr-D, EPA 245.1, 245.2, 7470A, SM2120B, SM4500-CN-E LACHAT 10-204-00-1-A, EPA 9040B, SM4500-HB, EPA 1664A, SM5310C, EPA 420.1, SM14 510C, EPA 120.1, SM2510B, SM4500S-D, SM5540C, EPA 3005A, 3015. Organic Parameters: EPA 624, 8260B, 8270C, 625, 608, 8081A, 8151A, 8330, 8082, EPA 3510C, 5030B, 9010B, 9030B.)
Solid & Hazardous Waste (Inorganic Parameters: 1010, 1030, SW-846 Ch 7 Sec 7.3, EPA 6010B, 7196A, 7471A, 9012A, 9014, 9040B, 9045C, 9065, 9050, EPA 1311, 1312, 3005A, 3050B, 9010B, 9030B. Organic Parameters: EPA 8260B, 8270C, 8081A, 8151A, 8330, 8082, 3540C, 3545, 3546, 3580, 5030B, 5035.)

North Carolina Department of the Environment and Natural Resources Certificate/Lab ID : 666. Organic Parameters: MA-EPH, MA-VPH.

Pennsylvania Department of Environmental Protection Certificate/Lab ID : 68-03671. ***NELAP Accredited.***
Non-Potable Water (Organic Parameters: EPA 3510C, 5030B, 625, 624. 608, 8081A, 8082, 8151A, 8260B, 8270C, 8330)
Solid & Hazardous Waste (Inorganic Parameters: EPA 1010, 1030, 1311, 3050B, 3051, 6010B, EPA 7.3.3.2, EPA 7.3.4.2, 7196A, 7471A, 9010B, 9012A, 9014, 9040B, 9045C, 9050, 9065. Organic Parameters: 3540C, 3545, 3580A, 5035, 8021B, 8081A, 8082, 8151A, 8260B, 8270C, 8330)

Rhode Island Department of Health Certificate/Lab ID: LAO00065. ***NELAP Accredited via NY-DOH.***
Refer to MA-DEP Certificate for Potable and Non-Potable Water.
Refer to NY-DOH Certificate for Potable and Non-Potable Water.

Texas Commisson on Environmental Quality Certificate/Lab ID: T104704476-09-1. ***NELAP Accredited.***
Non-Potable Water (Inorganic Parameters: EPA 120.1, 1664, 200.7, 200.8, 245.1, 245.2, 300.0, 350.1, 351.1, 353.2, 376.2, 410.4, 420.1, 6010, 6020, 7196, 7470, 9040, SM 2120B, 2310B, 2320B, 2510B, 2540B, 2540C, 2540D, 426C, 4500CL-E, 4500CN-E, 4500F-C, 4500H+B, 4500NH3-H, 4500NO2B, 4500P-E, 4500 S2¯D, 510C, 5210B, 5220D, 5310C, 5540C. Organic Parameters: EPA 608, 624, 625, 8081, 8082, 8151, 8260, 8270, 8330.)

Solid & Hazardous Waste (Inorganic Parameters: EPA 1311, 1312, 9012, 9014, 9040, 9045, 9050, 9065.)

Department of Defense Certificate/Lab ID: L2217.
Drinking Water (Inorganic Parameters: SM 4500H-B. Organic Parameters: EPA 524.2, 504.1.)

Non-Potable Water (Inorganic Parameters: EPA 200.7, 200.8, 6010B, 6020, 245.1, 245.2, 7470A, 9040B, 300.0, 9251, 9038, 350.1, 353.2, 351.1, 120.1, 9050A , 410.4, 9060, 1664, 420.1, LACHAT 10-107-06-1-B, SM 4500CN-E, 4500H-B, 4500CL-E, 4500F-BC, 4500SO4-E, 426C, 4500NH3-B, 4500NH3-H, 4500NO3-F, 4500NO2-B, 4500Norg-C, 4500PE, 2510B, 5540C, 5220D, 5310C, 2540B, 2540C, 2540D, 510C, 4500S2-AD, 3005A, 3015, 9010B, 9030B. Organic Parameters: EPA 8260B, 8270C, 8330, 625, 8082, 8151A, 8081A, 3510C, 5030B, MassDEP EPH, MassDEP VPH.)

Solid & Hazardous Waste (Inorganic Parameters: EPA 200.7, 6010B, 7471A, 9040B, 9045C, 9065, 420.1, 9012A, 6860, 1311, 1312, 3050B, 9030B, 3051, 9010B, 3540C, SM 510ABC, 4500CN-CE, 2540G, SW-846 7.3, Organic Parameters: EPA 8260B, 8270C, 8330, 8082, 8081A, 8151A, 3545, 3546, 3580, 5035, MassDEP EPH, MassDEP VPH.)

Analytes Not Accredited by NELAP
Certification is not available by NELAP for the following analytes: **EPA 8260B:** Freon-113, 1,2,4,5-Tetramethylbenzene, 4-Ethyltoluene. **EPA 8330A:** PETN, Picric Acid, Nitroglycerine, 2,6-DANT, 2,4-DANT. **EPA 8270C:** Methyl naphthalene, Dimethyl naphthalene, Total Methylnapthalenes, Total Dimethylnaphthalenes, 1,4-Diphenylhydrazine (Azobenzene). **EPA 625:** 4-Chloroaniline. **EPA 350.1** for Ammonia in a Soil matrix.

CHAIN OF CUSTODY

PAGE 1 OF 1

Date Rec'd in Lab: 10/22/10

ALPHA Job #: L1016683

WESTBORO, MA
TEL: 508-898-9220
FAX: 508-898-9193

MANSFIELD, MA
TEL: 508-822-9300
FAX: 508-822-3288

Serial No:10291016:43

Client Information

Client: TRC
Address: 650 Suffolk St
Lowell MA 01854
Phone: 978-970-5600
Fax:
Email: dsullivan@trcsolutions.com

☐ These samples have been previously analyzed by Alpha

Project Information

Project Name: City of New Bedford
Project Location: NBHS
Project #: 115058
Project Manager: Dave Sullivan
ALPHA Quote #:

Turn-Around Time

☐ Standard ☐ RUSH (only confirmed if pre-approved!)

Date Due: 5 DAY 10/29/10 Time:

Report Information - Data Deliverables

☐ FAX ☒ EMAIL
☐ ADEx ☐ Add'l Deliverables

Billing Information

☐ Same as Client info PO #:

Regulatory Requirements/Report Limits

State /Fed Program MCP-GW-1, 2, 3 Criteria

MA MCP PRESUMPTIVE CERTAINTY --- CT REASONABLE CONFIDENCE PROTO

☒ Yes ☐ No Are MCP Analytical Methods Required?
☐ Yes ☐ No Is Matrix Spike (MS) Required on this SDG? (If yes see note in Comments)
☐ Yes ☒ No Are CT RCP (Reasonable Confidence Protocols) Required?

Other Project Specific Requirements/Comments/Detection Limits:

If MS is required , indicate in Sample Specific Comments which samples and what tests MS to be performed.
(Note: All ***CAM*** methods for inorganic analyses require MS every 20 soil samples)

ANALYSIS: VOCs 8260+TO15

SAMPLE HANDLING
Filtration
☐ Done
☐ Not needed
☐ Lab to do
Preservation
☐ Lab to do
(Please specify below)

ALPHA Lab ID (Lab Use Only)	Sample ID	Collection Date	Collection Time	Sample Matrix	Sampler's Initials	VOCs 8260+TO15	Sample Specific Comments	TOTAL # BOTTLES
6683-01	MW-32	10/21/10	1045	GW	ASD	X		
-02	MW-31		1100	GW	KDJ	X		
-03	MW-28		1355	GW	KDJ	X		
-04	MW-33		1410	GW	ASD	X		
-05	MW-24		1550	GW	ASD	X		
-06	MW-27		1605	GW	KDJ	X		
-07	D-1-24		1650	GW	ASD	X		
-08	MW-30	10/22/10	0950	GW	KDJ	X		
-09	MW-7		1020	GW	ASD	X		
-10	Trip Blank					X		
					Container Type	V		
					Preservative	B		

PLEASE ANSWER QUESTIONS ABOVE!

IS YOUR PROJECT MA MCP *or* CT RCP?

Relinquished By:	Date/Time	Received By:	Date/Time
Kevin Jordan	10/22/10 13:10	[illegible]	10/22/10 13:10

Please print clearly, legibly and completely. Samples can not be logged in and turnaround time clock will not start until any ambiguities are resolved. All samples submitted are subject to Alpha's Terms and Conditions. See reverse side.

FORM NO: 01-01 (rev. 18-Jan-2010)

7A
VOLATILE CONTINUING CALIBRATION CHECK

Lab Name: Alpha Analytical Labs

SDG No.: L1016683

Instrument ID: Quimby.i Calibration Date: 28-OCT-2010 Time: 15:59

Lab File ID: 1028N02.D Init. Calib. Date(s): 28-OCT-2 28-OCT-2

Sample No: 8260 CCAL Init. Calib. Times : 07:57 14:29

Compound	RRF	RRF	MIN RRF	%D	MAX %D	
dichlorodifluoromethane	.42114	.4225	.1	0	20	
chloromethane	.62163	.60454	.1	3	20	
vinyl chloride	.4285	.40693	.1	5	20	
bromomethane	.32572	.34933	.1	-7	20	
chloroethane	.35035	.33573	.1	4	20	
trichlorofluoromethane	.6241	.58197	.1	7	20	
ethyl ether	.13811	.14549	.05	-5	20	
acrolien	.00735	.00911	.05	-24	20	F
freon-113	.33265	.33627	.1	-1	20	
acetone	100	123	.1	-23	20	F
1,1,-dichloroethene	.31495	.30964	.1	2	20	
tert-butyl alcohol	500	709	.05	-42	20	F
iodomethane	.39128	.30673	.05	22	20	F
methylene chloride	.34246	.35043	.1	-2	20	
carbon disulfide	.90993	.81324	.1	11	20	
acrylonitrile	.0664	.06503	.05	2	20	
methyl tert butyl ether	.48005	.52453	.1	-9	20	
Halothane	.24022	.23673	.05	1	20	
trans-1,2-dichloroethene	.36264	.34652	.1	4	20	
Diisopropyl Ether	1.1682	1.2458	.05	-7	20	
vinyl acetate	.57598	.62279	.05	-8	20	
1,1-dichloroethane	.70419	.69515	.2	1	20	
Ethyl-Tert-Butyl-Ether	.7286	.7932	.05	-9	20	
2-butanone	.06714	.07506	.1	-12	20	F
2,2-dichloropropane	.34238	.32787	.05	4	20	
ethyl acetate	.16284	.18129	.05	-11	20	
cis-1,2-dichloroethene	.37932	.36638	.1	3	20	
chloroform	.61594	.60586	.2	2	20	
bromochloromethane	.12887	.13246	.05	-3	20	
tetrahydrofuran	.04454	.05005	.05	-12	20	F
1,1,1-trichloroethane	.49271	.46647	.1	5	20	
1,1-dichloropropene	.52258	.51378	.05	2	20	
carbontetrachloride	.35402	.3422	.1	3	20	
Tertiary-Amyl Methyl Ether	.46697	.48421	.05	-4	20	
1,2-dichloroethane	.39579	.40087	.1	-1	20	
benzene	1.5397	1.5343	.5	0	20	
trichloroethene	.37211	.36156	.2	3	20	
1,2-dichloropropane	.35603	.36503	.1	-3	20	

FORM VII MCP-8260-10

7A
CONTINUING CALIBRATION CHECK

Lab Name: Alpha Analytical Labs

SDG No.: L1016683

Instrument ID: Quimby.i Calibration Date: 28-OCT-2010 Time: 15:59

Lab File ID: 1028N02.D Init. Calib. Date(s): 28-OCT-2 28-OCT-2

Sample No: 8260 CCAL Init. Calib. Times : 07:57 14:29

Compound	$\overline{RRF}$	RRF	MIN RRF	%D	MAX %D	
bromodichloromethane	.35384	.33067	.2	7	20	
1,4-dioxane	.00109	.00135	.05	-23	20	F
dibromomethane	.12703	.13519	.05	-6	20	
2-chloroethylvinyl ether	.10597	.11073	.05	-4	20	
4-methyl-2-pentanone	.04832	.04905	.1	-2	20	F
cis-1,3-dichloropropene	.41611	.38626	.2	7	20	
toluene	1.2794	1.2408	.4	3	20	
trans-1,3-dichloropropene	.38217	.35294	.1	8	20	
1,1,2-trichloroethane	.21745	.22352	.1	-3	20	
2-hexanone	.12616	.14011	.1	-11	20	
1,3-dichloropropane	.48008	.50196	.05	-5	20	
tetrachloroethene	.50656	.50403	.2	0	20	
chlorodibromomethane	.22898	.20566	.1	10	20	
1,2-dibromoethane	.21845	.23083	.1	-6	20	
chlorobenzene	1.3784	1.2947	.5	6	20	
1,1,1,2-tetrachloroethane	.33964	.30908	.05	9	20	
ethyl benzene	2.6402	2.4886	.1	6	20	
p/m xylene	1.0415	.96808	.1	7	20	
o xylene	.99264	.93015	.3	6	20	
styrene	1.5901	1.4647	.31	8	20	
isopropylbenzene	2.7063	2.5202	.1	7	20	
trans-1,4-dichloro-2-butene	.05894	.05589	.05	5	20	
bromoform	.16937	.15589	.1	8	20	
1,1,2,2,-tetrachloroethane	.4575	.48424	.3	-6	20	
1,2,3-trichloropropane	.359	.37617	.05	-5	20	
n-propylbenzene	5.3817	4.9928	.05	7	20	
bromobenzene	.8701	.82847	.05	5	20	
4-ethyltoluene	2.1340	1.8565	.05	13	20	
1,3,5-trimethybenzene	3.7262	3.4490	.05	7	20	
2-chlorotoluene	3.6146	3.3089	.05	8	20	
4-chorotoluene	3.3404	3.0605	.05	8	20	
tert-butylbenzene	3.0713	2.8430	.05	7	20	
1,2,4-trimethylbenzene	3.7510	3.5082	.05	6	20	
sec-butylbenzene	4.6047	4.2337	.05	8	20	
p-isopropyltoluene	3.5701	3.3155	.05	7	20	
1,3-dichlorobenzene	1.8745	1.7452	.6	7	20	
1,4-dichlorobenzene	1.7904	1.7191	.5	4	20	
n-butylbenzene	4.0323	3.7759	.05	6	20	

FORM VII MCP-8260-10

7A
CONTINUING CALIBRATION CHECK

Lab Name: Alpha Analytical Labs

SDG No.: L1016683

Instrument ID: Quimby.i Calibration Date: 28-OCT-2010 Time: 15:59

Lab File ID: 1028N02.D Init. Calib. Date(s): 28-OCT-2 28-OCT-2

Sample No: 8260 CCAL Init. Calib. Times : 07:57 14:29

Compound	RRF	RRF	MIN RRF	%D	MAX %D
1,2,4,5-tetramathylbenezene	.99852	.86334	.05	14	20
1,2-dichlorobenzene	1.5779	1.5088	.4	4	20
p-diethylbenzene	1.3470	1.2010	.05	11	20
1,2-dibromo-3-chloropropane	100	103	.05	-3	20
1,3,5-trichlorobenzene	1.0174	.95592	.01	6	30
1,2,4-trichlorobenzene	.80062	.79054	.2	1	20
hexachlorobutadiene	.39925	.36757	.05	8	20
naphthalene	1.1650	1.2755	.05	-9	20
1,2,3-trichlorobenzene	.59583	.61013	.05	-2	20
dibromofluoromethane	.2204	.21951	.05	0	20
1,2-dichloroethane-d4	.22618	.23653	.05	-5	20
toluene-d8	1.2994	1.3207	.05	-2	20
4-bromofluorobenzene	.89239	.90173	.05	-1	20

FORM VII MCP-8260-10

7A
CONTINUING CALIBRATION CHECK

Lab Name: Alpha Analytical Labs

SDG No.: L1016683

Instrument ID: Quimby.i Calibration Date: 29-OCT-2010 Time: 08:01

Lab File ID: 1029A05.D Init. Calib. Date(s): 28-OCT-2 28-OCT-2

Sample No: 8260 CCAL Init. Calib. Times : 07:57 14:29

Compound	$\overline{RRF}$	RRF	MIN RRF	%D	MAX %D	
dichlorodifluoromethane	.42114	.34729	.1	18	20	
chloromethane	.62163	.54912	.1	12	20	
vinyl chloride	.4285	.35519	.1	17	20	
bromomethane	.32572	.28199	.1	13	20	
chloroethane	.35035	.29898	.1	15	20	
trichlorofluoromethane	.6241	.54214	.1	13	20	
ethyl ether	.13811	.12518	.05	9	20	
acetone	100	93.906	.1	6	20	
1,1,-dichloroethene	.31495	.2853	.1	9	20	
methylene chloride	.34246	.31156	.1	9	20	
carbon disulfide	.90993	.76957	.1	15	20	
methyl tert butyl ether	.48005	.40921	.1	15	20	
trans-1,2-dichloroethene	.36264	.30615	.1	16	20	
Diisopropyl Ether	1.1682	1.0878	.05	7	20	
1,1-dichloroethane	.70419	.6415	.2	9	20	
Ethyl-Tert-Butyl-Ether	.7286	.63288	.05	13	20	
2-butanone	.06714	.06438	.1	4	20	F
2,2-dichloropropane	.34238	.29074	.05	15	20	
cis-1,2-dichloroethene	.37932	.33791	.1	11	20	
chloroform	.61594	.54385	.2	12	20	
bromochloromethane	.12887	.11499	.05	11	20	
tetrahydrofuran	.04454	.03974	.05	11	20	F
1,1,1-trichloroethane	.49271	.38903	.1	21	20	F
1,1-dichloropropene	.52258	.45461	.05	13	20	
carbontetrachloride	.35402	.26742	.1	24	20	F
Tertiary-Amyl Methyl Ether	.46697	.40729	.05	13	20	
1,2-dichloroethane	.39579	.3438	.1	13	20	
benzene	1.5397	1.4002	.5	9	20	
trichloroethene	.37211	.32747	.2	12	20	
1,2-dichloropropane	.35603	.31873	.1	10	20	
bromodichloromethane	.35384	.26559	.2	25	20	F
1,4-dioxane	.00109	.00102	.05	6	20	F
dibromomethane	.12703	.11928	.05	6	20	
4-methyl-2-pentanone	.04832	.04163	.1	14	20	F
cis-1,3-dichloropropene	.41611	.29799	.2	28	20	F
toluene	1.2794	1.1771	.4	8	20	
trans-1,3-dichloropropene	.38217	.28201	.1	26	20	F
1,1,2-trichloroethane	.21745	.20458	.1	6	20	

FORM VII MCP-8260-10

7A
CONTINUING CALIBRATION CHECK

Lab Name: Alpha Analytical Labs

SDG No.: L1016683

Instrument ID: Quimby.i Calibration Date: 29-OCT-2010 Time: 08:01

Lab File ID: 1029A05.D Init. Calib. Date(s): 28-OCT-2 28-OCT-2

Sample No: 8260 CCAL Init. Calib. Times : 07:57 14:29

Compound	RRF	RRF	MIN RRF	%D	MAX %D	
2-hexanone	.12616	.11329	.1	10	20	
1,3-dichloropropane	.48008	.46309	.05	4	20	
tetrachloroethene	.50656	.46529	.2	8	20	
chlorodibromomethane	.22898	.15893	.1	31	20	F
1,2-dibromoethane	.21845	.19422	.1	11	20	
chlorobenzene	1.3784	1.2274	.5	11	20	
1,1,1,2-tetrachloroethane	.33964	.26352	.05	22	20	F
ethyl benzene	2.6402	2.4944	.1	6	20	
p/m xylene	1.0415	.98747	.1	5	20	
o xylene	.99264	.91537	.3	8	20	
styrene	1.5901	1.4299	.31	10	20	
isopropylbenzene	2.7063	2.5167	.1	7	20	
bromoform	.16937	.11553	.1	32	20	F
1,1,2,2,-tetrachloroethane	.4575	.42444	.3	7	20	
1,2,3-trichloropropane	.359	.33525	.05	7	20	
n-propylbenzene	5.3817	5.1409	.05	4	20	
bromobenzene	.8701	.79837	.05	8	20	
1,3,5-trimethybenzene	3.7262	3.4082	.05	9	20	
2-chlorotoluene	3.6146	3.3533	.05	7	20	
4-chorotoluene	3.3404	3.0998	.05	7	20	
tert-butylbenzene	3.0713	2.8628	.05	7	20	
1,2,4-trimethylbenzene	3.7510	3.5904	.05	4	20	
sec-butylbenzene	4.6047	4.3141	.05	6	20	
p-isopropyltoluene	3.5701	3.4945	.05	2	20	
1,3-dichlorobenzene	1.8745	1.7054	.6	9	20	
1,4-dichlorobenzene	1.7904	1.7292	.5	3	20	
n-butylbenzene	4.0323	3.1564	.05	22	20	F
1,2-dichlorobenzene	1.5779	1.4613	.4	7	20	
1,2-dibromo-3-chloropropane	100	78.931	.05	21	20	F
1,2,4-trichlorobenzene	.80062	.71675	.2	10	20	
hexachlorobutadiene	.39925	.35952	.05	10	20	
naphthalene	1.1650	1.0794	.05	7	20	
1,2,3-trichlorobenzene	.59583	.54459	.05	9	20	
dibromofluoromethane	.2204	.21429	.05	3	20	
1,2-dichloroethane-d4	.22618	.21789	.05	4	20	
toluene-d8	1.2994	1.3451	.05	-4	20	
4-bromofluorobenzene	.89239	.89162	.05	0	20	

FORM VII MCP-8260-10

ANALYTICAL REPORT

Lab Number:	L1013968
Client:	TRC Environmental Consultants Wannalancit Mills 650 Suffolk Street Lowell, MA 01854
ATTN:	David Sullivan
Phone:	(978) 656-3565
Project Name:	CITY OF NEW BEDFORD
Project Number:	115058
Report Date:	09/16/10

Certifications & Approvals: MA (M-MA086), NY NELAC (11148), CT (PH-0574), NH (2003), NJ (MA935), RI (LAO00065), ME (MA0086), PA (Registration #68-03671), USDA (Permit #S-72578), US Army Corps of Engineers, Naval FESC.

Eight Walkup Drive, Westborough, MA 01581-1019
508-898-9220 (Fax) 508-898-9193 800-624-9220 - www.alphalab.com

Project Name: CITY OF NEW BEDFORD
Project Number: 115058

Lab Number: L1013968
Report Date: 09/16/10

Alpha Sample ID	Client ID	Sample Location	Collection Date/Time
L1013968-01	MW-25	NBHS	09/08/10 10:45
L1013968-02	MW-26	NBHS	09/08/10 13:20
L1013968-03	MW-7	NBHS	09/09/10 12:35
L1013968-04	MW-27	NBHS	09/09/10 13:00
L1013968-05	TRIP BLANK	NBHS	09/08/10 00:00

Project Name: CITY OF NEW BEDFORD **Lab Number:** L1013968

Project Number: 115058 **Report Date:** 09/16/10

MADEP MCP Response Action Analytical Report Certification

This form provides certifications for all samples performed by MCP methods. Please refer to the Sample Results and Container Information sections of this report for specification of MCP methods used for each analysis. The following questions pertain only to MCP Analytical Methods.

An affirmative response to questions A through F is required for "Presumptive Certainty" status		
A	Were all samples received in a condition consistent with those described on the Chain-of-Custody, properly preserved (including temperature) in the field or laboratory, and prepared/analyzed within method holding times?	YES
B	Were the analytical method(s) and all associated QC requirements specified in the selected CAM protocol(s) followed?	YES
C	Were all required corrective actions and analytical response actions specified in the selected CAM protocol(s) implemented for all identified performance standard non-conformances?	YES
D	Does the laboratory report comply with all the reporting requirements specified in CAM VII A, "Quality Assurance and Quality Control Guidelines for the Acquisition and Reporting of Analytical Data?"	YES
E a	VPH, EPH, and APH Methods only: Was each method conducted without significant modification(s)? (Refer to the individual method(s) for a list of significant modifications).	N/A
E b	APH and TO-15 Methods only: Was the complete analyte list reported for each method?	N/A
F	Were all applicable CAM protocol QC and performance standard non-conformances identified and evaluated in a laboratory narrative (including all "No" responses to Questions A through E)?	YES

A response to questions G, H and I is required for "Presumptive Certainty" status		
G	Were the reporting limits at or below all CAM reporting limits specified in the selected CAM protocol(s)?	NO
H	Were all QC performance standards specified in the CAM protocol(s) achieved?	NO
I	Were results reported for the complete analyte list specified in the selected CAM protocol(s)?	YES

For any questions answered "No", please refer to the case narrative section on the following page(s).

Please note that sample matrix information is located in the Sample Results section of this report.

Project Name: CITY OF NEW BEDFORD **Lab Number:** L1013968
Project Number: 115058 **Report Date:** 09/16/10

Case Narrative

The samples were received in accordance with the Chain of Custody and no significant deviations were encountered during the preparation or analysis unless otherwise noted. Sample Receipt, Container Information, and the Chain of Custody are located at the back of the report.

Results contained within this report relate only to the samples submitted under this Alpha Lab Number and meet all of the requirements of NELAC, for all NELAC accredited parameters. The data presented in this report is organized by parameter (i.e. VOC, SVOC, etc.). Sample specific Quality Control data (i.e. Surrogate Spike Recovery) is reported at the end of the target analyte list for each individual sample, followed by the Laboratory Batch Quality Control at the end of each parameter. If a sample was re-analyzed or re-extracted due to a required quality control corrective action and if both sets of data are reported, the Laboratory ID of the re-analysis or re-extraction is designated with an "R" or "RE", respectively. When multiple Batch Quality Control elements are reported (e.g. more than one LCS), the associated samples for each element are noted in the grey shaded header line of each data table. Any Laboratory Batch, Sample Specific % recovery or RPD value that is outside the listed Acceptance Criteria is bolded in the report. Definitions of all data qualifiers and acronyms used in this report are provided in the Glossary located at the back of the report.

Please see the associated ADEx data file for a comparison of laboratory reporting limits that were achieved with the regulatory Numerical Standards requested on the Chain of Custody.

For additional information, please contact Client Services at 800-624-9220.

MCP Related Narratives

Volatile Organics

L1013968-04 has elevated detection limits due to the dilution required by the elevated concentrations of target compounds in the sample.

In reference to question G:

L1013698-01, -02, -03 and -05: The requested CAM reporting limits were not achieved for Tetrahydrofuran.

L1013698-04: The requested CAM reporting limits were not achieved for Methylene chloride, 1,1-Dichloroethane, Chloroform, Carbon tetrachloride, 1,2-Dichloropropane, Dibromochloromethane, 1,1,2-Trichloroethane, Tetrachloroethene, Chlorobenzene, Trichlorofluoromethane, 1,2-Dichloroethane, 1,1,1-Trichloroethane, Bromodichloromethane, trans-1,3-Dichloropropene, cis-1,3-Dichloropropene, 1,1-Dichloropropene, Bromoform, 1,1,2,2-Tetrachloroethane, Benzene, Toluene, Ethylbenzene, Chloromethane,

Project Name:	CITY OF NEW BEDFORD	**Lab Number:**	L1013968
Project Number:	115058	**Report Date:**	09/16/10

Case Narrative (continued)

Bromomethane, Chloroethane, 1,1-Dichloroethene, 1,2-Dichlorobenzene, 1,3-Dichlorobenzene, 1,4-Dichlorobenzene, Methyl tert butyl ether, p/m-Xylene, o-Xylene, Dibromomethane, 1,2,3-Trichloropropane, Styrene, Dichlorodifluoromethane, Acetone, Carbon disulfide, 2-Butanone, 4-Methyl-2-pentanone, 2-Hexanone, Bromochloromethane, Tetrahydrofuran, 2,2-Dichloropropane, 1,2-Dibromoethane, 1,3-Dichloropropane, 1,1,1,2-Tetrachloroethane, Bromobenzene, n-Butylbenzene, sec-Butylbenzene, tert-Butylbenzene, o-Chlorotoluene, p-Chlorotoluene, 1,2-Dibromo-3-chloropropane, Hexachlorobutadiene, Isopropylbenzene, p-Isopropyltoluene, Naphthalene, n-Propylbenzene, 1,2,3-Trichlorobenzene, 1,2,4-Trichlorobenzene, 1,3,5-Trimethylbenzene, 1,2,4-Trimethylbenzene, Ethyl ether, Isopropyl Ether, Ethyl-Tert-Butyl-Ether, Tertiary-Amyl Methyl Ether and 1,4-Dioxane.

In reference to question H:

The WG432277-1 LCS recovery, associated with L1013968-01 through -05, is below the acceptance criteria for Carbon disulfide (68%); however, it has been identified as a "difficult" analyte and is within the 40-160% acceptance limits. The results of the associated samples are reported; however, all results are considered to have a potentially low bias for this compound.

The WG432277-1 LCS recovery, associated with L1013968-01 through -05, is below the individual acceptance criteria for Chloroethane (68%), but within the overall method allowances. The results of the associated samples are reported; however, all results are considered to have a potentially low bias for this compound.

The WG432277-1/-2 LCS/LCSD RPD, associated with L1013968-01 through -05, is above the acceptance criteria for 2-Butanone (22%); however, the individual LCS/LCSD recoveries are within method limits.

The initial calibration, associated with L1013968-01 through -05, did not meet the method required minimum response factor for 4-Methyl-2-pentanone, Acetone and 1,4-Dioxane and utilized a quadratic fit for 1,1,1,2-Tetrachloroethane and Bromoform.

The continuing calibration standard, associated with L1013968-01 through -05, is outside the acceptance criteria for several compounds; however, it is within overall method allowances. A copy of the continuing calibration standard is included as an addendum to this report.

Project Name: CITY OF NEW BEDFORD **Lab Number:** L1013968
Project Number: 115058 **Report Date:** 09/16/10

Case Narrative (continued)

Non-MCP Related Narratives

Total Organic Carbon

The WG432722-3 MS recovery (121%), performed on L1013968-04, is above the acceptance criteria. This has been attributed to matrix interference.

I, the undersigned, attest under the pains and penalties of perjury that, to the best of my knowledge and belief and based upon my personal inquiry of those responsible for providing the information contained in this analytical report, such information is accurate and complete. This certificate of analysis is not complete unless this page accompanies any and all pages of this report.

Authorized Signature: Michelle M. Morris

Title: Technical Director/Representative Date: 09/16/10

ORGANICS

VOLATILES

Project Name: CITY OF NEW BEDFORD **Lab Number:** L1013968

Project Number: 115058 **Report Date:** 09/16/10

SAMPLE RESULTS

Lab ID:	L1013968-01	Date Collected:	09/08/10 10:45
Client ID:	MW-25	Date Received:	09/09/10
Sample Location:	NBHS	Field Prep:	Not Specified
Matrix:	Water		
Analytical Method:	97,8260B		
Analytical Date:	09/13/10 11:40		
Analyst:	MM		

Parameter	Result	Qualifier	Units	RL	MDL	Dilution Factor
MCP Volatile Organics - Westborough Lab						
Methylene chloride	ND		ug/l	2.0	--	1
1,1-Dichloroethane	ND		ug/l	1.0	--	1
Chloroform	ND		ug/l	1.0	--	1
Carbon tetrachloride	ND		ug/l	1.0	--	1
1,2-Dichloropropane	ND		ug/l	1.0	--	1
Dibromochloromethane	ND		ug/l	1.0	--	1
1,1,2-Trichloroethane	ND		ug/l	1.0	--	1
Tetrachloroethene	ND		ug/l	1.0	--	1
Chlorobenzene	ND		ug/l	1.0	--	1
Trichlorofluoromethane	ND		ug/l	2.0	--	1
1,2-Dichloroethane	ND		ug/l	1.0	--	1
1,1,1-Trichloroethane	ND		ug/l	1.0	--	1
Bromodichloromethane	ND		ug/l	1.0	--	1
trans-1,3-Dichloropropene	ND		ug/l	0.50	--	1
cis-1,3-Dichloropropene	ND		ug/l	0.50	--	1
1,1-Dichloropropene	ND		ug/l	2.0	--	1
Bromoform	ND		ug/l	2.0	--	1
1,1,2,2-Tetrachloroethane	ND		ug/l	1.0	--	1
Benzene	ND		ug/l	1.0	--	1
Toluene	ND		ug/l	1.0	--	1
Ethylbenzene	ND		ug/l	1.0	--	1
Chloromethane	ND		ug/l	2.0	--	1
Bromomethane	ND		ug/l	2.0	--	1
Vinyl chloride	ND		ug/l	1.0	--	1
Chloroethane	ND		ug/l	2.0	--	1
1,1-Dichloroethene	ND		ug/l	1.0	--	1
trans-1,2-Dichloroethene	ND		ug/l	1.0	--	1
Trichloroethene	ND		ug/l	1.0	--	1
1,2-Dichlorobenzene	ND		ug/l	1.0	--	1
1,3-Dichlorobenzene	ND		ug/l	1.0	--	1

Project Name: CITY OF NEW BEDFORD **Lab Number:** L1013968

Project Number: 115058 **Report Date:** 09/16/10

SAMPLE RESULTS

Lab ID: L1013968-01 Date Collected: 09/08/10 10:45

Client ID: MW-25 Date Received: 09/09/10

Sample Location: NBHS Field Prep: Not Specified

Parameter	Result	Qualifier	Units	RL	MDL	Dilution Factor
MCP Volatile Organics - Westborough Lab						
1,4-Dichlorobenzene	ND		ug/l	1.0	--	1
Methyl tert butyl ether	ND		ug/l	2.0	--	1
p/m-Xylene	ND		ug/l	2.0	--	1
o-Xylene	ND		ug/l	1.0	--	1
cis-1,2-Dichloroethene	ND		ug/l	1.0	--	1
Dibromomethane	ND		ug/l	2.0	--	1
1,2,3-Trichloropropane	ND		ug/l	2.0	--	1
Styrene	ND		ug/l	1.0	--	1
Dichlorodifluoromethane	ND		ug/l	2.0	--	1
Acetone	ND		ug/l	5.0	--	1
Carbon disulfide	ND		ug/l	2.0	--	1
2-Butanone	ND		ug/l	5.0	--	1
4-Methyl-2-pentanone	ND		ug/l	5.0	--	1
2-Hexanone	ND		ug/l	5.0	--	1
Bromochloromethane	ND		ug/l	2.0	--	1
Tetrahydrofuran	ND		ug/l	10	--	1
2,2-Dichloropropane	ND		ug/l	2.0	--	1
1,2-Dibromoethane	ND		ug/l	2.0	--	1
1,3-Dichloropropane	ND		ug/l	2.0	--	1
1,1,1,2-Tetrachloroethane	ND		ug/l	1.0	--	1
Bromobenzene	ND		ug/l	2.0	--	1
n-Butylbenzene	ND		ug/l	2.0	--	1
sec-Butylbenzene	ND		ug/l	2.0	--	1
tert-Butylbenzene	ND		ug/l	2.0	--	1
o-Chlorotoluene	ND		ug/l	2.0	--	1
p-Chlorotoluene	ND		ug/l	2.0	--	1
1,2-Dibromo-3-chloropropane	ND		ug/l	2.0	--	1
Hexachlorobutadiene	ND		ug/l	0.60	--	1
Isopropylbenzene	ND		ug/l	2.0	--	1
p-Isopropyltoluene	ND		ug/l	2.0	--	1
Naphthalene	ND		ug/l	5.0	--	1
n-Propylbenzene	ND		ug/l	2.0	--	1
1,2,3-Trichlorobenzene	ND		ug/l	2.0	--	1
1,2,4-Trichlorobenzene	ND		ug/l	2.0	--	1
1,3,5-Trimethylbenzene	ND		ug/l	2.0	--	1
1,2,4-Trimethylbenzene	ND		ug/l	2.0	--	1
Ethyl ether	ND		ug/l	2.0	--	1

Project Name: CITY OF NEW BEDFORD **Lab Number:** L1013968

Project Number: 115058 **Report Date:** 09/16/10

SAMPLE RESULTS

Lab ID:	L1013968-01	Date Collected:	09/08/10 10:45
Client ID:	MW-25	Date Received:	09/09/10
Sample Location:	NBHS	Field Prep:	Not Specified

Parameter	Result	Qualifier	Units	RL	MDL	Dilution Factor
MCP Volatile Organics - Westborough Lab						
Isopropyl Ether	ND		ug/l	2.0	--	1
Ethyl-Tert-Butyl-Ether	ND		ug/l	2.0	--	1
Tertiary-Amyl Methyl Ether	ND		ug/l	2.0	--	1
1,4-Dioxane	ND		ug/l	250	--	1

Surrogate	% Recovery	Qualifier	Acceptance Criteria
1,2-Dichloroethane-d4	96		70-130
Toluene-d8	101		70-130
4-Bromofluorobenzene	108		70-130
Dibromofluoromethane	109		70-130

Project Name: CITY OF NEW BEDFORD **Lab Number:** L1013968

Project Number: 115058 **Report Date:** 09/16/10

SAMPLE RESULTS

Lab ID:	L1013968-02	Date Collected:	09/08/10 13:20
Client ID:	MW-26	Date Received:	09/09/10
Sample Location:	NBHS	Field Prep:	Not Specified
Matrix:	Water		
Analytical Method:	97,8260B		
Analytical Date:	09/13/10 12:13		
Analyst:	MM		

Parameter	Result	Qualifier	Units	RL	MDL	Dilution Factor
MCP Volatile Organics - Westborough Lab						
Methylene chloride	ND		ug/l	2.0	--	1
1,1-Dichloroethane	ND		ug/l	1.0	--	1
Chloroform	ND		ug/l	1.0	--	1
Carbon tetrachloride	ND		ug/l	1.0	--	1
1,2-Dichloropropane	ND		ug/l	1.0	--	1
Dibromochloromethane	ND		ug/l	1.0	--	1
1,1,2-Trichloroethane	ND		ug/l	1.0	--	1
Tetrachloroethene	ND		ug/l	1.0	--	1
Chlorobenzene	ND		ug/l	1.0	--	1
Trichlorofluoromethane	ND		ug/l	2.0	--	1
1,2-Dichloroethane	ND		ug/l	1.0	--	1
1,1,1-Trichloroethane	ND		ug/l	1.0	--	1
Bromodichloromethane	ND		ug/l	1.0	--	1
trans-1,3-Dichloropropene	ND		ug/l	0.50	--	1
cis-1,3-Dichloropropene	ND		ug/l	0.50	--	1
1,1-Dichloropropene	ND		ug/l	2.0	--	1
Bromoform	ND		ug/l	2.0	--	1
1,1,2,2-Tetrachloroethane	ND		ug/l	1.0	--	1
Benzene	ND		ug/l	1.0	--	1
Toluene	ND		ug/l	1.0	--	1
Ethylbenzene	ND		ug/l	1.0	--	1
Chloromethane	ND		ug/l	2.0	--	1
Bromomethane	ND		ug/l	2.0	--	1
Vinyl chloride	ND		ug/l	1.0	--	1
Chloroethane	ND		ug/l	2.0	--	1
1,1-Dichloroethene	ND		ug/l	1.0	--	1
trans-1,2-Dichloroethene	ND		ug/l	1.0	--	1
Trichloroethene	ND		ug/l	1.0	--	1
1,2-Dichlorobenzene	ND		ug/l	1.0	--	1
1,3-Dichlorobenzene	ND		ug/l	1.0	--	1

Project Name: CITY OF NEW BEDFORD **Lab Number:** L1013968

Project Number: 115058 **Report Date:** 09/16/10

SAMPLE RESULTS

Lab ID: L1013968-02 Date Collected: 09/08/10 13:20

Client ID: MW-26 Date Received: 09/09/10

Sample Location: NBHS Field Prep: Not Specified

Parameter	Result	Qualifier	Units	RL	MDL	Dilution Factor
MCP Volatile Organics - Westborough Lab						
1,4-Dichlorobenzene	ND		ug/l	1.0	--	1
Methyl tert butyl ether	ND		ug/l	2.0	--	1
p/m-Xylene	ND		ug/l	2.0	--	1
o-Xylene	ND		ug/l	1.0	--	1
cis-1,2-Dichloroethene	ND		ug/l	1.0	--	1
Dibromomethane	ND		ug/l	2.0	--	1
1,2,3-Trichloropropane	ND		ug/l	2.0	--	1
Styrene	ND		ug/l	1.0	--	1
Dichlorodifluoromethane	ND		ug/l	2.0	--	1
Acetone	ND		ug/l	5.0	--	1
Carbon disulfide	ND		ug/l	2.0	--	1
2-Butanone	ND		ug/l	5.0	--	1
4-Methyl-2-pentanone	ND		ug/l	5.0	--	1
2-Hexanone	ND		ug/l	5.0	--	1
Bromochloromethane	ND		ug/l	2.0	--	1
Tetrahydrofuran	ND		ug/l	10	--	1
2,2-Dichloropropane	ND		ug/l	2.0	--	1
1,2-Dibromoethane	ND		ug/l	2.0	--	1
1,3-Dichloropropane	ND		ug/l	2.0	--	1
1,1,1,2-Tetrachloroethane	ND		ug/l	1.0	--	1
Bromobenzene	ND		ug/l	2.0	--	1
n-Butylbenzene	ND		ug/l	2.0	--	1
sec-Butylbenzene	ND		ug/l	2.0	--	1
tert-Butylbenzene	ND		ug/l	2.0	--	1
o-Chlorotoluene	ND		ug/l	2.0	--	1
p-Chlorotoluene	ND		ug/l	2.0	--	1
1,2-Dibromo-3-chloropropane	ND		ug/l	2.0	--	1
Hexachlorobutadiene	ND		ug/l	0.60	--	1
Isopropylbenzene	ND		ug/l	2.0	--	1
p-Isopropyltoluene	ND		ug/l	2.0	--	1
Naphthalene	ND		ug/l	5.0	--	1
n-Propylbenzene	ND		ug/l	2.0	--	1
1,2,3-Trichlorobenzene	ND		ug/l	2.0	--	1
1,2,4-Trichlorobenzene	ND		ug/l	2.0	--	1
1,3,5-Trimethylbenzene	ND		ug/l	2.0	--	1
1,2,4-Trimethylbenzene	ND		ug/l	2.0	--	1
Ethyl ether	ND		ug/l	2.0	--	1

Project Name: CITY OF NEW BEDFORD **Lab Number:** L1013968

Project Number: 115058 **Report Date:** 09/16/10

SAMPLE RESULTS

Lab ID:	L1013968-02	Date Collected:	09/08/10 13:20
Client ID:	MW-26	Date Received:	09/09/10
Sample Location:	NBHS	Field Prep:	Not Specified

Parameter	Result	Qualifier	Units	RL	MDL	Dilution Factor
MCP Volatile Organics - Westborough Lab						
Isopropyl Ether	ND		ug/l	2.0	--	1
Ethyl-Tert-Butyl-Ether	ND		ug/l	2.0	--	1
Tertiary-Amyl Methyl Ether	ND		ug/l	2.0	--	1
1,4-Dioxane	ND		ug/l	250	--	1

Surrogate	% Recovery	Qualifier	Acceptance Criteria
1,2-Dichloroethane-d4	95		70-130
Toluene-d8	97		70-130
4-Bromofluorobenzene	111		70-130
Dibromofluoromethane	110		70-130

Project Name: CITY OF NEW BEDFORD **Lab Number:** L1013968

Project Number: 115058 **Report Date:** 09/16/10

SAMPLE RESULTS

Lab ID:	L1013968-03	Date Collected:	09/09/10 12:35
Client ID:	MW-7	Date Received:	09/09/10
Sample Location:	NBHS	Field Prep:	Not Specified
Matrix:	Water		
Analytical Method:	97,8260B		
Analytical Date:	09/13/10 12:45		
Analyst:	MM		

Parameter	Result	Qualifier	Units	RL	MDL	Dilution Factor
MCP Volatile Organics - Westborough Lab						
Methylene chloride	ND		ug/l	2.0	--	1
1,1-Dichloroethane	ND		ug/l	1.0	--	1
Chloroform	ND		ug/l	1.0	--	1
Carbon tetrachloride	ND		ug/l	1.0	--	1
1,2-Dichloropropane	ND		ug/l	1.0	--	1
Dibromochloromethane	ND		ug/l	1.0	--	1
1,1,2-Trichloroethane	ND		ug/l	1.0	--	1
Tetrachloroethene	25		ug/l	1.0	--	1
Chlorobenzene	ND		ug/l	1.0	--	1
Trichlorofluoromethane	ND		ug/l	2.0	--	1
1,2-Dichloroethane	ND		ug/l	1.0	--	1
1,1,1-Trichloroethane	ND		ug/l	1.0	--	1
Bromodichloromethane	ND		ug/l	1.0	--	1
trans-1,3-Dichloropropene	ND		ug/l	0.50	--	1
cis-1,3-Dichloropropene	ND		ug/l	0.50	--	1
1,1-Dichloropropene	ND		ug/l	2.0	--	1
Bromoform	ND		ug/l	2.0	--	1
1,1,2,2-Tetrachloroethane	ND		ug/l	1.0	--	1
Benzene	ND		ug/l	1.0	--	1
Toluene	ND		ug/l	1.0	--	1
Ethylbenzene	ND		ug/l	1.0	--	1
Chloromethane	ND		ug/l	2.0	--	1
Bromomethane	ND		ug/l	2.0	--	1
Vinyl chloride	1.4		ug/l	1.0	--	1
Chloroethane	ND		ug/l	2.0	--	1
1,1-Dichloroethene	ND		ug/l	1.0	--	1
trans-1,2-Dichloroethene	ND		ug/l	1.0	--	1
Trichloroethene	14		ug/l	1.0	--	1
1,2-Dichlorobenzene	ND		ug/l	1.0	--	1
1,3-Dichlorobenzene	ND		ug/l	1.0	--	1

Project Name: CITY OF NEW BEDFORD **Lab Number:** L1013968

Project Number: 115058 **Report Date:** 09/16/10

SAMPLE RESULTS

Lab ID: L1013968-03 Date Collected: 09/09/10 12:35

Client ID: MW-7 Date Received: 09/09/10

Sample Location: NBHS Field Prep: Not Specified

Parameter	Result	Qualifier	Units	RL	MDL	Dilution Factor
MCP Volatile Organics - Westborough Lab						
1,4-Dichlorobenzene	ND		ug/l	1.0	--	1
Methyl tert butyl ether	ND		ug/l	2.0	--	1
p/m-Xylene	ND		ug/l	2.0	--	1
o-Xylene	ND		ug/l	1.0	--	1
cis-1,2-Dichloroethene	47		ug/l	1.0	--	1
Dibromomethane	ND		ug/l	2.0	--	1
1,2,3-Trichloropropane	ND		ug/l	2.0	--	1
Styrene	ND		ug/l	1.0	--	1
Dichlorodifluoromethane	ND		ug/l	2.0	--	1
Acetone	ND		ug/l	5.0	--	1
Carbon disulfide	ND		ug/l	2.0	--	1
2-Butanone	ND		ug/l	5.0	--	1
4-Methyl-2-pentanone	ND		ug/l	5.0	--	1
2-Hexanone	ND		ug/l	5.0	--	1
Bromochloromethane	ND		ug/l	2.0	--	1
Tetrahydrofuran	ND		ug/l	10	--	1
2,2-Dichloropropane	ND		ug/l	2.0	--	1
1,2-Dibromoethane	ND		ug/l	2.0	--	1
1,3-Dichloropropane	ND		ug/l	2.0	--	1
1,1,1,2-Tetrachloroethane	ND		ug/l	1.0	--	1
Bromobenzene	ND		ug/l	2.0	--	1
n-Butylbenzene	ND		ug/l	2.0	--	1
sec-Butylbenzene	ND		ug/l	2.0	--	1
tert-Butylbenzene	ND		ug/l	2.0	--	1
o-Chlorotoluene	ND		ug/l	2.0	--	1
p-Chlorotoluene	ND		ug/l	2.0	--	1
1,2-Dibromo-3-chloropropane	ND		ug/l	2.0	--	1
Hexachlorobutadiene	ND		ug/l	0.60	--	1
Isopropylbenzene	ND		ug/l	2.0	--	1
p-Isopropyltoluene	ND		ug/l	2.0	--	1
Naphthalene	ND		ug/l	5.0	--	1
n-Propylbenzene	ND		ug/l	2.0	--	1
1,2,3-Trichlorobenzene	ND		ug/l	2.0	--	1
1,2,4-Trichlorobenzene	ND		ug/l	2.0	--	1
1,3,5-Trimethylbenzene	ND		ug/l	2.0	--	1
1,2,4-Trimethylbenzene	ND		ug/l	2.0	--	1
Ethyl ether	ND		ug/l	2.0	--	1

Project Name: CITY OF NEW BEDFORD **Lab Number:** L1013968

Project Number: 115058 **Report Date:** 09/16/10

SAMPLE RESULTS

Lab ID:	L1013968-03	Date Collected:	09/09/10 12:35
Client ID:	MW-7	Date Received:	09/09/10
Sample Location:	NBHS	Field Prep:	Not Specified

Parameter	Result	Qualifier	Units	RL	MDL	Dilution Factor
MCP Volatile Organics - Westborough Lab						
Isopropyl Ether	ND		ug/l	2.0	--	1
Ethyl-Tert-Butyl-Ether	ND		ug/l	2.0	--	1
Tertiary-Amyl Methyl Ether	ND		ug/l	2.0	--	1
1,4-Dioxane	ND		ug/l	250	--	1

Surrogate	% Recovery	Qualifier	Acceptance Criteria
1,2-Dichloroethane-d4	95		70-130
Toluene-d8	98		70-130
4-Bromofluorobenzene	108		70-130
Dibromofluoromethane	106		70-130

Project Name: CITY OF NEW BEDFORD **Lab Number:** L1013968

Project Number: 115058 **Report Date:** 09/16/10

SAMPLE RESULTS

Lab ID:	L1013968-04	D	Date Collected:	09/09/10 13:00
Client ID:	MW-27		Date Received:	09/09/10
Sample Location:	NBHS		Field Prep:	Not Specified
Matrix:	Water			
Analytical Method:	97,8260B			
Analytical Date:	09/13/10 13:17			
Analyst:	MM			

Parameter	Result	Qualifier	Units	RL	MDL	Dilution Factor
MCP Volatile Organics - Westborough Lab						
Methylene chloride	ND		ug/l	800	--	400
1,1-Dichloroethane	ND		ug/l	400	--	400
Chloroform	ND		ug/l	400	--	400
Carbon tetrachloride	ND		ug/l	400	--	400
1,2-Dichloropropane	ND		ug/l	400	--	400
Dibromochloromethane	ND		ug/l	400	--	400
1,1,2-Trichloroethane	ND		ug/l	400	--	400
Tetrachloroethene	ND		ug/l	400	--	400
Chlorobenzene	ND		ug/l	400	--	400
Trichlorofluoromethane	ND		ug/l	800	--	400
1,2-Dichloroethane	ND		ug/l	400	--	400
1,1,1-Trichloroethane	ND		ug/l	400	--	400
Bromodichloromethane	ND		ug/l	400	--	400
trans-1,3-Dichloropropene	ND		ug/l	200	--	400
cis-1,3-Dichloropropene	ND		ug/l	200	--	400
1,1-Dichloropropene	ND		ug/l	800	--	400
Bromoform	ND		ug/l	800	--	400
1,1,2,2-Tetrachloroethane	ND		ug/l	400	--	400
Benzene	ND		ug/l	400	--	400
Toluene	ND		ug/l	400	--	400
Ethylbenzene	ND		ug/l	400	--	400
Chloromethane	ND		ug/l	800	--	400
Bromomethane	ND		ug/l	800	--	400
Vinyl chloride	550		ug/l	400	--	400
Chloroethane	ND		ug/l	800	--	400
1,1-Dichloroethene	ND		ug/l	400	--	400
trans-1,2-Dichloroethene	700		ug/l	400	--	400
Trichloroethene	31000		ug/l	400	--	400
1,2-Dichlorobenzene	ND		ug/l	400	--	400
1,3-Dichlorobenzene	ND		ug/l	400	--	400

Project Name: CITY OF NEW BEDFORD **Lab Number:** L1013968

Project Number: 115058 **Report Date:** 09/16/10

SAMPLE RESULTS

Lab ID: L1013968-04 D Date Collected: 09/09/10 13:00

Client ID: MW-27 Date Received: 09/09/10

Sample Location: NBHS Field Prep: Not Specified

Parameter	Result	Qualifier	Units	RL	MDL	Dilution Factor
MCP Volatile Organics - Westborough Lab						
1,4-Dichlorobenzene	ND		ug/l	400	--	400
Methyl tert butyl ether	ND		ug/l	800	--	400
p/m-Xylene	ND		ug/l	800	--	400
o-Xylene	ND		ug/l	400	--	400
cis-1,2-Dichloroethene	4100		ug/l	400	--	400
Dibromomethane	ND		ug/l	800	--	400
1,2,3-Trichloropropane	ND		ug/l	800	--	400
Styrene	ND		ug/l	400	--	400
Dichlorodifluoromethane	ND		ug/l	800	--	400
Acetone	ND		ug/l	2000	--	400
Carbon disulfide	ND		ug/l	800	--	400
2-Butanone	ND		ug/l	2000	--	400
4-Methyl-2-pentanone	ND		ug/l	2000	--	400
2-Hexanone	ND		ug/l	2000	--	400
Bromochloromethane	ND		ug/l	800	--	400
Tetrahydrofuran	ND		ug/l	4000	--	400
2,2-Dichloropropane	ND		ug/l	800	--	400
1,2-Dibromoethane	ND		ug/l	800	--	400
1,3-Dichloropropane	ND		ug/l	800	--	400
1,1,1,2-Tetrachloroethane	ND		ug/l	400	--	400
Bromobenzene	ND		ug/l	800	--	400
n-Butylbenzene	ND		ug/l	800	--	400
sec-Butylbenzene	ND		ug/l	800	--	400
tert-Butylbenzene	ND		ug/l	800	--	400
o-Chlorotoluene	ND		ug/l	800	--	400
p-Chlorotoluene	ND		ug/l	800	--	400
1,2-Dibromo-3-chloropropane	ND		ug/l	800	--	400
Hexachlorobutadiene	ND		ug/l	240	--	400
Isopropylbenzene	ND		ug/l	800	--	400
p-Isopropyltoluene	ND		ug/l	800	--	400
Naphthalene	ND		ug/l	2000	--	400
n-Propylbenzene	ND		ug/l	800	--	400
1,2,3-Trichlorobenzene	ND		ug/l	800	--	400
1,2,4-Trichlorobenzene	ND		ug/l	800	--	400
1,3,5-Trimethylbenzene	ND		ug/l	800	--	400
1,2,4-Trimethylbenzene	ND		ug/l	800	--	400
Ethyl ether	ND		ug/l	800	--	400

Project Name: CITY OF NEW BEDFORD **Lab Number:** L1013968

Project Number: 115058 **Report Date:** 09/16/10

SAMPLE RESULTS

Lab ID:	L1013968-04	D	Date Collected:	09/09/10 13:00
Client ID:	MW-27		Date Received:	09/09/10
Sample Location:	NBHS		Field Prep:	Not Specified

Parameter	Result	Qualifier	Units	RL	MDL	Dilution Factor
MCP Volatile Organics - Westborough Lab						
Isopropyl Ether	ND		ug/l	800	--	400
Ethyl-Tert-Butyl-Ether	ND		ug/l	800	--	400
Tertiary-Amyl Methyl Ether	ND		ug/l	800	--	400
1,4-Dioxane	ND		ug/l	100000	--	400

Surrogate	% Recovery	Qualifier	Acceptance Criteria
1,2-Dichloroethane-d4	96		70-130
Toluene-d8	97		70-130
4-Bromofluorobenzene	105		70-130
Dibromofluoromethane	108		70-130

Project Name: CITY OF NEW BEDFORD **Lab Number:** L1013968

Project Number: 115058 **Report Date:** 09/16/10

SAMPLE RESULTS

Lab ID:	L1013968-05	Date Collected:	09/08/10 00:00
Client ID:	TRIP BLANK	Date Received:	09/09/10
Sample Location:	NBHS	Field Prep:	Not Specified
Matrix:	Water		
Analytical Method:	97,8260B		
Analytical Date:	09/13/10 13:49		
Analyst:	MM		

Parameter	Result	Qualifier	Units	RL	MDL	Dilution Factor
MCP Volatile Organics - Westborough Lab						
Methylene chloride	ND		ug/l	2.0	--	1
1,1-Dichloroethane	ND		ug/l	1.0	--	1
Chloroform	ND		ug/l	1.0	--	1
Carbon tetrachloride	ND		ug/l	1.0	--	1
1,2-Dichloropropane	ND		ug/l	1.0	--	1
Dibromochloromethane	ND		ug/l	1.0	--	1
1,1,2-Trichloroethane	ND		ug/l	1.0	--	1
Tetrachloroethene	ND		ug/l	1.0	--	1
Chlorobenzene	ND		ug/l	1.0	--	1
Trichlorofluoromethane	ND		ug/l	2.0	--	1
1,2-Dichloroethane	ND		ug/l	1.0	--	1
1,1,1-Trichloroethane	ND		ug/l	1.0	--	1
Bromodichloromethane	ND		ug/l	1.0	--	1
trans-1,3-Dichloropropene	ND		ug/l	0.50	--	1
cis-1,3-Dichloropropene	ND		ug/l	0.50	--	1
1,1-Dichloropropene	ND		ug/l	2.0	--	1
Bromoform	ND		ug/l	2.0	--	1
1,1,2,2-Tetrachloroethane	ND		ug/l	1.0	--	1
Benzene	ND		ug/l	1.0	--	1
Toluene	ND		ug/l	1.0	--	1
Ethylbenzene	ND		ug/l	1.0	--	1
Chloromethane	ND		ug/l	2.0	--	1
Bromomethane	ND		ug/l	2.0	--	1
Vinyl chloride	ND		ug/l	1.0	--	1
Chloroethane	ND		ug/l	2.0	--	1
1,1-Dichloroethene	ND		ug/l	1.0	--	1
trans-1,2-Dichloroethene	ND		ug/l	1.0	--	1
Trichloroethene	ND		ug/l	1.0	--	1
1,2-Dichlorobenzene	ND		ug/l	1.0	--	1
1,3-Dichlorobenzene	ND		ug/l	1.0	--	1

Project Name: CITY OF NEW BEDFORD **Lab Number:** L1013968

Project Number: 115058 **Report Date:** 09/16/10

SAMPLE RESULTS

Lab ID: L1013968-05 Date Collected: 09/08/10 00:00

Client ID: TRIP BLANK Date Received: 09/09/10

Sample Location: NBHS Field Prep: Not Specified

Parameter	Result	Qualifier	Units	RL	MDL	Dilution Factor
MCP Volatile Organics - Westborough Lab						
1,4-Dichlorobenzene	ND		ug/l	1.0	--	1
Methyl tert butyl ether	ND		ug/l	2.0	--	1
p/m-Xylene	ND		ug/l	2.0	--	1
o-Xylene	ND		ug/l	1.0	--	1
cis-1,2-Dichloroethene	ND		ug/l	1.0	--	1
Dibromomethane	ND		ug/l	2.0	--	1
1,2,3-Trichloropropane	ND		ug/l	2.0	--	1
Styrene	ND		ug/l	1.0	--	1
Dichlorodifluoromethane	ND		ug/l	2.0	--	1
Acetone	ND		ug/l	5.0	--	1
Carbon disulfide	ND		ug/l	2.0	--	1
2-Butanone	ND		ug/l	5.0	--	1
4-Methyl-2-pentanone	ND		ug/l	5.0	--	1
2-Hexanone	ND		ug/l	5.0	--	1
Bromochloromethane	ND		ug/l	2.0	--	1
Tetrahydrofuran	ND		ug/l	10	--	1
2,2-Dichloropropane	ND		ug/l	2.0	--	1
1,2-Dibromoethane	ND		ug/l	2.0	--	1
1,3-Dichloropropane	ND		ug/l	2.0	--	1
1,1,1,2-Tetrachloroethane	ND		ug/l	1.0	--	1
Bromobenzene	ND		ug/l	2.0	--	1
n-Butylbenzene	ND		ug/l	2.0	--	1
sec-Butylbenzene	ND		ug/l	2.0	--	1
tert-Butylbenzene	ND		ug/l	2.0	--	1
o-Chlorotoluene	ND		ug/l	2.0	--	1
p-Chlorotoluene	ND		ug/l	2.0	--	1
1,2-Dibromo-3-chloropropane	ND		ug/l	2.0	--	1
Hexachlorobutadiene	ND		ug/l	0.60	--	1
Isopropylbenzene	ND		ug/l	2.0	--	1
p-Isopropyltoluene	ND		ug/l	2.0	--	1
Naphthalene	ND		ug/l	5.0	--	1
n-Propylbenzene	ND		ug/l	2.0	--	1
1,2,3-Trichlorobenzene	ND		ug/l	2.0	--	1
1,2,4-Trichlorobenzene	ND		ug/l	2.0	--	1
1,3,5-Trimethylbenzene	ND		ug/l	2.0	--	1
1,2,4-Trimethylbenzene	ND		ug/l	2.0	--	1
Ethyl ether	ND		ug/l	2.0	--	1

Project Name: CITY OF NEW BEDFORD **Lab Number:** L1013968

Project Number: 115058 **Report Date:** 09/16/10

SAMPLE RESULTS

Lab ID:	L1013968-05	Date Collected:	09/08/10 00:00
Client ID:	TRIP BLANK	Date Received:	09/09/10
Sample Location:	NBHS	Field Prep:	Not Specified

Parameter	Result	Qualifier	Units	RL	MDL	Dilution Factor
MCP Volatile Organics - Westborough Lab						
Isopropyl Ether	ND		ug/l	2.0	--	1
Ethyl-Tert-Butyl-Ether	ND		ug/l	2.0	--	1
Tertiary-Amyl Methyl Ether	ND		ug/l	2.0	--	1
1,4-Dioxane	ND		ug/l	250	--	1

Surrogate	% Recovery	Qualifier	Acceptance Criteria
1,2-Dichloroethane-d4	95		70-130
Toluene-d8	96		70-130
4-Bromofluorobenzene	107		70-130
Dibromofluoromethane	109		70-130

Project Name: CITY OF NEW BEDFORD **Lab Number:** L1013968

Project Number: 115058 **Report Date:** 09/16/10

Method Blank Analysis
Batch Quality Control

Analytical Method: 97,8260B
Analytical Date: 09/13/10 10:04
Analyst: MM

Parameter	Result	Qualifier	Units	RL	MDL
MCP Volatile Organics - Westborough Lab for sample(s): 01-05 Batch: WG432277-3					
Methylene chloride	ND		ug/l	2.0	--
1,1-Dichloroethane	ND		ug/l	1.0	--
Chloroform	ND		ug/l	1.0	--
Carbon tetrachloride	ND		ug/l	1.0	--
1,2-Dichloropropane	ND		ug/l	1.0	--
Dibromochloromethane	ND		ug/l	1.0	--
1,1,2-Trichloroethane	ND		ug/l	1.0	--
Tetrachloroethene	ND		ug/l	1.0	--
Chlorobenzene	ND		ug/l	1.0	--
Trichlorofluoromethane	ND		ug/l	2.0	--
1,2-Dichloroethane	ND		ug/l	1.0	--
1,1,1-Trichloroethane	ND		ug/l	1.0	--
Bromodichloromethane	ND		ug/l	1.0	--
trans-1,3-Dichloropropene	ND		ug/l	0.50	--
cis-1,3-Dichloropropene	ND		ug/l	0.50	--
1,1-Dichloropropene	ND		ug/l	2.0	--
Bromoform	ND		ug/l	2.0	--
1,1,2,2-Tetrachloroethane	ND		ug/l	1.0	--
Benzene	ND		ug/l	1.0	--
Toluene	ND		ug/l	1.0	--
Ethylbenzene	ND		ug/l	1.0	--
Chloromethane	ND		ug/l	2.0	--
Bromomethane	ND		ug/l	2.0	--
Vinyl chloride	ND		ug/l	1.0	--
Chloroethane	ND		ug/l	2.0	--
1,1-Dichloroethene	ND		ug/l	1.0	--
trans-1,2-Dichloroethene	ND		ug/l	1.0	--
Trichloroethene	ND		ug/l	1.0	--
1,2-Dichlorobenzene	ND		ug/l	1.0	--
1,3-Dichlorobenzene	ND		ug/l	1.0	--
1,4-Dichlorobenzene	ND		ug/l	1.0	--

Project Name: CITY OF NEW BEDFORD **Lab Number:** L1013968

Project Number: 115058 **Report Date:** 09/16/10

Method Blank Analysis
Batch Quality Control

Analytical Method: 97,8260B
Analytical Date: 09/13/10 10:04
Analyst: MM

Parameter	Result	Qualifier	Units	RL	MDL
MCP Volatile Organics - Westborough Lab for sample(s): 01-05 Batch: WG432277-3					
Methyl tert butyl ether	ND		ug/l	2.0	--
p/m-Xylene	ND		ug/l	2.0	--
o-Xylene	ND		ug/l	1.0	--
cis-1,2-Dichloroethene	ND		ug/l	1.0	--
Dibromomethane	ND		ug/l	2.0	--
1,2,3-Trichloropropane	ND		ug/l	2.0	--
Styrene	ND		ug/l	1.0	--
Dichlorodifluoromethane	ND		ug/l	2.0	--
Acetone	ND		ug/l	5.0	--
Carbon disulfide	ND		ug/l	2.0	--
2-Butanone	ND		ug/l	5.0	--
4-Methyl-2-pentanone	ND		ug/l	5.0	--
2-Hexanone	ND		ug/l	5.0	--
Bromochloromethane	ND		ug/l	2.0	--
Tetrahydrofuran	ND		ug/l	10	--
2,2-Dichloropropane	ND		ug/l	2.0	--
1,2-Dibromoethane	ND		ug/l	2.0	--
1,3-Dichloropropane	ND		ug/l	2.0	--
1,1,1,2-Tetrachloroethane	ND		ug/l	1.0	--
Bromobenzene	ND		ug/l	2.0	--
n-Butylbenzene	ND		ug/l	2.0	--
sec-Butylbenzene	ND		ug/l	2.0	--
tert-Butylbenzene	ND		ug/l	2.0	--
o-Chlorotoluene	ND		ug/l	2.0	--
p-Chlorotoluene	ND		ug/l	2.0	--
1,2-Dibromo-3-chloropropane	ND		ug/l	2.0	--
Hexachlorobutadiene	ND		ug/l	0.60	--
Isopropylbenzene	ND		ug/l	2.0	--
p-Isopropyltoluene	ND		ug/l	2.0	--
Naphthalene	ND		ug/l	5.0	--
n-Propylbenzene	ND		ug/l	2.0	--

Project Name: CITY OF NEW BEDFORD **Lab Number:** L1013968

Project Number: 115058 **Report Date:** 09/16/10

Method Blank Analysis
Batch Quality Control

Analytical Method: 97,8260B
Analytical Date: 09/13/10 10:04
Analyst: MM

Parameter	Result	Qualifier	Units	RL	MDL
MCP Volatile Organics - Westborough Lab for sample(s): 01-05 Batch: WG432277-3					
1,2,3-Trichlorobenzene	ND		ug/l	2.0	--
1,2,4-Trichlorobenzene	ND		ug/l	2.0	--
1,3,5-Trimethylbenzene	ND		ug/l	2.0	--
1,2,4-Trimethylbenzene	ND		ug/l	2.0	--
Ethyl ether	ND		ug/l	2.0	--
Isopropyl Ether	ND		ug/l	2.0	--
Ethyl-Tert-Butyl-Ether	ND		ug/l	2.0	--
Tertiary-Amyl Methyl Ether	ND		ug/l	2.0	--
1,4-Dioxane	ND		ug/l	250	--

Surrogate	%Recovery	Qualifier	Acceptance Criteria
1,2-Dichloroethane-d4	95		70-130
Toluene-d8	97		70-130
4-Bromofluorobenzene	106		70-130
Dibromofluoromethane	105		70-130

Lab Control Sample Analysis
Batch Quality Control

Project Name: CITY OF NEW BEDFORD
Project Number: 115058

Lab Number: L1013968
Report Date: 09/16/10

Parameter	LCS %Recovery	Qual	LCSD %Recovery	Qual	%Recovery Limits	RPD	Qual	RPD Limits
MCP Volatile Organics - Westborough Lab Associated sample(s): 01-05 Batch: WG432277-1 WG432277-2								
Methylene chloride	99		99		70-130	0		20
1,1-Dichloroethane	98		96		70-130	2		20
Chloroform	95		95		70-130	0		20
Carbon tetrachloride	111		112		70-130	1		20
1,2-Dichloropropane	94		94		70-130	0		20
Dibromochloromethane	104		96		70-130	8		20
1,1,2-Trichloroethane	94		86		70-130	9		20
Tetrachloroethene	94		92		70-130	2		20
Chlorobenzene	90		86		70-130	5		20
Trichlorofluoromethane	87		87		70-130	0		20
1,2-Dichloroethane	94		94		70-130	0		20
1,1,1-Trichloroethane	98		95		70-130	3		20
Bromodichloromethane	106		100		70-130	6		20
trans-1,3-Dichloropropene	99		94		70-130	5		20
cis-1,3-Dichloropropene	85		83		70-130	2		20
1,1-Dichloropropene	95		95		70-130	0		20
Bromoform	111		100		70-130	10		20
1,1,2,2-Tetrachloroethane	100		92		70-130	8		20
Benzene	95		93		70-130	2		20
Toluene	92		88		70-130	4		20
Ethylbenzene	96		91		70-130	5		20

Lab Control Sample Analysis
Batch Quality Control

Project Name: CITY OF NEW BEDFORD
Project Number: 115058

Lab Number: L1013968
Report Date: 09/16/10

Parameter	LCS %Recovery	Qual	LCSD %Recovery	Qual	%Recovery Limits	RPD	Qual	RPD Limits
MCP Volatile Organics - Westborough Lab Associated sample(s): 01-05 Batch: WG432277-1 WG432277-2								
Chloromethane	90		91		70-130	1		20
Bromomethane	84		87		70-130	4		20
Vinyl chloride	83		81		70-130	2		20
Chloroethane	**68**	Q	73		70-130	7		20
1,1-Dichloroethene	83		82		70-130	1		20
trans-1,2-Dichloroethene	95		94		70-130	1		20
Trichloroethene	91		93		70-130	2		20
1,2-Dichlorobenzene	90		90		70-130	0		20
1,3-Dichlorobenzene	90		89		70-130	1		20
1,4-Dichlorobenzene	91		89		70-130	2		20
Methyl tert butyl ether	87		78		70-130	11		20
p/m-Xylene	92		89		70-130	3		20
o-Xylene	90		88		70-130	2		20
cis-1,2-Dichloroethene	100		95		70-130	5		20
Dibromomethane	89		93		70-130	4		20
1,2,3-Trichloropropane	100		93		70-130	7		20
Styrene	93		89		70-130	4		20
Dichlorodifluoromethane	81		81		70-130	0		20
Acetone	104		96		70-130	8		20
Carbon disulfide	**68**	Q	71		70-130	4		20
2-Butanone	109		87		70-130	**22**	Q	20

Lab Control Sample Analysis
Batch Quality Control

Project Name: CITY OF NEW BEDFORD
Project Number: 115058
Lab Number: L1013968
Report Date: 09/16/10

Parameter	LCS %Recovery	Qual	LCSD %Recovery	Qual	%Recovery Limits	RPD	Qual	RPD Limits
MCP Volatile Organics - Westborough Lab Associated sample(s): 01-05 Batch: WG432277-1 WG432277-2								
4-Methyl-2-pentanone	103		92		70-130	11		20
2-Hexanone	109		92		70-130	17		20
Bromochloromethane	93		91		70-130	2		20
Tetrahydrofuran	108		95		70-130	13		20
2,2-Dichloropropane	99		100		70-130	1		20
1,2-Dibromoethane	96		88		70-130	9		20
1,3-Dichloropropane	95		87		70-130	9		20
1,1,1,2-Tetrachloroethane	103		101		70-130	2		20
Bromobenzene	90		91		70-130	1		20
n-Butylbenzene	93		92		70-130	1		20
sec-Butylbenzene	93		90		70-130	3		20
tert-Butylbenzene	91		90		70-130	1		20
o-Chlorotoluene	89		89		70-130	0		20
p-Chlorotoluene	89		88		70-130	1		20
1,2-Dibromo-3-chloropropane	107		96		70-130	11		20
Hexachlorobutadiene	88		88		70-130	0		20
Isopropylbenzene	98		92		70-130	6		20
p-Isopropyltoluene	94		92		70-130	2		20
Naphthalene	92		86		70-130	7		20
n-Propylbenzene	94		90		70-130	4		20
1,2,3-Trichlorobenzene	91		88		70-130	3		20

Lab Control Sample Analysis
Batch Quality Control

Project Name: CITY OF NEW BEDFORD
Project Number: 115058
Lab Number: L1013968
Report Date: 09/16/10

Parameter	LCS %Recovery	Qual	LCSD %Recovery	Qual	%Recovery Limits	RPD	Qual	RPD Limits
MCP Volatile Organics - Westborough Lab Associated sample(s): 01-05 Batch: WG432277-1 WG432277-2								
1,2,4-Trichlorobenzene	88		85		70-130	3		20
1,3,5-Trimethylbenzene	93		90		70-130	3		20
1,2,4-Trimethylbenzene	91		89		70-130	2		20
Ethyl ether	80		76		70-130	5		20
Isopropyl Ether	88		85		70-130	3		20
Ethyl-Tert-Butyl-Ether	85		79		70-130	7		20
Tertiary-Amyl Methyl Ether	89		84		70-130	6		20
1,4-Dioxane	108		95		70-130	13		20

Surrogate	LCS %Recovery	Qual	LCSD %Recovery	Qual	Acceptance Criteria
1,2-Dichloroethane-d4	98		96		70-130
Toluene-d8	100		99		70-130
4-Bromofluorobenzene	99		103		70-130
Dibromofluoromethane	97		102		70-130

INORGANICS
&
MISCELLANEOUS

Project Name: CITY OF NEW BEDFORD
Project Number: 115058

Lab Number: L1013968
Report Date: 09/16/10

SAMPLE RESULTS

Lab ID: L1013968-03
Client ID: MW-7
Sample Location: NBHS
Matrix: Water

Date Collected: 09/09/10 12:35
Date Received: 09/09/10
Field Prep: Not Specified

Parameter	Result	Qualifier	Units	RL	MDL	Dilution Factor	Date Prepared	Date Analyzed	Analytical Method	Analyst
General Chemistry - Westborough Lab										
Nitrogen, Nitrate	ND		mg/l	0.10	--	1	-	09/09/10 23:50	30,4500NO3-F	DD
Sulfate	25		mg/l	10	--	1	09/14/10 12:25	09/14/10 12:25	1,9038	AW
Total Organic Carbon	7.4		mg/l	0.50	--	1	-	09/16/10 11:10	1,9060	DW

Project Name: CITY OF NEW BEDFORD
Project Number: 115058

Lab Number: L1013968
Report Date: 09/16/10

SAMPLE RESULTS

Lab ID: L1013968-04
Client ID: MW-27
Sample Location: NBHS
Matrix: Water

Date Collected: 09/09/10 13:00
Date Received: 09/09/10
Field Prep: Not Specified

Parameter	Result	Qualifier	Units	RL	MDL	Dilution Factor	Date Prepared	Date Analyzed	Analytical Method	Analyst
General Chemistry - Westborough Lab										
Nitrogen, Nitrate	1.0		mg/l	0.10	--	1	-	09/09/10 23:50	30,4500NO3-F	DD
Sulfate	21		mg/l	10	--	1	09/14/10 12:25	09/14/10 12:25	1,9038	AW
Total Organic Carbon	8.7		mg/l	0.50	--	1	-	09/16/10 11:10	1,9060	DW

Project Name: CITY OF NEW BEDFORD **Lab Number:** L1013968

Project Number: 115058 **Report Date:** 09/16/10

Method Blank Analysis
Batch Quality Control

Parameter	Result	Qualifier	Units	RL	MDL	Dilution Factor	Date Prepared	Date Analyzed	Analytical Method	Analyst
General Chemistry - Westborough Lab for sample(s): 03-04 Batch: WG431736-2										
Nitrogen, Nitrate	ND		mg/l	0.10	--	1	-	09/09/10 23:51	30,4500NO3-F	DD
General Chemistry - Westborough Lab for sample(s): 03-04 Batch: WG432310-1										
Sulfate	ND		mg/l	10	--	1	09/14/10 12:25	09/14/10 12:25	1,9038	AW
General Chemistry - Westborough Lab for sample(s): 03-04 Batch: WG432722-1										
Total Organic Carbon	ND		mg/l	0.50	--	1	-	09/16/10 11:10	1,9060	DW

Lab Control Sample Analysis
Batch Quality Control

Project Name: CITY OF NEW BEDFORD
Project Number: 115058

Lab Number: L1013968
Report Date: 09/16/10

Parameter	LCS %Recovery	Qual	LCSD %Recovery	Qual	%Recovery Limits	RPD	Qual	RPD Limits
General Chemistry - Westborough Lab Associated sample(s): 03-04 Batch: WG431736-1								
Nitrogen, Nitrate	100		-		90-110	-		
General Chemistry - Westborough Lab Associated sample(s): 03-04 Batch: WG432310-2								
Sulfate	100		-		90-115	-		
General Chemistry - Westborough Lab Associated sample(s): 03-04 Batch: WG432722-2								
Total Organic Carbon	106		-		90-110	-		

Matrix Spike Analysis
Batch Quality Control

Project Name: CITY OF NEW BEDFORD
Project Number: 115058
Lab Number: L1013968
Report Date: 09/16/10

Parameter	Native Sample	MS Added	MS Found	MS %Recovery	Qual	MSD Found	MSD %Recovery	Qual	Recovery Limits	RPD	Qual	RPD Limits
General Chemistry - Westborough Lab Associated sample(s): 03-04 QC Batch ID: WG431736-3 QC Sample: L1013967-03 Client ID: MS Sample												
Nitrogen, Nitrate	0.10	4	3.9	98		-	-		83-113	-		17
General Chemistry - Westborough Lab Associated sample(s): 03-04 QC Batch ID: WG432310-4 QC Sample: L1013967-03 Client ID: MS Sample												
Sulfate	ND	20	22	110		-	-		55-147	-		14
General Chemistry - Westborough Lab Associated sample(s): 03-04 QC Batch ID: WG432722-3 QC Sample: L1013968-04 Client ID: MW-27												
Total Organic Carbon	8.7	8	18	**121**	Q	-	-		80-120	-		20

Lab Duplicate Analysis
Batch Quality Control

Project Name: CITY OF NEW BEDFORD
Project Number: 115058

Lab Number: L1013968
Report Date: 09/16/10

Parameter	Native Sample	Duplicate Sample	Units	RPD	Qual	RPD Limits
General Chemistry - Westborough Lab Associated sample(s): 03-04 QC Batch ID: WG431736-4 QC Sample: L1013967-03 Client ID: DUP Sample						
Nitrogen, Nitrate	0.10	0.10	mg/l	0		17
General Chemistry - Westborough Lab Associated sample(s): 03-04 QC Batch ID: WG432310-3 QC Sample: L1013967-03 Client ID: DUP Sample						
Sulfate	ND	ND	mg/l	NC		14
General Chemistry - Westborough Lab Associated sample(s): 03-04 QC Batch ID: WG432722-4 QC Sample: L1013968-03 Client ID: MW-7						
Total Organic Carbon	7.4	7.8	mg/l	5		20

Project Name: CITY OF NEW BEDFORD
Project Number: 115058

Lab Number: L1013968
Report Date: 09/16/10

Sample Receipt and Container Information

Were project specific reporting limits specified? YES

Reagent H2O Preserved Vials Frozen on: NA

Cooler Information Custody Seal

Cooler	
A	Absent

Container Information

Container ID	Container Type	Cooler	pH	Temp deg C	Pres	Seal	Analysis(*)
L1013968-01A	Vial HCl preserved	A	N/A	2	Y	Absent	MCP-8260-10(14)
L1013968-01B	Vial HCl preserved	A	N/A	2	Y	Absent	MCP-8260-10(14)
L1013968-02A	Vial HCl preserved	A	N/A	2	Y	Absent	MCP-8260-10(14)
L1013968-02B	Vial HCl preserved	A	N/A	2	Y	Absent	MCP-8260-10(14)
L1013968-03A	Vial HCl preserved	A	N/A	2	Y	Absent	MCP-8260-10(14)
L1013968-03B	Vial HCl preserved	A	N/A	2	Y	Absent	MCP-8260-10(14)
L1013968-03C	Vial H2SO4 preserved	A	N/A	2	Y	Absent	TOC-9060(28)
L1013968-03D	Vial H2SO4 preserved	A	N/A	2	Y	Absent	TOC-9060(28)
L1013968-03E	Plastic 250ml unpreserved	A	7	2	Y	Absent	SO4-9038(28),NO3-4500(2)
L1013968-04A	Vial HCl preserved	A	N/A	2	Y	Absent	MCP-8260-10(14)
L1013968-04B	Vial HCl preserved	A	N/A	2	Y	Absent	MCP-8260-10(14)
L1013968-04C	Vial H2SO4 preserved	A	N/A	2	Y	Absent	TOC-9060(28)
L1013968-04D	Vial H2SO4 preserved	A	N/A	2	Y	Absent	TOC-9060(28)
L1013968-04E	Plastic 250ml unpreserved	A	7	2	Y	Absent	SO4-9038(28),NO3-4500(2)
L1013968-05A	Vial HCl preserved	A	N/A	2	Y	Absent	MCP-8260-10(14)

*Values in parentheses indicate holding time in days

Project Name:	CITY OF NEW BEDFORD	**Lab Number:**	L1013968
Project Number:	115058	**Report Date:**	09/16/10

GLOSSARY

Acronyms

EPA	· Environmental Protection Agency.
LCS	· Laboratory Control Sample: A sample matrix, free from the analytes of interest, spiked with verified known amounts of analytes or a material containing known and verified amounts of analytes.
LCSD	· Laboratory Control Sample Duplicate: Refer to LCS.
MDL	· Method Detection Limit: This value represents the level to which target analyte concentrations are reported as estimated values, when those target analyte concentrations are quantified below the reporting limit (RL). The MDL includes any adjustments from dilutions, concentrations or moisture content, where applicable.
MS	· Matrix Spike Sample: A sample prepared by adding a known mass of target analyte to a specified amount of matrix sample for which an independent estimate of target analyte concentration is available.
MSD	· Matrix Spike Sample Duplicate: Refer to MS.
NA	· Not Applicable.
NC	· Not Calculated: Term is utilized when one or more of the results utilized in the calculation are non-detect at the parameter's reporting unit.
NI	· Not Ignitable.
RL	· Reporting Limit: The value at which an instrument can accurately measure an analyte at a specific concentration. The RL includes any adjustments from dilutions, concentrations or moisture content, where applicable.
RPD	· Relative Percent Difference: The results from matrix and/or matrix spike duplicates are primarily designed to assess the precision of analytical results in a given matrix and are expressed as relative percent difference (RPD). Values which are less than five times the reporting limit for any individual parameter are evaluated by utilizing the absolute difference between the values; although the RPD value will be provided in the report.

Terms

Analytical Method: Both the document from which the method originates and the analytical reference method. (Example: EPA 8260B is shown as 1,8260B.) The codes for the reference method documents are provided in the References section of the Addendum.

Data Qualifiers

A	- Spectra identified as "Aldol Condensation Product".
B	- The analyte was detected above the reporting limit in the associated method blank. Flag only applies to associated field samples that have detectable concentrations of the analyte at less than five times (5x) the concentration found in the blank. For MCP-related projects, flag only applies to associated field samples that have detectable concentrations of the analyte at less than ten times (10x) the concentration found in the blank. For DOD-related projects, flag only applies to associated field samples that have detectable concentrations of the analyte at less than ten times (10x) the concentration found in the blank AND the analyte was detected above one-half the reporting limit (or above the reporting limit for common lab contaminants) in the associated method blank.
D	- Concentration of analyte was quantified from diluted analysis. Flag only applies to field samples that have detectable concentrations of the analyte.
E	- Concentration of analyte exceeds the range of the calibration curve and/or linear range of the instrument.
H	- The analysis of pH was performed beyond the regulatory-required holding time of 15 minutes from the time of sample collection.
I	- The RPD between the results for the two columns exceeds the method-specified criteria; however, the lower value has been reported due to obvious interference.
P	- The RPD between the results for the two columns exceeds the method-specified criteria.
Q	- The quality control sample exceeds the associated acceptance criteria. Note: This flag is not applicable for matrix spike recoveries when the sample concentration is greater than 4x the spike added or for batch duplicate RPD when the sample concentrations are less than 5x the RL. (Metals only.)
R	- Analytical results are from sample re-analysis.

Report Format: Data Usability Report

Project Name:	CITY OF NEW BEDFORD	**Lab Number:**	L1013968
Project Number:	115058	**Report Date:**	09/16/10

Data Qualifiers

RE - Analytical results are from sample re-extraction.

J - Estimated value. This represents an estimated concentration for Tentatively Identified Compounds (TICs).

ND - Not detected at the reporting limit (RL) for the sample.

Report Format: Data Usability Report

Project Name: CITY OF NEW BEDFORD **Lab Number:** L1013968
Project Number: 115058 **Report Date:** 09/16/10

REFERENCES

1 Test Methods for Evaluating Solid Waste: Physical/Chemical Methods. EPA SW-846. Third Edition. Updates I - IIIA, 1997.

30 Standard Methods for the Examination of Water and Wastewater. APHA-AWWA-WPCF. 18th Edition. 1992.

97 EPA Test Methods (SW-846) with QC Requirements & Performance Standards for the Analysis of EPA SW-846 Methods under the Massachusetts Contingency Plan, WSC-CAM-IIA, IIB, IIIA, IIIB, IIIC, IIID, VA, VB, VC, VIA, VIB, VIIIA and VIIIB, July 2010.

LIMITATION OF LIABILITIES

Alpha Analytical performs services with reasonable care and diligence normal to the analytical testing laboratory industry. In the event of an error, the sole and exclusive responsibility of Alpha Analytical shall be to re-perform the work at it's own expense. In no event shall Alpha Analytical be held liable for any incidental, consequential or special damages, including but not limited to, damages in any way connected with the use of, interpretation of, information or analysis provided by Alpha Analytical.

We strongly urge our clients to comply with EPA protocol regarding sample volume, preservation, cooling, containers, sampling procedures, holding time and splitting of samples in the field.

Certificate/Approval Program Summary

Last revised July 19, 2010 - Westboro Facility

The following list includes only those analytes/methods for which certification/approval is currently held.
For a complete listing of analytes for the referenced methods, please contact your Alpha Customer Service Representative.

Connecticut Department of Public Health Certificate/Lab ID: PH-0574. ***NELAP Accredited Solid Waste/Soil.***

Drinking Water (Inorganic Parameters: Color, pH, Turbidity, Conductivity, Alkalinity, Chloride, Free Residual Chlorine, Fluoride, Calcium Hardness, Sulfate, Nitrate, Nitrite, Aluminum, Antimony, Arsenic, Barium, Beryllium, Cadmium, Calcium, Chromium, Copper, Iron, Lead, Magnesium, Manganese, Mercury, Molybdenum, Nickel, Potassium, Selenium, Silver, Sodium, Thallium, Vanadium, Zinc, Total Dissolved Solids, Total Organic Carbon, Total Cyanide, Perchlorate. Organic Parameters: Volatile Organics 524.2, Total Trihalomethanes 524.2, 1,2-Dibromo-3-chloropropane (DBCP), Ethylene Dibromide (EDB), 1,4-Dioxane (Mod 8270). Microbiology Parameters: Total Coliform-MF mEndo (SM9222B), Total Coliform – Colilert (SM9223 P/A), E. Coli. – Colilert (SM9223 P/A), HPC – Pour Plate (SM9215B), Fecal Coliform – MF m-FC (SM9222D))
Wastewater/Non-Potable Water (Inorganic Parameters: Color, pH, Conductivity, Acidity, Alkalinity, Chloride, Total Residual Chlorine, Fluoride, Total Hardness, Silica, Sulfate, Sulfide, Ammonia, Kjeldahl Nitrogen, Nitrate, Nitrite, O-Phosphate, Total Phosphorus, Aluminum, Antimony, Arsenic, Barium, Beryllium, Boron, Cadmium, Calcium, Chromium, Hexavalent Chromium, Cobalt, Copper, Iron, Lead, Magnesium, Manganese, Mercury, Molybdenum, Nickel, Potassium, Selenium, Silver, Sodium, Strontium, Thallium, Tin, Titanium, Vanadium, Zinc, Total Residue (Solids), Total Dissolved Solids, Total Suspended Solids (non-filterable), BOD, CBOD, COD, TOC, Total Cyanide, Phenolics, Foaming Agents (MBAS), Bromide, Oil and Grease. Organic Parameters: PCBs, Organochlorine Pesticides, Technical Chlordane, Toxaphene, 2,4-D, 2,4,5-T, 2,4,5-TP(Silvex), Acid Extractables (Phenols), Benzidines, Phthalate Esters, Nitrosamines, Nitroaromatics & Isophorone, Polynuclear Aromatic Hydrocarbons, Haloethers, Chlorinated Hydrocarbons, Volatile Organics, TPH (HEM/SGT), Extractable Petroleum Hydrocarbons (ETPH), MA-EPH, MA-VPH. Microbiology Parameters: Total Coliform – MF mEndo (SM9222B), Total Coliform – MTF (SM9221B), HPC – Pour Plate (SM9215B), Fecal Coliform – MF m-FC (SM9222D), Fecal Coliform – A-1 Broth (SM9221E).)
Solid Waste/Soil (Inorganic Parameters: pH, Sulfide, Aluminum, Antimony, Arsenic, Barium, Beryllium, Boron, Cadmium, Calcium, Chromium, Hexavalent Chromium, Cobalt, Copper, Iron, Lead, Magnesium, Manganese, Mercury, Molybdenum, Nickel, Potassium, Selenium, Silver, Sodium, Thallium, Tin, Vanadium, Zinc, Total Cyanide, Ignitability, Phenolics, Corrosivity, TCLP Leach (1311), SPLP Leach (1312 metals only), Reactivity. Organic Parameters: PCBs, PCBs in Oil, Organochlorine Pesticides, Technical Chlordane, Toxaphene, Extractable Petroleum Hydrocarbons (ETPH), MA-EPH, MA-VPH, Dicamba, 2,4-D, 2,4,5-T, 2,4,5-TP(Silvex), Volatile Organics, Acid Extractables (Phenols), 3.3'-Dichlorobenzidine, Phthalates, Nitrosamines, Nitroaromatics & Cyclic Ketones, PAHs, Haloethers, Chlorinated Hydrocarbons.)

Maine Department of Human Services Certificate/Lab ID: 2009024.
Drinking Water (Inorganic Parameters: SM9215B, 9222D, 9223B, EPA 180.1, 300.0, 353.2, SM2130B, 2320B, 4500Cl-D, 4500CN-C, 4500CN-E, 4500F-C, 4500H+B, 4500NO3-F, EPA 200.7, EPA 200.8, 245.1, EPA 300.0. Organic Parameters: 504.1, 524.2.)
Wastewater/Non-Potable Water (Inorganic Parameters: EPA 120.1, 1664A, 350.1, 351.1, 353.2, 410.4, 420.1, Lachat 10-107-06-1-B, SM2320B, 2340B, 2510B, 2540C, 2540D, 426C, 4500Cl-D, 4500Cl-E, 4500CN-C, 4500CN-E, 4500F-B, 4500F-C, 4500H+B, 4500Norg-B, 4500Norg-C, 4500NH3-B, 4500NH3-G, 4500NH3-H, 4500NO3-F, 4500P-B.5, 4500P-E, 5210B, 5220D, 5310C, EPA 200.7, 200.8, 245.1. Organic Parameters: 608, 624, ME DRO, ME GRO, MA EPH, MA VPH.)
*Solid Waste/Soil (*Organic Parameters: ME DRO, ME GRO, MA EPH, MA VPH.)

Massachusetts Department of Environmental Protection Certificate/Lab ID: M-MA086.
Drinking Water
Inorganic Parameters: (EPA 200.8 for: Sb,As,Ba,Be,Cd,Cr,Cu,Pb,Ni,Se,Tl)
(EPA 200.7 for: Ba,Be,Ca,Cd,Cr,Cu,Na,Ni) 245.1, (300.0 for: Nitrate-N, Fluoride, Sulfate)
353.2 for: Nitrate-N, Nitrite-N; SM4500NO3-F, 4500F-C, 4500CN-CE, EPA 180.1, SM2130B, SM4500Cl-D, 2320B, SM2540C, SM4500H-B.
Organic Parameters: (EPA 524.2 for: Trihalomethanes, Volatile Organics)
(504.1 for: 1,2-Dibromoethane, 1,2-Dibromo-3-Chloropropane), 314.0, 332.
Microbiology Parameters: SM9215B; ENZ. SUB. SM9223; MF-SM9222D
Non-Potable Water
Inorganic Parameters:, (EPA 200.8 for: Al,Sb,As,Be,Cd,Cr,Cu,Pb,Mn,Ni,Se,Ag,Tl,Zn)
(EPA 200.7 for: Al,Sb,As,Be,Cd,Cr,Co,Cu,Fe,Pb,Mn,Mo,Ni,Se,Ag,Sr,Ti,Tl, V,Zn,Ca,Mg,Na,K)
245.1, SM4500H,B, EPA 120.1, SM2510B, 2540C, 2540B, 2340B, 2320B, 4500CL-E, 4500F-BC, 426C, SM4500NH3-BH, (EPA 350.1 for: Ammonia-N), LACHAT 10-107-06-1-B for Ammonia-N, SM4500NO3-F, 353.2 for Nitrate-N, SM4500NH3-B,C-Titr, SM4500NH3-BC-NES, EPA 351.1, SM4500P-E, 4500P-B,E, 5220D, EPA 410.4, SM 5210B, 5310C, 4500CL-D, EPA 1664, SM14 510AC, EPA 420, SM4500-CN-CE, SM2540D.
Organic Parameters: (EPA 624 for Volatile Halocarbons, Volatile Aromatics)

(608 for: Chlordane, Aldrin, Dieldrin, DDD, DDE, DDT, Heptachlor, Heptachlor Epoxide, PCBs-Water), EPA 625 for SVOC Acid Extractables and SVOC Base/Neutral Extractables, 600/4-81-045-PCB-Oil

New Hampshire Department of Environmental Services Certificate/Lab ID: 200307. ***NELAP Accredited.***
Drinking Water (Inorganic Parameters: SM6215B, 9222B, 9223B Colilert, EPA 200.7, 200.8, 245.2, 120.1, 300.0, 314.0, SM4500CN-E, 4500H+B, 4500NO3-F, 2320B, 2510B, 2540C, 4500F-C, 5310C, 2120B, EPA 331.0. Organic Parameters: 504.1, 524.2, SM6251B.)
Non-Potable Water (Inorganic Parameters: SM9222D, 9221B, 9222B, 9221E-EC, EPA 200.7, 200.8, 245.1, 245.2, SW-846 6010B, 6020, 7196A, 7470A, SM3500-CR-D, EPA 120.1, 300.0, 350.1, 351.1, 353.2, 420.1, 1664A, SW-846 9010, 9030, 9040B, SM426C, SM2310B, 2540B, 2540D, 4500H+B, 4500NH3-H, 4500NH3-E, 4500NO2-B, 4500P-E, 4500-S2-D, 5210B, 2320B, 2540C, 4500F-C, 5310C, 5540C, LACHAT 10-117-07-1-B, LACHAT 10-107-06-1-B, LACHAT 10-107-04-1-C, LACHAT 10-107-04-1-J, LACHAT 10-117-07-1-A, SM4500CL-E, LACHAT 10-204-00-1-A, LACHAT 10-107-06-2-D. Organic Parameters: SW-846 3005A, 3015A, 3510C, 5030B, 8021B, 8260B, 8270C, 8330, EPA 624, 625, 608, SW-846 8082, 8081A.)
Solid & Chemical Materials (Inorganic Parameters: SW-846 6010B, 7196A, 7471A, 7.3.3.2, 7.3.4.2, 1010, 1030, 9010, 9012A, 9014, 9030B, 9040, 9045C, 9050C, 1311, 3005A, 3050B, 3051A. Organic Parameters: SW-846 3540C, 3545, 3580A, 5030B, 5035, 8021B, 8260B, 8270C, 8330, 8151A, 8082, 8081A.)

New Jersey Department of Environmental Protection Certificate/Lab ID: MA935. ***NELAP Accredited.***
Drinking Water (Inorganic Parameters: SM9222B, 9221E, 9223B, 9215B, 4500NO3-F, 4500F-C, EPA 300.0, 200.7, 2540C, 2320B, 314.0, SM2120B, 2510B, 5310C, SM4500H-B, EPA 200.8, 245.2. Organic Parameters: 504.1, SM6251B, 524.2.)
Non-Potable Water (Inorganic Parameters: SM5210B, EPA 410.4, SM5220D, 4500Cl-D, EPA 300.0, SM2120B, SM4500F-BC, EPA 200.7, 351.1, LACHAT 10-107-06-2-D, EPA 353.2, SM4500NO3-F, 4500NO2-B, EPA 1664A, SM5310B, C or D, 4500-PE, EPA 420.1, SM4500P-B5+E, 2540B, 2540C, 2540D, EPA 120.1, SM2510B, SM15 426C, SM9221CE, 9222D, 9221B, 9222B, 9215B, 2310B, 2320B, 4500NH3-H, 4500-S D, EPA 350.1, SM5210B, SW-846 3015, 6020, 7470A, 5540C, 4500H-B, EPA 200.8, SM3500Cr-D, EPA 245.1, 245.2, SW-846 9040B, 3005A, EPA 6010B, 7196A, SW-846 9010B, 9030B. Organic Parameters: SW-846 8260B, 8270C, 3510C, EPA 608, 624, 625, SW-846 5030B, 8021B, 8081A, 8082, 8151A, 8330, NJ OQA-QAM-025 Rev.7.)
Solid & Chemical Materials (Inorganic Parameters: SW-846 9040B, 3005A, 6010B, 7196A, 5030B, 9010B, 9030B, 1030, 1311, 3050B, 3051, 7471A, 9014, 9012A, 9045C, 9050A, 9065. Organic Parameters: SW-846 8021B, 8081A, 8082, 8151A, 8330, 8260B, 8270C, 1311, 1312, 3540C, 3545, 3550B, 3580A, 5035L, 5035H, NJ OQA-QAM-025 Rev.7.)

New York Department of Health Certificate/Lab ID: 11148. ***NELAP Accredited.***
Drinking Water (Inorganic Parameters: SM9223B, 9222B, 9215B, EPA 200.8, 200.7, 245.2, SM5310C, EPA 314.0, 332.0, SM2320B, EPA 300.0, SM2120B, 4500CN-E, 4500F-C, 4500H-B, 4500NO3-F, 2540C, EPA 120.1, SM 2510B. Organic Parameters: EPA 524.2, 504.1.)
Non-Potable Water (Inorganic Parameters: SM9221E, 9222D, 9221B, 9222B, 9215B, 5210B, EPA 410.4, SM5220D, 2310B-4a, 2320B, EPA 200.7, 300.0, LACHAT 10-117-07-1A or B, SM4500Cl-E, 4500F-C, SM15 426C, EPA 350.1, LACHAT 10-107-06-1-B, SM4500NH3-H, EPA 351.1, LACHAT 10-107-06-2, EPA 353.2, LACHAT 10-107-041-C, SM4500-NO3-F, 4500-NO2-B, 4500P-E, 2540C, 2540B, 2540D, EPA 200.8, EPA 6010B, 6020, EPA 7196A, S\M3500Cr-D, EPA 245.1, 245.2, 7470A, SM2120B, SM4500-CN-E LACHAT 10-204-00-1-A, EPA 9040B, SM4500-HB, EPA 1664A, SM5310C, EPA 420.1, SM14 510C, EPA 120.1, SM2510B, SM4500S-D, SM5540C, EPA 3005A, 3015. Organic Parameters: EPA 624, 8260B, 8270C, 625, 608, 8081A, 8151A, 8330, 8082, EPA 3510C, 5030B, 9010B, 9030B.)
Solid & Hazardous Waste (Inorganic Parameters: 1010, 1030, SW-846 Ch 7 Sec 7.3, EPA 6010B, 7196A, 7471A, 9012A, 9014, 9040B, 9045C, 9065, 9050, EPA 1311, 1312, 3005A, 3050B, 9010B, 9030B. Organic Parameters: EPA 8260B, 8270C, 8081A, 8151A, 8330, 8082, 3540C, 3545, 3546, 3580, 5030B, 5035.)

North Carolina Department of the Environment and Natural Resources Certificate/Lab ID : 666. Organic Parameters: MA-EPH, MA-VPH.

Pennsylvania Department of Environmental Protection Certificate/Lab ID : 68-03671. ***NELAP Accredited.***
Non-Potable Water (Organic Parameters: EPA 3510C, 5030B, 625, 624. 608, 8081A, 8082, 8151A, 8260B, 8270C, 8330)
Solid & Hazardous Waste (Inorganic Parameters: EPA 1010, 1030, 1311, 3050B, 3051, 6010B, EPA 7.3.3.2, EPA 7.3.4.2, 7196A, 7471A, 9010B, 9012A, 9014, 9040B, 9045C, 9050, 9065. Organic Parameters: 3540C, 3545, 3580A, 5035, 8021B, 8081A, 8082, 8151A, 8260B, 8270C, 8330)

Rhode Island Department of Health Certificate/Lab ID: LAO00065. ***NELAP Accredited via NY-DOH.***
Refer to MA-DEP Certificate for Potable and Non-Potable Water.
Refer to NY-DOH Certificate for Potable and Non-Potable Water.

Texas Commisson on Environmental Quality Certificate/Lab ID: T104704476-09-1. ***NELAP Accredited.***
Non-Potable Water (Inorganic Parameters: EPA 120.1, 1664, 200.7, 200.8, 245.1, 245.2, 300.0, 350.1, 351.1, 353.2, 376.2, 410.4, 420.1, 6010, 6020, 7196, 7470, 9040, SM 2120B, 2310B, 2320B, 2510B, 2540B, 2540C, 2540D, 426C, 4500CL-E, 4500CN-E, 4500F-C, 4500H+B, 4500NH3-H, 4500NO2B, 4500P-E, 4500 S2¯D, 510C, 5210B, 5220D, 5310C, 5540C. Organic Parameters: EPA 608, 624, 625, 8081, 8082, 8151, 8260, 8270, 8330.)

Solid & Hazardous Waste (Inorganic Parameters: EPA 1311, 1312, 9012, 9014, 9040, 9045, 9050, 9065.)

Department of Defense Certificate/Lab ID: L2217.
Drinking Water (Inorganic Parameters: SM 4500H-B. Organic Parameters: EPA 524.2, 504.1.)

Non-Potable Water (Inorganic Parameters: EPA 200.7, 200.8, 6010B, 6020, 245.1, 245.2, 7470A, 9040B, 300.0, 9251, 9038, 350.1, 353.2, 351.1, 120.1, 9050A , 410.4, 9060, 1664, 420.1, LACHAT 10-107-06-1-B, SM 4500CN-E, 4500H-B, 4500CL-E, 4500F-BC, 4500SO4-E, 426C, 4500NH3-B, 4500NH3-H, 4500NO3-F, 4500NO2-B, 4500Norg-C, 4500PE, 2510B, 5540C, 5220D, 5310C, 2540B, 2540C, 2540D, 510C, 4500S2-AD, 3005A, 3015, 9010B, 9030B. Organic Parameters: EPA 8260B, 8270C, 8330, 625, 8082, 8151A, 8081A, 3510C, 5030B, MassDEP EPH, MassDEP VPH.)

Solid & Hazardous Waste (Inorganic Parameters: EPA 200.7, 6010B, 7471A, 9040B, 9045C, 9065, 420.1, 9012A, 6860, 1311, 1312, 3050B, 9030B, 3051, 9010B, 3540C, SM 510ABC, 4500CN-CE, 2540G, SW-846 7.3, Organic Parameters: EPA 8260B, 8270C, 8330, 8082, 8081A, 8151A, 3545, 3546, 3580, 5035, MassDEP EPH, MassDEP VPH.)

Analytes Not Accredited by NELAP
Certification is not available by NELAP for the following analytes: **EPA 8260B:** Freon-113, 1,2,4,5-Tetramethylbenzene, 4-Ethyltoluene. **EPA 8330A:** PETN, Picric Acid, Nitroglycerine, 2,6-DANT, 2,4-DANT. **EPA 8270C:** Methyl naphthalene, Dimethyl naphthalene, Total Methylnapthalenes, Total Dimethylnaphthalenes, 1,4-Diphenylhydrazine (Azobenzene). **EPA 625:** 4-Chloroaniline. **EPA 350.1** for Ammonia in a Soil matrix.

Serial_No:09161014:53

CHAIN OF CUSTODY

PAGE 1 OF 1

ALPHA ANALYTICAL

WESTBORO, MA TEL: 508-898-9220 FAX: 508-898-9193

MANSFIELD, MA TEL: 508-822-9300 FAX: 508-822-3288

Date Rec'd in Lab: 9/9/10

ALPHA Job #: L1013968

Client Information

Client: TRC

Address: 650 Suffolk St. Lowell Ma. 01854

Phone: 978-970-5600

Fax:

Email: DSullivan@TRCSolutions.com

☐ These samples have been previously analyzed by Alpha

Project Information

Project Name: City of New Bedford

Project Location: NBHS

Project #: 115058

Project Manager: David Sullivan

ALPHA Quote #:

Turn-Around Time

☒ Standard ☐ RUSH (only confirmed if pre-approved!)

Date Due: 9/10/10 Time:

Report Information - Data Deliverables

☐ FAX ☒ EMAIL

☐ ADEx ☐ Add'l Deliverables

Billing Information

☐ Same as Client info PO #:

Regulatory Requirements/Report Limits

State /Fed Program MCP/GW-1,2,3 Criteria

MA MCP PRESUMPTIVE CERTAINTY --- CT REASONABLE CONFIDENCE PROTO

☒ Yes ☐ No Are MCP Analytical Methods Required?

☐ Yes ☐ No Is Matrix Spike (MS) Required on this SDG? (If yes see note in Comments)

☐ Yes ☒ No Are CT RCP (Reasonable Confidence Protocols) Required?

Other Project Specific Requirements/Comments/Detection Limits:

If MS is required , indicate in Sample Specific Comments which samples and what tests MS to be performed.
(Note: All ***CAM*** methods for inorganic analyses require MS every 20 soil samples)

SAMPLE HANDLING

Filtration
☐ Done
☐ Not needed
☐ Lab to do

Preservation
☐ Lab to do
(Please specify below)

ALPHA Lab ID (Lab Use Only)	Sample ID	Collection Date	Collection Time	Sample Matrix	Sampler's Initials	VOCs 8260 + TO15	Nitrate/Sulfate 1st	TOC	Sample Specific Comments	TOTAL # BOTTLES
13968.1	MW-25	9/8/10	1045	GW		X				
2	MW-26	9/8/10	1320	GW		X				
3	MW-7	9/9/10	1235	GW		X	X	X		
4	MW-27	9/9/10	1300	GW		X	X	X		
5	Trip Blank	9/3/10	—	GW		X				

Container Type

Preservative

PLEASE ANSWER QUESTIONS ABOVE!

IS YOUR PROJECT MA MCP or CT RCP?

Relinquished By:	Date/Time	Received By:	Date/Time
[signature]	9/9/10 1315	[signature]	9/9/10 1315
[signature]	9/9/10 1810	[signature]	9/9/10 1810

Please print clearly, legibly and completely. Samples can not be logged in and turnaround time clock will not start until any ambiguities are resolved. All samples submitted are subject to Alpha's Terms and Conditions. See reverse side.

FORM NO: 01-01 (rev. 18-Jan-2010)

7A
VOLATILE CONTINUING CALIBRATION CHECK

Lab Name: Alpha Analytical Labs

SDG No.: L1013968

Instrument ID: Jack.i Calibration Date: 13-SEP-2010 Time: 08:27

Lab File ID: 0913A02.D Init. Calib. Date(s): 03-SEP-2 03-SEP-2

Sample No: 8260 CCAL Init. Calib. Times : 12:28 16:15

Compound	RRF	RRF	MIN RRF	%D	MAX %D	
dichlorodifluoromethane	.65583	.52947	.1	19	20	
chloromethane	.89391	.80499	.1	10	20	
vinyl chloride	.9952	.82182	.1	17	20	
bromomethane	.76906	.64394	.1	16	20	
chloroethane	.58279	.39742	.1	32	20	F
trichlorofluoromethane	1.4093	1.2235	.1	13	20	
ethyl ether	.38128	.30711	.05	19	20	
1,1,-dichloroethene	.88486	.73148	.1	17	20	
carbon disulfide	2.3952	1.6365	.05	32	20	F
freon-113	.9084	.89868	.1	1	20	
iodomethane	1.1077	.55078	.05	50	20	F
acrolien	.03214	.05944	.05	-85	20	F
methylene chloride	.67906	.67281	.05	1	20	
acetone	.0992	.10337	.1	-4	20	F
trans-1,2-dichloroethene	.70504	.67254	.1	5	20	
methyl acetate	.26355	.31964	.1	-21	20	F
methyl tert butyl ether	1.2488	1.0875	.1	13	20	
tert butyl alcohol	.03959	.03588	.05	9	20	F
Diisopropyl Ether	1.7964	1.5796	.05	12	20	
1,1-dichloroethane	1.2229	1.2035	.2	2	20	
halothane	.55826	.48955	.05	12	20	
Ethyl-Tert-Butyl-Ether	1.4776	1.2516	.05	15	20	
vinyl acetate	100	92.859	.05	7	20	
cis-1,2-dichloroethene	.74679	.74673	.1	0	20	
2,2-dichloropropane	.87026	.86436	.05	1	20	
bromochloromethane	.34163	.31683	.05	7	20	
chloroform	1.2242	1.1584	.2	5	20	
carbontetrachloride	.6615	.73555	.1	-11	20	
tetrahydrofuran	.12367	.13383	.05	-8	20	
1,1,1-trichloroethane	.99818	.97375	.1	2	20	
1,1-dichloropropene	.94067	.89273	.05	5	20	
2-butanone	.14128	.15348	.1	-9	20	
benzene	2.6797	2.5553	.5	5	20	
Tertiary-Amyl Methyl Ether	1.1926	1.0655	.05	11	20	
1,2-dichloroethane	.73579	.68981	.1	6	20	
trichloroethene	.70864	.64205	.2	9	20	
dibromomethane	.35836	.32013	.05	11	20	
1,2-dichloropropane	.62676	.58949	.1	6	20	

FORM VII MCP-8260-10

7A
CONTINUING CALIBRATION CHECK

Lab Name: Alpha Analytical Labs

SDG No.: L1013968

Instrument ID: Jack.i Calibration Date: 13-SEP-2010 Time: 08:27

Lab File ID: 0913A02.D Init. Calib. Date(s): 03-SEP-2 03-SEP-2

Sample No: 8260 CCAL Init. Calib. Times : 12:28 16:15

Compound	RRF	RRF	MIN RRF	%D	MAX %D	
bromodichloromethane	.73256	.77601	.2	-6	20	
1,4-dioxane	.00297	.00322	.05	-8	20	F
2-chloroethylvinyl ether	.25659	.24501	.05	5	20	
cis-1,3-dichloropropene	.85148	.72619	.2	15	20	
toluene	2.0742	1.9024	.4	8	20	
tetrachloroethene	.98354	.92014	.2	6	20	
4-methyl-2-pentanone	.10255	.1059	.1	-3	20	
trans-1,3-dichloropropene	.74729	.73669	.1	1	20	
1,1,2-trichloroethane	.41806	.39202	.1	6	20	
chlorodibromomethane	.52762	.54833	.1	-4	20	
1,3-dichloropropane	.90325	.85656	.05	5	20	
1,2-dibromoethane	.49749	.47761	.1	4	20	
2-hexanone	.2136	.233	.1	-9	20	
chlorobenzene	2.3166	2.0807	.5	10	20	
ethyl benzene	4.0321	3.8723	.1	4	20	
1,1,1,2-tetrachloroethane	100	103	.05	-3	20	
p/m xylene	1.7282	1.5868	.1	8	20	
o xylene	1.6354	1.4696	.3	10	20	
bromoform	100	111	.1	-11	20	
styrene	2.6821	2.4995	.3	7	20	
isopropylbenzene	4.0470	3.9592	.1	2	20	
bromobenzene	1.5669	1.4125	.05	10	20	
n-propylbenzene	7.2891	6.8147	.05	7	20	
1,1,2,2,-tetrachloroethane	.85429	.85166	.3	0	20	
2-chlorotoluene	4.9352	4.4124	.05	11	20	
1,2,3-trichloropropane	.72438	.72334	.05	0	20	
trans-1,4-dichloro-2-butene	.22258	.19828	.05	11	20	
4-chorotoluene	4.4385	3.9695	.05	11	20	
tert-butylbenzene	4.3697	3.982	.05	9	20	
1,2,4-trimethylbenzene	5.1738	4.6908	.05	9	20	
1,3,5-trimethybenzene	6.2556	5.8104	.05	7	20	
sec-butylbenzene	6.2556	5.8104	.05	7	20	
p-isopropyltoluene	5.2224	4.9027	.05	6	20	
1,3-dichlorobenzene	3.2167	2.8905	.6	10	20	
1,4-dichlorobenzene	3.2053	2.9135	.5	9	20	
n-butylbenzene	4.3185	4.0338	.05	7	20	
1,2-dichlorobenzene	2.8459	2.5652	.4	10	20	
1,2-dibromo-3-chloropropane	.11955	.12761	.05	-7	20	

FORM VII MCP-8260-10

7A
CONTINUING CALIBRATION CHECK

Lab Name: Alpha Analytical Labs

SDG No.: L1013968

Instrument ID: Jack.i Calibration Date: 13-SEP-2010 Time: 08:27

Lab File ID: 0913A02.D Init. Calib. Date(s): 03-SEP-2 03-SEP-2

Sample No: 8260 CCAL Init. Calib. Times : 12:28 16:15

Compound	___ RRF	RRF	MIN RRF	%D	MAX %D
1,2,4-trichlorobenzene	1.7181	1.5113	.2	12	20
hexachlorobutadiene	.69606	.61186	.05	12	20
naphthalene	2.7957	2.5778	.05	8	20
1,2,3-trichlorobenzene	1.3763	1.2483	.05	9	20
dibromofluoromethane	.27969	.27055	.05	3	20
1,2-dichloroethane-d4	.27212	.26689	.05	2	20
toluene-d8	1.2032	1.2061	.05	0	20
4-bromofluorobenzene	.70887	.70289	.05	1	20

FORM VII MCP-8260-10

ANALYTICAL REPORT

Lab Number:	L1014045
Client:	TRC Environmental Consultants Wannalancit Mills 650 Suffolk Street Lowell, MA 01854
ATTN:	David Sullivan
Phone:	(978) 656-3565
Project Name:	CITY OF NEW BEDFORD
Project Number:	115058
Report Date:	09/17/10

Certifications & Approvals: MA (M-MA086), NY NELAC (11148), CT (PH-0574), NH (2003), NJ (MA935), RI (LAO00065), ME (MA0086), PA (Registration #68-03671), USDA (Permit #S-72578), US Army Corps of Engineers, Naval FESC.

Eight Walkup Drive, Westborough, MA 01581-1019
508-898-9220 (Fax) 508-898-9193 800-624-9220 - www.alphalab.com

Project Name: CITY OF NEW BEDFORD
Project Number: 115058

Lab Number: L1014045
Report Date: 09/17/10

Alpha Sample ID	Client ID	Sample Location	Collection Date/Time
L1014045-01	MW-28	NBHS	09/09/10 16:20
L1014045-02	MW-7D	NBHS	09/09/10 14:50
L1014045-03	MW-701	NBHS	09/09/10 13:50
L1014045-04	MW-20	NBHS	09/10/10 10:30
L1014045-05	MW-29	NBHS	09/10/10 11:30
L1014045-06	MW-24	NBHS	09/10/10 12:55
L1014045-07	MW-5	NBHS	09/10/10 14:45
L1014045-08	MW-5D	NBHS	09/10/10 15:25
L1014045-09	TRIP BLANK	NBHS	09/10/10 00:00

Project Name: CITY OF NEW BEDFORD **Lab Number:** L1014045

Project Number: 115058 **Report Date:** 09/17/10

MADEP MCP Response Action Analytical Report Certification

This form provides certifications for all samples performed by MCP methods. Please refer to the Sample Results and Container Information sections of this report for specification of MCP methods used for each analysis. The following questions pertain only to MCP Analytical Methods.

An affirmative response to questions A through F is required for "Presumptive Certainty" status		
A	Were all samples received in a condition consistent with those described on the Chain-of-Custody, properly preserved (including temperature) in the field or laboratory, and prepared/analyzed within method holding times?	YES
B	Were the analytical method(s) and all associated QC requirements specified in the selected CAM protocol(s) followed?	YES
C	Were all required corrective actions and analytical response actions specified in the selected CAM protocol(s) implemented for all identified performance standard non-conformances?	YES
D	Does the laboratory report comply with all the reporting requirements specified in CAM VII A, "Quality Assurance and Quality Control Guidelines for the Acquisition and Reporting of Analytical Data?"	YES
E a.	VPH, EPH, and APH Methods only: Was each method conducted without significant modification(s)? (Refer to the individual method(s) for a list of significant modifications).	N/A
E b.	APH and TO-15 Methods only: Was the complete analyte list reported for each method?	N/A
F	Were all applicable CAM protocol QC and performance standard non-conformances identified and evaluated in a laboratory narrative (including all "No" responses to Questions A through E)?	YES

A response to questions G, H and I is required for "Presumptive Certainty" status		
G	Were the reporting limits at or below all CAM reporting limits specified in the selected CAM protocol(s)?	NO
H	Were all QC performance standards specified in the CAM protocol(s) achieved?	NO
I	Were results reported for the complete analyte list specified in the selected CAM protocol(s)?	YES

For any questions answered "No", please refer to the case narrative section on the following page(s).

Please note that sample matrix information is located in the Sample Results section of this report.

Project Name: CITY OF NEW BEDFORD **Lab Number:** L1014045
Project Number: 115058 **Report Date:** 09/17/10

Case Narrative

The samples were received in accordance with the Chain of Custody and no significant deviations were encountered during the preparation or analysis unless otherwise noted. Sample Receipt, Container Information, and the Chain of Custody are located at the back of the report.

Results contained within this report relate only to the samples submitted under this Alpha Lab Number and meet all of the requirements of NELAC, for all NELAC accredited parameters. The data presented in this report is organized by parameter (i.e. VOC, SVOC, etc.). Sample specific Quality Control data (i.e. Surrogate Spike Recovery) is reported at the end of the target analyte list for each individual sample, followed by the Laboratory Batch Quality Control at the end of each parameter. If a sample was re-analyzed or re-extracted due to a required quality control corrective action and if both sets of data are reported, the Laboratory ID of the re-analysis or re-extraction is designated with an "R" or "RE", respectively. When multiple Batch Quality Control elements are reported (e.g. more than one LCS), the associated samples for each element are noted in the grey shaded header line of each data table. Any Laboratory Batch, Sample Specific % recovery or RPD value that is outside the listed Acceptance Criteria is bolded in the report. Definitions of all data qualifiers and acronyms used in this report are provided in the Glossary located at the back of the report.

Please see the associated ADEx data file for a comparison of laboratory reporting limits that were achieved with the regulatory Numerical Standards requested on the Chain of Custody.

For additional information, please contact Client Services at 800-624-9220.

MCP Related Narratives

Volatile Organics
In reference to question G:
The requested CAM reporting limits were not achieved for Tetrahydrofuran.
In reference to question H:
The WG432277-1 LCS recovery, associated with L1014045-06 and -09, is below the acceptance criteria for Carbon disulfide (68%); however, it has been identified as a "difficult" analyte and is within the 40-160% acceptance limits. The results of the associated samples are reported; however, all results are considered to have a potentially low bias for this compound.
The WG432277-1 LCS recovery, associated with L1014045-06 and -09, is below the individual acceptance criteria for Chloroethane (68%), but within the overall method allowances. The results of the associated

Case Narrative (continued)

samples are reported; however, all results are considered to have a potentially low bias for this compound.
The WG432277-1/-2 LCS/LCSD RPD, associated with L1014045-06 and -09, is above the acceptance criteria for 2-Butanone (22%); however, the individual LCS/LCSD recoveries are within method limits.
The WG432285-2 LCSD recovery, associated with L1014045-04 and -07, is below the acceptance criteria for Carbon disulfide (61%); however, it has been identified as a "difficult" analyte and is within the 40-160% acceptance limits. The results of the associated samples are reported; however, all results are considered to have a potentially low bias for this compound. In addition, the associated WG432285-1/-2 LCS/LCSD RPD is above the acceptance criteria for Carbon disulfide (22%).
The WG432285-2 LCSD recovery, associated with L1014045-04 and -07, is below the individual acceptance criteria for Chloroethane (63%), but within the overall method allowances. The results of the associated samples are reported; however, all results are considered to have a potentially low bias for this compound.
The WG432285-1/-2 LCS/LCSD RPDs, associated with L1014045-04 and -07, are above the acceptance criteria for Tetrachloroethene (23%), 1,1,1-Trichloroethane (22%), Chloromethane (25%), Bromomethane (28%), trans-1,2-Dichloroethene (21%), Trichloroethene (21%), 2,2-Dichloropropane (21%), n-Butylbenzene (30%), sec-Butylbenzene (34%), tert-Butylbenzene (30%), o-Chlorotoluene (21%), Hexachlorobutadiene (29%), Isopropylbenzene (26%), p-Isopropyltoluene (29%), n-Propylbenzene (28%), 1,3,5-Trimethylbenzene (25%) and 1,2,4-Trimethylbenzene (22%); however, the individual LCS/LCSD recoveries are within method limits.
The WG432490-1 LCS recovery, associated with L1014045-03, -05 and -08, is below the acceptance criteria for Carbon disulfide (68%); however, it has been identified as a "difficult" analyte and is within the 40-160% acceptance limits. The results of the associated samples are reported; however, all results are considered to have a potentially low bias for this compound.
The initial calibrations, associated with L1014045-01 through -05, -07 and -08, did not meet the method required minimum response factors for Acetone and 1,4-Dioxane and utilized quadratic fits for Bromoform.
The initial calibration, associated with L1014045-06 and -09, did not meet the method required minimum response factors for 4-Methyl-2-pentanone, Acetone and 1,4-Dioxane and utilized a quadratic fit for 1,1,1,2-Tetrachloroethane and Bromoform.
The continuing calibration standards, associated with L1014045-01 through -09, are outside the acceptance

Project Name: CITY OF NEW BEDFORD **Lab Number:** L1014045
Project Number: 115058 **Report Date:** 09/17/10

Case Narrative (continued)

criteria for several compounds; however, they are within overall method allowances. Copies of the continuing calibration standards are included as an addendum to this report.

Non-MCP Related Narratives

Sulfate
The WG432530-4 MS recovery, performed on L1014045-05, is above the acceptance criteria (160%); however, the associated LCS recovery was within criteria. No further action was taken.

I, the undersigned, attest under the pains and penalties of perjury that, to the best of my knowledge and belief and based upon my personal inquiry of those responsible for providing the information contained in this analytical report, such information is accurate and complete. This certificate of analysis is not complete unless this page accompanies any and all pages of this report.

Authorized Signature: Michelle M. Morris

Title: Technical Director/Representative Date: 09/17/10

ORGANICS

VOLATILES

Project Name: CITY OF NEW BEDFORD **Lab Number:** L1014045

Project Number: 115058 **Report Date:** 09/17/10

SAMPLE RESULTS

Lab ID:	L1014045-01	Date Collected:	09/09/10 16:20
Client ID:	MW-28	Date Received:	09/10/10
Sample Location:	NBHS	Field Prep:	Not Specified
Matrix:	Water		
Analytical Method:	97,8260B		
Analytical Date:	09/14/10 15:38		
Analyst:	MM		

Parameter	Result	Qualifier	Units	RL	MDL	Dilution Factor
MCP Volatile Organics - Westborough Lab						
Methylene chloride	ND		ug/l	2.0	--	1
1,1-Dichloroethane	ND		ug/l	1.0	--	1
Chloroform	ND		ug/l	1.0	--	1
Carbon tetrachloride	ND		ug/l	1.0	--	1
1,2-Dichloropropane	ND		ug/l	1.0	--	1
Dibromochloromethane	ND		ug/l	1.0	--	1
1,1,2-Trichloroethane	ND		ug/l	1.0	--	1
Tetrachloroethene	ND		ug/l	1.0	--	1
Chlorobenzene	38		ug/l	1.0	--	1
Trichlorofluoromethane	ND		ug/l	2.0	--	1
1,2-Dichloroethane	ND		ug/l	1.0	--	1
1,1,1-Trichloroethane	ND		ug/l	1.0	--	1
Bromodichloromethane	ND		ug/l	1.0	--	1
trans-1,3-Dichloropropene	ND		ug/l	0.50	--	1
cis-1,3-Dichloropropene	ND		ug/l	0.50	--	1
1,1-Dichloropropene	ND		ug/l	2.0	--	1
Bromoform	ND		ug/l	2.0	--	1
1,1,2,2-Tetrachloroethane	ND		ug/l	1.0	--	1
Benzene	ND		ug/l	1.0	--	1
Toluene	ND		ug/l	1.0	--	1
Ethylbenzene	ND		ug/l	1.0	--	1
Chloromethane	ND		ug/l	2.0	--	1
Bromomethane	ND		ug/l	2.0	--	1
Vinyl chloride	9.7		ug/l	1.0	--	1
Chloroethane	ND		ug/l	2.0	--	1
1,1-Dichloroethene	ND		ug/l	1.0	--	1
trans-1,2-Dichloroethene	9.2		ug/l	1.0	--	1
Trichloroethene	11		ug/l	1.0	--	1
1,2-Dichlorobenzene	2.0		ug/l	1.0	--	1
1,3-Dichlorobenzene	9.9		ug/l	1.0	--	1

Project Name: CITY OF NEW BEDFORD **Lab Number:** L1014045

Project Number: 115058 **Report Date:** 09/17/10

SAMPLE RESULTS

Lab ID: L1014045-01 Date Collected: 09/09/10 16:20

Client ID: MW-28 Date Received: 09/10/10

Sample Location: NBHS Field Prep: Not Specified

Parameter	Result	Qualifier	Units	RL	MDL	Dilution Factor
MCP Volatile Organics - Westborough Lab						
1,4-Dichlorobenzene	48		ug/l	1.0	--	1
Methyl tert butyl ether	ND		ug/l	2.0	--	1
p/m-Xylene	ND		ug/l	2.0	--	1
o-Xylene	ND		ug/l	1.0	--	1
cis-1,2-Dichloroethene	25		ug/l	1.0	--	1
Dibromomethane	ND		ug/l	2.0	--	1
1,2,3-Trichloropropane	ND		ug/l	2.0	--	1
Styrene	ND		ug/l	1.0	--	1
Dichlorodifluoromethane	ND		ug/l	2.0	--	1
Acetone	ND		ug/l	5.0	--	1
Carbon disulfide	ND		ug/l	2.0	--	1
2-Butanone	ND		ug/l	5.0	--	1
4-Methyl-2-pentanone	ND		ug/l	5.0	--	1
2-Hexanone	ND		ug/l	5.0	--	1
Bromochloromethane	ND		ug/l	2.0	--	1
Tetrahydrofuran	ND		ug/l	10	--	1
2,2-Dichloropropane	ND		ug/l	2.0	--	1
1,2-Dibromoethane	ND		ug/l	2.0	--	1
1,3-Dichloropropane	ND		ug/l	2.0	--	1
1,1,1,2-Tetrachloroethane	ND		ug/l	1.0	--	1
Bromobenzene	ND		ug/l	2.0	--	1
n-Butylbenzene	ND		ug/l	2.0	--	1
sec-Butylbenzene	ND		ug/l	2.0	--	1
tert-Butylbenzene	ND		ug/l	2.0	--	1
o-Chlorotoluene	ND		ug/l	2.0	--	1
p-Chlorotoluene	ND		ug/l	2.0	--	1
1,2-Dibromo-3-chloropropane	ND		ug/l	2.0	--	1
Hexachlorobutadiene	ND		ug/l	0.60	--	1
Isopropylbenzene	ND		ug/l	2.0	--	1
p-Isopropyltoluene	ND		ug/l	2.0	--	1
Naphthalene	ND		ug/l	5.0	--	1
n-Propylbenzene	ND		ug/l	2.0	--	1
1,2,3-Trichlorobenzene	ND		ug/l	2.0	--	1
1,2,4-Trichlorobenzene	ND		ug/l	2.0	--	1
1,3,5-Trimethylbenzene	ND		ug/l	2.0	--	1
1,2,4-Trimethylbenzene	ND		ug/l	2.0	--	1
Ethyl ether	ND		ug/l	2.0	--	1

Project Name: CITY OF NEW BEDFORD **Lab Number:** L1014045

Project Number: 115058 **Report Date:** 09/17/10

SAMPLE RESULTS

Lab ID:	L1014045-01	Date Collected:	09/09/10 16:20
Client ID:	MW-28	Date Received:	09/10/10
Sample Location:	NBHS	Field Prep:	Not Specified

Parameter	Result	Qualifier	Units	RL	MDL	Dilution Factor
MCP Volatile Organics - Westborough Lab						
Isopropyl Ether	ND		ug/l	2.0	--	1
Ethyl-Tert-Butyl-Ether	ND		ug/l	2.0	--	1
Tertiary-Amyl Methyl Ether	ND		ug/l	2.0	--	1
1,4-Dioxane	ND		ug/l	250	--	1

Surrogate	% Recovery	Qualifier	Acceptance Criteria
1,2-Dichloroethane-d4	87		70-130
Toluene-d8	91		70-130
4-Bromofluorobenzene	94		70-130
Dibromofluoromethane	100		70-130

Project Name: CITY OF NEW BEDFORD **Lab Number:** L1014045

Project Number: 115058 **Report Date:** 09/17/10

SAMPLE RESULTS

Lab ID:	L1014045-02	Date Collected:	09/09/10 14:50
Client ID:	MW-7D	Date Received:	09/10/10
Sample Location:	NBHS	Field Prep:	Not Specified
Matrix:	Water		
Analytical Method:	97,8260B		
Analytical Date:	09/14/10 16:10		
Analyst:	MM		

Parameter	Result	Qualifier	Units	RL	MDL	Dilution Factor
MCP Volatile Organics - Westborough Lab						
Methylene chloride	ND		ug/l	2.0	--	1
1,1-Dichloroethane	3.9		ug/l	1.0	--	1
Chloroform	ND		ug/l	1.0	--	1
Carbon tetrachloride	ND		ug/l	1.0	--	1
1,2-Dichloropropane	ND		ug/l	1.0	--	1
Dibromochloromethane	ND		ug/l	1.0	--	1
1,1,2-Trichloroethane	ND		ug/l	1.0	--	1
Tetrachloroethene	1.3		ug/l	1.0	--	1
Chlorobenzene	ND		ug/l	1.0	--	1
Trichlorofluoromethane	ND		ug/l	2.0	--	1
1,2-Dichloroethane	ND		ug/l	1.0	--	1
1,1,1-Trichloroethane	3.9		ug/l	1.0	--	1
Bromodichloromethane	ND		ug/l	1.0	--	1
trans-1,3-Dichloropropene	ND		ug/l	0.50	--	1
cis-1,3-Dichloropropene	ND		ug/l	0.50	--	1
1,1-Dichloropropene	ND		ug/l	2.0	--	1
Bromoform	ND		ug/l	2.0	--	1
1,1,2,2-Tetrachloroethane	ND		ug/l	1.0	--	1
Benzene	ND		ug/l	1.0	--	1
Toluene	ND		ug/l	1.0	--	1
Ethylbenzene	ND		ug/l	1.0	--	1
Chloromethane	ND		ug/l	2.0	--	1
Bromomethane	ND		ug/l	2.0	--	1
Vinyl chloride	ND		ug/l	1.0	--	1
Chloroethane	ND		ug/l	2.0	--	1
1,1-Dichloroethene	ND		ug/l	1.0	--	1
trans-1,2-Dichloroethene	ND		ug/l	1.0	--	1
Trichloroethene	13		ug/l	1.0	--	1
1,2-Dichlorobenzene	ND		ug/l	1.0	--	1
1,3-Dichlorobenzene	ND		ug/l	1.0	--	1

Project Name: CITY OF NEW BEDFORD **Lab Number:** L1014045

Project Number: 115058 **Report Date:** 09/17/10

SAMPLE RESULTS

Lab ID: L1014045-02 Date Collected: 09/09/10 14:50

Client ID: MW-7D Date Received: 09/10/10

Sample Location: NBHS Field Prep: Not Specified

Parameter	Result	Qualifier	Units	RL	MDL	Dilution Factor
MCP Volatile Organics - Westborough Lab						
1,4-Dichlorobenzene	ND		ug/l	1.0	--	1
Methyl tert butyl ether	ND		ug/l	2.0	--	1
p/m-Xylene	ND		ug/l	2.0	--	1
o-Xylene	ND		ug/l	1.0	--	1
cis-1,2-Dichloroethene	2.2		ug/l	1.0	--	1
Dibromomethane	ND		ug/l	2.0	--	1
1,2,3-Trichloropropane	ND		ug/l	2.0	--	1
Styrene	ND		ug/l	1.0	--	1
Dichlorodifluoromethane	ND		ug/l	2.0	--	1
Acetone	ND		ug/l	5.0	--	1
Carbon disulfide	ND		ug/l	2.0	--	1
2-Butanone	ND		ug/l	5.0	--	1
4-Methyl-2-pentanone	ND		ug/l	5.0	--	1
2-Hexanone	ND		ug/l	5.0	--	1
Bromochloromethane	ND		ug/l	2.0	--	1
Tetrahydrofuran	ND		ug/l	10	--	1
2,2-Dichloropropane	ND		ug/l	2.0	--	1
1,2-Dibromoethane	ND		ug/l	2.0	--	1
1,3-Dichloropropane	ND		ug/l	2.0	--	1
1,1,1,2-Tetrachloroethane	ND		ug/l	1.0	--	1
Bromobenzene	ND		ug/l	2.0	--	1
n-Butylbenzene	ND		ug/l	2.0	--	1
sec-Butylbenzene	ND		ug/l	2.0	--	1
tert-Butylbenzene	ND		ug/l	2.0	--	1
o-Chlorotoluene	ND		ug/l	2.0	--	1
p-Chlorotoluene	ND		ug/l	2.0	--	1
1,2-Dibromo-3-chloropropane	ND		ug/l	2.0	--	1
Hexachlorobutadiene	ND		ug/l	0.60	--	1
Isopropylbenzene	ND		ug/l	2.0	--	1
p-Isopropyltoluene	ND		ug/l	2.0	--	1
Naphthalene	ND		ug/l	5.0	--	1
n-Propylbenzene	ND		ug/l	2.0	--	1
1,2,3-Trichlorobenzene	ND		ug/l	2.0	--	1
1,2,4-Trichlorobenzene	ND		ug/l	2.0	--	1
1,3,5-Trimethylbenzene	ND		ug/l	2.0	--	1
1,2,4-Trimethylbenzene	ND		ug/l	2.0	--	1
Ethyl ether	ND		ug/l	2.0	--	1

Project Name: CITY OF NEW BEDFORD **Lab Number:** L1014045

Project Number: 115058 **Report Date:** 09/17/10

SAMPLE RESULTS

Lab ID:	L1014045-02	Date Collected:	09/09/10 14:50
Client ID:	MW-7D	Date Received:	09/10/10
Sample Location:	NBHS	Field Prep:	Not Specified

Parameter	Result	Qualifier	Units	RL	MDL	Dilution Factor
MCP Volatile Organics - Westborough Lab						
Isopropyl Ether	ND		ug/l	2.0	--	1
Ethyl-Tert-Butyl-Ether	ND		ug/l	2.0	--	1
Tertiary-Amyl Methyl Ether	ND		ug/l	2.0	--	1
1,4-Dioxane	ND		ug/l	250	--	1

Surrogate	% Recovery	Qualifier	Acceptance Criteria
1,2-Dichloroethane-d4	91		70-130
Toluene-d8	97		70-130
4-Bromofluorobenzene	107		70-130
Dibromofluoromethane	104		70-130

Project Name: CITY OF NEW BEDFORD **Lab Number:** L1014045

Project Number: 115058 **Report Date:** 09/17/10

SAMPLE RESULTS

Lab ID:	L1014045-03	Date Collected:	09/09/10 13:50
Client ID:	MW-701	Date Received:	09/10/10
Sample Location:	NBHS	Field Prep:	Not Specified
Matrix:	Water		
Analytical Method:	97,8260B		
Analytical Date:	09/15/10 11:04		
Analyst:	MM		

Parameter	Result	Qualifier	Units	RL	MDL	Dilution Factor
MCP Volatile Organics - Westborough Lab						
Methylene chloride	ND		ug/l	2.0	--	1
1,1-Dichloroethane	2.9		ug/l	1.0	--	1
Chloroform	ND		ug/l	1.0	--	1
Carbon tetrachloride	ND		ug/l	1.0	--	1
1,2-Dichloropropane	ND		ug/l	1.0	--	1
Dibromochloromethane	ND		ug/l	1.0	--	1
1,1,2-Trichloroethane	ND		ug/l	1.0	--	1
Tetrachloroethene	ND		ug/l	1.0	--	1
Chlorobenzene	ND		ug/l	1.0	--	1
Trichlorofluoromethane	ND		ug/l	2.0	--	1
1,2-Dichloroethane	ND		ug/l	1.0	--	1
1,1,1-Trichloroethane	2.7		ug/l	1.0	--	1
Bromodichloromethane	ND		ug/l	1.0	--	1
trans-1,3-Dichloropropene	ND		ug/l	0.50	--	1
cis-1,3-Dichloropropene	ND		ug/l	0.50	--	1
1,1-Dichloropropene	ND		ug/l	2.0	--	1
Bromoform	ND		ug/l	2.0	--	1
1,1,2,2-Tetrachloroethane	ND		ug/l	1.0	--	1
Benzene	ND		ug/l	1.0	--	1
Toluene	ND		ug/l	1.0	--	1
Ethylbenzene	ND		ug/l	1.0	--	1
Chloromethane	ND		ug/l	2.0	--	1
Bromomethane	ND		ug/l	2.0	--	1
Vinyl chloride	ND		ug/l	1.0	--	1
Chloroethane	ND		ug/l	2.0	--	1
1,1-Dichloroethene	ND		ug/l	1.0	--	1
trans-1,2-Dichloroethene	ND		ug/l	1.0	--	1
Trichloroethene	10		ug/l	1.0	--	1
1,2-Dichlorobenzene	ND		ug/l	1.0	--	1
1,3-Dichlorobenzene	ND		ug/l	1.0	--	1

Project Name: CITY OF NEW BEDFORD **Lab Number:** L1014045

Project Number: 115058 **Report Date:** 09/17/10

SAMPLE RESULTS

Lab ID: L1014045-03 Date Collected: 09/09/10 13:50

Client ID: MW-701 Date Received: 09/10/10

Sample Location: NBHS Field Prep: Not Specified

Parameter	Result	Qualifier	Units	RL	MDL	Dilution Factor
MCP Volatile Organics - Westborough Lab						
1,4-Dichlorobenzene	ND		ug/l	1.0	--	1
Methyl tert butyl ether	ND		ug/l	2.0	--	1
p/m-Xylene	ND		ug/l	2.0	--	1
o-Xylene	ND		ug/l	1.0	--	1
cis-1,2-Dichloroethene	1.8		ug/l	1.0	--	1
Dibromomethane	ND		ug/l	2.0	--	1
1,2,3-Trichloropropane	ND		ug/l	2.0	--	1
Styrene	ND		ug/l	1.0	--	1
Dichlorodifluoromethane	ND		ug/l	2.0	--	1
Acetone	ND		ug/l	5.0	--	1
Carbon disulfide	ND		ug/l	2.0	--	1
2-Butanone	ND		ug/l	5.0	--	1
4-Methyl-2-pentanone	ND		ug/l	5.0	--	1
2-Hexanone	ND		ug/l	5.0	--	1
Bromochloromethane	ND		ug/l	2.0	--	1
Tetrahydrofuran	ND		ug/l	10	--	1
2,2-Dichloropropane	ND		ug/l	2.0	--	1
1,2-Dibromoethane	ND		ug/l	2.0	--	1
1,3-Dichloropropane	ND		ug/l	2.0	--	1
1,1,1,2-Tetrachloroethane	ND		ug/l	1.0	--	1
Bromobenzene	ND		ug/l	2.0	--	1
n-Butylbenzene	ND		ug/l	2.0	--	1
sec-Butylbenzene	ND		ug/l	2.0	--	1
tert-Butylbenzene	ND		ug/l	2.0	--	1
o-Chlorotoluene	ND		ug/l	2.0	--	1
p-Chlorotoluene	ND		ug/l	2.0	--	1
1,2-Dibromo-3-chloropropane	ND		ug/l	2.0	--	1
Hexachlorobutadiene	ND		ug/l	0.60	--	1
Isopropylbenzene	ND		ug/l	2.0	--	1
p-Isopropyltoluene	ND		ug/l	2.0	--	1
Naphthalene	ND		ug/l	5.0	--	1
n-Propylbenzene	ND		ug/l	2.0	--	1
1,2,3-Trichlorobenzene	ND		ug/l	2.0	--	1
1,2,4-Trichlorobenzene	ND		ug/l	2.0	--	1
1,3,5-Trimethylbenzene	ND		ug/l	2.0	--	1
1,2,4-Trimethylbenzene	ND		ug/l	2.0	--	1
Ethyl ether	ND		ug/l	2.0	--	1

Project Name: CITY OF NEW BEDFORD **Lab Number:** L1014045

Project Number: 115058 **Report Date:** 09/17/10

SAMPLE RESULTS

Lab ID:	L1014045-03	Date Collected:	09/09/10 13:50
Client ID:	MW-701	Date Received:	09/10/10
Sample Location:	NBHS	Field Prep:	Not Specified

Parameter	Result	Qualifier	Units	RL	MDL	Dilution Factor
MCP Volatile Organics - Westborough Lab						
Isopropyl Ether	ND		ug/l	2.0	--	1
Ethyl-Tert-Butyl-Ether	ND		ug/l	2.0	--	1
Tertiary-Amyl Methyl Ether	ND		ug/l	2.0	--	1
1,4-Dioxane	ND		ug/l	250	--	1

Surrogate	% Recovery	Qualifier	Acceptance Criteria
1,2-Dichloroethane-d4	92		70-130
Toluene-d8	96		70-130
4-Bromofluorobenzene	115		70-130
Dibromofluoromethane	104		70-130

Project Name: CITY OF NEW BEDFORD **Lab Number:** L1014045

Project Number: 115058 **Report Date:** 09/17/10

SAMPLE RESULTS

Lab ID:	L1014045-04	Date Collected:	09/10/10 10:30
Client ID:	MW-20	Date Received:	09/10/10
Sample Location:	NBHS	Field Prep:	Not Specified
Matrix:	Water		
Analytical Method:	97,8260B		
Analytical Date:	09/13/10 18:55		
Analyst:	MM		

Parameter	Result	Qualifier	Units	RL	MDL	Dilution Factor
MCP Volatile Organics - Westborough Lab						
Methylene chloride	ND		ug/l	2.0	--	1
1,1-Dichloroethane	ND		ug/l	1.0	--	1
Chloroform	ND		ug/l	1.0	--	1
Carbon tetrachloride	ND		ug/l	1.0	--	1
1,2-Dichloropropane	ND		ug/l	1.0	--	1
Dibromochloromethane	ND		ug/l	1.0	--	1
1,1,2-Trichloroethane	ND		ug/l	1.0	--	1
Tetrachloroethene	ND		ug/l	1.0	--	1
Chlorobenzene	ND		ug/l	1.0	--	1
Trichlorofluoromethane	ND		ug/l	2.0	--	1
1,2-Dichloroethane	ND		ug/l	1.0	--	1
1,1,1-Trichloroethane	ND		ug/l	1.0	--	1
Bromodichloromethane	ND		ug/l	1.0	--	1
trans-1,3-Dichloropropene	ND		ug/l	0.50	--	1
cis-1,3-Dichloropropene	ND		ug/l	0.50	--	1
1,1-Dichloropropene	ND		ug/l	2.0	--	1
Bromoform	ND		ug/l	2.0	--	1
1,1,2,2-Tetrachloroethane	ND		ug/l	1.0	--	1
Benzene	ND		ug/l	1.0	--	1
Toluene	ND		ug/l	1.0	--	1
Ethylbenzene	ND		ug/l	1.0	--	1
Chloromethane	ND		ug/l	2.0	--	1
Bromomethane	ND		ug/l	2.0	--	1
Vinyl chloride	ND		ug/l	1.0	--	1
Chloroethane	ND		ug/l	2.0	--	1
1,1-Dichloroethene	ND		ug/l	1.0	--	1
trans-1,2-Dichloroethene	ND		ug/l	1.0	--	1
Trichloroethene	ND		ug/l	1.0	--	1
1,2-Dichlorobenzene	ND		ug/l	1.0	--	1
1,3-Dichlorobenzene	ND		ug/l	1.0	--	1

Project Name: CITY OF NEW BEDFORD **Lab Number:** L1014045

Project Number: 115058 **Report Date:** 09/17/10

SAMPLE RESULTS

Lab ID: L1014045-04 Date Collected: 09/10/10 10:30

Client ID: MW-20 Date Received: 09/10/10

Sample Location: NBHS Field Prep: Not Specified

Parameter	Result	Qualifier	Units	RL	MDL	Dilution Factor
MCP Volatile Organics - Westborough Lab						
1,4-Dichlorobenzene	ND		ug/l	1.0	--	1
Methyl tert butyl ether	ND		ug/l	2.0	--	1
p/m-Xylene	ND		ug/l	2.0	--	1
o-Xylene	ND		ug/l	1.0	--	1
cis-1,2-Dichloroethene	1.8		ug/l	1.0	--	1
Dibromomethane	ND		ug/l	2.0	--	1
1,2,3-Trichloropropane	ND		ug/l	2.0	--	1
Styrene	ND		ug/l	1.0	--	1
Dichlorodifluoromethane	ND		ug/l	2.0	--	1
Acetone	ND		ug/l	5.0	--	1
Carbon disulfide	ND		ug/l	2.0	--	1
2-Butanone	ND		ug/l	5.0	--	1
4-Methyl-2-pentanone	ND		ug/l	5.0	--	1
2-Hexanone	ND		ug/l	5.0	--	1
Bromochloromethane	ND		ug/l	2.0	--	1
Tetrahydrofuran	ND		ug/l	10	--	1
2,2-Dichloropropane	ND		ug/l	2.0	--	1
1,2-Dibromoethane	ND		ug/l	2.0	--	1
1,3-Dichloropropane	ND		ug/l	2.0	--	1
1,1,1,2-Tetrachloroethane	ND		ug/l	1.0	--	1
Bromobenzene	ND		ug/l	2.0	--	1
n-Butylbenzene	ND		ug/l	2.0	--	1
sec-Butylbenzene	ND		ug/l	2.0	--	1
tert-Butylbenzene	ND		ug/l	2.0	--	1
o-Chlorotoluene	ND		ug/l	2.0	--	1
p-Chlorotoluene	ND		ug/l	2.0	--	1
1,2-Dibromo-3-chloropropane	ND		ug/l	2.0	--	1
Hexachlorobutadiene	ND		ug/l	0.60	--	1
Isopropylbenzene	ND		ug/l	2.0	--	1
p-Isopropyltoluene	ND		ug/l	2.0	--	1
Naphthalene	ND		ug/l	5.0	--	1
n-Propylbenzene	ND		ug/l	2.0	--	1
1,2,3-Trichlorobenzene	ND		ug/l	2.0	--	1
1,2,4-Trichlorobenzene	ND		ug/l	2.0	--	1
1,3,5-Trimethylbenzene	ND		ug/l	2.0	--	1
1,2,4-Trimethylbenzene	ND		ug/l	2.0	--	1
Ethyl ether	ND		ug/l	2.0	--	1

Project Name: CITY OF NEW BEDFORD **Lab Number:** L1014045

Project Number: 115058 **Report Date:** 09/17/10

SAMPLE RESULTS

Lab ID:	L1014045-04	Date Collected:	09/10/10 10:30
Client ID:	MW-20	Date Received:	09/10/10
Sample Location:	NBHS	Field Prep:	Not Specified

Parameter	Result	Qualifier	Units	RL	MDL	Dilution Factor
MCP Volatile Organics - Westborough Lab						
Isopropyl Ether	ND		ug/l	2.0	--	1
Ethyl-Tert-Butyl-Ether	ND		ug/l	2.0	--	1
Tertiary-Amyl Methyl Ether	ND		ug/l	2.0	--	1
1,4-Dioxane	ND		ug/l	250	--	1

Surrogate	% Recovery	Qualifier	Acceptance Criteria
1,2-Dichloroethane-d4	87		70-130
Toluene-d8	98		70-130
4-Bromofluorobenzene	108		70-130
Dibromofluoromethane	108		70-130

Project Name: CITY OF NEW BEDFORD **Lab Number:** L1014045

Project Number: 115058 **Report Date:** 09/17/10

SAMPLE RESULTS

Lab ID:	L1014045-05	Date Collected:	09/10/10 11:30
Client ID:	MW-29	Date Received:	09/10/10
Sample Location:	NBHS	Field Prep:	Not Specified
Matrix:	Water		
Analytical Method:	97,8260B		
Analytical Date:	09/15/10 11:36		
Analyst:	MM		

Parameter	Result	Qualifier	Units	RL	MDL	Dilution Factor
MCP Volatile Organics - Westborough Lab						
Methylene chloride	ND		ug/l	2.0	--	1
1,1-Dichloroethane	ND		ug/l	1.0	--	1
Chloroform	ND		ug/l	1.0	--	1
Carbon tetrachloride	ND		ug/l	1.0	--	1
1,2-Dichloropropane	ND		ug/l	1.0	--	1
Dibromochloromethane	ND		ug/l	1.0	--	1
1,1,2-Trichloroethane	ND		ug/l	1.0	--	1
Tetrachloroethene	ND		ug/l	1.0	--	1
Chlorobenzene	ND		ug/l	1.0	--	1
Trichlorofluoromethane	ND		ug/l	2.0	--	1
1,2-Dichloroethane	ND		ug/l	1.0	--	1
1,1,1-Trichloroethane	ND		ug/l	1.0	--	1
Bromodichloromethane	ND		ug/l	1.0	--	1
trans-1,3-Dichloropropene	ND		ug/l	0.50	--	1
cis-1,3-Dichloropropene	ND		ug/l	0.50	--	1
1,1-Dichloropropene	ND		ug/l	2.0	--	1
Bromoform	ND		ug/l	2.0	--	1
1,1,2,2-Tetrachloroethane	ND		ug/l	1.0	--	1
Benzene	ND		ug/l	1.0	--	1
Toluene	ND		ug/l	1.0	--	1
Ethylbenzene	ND		ug/l	1.0	--	1
Chloromethane	ND		ug/l	2.0	--	1
Bromomethane	ND		ug/l	2.0	--	1
Vinyl chloride	ND		ug/l	1.0	--	1
Chloroethane	ND		ug/l	2.0	--	1
1,1-Dichloroethene	ND		ug/l	1.0	--	1
trans-1,2-Dichloroethene	ND		ug/l	1.0	--	1
Trichloroethene	1.2		ug/l	1.0	--	1
1,2-Dichlorobenzene	ND		ug/l	1.0	--	1
1,3-Dichlorobenzene	ND		ug/l	1.0	--	1

Project Name: CITY OF NEW BEDFORD **Lab Number:** L1014045

Project Number: 115058 **Report Date:** 09/17/10

SAMPLE RESULTS

Lab ID: L1014045-05 Date Collected: 09/10/10 11:30

Client ID: MW-29 Date Received: 09/10/10

Sample Location: NBHS Field Prep: Not Specified

Parameter	Result	Qualifier	Units	RL	MDL	Dilution Factor
MCP Volatile Organics - Westborough Lab						
1,4-Dichlorobenzene	ND		ug/l	1.0	--	1
Methyl tert butyl ether	ND		ug/l	2.0	--	1
p/m-Xylene	ND		ug/l	2.0	--	1
o-Xylene	ND		ug/l	1.0	--	1
cis-1,2-Dichloroethene	ND		ug/l	1.0	--	1
Dibromomethane	ND		ug/l	2.0	--	1
1,2,3-Trichloropropane	ND		ug/l	2.0	--	1
Styrene	ND		ug/l	1.0	--	1
Dichlorodifluoromethane	ND		ug/l	2.0	--	1
Acetone	ND		ug/l	5.0	--	1
Carbon disulfide	ND		ug/l	2.0	--	1
2-Butanone	ND		ug/l	5.0	--	1
4-Methyl-2-pentanone	ND		ug/l	5.0	--	1
2-Hexanone	ND		ug/l	5.0	--	1
Bromochloromethane	ND		ug/l	2.0	--	1
Tetrahydrofuran	ND		ug/l	10	--	1
2,2-Dichloropropane	ND		ug/l	2.0	--	1
1,2-Dibromoethane	ND		ug/l	2.0	--	1
1,3-Dichloropropane	ND		ug/l	2.0	--	1
1,1,1,2-Tetrachloroethane	ND		ug/l	1.0	--	1
Bromobenzene	ND		ug/l	2.0	--	1
n-Butylbenzene	ND		ug/l	2.0	--	1
sec-Butylbenzene	ND		ug/l	2.0	--	1
tert-Butylbenzene	ND		ug/l	2.0	--	1
o-Chlorotoluene	ND		ug/l	2.0	--	1
p-Chlorotoluene	ND		ug/l	2.0	--	1
1,2-Dibromo-3-chloropropane	ND		ug/l	2.0	--	1
Hexachlorobutadiene	ND		ug/l	0.60	--	1
Isopropylbenzene	ND		ug/l	2.0	--	1
p-Isopropyltoluene	ND		ug/l	2.0	--	1
Naphthalene	ND		ug/l	5.0	--	1
n-Propylbenzene	ND		ug/l	2.0	--	1
1,2,3-Trichlorobenzene	ND		ug/l	2.0	--	1
1,2,4-Trichlorobenzene	ND		ug/l	2.0	--	1
1,3,5-Trimethylbenzene	ND		ug/l	2.0	--	1
1,2,4-Trimethylbenzene	ND		ug/l	2.0	--	1
Ethyl ether	ND		ug/l	2.0	--	1

Project Name: CITY OF NEW BEDFORD **Lab Number:** L1014045

Project Number: 115058 **Report Date:** 09/17/10

SAMPLE RESULTS

Lab ID:	L1014045-05	Date Collected:	09/10/10 11:30
Client ID:	MW-29	Date Received:	09/10/10
Sample Location:	NBHS	Field Prep:	Not Specified

Parameter	Result	Qualifier	Units	RL	MDL	Dilution Factor
MCP Volatile Organics - Westborough Lab						
Isopropyl Ether	ND		ug/l	2.0	--	1
Ethyl-Tert-Butyl-Ether	ND		ug/l	2.0	--	1
Tertiary-Amyl Methyl Ether	ND		ug/l	2.0	--	1
1,4-Dioxane	ND		ug/l	250	--	1

Surrogate	% Recovery	Qualifier	Acceptance Criteria
1,2-Dichloroethane-d4	95		70-130
Toluene-d8	97		70-130
4-Bromofluorobenzene	111		70-130
Dibromofluoromethane	110		70-130

Project Name: CITY OF NEW BEDFORD **Lab Number:** L1014045

Project Number: 115058 **Report Date:** 09/17/10

SAMPLE RESULTS

Lab ID:	L1014045-06	Date Collected:	09/10/10 12:55
Client ID:	MW-24	Date Received:	09/10/10
Sample Location:	NBHS	Field Prep:	Not Specified
Matrix:	Water		
Analytical Method:	97,8260B		
Analytical Date:	09/13/10 19:11		
Analyst:	MM		

Parameter	Result	Qualifier	Units	RL	MDL	Dilution Factor
MCP Volatile Organics - Westborough Lab						
Methylene chloride	ND		ug/l	2.0	--	1
1,1-Dichloroethane	ND		ug/l	1.0	--	1
Chloroform	ND		ug/l	1.0	--	1
Carbon tetrachloride	ND		ug/l	1.0	--	1
1,2-Dichloropropane	ND		ug/l	1.0	--	1
Dibromochloromethane	ND		ug/l	1.0	--	1
1,1,2-Trichloroethane	ND		ug/l	1.0	--	1
Tetrachloroethene	ND		ug/l	1.0	--	1
Chlorobenzene	ND		ug/l	1.0	--	1
Trichlorofluoromethane	ND		ug/l	2.0	--	1
1,2-Dichloroethane	ND		ug/l	1.0	--	1
1,1,1-Trichloroethane	ND		ug/l	1.0	--	1
Bromodichloromethane	ND		ug/l	1.0	--	1
trans-1,3-Dichloropropene	ND		ug/l	0.50	--	1
cis-1,3-Dichloropropene	ND		ug/l	0.50	--	1
1,1-Dichloropropene	ND		ug/l	2.0	--	1
Bromoform	ND		ug/l	2.0	--	1
1,1,2,2-Tetrachloroethane	ND		ug/l	1.0	--	1
Benzene	ND		ug/l	1.0	--	1
Toluene	ND		ug/l	1.0	--	1
Ethylbenzene	ND		ug/l	1.0	--	1
Chloromethane	ND		ug/l	2.0	--	1
Bromomethane	ND		ug/l	2.0	--	1
Vinyl chloride	1.5		ug/l	1.0	--	1
Chloroethane	ND		ug/l	2.0	--	1
1,1-Dichloroethene	ND		ug/l	1.0	--	1
trans-1,2-Dichloroethene	ND		ug/l	1.0	--	1
Trichloroethene	ND		ug/l	1.0	--	1
1,2-Dichlorobenzene	ND		ug/l	1.0	--	1
1,3-Dichlorobenzene	ND		ug/l	1.0	--	1

Project Name: CITY OF NEW BEDFORD **Lab Number:** L1014045

Project Number: 115058 **Report Date:** 09/17/10

SAMPLE RESULTS

Lab ID: L1014045-06 Date Collected: 09/10/10 12:55

Client ID: MW-24 Date Received: 09/10/10

Sample Location: NBHS Field Prep: Not Specified

Parameter	Result	Qualifier	Units	RL	MDL	Dilution Factor
MCP Volatile Organics - Westborough Lab						
1,4-Dichlorobenzene	ND		ug/l	1.0	--	1
Methyl tert butyl ether	ND		ug/l	2.0	--	1
p/m-Xylene	ND		ug/l	2.0	--	1
o-Xylene	ND		ug/l	1.0	--	1
cis-1,2-Dichloroethene	ND		ug/l	1.0	--	1
Dibromomethane	ND		ug/l	2.0	--	1
1,2,3-Trichloropropane	ND		ug/l	2.0	--	1
Styrene	ND		ug/l	1.0	--	1
Dichlorodifluoromethane	ND		ug/l	2.0	--	1
Acetone	ND		ug/l	5.0	--	1
Carbon disulfide	ND		ug/l	2.0	--	1
2-Butanone	ND		ug/l	5.0	--	1
4-Methyl-2-pentanone	ND		ug/l	5.0	--	1
2-Hexanone	ND		ug/l	5.0	--	1
Bromochloromethane	ND		ug/l	2.0	--	1
Tetrahydrofuran	ND		ug/l	10	--	1
2,2-Dichloropropane	ND		ug/l	2.0	--	1
1,2-Dibromoethane	ND		ug/l	2.0	--	1
1,3-Dichloropropane	ND		ug/l	2.0	--	1
1,1,1,2-Tetrachloroethane	ND		ug/l	1.0	--	1
Bromobenzene	ND		ug/l	2.0	--	1
n-Butylbenzene	ND		ug/l	2.0	--	1
sec-Butylbenzene	ND		ug/l	2.0	--	1
tert-Butylbenzene	ND		ug/l	2.0	--	1
o-Chlorotoluene	ND		ug/l	2.0	--	1
p-Chlorotoluene	ND		ug/l	2.0	--	1
1,2-Dibromo-3-chloropropane	ND		ug/l	2.0	--	1
Hexachlorobutadiene	ND		ug/l	0.60	--	1
Isopropylbenzene	ND		ug/l	2.0	--	1
p-Isopropyltoluene	ND		ug/l	2.0	--	1
Naphthalene	ND		ug/l	5.0	--	1
n-Propylbenzene	ND		ug/l	2.0	--	1
1,2,3-Trichlorobenzene	ND		ug/l	2.0	--	1
1,2,4-Trichlorobenzene	ND		ug/l	2.0	--	1
1,3,5-Trimethylbenzene	ND		ug/l	2.0	--	1
1,2,4-Trimethylbenzene	ND		ug/l	2.0	--	1
Ethyl ether	ND		ug/l	2.0	--	1

Project Name: CITY OF NEW BEDFORD **Lab Number:** L1014045

Project Number: 115058 **Report Date:** 09/17/10

SAMPLE RESULTS

Lab ID:	L1014045-06	Date Collected:	09/10/10 12:55
Client ID:	MW-24	Date Received:	09/10/10
Sample Location:	NBHS	Field Prep:	Not Specified

Parameter	Result	Qualifier	Units	RL	MDL	Dilution Factor
MCP Volatile Organics - Westborough Lab						
Isopropyl Ether	ND		ug/l	2.0	--	1
Ethyl-Tert-Butyl-Ether	ND		ug/l	2.0	--	1
Tertiary-Amyl Methyl Ether	ND		ug/l	2.0	--	1
1,4-Dioxane	ND		ug/l	250	--	1

Surrogate	% Recovery	Qualifier	Acceptance Criteria
1,2-Dichloroethane-d4	96		70-130
Toluene-d8	94		70-130
4-Bromofluorobenzene	109		70-130
Dibromofluoromethane	104		70-130

Project Name: CITY OF NEW BEDFORD **Lab Number:** L1014045

Project Number: 115058 **Report Date:** 09/17/10

SAMPLE RESULTS

Lab ID:	L1014045-07	Date Collected:	09/10/10 14:45
Client ID:	MW-5	Date Received:	09/10/10
Sample Location:	NBHS	Field Prep:	Not Specified
Matrix:	Water		
Analytical Method:	97,8260B		
Analytical Date:	09/13/10 19:27		
Analyst:	MM		

Parameter	Result	Qualifier	Units	RL	MDL	Dilution Factor
MCP Volatile Organics - Westborough Lab						
Methylene chloride	ND		ug/l	2.0	--	1
1,1-Dichloroethane	ND		ug/l	1.0	--	1
Chloroform	ND		ug/l	1.0	--	1
Carbon tetrachloride	ND		ug/l	1.0	--	1
1,2-Dichloropropane	ND		ug/l	1.0	--	1
Dibromochloromethane	ND		ug/l	1.0	--	1
1,1,2-Trichloroethane	ND		ug/l	1.0	--	1
Tetrachloroethene	ND		ug/l	1.0	--	1
Chlorobenzene	ND		ug/l	1.0	--	1
Trichlorofluoromethane	ND		ug/l	2.0	--	1
1,2-Dichloroethane	ND		ug/l	1.0	--	1
1,1,1-Trichloroethane	ND		ug/l	1.0	--	1
Bromodichloromethane	ND		ug/l	1.0	--	1
trans-1,3-Dichloropropene	ND		ug/l	0.50	--	1
cis-1,3-Dichloropropene	ND		ug/l	0.50	--	1
1,1-Dichloropropene	ND		ug/l	2.0	--	1
Bromoform	ND		ug/l	2.0	--	1
1,1,2,2-Tetrachloroethane	ND		ug/l	1.0	--	1
Benzene	ND		ug/l	1.0	--	1
Toluene	ND		ug/l	1.0	--	1
Ethylbenzene	ND		ug/l	1.0	--	1
Chloromethane	ND		ug/l	2.0	--	1
Bromomethane	ND		ug/l	2.0	--	1
Vinyl chloride	ND		ug/l	1.0	--	1
Chloroethane	ND		ug/l	2.0	--	1
1,1-Dichloroethene	ND		ug/l	1.0	--	1
trans-1,2-Dichloroethene	ND		ug/l	1.0	--	1
Trichloroethene	ND		ug/l	1.0	--	1
1,2-Dichlorobenzene	ND		ug/l	1.0	--	1
1,3-Dichlorobenzene	ND		ug/l	1.0	--	1

Project Name: CITY OF NEW BEDFORD **Lab Number:** L1014045

Project Number: 115058 **Report Date:** 09/17/10

SAMPLE RESULTS

Lab ID: L1014045-07 Date Collected: 09/10/10 14:45

Client ID: MW-5 Date Received: 09/10/10

Sample Location: NBHS Field Prep: Not Specified

Parameter	Result	Qualifier	Units	RL	MDL	Dilution Factor
MCP Volatile Organics - Westborough Lab						
1,4-Dichlorobenzene	ND		ug/l	1.0	--	1
Methyl tert butyl ether	ND		ug/l	2.0	--	1
p/m-Xylene	ND		ug/l	2.0	--	1
o-Xylene	ND		ug/l	1.0	--	1
cis-1,2-Dichloroethene	7.1		ug/l	1.0	--	1
Dibromomethane	ND		ug/l	2.0	--	1
1,2,3-Trichloropropane	ND		ug/l	2.0	--	1
Styrene	ND		ug/l	1.0	--	1
Dichlorodifluoromethane	ND		ug/l	2.0	--	1
Acetone	ND		ug/l	5.0	--	1
Carbon disulfide	ND		ug/l	2.0	--	1
2-Butanone	ND		ug/l	5.0	--	1
4-Methyl-2-pentanone	ND		ug/l	5.0	--	1
2-Hexanone	ND		ug/l	5.0	--	1
Bromochloromethane	ND		ug/l	2.0	--	1
Tetrahydrofuran	ND		ug/l	10	--	1
2,2-Dichloropropane	ND		ug/l	2.0	--	1
1,2-Dibromoethane	ND		ug/l	2.0	--	1
1,3-Dichloropropane	ND		ug/l	2.0	--	1
1,1,1,2-Tetrachloroethane	ND		ug/l	1.0	--	1
Bromobenzene	ND		ug/l	2.0	--	1
n-Butylbenzene	ND		ug/l	2.0	--	1
sec-Butylbenzene	ND		ug/l	2.0	--	1
tert-Butylbenzene	ND		ug/l	2.0	--	1
o-Chlorotoluene	ND		ug/l	2.0	--	1
p-Chlorotoluene	ND		ug/l	2.0	--	1
1,2-Dibromo-3-chloropropane	ND		ug/l	2.0	--	1
Hexachlorobutadiene	ND		ug/l	0.60	--	1
Isopropylbenzene	ND		ug/l	2.0	--	1
p-Isopropyltoluene	ND		ug/l	2.0	--	1
Naphthalene	ND		ug/l	5.0	--	1
n-Propylbenzene	ND		ug/l	2.0	--	1
1,2,3-Trichlorobenzene	ND		ug/l	2.0	--	1
1,2,4-Trichlorobenzene	ND		ug/l	2.0	--	1
1,3,5-Trimethylbenzene	ND		ug/l	2.0	--	1
1,2,4-Trimethylbenzene	ND		ug/l	2.0	--	1
Ethyl ether	ND		ug/l	2.0	--	1

Project Name: CITY OF NEW BEDFORD **Lab Number:** L1014045

Project Number: 115058 **Report Date:** 09/17/10

SAMPLE RESULTS

Lab ID:	L1014045-07	Date Collected:	09/10/10 14:45
Client ID:	MW-5	Date Received:	09/10/10
Sample Location:	NBHS	Field Prep:	Not Specified

Parameter	Result	Qualifier	Units	RL	MDL	Dilution Factor
MCP Volatile Organics - Westborough Lab						
Isopropyl Ether	ND		ug/l	2.0	--	1
Ethyl-Tert-Butyl-Ether	ND		ug/l	2.0	--	1
Tertiary-Amyl Methyl Ether	ND		ug/l	2.0	--	1
1,4-Dioxane	ND		ug/l	250	--	1

Surrogate	% Recovery	Qualifier	Acceptance Criteria
1,2-Dichloroethane-d4	94		70-130
Toluene-d8	100		70-130
4-Bromofluorobenzene	105		70-130
Dibromofluoromethane	106		70-130

Project Name: CITY OF NEW BEDFORD **Lab Number:** L1014045

Project Number: 115058 **Report Date:** 09/17/10

SAMPLE RESULTS

Lab ID:	L1014045-08	Date Collected:	09/10/10 15:25
Client ID:	MW-5D	Date Received:	09/10/10
Sample Location:	NBHS	Field Prep:	Not Specified
Matrix:	Water		
Analytical Method:	97,8260B		
Analytical Date:	09/15/10 12:08		
Analyst:	MM		

Parameter	Result	Qualifier	Units	RL	MDL	Dilution Factor
MCP Volatile Organics - Westborough Lab						
Methylene chloride	ND		ug/l	2.0	--	1
1,1-Dichloroethane	ND		ug/l	1.0	--	1
Chloroform	ND		ug/l	1.0	--	1
Carbon tetrachloride	ND		ug/l	1.0	--	1
1,2-Dichloropropane	ND		ug/l	1.0	--	1
Dibromochloromethane	ND		ug/l	1.0	--	1
1,1,2-Trichloroethane	ND		ug/l	1.0	--	1
Tetrachloroethene	ND		ug/l	1.0	--	1
Chlorobenzene	ND		ug/l	1.0	--	1
Trichlorofluoromethane	ND		ug/l	2.0	--	1
1,2-Dichloroethane	ND		ug/l	1.0	--	1
1,1,1-Trichloroethane	ND		ug/l	1.0	--	1
Bromodichloromethane	ND		ug/l	1.0	--	1
trans-1,3-Dichloropropene	ND		ug/l	0.50	--	1
cis-1,3-Dichloropropene	ND		ug/l	0.50	--	1
1,1-Dichloropropene	ND		ug/l	2.0	--	1
Bromoform	ND		ug/l	2.0	--	1
1,1,2,2-Tetrachloroethane	ND		ug/l	1.0	--	1
Benzene	ND		ug/l	1.0	--	1
Toluene	ND		ug/l	1.0	--	1
Ethylbenzene	ND		ug/l	1.0	--	1
Chloromethane	ND		ug/l	2.0	--	1
Bromomethane	ND		ug/l	2.0	--	1
Vinyl chloride	ND		ug/l	1.0	--	1
Chloroethane	ND		ug/l	2.0	--	1
1,1-Dichloroethene	ND		ug/l	1.0	--	1
trans-1,2-Dichloroethene	ND		ug/l	1.0	--	1
Trichloroethene	1.1		ug/l	1.0	--	1
1,2-Dichlorobenzene	ND		ug/l	1.0	--	1
1,3-Dichlorobenzene	ND		ug/l	1.0	--	1

Project Name: CITY OF NEW BEDFORD **Lab Number:** L1014045

Project Number: 115058 **Report Date:** 09/17/10

SAMPLE RESULTS

Lab ID: L1014045-08 Date Collected: 09/10/10 15:25

Client ID: MW-5D Date Received: 09/10/10

Sample Location: NBHS Field Prep: Not Specified

Parameter	Result	Qualifier	Units	RL	MDL	Dilution Factor
MCP Volatile Organics - Westborough Lab						
1,4-Dichlorobenzene	ND		ug/l	1.0	--	1
Methyl tert butyl ether	ND		ug/l	2.0	--	1
p/m-Xylene	ND		ug/l	2.0	--	1
o-Xylene	ND		ug/l	1.0	--	1
cis-1,2-Dichloroethene	ND		ug/l	1.0	--	1
Dibromomethane	ND		ug/l	2.0	--	1
1,2,3-Trichloropropane	ND		ug/l	2.0	--	1
Styrene	ND		ug/l	1.0	--	1
Dichlorodifluoromethane	ND		ug/l	2.0	--	1
Acetone	ND		ug/l	5.0	--	1
Carbon disulfide	ND		ug/l	2.0	--	1
2-Butanone	ND		ug/l	5.0	--	1
4-Methyl-2-pentanone	ND		ug/l	5.0	--	1
2-Hexanone	ND		ug/l	5.0	--	1
Bromochloromethane	ND		ug/l	2.0	--	1
Tetrahydrofuran	ND		ug/l	10	--	1
2,2-Dichloropropane	ND		ug/l	2.0	--	1
1,2-Dibromoethane	ND		ug/l	2.0	--	1
1,3-Dichloropropane	ND		ug/l	2.0	--	1
1,1,1,2-Tetrachloroethane	ND		ug/l	1.0	--	1
Bromobenzene	ND		ug/l	2.0	--	1
n-Butylbenzene	ND		ug/l	2.0	--	1
sec-Butylbenzene	ND		ug/l	2.0	--	1
tert-Butylbenzene	ND		ug/l	2.0	--	1
o-Chlorotoluene	ND		ug/l	2.0	--	1
p-Chlorotoluene	ND		ug/l	2.0	--	1
1,2-Dibromo-3-chloropropane	ND		ug/l	2.0	--	1
Hexachlorobutadiene	ND		ug/l	0.60	--	1
Isopropylbenzene	ND		ug/l	2.0	--	1
p-Isopropyltoluene	ND		ug/l	2.0	--	1
Naphthalene	ND		ug/l	5.0	--	1
n-Propylbenzene	ND		ug/l	2.0	--	1
1,2,3-Trichlorobenzene	ND		ug/l	2.0	--	1
1,2,4-Trichlorobenzene	ND		ug/l	2.0	--	1
1,3,5-Trimethylbenzene	ND		ug/l	2.0	--	1
1,2,4-Trimethylbenzene	ND		ug/l	2.0	--	1
Ethyl ether	ND		ug/l	2.0	--	1

Project Name: CITY OF NEW BEDFORD **Lab Number:** L1014045

Project Number: 115058 **Report Date:** 09/17/10

SAMPLE RESULTS

Lab ID:	L1014045-08	Date Collected:	09/10/10 15:25
Client ID:	MW-5D	Date Received:	09/10/10
Sample Location:	NBHS	Field Prep:	Not Specified

Parameter	Result	Qualifier	Units	RL	MDL	Dilution Factor
MCP Volatile Organics - Westborough Lab						
Isopropyl Ether	ND		ug/l	2.0	--	1
Ethyl-Tert-Butyl-Ether	ND		ug/l	2.0	--	1
Tertiary-Amyl Methyl Ether	ND		ug/l	2.0	--	1
1,4-Dioxane	ND		ug/l	250	--	1

Surrogate	% Recovery	Qualifier	Acceptance Criteria
1,2-Dichloroethane-d4	98		70-130
Toluene-d8	97		70-130
4-Bromofluorobenzene	102		70-130
Dibromofluoromethane	108		70-130

Project Name: CITY OF NEW BEDFORD **Lab Number:** L1014045

Project Number: 115058 **Report Date:** 09/17/10

SAMPLE RESULTS

Lab ID:	L1014045-09	Date Collected:	09/10/10 00:00
Client ID:	TRIP BLANK	Date Received:	09/10/10
Sample Location:	NBHS	Field Prep:	Not Specified
Matrix:	Water		
Analytical Method:	97,8260B		
Analytical Date:	09/13/10 19:44		
Analyst:	MM		

Parameter	Result	Qualifier	Units	RL	MDL	Dilution Factor
MCP Volatile Organics - Westborough Lab						
Methylene chloride	ND		ug/l	2.0	--	1
1,1-Dichloroethane	ND		ug/l	1.0	--	1
Chloroform	ND		ug/l	1.0	--	1
Carbon tetrachloride	ND		ug/l	1.0	--	1
1,2-Dichloropropane	ND		ug/l	1.0	--	1
Dibromochloromethane	ND		ug/l	1.0	--	1
1,1,2-Trichloroethane	ND		ug/l	1.0	--	1
Tetrachloroethene	ND		ug/l	1.0	--	1
Chlorobenzene	ND		ug/l	1.0	--	1
Trichlorofluoromethane	ND		ug/l	2.0	--	1
1,2-Dichloroethane	ND		ug/l	1.0	--	1
1,1,1-Trichloroethane	ND		ug/l	1.0	--	1
Bromodichloromethane	ND		ug/l	1.0	--	1
trans-1,3-Dichloropropene	ND		ug/l	0.50	--	1
cis-1,3-Dichloropropene	ND		ug/l	0.50	--	1
1,1-Dichloropropene	ND		ug/l	2.0	--	1
Bromoform	ND		ug/l	2.0	--	1
1,1,2,2-Tetrachloroethane	ND		ug/l	1.0	--	1
Benzene	ND		ug/l	1.0	--	1
Toluene	ND		ug/l	1.0	--	1
Ethylbenzene	ND		ug/l	1.0	--	1
Chloromethane	ND		ug/l	2.0	--	1
Bromomethane	ND		ug/l	2.0	--	1
Vinyl chloride	ND		ug/l	1.0	--	1
Chloroethane	ND		ug/l	2.0	--	1
1,1-Dichloroethene	ND		ug/l	1.0	--	1
trans-1,2-Dichloroethene	ND		ug/l	1.0	--	1
Trichloroethene	ND		ug/l	1.0	--	1
1,2-Dichlorobenzene	ND		ug/l	1.0	--	1
1,3-Dichlorobenzene	ND		ug/l	1.0	--	1

Project Name: CITY OF NEW BEDFORD **Lab Number:** L1014045

Project Number: 115058 **Report Date:** 09/17/10

SAMPLE RESULTS

Lab ID: L1014045-09 Date Collected: 09/10/10 00:00

Client ID: TRIP BLANK Date Received: 09/10/10

Sample Location: NBHS Field Prep: Not Specified

Parameter	Result	Qualifier	Units	RL	MDL	Dilution Factor
MCP Volatile Organics - Westborough Lab						
1,4-Dichlorobenzene	ND		ug/l	1.0	--	1
Methyl tert butyl ether	ND		ug/l	2.0	--	1
p/m-Xylene	ND		ug/l	2.0	--	1
o-Xylene	ND		ug/l	1.0	--	1
cis-1,2-Dichloroethene	ND		ug/l	1.0	--	1
Dibromomethane	ND		ug/l	2.0	--	1
1,2,3-Trichloropropane	ND		ug/l	2.0	--	1
Styrene	ND		ug/l	1.0	--	1
Dichlorodifluoromethane	ND		ug/l	2.0	--	1
Acetone	ND		ug/l	5.0	--	1
Carbon disulfide	ND		ug/l	2.0	--	1
2-Butanone	ND		ug/l	5.0	--	1
4-Methyl-2-pentanone	ND		ug/l	5.0	--	1
2-Hexanone	ND		ug/l	5.0	--	1
Bromochloromethane	ND		ug/l	2.0	--	1
Tetrahydrofuran	ND		ug/l	10	--	1
2,2-Dichloropropane	ND		ug/l	2.0	--	1
1,2-Dibromoethane	ND		ug/l	2.0	--	1
1,3-Dichloropropane	ND		ug/l	2.0	--	1
1,1,1,2-Tetrachloroethane	ND		ug/l	1.0	--	1
Bromobenzene	ND		ug/l	2.0	--	1
n-Butylbenzene	ND		ug/l	2.0	--	1
sec-Butylbenzene	ND		ug/l	2.0	--	1
tert-Butylbenzene	ND		ug/l	2.0	--	1
o-Chlorotoluene	ND		ug/l	2.0	--	1
p-Chlorotoluene	ND		ug/l	2.0	--	1
1,2-Dibromo-3-chloropropane	ND		ug/l	2.0	--	1
Hexachlorobutadiene	ND		ug/l	0.60	--	1
Isopropylbenzene	ND		ug/l	2.0	--	1
p-Isopropyltoluene	ND		ug/l	2.0	--	1
Naphthalene	ND		ug/l	5.0	--	1
n-Propylbenzene	ND		ug/l	2.0	--	1
1,2,3-Trichlorobenzene	ND		ug/l	2.0	--	1
1,2,4-Trichlorobenzene	ND		ug/l	2.0	--	1
1,3,5-Trimethylbenzene	ND		ug/l	2.0	--	1
1,2,4-Trimethylbenzene	ND		ug/l	2.0	--	1
Ethyl ether	ND		ug/l	2.0	--	1

Project Name: CITY OF NEW BEDFORD **Lab Number:** L1014045

Project Number: 115058 **Report Date:** 09/17/10

SAMPLE RESULTS

Lab ID:	L1014045-09	Date Collected:	09/10/10 00:00
Client ID:	TRIP BLANK	Date Received:	09/10/10
Sample Location:	NBHS	Field Prep:	Not Specified

Parameter	Result	Qualifier	Units	RL	MDL	Dilution Factor
MCP Volatile Organics - Westborough Lab						
Isopropyl Ether	ND		ug/l	2.0	--	1
Ethyl-Tert-Butyl-Ether	ND		ug/l	2.0	--	1
Tertiary-Amyl Methyl Ether	ND		ug/l	2.0	--	1
1,4-Dioxane	ND		ug/l	250	--	1

Surrogate	% Recovery	Qualifier	Acceptance Criteria
1,2-Dichloroethane-d4	92		70-130
Toluene-d8	98		70-130
4-Bromofluorobenzene	103		70-130
Dibromofluoromethane	104		70-130

Project Name: CITY OF NEW BEDFORD **Lab Number:** L1014045

Project Number: 115058 **Report Date:** 09/17/10

Method Blank Analysis
Batch Quality Control

Analytical Method: 97,8260B
Analytical Date: 09/13/10 10:04
Analyst: MM

Parameter	Result	Qualifier	Units	RL	MDL
MCP Volatile Organics - Westborough Lab for sample(s): 06,09 Batch: WG432277-3					
Methylene chloride	ND		ug/l	2.0	--
1,1-Dichloroethane	ND		ug/l	1.0	--
Chloroform	ND		ug/l	1.0	--
Carbon tetrachloride	ND		ug/l	1.0	--
1,2-Dichloropropane	ND		ug/l	1.0	--
Dibromochloromethane	ND		ug/l	1.0	--
1,1,2-Trichloroethane	ND		ug/l	1.0	--
Tetrachloroethene	ND		ug/l	1.0	--
Chlorobenzene	ND		ug/l	1.0	--
Trichlorofluoromethane	ND		ug/l	2.0	--
1,2-Dichloroethane	ND		ug/l	1.0	--
1,1,1-Trichloroethane	ND		ug/l	1.0	--
Bromodichloromethane	ND		ug/l	1.0	--
trans-1,3-Dichloropropene	ND		ug/l	0.50	--
cis-1,3-Dichloropropene	ND		ug/l	0.50	--
1,1-Dichloropropene	ND		ug/l	2.0	--
Bromoform	ND		ug/l	2.0	--
1,1,2,2-Tetrachloroethane	ND		ug/l	1.0	--
Benzene	ND		ug/l	1.0	--
Toluene	ND		ug/l	1.0	--
Ethylbenzene	ND		ug/l	1.0	--
Chloromethane	ND		ug/l	2.0	--
Bromomethane	ND		ug/l	2.0	--
Vinyl chloride	ND		ug/l	1.0	--
Chloroethane	ND		ug/l	2.0	--
1,1-Dichloroethene	ND		ug/l	1.0	--
trans-1,2-Dichloroethene	ND		ug/l	1.0	--
Trichloroethene	ND		ug/l	1.0	--
1,2-Dichlorobenzene	ND		ug/l	1.0	--
1,3-Dichlorobenzene	ND		ug/l	1.0	--
1,4-Dichlorobenzene	ND		ug/l	1.0	--

Project Name: CITY OF NEW BEDFORD **Lab Number:** L1014045

Project Number: 115058 **Report Date:** 09/17/10

Method Blank Analysis
Batch Quality Control

Analytical Method: 97,8260B
Analytical Date: 09/13/10 10:04
Analyst: MM

Parameter	Result	Qualifier	Units	RL	MDL
MCP Volatile Organics - Westborough Lab for sample(s): 06,09 Batch: WG432277-3					
Methyl tert butyl ether	ND		ug/l	2.0	--
p/m-Xylene	ND		ug/l	2.0	--
o-Xylene	ND		ug/l	1.0	--
cis-1,2-Dichloroethene	ND		ug/l	1.0	--
Dibromomethane	ND		ug/l	2.0	--
1,2,3-Trichloropropane	ND		ug/l	2.0	--
Styrene	ND		ug/l	1.0	--
Dichlorodifluoromethane	ND		ug/l	2.0	--
Acetone	ND		ug/l	5.0	--
Carbon disulfide	ND		ug/l	2.0	--
2-Butanone	ND		ug/l	5.0	--
4-Methyl-2-pentanone	ND		ug/l	5.0	--
2-Hexanone	ND		ug/l	5.0	--
Bromochloromethane	ND		ug/l	2.0	--
Tetrahydrofuran	ND		ug/l	10	--
2,2-Dichloropropane	ND		ug/l	2.0	--
1,2-Dibromoethane	ND		ug/l	2.0	--
1,3-Dichloropropane	ND		ug/l	2.0	--
1,1,1,2-Tetrachloroethane	ND		ug/l	1.0	--
Bromobenzene	ND		ug/l	2.0	--
n-Butylbenzene	ND		ug/l	2.0	--
sec-Butylbenzene	ND		ug/l	2.0	--
tert-Butylbenzene	ND		ug/l	2.0	--
o-Chlorotoluene	ND		ug/l	2.0	--
p-Chlorotoluene	ND		ug/l	2.0	--
1,2-Dibromo-3-chloropropane	ND		ug/l	2.0	--
Hexachlorobutadiene	ND		ug/l	0.60	--
Isopropylbenzene	ND		ug/l	2.0	--
p-Isopropyltoluene	ND		ug/l	2.0	--
Naphthalene	ND		ug/l	5.0	--
n-Propylbenzene	ND		ug/l	2.0	--

Project Name: CITY OF NEW BEDFORD **Lab Number:** L1014045

Project Number: 115058 **Report Date:** 09/17/10

Method Blank Analysis
Batch Quality Control

Analytical Method: 97,8260B
Analytical Date: 09/13/10 10:04
Analyst: MM

Parameter	Result	Qualifier	Units	RL	MDL
MCP Volatile Organics - Westborough Lab for sample(s): 06,09 Batch: WG432277-3					
1,2,3-Trichlorobenzene	ND		ug/l	2.0	--
1,2,4-Trichlorobenzene	ND		ug/l	2.0	--
1,3,5-Trimethylbenzene	ND		ug/l	2.0	--
1,2,4-Trimethylbenzene	ND		ug/l	2.0	--
Ethyl ether	ND		ug/l	2.0	--
Isopropyl Ether	ND		ug/l	2.0	--
Ethyl-Tert-Butyl-Ether	ND		ug/l	2.0	--
Tertiary-Amyl Methyl Ether	ND		ug/l	2.0	--
1,4-Dioxane	ND		ug/l	250	--

Surrogate	%Recovery	Qualifier	Acceptance Criteria
1,2-Dichloroethane-d4	95		70-130
Toluene-d8	97		70-130
4-Bromofluorobenzene	106		70-130
Dibromofluoromethane	105		70-130

Project Name: CITY OF NEW BEDFORD **Lab Number:** L1014045

Project Number: 115058 **Report Date:** 09/17/10

Method Blank Analysis
Batch Quality Control

Analytical Method: 97,8260B
Analytical Date: 09/13/10 09:48
Analyst: MM

Parameter	Result	Qualifier	Units	RL	MDL
MCP Volatile Organics - Westborough Lab for sample(s): 04,07 Batch: WG432285-3					
Methylene chloride	ND		ug/l	2.0	--
1,1-Dichloroethane	ND		ug/l	1.0	--
Chloroform	ND		ug/l	1.0	--
Carbon tetrachloride	ND		ug/l	1.0	--
1,2-Dichloropropane	ND		ug/l	1.0	--
Dibromochloromethane	ND		ug/l	1.0	--
1,1,2-Trichloroethane	ND		ug/l	1.0	--
Tetrachloroethene	ND		ug/l	1.0	--
Chlorobenzene	ND		ug/l	1.0	--
Trichlorofluoromethane	ND		ug/l	2.0	--
1,2-Dichloroethane	ND		ug/l	1.0	--
1,1,1-Trichloroethane	ND		ug/l	1.0	--
Bromodichloromethane	ND		ug/l	1.0	--
trans-1,3-Dichloropropene	ND		ug/l	0.50	--
cis-1,3-Dichloropropene	ND		ug/l	0.50	--
1,1-Dichloropropene	ND		ug/l	2.0	--
Bromoform	ND		ug/l	2.0	--
1,1,2,2-Tetrachloroethane	ND		ug/l	1.0	--
Benzene	ND		ug/l	1.0	--
Toluene	ND		ug/l	1.0	--
Ethylbenzene	ND		ug/l	1.0	--
Chloromethane	ND		ug/l	2.0	--
Bromomethane	ND		ug/l	2.0	--
Vinyl chloride	ND		ug/l	1.0	--
Chloroethane	ND		ug/l	2.0	--
1,1-Dichloroethene	ND		ug/l	1.0	--
trans-1,2-Dichloroethene	ND		ug/l	1.0	--
Trichloroethene	ND		ug/l	1.0	--
1,2-Dichlorobenzene	ND		ug/l	1.0	--
1,3-Dichlorobenzene	ND		ug/l	1.0	--
1,4-Dichlorobenzene	ND		ug/l	1.0	--

Project Name: CITY OF NEW BEDFORD **Lab Number:** L1014045

Project Number: 115058 **Report Date:** 09/17/10

Method Blank Analysis
Batch Quality Control

Analytical Method: 97,8260B
Analytical Date: 09/13/10 09:48
Analyst: MM

Parameter	Result	Qualifier	Units	RL	MDL
MCP Volatile Organics - Westborough Lab for sample(s): 04,07 Batch: WG432285-3					
Methyl tert butyl ether	ND		ug/l	2.0	--
p/m-Xylene	ND		ug/l	2.0	--
o-Xylene	ND		ug/l	1.0	--
cis-1,2-Dichloroethene	ND		ug/l	1.0	--
Dibromomethane	ND		ug/l	2.0	--
1,2,3-Trichloropropane	ND		ug/l	2.0	--
Styrene	ND		ug/l	1.0	--
Dichlorodifluoromethane	ND		ug/l	2.0	--
Acetone	ND		ug/l	5.0	--
Carbon disulfide	ND		ug/l	2.0	--
2-Butanone	ND		ug/l	5.0	--
4-Methyl-2-pentanone	ND		ug/l	5.0	--
2-Hexanone	ND		ug/l	5.0	--
Bromochloromethane	ND		ug/l	2.0	--
Tetrahydrofuran	ND		ug/l	10	--
2,2-Dichloropropane	ND		ug/l	2.0	--
1,2-Dibromoethane	ND		ug/l	2.0	--
1,3-Dichloropropane	ND		ug/l	2.0	--
1,1,1,2-Tetrachloroethane	ND		ug/l	1.0	--
Bromobenzene	ND		ug/l	2.0	--
n-Butylbenzene	ND		ug/l	2.0	--
sec-Butylbenzene	ND		ug/l	2.0	--
tert-Butylbenzene	ND		ug/l	2.0	--
o-Chlorotoluene	ND		ug/l	2.0	--
p-Chlorotoluene	ND		ug/l	2.0	--
1,2-Dibromo-3-chloropropane	ND		ug/l	2.0	--
Hexachlorobutadiene	ND		ug/l	0.60	--
Isopropylbenzene	ND		ug/l	2.0	--
p-Isopropyltoluene	ND		ug/l	2.0	--
Naphthalene	ND		ug/l	5.0	--
n-Propylbenzene	ND		ug/l	2.0	--

Project Name: CITY OF NEW BEDFORD **Lab Number:** L1014045

Project Number: 115058 **Report Date:** 09/17/10

Method Blank Analysis
Batch Quality Control

Analytical Method: 97,8260B
Analytical Date: 09/13/10 09:48
Analyst: MM

Parameter	Result	Qualifier	Units	RL	MDL
MCP Volatile Organics - Westborough Lab for sample(s): 04,07 Batch: WG432285-3					
1,2,3-Trichlorobenzene	ND		ug/l	2.0	--
1,2,4-Trichlorobenzene	ND		ug/l	2.0	--
1,3,5-Trimethylbenzene	ND		ug/l	2.0	--
1,2,4-Trimethylbenzene	ND		ug/l	2.0	--
Ethyl ether	ND		ug/l	2.0	--
Isopropyl Ether	ND		ug/l	2.0	--
Ethyl-Tert-Butyl-Ether	ND		ug/l	2.0	--
Tertiary-Amyl Methyl Ether	ND		ug/l	2.0	--
1,4-Dioxane	ND		ug/l	250	--

Surrogate	%Recovery	Qualifier	Acceptance Criteria
1,2-Dichloroethane-d4	89		70-130
Toluene-d8	99		70-130
4-Bromofluorobenzene	116		70-130
Dibromofluoromethane	103		70-130

Project Name: CITY OF NEW BEDFORD **Lab Number:** L1014045

Project Number: 115058 **Report Date:** 09/17/10

Method Blank Analysis
Batch Quality Control

Analytical Method: 97,8260B
Analytical Date: 09/14/10 09:43
Analyst: MM

Parameter	Result	Qualifier	Units	RL	MDL
MCP Volatile Organics - Westborough Lab for sample(s): 01-02 Batch: WG432430-3					
Methylene chloride	ND		ug/l	2.0	--
1,1-Dichloroethane	ND		ug/l	1.0	--
Chloroform	ND		ug/l	1.0	--
Carbon tetrachloride	ND		ug/l	1.0	--
1,2-Dichloropropane	ND		ug/l	1.0	--
Dibromochloromethane	ND		ug/l	1.0	--
1,1,2-Trichloroethane	ND		ug/l	1.0	--
Tetrachloroethene	ND		ug/l	1.0	--
Chlorobenzene	ND		ug/l	1.0	--
Trichlorofluoromethane	ND		ug/l	2.0	--
1,2-Dichloroethane	ND		ug/l	1.0	--
1,1,1-Trichloroethane	ND		ug/l	1.0	--
Bromodichloromethane	ND		ug/l	1.0	--
trans-1,3-Dichloropropene	ND		ug/l	0.50	--
cis-1,3-Dichloropropene	ND		ug/l	0.50	--
1,1-Dichloropropene	ND		ug/l	2.0	--
Bromoform	ND		ug/l	2.0	--
1,1,2,2-Tetrachloroethane	ND		ug/l	1.0	--
Benzene	ND		ug/l	1.0	--
Toluene	ND		ug/l	1.0	--
Ethylbenzene	ND		ug/l	1.0	--
Chloromethane	ND		ug/l	2.0	--
Bromomethane	ND		ug/l	2.0	--
Vinyl chloride	ND		ug/l	1.0	--
Chloroethane	ND		ug/l	2.0	--
1,1-Dichloroethene	ND		ug/l	1.0	--
trans-1,2-Dichloroethene	ND		ug/l	1.0	--
Trichloroethene	ND		ug/l	1.0	--
1,2-Dichlorobenzene	ND		ug/l	1.0	--
1,3-Dichlorobenzene	ND		ug/l	1.0	--
1,4-Dichlorobenzene	ND		ug/l	1.0	--

Project Name: CITY OF NEW BEDFORD **Lab Number:** L1014045

Project Number: 115058 **Report Date:** 09/17/10

Method Blank Analysis
Batch Quality Control

Analytical Method: 97,8260B
Analytical Date: 09/14/10 09:43
Analyst: MM

Parameter	Result	Qualifier	Units	RL	MDL
MCP Volatile Organics - Westborough Lab for sample(s): 01-02 Batch: WG432430-3					
Methyl tert butyl ether	ND		ug/l	2.0	--
p/m-Xylene	ND		ug/l	2.0	--
o-Xylene	ND		ug/l	1.0	--
cis-1,2-Dichloroethene	ND		ug/l	1.0	--
Dibromomethane	ND		ug/l	2.0	--
1,2,3-Trichloropropane	ND		ug/l	2.0	--
Styrene	ND		ug/l	1.0	--
Dichlorodifluoromethane	ND		ug/l	2.0	--
Acetone	ND		ug/l	5.0	--
Carbon disulfide	ND		ug/l	2.0	--
2-Butanone	ND		ug/l	5.0	--
4-Methyl-2-pentanone	ND		ug/l	5.0	--
2-Hexanone	ND		ug/l	5.0	--
Bromochloromethane	ND		ug/l	2.0	--
Tetrahydrofuran	ND		ug/l	10	--
2,2-Dichloropropane	ND		ug/l	2.0	--
1,2-Dibromoethane	ND		ug/l	2.0	--
1,3-Dichloropropane	ND		ug/l	2.0	--
1,1,1,2-Tetrachloroethane	ND		ug/l	1.0	--
Bromobenzene	ND		ug/l	2.0	--
n-Butylbenzene	ND		ug/l	2.0	--
sec-Butylbenzene	ND		ug/l	2.0	--
tert-Butylbenzene	ND		ug/l	2.0	--
o-Chlorotoluene	ND		ug/l	2.0	--
p-Chlorotoluene	ND		ug/l	2.0	--
1,2-Dibromo-3-chloropropane	ND		ug/l	2.0	--
Hexachlorobutadiene	ND		ug/l	0.60	--
Isopropylbenzene	ND		ug/l	2.0	--
p-Isopropyltoluene	ND		ug/l	2.0	--
Naphthalene	ND		ug/l	5.0	--
n-Propylbenzene	ND		ug/l	2.0	--

Project Name: CITY OF NEW BEDFORD **Lab Number:** L1014045

Project Number: 115058 **Report Date:** 09/17/10

Method Blank Analysis
Batch Quality Control

Analytical Method: 97,8260B
Analytical Date: 09/14/10 09:43
Analyst: MM

Parameter	Result	Qualifier	Units	RL	MDL
MCP Volatile Organics - Westborough Lab for sample(s): 01-02 Batch: WG432430-3					
1,2,3-Trichlorobenzene	ND		ug/l	2.0	--
1,2,4-Trichlorobenzene	ND		ug/l	2.0	--
1,3,5-Trimethylbenzene	ND		ug/l	2.0	--
1,2,4-Trimethylbenzene	ND		ug/l	2.0	--
Ethyl ether	ND		ug/l	2.0	--
Isopropyl Ether	ND		ug/l	2.0	--
Ethyl-Tert-Butyl-Ether	ND		ug/l	2.0	--
Tertiary-Amyl Methyl Ether	ND		ug/l	2.0	--
1,4-Dioxane	ND		ug/l	250	--

Surrogate	%Recovery	Qualifier	Acceptance Criteria
1,2-Dichloroethane-d4	88		70-130
Toluene-d8	98		70-130
4-Bromofluorobenzene	112		70-130
Dibromofluoromethane	108		70-130

Project Name: CITY OF NEW BEDFORD **Lab Number:** L1014045

Project Number: 115058 **Report Date:** 09/17/10

Method Blank Analysis
Batch Quality Control

Analytical Method: 97,8260B
Analytical Date: 09/15/10 09:59
Analyst: MM

Parameter	Result	Qualifier	Units	RL	MDL
MCP Volatile Organics - Westborough Lab for sample(s): 03,05,08 Batch: WG432490-3					
Methylene chloride	ND		ug/l	2.0	--
1,1-Dichloroethane	ND		ug/l	1.0	--
Chloroform	ND		ug/l	1.0	--
Carbon tetrachloride	ND		ug/l	1.0	--
1,2-Dichloropropane	ND		ug/l	1.0	--
Dibromochloromethane	ND		ug/l	1.0	--
1,1,2-Trichloroethane	ND		ug/l	1.0	--
Tetrachloroethene	ND		ug/l	1.0	--
Chlorobenzene	ND		ug/l	1.0	--
Trichlorofluoromethane	ND		ug/l	2.0	--
1,2-Dichloroethane	ND		ug/l	1.0	--
1,1,1-Trichloroethane	ND		ug/l	1.0	--
Bromodichloromethane	ND		ug/l	1.0	--
trans-1,3-Dichloropropene	ND		ug/l	0.50	--
cis-1,3-Dichloropropene	ND		ug/l	0.50	--
1,1-Dichloropropene	ND		ug/l	2.0	--
Bromoform	ND		ug/l	2.0	--
1,1,2,2-Tetrachloroethane	ND		ug/l	1.0	--
Benzene	ND		ug/l	1.0	--
Toluene	ND		ug/l	1.0	--
Ethylbenzene	ND		ug/l	1.0	--
Chloromethane	ND		ug/l	2.0	--
Bromomethane	ND		ug/l	2.0	--
Vinyl chloride	ND		ug/l	1.0	--
Chloroethane	ND		ug/l	2.0	--
1,1-Dichloroethene	ND		ug/l	1.0	--
trans-1,2-Dichloroethene	ND		ug/l	1.0	--
Trichloroethene	ND		ug/l	1.0	--
1,2-Dichlorobenzene	ND		ug/l	1.0	--
1,3-Dichlorobenzene	ND		ug/l	1.0	--
1,4-Dichlorobenzene	ND		ug/l	1.0	--

Project Name: CITY OF NEW BEDFORD **Lab Number:** L1014045

Project Number: 115058 **Report Date:** 09/17/10

Method Blank Analysis
Batch Quality Control

Analytical Method: 97,8260B
Analytical Date: 09/15/10 09:59
Analyst: MM

Parameter	Result	Qualifier	Units	RL	MDL
MCP Volatile Organics - Westborough Lab for sample(s): 03,05,08 Batch: WG432490-3					
Methyl tert butyl ether	ND		ug/l	2.0	--
p/m-Xylene	ND		ug/l	2.0	--
o-Xylene	ND		ug/l	1.0	--
cis-1,2-Dichloroethene	ND		ug/l	1.0	--
Dibromomethane	ND		ug/l	2.0	--
1,2,3-Trichloropropane	ND		ug/l	2.0	--
Styrene	ND		ug/l	1.0	--
Dichlorodifluoromethane	ND		ug/l	2.0	--
Acetone	ND		ug/l	5.0	--
Carbon disulfide	ND		ug/l	2.0	--
2-Butanone	ND		ug/l	5.0	--
4-Methyl-2-pentanone	ND		ug/l	5.0	--
2-Hexanone	ND		ug/l	5.0	--
Bromochloromethane	ND		ug/l	2.0	--
Tetrahydrofuran	ND		ug/l	10	--
2,2-Dichloropropane	ND		ug/l	2.0	--
1,2-Dibromoethane	ND		ug/l	2.0	--
1,3-Dichloropropane	ND		ug/l	2.0	--
1,1,1,2-Tetrachloroethane	ND		ug/l	1.0	--
Bromobenzene	ND		ug/l	2.0	--
n-Butylbenzene	ND		ug/l	2.0	--
sec-Butylbenzene	ND		ug/l	2.0	--
tert-Butylbenzene	ND		ug/l	2.0	--
o-Chlorotoluene	ND		ug/l	2.0	--
p-Chlorotoluene	ND		ug/l	2.0	--
1,2-Dibromo-3-chloropropane	ND		ug/l	2.0	--
Hexachlorobutadiene	ND		ug/l	0.60	--
Isopropylbenzene	ND		ug/l	2.0	--
p-Isopropyltoluene	ND		ug/l	2.0	--
Naphthalene	ND		ug/l	5.0	--
n-Propylbenzene	ND		ug/l	2.0	--

Project Name: CITY OF NEW BEDFORD **Lab Number:** L1014045

Project Number: 115058 **Report Date:** 09/17/10

Method Blank Analysis
Batch Quality Control

Analytical Method: 97,8260B
Analytical Date: 09/15/10 09:59
Analyst: MM

Parameter	Result	Qualifier	Units	RL	MDL
MCP Volatile Organics - Westborough Lab for sample(s): 03,05,08 Batch: WG432490-3					
1,2,3-Trichlorobenzene	ND		ug/l	2.0	--
1,2,4-Trichlorobenzene	ND		ug/l	2.0	--
1,3,5-Trimethylbenzene	ND		ug/l	2.0	--
1,2,4-Trimethylbenzene	ND		ug/l	2.0	--
Ethyl ether	ND		ug/l	2.0	--
Isopropyl Ether	ND		ug/l	2.0	--
Ethyl-Tert-Butyl-Ether	ND		ug/l	2.0	--
Tertiary-Amyl Methyl Ether	ND		ug/l	2.0	--
1,4-Dioxane	ND		ug/l	250	--

Surrogate	%Recovery	Qualifier	Acceptance Criteria
1,2-Dichloroethane-d4	95		70-130
Toluene-d8	100		70-130
4-Bromofluorobenzene	112		70-130
Dibromofluoromethane	107		70-130

Lab Control Sample Analysis
Batch Quality Control

Project Name: CITY OF NEW BEDFORD
Project Number: 115058
Lab Number: L1014045
Report Date: 09/17/10

Parameter	LCS %Recovery	Qual	LCSD %Recovery	Qual	%Recovery Limits	RPD	Qual	RPD Limits
MCP Volatile Organics - Westborough Lab Associated sample(s): 06,09 Batch: WG432277-1 WG432277-2								
Methylene chloride	99		99		70-130	0		20
1,1-Dichloroethane	98		96		70-130	2		20
Chloroform	95		95		70-130	0		20
Carbon tetrachloride	111		112		70-130	1		20
1,2-Dichloropropane	94		94		70-130	0		20
Dibromochloromethane	104		96		70-130	8		20
1,1,2-Trichloroethane	94		86		70-130	9		20
Tetrachloroethene	94		92		70-130	2		20
Chlorobenzene	90		86		70-130	5		20
Trichlorofluoromethane	87		87		70-130	0		20
1,2-Dichloroethane	94		94		70-130	0		20
1,1,1-Trichloroethane	98		95		70-130	3		20
Bromodichloromethane	106		100		70-130	6		20
trans-1,3-Dichloropropene	99		94		70-130	5		20
cis-1,3-Dichloropropene	85		83		70-130	2		20
1,1-Dichloropropene	95		95		70-130	0		20
Bromoform	111		100		70-130	10		20
1,1,2,2-Tetrachloroethane	100		92		70-130	8		20
Benzene	95		93		70-130	2		20
Toluene	92		88		70-130	4		20
Ethylbenzene	96		91		70-130	5		20

Lab Control Sample Analysis
Batch Quality Control

Project Name: CITY OF NEW BEDFORD
Project Number: 115058
Lab Number: L1014045
Report Date: 09/17/10

Parameter	LCS %Recovery	Qual	LCSD %Recovery	Qual	%Recovery Limits	RPD	Qual	RPD Limits
MCP Volatile Organics - Westborough Lab Associated sample(s): 06,09 Batch: WG432277-1 WG432277-2								
Chloromethane	90		91		70-130	1		20
Bromomethane	84		87		70-130	4		20
Vinyl chloride	83		81		70-130	2		20
Chloroethane	**68**	Q	73		70-130	7		20
1,1-Dichloroethene	83		82		70-130	1		20
trans-1,2-Dichloroethene	95		94		70-130	1		20
Trichloroethene	91		93		70-130	2		20
1,2-Dichlorobenzene	90		90		70-130	0		20
1,3-Dichlorobenzene	90		89		70-130	1		20
1,4-Dichlorobenzene	91		89		70-130	2		20
Methyl tert butyl ether	87		78		70-130	11		20
p/m-Xylene	92		89		70-130	3		20
o-Xylene	90		88		70-130	2		20
cis-1,2-Dichloroethene	100		95		70-130	5		20
Dibromomethane	89		93		70-130	4		20
1,2,3-Trichloropropane	100		93		70-130	7		20
Styrene	93		89		70-130	4		20
Dichlorodifluoromethane	81		81		70-130	0		20
Acetone	104		96		70-130	8		20
Carbon disulfide	**68**	Q	71		70-130	4		20
2-Butanone	109		87		70-130	**22**	Q	20

Lab Control Sample Analysis
Batch Quality Control

Project Name: CITY OF NEW BEDFORD
Project Number: 115058
Lab Number: L1014045
Report Date: 09/17/10

Parameter	LCS %Recovery	Qual	LCSD %Recovery	Qual	%Recovery Limits	RPD	Qual	RPD Limits
MCP Volatile Organics - Westborough Lab Associated sample(s): 06,09 Batch: WG432277-1 WG432277-2								
4-Methyl-2-pentanone	103		92		70-130	11		20
2-Hexanone	109		92		70-130	17		20
Bromochloromethane	93		91		70-130	2		20
Tetrahydrofuran	108		95		70-130	13		20
2,2-Dichloropropane	99		100		70-130	1		20
1,2-Dibromoethane	96		88		70-130	9		20
1,3-Dichloropropane	95		87		70-130	9		20
1,1,1,2-Tetrachloroethane	103		101		70-130	2		20
Bromobenzene	90		91		70-130	1		20
n-Butylbenzene	93		92		70-130	1		20
sec-Butylbenzene	93		90		70-130	3		20
tert-Butylbenzene	91		90		70-130	1		20
o-Chlorotoluene	89		89		70-130	0		20
p-Chlorotoluene	89		88		70-130	1		20
1,2-Dibromo-3-chloropropane	107		96		70-130	11		20
Hexachlorobutadiene	88		88		70-130	0		20
Isopropylbenzene	98		92		70-130	6		20
p-Isopropyltoluene	94		92		70-130	2		20
Naphthalene	92		86		70-130	7		20
n-Propylbenzene	94		90		70-130	4		20
1,2,3-Trichlorobenzene	91		88		70-130	3		20

Lab Control Sample Analysis
Batch Quality Control

Project Name: CITY OF NEW BEDFORD
Project Number: 115058
Lab Number: L1014045
Report Date: 09/17/10

Parameter	LCS %Recovery	Qual	LCSD %Recovery	Qual	%Recovery Limits	RPD	Qual	RPD Limits
MCP Volatile Organics - Westborough Lab Associated sample(s): 06,09 Batch: WG432277-1 WG432277-2								
1,2,4-Trichlorobenzene	88		85		70-130	3		20
1,3,5-Trimethylbenzene	93		90		70-130	3		20
1,2,4-Trimethylbenzene	91		89		70-130	2		20
Ethyl ether	80		76		70-130	5		20
Isopropyl Ether	88		85		70-130	3		20
Ethyl-Tert-Butyl-Ether	85		79		70-130	7		20
Tertiary-Amyl Methyl Ether	89		84		70-130	6		20
1,4-Dioxane	108		95		70-130	13		20

Surrogate	LCS %Recovery	Qual	LCSD %Recovery	Qual	Acceptance Criteria
1,2-Dichloroethane-d4	98		96		70-130
Toluene-d8	100		99		70-130
4-Bromofluorobenzene	99		103		70-130
Dibromofluoromethane	97		102		70-130

Lab Control Sample Analysis
Batch Quality Control

Project Name: CITY OF NEW BEDFORD
Project Number: 115058

Lab Number: L1014045
Report Date: 09/17/10

Parameter	LCS %Recovery	Qual	LCSD %Recovery	Qual	%Recovery Limits	RPD	Qual	RPD Limits
MCP Volatile Organics - Westborough Lab Associated sample(s): 04,07 Batch: WG432285-1 WG432285-2								
Methylene chloride	102		89		70-130	14		20
1,1-Dichloroethane	108		88		70-130	20		20
Chloroform	101		86		70-130	16		20
Carbon tetrachloride	112		94		70-130	17		20
1,2-Dichloropropane	100		91		70-130	9		20
Dibromochloromethane	99		93		70-130	6		20
1,1,2-Trichloroethane	93		89		70-130	4		20
Tetrachloroethene	102		81		70-130	**23**	Q	20
Chlorobenzene	97		84		70-130	14		20
Trichlorofluoromethane	94		82		70-130	14		20
1,2-Dichloroethane	93		86		70-130	8		20
1,1,1-Trichloroethane	107		86		70-130	**22**	Q	20
Bromodichloromethane	105		94		70-130	11		20
trans-1,3-Dichloropropene	97		90		70-130	7		20
cis-1,3-Dichloropropene	87		80		70-130	8		20
1,1-Dichloropropene	104		85		70-130	20		20
Bromoform	107		99		70-130	8		20
1,1,2,2-Tetrachloroethane	96		89		70-130	8		20
Benzene	102		86		70-130	17		20
Toluene	100		83		70-130	19		20
Ethylbenzene	106		87		70-130	20		20

Lab Control Sample Analysis
Batch Quality Control

Project Name: CITY OF NEW BEDFORD
Project Number: 115058
Lab Number: L1014045
Report Date: 09/17/10

Parameter	LCS %Recovery	Qual	LCSD %Recovery	Qual	%Recovery Limits	RPD	Qual	RPD Limits
MCP Volatile Organics - Westborough Lab Associated sample(s): 04,07 Batch: WG432285-1 WG432285-2								
Chloromethane	107		83		70-130	**25**	Q	20
Bromomethane	93		70		70-130	**28**	Q	20
Vinyl chloride	87		73		70-130	18		20
Chloroethane	75		**63**	Q	70-130	17		20
1,1-Dichloroethene	89		73		70-130	20		20
trans-1,2-Dichloroethene	101		82		70-130	**21**	Q	20
Trichloroethene	102		83		70-130	**21**	Q	20
1,2-Dichlorobenzene	97		85		70-130	13		20
1,3-Dichlorobenzene	101		84		70-130	18		20
1,4-Dichlorobenzene	101		84		70-130	18		20
Methyl tert butyl ether	78		79		70-130	1		20
p/m-Xylene	102		84		70-130	19		20
o-Xylene	98		84		70-130	15		20
cis-1,2-Dichloroethene	104		89		70-130	16		20
Dibromomethane	85		82		70-130	4		20
1,2,3-Trichloropropane	90		85		70-130	6		20
Styrene	97		85		70-130	13		20
Dichlorodifluoromethane	86		74		70-130	15		20
Acetone	95		102		70-130	7		20
Carbon disulfide	76		**61**	Q	70-130	**22**	Q	20
2-Butanone	88		91		70-130	3		20

Lab Control Sample Analysis
Batch Quality Control

Project Name: CITY OF NEW BEDFORD
Project Number: 115058
Lab Number: L1014045
Report Date: 09/17/10

Parameter	LCS %Recovery	Qual	LCSD %Recovery	Qual	%Recovery Limits	RPD	Qual	RPD Limits
MCP Volatile Organics - Westborough Lab Associated sample(s): 04,07 Batch: WG432285-1 WG432285-2								
4-Methyl-2-pentanone	85		90		70-130	6		20
2-Hexanone	87		90		70-130	3		20
Bromochloromethane	94		89		70-130	5		20
Tetrahydrofuran	87		89		70-130	2		20
2,2-Dichloropropane	110		89		70-130	**21**	Q	20
1,2-Dibromoethane	92		90		70-130	2		20
1,3-Dichloropropane	94		88		70-130	7		20
1,1,1,2-Tetrachloroethane	118		103		70-130	14		20
Bromobenzene	101		85		70-130	17		20
n-Butylbenzene	112		83		70-130	**30**	Q	20
sec-Butylbenzene	110		78		70-130	**34**	Q	20
tert-Butylbenzene	107		79		70-130	**30**	Q	20
o-Chlorotoluene	104		84		70-130	**21**	Q	20
p-Chlorotoluene	105		86		70-130	20		20
1,2-Dibromo-3-chloropropane	88		87		70-130	1		20
Hexachlorobutadiene	110		82		70-130	**29**	Q	20
Isopropylbenzene	106		82		70-130	**26**	Q	20
p-Isopropyltoluene	109		81		70-130	**29**	Q	20
Naphthalene	76		75		70-130	1		20
n-Propylbenzene	109		82		70-130	**28**	Q	20
1,2,3-Trichlorobenzene	84		81		70-130	4		20

Lab Control Sample Analysis
Batch Quality Control

Project Name: CITY OF NEW BEDFORD
Project Number: 115058
Lab Number: L1014045
Report Date: 09/17/10

Parameter	LCS %Recovery	Qual	LCSD %Recovery	Qual	%Recovery Limits	RPD	Qual	RPD Limits
MCP Volatile Organics - Westborough Lab Associated sample(s): 04,07 Batch: WG432285-1 WG432285-2								
1,2,4-Trichlorobenzene	88		80		70-130	10		20
1,3,5-Trimethylbenzene	105		82		70-130	**25**	Q	20
1,2,4-Trimethylbenzene	104		83		70-130	**22**	Q	20
Ethyl ether	74		73		70-130	1		20
Isopropyl Ether	91		84		70-130	8		20
Ethyl-Tert-Butyl-Ether	85		82		70-130	4		20
Tertiary-Amyl Methyl Ether	84		82		70-130	2		20
1,4-Dioxane	99		94		70-130	5		20

Surrogate	LCS %Recovery	Qual	LCSD %Recovery	Qual	Acceptance Criteria
1,2-Dichloroethane-d4	90		90		70-130
Toluene-d8	102		102		70-130
4-Bromofluorobenzene	104		101		70-130
Dibromofluoromethane	94		97		70-130

Lab Control Sample Analysis
Batch Quality Control

Project Name: CITY OF NEW BEDFORD
Project Number: 115058

Lab Number: L1014045
Report Date: 09/17/10

Parameter	LCS %Recovery	Qual	LCSD %Recovery	Qual	%Recovery Limits	RPD	Qual	RPD Limits
MCP Volatile Organics - Westborough Lab Associated sample(s): 01-02 Batch: WG432430-1 WG432430-2								
Methylene chloride	103		99		70-130	4		20
1,1-Dichloroethane	101		95		70-130	6		20
Chloroform	100		94		70-130	6		20
Carbon tetrachloride	110		101		70-130	9		20
1,2-Dichloropropane	98		92		70-130	6		20
Dibromochloromethane	98		93		70-130	5		20
1,1,2-Trichloroethane	96		89		70-130	8		20
Tetrachloroethene	97		89		70-130	9		20
Chlorobenzene	93		90		70-130	3		20
Trichlorofluoromethane	97		88		70-130	10		20
1,2-Dichloroethane	96		90		70-130	6		20
1,1,1-Trichloroethane	102		93		70-130	9		20
Bromodichloromethane	104		97		70-130	7		20
trans-1,3-Dichloropropene	89		90		70-130	1		20
cis-1,3-Dichloropropene	85		81		70-130	5		20
1,1-Dichloropropene	103		94		70-130	9		20
Bromoform	104		101		70-130	3		20
1,1,2,2-Tetrachloroethane	99		92		70-130	7		20
Benzene	101		95		70-130	6		20
Toluene	96		90		70-130	6		20
Ethylbenzene	99		94		70-130	5		20

Lab Control Sample Analysis
Batch Quality Control

Project Name: CITY OF NEW BEDFORD
Project Number: 115058

Lab Number: L1014045
Report Date: 09/17/10

Parameter	LCS %Recovery	Qual	LCSD %Recovery	Qual	%Recovery Limits	RPD	Qual	RPD Limits
MCP Volatile Organics - Westborough Lab Associated sample(s): 01-02 Batch: WG432430-1 WG432430-2								
Chloromethane	98		93		70-130	5		20
Bromomethane	78		75		70-130	4		20
Vinyl chloride	89		82		70-130	8		20
Chloroethane	76		72		70-130	5		20
1,1-Dichloroethene	91		85		70-130	7		20
trans-1,2-Dichloroethene	99		92		70-130	7		20
Trichloroethene	97		90		70-130	7		20
1,2-Dichlorobenzene	96		90		70-130	6		20
1,3-Dichlorobenzene	94		89		70-130	5		20
1,4-Dichlorobenzene	96		90		70-130	6		20
Methyl tert butyl ether	84		81		70-130	4		20
p/m-Xylene	96		91		70-130	5		20
o-Xylene	96		91		70-130	5		20
cis-1,2-Dichloroethene	104		99		70-130	5		20
Dibromomethane	92		89		70-130	3		20
1,2,3-Trichloropropane	92		86		70-130	7		20
Styrene	96		91		70-130	5		20
Dichlorodifluoromethane	87		84		70-130	4		20
Acetone	106		111		70-130	5		20
Carbon disulfide	74		70		70-130	6		20
2-Butanone	104		100		70-130	4		20

Lab Control Sample Analysis
Batch Quality Control

Project Name: CITY OF NEW BEDFORD
Project Number: 115058
Lab Number: L1014045
Report Date: 09/17/10

Parameter	LCS %Recovery	Qual	LCSD %Recovery	Qual	%Recovery Limits	RPD	Qual	RPD Limits
MCP Volatile Organics - Westborough Lab Associated sample(s): 01-02 Batch: WG432430-1 WG432430-2								
4-Methyl-2-pentanone	101		99		70-130	2		20
2-Hexanone	97		96		70-130	1		20
Bromochloromethane	100		94		70-130	6		20
Tetrahydrofuran	92		96		70-130	4		20
2,2-Dichloropropane	102		91		70-130	11		20
1,2-Dibromoethane	96		92		70-130	4		20
1,3-Dichloropropane	96		94		70-130	2		20
1,1,1,2-Tetrachloroethane	114		108		70-130	5		20
Bromobenzene	95		88		70-130	8		20
n-Butylbenzene	100		90		70-130	11		20
sec-Butylbenzene	98		91		70-130	7		20
tert-Butylbenzene	95		89		70-130	7		20
o-Chlorotoluene	96		88		70-130	9		20
p-Chlorotoluene	98		90		70-130	9		20
1,2-Dibromo-3-chloropropane	96		84		70-130	13		20
Hexachlorobutadiene	98		92		70-130	6		20
Isopropylbenzene	100		94		70-130	6		20
p-Isopropyltoluene	97		91		70-130	6		20
Naphthalene	82		79		70-130	4		20
n-Propylbenzene	98		91		70-130	7		20
1,2,3-Trichlorobenzene	86		82		70-130	5		20

Lab Control Sample Analysis
Batch Quality Control

Project Name: CITY OF NEW BEDFORD
Project Number: 115058
Lab Number: L1014045
Report Date: 09/17/10

Parameter	LCS %Recovery	Qual	LCSD %Recovery	Qual	%Recovery Limits	RPD	Qual	RPD Limits
MCP Volatile Organics - Westborough Lab Associated sample(s): 01-02 Batch: WG432430-1 WG432430-2								
1,2,4-Trichlorobenzene	88		81		70-130	8		20
1,3,5-Trimethylbenzene	95		89		70-130	7		20
1,2,4-Trimethylbenzene	96		90		70-130	6		20
Ethyl ether	85		78		70-130	9		20
Isopropyl Ether	91		87		70-130	4		20
Ethyl-Tert-Butyl-Ether	88		83		70-130	6		20
Tertiary-Amyl Methyl Ether	90		86		70-130	5		20
1,4-Dioxane	99		91		70-130	8		20

Surrogate	LCS %Recovery	Qual	LCSD %Recovery	Qual	Acceptance Criteria
1,2-Dichloroethane-d4	91		86		70-130
Toluene-d8	100		98		70-130
4-Bromofluorobenzene	97		97		70-130
Dibromofluoromethane	94		94		70-130

Lab Control Sample Analysis
Batch Quality Control

Project Name: CITY OF NEW BEDFORD
Project Number: 115058
Lab Number: L1014045
Report Date: 09/17/10

Parameter	LCS %Recovery	Qual	LCSD %Recovery	Qual	%Recovery Limits	RPD	Qual	RPD Limits
MCP Volatile Organics - Westborough Lab Associated sample(s): 03,05,08 Batch: WG432490-1 WG432490-2								
Methylene chloride	102		104		70-130	2		20
1,1-Dichloroethane	96		94		70-130	2		20
Chloroform	94		96		70-130	2		20
Carbon tetrachloride	104		108		70-130	4		20
1,2-Dichloropropane	96		93		70-130	3		20
Dibromochloromethane	98		99		70-130	1		20
1,1,2-Trichloroethane	90		91		70-130	1		20
Tetrachloroethene	89		91		70-130	2		20
Chlorobenzene	87		91		70-130	4		20
Trichlorofluoromethane	94		96		70-130	2		20
1,2-Dichloroethane	91		91		70-130	0		20
1,1,1-Trichloroethane	94		97		70-130	3		20
Bromodichloromethane	98		99		70-130	1		20
trans-1,3-Dichloropropene	89		90		70-130	1		20
cis-1,3-Dichloropropene	81		82		70-130	1		20
1,1-Dichloropropene	94		96		70-130	2		20
Bromoform	101		100		70-130	1		20
1,1,2,2-Tetrachloroethane	91		91		70-130	0		20
Benzene	94		95		70-130	1		20
Toluene	89		92		70-130	3		20
Ethylbenzene	94		96		70-130	2		20

Lab Control Sample Analysis
Batch Quality Control

Project Name: CITY OF NEW BEDFORD
Project Number: 115058
Lab Number: L1014045
Report Date: 09/17/10

Parameter	LCS %Recovery	Qual	LCSD %Recovery	Qual	%Recovery Limits	RPD	Qual	RPD Limits
MCP Volatile Organics - Westborough Lab Associated sample(s): 03,05,08 Batch: WG432490-1 WG432490-2								
Chloromethane	93		90		70-130	3		20
Bromomethane	87		90		70-130	3		20
Vinyl chloride	87		88		70-130	1		20
Chloroethane	74		74		70-130	0		20
1,1-Dichloroethene	87		88		70-130	1		20
trans-1,2-Dichloroethene	93		95		70-130	2		20
Trichloroethene	89		90		70-130	1		20
1,2-Dichlorobenzene	89		87		70-130	2		20
1,3-Dichlorobenzene	90		87		70-130	3		20
1,4-Dichlorobenzene	90		87		70-130	3		20
Methyl tert butyl ether	89		88		70-130	1		20
p/m-Xylene	90		94		70-130	4		20
o-Xylene	96		99		70-130	3		20
cis-1,2-Dichloroethene	99		99		70-130	0		20
Dibromomethane	99		88		70-130	12		20
1,2,3-Trichloropropane	87		88		70-130	1		20
Styrene	96		100		70-130	4		20
Dichlorodifluoromethane	86		88		70-130	2		20
Acetone	97		102		70-130	5		20
Carbon disulfide	**68**	Q	72		70-130	6		20
2-Butanone	106		95		70-130	11		20

Lab Control Sample Analysis
Batch Quality Control

Project Name: CITY OF NEW BEDFORD
Project Number: 115058
Lab Number: L1014045
Report Date: 09/17/10

Parameter	LCS %Recovery	Qual	LCSD %Recovery	Qual	%Recovery Limits	RPD	Qual	RPD Limits
MCP Volatile Organics - Westborough Lab Associated sample(s): 03,05,08 Batch: WG432490-1 WG432490-2								
4-Methyl-2-pentanone	95		95		70-130	0		20
2-Hexanone	90		92		70-130	2		20
Bromochloromethane	96		96		70-130	0		20
Tetrahydrofuran	95		99		70-130	4		20
2,2-Dichloropropane	95		94		70-130	1		20
1,2-Dibromoethane	90		92		70-130	2		20
1,3-Dichloropropane	91		94		70-130	3		20
1,1,1,2-Tetrachloroethane	114		114		70-130	0		20
Bromobenzene	90		89		70-130	1		20
n-Butylbenzene	86		84		70-130	2		20
sec-Butylbenzene	85		84		70-130	1		20
tert-Butylbenzene	86		83		70-130	4		20
o-Chlorotoluene	87		88		70-130	1		20
p-Chlorotoluene	89		88		70-130	1		20
1,2-Dibromo-3-chloropropane	93		85		70-130	9		20
Hexachlorobutadiene	86		88		70-130	2		20
Isopropylbenzene	90		93		70-130	3		20
p-Isopropyltoluene	87		86		70-130	1		20
Naphthalene	75		75		70-130	0		20
n-Propylbenzene	88		87		70-130	1		20
1,2,3-Trichlorobenzene	78		77		70-130	1		20

Lab Control Sample Analysis
Batch Quality Control

Project Name: CITY OF NEW BEDFORD
Project Number: 115058
Lab Number: L1014045
Report Date: 09/17/10

Parameter	LCS %Recovery	Qual	LCSD %Recovery	Qual	%Recovery Limits	RPD	Qual	RPD Limits
MCP Volatile Organics - Westborough Lab Associated sample(s): 03,05,08 Batch: WG432490-1 WG432490-2								
1,2,4-Trichlorobenzene	81		80		70-130	1		20
1,3,5-Trimethylbenzene	86		86		70-130	0		20
1,2,4-Trimethylbenzene	89		88		70-130	1		20
Ethyl ether	89		92		70-130	3		20
Isopropyl Ether	94		93		70-130	1		20
Ethyl-Tert-Butyl-Ether	91		88		70-130	3		20
Tertiary-Amyl Methyl Ether	93		92		70-130	1		20
1,4-Dioxane	88		90		70-130	2		20

Surrogate	LCS %Recovery	Qual	LCSD %Recovery	Qual	Acceptance Criteria
1,2-Dichloroethane-d4	91		90		70-130
Toluene-d8	100		103		70-130
4-Bromofluorobenzene	99		97		70-130
Dibromofluoromethane	96		94		70-130

INORGANICS
&
MISCELLANEOUS

Project Name: CITY OF NEW BEDFORD
Project Number: 115058

Lab Number: L1014045
Report Date: 09/17/10

SAMPLE RESULTS

Lab ID: L1014045-01
Client ID: MW-28
Sample Location: NBHS
Matrix: Water

Date Collected: 09/09/10 16:20
Date Received: 09/10/10
Field Prep: Not Specified

Parameter	Result	Qualifier	Units	RL	MDL	Dilution Factor	Date Prepared	Date Analyzed	Analytical Method	Analyst
General Chemistry - Westborough Lab										
Nitrogen, Nitrate	ND		mg/l	0.10	--	1	-	09/10/10 22:13	30,4500NO3-F	DD
Sulfate	13		mg/l	10	--	1	09/15/10 13:55	09/15/10 13:55	1,9038	AW
Total Organic Carbon	5.2		mg/l	0.50	--	1	-	09/17/10 07:43	1,9060	DW

Project Name: CITY OF NEW BEDFORD
Project Number: 115058

Lab Number: L1014045
Report Date: 09/17/10

SAMPLE RESULTS

Lab ID: L1014045-02
Client ID: MW-7D
Sample Location: NBHS
Matrix: Water

Date Collected: 09/09/10 14:50
Date Received: 09/10/10
Field Prep: Not Specified

Parameter	Result	Qualifier	Units	RL	MDL	Dilution Factor	Date Prepared	Date Analyzed	Analytical Method	Analyst
General Chemistry - Westborough Lab										
Nitrogen, Nitrate	ND		mg/l	0.10	--	1	-	09/10/10 22:14	30,4500NO3-F	DD
Sulfate	20		mg/l	10	--	1	09/15/10 13:55	09/15/10 13:55	1,9038	AW
Total Organic Carbon	6.1		mg/l	0.50	--	1	-	09/17/10 07:43	1,9060	DW

Project Name: CITY OF NEW BEDFORD
Project Number: 115058

Lab Number: L1014045
Report Date: 09/17/10

SAMPLE RESULTS

Lab ID: L1014045-03
Client ID: MW-701
Sample Location: NBHS
Matrix: Water

Date Collected: 09/09/10 13:50
Date Received: 09/10/10
Field Prep: Not Specified

Parameter	Result	Qualifier	Units	RL	MDL	Dilution Factor	Date Prepared	Date Analyzed	Analytical Method	Analyst
General Chemistry - Westborough Lab										
Nitrogen, Nitrate	ND		mg/l	0.10	--	1	-	09/10/10 22:15	30,4500NO3-F	DD
Sulfate	20		mg/l	10	--	1	09/15/10 13:55	09/15/10 13:55	1,9038	AW
Total Organic Carbon	6.1		mg/l	0.50	--	1	-	09/17/10 07:43	1,9060	DW

Project Name: CITY OF NEW BEDFORD
Project Number: 115058

Lab Number: L1014045
Report Date: 09/17/10

SAMPLE RESULTS

Lab ID: L1014045-05
Client ID: MW-29
Sample Location: NBHS
Matrix: Water

Date Collected: 09/10/10 11:30
Date Received: 09/10/10
Field Prep: Not Specified

Parameter	Result	Qualifier	Units	RL	MDL	Dilution Factor	Date Prepared	Date Analyzed	Analytical Method	Analyst
General Chemistry - Westborough Lab										
Nitrogen, Nitrate	0.11		mg/l	0.10	--	1	-	09/10/10 22:15	30,4500NO3-F	DD
Sulfate	ND		mg/l	10	--	1	09/15/10 13:55	09/15/10 13:55	1,9038	AW
Total Organic Carbon	4.7		mg/l	0.50	--	1	-	09/17/10 07:43	1,9060	DW

Project Name: CITY OF NEW BEDFORD
Project Number: 115058

Lab Number: L1014045
Report Date: 09/17/10

SAMPLE RESULTS

Lab ID: L1014045-07
Client ID: MW-5
Sample Location: NBHS
Matrix: Water

Date Collected: 09/10/10 14:45
Date Received: 09/10/10
Field Prep: Not Specified

Parameter	Result	Qualifier	Units	RL	MDL	Dilution Factor	Date Prepared	Date Analyzed	Analytical Method	Analyst
General Chemistry - Westborough Lab										
Nitrogen, Nitrate	ND		mg/l	0.10	--	1	-	09/10/10 22:16	30,4500NO3-F	DD
Sulfate	ND		mg/l	10	--	1	09/15/10 13:55	09/15/10 13:55	1,9038	AW
Total Organic Carbon	6.8		mg/l	0.50	--	1	-	09/17/10 07:43	1,9060	DW

Project Name: CITY OF NEW BEDFORD
Project Number: 115058

Lab Number: L1014045
Report Date: 09/17/10

SAMPLE RESULTS

Lab ID: L1014045-08
Client ID: MW-5D
Sample Location: NBHS
Matrix: Water

Date Collected: 09/10/10 15:25
Date Received: 09/10/10
Field Prep: Not Specified

Parameter	Result	Qualifier	Units	RL	MDL	Dilution Factor	Date Prepared	Date Analyzed	Analytical Method	Analyst
General Chemistry - Westborough Lab										
Nitrogen, Nitrate	0.28		mg/l	0.10	--	1	-	09/10/10 22:17	30,4500NO3-F	DD
Sulfate	10		mg/l	10	--	1	09/15/10 13:55	09/15/10 13:55	1,9038	AW
Total Organic Carbon	2.9		mg/l	0.50	--	1	-	09/17/10 07:43	1,9060	DW

Project Name: CITY OF NEW BEDFORD **Lab Number:** L1014045

Project Number: 115058 **Report Date:** 09/17/10

Method Blank Analysis
Batch Quality Control

Parameter	Result	Qualifier	Units	RDL	Dilution Factor	Date Prepared	Date Analyzed	Analytical Method	Analyst
General Chemistry - Westborough Lab for sample(s): 01-03,05,07-08 Batch: WG431896-2									
Nitrogen, Nitrate	ND		mg/l	0.10	1	-	09/10/10 21:56	30,4500NO3-F	DD
General Chemistry - Westborough Lab for sample(s): 01-03,05,07-08 Batch: WG432530-1									
Sulfate	ND		mg/l	10	1	09/15/10 13:55	09/15/10 13:55	1,9038	AW
General Chemistry - Westborough Lab for sample(s): 01-03,05,07-08 Batch: WG432889-1									
Total Organic Carbon	ND		mg/l	0.50	1	-	09/17/10 07:43	1,9060	DW

Lab Control Sample Analysis
Batch Quality Control

Project Name: CITY OF NEW BEDFORD
Project Number: 115058

Lab Number: L1014045
Report Date: 09/17/10

Parameter	LCS %Recovery	Qual	LCSD %Recovery	Qual	%Recovery Limits	RPD	Qual	RPD Limits
General Chemistry - Westborough Lab Associated sample(s): 01-03,05,07-08 Batch: WG431896-1								
Nitrogen, Nitrate	102		-		90-110	-		
General Chemistry - Westborough Lab Associated sample(s): 01-03,05,07-08 Batch: WG432530-2								
Sulfate	105		-		90-115	-		
General Chemistry - Westborough Lab Associated sample(s): 01-03,05,07-08 Batch: WG432889-2								
Total Organic Carbon	103		-		90-110	-		

Matrix Spike Analysis
Batch Quality Control

Project Name: CITY OF NEW BEDFORD
Project Number: 115058
Lab Number: L1014045
Report Date: 09/17/10

Parameter	Native Sample	MS Added	MS Found	MS %Recovery	Qual	MSD Found	MSD %Recovery	Qual	Recovery Limits	RPD	Qual	RPD Limits
General Chemistry - Westborough Lab Associated sample(s): 01-03,05,07-08 QC Batch ID: WG431896-3 QC Sample: L1014044-02 Client ID: MS Sample												
Nitrogen, Nitrate	ND	4	4.1	102		-	-		83-113	-		17
General Chemistry - Westborough Lab Associated sample(s): 01-03,05,07-08 QC Batch ID: WG432530-4 QC Sample: L1014045-05 Client ID: MW-29												
Sulfate	ND	20	32	**160**	Q	-	-		55-147	-		14
General Chemistry - Westborough Lab Associated sample(s): 01-03,05,07-08 QC Batch ID: WG432889-3 QC Sample: L1014045-01 Client ID: MW-28												
Total Organic Carbon	5.2	4	9.5	107		-	-		80-120	-		20

Lab Duplicate Analysis
Batch Quality Control

Project Name: CITY OF NEW BEDFORD
Project Number: 115058

Lab Number: L1014045
Report Date: 09/17/10

Parameter	Native Sample	Duplicate Sample	Units	RPD	Qual	RPD Limits
General Chemistry - Westborough Lab Associated sample(s): 01-03,05,07-08 QC Batch ID: WG431896-4 QC Sample: L1014044-02 Client ID: DUP Sample						
Nitrogen, Nitrate	ND	ND	mg/l	NC		17
General Chemistry - Westborough Lab Associated sample(s): 01-03,05,07-08 QC Batch ID: WG432530-3 QC Sample: L1014045-02 Client ID: MW-7D						
Sulfate	20	19	mg/l	5		14
General Chemistry - Westborough Lab Associated sample(s): 01-03,05,07-08 QC Batch ID: WG432889-4 QC Sample: L1014045-08 Client ID: MW-5D						
Total Organic Carbon	2.9	3.0	mg/l	3		20

Project Name: CITY OF NEW BEDFORD
Project Number: 115058

Lab Number: L1014045
Report Date: 09/17/10

Sample Receipt and Container Information

Were project specific reporting limits specified? YES

Reagent H2O Preserved Vials Frozen on: NA

Cooler Information Custody Seal

Cooler	
A	Absent

Container Information

Container ID	Container Type	Cooler	pH	Temp deg C	Pres	Seal	Analysis(*)
L1014045-01A	Vial HCl preserved	A	N/A	2.4	Y	Absent	MCP-8260-10(14)
L1014045-01B	Vial HCl preserved	A	N/A	2.4	Y	Absent	MCP-8260-10(14)
L1014045-01C	Vial H2SO4 preserved	A	N/A	2.4	Y	Absent	TOC-9060(28)
L1014045-01D	Vial H2SO4 preserved	A	N/A	2.4	Y	Absent	TOC-9060(28)
L1014045-01E	Plastic 250ml unpreserved	A	6	2.4	Y	Absent	SO4-9038(28),NO3-4500(2)
L1014045-02A	Vial HCl preserved	A	N/A	2.4	Y	Absent	MCP-8260-10(14)
L1014045-02B	Vial HCl preserved	A	N/A	2.4	Y	Absent	MCP-8260-10(14)
L1014045-02C	Vial H2SO4 preserved	A	N/A	2.4	Y	Absent	TOC-9060(28)
L1014045-02D	Vial H2SO4 preserved	A	N/A	2.4	Y	Absent	TOC-9060(28)
L1014045-02E	Plastic 250ml unpreserved	A	6	2.4	Y	Absent	SO4-9038(28),NO3-4500(2)
L1014045-03A	Vial HCl preserved	A	N/A	2.4	Y	Absent	MCP-8260-10(14)
L1014045-03B	Vial HCl preserved	A	N/A	2.4	Y	Absent	MCP-8260-10(14)
L1014045-03C	Vial H2SO4 preserved	A	N/A	2.4	Y	Absent	TOC-9060(28)
L1014045-03D	Vial H2SO4 preserved	A	N/A	2.4	Y	Absent	TOC-9060(28)
L1014045-03E	Plastic 250ml unpreserved	A	6	2.4	Y	Absent	SO4-9038(28),NO3-4500(2)
L1014045-04A	Vial HCl preserved	A	N/A	2.4	Y	Absent	MCP-8260-10(14)
L1014045-04B	Vial HCl preserved	A	N/A	2.4	Y	Absent	MCP-8260-10(14)
L1014045-05A	Vial HCl preserved	A	N/A	2.4	Y	Absent	MCP-8260-10(14)
L1014045-05B	Vial HCl preserved	A	N/A	2.4	Y	Absent	MCP-8260-10(14)
L1014045-05C	Vial H2SO4 preserved	A	N/A	2.4	Y	Absent	TOC-9060(28)
L1014045-05D	Vial H2SO4 preserved	A	N/A	2.4	Y	Absent	TOC-9060(28)
L1014045-05E	Plastic 500ml unpreserved	A	6	2.4	Y	Absent	SO4-9038(28),NO3-4500(2)
L1014045-06A	Vial HCl preserved	A	N/A	2.4	Y	Absent	MCP-8260-10(14)
L1014045-06B	Vial HCl preserved	A	N/A	2.4	Y	Absent	MCP-8260-10(14)
L1014045-07A	Vial HCl preserved	A	N/A	2.4	Y	Absent	MCP-8260-10(14)
L1014045-07B	Vial HCl preserved	A	N/A	2.4	Y	Absent	MCP-8260-10(14)
L1014045-07C	Vial H2SO4 preserved	A	N/A	2.4	Y	Absent	TOC-9060(28)

*Values in parentheses indicate holding time in days

Project Name: CITY OF NEW BEDFORD
Project Number: 115058

Lab Number: L1014045
Report Date: 09/17/10

Container Information

Container ID	Container Type	Cooler	pH	Temp deg C	Pres	Seal	Analysis(*)
L1014045-07D	Vial H2SO4 preserved	A	N/A	2.4	Y	Absent	TOC-9060(28)
L1014045-07E	Plastic 500ml unpreserved	A	6	2.4	Y	Absent	SO4-9038(28),NO3-4500(2)
L1014045-08A	Vial HCl preserved	A	N/A	2.4	Y	Absent	MCP-8260-10(14)
L1014045-08B	Vial HCl preserved	A	N/A	2.4	Y	Absent	MCP-8260-10(14)
L1014045-08C	Vial H2SO4 preserved	A	N/A	2.4	Y	Absent	TOC-9060(28)
L1014045-08D	Vial H2SO4 preserved	A	N/A	2.4	Y	Absent	TOC-9060(28)
L1014045-08E	Plastic 500ml unpreserved	A	6	2.4	Y	Absent	SO4-9038(28),NO3-4500(2)
L1014045-09A	Vial HCl preserved	A	N/A	2.4	Y	Absent	MCP-8260-10(14)

*Values in parentheses indicate holding time in days

Project Name:	CITY OF NEW BEDFORD	**Lab Number:**	L1014045
Project Number:	115058	**Report Date:**	09/17/10

GLOSSARY

Acronyms

EPA	· Environmental Protection Agency.
LCS	· Laboratory Control Sample: A sample matrix, free from the analytes of interest, spiked with verified known amounts of analytes or a material containing known and verified amounts of analytes.
LCSD	· Laboratory Control Sample Duplicate: Refer to LCS.
MDL	· Method Detection Limit: This value represents the level to which target analyte concentrations are reported as estimated values, when those target analyte concentrations are quantified below the reporting limit (RL). The MDL includes any adjustments from dilutions, concentrations or moisture content, where applicable.
MS	· Matrix Spike Sample: A sample prepared by adding a known mass of target analyte to a specified amount of matrix sample for which an independent estimate of target analyte concentration is available.
MSD	· Matrix Spike Sample Duplicate: Refer to MS.
NA	· Not Applicable.
NC	· Not Calculated: Term is utilized when one or more of the results utilized in the calculation are non-detect at the parameter's reporting unit.
NI	· Not Ignitable.
RL	· Reporting Limit: The value at which an instrument can accurately measure an analyte at a specific concentration. The RL includes any adjustments from dilutions, concentrations or moisture content, where applicable.
RPD	· Relative Percent Difference: The results from matrix and/or matrix spike duplicates are primarily designed to assess the precision of analytical results in a given matrix and are expressed as relative percent difference (RPD). Values which are less than five times the reporting limit for any individual parameter are evaluated by utilizing the absolute difference between the values; although the RPD value will be provided in the report.

Terms

Analytical Method: Both the document from which the method originates and the analytical reference method. (Example: EPA 8260B is shown as 1,8260B.) The codes for the reference method documents are provided in the References section of the Addendum.

Data Qualifiers

A	- Spectra identified as "Aldol Condensation Product".
B	- The analyte was detected above the reporting limit in the associated method blank. Flag only applies to associated field samples that have detectable concentrations of the analyte at less than five times (5x) the concentration found in the blank. For MCP-related projects, flag only applies to associated field samples that have detectable concentrations of the analyte at less than ten times (10x) the concentration found in the blank. For DOD-related projects, flag only applies to associated field samples that have detectable concentrations of the analyte at less than ten times (10x) the concentration found in the blank AND the analyte was detected above one-half the reporting limit (or above the reporting limit for common lab contaminants) in the associated method blank.
D	- Concentration of analyte was quantified from diluted analysis. Flag only applies to field samples that have detectable concentrations of the analyte.
E	- Concentration of analyte exceeds the range of the calibration curve and/or linear range of the instrument.
H	- The analysis of pH was performed beyond the regulatory-required holding time of 15 minutes from the time of sample collection.
I	- The RPD between the results for the two columns exceeds the method-specified criteria; however, the lower value has been reported due to obvious interference.
P	- The RPD between the results for the two columns exceeds the method-specified criteria.
Q	- The quality control sample exceeds the associated acceptance criteria. Note: This flag is not applicable for matrix spike recoveries when the sample concentration is greater than 4x the spike added or for batch duplicate RPD when the sample concentrations are less than 5x the RL. (Metals only.)
R	- Analytical results are from sample re-analysis.

Report Format: Data Usability Report

Project Name:	CITY OF NEW BEDFORD	**Lab Number:**	L1014045
Project Number:	115058	**Report Date:**	09/17/10

Data Qualifiers

RE - Analytical results are from sample re-extraction.

J - Estimated value. This represents an estimated concentration for Tentatively Identified Compounds (TICs).

ND - Not detected at the reporting limit (RL) for the sample.

Report Format: Data Usability Report

Project Name: CITY OF NEW BEDFORD **Lab Number:** L1014045
Project Number: 115058 **Report Date:** 09/17/10

REFERENCES

1 Test Methods for Evaluating Solid Waste: Physical/Chemical Methods. EPA SW-846. Third Edition. Updates I - IIIA, 1997.

30 Standard Methods for the Examination of Water and Wastewater. APHA-AWWA-WPCF. 18th Edition. 1992.

97 EPA Test Methods (SW-846) with QC Requirements & Performance Standards for the Analysis of EPA SW-846 Methods under the Massachusetts Contingency Plan, WSC-CAM-IIA, IIB, IIIA, IIIB, IIIC, IIID, VA, VB, VC, VIA, VIB, VIIIA and VIIIB, July 2010.

LIMITATION OF LIABILITIES

Alpha Analytical performs services with reasonable care and diligence normal to the analytical testing laboratory industry. In the event of an error, the sole and exclusive responsibility of Alpha Analytical shall be to re-perform the work at it's own expense. In no event shall Alpha Analytical be held liable for any incidental, consequential or special damages, including but not limited to, damages in any way connected with the use of, interpretation of, information or analysis provided by Alpha Analytical.

We strongly urge our clients to comply with EPA protocol regarding sample volume, preservation, cooling, containers, sampling procedures, holding time and splitting of samples in the field.

Certificate/Approval Program Summary

Last revised July 19, 2010 - Westboro Facility

The following list includes only those analytes/methods for which certification/approval is currently held.
For a complete listing of analytes for the referenced methods, please contact your Alpha Customer Service Representative.

Connecticut Department of Public Health Certificate/Lab ID: PH-0574. ***NELAP Accredited Solid Waste/Soil.***

Drinking Water (Inorganic Parameters: Color, pH, Turbidity, Conductivity, Alkalinity, Chloride, Free Residual Chlorine, Fluoride, Calcium Hardness, Sulfate, Nitrate, Nitrite, Aluminum, Antimony, Arsenic, Barium, Beryllium, Cadmium, Calcium, Chromium, Copper, Iron, Lead, Magnesium, Manganese, Mercury, Molybdenum, Nickel, Potassium, Selenium, Silver, Sodium, Thallium, Vanadium, Zinc, Total Dissolved Solids, Total Organic Carbon, Total Cyanide, Perchlorate. Organic Parameters: Volatile Organics 524.2, Total Trihalomethanes 524.2, 1,2-Dibromo-3-chloropropane (DBCP), Ethylene Dibromide (EDB), 1,4-Dioxane (Mod 8270). Microbiology Parameters: Total Coliform-MF mEndo (SM9222B), Total Coliform – Colilert (SM9223 P/A), E. Coli. – Colilert (SM9223 P/A), HPC – Pour Plate (SM9215B), Fecal Coliform – MF m-FC (SM9222D))
Wastewater/Non-Potable Water (Inorganic Parameters: Color, pH, Conductivity, Acidity, Alkalinity, Chloride, Total Residual Chlorine, Fluoride, Total Hardness, Silica, Sulfate, Sulfide, Ammonia, Kjeldahl Nitrogen, Nitrate, Nitrite, O-Phosphate, Total Phosphorus, Aluminum, Antimony, Arsenic, Barium, Beryllium, Boron, Cadmium, Calcium, Chromium, Hexavalent Chromium, Cobalt, Copper, Iron, Lead, Magnesium, Manganese, Mercury, Molybdenum, Nickel, Potassium, Selenium, Silver, Sodium, Strontium, Thallium, Tin, Titanium, Vanadium, Zinc, Total Residue (Solids), Total Dissolved Solids, Total Suspended Solids (non-filterable), BOD, CBOD, COD, TOC, Total Cyanide, Phenolics, Foaming Agents (MBAS), Bromide, Oil and Grease. Organic Parameters: PCBs, Organochlorine Pesticides, Technical Chlordane, Toxaphene, 2,4-D, 2,4,5-T, 2,4,5-TP(Silvex), Acid Extractables (Phenols), Benzidines, Phthalate Esters, Nitrosamines, Nitroaromatics & Isophorone, Polynuclear Aromatic Hydrocarbons, Haloethers, Chlorinated Hydrocarbons, Volatile Organics, TPH (HEM/SGT), Extractable Petroleum Hydrocarbons (ETPH), MA-EPH, MA-VPH. Microbiology Parameters: Total Coliform – MF mEndo (SM9222B), Total Coliform – MTF (SM9221B), HPC – Pour Plate (SM9215B), Fecal Coliform – MF m-FC (SM9222D), Fecal Coliform – A-1 Broth (SM9221E).)
Solid Waste/Soil (Inorganic Parameters: pH, Sulfide, Aluminum, Antimony, Arsenic, Barium, Beryllium, Boron, Cadmium, Calcium, Chromium, Hexavalent Chromium, Cobalt, Copper, Iron, Lead, Magnesium, Manganese, Mercury, Molybdenum, Nickel, Potassium, Selenium, Silver, Sodium, Thallium, Tin, Vanadium, Zinc, Total Cyanide, Ignitability, Phenolics, Corrosivity, TCLP Leach (1311), SPLP Leach (1312 metals only), Reactivity. Organic Parameters: PCBs, PCBs in Oil, Organochlorine Pesticides, Technical Chlordane, Toxaphene, Extractable Petroleum Hydrocarbons (ETPH), MA-EPH, MA-VPH, Dicamba, 2,4-D, 2,4,5-T, 2,4,5-TP(Silvex), Volatile Organics, Acid Extractables (Phenols), 3.3'-Dichlorobenzidine, Phthalates, Nitrosamines, Nitroaromatics & Cyclic Ketones, PAHs, Haloethers, Chlorinated Hydrocarbons.)

Maine Department of Human Services Certificate/Lab ID: 2009024.
Drinking Water (Inorganic Parameters: SM9215B, 9222D, 9223B, EPA 180.1, 300.0, 353.2, SM2130B, 2320B, 4500Cl-D, 4500CN-C, 4500CN-E, 4500F-C, 4500H+B, 4500NO3-F, EPA 200.7, EPA 200.8, 245.1, EPA 300.0. Organic Parameters: 504.1, 524.2.)
Wastewater/Non-Potable Water (Inorganic Parameters: EPA 120.1, 1664A, 350.1, 351.1, 353.2, 410.4, 420.1, Lachat 10-107-06-1-B, SM2320B, 2340B, 2510B, 2540C, 2540D, 426C, 4500Cl-D, 4500Cl-E, 4500CN-C, 4500CN-E, 4500F-B, 4500F-C, 4500H+B, 4500Norg-B, 4500Norg-C, 4500NH3-B, 4500NH3-G, 4500NH3-H, 4500NO3-F, 4500P-B.5, 4500P-E, 5210B, 5220D, 5310C, EPA 200.7, 200.8, 245.1. Organic Parameters: 608, 624, ME DRO, ME GRO, MA EPH, MA VPH.)
*Solid Waste/Soil (*Organic Parameters: ME DRO, ME GRO, MA EPH, MA VPH.)

Massachusetts Department of Environmental Protection Certificate/Lab ID: M-MA086.
Drinking Water
Inorganic Parameters: (EPA 200.8 for: Sb,As,Ba,Be,Cd,Cr,Cu,Pb,Ni,Se,Tl)
(EPA 200.7 for: Ba,Be,Ca,Cd,Cr,Cu,Na,Ni) 245.1, (300.0 for: Nitrate-N, Fluoride, Sulfate)
353.2 for: Nitrate-N, Nitrite-N; SM4500NO3-F, 4500F-C, 4500CN-CE, EPA 180.1, SM2130B, SM4500Cl-D, 2320B, SM2540C, SM4500H-B.
Organic Parameters: (EPA 524.2 for: Trihalomethanes, Volatile Organics)
(504.1 for: 1,2-Dibromoethane, 1,2-Dibromo-3-Chloropropane), 314.0, 332.
Microbiology Parameters: SM9215B; ENZ. SUB. SM9223; MF-SM9222D
Non-Potable Water
Inorganic Parameters:, (EPA 200.8 for: Al,Sb,As,Be,Cd,Cr,Cu,Pb,Mn,Ni,Se,Ag,Tl,Zn)
(EPA 200.7 for: Al,Sb,As,Be,Cd,Cr,Co,Cu,Fe,Pb,Mn,Mo,Ni,Se,Ag,Sr,Ti,Tl, V,Zn,Ca,Mg,Na,K)
245.1, SM4500H,B, EPA 120.1, SM2510B, 2540C, 2540B, 2340B, 2320B, 4500CL-E, 4500F-BC, 426C, SM4500NH3-BH, (EPA 350.1 for: Ammonia-N), LACHAT 10-107-06-1-B for Ammonia-N, SM4500NO3-F, 353.2 for Nitrate-N, SM4500NH3-B,C-Titr, SM4500NH3-BC-NES, EPA 351.1, SM4500P-E, 4500P-B,E, 5220D, EPA 410.4, SM 5210B, 5310C, 4500CL-D, EPA 1664, SM14 510AC, EPA 420, SM4500-CN-CE, SM2540D.
Organic Parameters: (EPA 624 for Volatile Halocarbons, Volatile Aromatics)

(608 for: Chlordane, Aldrin, Dieldrin, DDD, DDE, DDT, Heptachlor, Heptachlor Epoxide, PCBs-Water), EPA 625 for SVOC Acid Extractables and SVOC Base/Neutral Extractables, 600/4-81-045-PCB-Oil

New Hampshire Department of Environmental Services Certificate/Lab ID: 200307. ***NELAP Accredited.***
Drinking Water (Inorganic Parameters: SM6215B, 9222B, 9223B Colilert, EPA 200.7, 200.8, 245.2, 120.1, 300.0, 314.0, SM4500CN-E, 4500H+B, 4500NO3-F, 2320B, 2510B, 2540C, 4500F-C, 5310C, 2120B, EPA 331.0. Organic Parameters: 504.1, 524.2, SM6251B.)
Non-Potable Water (Inorganic Parameters: SM9222D, 9221B, 9222B, 9221E-EC, EPA 200.7, 200.8, 245.1, 245.2, SW-846 6010B, 6020, 7196A, 7470A, SM3500-CR-D, EPA 120.1, 300.0, 350.1, 351.1, 353.2, 420.1, 1664A, SW-846 9010, 9030, 9040B, SM426C, SM2310B, 2540B, 2540D, 4500H+B, 4500NH3-H, 4500NH3-E, 4500NO2-B, 4500P-E, 4500-S2-D, 5210B, 2320B, 2540C, 4500F-C, 5310C, 5540C, LACHAT 10-117-07-1-B, LACHAT 10-107-06-1-B, LACHAT 10-107-04-1-C, LACHAT 10-107-04-1-J, LACHAT 10-117-07-1-A, SM4500CL-E, LACHAT 10-204-00-1-A, LACHAT 10-107-06-2-D. Organic Parameters: SW-846 3005A, 3015A, 3510C, 5030B, 8021B, 8260B, 8270C, 8330, EPA 624, 625, 608, SW-846 8082, 8081A.)
Solid & Chemical Materials (Inorganic Parameters: SW-846 6010B, 7196A, 7471A, 7.3.3.2, 7.3.4.2, 1010, 1030, 9010, 9012A, 9014, 9030B, 9040, 9045C, 9050C, 1311, 3005A, 3050B, 3051A. Organic Parameters: SW-846 3540C, 3545, 3580A, 5030B, 5035, 8021B, 8260B, 8270C, 8330, 8151A, 8082, 8081A.)

New Jersey Department of Environmental Protection Certificate/Lab ID: MA935. ***NELAP Accredited.***
Drinking Water (Inorganic Parameters: SM9222B, 9221E, 9223B, 9215B, 4500NO3-F, 4500F-C, EPA 300.0, 200.7, 2540C, 2320B, 314.0, SM2120B, 2510B, 5310C, SM4500H-B, EPA 200.8, 245.2. Organic Parameters: 504.1, SM6251B, 524.2.)
Non-Potable Water (Inorganic Parameters: SM5210B, EPA 410.4, SM5220D, 4500Cl-D, EPA 300.0, SM2120B, SM4500F-BC, EPA 200.7, 351.1, LACHAT 10-107-06-2-D, EPA 353.2, SM4500NO3-F, 4500NO2-B, EPA 1664A, SM5310B, C or D, 4500-PE, EPA 420.1, SM4500P-B5+E, 2540B, 2540C, 2540D, EPA 120.1, SM2510B, SM15 426C, SM9221CE, 9222D, 9221B, 9222B, 9215B, 2310B, 2320B, 4500NH3-H, 4500-S D, EPA 350.1, SM5210B, SW-846 3015, 6020, 7470A, 5540C, 4500H-B, EPA 200.8, SM3500Cr-D, EPA 245.1, 245.2, SW-846 9040B, 3005A, EPA 6010B, 7196A, SW-846 9010B, 9030B. Organic Parameters: SW-846 8260B, 8270C, 3510C, EPA 608, 624, 625, SW-846 5030B, 8021B, 8081A, 8082, 8151A, 8330, NJ OQA-QAM-025 Rev.7.)
Solid & Chemical Materials (Inorganic Parameters: SW-846 9040B, 3005A, 6010B, 7196A, 5030B, 9010B, 9030B, 1030, 1311, 3050B, 3051, 7471A, 9014, 9012A, 9045C, 9050A, 9065. Organic Parameters: SW-846 8021B, 8081A, 8082, 8151A, 8330, 8260B, 8270C, 1311, 1312, 3540C, 3545, 3550B, 3580A, 5035L, 5035H, NJ OQA-QAM-025 Rev.7.)

New York Department of Health Certificate/Lab ID: 11148. ***NELAP Accredited.***
Drinking Water (Inorganic Parameters: SM9223B, 9222B, 9215B, EPA 200.8, 200.7, 245.2, SM5310C, EPA 314.0, 332.0, SM2320B, EPA 300.0, SM2120B, 4500CN-E, 4500F-C, 4500H-B, 4500NO3-F, 2540C, EPA 120.1, SM 2510B. Organic Parameters: EPA 524.2, 504.1.)
Non-Potable Water (Inorganic Parameters: SM9221E, 9222D, 9221B, 9222B, 9215B, 5210B, EPA 410.4, SM5220D, 2310B-4a, 2320B, EPA 200.7, 300.0, LACHAT 10-117-07-1A or B, SM4500Cl-E, 4500F-C, SM15 426C, EPA 350.1, LACHAT 10-107-06-1-B, SM4500NH3-H, EPA 351.1, LACHAT 10-107-06-2, EPA 353.2, LACHAT 10-107-041-C, SM4500-NO3-F, 4500-NO2-B, 4500P-E, 2540C, 2540B, 2540D, EPA 200.8, EPA 6010B, 6020, EPA 7196A, S\M3500Cr-D, EPA 245.1, 245.2, 7470A, SM2120B, SM4500-CN-E LACHAT 10-204-00-1-A, EPA 9040B, SM4500-HB, EPA 1664A, SM5310C, EPA 420.1, SM14 510C, EPA 120.1, SM2510B, SM4500S-D, SM5540C, EPA 3005A, 3015. Organic Parameters: EPA 624, 8260B, 8270C, 625, 608, 8081A, 8151A, 8330, 8082, EPA 3510C, 5030B, 9010B, 9030B.)
Solid & Hazardous Waste (Inorganic Parameters: 1010, 1030, SW-846 Ch 7 Sec 7.3, EPA 6010B, 7196A, 7471A, 9012A, 9014, 9040B, 9045C, 9065, 9050, EPA 1311, 1312, 3005A, 3050B, 9010B, 9030B. Organic Parameters: EPA 8260B, 8270C, 8081A, 8151A, 8330, 8082, 3540C, 3545, 3546, 3580, 5030B, 5035.)

North Carolina Department of the Environment and Natural Resources Certificate/Lab ID : 666. Organic Parameters: MA-EPH, MA-VPH.

Pennsylvania Department of Environmental Protection Certificate/Lab ID : 68-03671. ***NELAP Accredited.***
Non-Potable Water (Organic Parameters: EPA 3510C, 5030B, 625, 624. 608, 8081A, 8082, 8151A, 8260B, 8270C, 8330)
Solid & Hazardous Waste (Inorganic Parameters: EPA 1010, 1030, 1311, 3050B, 3051, 6010B, EPA 7.3.3.2, EPA 7.3.4.2, 7196A, 7471A, 9010B, 9012A, 9014, 9040B, 9045C, 9050, 9065. Organic Parameters: 3540C, 3545, 3580A, 5035, 8021B, 8081A, 8082, 8151A, 8260B, 8270C, 8330)

Rhode Island Department of Health Certificate/Lab ID: LAO00065. ***NELAP Accredited via NY-DOH.***
Refer to MA-DEP Certificate for Potable and Non-Potable Water.
Refer to NY-DOH Certificate for Potable and Non-Potable Water.

Texas Commisson on Environmental Quality Certificate/Lab ID: T104704476-09-1. ***NELAP Accredited.***
Non-Potable Water (Inorganic Parameters: EPA 120.1, 1664, 200.7, 200.8, 245.1, 245.2, 300.0, 350.1, 351.1, 353.2, 376.2, 410.4, 420.1, 6010, 6020, 7196, 7470, 9040, SM 2120B, 2310B, 2320B, 2510B, 2540B, 2540C, 2540D, 426C, 4500CL-E, 4500CN-E, 4500F-C, 4500H+B, 4500NH3-H, 4500NO2B, 4500P-E, 4500 S2¯D, 510C, 5210B, 5220D, 5310C, 5540C. Organic Parameters: EPA 608, 624, 625, 8081, 8082, 8151, 8260, 8270, 8330.)

Solid & Hazardous Waste (Inorganic Parameters: EPA 1311, 1312, 9012, 9014, 9040, 9045, 9050, 9065.)

Department of Defense Certificate/Lab ID: L2217.
Drinking Water (Inorganic Parameters: SM 4500H-B. Organic Parameters: EPA 524.2, 504.1.)

Non-Potable Water (Inorganic Parameters: EPA 200.7, 200.8, 6010B, 6020, 245.1, 245.2, 7470A, 9040B, 300.0, 9251, 9038, 350.1, 353.2, 351.1, 120.1, 9050A , 410.4, 9060, 1664, 420.1, LACHAT 10-107-06-1-B, SM 4500CN-E, 4500H-B, 4500CL-E, 4500F-BC, 4500SO4-E, 426C, 4500NH3-B, 4500NH3-H, 4500NO3-F, 4500NO2-B, 4500Norg-C, 4500PE, 2510B, 5540C, 5220D, 5310C, 2540B, 2540C, 2540D, 510C, 4500S2-AD, 3005A, 3015, 9010B, 9030B. Organic Parameters: EPA 8260B, 8270C, 8330, 625, 8082, 8151A, 8081A, 3510C, 5030B, MassDEP EPH, MassDEP VPH.)

Solid & Hazardous Waste (Inorganic Parameters: EPA 200.7, 6010B, 7471A, 9040B, 9045C, 9065, 420.1, 9012A, 6860, 1311, 1312, 3050B, 9030B, 3051, 9010B, 3540C, SM 510ABC, 4500CN-CE, 2540G, SW-846 7.3, Organic Parameters: EPA 8260B, 8270C, 8330, 8082, 8081A, 8151A, 3545, 3546, 3580, 5035, MassDEP EPH, MassDEP VPH.)

Analytes Not Accredited by NELAP
Certification is not available by NELAP for the following analytes: **EPA 8260B:** Freon-113, 1,2,4,5-Tetramethylbenzene, 4-Ethyltoluene. **EPA 8330A:** PETN, Picric Acid, Nitroglycerine, 2,6-DANT, 2,4-DANT. **EPA 8270C:** Methyl naphthalene, Dimethyl naphthalene, Total Methylnapthalenes, Total Dimethylnaphthalenes, 1,4-Diphenylhydrazine (Azobenzene). **EPA 625:** 4-Chloroaniline. **EPA 350.1** for Ammonia in a Soil matrix.

CHAIN OF CUSTODY

PAGE ____ OF ____

Date Rec'd in Lab: 9/10/10

ALPHA Job #: L1014045

ALPHA ANALYTICAL

WESTBORO, MA
TEL: 508-898-9220
FAX: 508-898-9193

MANSFIELD, MA
TEL: 508-822-9300
FAX: 508-822-3288

Client Information

Client: TRC
Address: 650 Suffolk St
Lowell Ma. 01854
Phone: 978-970-5600
Fax:
Email: DSullivan@TRCSolutions.com
☐ These samples have been previously analyzed by Alpha

Project Information

Project Name: City of New Bedford
Project Location: NBHS
Project #: 115058
Project Manager: David Sullivan
ALPHA Quote #:

Turn-Around Time

☒ Standard ☐ RUSH (only confirmed if pre-approved!)
Date Due: 5 Day 9/17/10 Time:

Report Information - Data Deliverables

☐ FAX ☒ EMAIL
☐ ADEx ☐ Add'l Deliverables

Billing Information

☐ Same as Client info PO #:

Regulatory Requirements/Report Limits

State /Fed Program MCP/GW-1,2,3 Criteria

MA MCP PRESUMPTIVE CERTAINTY --- CT REASONABLE CONFIDENCE PROTO

☒ Yes ☐ No Are MCP Analytical Methods Required?
☐ Yes ☐ No Is Matrix Spike (MS) Required on this SDG? (If yes see note in Comments)
☐ Yes ☒ No Are CT RCP (Reasonable Confidence Protocols) Required?

Other Project Specific Requirements/Comments/Detection Limits:

If MS is required , indicate in Sample Specific Comments which samples and what tests MS to be performed.
(Note: All ***CAM*** methods for inorganic analyses require MS every 20 soil samples)

SAMPLE HANDLING
Filtration
☐ Done
☐ Not needed
☐ Lab to do
Preservation
☐ Lab to do
(Please specify below)

ALPHA Lab ID (Lab Use Only)	Sample ID	Collection Date	Collection Time	Sample Matrix	Sampler's Initials	VOCs 8260+TO15 List	Nitrate	Sulfate	TOC	Sample Specific Comments	TOTAL # BOTTLES
14045 1	MW-28	9/9/10	1620	GW		X	X	X	X		5
2	MW-7D	9/9/10	1450	GW		X	X	X	X		5
3	MW-701	9/9/10	1350	GW		X	X	X	X		5
4	MW-20	9/10/10	1030	GW		X					2
5	MW-29	9/10/10	1130	GW		X	X	X	X		5
6	MW-24	9/10/10	1255	GW		X					2
7	MW-5	9/10/10	1445	GW		X	X	X	X		5
8	MW-5D	9/10/10	1525	GW		X	X	X	X		5
9	TRIP Blank	9/3/10	—	GW		X					1

Container Type	V	P→	V
Preservative	B	A→	D

PLEASE ANSWER QUESTIONS ABOVE!

IS YOUR PROJECT MA MCP *or* CT RCP?

Relinquished By:	Date/Time	Received By:	Date/Time
[signature]	9/10/10 1700	[signature]	9/10/10 1700

Please print clearly, legibly and completely. Samples can not be logged in and turnaround time clock will not start until any ambiguities are resolved. All samples submitted are subject to Alpha's Terms and Conditions. See reverse side.

FORM NO: 01-01 (rev. 18-Jan-2010)

Serial_No:09171016:14

7A
VOLATILE CONTINUING CALIBRATION CHECK

Lab Name: Alpha Analytical Labs

SDG No.: L1014045

Instrument ID: Jack.i Calibration Date: 14-SEP-2010 Time: 08:06

Lab File ID: 0914A05.D Init. Calib. Date(s): 03-SEP-2 03-SEP-2

Sample No: 8260 CCAL Init. Calib. Times : 12:12 15:59

Compound	RRF	RRF	MIN RRF	%D	MAX %D	
dichlorodifluoromethane	.68646	.59939	.1	13	20	
chloromethane	.78155	.7652	.1	2	20	
vinyl chloride	1.0685	.95062	.1	11	20	
bromomethane	.57544	.44853	.1	22	20	F
chloroethane	.64096	.49001	.1	24	20	F
trichlorofluoromethane	1.5116	1.4694	.1	3	20	
ethyl ether	.42693	.36292	.05	15	20	
1,1,-dichloroethene	.94941	.86374	.1	9	20	
carbon disulfide	2.6401	1.9533	.1	26	20	F
freon-113	.99642	1.0569	.1	-6	20	
iodomethane	100	76.386	.05	24	20	F
acrolien	.0374	.06193	.05	-66	20	F
methylene chloride	.72789	.75292	.1	-3	20	
acetone	.10251	.10882	.1	-6	20	
trans-1,2-dichloroethene	.76338	.75541	.1	1	20	
methyl acetate	.27941	.3142	.1	-12	20	
methyl tert butyl ether	1.4699	1.2402	.1	16	20	
tert butyl alcohol	.04723	.04339	.05	8	20	F
Diisopropyl Ether	2.1392	1.9546	.01	9	20	
1,1-dichloroethane	1.3154	1.3270	.2	-1	20	
Halothane	.59755	.5975	.05	0	20	
Ethyl-Tert-Butyl-Ether	1.7804	1.5617	.05	12	20	
vinyl acetate	.90152	.87383	.05	3	20	
cis-1,2-dichloroethene	.80117	.83182	.1	-4	20	
2,2-dichloropropane	.94597	.9617	.05	-2	20	
bromochloromethane	.36128	.36206	.05	0	20	
chloroform	1.2929	1.2925	.2	0	20	
carbontetrachloride	.77189	.85316	.1	-11	20	
ethyl acetate	.37533	.38095	.05	-1	20	
1,1,1-trichloroethane	1.0634	1.0882	.1	-2	20	
1,1-dichloropropene	1.0239	1.0594	.05	-3	20	
2-butanone	.16313	.17022	.1	-4	20	
benzene	2.9734	3.0077	.5	-1	20	
Tertiary-Amyl Methyl Ether	1.5240	1.3686	.05	10	20	
tetrahydrofuran	.14127	.13053	.05	8	20	
1,2-dichloroethane	.8022	.77093	.1	4	20	
trichloroethene	.79254	.76843	.2	3	20	
dibromomethane	.37938	.34713	.05	9	20	

FORM VII MCP-8260-10

7A
CONTINUING CALIBRATION CHECK

Lab Name: Alpha Analytical Labs

SDG No.: L1014045

Instrument ID: Jack.i Calibration Date: 14-SEP-2010 Time: 08:06

Lab File ID: 0914A05.D Init. Calib. Date(s): 03-SEP-2 03-SEP-2

Sample No: 8260 CCAL Init. Calib. Times : 12:12 15:59

Compound	RRF	RRF	MIN RRF	%D	MAX %D	
1,2-dichloropropane	.71939	.70291	.1	2	20	
bromodichloromethane	.81553	.85014	.2	-4	20	
1,4-dioxane	.00341	.00339	.05	1	20	F
2-chloroethylvinyl ether	.29055	.28766	.05	1	20	
cis-1,3-dichloropropene	.95367	.8139	.2	15	20	
toluene	2.3151	2.2172	.4	4	20	
tetrachloroethene	1.0973	1.0603	.2	3	20	
4-methyl-2-pentanone	.1381	.13967	.1	-1	20	
trans-1,3-dichloropropene	.85811	.76175	.1	11	20	
1,1,2-trichloroethane	.46676	.44752	.1	4	20	
chlorodibromomethane	.59904	.58929	.1	2	20	
1,3-dichloropropane	.98175	.94546	.05	4	20	
1,2-dibromoethane	.53655	.51747	.1	4	20	
2-hexanone	.27606	.2688	.1	3	20	
chlorobenzene	2.5659	2.3827	.5	7	20	
ethyl benzene	4.4231	4.3769	.1	1	20	
1,1,1,2-tetrachloroethane	.62787	.71508	.05	-14	20	
p/m xylene	1.8665	1.7997	.1	4	20	
o xylene	1.7840	1.7178	.3	4	20	
bromoform	100	104	.1	-4	20	
styrene	2.9896	2.8775	.3	4	20	
isopropylbenzene	4.4634	4.4604	.1	0	20	
bromobenzene	1.7927	1.7004	.05	5	20	
n-propylbenzene	8.0394	7.8549	.05	2	20	
1,1,2,2,-tetrachloroethane	1.0034	.99618	.3	1	20	
2-chlorotoluene	5.6034	5.3783	.05	4	20	
1,2,3-trichloropropane	.85056	.78711	.05	7	20	
1,3,5-trimethybenzene	5.6664	5.3679	.05	5	20	
trans-1,4-dichloro-2-butene	.1412	.23427	.05	-66	20	F
4-chorotoluene	4.9535	4.8645	.05	2	20	
tert-butylbenzene	4.8490	4.6208	.05	5	20	
1,2,4-trimethylbenzene	5.7289	5.5170	.05	4	20	
sec-butylbenzene	6.7149	6.5704	.01	2	20	
p-isopropyltoluene	5.6691	5.4789	.05	3	20	
1,3-dichlorobenzene	3.5764	3.3765	.6	6	20	
1,4-dichlorobenzene	3.5629	3.4151	.5	4	20	
n-butylbenzene	4.4904	4.4960	.05	0	20	
1,2-dichlorobenzene	3.1552	3.0388	.4	4	20	

FORM VII MCP-8260-10

7A
CONTINUING CALIBRATION CHECK

Lab Name: Alpha Analytical Labs

SDG No.: L1014045

Instrument ID: Jack.i Calibration Date: 14-SEP-2010 Time: 08:06

Lab File ID: 0914A05.D Init. Calib. Date(s): 03-SEP-2 03-SEP-2

Sample No: 8260 CCAL Init. Calib. Times : 12:12 15:59

Compound	$\overline{RRF}$	RRF	MIN RRF	%D	MAX %D
1,2-dibromo-3-chloropropane	.13046	.12473	.05	4	20
hexachlorobutadiene	.63463	.62173	.05	2	20
1,2,4-trichlorobenzene	1.7182	1.5072	.2	12	20
naphthalene	2.7586	2.2525	.05	18	20
1,2,3-trichlorobenzene	1.3080	1.1227	.05	14	20
dibromofluoromethane	.27328	.25767	.05	6	20
1,2-dichloroethane-d4	.26968	.24437	.05	9	20
toluene-d8	1.2036	1.1985	.01	0	20
4-bromofluorobenzene	.73268	.7102	.05	3	20

FORM VII MCP-8260-10

7A
CONTINUING CALIBRATION CHECK

Lab Name: Alpha Analytical Labs

SDG No.: L1014045

Instrument ID: Jack.i Calibration Date: 13-SEP-2010 Time: 08:27

Lab File ID: 0913A02.D Init. Calib. Date(s): 03-SEP-2 03-SEP-2

Sample No: 8260 CCAL Init. Calib. Times : 12:28 16:15

Compound	RRF	RRF	MIN RRF	%D	MAX %D	
dichlorodifluoromethane	.65583	.52947	.1	19	20	
chloromethane	.89391	.80499	.1	10	20	
vinyl chloride	.9952	.82182	.1	17	20	
bromomethane	.76906	.64394	.1	16	20	
chloroethane	.58279	.39742	.1	32	20	F
trichlorofluoromethane	1.4093	1.2235	.1	13	20	
ethyl ether	.38128	.30711	.05	19	20	
1,1,-dichloroethene	.88486	.73148	.1	17	20	
carbon disulfide	2.3952	1.6365	.05	32	20	F
freon-113	.9084	.89868	.1	1	20	
iodomethane	1.1077	.55078	.05	50	20	F
acrolien	.03214	.05944	.05	-85	20	F
methylene chloride	.67906	.67281	.05	1	20	
acetone	.0992	.10337	.1	-4	20	F
trans-1,2-dichloroethene	.70504	.67254	.1	5	20	
methyl acetate	.26355	.31964	.1	-21	20	F
methyl tert butyl ether	1.2488	1.0875	.1	13	20	
tert butyl alcohol	.03959	.03588	.05	9	20	F
Diisopropyl Ether	1.7964	1.5796	.05	12	20	
1,1-dichloroethane	1.2229	1.2035	.2	2	20	
halothane	.55826	.48955	.05	12	20	
Ethyl-Tert-Butyl-Ether	1.4776	1.2516	.05	15	20	
vinyl acetate	100	92.859	.05	7	20	
cis-1,2-dichloroethene	.74679	.74673	.1	0	20	
2,2-dichloropropane	.87026	.86436	.05	1	20	
bromochloromethane	.34163	.31683	.05	7	20	
chloroform	1.2242	1.1584	.2	5	20	
carbontetrachloride	.6615	.73555	.1	-11	20	
tetrahydrofuran	.12367	.13383	.05	-8	20	
1,1,1-trichloroethane	.99818	.97375	.1	2	20	
1,1-dichloropropene	.94067	.89273	.05	5	20	
2-butanone	.14128	.15348	.1	-9	20	
benzene	2.6797	2.5553	.5	5	20	
Tertiary-Amyl Methyl Ether	1.1926	1.0655	.05	11	20	
1,2-dichloroethane	.73579	.68981	.1	6	20	
trichloroethene	.70864	.64205	.2	9	20	
dibromomethane	.35836	.32013	.05	11	20	
1,2-dichloropropane	.62676	.58949	.1	6	20	

FORM VII MCP-8260-10

7A
CONTINUING CALIBRATION CHECK

Lab Name: Alpha Analytical Labs

SDG No.: L1014045

Instrument ID: Jack.i Calibration Date: 13-SEP-2010 Time: 08:27

Lab File ID: 0913A02.D Init. Calib. Date(s): 03-SEP-2 03-SEP-2

Sample No: 8260 CCAL Init. Calib. Times : 12:28 16:15

Compound	RRF	RRF	MIN RRF	%D	MAX %D	
bromodichloromethane	.73256	.77601	.2	-6	20	
1,4-dioxane	.00297	.00322	.05	-8	20	F
2-chloroethylvinyl ether	.25659	.24501	.05	5	20	
cis-1,3-dichloropropene	.85148	.72619	.2	15	20	
toluene	2.0742	1.9024	.4	8	20	
tetrachloroethene	.98354	.92014	.2	6	20	
4-methyl-2-pentanone	.10255	.1059	.1	-3	20	
trans-1,3-dichloropropene	.74729	.73669	.1	1	20	
1,1,2-trichloroethane	.41806	.39202	.1	6	20	
chlorodibromomethane	.52762	.54833	.1	-4	20	
1,3-dichloropropane	.90325	.85656	.05	5	20	
1,2-dibromoethane	.49749	.47761	.1	4	20	
2-hexanone	.2136	.233	.1	-9	20	
chlorobenzene	2.3166	2.0807	.5	10	20	
ethyl benzene	4.0321	3.8723	.1	4	20	
1,1,1,2-tetrachloroethane	100	103	.05	-3	20	
p/m xylene	1.7282	1.5868	.1	8	20	
o xylene	1.6354	1.4696	.3	10	20	
bromoform	100	111	.1	-11	20	
styrene	2.6821	2.4995	.3	7	20	
isopropylbenzene	4.0470	3.9592	.1	2	20	
bromobenzene	1.5669	1.4125	.05	10	20	
n-propylbenzene	7.2891	6.8147	.05	7	20	
1,1,2,2,-tetrachloroethane	.85429	.85166	.3	0	20	
2-chlorotoluene	4.9352	4.4124	.05	11	20	
1,2,3-trichloropropane	.72438	.72334	.05	0	20	
trans-1,4-dichloro-2-butene	.22258	.19828	.05	11	20	
4-chorotoluene	4.4385	3.9695	.05	11	20	
tert-butylbenzene	4.3697	3.982	.05	9	20	
1,2,4-trimethylbenzene	5.1738	4.6908	.05	9	20	
1,3,5-trimethybenzene	6.2556	5.8104	.05	7	20	
sec-butylbenzene	6.2556	5.8104	.05	7	20	
p-isopropyltoluene	5.2224	4.9027	.05	6	20	
1,3-dichlorobenzene	3.2167	2.8905	.6	10	20	
1,4-dichlorobenzene	3.2053	2.9135	.5	9	20	
n-butylbenzene	4.3185	4.0338	.05	7	20	
1,2-dichlorobenzene	2.8459	2.5652	.4	10	20	
1,2-dibromo-3-chloropropane	.11955	.12761	.05	-7	20	

FORM VII MCP-8260-10

7A
CONTINUING CALIBRATION CHECK

Lab Name: Alpha Analytical Labs

SDG No.: L1014045

Instrument ID: Jack.i Calibration Date: 13-SEP-2010 Time: 08:27

Lab File ID: 0913A02.D Init. Calib. Date(s): 03-SEP-2 03-SEP-2

Sample No: 8260 CCAL Init. Calib. Times : 12:28 16:15

Compound	$\overline{RRF}$	RRF	MIN RRF	%D	MAX %D
1,2,4-trichlorobenzene	1.7181	1.5113	.2	12	20
hexachlorobutadiene	.69606	.61186	.05	12	20
naphthalene	2.7957	2.5778	.05	8	20
1,2,3-trichlorobenzene	1.3763	1.2483	.05	9	20
dibromofluoromethane	.27969	.27055	.05	3	20
1,2-dichloroethane-d4	.27212	.26689	.05	2	20
toluene-d8	1.2032	1.2061	.05	0	20
4-bromofluorobenzene	.70887	.70289	.05	1	20

FORM VII MCP-8260-10

7A
CONTINUING CALIBRATION CHECK

Lab Name: Alpha Analytical Labs

SDG No.: L1014045

Instrument ID: Jack.i Calibration Date: 13-SEP-2010 Time: 08:11

Lab File ID: 0913A01.D Init. Calib. Date(s): 03-SEP-2 03-SEP-2

Sample No: 8260 CCAL Init. Calib. Times : 12:12 15:59

Compound	___ RRF	RRF	MIN RRF	%D	MAX %D	
dichlorodifluoromethane	.68646	.58976	.1	14	20	
chloromethane	.78155	.8386	.1	-7	20	
vinyl chloride	1.0685	.93418	.1	13	20	
bromomethane	.57544	.53583	.1	7	20	
chloroethane	.64096	.47802	.1	25	20	F
trichlorofluoromethane	1.5116	1.4285	.1	5	20	
ethyl ether	.42693	.31806	.05	26	20	F
1,1,-dichloroethene	.94941	.84591	.1	11	20	
carbon disulfide	2.6401	2.0140	.1	24	20	F
freon-113	.99642	1.0290	.1	-3	20	
iodomethane	100	73.860	.05	26	20	F
acrolien	.0374	.05424	.05	-45	20	F
methylene chloride	.72789	.74305	.1	-2	20	
acetone	.10251	.09747	.1	5	20	
trans-1,2-dichloroethene	.76338	.7748	.1	-1	20	
methyl acetate	.27941	.28142	.1	-1	20	
methyl tert butyl ether	1.4699	1.1475	.1	22	20	F
tert butyl alcohol	.04723	.0444	.05	6	20	F
Diisopropyl Ether	2.1392	1.9484	.01	9	20	
1,1-dichloroethane	1.3154	1.4230	.2	-8	20	
Halothane	.59755	.55625	.05	7	20	
Ethyl-Tert-Butyl-Ether	1.7804	1.5101	.05	15	20	
vinyl acetate	.90152	.78562	.05	13	20	
cis-1,2-dichloroethene	.80117	.83381	.1	-4	20	
2,2-dichloropropane	.94597	1.0445	.05	-10	20	
bromochloromethane	.36128	.34064	.05	6	20	
chloroform	1.2929	1.3031	.2	-1	20	
carbontetrachloride	.77189	.86609	.1	-12	20	
ethyl acetate	.37533	.33393	.05	11	20	
1,1,1-trichloroethane	1.0634	1.1346	.1	-7	20	
1,1-dichloropropene	1.0239	1.0599	.05	-4	20	
2-butanone	.16313	.14279	.1	12	20	
benzene	2.9734	3.0397	.5	-2	20	
Tertiary-Amyl Methyl Ether	1.5240	1.2852	.05	16	20	
tetrahydrofuran	.14127	.12252	.05	13	20	
1,2-dichloroethane	.8022	.74267	.1	7	20	
trichloroethene	.79254	.80748	.2	-2	20	
dibromomethane	.37938	.32127	.05	15	20	

FORM VII MCP-8260-10

7A
CONTINUING CALIBRATION CHECK

Lab Name: Alpha Analytical Labs

SDG No.: L1014045

Instrument ID: Jack.i Calibration Date: 13-SEP-2010 Time: 08:11

Lab File ID: 0913A01.D Init. Calib. Date(s): 03-SEP-2 03-SEP-2

Sample No: 8260 CCAL Init. Calib. Times : 12:12 15:59

Compound	RRF	RRF	MIN RRF	%D	MAX %D	
1,2-dichloropropane	.71939	.72018	.1	0	20	
bromodichloromethane	.81553	.85614	.2	-5	20	
1,4-dioxane	.00341	.00337	.05	1	20	F
2-chloroethylvinyl ether	.29055	.24929	.05	14	20	
cis-1,3-dichloropropene	.95367	.82648	.2	13	20	
toluene	2.3151	2.3206	.4	0	20	
tetrachloroethene	1.0973	1.1226	.2	-2	20	
4-methyl-2-pentanone	.1381	.11768	.1	15	20	
trans-1,3-dichloropropene	.85811	.83196	.1	3	20	
1,1,2-trichloroethane	.46676	.43334	.1	7	20	
chlorodibromomethane	.59904	.59398	.1	1	20	
1,3-dichloropropane	.98175	.92639	.05	6	20	
1,2-dibromoethane	.53655	.49076	.1	9	20	
2-hexanone	.27606	.23955	.1	13	20	
chlorobenzene	2.5659	2.4816	.5	3	20	
ethyl benzene	4.4231	4.6762	.1	-6	20	
1,1,1,2-tetrachloroethane	.62787	.74066	.05	-18	20	
p/m xylene	1.8665	1.9137	.1	-3	20	
o xylene	1.7840	1.7520	.3	2	20	
bromoform	100	107	.1	-7	20	
styrene	2.9896	2.8972	.3	3	20	
isopropylbenzene	4.4634	4.7162	.1	-6	20	
bromobenzene	1.7927	1.8058	.05	-1	20	
n-propylbenzene	8.0394	8.7775	.05	-9	20	
1,1,2,2,-tetrachloroethane	1.0034	.96372	.3	4	20	
2-chlorotoluene	5.6034	5.8258	.05	-4	20	
1,2,3-trichloropropane	.85056	.7615	.05	10	20	
1,3,5-trimethybenzene	5.6664	5.9402	.05	-5	20	
trans-1,4-dichloro-2-butene	.1412	.1503	.05	-6	20	
4-chorotoluene	4.9535	5.2116	.05	-5	20	
tert-butylbenzene	4.8490	5.1774	.05	-7	20	
1,2,4-trimethylbenzene	5.7289	5.9669	.05	-4	20	
sec-butylbenzene	6.7149	7.4177	.01	-10	20	
p-isopropyltoluene	5.6691	6.1973	.05	-9	20	
1,3-dichlorobenzene	3.5764	3.6081	.6	-1	20	
1,4-dichlorobenzene	3.5629	3.5991	.5	-1	20	
n-butylbenzene	4.4904	5.0200	.05	-12	20	
1,2-dichlorobenzene	3.1552	3.0605	.4	3	20	

FORM VII MCP-8260-10

7A
CONTINUING CALIBRATION CHECK

Lab Name: Alpha Analytical Labs

SDG No.: L1014045

Instrument ID: Jack.i Calibration Date: 13-SEP-2010 Time: 08:11

Lab File ID: 0913A01.D Init. Calib. Date(s): 03-SEP-2 03-SEP-2

Sample No: 8260 CCAL Init. Calib. Times : 12:12 15:59

Compound	___ RRF	RRF	MIN RRF	%D	MAX %D	
1,2-dibromo-3-chloropropane	.13046	.115	.05	12	20	
hexachlorobutadiene	.63463	.69969	.05	-10	20	
1,2,4-trichlorobenzene	1.7182	1.5149	.2	12	20	
naphthalene	2.7586	2.1051	.05	24	20	F
1,2,3-trichlorobenzene	1.3080	1.0926	.05	16	20	
dibromofluoromethane	.27328	.25711	.05	6	20	
1,2-dichloroethane-d4	.26968	.24167	.05	10	20	
toluene-d8	1.2036	1.2254	.01	-2	20	
4-bromofluorobenzene	.73268	.76531	.05	-4	20	

FORM VII MCP-8260-10

7A
CONTINUING CALIBRATION CHECK

Lab Name: Alpha Analytical Labs

SDG No.: L1014045

Instrument ID: Jack.i Calibration Date: 15-SEP-2010 Time: 08:22

Lab File ID: 0915A05.D Init. Calib. Date(s): 03-SEP-2 03-SEP-2

Sample No: 8260 CCAL Init. Calib. Times : 12:12 15:59

Compound	RRF	RRF	MIN RRF	%D	MAX %D	
dichlorodifluoromethane	.68646	.59111	.1	14	20	
chloromethane	.78155	.72566	.1	7	20	
vinyl chloride	1.0685	.93021	.1	13	20	
bromomethane	.57544	.49914	.1	13	20	
chloroethane	.64096	.47317	.1	26	20	F
trichlorofluoromethane	1.5116	1.4252	.1	6	20	
ethyl ether	.42693	.38081	.05	11	20	
1,1,-dichloroethene	.94941	.82249	.1	13	20	
carbon disulfide	2.6401	1.8087	.1	31	20	F
freon-113	.99642	1.0027	.1	-1	20	
iodomethane	100	64.897	.05	35	20	F
acrolien	.0374	.05812	.05	-55	20	F
methylene chloride	.72789	.74323	.1	-2	20	
acetone	.10251	.0992	.1	3	20	
trans-1,2-dichloroethene	.76338	.71343	.1	7	20	
methyl acetate	.27941	.29475	.1	-5	20	
methyl tert butyl ether	1.4699	1.3109	.1	11	20	
tert butyl alcohol	.04723	.04422	.05	6	20	F
Diisopropyl Ether	2.1392	2.0099	.01	6	20	
1,1-dichloroethane	1.3154	1.2570	.2	4	20	
Halothane	.59755	.54741	.05	8	20	
Ethyl-Tert-Butyl-Ether	1.7804	1.6203	.05	9	20	
vinyl acetate	.90152	.82214	.05	9	20	
cis-1,2-dichloroethene	.80117	.79652	.1	1	20	
2,2-dichloropropane	.94597	.89991	.05	5	20	
bromochloromethane	.36128	.34786	.05	4	20	
chloroform	1.2929	1.2134	.2	6	20	
carbontetrachloride	.77189	.80251	.1	-4	20	
ethyl acetate	.37533	.3733	.05	1	20	
1,1,1-trichloroethane	1.0634	1.0001	.1	6	20	
1,1-dichloropropene	1.0239	.95907	.05	6	20	
2-butanone	.16313	.17245	.1	-6	20	
benzene	2.9734	2.7794	.5	7	20	
Tertiary-Amyl Methyl Ether	1.5240	1.4196	.05	7	20	
tetrahydrofuran	.14127	.13468	.05	5	20	
1,2-dichloroethane	.8022	.72781	.1	9	20	
trichloroethene	.79254	.70321	.2	11	20	
dibromomethane	.37938	.37681	.05	1	20	

FORM VII MCP-8260-10

7A
CONTINUING CALIBRATION CHECK

Lab Name: Alpha Analytical Labs

SDG No.: L1014045

Instrument ID: Jack.i Calibration Date: 15-SEP-2010 Time: 08:22

Lab File ID: 0915A05.D Init. Calib. Date(s): 03-SEP-2 03-SEP-2

Sample No: 8260 CCAL Init. Calib. Times : 12:12 15:59

Compound	RRF	RRF	MIN RRF	%D	MAX %D	
1,2-dichloropropane	.71939	.6898	.1	4	20	
bromodichloromethane	.81553	.80012	.2	2	20	
1,4-dioxane	.00341	.00299	.05	13	20	F
2-chloroethylvinyl ether	.29055	.27636	.05	5	20	
cis-1,3-dichloropropene	.95367	.7763	.2	19	20	
toluene	2.3151	2.0610	.4	11	20	
tetrachloroethene	1.0973	.97313	.2	11	20	
4-methyl-2-pentanone	.1381	.13087	.1	5	20	
trans-1,3-dichloropropene	.85811	.76393	.1	11	20	
1,1,2-trichloroethane	.46676	.41896	.1	10	20	
chlorodibromomethane	.59904	.59026	.1	1	20	
1,3-dichloropropane	.98175	.89523	.05	9	20	
1,2-dibromoethane	.53655	.48378	.1	10	20	
2-hexanone	.27606	.24815	.1	10	20	
chlorobenzene	2.5659	2.2393	.5	13	20	
ethyl benzene	4.4231	4.1362	.1	6	20	
1,1,1,2-tetrachloroethane	.62787	.71342	.05	-14	20	
p/m xylene	1.8665	1.6700	.1	11	20	
o xylene	1.7840	1.7133	.3	4	20	
bromoform	100	101	.1	-1	20	
styrene	2.9896	2.8637	.3	4	20	
isopropylbenzene	4.4634	4.0308	.1	10	20	
bromobenzene	1.7927	1.6114	.05	10	20	
n-propylbenzene	8.0394	7.0800	.05	12	20	
1,1,2,2,-tetrachloroethane	1.0034	.91511	.3	9	20	
2-chlorotoluene	5.6034	4.8842	.05	13	20	
1,2,3-trichloropropane	.85056	.74026	.05	13	20	
1,3,5-trimethybenzene	5.6664	4.8907	.05	14	20	
trans-1,4-dichloro-2-butene	.1412	.24529	.05	-74	20	F
4-chorotoluene	4.9535	4.4275	.05	11	20	
tert-butylbenzene	4.8490	4.1484	.05	14	20	
1,2,4-trimethylbenzene	5.7289	5.0931	.05	11	20	
sec-butylbenzene	6.7149	5.6832	.01	15	20	
p-isopropyltoluene	5.6691	4.9364	.05	13	20	
1,3-dichlorobenzene	3.5764	3.2102	.6	10	20	
1,4-dichlorobenzene	3.5629	3.2159	.5	10	20	
n-butylbenzene	4.4904	3.8572	.05	14	20	
1,2-dichlorobenzene	3.1552	2.8095	.4	11	20	

FORM VII MCP-8260-10

7A
CONTINUING CALIBRATION CHECK

Lab Name: Alpha Analytical Labs

SDG No.: L1014045

Instrument ID: Jack.i Calibration Date: 15-SEP-2010 Time: 08:22

Lab File ID: 0915A05.D Init. Calib. Date(s): 03-SEP-2 03-SEP-2

Sample No: 8260 CCAL Init. Calib. Times : 12:12 15:59

Compound	$\overline{RRF}$	RRF	MIN RRF	%D	MAX %D	
1,2-dibromo-3-chloropropane	.13046	.12105	.05	7	20	
hexachlorobutadiene	.63463	.54249	.05	15	20	
1,2,4-trichlorobenzene	1.7182	1.3920	.2	19	20	
naphthalene	2.7586	2.0593	.05	25	20	F
1,2,3-trichlorobenzene	1.3080	1.024	.05	22	20	F
dibromofluoromethane	.27328	.26292	.05	4	20	
1,2-dichloroethane-d4	.26968	.24518	.05	9	20	
toluene-d8	1.2036	1.2088	.01	0	20	
4-bromofluorobenzene	.73268	.72622	.05	1	20	

FORM VII MCP-8260-10

ANALYTICAL REPORT

Lab Number:	L1014330
Client:	TRC Environmental Consultants Wannalancit Mills 650 Suffolk Street Lowell, MA 01854
ATTN:	David Sullivan
Phone:	(978) 656-3565
Project Name:	CITY OF NEW BEDFORD
Project Number:	115058
Report Date:	09/22/10

Certifications & Approvals: MA (M-MA086), NY NELAC (11148), CT (PH-0574), NH (2003), NJ (MA935), RI (LAO00065), ME (MA0086), PA (Registration #68-03671), USDA (Permit #S-72578), US Army Corps of Engineers, Naval FESC.

Eight Walkup Drive, Westborough, MA 01581-1019
508-898-9220 (Fax) 508-898-9193 800-624-9220 - www.alphalab.com

Project Name: CITY OF NEW BEDFORD
Project Number: 115058

Lab Number: L1014330
Report Date: 09/22/10

Alpha Sample ID	Client ID	Sample Location	Collection Date/Time
L1014330-01	MW-22	NBHS	09/13/10 11:10
L1014330-02	MW-23	NBHS	09/13/10 10:45
L1014330-03	MW-21	NBHS	09/13/10 13:10
L1014330-04	MW-11	NBHS	09/13/10 13:25
L1014330-05	MW-18	NBHS	09/13/10 15:10
L1014330-06	MW-4	NBHS	09/13/10 17:00
L1014330-07	TRIP BLANK	NBHS	09/13/10 00:00

Project Name: CITY OF NEW BEDFORD **Lab Number:** L1014330

Project Number: 115058 **Report Date:** 09/22/10

MADEP MCP Response Action Analytical Report Certification

This form provides certifications for all samples performed by MCP methods. Please refer to the Sample Results and Container Information sections of this report for specification of MCP methods used for each analysis. The following questions pertain only to MCP Analytical Methods.

An affirmative response to questions A through F is required for "Presumptive Certainty" status		
A	Were all samples received in a condition consistent with those described on the Chain-of-Custody, properly preserved (including temperature) in the field or laboratory, and prepared/analyzed within method holding times?	YES
B	Were the analytical method(s) and all associated QC requirements specified in the selected CAM protocol(s) followed?	YES
C	Were all required corrective actions and analytical response actions specified in the selected CAM protocol(s) implemented for all identified performance standard non-conformances?	YES
D	Does the laboratory report comply with all the reporting requirements specified in CAM VII A, "Quality Assurance and Quality Control Guidelines for the Acquisition and Reporting of Analytical Data?"	YES
E a.	VPH, EPH, and APH Methods only: Was each method conducted without significant modification(s)? (Refer to the individual method(s) for a list of significant modifications).	N/A
E b.	APH and TO-15 Methods only: Was the complete analyte list reported for each method?	N/A
F	Were all applicable CAM protocol QC and performance standard non-conformances identified and evaluated in a laboratory narrative (including all "No" responses to Questions A through E)?	YES

A response to questions G, H and I is required for "Presumptive Certainty" status		
G	Were the reporting limits at or below all CAM reporting limits specified in the selected CAM protocol(s)?	NO
H	Were all QC performance standards specified in the CAM protocol(s) achieved?	NO
I	Were results reported for the complete analyte list specified in the selected CAM protocol(s)?	YES

For any questions answered "No", please refer to the case narrative section on the following page(s).

Please note that sample matrix information is located in the Sample Results section of this report.

Project Name: CITY OF NEW BEDFORD **Lab Number:** L1014330
Project Number: 115058 **Report Date:** 09/22/10

Case Narrative

The samples were received in accordance with the Chain of Custody and no significant deviations were encountered during the preparation or analysis unless otherwise noted. Sample Receipt, Container Information, and the Chain of Custody are located at the back of the report.

Results contained within this report relate only to the samples submitted under this Alpha Lab Number and meet all of the requirements of NELAC, for all NELAC accredited parameters. The data presented in this report is organized by parameter (i.e. VOC, SVOC, etc.). Sample specific Quality Control data (i.e. Surrogate Spike Recovery) is reported at the end of the target analyte list for each individual sample, followed by the Laboratory Batch Quality Control at the end of each parameter. If a sample was re-analyzed or re-extracted due to a required quality control corrective action and if both sets of data are reported, the Laboratory ID of the re-analysis or re-extraction is designated with an "R" or "RE", respectively. When multiple Batch Quality Control elements are reported (e.g. more than one LCS), the associated samples for each element are noted in the grey shaded header line of each data table. Any Laboratory Batch, Sample Specific % recovery or RPD value that is outside the listed Acceptance Criteria is bolded in the report. Definitions of all data qualifiers and acronyms used in this report are provided in the Glossary located at the back of the report.

Please see the associated ADEx data file for a comparison of laboratory reporting limits that were achieved with the regulatory Numerical Standards requested on the Chain of Custody.

For additional information, please contact Client Services at 800-624-9220.

MCP Related Narratives

Volatile Organics

In reference to question G:

The requested CAM reporting limit was not achieved for Tetrahydrofuran.

In reference to question H:

The WG432715-2 LCSD recovery, associated with L1014330-01 through -07, is below the individual acceptance criteria for Carbon disulfide (64%), but within the overall method allowances. The results of the associated samples are reported; however, all results are considered to have a potentially low bias for this compound.

The WG432715-1/-2 LCS/LCSD RPDs, associated with L1014330-01 through -07, are above the acceptance criteria for Acetone (22%) and 2-Butanone (21%); however, the individual LCS/LCSD recoveries are within method limits.

Project Name: CITY OF NEW BEDFORD **Lab Number:** L1014330
Project Number: 115058 **Report Date:** 09/22/10

Case Narrative (continued)

The initial calibration, associated with L1014330-01 through -07, did not meet the method required minimum response factors for Acetone and 1,4-Dioxane and utilized a quadratic fit for Bromoform.
The continuing calibration standard, associated with L1014330-01 through -07, is outside the acceptance criteria for several compounds; however, it is within overall method allowances. A copy of the continuing calibration standard is included as an addendum to this report.

I, the undersigned, attest under the pains and penalties of perjury that, to the best of my knowledge and belief and based upon my personal inquiry of those responsible for providing the information contained in this analytical report, such information is accurate and complete. This certificate of analysis is not complete unless this page accompanies any and all pages of this report.

Authorized Signature: Kelly Stenstrom

Title: Technical Director/Representative Date: 09/22/10

ORGANICS

VOLATILES

Project Name: CITY OF NEW BEDFORD **Lab Number:** L1014330

Project Number: 115058 **Report Date:** 09/22/10

SAMPLE RESULTS

Lab ID:	L1014330-01	Date Collected:	09/13/10 11:10
Client ID:	MW-22	Date Received:	09/15/10
Sample Location:	NBHS	Field Prep:	Not Specified
Matrix:	Water		
Analytical Method:	97,8260B		
Analytical Date:	09/16/10 11:18		
Analyst:	MM		

Parameter	Result	Qualifier	Units	RL	MDL	Dilution Factor
MCP Volatile Organics - Westborough Lab						
Methylene chloride	ND		ug/l	2.0	--	1
1,1-Dichloroethane	ND		ug/l	1.0	--	1
Chloroform	ND		ug/l	1.0	--	1
Carbon tetrachloride	ND		ug/l	1.0	--	1
1,2-Dichloropropane	ND		ug/l	1.0	--	1
Dibromochloromethane	ND		ug/l	1.0	--	1
1,1,2-Trichloroethane	ND		ug/l	1.0	--	1
Tetrachloroethene	ND		ug/l	1.0	--	1
Chlorobenzene	ND		ug/l	1.0	--	1
Trichlorofluoromethane	ND		ug/l	2.0	--	1
1,2-Dichloroethane	ND		ug/l	1.0	--	1
1,1,1-Trichloroethane	ND		ug/l	1.0	--	1
Bromodichloromethane	ND		ug/l	1.0	--	1
trans-1,3-Dichloropropene	ND		ug/l	0.50	--	1
cis-1,3-Dichloropropene	ND		ug/l	0.50	--	1
1,1-Dichloropropene	ND		ug/l	2.0	--	1
Bromoform	ND		ug/l	2.0	--	1
1,1,2,2-Tetrachloroethane	ND		ug/l	1.0	--	1
Benzene	ND		ug/l	1.0	--	1
Toluene	ND		ug/l	1.0	--	1
Ethylbenzene	ND		ug/l	1.0	--	1
Chloromethane	ND		ug/l	2.0	--	1
Bromomethane	ND		ug/l	2.0	--	1
Vinyl chloride	ND		ug/l	1.0	--	1
Chloroethane	ND		ug/l	2.0	--	1
1,1-Dichloroethene	ND		ug/l	1.0	--	1
trans-1,2-Dichloroethene	ND		ug/l	1.0	--	1
Trichloroethene	ND		ug/l	1.0	--	1
1,2-Dichlorobenzene	ND		ug/l	1.0	--	1
1,3-Dichlorobenzene	ND		ug/l	1.0	--	1

Project Name: CITY OF NEW BEDFORD **Lab Number:** L1014330

Project Number: 115058 **Report Date:** 09/22/10

SAMPLE RESULTS

Lab ID: L1014330-01 Date Collected: 09/13/10 11:10

Client ID: MW-22 Date Received: 09/15/10

Sample Location: NBHS Field Prep: Not Specified

Parameter	Result	Qualifier	Units	RL	MDL	Dilution Factor
MCP Volatile Organics - Westborough Lab						
1,4-Dichlorobenzene	ND		ug/l	1.0	--	1
Methyl tert butyl ether	ND		ug/l	2.0	--	1
p/m-Xylene	ND		ug/l	2.0	--	1
o-Xylene	ND		ug/l	1.0	--	1
cis-1,2-Dichloroethene	ND		ug/l	1.0	--	1
Dibromomethane	ND		ug/l	2.0	--	1
1,2,3-Trichloropropane	ND		ug/l	2.0	--	1
Styrene	ND		ug/l	1.0	--	1
Dichlorodifluoromethane	ND		ug/l	2.0	--	1
Acetone	ND		ug/l	5.0	--	1
Carbon disulfide	ND		ug/l	2.0	--	1
2-Butanone	ND		ug/l	5.0	--	1
4-Methyl-2-pentanone	ND		ug/l	5.0	--	1
2-Hexanone	ND		ug/l	5.0	--	1
Bromochloromethane	ND		ug/l	2.0	--	1
Tetrahydrofuran	ND		ug/l	10	--	1
2,2-Dichloropropane	ND		ug/l	2.0	--	1
1,2-Dibromoethane	ND		ug/l	2.0	--	1
1,3-Dichloropropane	ND		ug/l	2.0	--	1
1,1,1,2-Tetrachloroethane	ND		ug/l	1.0	--	1
Bromobenzene	ND		ug/l	2.0	--	1
n-Butylbenzene	ND		ug/l	2.0	--	1
sec-Butylbenzene	ND		ug/l	2.0	--	1
tert-Butylbenzene	ND		ug/l	2.0	--	1
o-Chlorotoluene	ND		ug/l	2.0	--	1
p-Chlorotoluene	ND		ug/l	2.0	--	1
1,2-Dibromo-3-chloropropane	ND		ug/l	2.0	--	1
Hexachlorobutadiene	ND		ug/l	0.60	--	1
Isopropylbenzene	ND		ug/l	2.0	--	1
p-Isopropyltoluene	ND		ug/l	2.0	--	1
Naphthalene	ND		ug/l	2.0	--	1
n-Propylbenzene	ND		ug/l	2.0	--	1
1,2,3-Trichlorobenzene	ND		ug/l	2.0	--	1
1,2,4-Trichlorobenzene	ND		ug/l	2.0	--	1
1,3,5-Trimethylbenzene	ND		ug/l	2.0	--	1
1,2,4-Trimethylbenzene	ND		ug/l	2.0	--	1
Ethyl ether	ND		ug/l	2.0	--	1

Project Name: CITY OF NEW BEDFORD **Lab Number:** L1014330

Project Number: 115058 **Report Date:** 09/22/10

SAMPLE RESULTS

Lab ID:	L1014330-01	Date Collected:	09/13/10 11:10
Client ID:	MW-22	Date Received:	09/15/10
Sample Location:	NBHS	Field Prep:	Not Specified

Parameter	Result	Qualifier	Units	RL	MDL	Dilution Factor
MCP Volatile Organics - Westborough Lab						
Isopropyl Ether	ND		ug/l	2.0	--	1
Ethyl-Tert-Butyl-Ether	ND		ug/l	2.0	--	1
Tertiary-Amyl Methyl Ether	ND		ug/l	2.0	--	1
1,4-Dioxane	ND		ug/l	250	--	1

Surrogate	% Recovery	Qualifier	Acceptance Criteria
1,2-Dichloroethane-d4	91		70-130
Toluene-d8	99		70-130
4-Bromofluorobenzene	106		70-130
Dibromofluoromethane	103		70-130

Project Name: CITY OF NEW BEDFORD **Lab Number:** L1014330

Project Number: 115058 **Report Date:** 09/22/10

SAMPLE RESULTS

Lab ID:	L1014330-02	Date Collected:	09/13/10 10:45
Client ID:	MW-23	Date Received:	09/15/10
Sample Location:	NBHS	Field Prep:	Not Specified
Matrix:	Water		
Analytical Method:	97,8260B		
Analytical Date:	09/16/10 11:51		
Analyst:	MM		

Parameter	Result	Qualifier	Units	RL	MDL	Dilution Factor
MCP Volatile Organics - Westborough Lab						
Methylene chloride	ND		ug/l	2.0	--	1
1,1-Dichloroethane	ND		ug/l	1.0	--	1
Chloroform	ND		ug/l	1.0	--	1
Carbon tetrachloride	ND		ug/l	1.0	--	1
1,2-Dichloropropane	ND		ug/l	1.0	--	1
Dibromochloromethane	ND		ug/l	1.0	--	1
1,1,2-Trichloroethane	ND		ug/l	1.0	--	1
Tetrachloroethene	ND		ug/l	1.0	--	1
Chlorobenzene	ND		ug/l	1.0	--	1
Trichlorofluoromethane	ND		ug/l	2.0	--	1
1,2-Dichloroethane	ND		ug/l	1.0	--	1
1,1,1-Trichloroethane	ND		ug/l	1.0	--	1
Bromodichloromethane	ND		ug/l	1.0	--	1
trans-1,3-Dichloropropene	ND		ug/l	0.50	--	1
cis-1,3-Dichloropropene	ND		ug/l	0.50	--	1
1,1-Dichloropropene	ND		ug/l	2.0	--	1
Bromoform	ND		ug/l	2.0	--	1
1,1,2,2-Tetrachloroethane	ND		ug/l	1.0	--	1
Benzene	ND		ug/l	1.0	--	1
Toluene	ND		ug/l	1.0	--	1
Ethylbenzene	ND		ug/l	1.0	--	1
Chloromethane	ND		ug/l	2.0	--	1
Bromomethane	ND		ug/l	2.0	--	1
Vinyl chloride	ND		ug/l	1.0	--	1
Chloroethane	ND		ug/l	2.0	--	1
1,1-Dichloroethene	ND		ug/l	1.0	--	1
trans-1,2-Dichloroethene	ND		ug/l	1.0	--	1
Trichloroethene	ND		ug/l	1.0	--	1
1,2-Dichlorobenzene	ND		ug/l	1.0	--	1
1,3-Dichlorobenzene	ND		ug/l	1.0	--	1

Project Name: CITY OF NEW BEDFORD **Lab Number:** L1014330

Project Number: 115058 **Report Date:** 09/22/10

SAMPLE RESULTS

Lab ID: L1014330-02 Date Collected: 09/13/10 10:45

Client ID: MW-23 Date Received: 09/15/10

Sample Location: NBHS Field Prep: Not Specified

Parameter	Result	Qualifier	Units	RL	MDL	Dilution Factor
MCP Volatile Organics - Westborough Lab						
1,4-Dichlorobenzene	ND		ug/l	1.0	--	1
Methyl tert butyl ether	ND		ug/l	2.0	--	1
p/m-Xylene	ND		ug/l	2.0	--	1
o-Xylene	ND		ug/l	1.0	--	1
cis-1,2-Dichloroethene	ND		ug/l	1.0	--	1
Dibromomethane	ND		ug/l	2.0	--	1
1,2,3-Trichloropropane	ND		ug/l	2.0	--	1
Styrene	ND		ug/l	1.0	--	1
Dichlorodifluoromethane	ND		ug/l	2.0	--	1
Acetone	ND		ug/l	5.0	--	1
Carbon disulfide	ND		ug/l	2.0	--	1
2-Butanone	ND		ug/l	5.0	--	1
4-Methyl-2-pentanone	ND		ug/l	5.0	--	1
2-Hexanone	ND		ug/l	5.0	--	1
Bromochloromethane	ND		ug/l	2.0	--	1
Tetrahydrofuran	ND		ug/l	10	--	1
2,2-Dichloropropane	ND		ug/l	2.0	--	1
1,2-Dibromoethane	ND		ug/l	2.0	--	1
1,3-Dichloropropane	ND		ug/l	2.0	--	1
1,1,1,2-Tetrachloroethane	ND		ug/l	1.0	--	1
Bromobenzene	ND		ug/l	2.0	--	1
n-Butylbenzene	ND		ug/l	2.0	--	1
sec-Butylbenzene	ND		ug/l	2.0	--	1
tert-Butylbenzene	ND		ug/l	2.0	--	1
o-Chlorotoluene	ND		ug/l	2.0	--	1
p-Chlorotoluene	ND		ug/l	2.0	--	1
1,2-Dibromo-3-chloropropane	ND		ug/l	2.0	--	1
Hexachlorobutadiene	ND		ug/l	0.60	--	1
Isopropylbenzene	ND		ug/l	2.0	--	1
p-Isopropyltoluene	ND		ug/l	2.0	--	1
Naphthalene	ND		ug/l	2.0	--	1
n-Propylbenzene	ND		ug/l	2.0	--	1
1,2,3-Trichlorobenzene	ND		ug/l	2.0	--	1
1,2,4-Trichlorobenzene	ND		ug/l	2.0	--	1
1,3,5-Trimethylbenzene	ND		ug/l	2.0	--	1
1,2,4-Trimethylbenzene	ND		ug/l	2.0	--	1
Ethyl ether	ND		ug/l	2.0	--	1

Project Name: CITY OF NEW BEDFORD **Lab Number:** L1014330

Project Number: 115058 **Report Date:** 09/22/10

SAMPLE RESULTS

Lab ID:	L1014330-02	Date Collected:	09/13/10 10:45
Client ID:	MW-23	Date Received:	09/15/10
Sample Location:	NBHS	Field Prep:	Not Specified

Parameter	Result	Qualifier	Units	RL	MDL	Dilution Factor
MCP Volatile Organics - Westborough Lab						
Isopropyl Ether	ND		ug/l	2.0	--	1
Ethyl-Tert-Butyl-Ether	ND		ug/l	2.0	--	1
Tertiary-Amyl Methyl Ether	ND		ug/l	2.0	--	1
1,4-Dioxane	ND		ug/l	250	--	1

Surrogate	% Recovery	Qualifier	Acceptance Criteria
1,2-Dichloroethane-d4	97		70-130
Toluene-d8	99		70-130
4-Bromofluorobenzene	108		70-130
Dibromofluoromethane	109		70-130

Project Name: CITY OF NEW BEDFORD **Lab Number:** L1014330

Project Number: 115058 **Report Date:** 09/22/10

SAMPLE RESULTS

Lab ID:	L1014330-03	Date Collected:	09/13/10 13:10
Client ID:	MW-21	Date Received:	09/15/10
Sample Location:	NBHS	Field Prep:	Not Specified
Matrix:	Water		
Analytical Method:	97,8260B		
Analytical Date:	09/16/10 12:23		
Analyst:	MM		

Parameter	Result	Qualifier	Units	RL	MDL	Dilution Factor
MCP Volatile Organics - Westborough Lab						
Methylene chloride	ND		ug/l	2.0	--	1
1,1-Dichloroethane	ND		ug/l	1.0	--	1
Chloroform	ND		ug/l	1.0	--	1
Carbon tetrachloride	ND		ug/l	1.0	--	1
1,2-Dichloropropane	ND		ug/l	1.0	--	1
Dibromochloromethane	ND		ug/l	1.0	--	1
1,1,2-Trichloroethane	ND		ug/l	1.0	--	1
Tetrachloroethene	ND		ug/l	1.0	--	1
Chlorobenzene	ND		ug/l	1.0	--	1
Trichlorofluoromethane	ND		ug/l	2.0	--	1
1,2-Dichloroethane	ND		ug/l	1.0	--	1
1,1,1-Trichloroethane	ND		ug/l	1.0	--	1
Bromodichloromethane	ND		ug/l	1.0	--	1
trans-1,3-Dichloropropene	ND		ug/l	0.50	--	1
cis-1,3-Dichloropropene	ND		ug/l	0.50	--	1
1,1-Dichloropropene	ND		ug/l	2.0	--	1
Bromoform	ND		ug/l	2.0	--	1
1,1,2,2-Tetrachloroethane	ND		ug/l	1.0	--	1
Benzene	ND		ug/l	1.0	--	1
Toluene	ND		ug/l	1.0	--	1
Ethylbenzene	ND		ug/l	1.0	--	1
Chloromethane	ND		ug/l	2.0	--	1
Bromomethane	ND		ug/l	2.0	--	1
Vinyl chloride	ND		ug/l	1.0	--	1
Chloroethane	ND		ug/l	2.0	--	1
1,1-Dichloroethene	ND		ug/l	1.0	--	1
trans-1,2-Dichloroethene	ND		ug/l	1.0	--	1
Trichloroethene	ND		ug/l	1.0	--	1
1,2-Dichlorobenzene	ND		ug/l	1.0	--	1
1,3-Dichlorobenzene	ND		ug/l	1.0	--	1

Project Name: CITY OF NEW BEDFORD **Lab Number:** L1014330

Project Number: 115058 **Report Date:** 09/22/10

SAMPLE RESULTS

Lab ID: L1014330-03 Date Collected: 09/13/10 13:10

Client ID: MW-21 Date Received: 09/15/10

Sample Location: NBHS Field Prep: Not Specified

Parameter	Result	Qualifier	Units	RL	MDL	Dilution Factor
MCP Volatile Organics - Westborough Lab						
1,4-Dichlorobenzene	ND		ug/l	1.0	--	1
Methyl tert butyl ether	ND		ug/l	2.0	--	1
p/m-Xylene	ND		ug/l	2.0	--	1
o-Xylene	ND		ug/l	1.0	--	1
cis-1,2-Dichloroethene	ND		ug/l	1.0	--	1
Dibromomethane	ND		ug/l	2.0	--	1
1,2,3-Trichloropropane	ND		ug/l	2.0	--	1
Styrene	ND		ug/l	1.0	--	1
Dichlorodifluoromethane	ND		ug/l	2.0	--	1
Acetone	ND		ug/l	5.0	--	1
Carbon disulfide	ND		ug/l	2.0	--	1
2-Butanone	ND		ug/l	5.0	--	1
4-Methyl-2-pentanone	ND		ug/l	5.0	--	1
2-Hexanone	ND		ug/l	5.0	--	1
Bromochloromethane	ND		ug/l	2.0	--	1
Tetrahydrofuran	ND		ug/l	10	--	1
2,2-Dichloropropane	ND		ug/l	2.0	--	1
1,2-Dibromoethane	ND		ug/l	2.0	--	1
1,3-Dichloropropane	ND		ug/l	2.0	--	1
1,1,1,2-Tetrachloroethane	ND		ug/l	1.0	--	1
Bromobenzene	ND		ug/l	2.0	--	1
n-Butylbenzene	ND		ug/l	2.0	--	1
sec-Butylbenzene	ND		ug/l	2.0	--	1
tert-Butylbenzene	ND		ug/l	2.0	--	1
o-Chlorotoluene	ND		ug/l	2.0	--	1
p-Chlorotoluene	ND		ug/l	2.0	--	1
1,2-Dibromo-3-chloropropane	ND		ug/l	2.0	--	1
Hexachlorobutadiene	ND		ug/l	0.60	--	1
Isopropylbenzene	ND		ug/l	2.0	--	1
p-Isopropyltoluene	ND		ug/l	2.0	--	1
Naphthalene	ND		ug/l	2.0	--	1
n-Propylbenzene	ND		ug/l	2.0	--	1
1,2,3-Trichlorobenzene	ND		ug/l	2.0	--	1
1,2,4-Trichlorobenzene	ND		ug/l	2.0	--	1
1,3,5-Trimethylbenzene	ND		ug/l	2.0	--	1
1,2,4-Trimethylbenzene	ND		ug/l	2.0	--	1
Ethyl ether	ND		ug/l	2.0	--	1

Project Name: CITY OF NEW BEDFORD **Lab Number:** L1014330

Project Number: 115058 **Report Date:** 09/22/10

SAMPLE RESULTS

Lab ID:	L1014330-03	Date Collected:	09/13/10 13:10
Client ID:	MW-21	Date Received:	09/15/10
Sample Location:	NBHS	Field Prep:	Not Specified

Parameter	Result	Qualifier	Units	RL	MDL	Dilution Factor
MCP Volatile Organics - Westborough Lab						
Isopropyl Ether	ND		ug/l	2.0	--	1
Ethyl-Tert-Butyl-Ether	ND		ug/l	2.0	--	1
Tertiary-Amyl Methyl Ether	ND		ug/l	2.0	--	1
1,4-Dioxane	ND		ug/l	250	--	1

Surrogate	% Recovery	Qualifier	Acceptance Criteria
1,2-Dichloroethane-d4	97		70-130
Toluene-d8	99		70-130
4-Bromofluorobenzene	110		70-130
Dibromofluoromethane	106		70-130

Project Name: CITY OF NEW BEDFORD **Lab Number:** L1014330

Project Number: 115058 **Report Date:** 09/22/10

SAMPLE RESULTS

Lab ID:	L1014330-04	Date Collected:	09/13/10 13:25
Client ID:	MW-11	Date Received:	09/15/10
Sample Location:	NBHS	Field Prep:	Not Specified
Matrix:	Water		
Analytical Method:	97,8260B		
Analytical Date:	09/16/10 12:55		
Analyst:	MM		

Parameter	Result	Qualifier	Units	RL	MDL	Dilution Factor
MCP Volatile Organics - Westborough Lab						
Methylene chloride	ND		ug/l	2.0	--	1
1,1-Dichloroethane	ND		ug/l	1.0	--	1
Chloroform	ND		ug/l	1.0	--	1
Carbon tetrachloride	ND		ug/l	1.0	--	1
1,2-Dichloropropane	ND		ug/l	1.0	--	1
Dibromochloromethane	ND		ug/l	1.0	--	1
1,1,2-Trichloroethane	ND		ug/l	1.0	--	1
Tetrachloroethene	ND		ug/l	1.0	--	1
Chlorobenzene	ND		ug/l	1.0	--	1
Trichlorofluoromethane	ND		ug/l	2.0	--	1
1,2-Dichloroethane	ND		ug/l	1.0	--	1
1,1,1-Trichloroethane	ND		ug/l	1.0	--	1
Bromodichloromethane	ND		ug/l	1.0	--	1
trans-1,3-Dichloropropene	ND		ug/l	0.50	--	1
cis-1,3-Dichloropropene	ND		ug/l	0.50	--	1
1,1-Dichloropropene	ND		ug/l	2.0	--	1
Bromoform	ND		ug/l	2.0	--	1
1,1,2,2-Tetrachloroethane	ND		ug/l	1.0	--	1
Benzene	ND		ug/l	1.0	--	1
Toluene	ND		ug/l	1.0	--	1
Ethylbenzene	ND		ug/l	1.0	--	1
Chloromethane	ND		ug/l	2.0	--	1
Bromomethane	ND		ug/l	2.0	--	1
Vinyl chloride	ND		ug/l	1.0	--	1
Chloroethane	ND		ug/l	2.0	--	1
1,1-Dichloroethene	ND		ug/l	1.0	--	1
trans-1,2-Dichloroethene	ND		ug/l	1.0	--	1
Trichloroethene	ND		ug/l	1.0	--	1
1,2-Dichlorobenzene	ND		ug/l	1.0	--	1
1,3-Dichlorobenzene	ND		ug/l	1.0	--	1

Project Name: CITY OF NEW BEDFORD **Lab Number:** L1014330

Project Number: 115058 **Report Date:** 09/22/10

SAMPLE RESULTS

Lab ID: L1014330-04 Date Collected: 09/13/10 13:25

Client ID: MW-11 Date Received: 09/15/10

Sample Location: NBHS Field Prep: Not Specified

Parameter	Result	Qualifier	Units	RL	MDL	Dilution Factor
MCP Volatile Organics - Westborough Lab						
1,4-Dichlorobenzene	ND		ug/l	1.0	--	1
Methyl tert butyl ether	ND		ug/l	2.0	--	1
p/m-Xylene	ND		ug/l	2.0	--	1
o-Xylene	ND		ug/l	1.0	--	1
cis-1,2-Dichloroethene	ND		ug/l	1.0	--	1
Dibromomethane	ND		ug/l	2.0	--	1
1,2,3-Trichloropropane	ND		ug/l	2.0	--	1
Styrene	ND		ug/l	1.0	--	1
Dichlorodifluoromethane	ND		ug/l	2.0	--	1
Acetone	ND		ug/l	5.0	--	1
Carbon disulfide	ND		ug/l	2.0	--	1
2-Butanone	ND		ug/l	5.0	--	1
4-Methyl-2-pentanone	ND		ug/l	5.0	--	1
2-Hexanone	ND		ug/l	5.0	--	1
Bromochloromethane	ND		ug/l	2.0	--	1
Tetrahydrofuran	ND		ug/l	10	--	1
2,2-Dichloropropane	ND		ug/l	2.0	--	1
1,2-Dibromoethane	ND		ug/l	2.0	--	1
1,3-Dichloropropane	ND		ug/l	2.0	--	1
1,1,1,2-Tetrachloroethane	ND		ug/l	1.0	--	1
Bromobenzene	ND		ug/l	2.0	--	1
n-Butylbenzene	ND		ug/l	2.0	--	1
sec-Butylbenzene	ND		ug/l	2.0	--	1
tert-Butylbenzene	ND		ug/l	2.0	--	1
o-Chlorotoluene	ND		ug/l	2.0	--	1
p-Chlorotoluene	ND		ug/l	2.0	--	1
1,2-Dibromo-3-chloropropane	ND		ug/l	2.0	--	1
Hexachlorobutadiene	ND		ug/l	0.60	--	1
Isopropylbenzene	ND		ug/l	2.0	--	1
p-Isopropyltoluene	ND		ug/l	2.0	--	1
Naphthalene	ND		ug/l	2.0	--	1
n-Propylbenzene	ND		ug/l	2.0	--	1
1,2,3-Trichlorobenzene	ND		ug/l	2.0	--	1
1,2,4-Trichlorobenzene	ND		ug/l	2.0	--	1
1,3,5-Trimethylbenzene	ND		ug/l	2.0	--	1
1,2,4-Trimethylbenzene	ND		ug/l	2.0	--	1
Ethyl ether	ND		ug/l	2.0	--	1

Project Name: CITY OF NEW BEDFORD **Lab Number:** L1014330

Project Number: 115058 **Report Date:** 09/22/10

SAMPLE RESULTS

Lab ID:	L1014330-04	Date Collected:	09/13/10 13:25
Client ID:	MW-11	Date Received:	09/15/10
Sample Location:	NBHS	Field Prep:	Not Specified

Parameter	Result	Qualifier	Units	RL	MDL	Dilution Factor
MCP Volatile Organics - Westborough Lab						
Isopropyl Ether	ND		ug/l	2.0	--	1
Ethyl-Tert-Butyl-Ether	ND		ug/l	2.0	--	1
Tertiary-Amyl Methyl Ether	ND		ug/l	2.0	--	1
1,4-Dioxane	ND		ug/l	250	--	1

Surrogate	% Recovery	Qualifier	Acceptance Criteria
1,2-Dichloroethane-d4	96		70-130
Toluene-d8	97		70-130
4-Bromofluorobenzene	108		70-130
Dibromofluoromethane	103		70-130

Project Name: CITY OF NEW BEDFORD **Lab Number:** L1014330

Project Number: 115058 **Report Date:** 09/22/10

SAMPLE RESULTS

Lab ID:	L1014330-05	Date Collected:	09/13/10 15:10
Client ID:	MW-18	Date Received:	09/15/10
Sample Location:	NBHS	Field Prep:	Not Specified
Matrix:	Water		
Analytical Method:	97,8260B		
Analytical Date:	09/16/10 13:28		
Analyst:	MM		

Parameter	Result	Qualifier	Units	RL	MDL	Dilution Factor
MCP Volatile Organics - Westborough Lab						
Methylene chloride	ND		ug/l	2.0	--	1
1,1-Dichloroethane	ND		ug/l	1.0	--	1
Chloroform	ND		ug/l	1.0	--	1
Carbon tetrachloride	ND		ug/l	1.0	--	1
1,2-Dichloropropane	ND		ug/l	1.0	--	1
Dibromochloromethane	ND		ug/l	1.0	--	1
1,1,2-Trichloroethane	ND		ug/l	1.0	--	1
Tetrachloroethene	ND		ug/l	1.0	--	1
Chlorobenzene	ND		ug/l	1.0	--	1
Trichlorofluoromethane	ND		ug/l	2.0	--	1
1,2-Dichloroethane	ND		ug/l	1.0	--	1
1,1,1-Trichloroethane	ND		ug/l	1.0	--	1
Bromodichloromethane	ND		ug/l	1.0	--	1
trans-1,3-Dichloropropene	ND		ug/l	0.50	--	1
cis-1,3-Dichloropropene	ND		ug/l	0.50	--	1
1,1-Dichloropropene	ND		ug/l	2.0	--	1
Bromoform	ND		ug/l	2.0	--	1
1,1,2,2-Tetrachloroethane	ND		ug/l	1.0	--	1
Benzene	ND		ug/l	1.0	--	1
Toluene	ND		ug/l	1.0	--	1
Ethylbenzene	ND		ug/l	1.0	--	1
Chloromethane	ND		ug/l	2.0	--	1
Bromomethane	ND		ug/l	2.0	--	1
Vinyl chloride	ND		ug/l	1.0	--	1
Chloroethane	ND		ug/l	2.0	--	1
1,1-Dichloroethene	ND		ug/l	1.0	--	1
trans-1,2-Dichloroethene	ND		ug/l	1.0	--	1
Trichloroethene	ND		ug/l	1.0	--	1
1,2-Dichlorobenzene	ND		ug/l	1.0	--	1
1,3-Dichlorobenzene	ND		ug/l	1.0	--	1

Project Name: CITY OF NEW BEDFORD **Lab Number:** L1014330

Project Number: 115058 **Report Date:** 09/22/10

SAMPLE RESULTS

Lab ID: L1014330-05 Date Collected: 09/13/10 15:10

Client ID: MW-18 Date Received: 09/15/10

Sample Location: NBHS Field Prep: Not Specified

Parameter	Result	Qualifier	Units	RL	MDL	Dilution Factor
MCP Volatile Organics - Westborough Lab						
1,4-Dichlorobenzene	ND		ug/l	1.0	--	1
Methyl tert butyl ether	ND		ug/l	2.0	--	1
p/m-Xylene	ND		ug/l	2.0	--	1
o-Xylene	ND		ug/l	1.0	--	1
cis-1,2-Dichloroethene	ND		ug/l	1.0	--	1
Dibromomethane	ND		ug/l	2.0	--	1
1,2,3-Trichloropropane	ND		ug/l	2.0	--	1
Styrene	ND		ug/l	1.0	--	1
Dichlorodifluoromethane	ND		ug/l	2.0	--	1
Acetone	ND		ug/l	5.0	--	1
Carbon disulfide	ND		ug/l	2.0	--	1
2-Butanone	ND		ug/l	5.0	--	1
4-Methyl-2-pentanone	ND		ug/l	5.0	--	1
2-Hexanone	ND		ug/l	5.0	--	1
Bromochloromethane	ND		ug/l	2.0	--	1
Tetrahydrofuran	ND		ug/l	10	--	1
2,2-Dichloropropane	ND		ug/l	2.0	--	1
1,2-Dibromoethane	ND		ug/l	2.0	--	1
1,3-Dichloropropane	ND		ug/l	2.0	--	1
1,1,1,2-Tetrachloroethane	ND		ug/l	1.0	--	1
Bromobenzene	ND		ug/l	2.0	--	1
n-Butylbenzene	ND		ug/l	2.0	--	1
sec-Butylbenzene	ND		ug/l	2.0	--	1
tert-Butylbenzene	ND		ug/l	2.0	--	1
o-Chlorotoluene	ND		ug/l	2.0	--	1
p-Chlorotoluene	ND		ug/l	2.0	--	1
1,2-Dibromo-3-chloropropane	ND		ug/l	2.0	--	1
Hexachlorobutadiene	ND		ug/l	0.60	--	1
Isopropylbenzene	ND		ug/l	2.0	--	1
p-Isopropyltoluene	ND		ug/l	2.0	--	1
Naphthalene	ND		ug/l	2.0	--	1
n-Propylbenzene	ND		ug/l	2.0	--	1
1,2,3-Trichlorobenzene	ND		ug/l	2.0	--	1
1,2,4-Trichlorobenzene	ND		ug/l	2.0	--	1
1,3,5-Trimethylbenzene	ND		ug/l	2.0	--	1
1,2,4-Trimethylbenzene	ND		ug/l	2.0	--	1
Ethyl ether	ND		ug/l	2.0	--	1

Project Name: CITY OF NEW BEDFORD **Lab Number:** L1014330

Project Number: 115058 **Report Date:** 09/22/10

SAMPLE RESULTS

Lab ID:	L1014330-05	Date Collected:	09/13/10 15:10
Client ID:	MW-18	Date Received:	09/15/10
Sample Location:	NBHS	Field Prep:	Not Specified

Parameter	Result	Qualifier	Units	RL	MDL	Dilution Factor
MCP Volatile Organics - Westborough Lab						
Isopropyl Ether	ND		ug/l	2.0	--	1
Ethyl-Tert-Butyl-Ether	ND		ug/l	2.0	--	1
Tertiary-Amyl Methyl Ether	ND		ug/l	2.0	--	1
1,4-Dioxane	ND		ug/l	250	--	1

Surrogate	% Recovery	Qualifier	Acceptance Criteria
1,2-Dichloroethane-d4	95		70-130
Toluene-d8	95		70-130
4-Bromofluorobenzene	108		70-130
Dibromofluoromethane	106		70-130

Project Name: CITY OF NEW BEDFORD **Lab Number:** L1014330

Project Number: 115058 **Report Date:** 09/22/10

SAMPLE RESULTS

Lab ID:	L1014330-06	Date Collected:	09/13/10 17:00
Client ID:	MW-4	Date Received:	09/15/10
Sample Location:	NBHS	Field Prep:	Not Specified
Matrix:	Water		
Analytical Method:	97,8260B		
Analytical Date:	09/16/10 14:00		
Analyst:	MM		

Parameter	Result	Qualifier	Units	RL	MDL	Dilution Factor
MCP Volatile Organics - Westborough Lab						
Methylene chloride	ND		ug/l	2.0	--	1
1,1-Dichloroethane	ND		ug/l	1.0	--	1
Chloroform	ND		ug/l	1.0	--	1
Carbon tetrachloride	ND		ug/l	1.0	--	1
1,2-Dichloropropane	ND		ug/l	1.0	--	1
Dibromochloromethane	ND		ug/l	1.0	--	1
1,1,2-Trichloroethane	ND		ug/l	1.0	--	1
Tetrachloroethene	ND		ug/l	1.0	--	1
Chlorobenzene	ND		ug/l	1.0	--	1
Trichlorofluoromethane	ND		ug/l	2.0	--	1
1,2-Dichloroethane	ND		ug/l	1.0	--	1
1,1,1-Trichloroethane	ND		ug/l	1.0	--	1
Bromodichloromethane	ND		ug/l	1.0	--	1
trans-1,3-Dichloropropene	ND		ug/l	0.50	--	1
cis-1,3-Dichloropropene	ND		ug/l	0.50	--	1
1,1-Dichloropropene	ND		ug/l	2.0	--	1
Bromoform	ND		ug/l	2.0	--	1
1,1,2,2-Tetrachloroethane	ND		ug/l	1.0	--	1
Benzene	ND		ug/l	1.0	--	1
Toluene	ND		ug/l	1.0	--	1
Ethylbenzene	ND		ug/l	1.0	--	1
Chloromethane	ND		ug/l	2.0	--	1
Bromomethane	ND		ug/l	2.0	--	1
Vinyl chloride	ND		ug/l	1.0	--	1
Chloroethane	ND		ug/l	2.0	--	1
1,1-Dichloroethene	ND		ug/l	1.0	--	1
trans-1,2-Dichloroethene	ND		ug/l	1.0	--	1
Trichloroethene	ND		ug/l	1.0	--	1
1,2-Dichlorobenzene	ND		ug/l	1.0	--	1
1,3-Dichlorobenzene	ND		ug/l	1.0	--	1

Project Name: CITY OF NEW BEDFORD **Lab Number:** L1014330

Project Number: 115058 **Report Date:** 09/22/10

SAMPLE RESULTS

Lab ID: L1014330-06 Date Collected: 09/13/10 17:00

Client ID: MW-4 Date Received: 09/15/10

Sample Location: NBHS Field Prep: Not Specified

Parameter	Result	Qualifier	Units	RL	MDL	Dilution Factor
MCP Volatile Organics - Westborough Lab						
1,4-Dichlorobenzene	ND		ug/l	1.0	--	1
Methyl tert butyl ether	ND		ug/l	2.0	--	1
p/m-Xylene	ND		ug/l	2.0	--	1
o-Xylene	ND		ug/l	1.0	--	1
cis-1,2-Dichloroethene	ND		ug/l	1.0	--	1
Dibromomethane	ND		ug/l	2.0	--	1
1,2,3-Trichloropropane	ND		ug/l	2.0	--	1
Styrene	ND		ug/l	1.0	--	1
Dichlorodifluoromethane	ND		ug/l	2.0	--	1
Acetone	ND		ug/l	5.0	--	1
Carbon disulfide	ND		ug/l	2.0	--	1
2-Butanone	ND		ug/l	5.0	--	1
4-Methyl-2-pentanone	ND		ug/l	5.0	--	1
2-Hexanone	ND		ug/l	5.0	--	1
Bromochloromethane	ND		ug/l	2.0	--	1
Tetrahydrofuran	ND		ug/l	10	--	1
2,2-Dichloropropane	ND		ug/l	2.0	--	1
1,2-Dibromoethane	ND		ug/l	2.0	--	1
1,3-Dichloropropane	ND		ug/l	2.0	--	1
1,1,1,2-Tetrachloroethane	ND		ug/l	1.0	--	1
Bromobenzene	ND		ug/l	2.0	--	1
n-Butylbenzene	ND		ug/l	2.0	--	1
sec-Butylbenzene	ND		ug/l	2.0	--	1
tert-Butylbenzene	ND		ug/l	2.0	--	1
o-Chlorotoluene	ND		ug/l	2.0	--	1
p-Chlorotoluene	ND		ug/l	2.0	--	1
1,2-Dibromo-3-chloropropane	ND		ug/l	2.0	--	1
Hexachlorobutadiene	ND		ug/l	0.60	--	1
Isopropylbenzene	ND		ug/l	2.0	--	1
p-Isopropyltoluene	ND		ug/l	2.0	--	1
Naphthalene	ND		ug/l	2.0	--	1
n-Propylbenzene	ND		ug/l	2.0	--	1
1,2,3-Trichlorobenzene	ND		ug/l	2.0	--	1
1,2,4-Trichlorobenzene	ND		ug/l	2.0	--	1
1,3,5-Trimethylbenzene	ND		ug/l	2.0	--	1
1,2,4-Trimethylbenzene	ND		ug/l	2.0	--	1
Ethyl ether	ND		ug/l	2.0	--	1

Project Name: CITY OF NEW BEDFORD **Lab Number:** L1014330

Project Number: 115058 **Report Date:** 09/22/10

SAMPLE RESULTS

Lab ID:	L1014330-06	Date Collected:	09/13/10 17:00
Client ID:	MW-4	Date Received:	09/15/10
Sample Location:	NBHS	Field Prep:	Not Specified

Parameter	Result	Qualifier	Units	RL	MDL	Dilution Factor
MCP Volatile Organics - Westborough Lab						
Isopropyl Ether	ND		ug/l	2.0	--	1
Ethyl-Tert-Butyl-Ether	ND		ug/l	2.0	--	1
Tertiary-Amyl Methyl Ether	ND		ug/l	2.0	--	1
1,4-Dioxane	ND		ug/l	250	--	1

Surrogate	% Recovery	Qualifier	Acceptance Criteria
1,2-Dichloroethane-d4	95		70-130
Toluene-d8	99		70-130
4-Bromofluorobenzene	113		70-130
Dibromofluoromethane	105		70-130

Project Name: CITY OF NEW BEDFORD **Lab Number:** L1014330

Project Number: 115058 **Report Date:** 09/22/10

SAMPLE RESULTS

Lab ID:	L1014330-07	Date Collected:	09/13/10 00:00
Client ID:	TRIP BLANK	Date Received:	09/15/10
Sample Location:	NBHS	Field Prep:	Not Specified
Matrix:	Water		
Analytical Method:	97,8260B		
Analytical Date:	09/16/10 10:46		
Analyst:	MM		

Parameter	Result	Qualifier	Units	RL	MDL	Dilution Factor
MCP Volatile Organics - Westborough Lab						
Methylene chloride	ND		ug/l	2.0	--	1
1,1-Dichloroethane	ND		ug/l	1.0	--	1
Chloroform	ND		ug/l	1.0	--	1
Carbon tetrachloride	ND		ug/l	1.0	--	1
1,2-Dichloropropane	ND		ug/l	1.0	--	1
Dibromochloromethane	ND		ug/l	1.0	--	1
1,1,2-Trichloroethane	ND		ug/l	1.0	--	1
Tetrachloroethene	ND		ug/l	1.0	--	1
Chlorobenzene	ND		ug/l	1.0	--	1
Trichlorofluoromethane	ND		ug/l	2.0	--	1
1,2-Dichloroethane	ND		ug/l	1.0	--	1
1,1,1-Trichloroethane	ND		ug/l	1.0	--	1
Bromodichloromethane	ND		ug/l	1.0	--	1
trans-1,3-Dichloropropene	ND		ug/l	0.50	--	1
cis-1,3-Dichloropropene	ND		ug/l	0.50	--	1
1,1-Dichloropropene	ND		ug/l	2.0	--	1
Bromoform	ND		ug/l	2.0	--	1
1,1,2,2-Tetrachloroethane	ND		ug/l	1.0	--	1
Benzene	ND		ug/l	1.0	--	1
Toluene	ND		ug/l	1.0	--	1
Ethylbenzene	ND		ug/l	1.0	--	1
Chloromethane	ND		ug/l	2.0	--	1
Bromomethane	ND		ug/l	2.0	--	1
Vinyl chloride	ND		ug/l	1.0	--	1
Chloroethane	ND		ug/l	2.0	--	1
1,1-Dichloroethene	ND		ug/l	1.0	--	1
trans-1,2-Dichloroethene	ND		ug/l	1.0	--	1
Trichloroethene	ND		ug/l	1.0	--	1
1,2-Dichlorobenzene	ND		ug/l	1.0	--	1
1,3-Dichlorobenzene	ND		ug/l	1.0	--	1

Project Name: CITY OF NEW BEDFORD **Lab Number:** L1014330

Project Number: 115058 **Report Date:** 09/22/10

SAMPLE RESULTS

Lab ID: L1014330-07 Date Collected: 09/13/10 00:00

Client ID: TRIP BLANK Date Received: 09/15/10

Sample Location: NBHS Field Prep: Not Specified

Parameter	Result	Qualifier	Units	RL	MDL	Dilution Factor
MCP Volatile Organics - Westborough Lab						
1,4-Dichlorobenzene	ND		ug/l	1.0	--	1
Methyl tert butyl ether	ND		ug/l	2.0	--	1
p/m-Xylene	ND		ug/l	2.0	--	1
o-Xylene	ND		ug/l	1.0	--	1
cis-1,2-Dichloroethene	ND		ug/l	1.0	--	1
Dibromomethane	ND		ug/l	2.0	--	1
1,2,3-Trichloropropane	ND		ug/l	2.0	--	1
Styrene	ND		ug/l	1.0	--	1
Dichlorodifluoromethane	ND		ug/l	2.0	--	1
Acetone	ND		ug/l	5.0	--	1
Carbon disulfide	ND		ug/l	2.0	--	1
2-Butanone	ND		ug/l	5.0	--	1
4-Methyl-2-pentanone	ND		ug/l	5.0	--	1
2-Hexanone	ND		ug/l	5.0	--	1
Bromochloromethane	ND		ug/l	2.0	--	1
Tetrahydrofuran	ND		ug/l	10	--	1
2,2-Dichloropropane	ND		ug/l	2.0	--	1
1,2-Dibromoethane	ND		ug/l	2.0	--	1
1,3-Dichloropropane	ND		ug/l	2.0	--	1
1,1,1,2-Tetrachloroethane	ND		ug/l	1.0	--	1
Bromobenzene	ND		ug/l	2.0	--	1
n-Butylbenzene	ND		ug/l	2.0	--	1
sec-Butylbenzene	ND		ug/l	2.0	--	1
tert-Butylbenzene	ND		ug/l	2.0	--	1
o-Chlorotoluene	ND		ug/l	2.0	--	1
p-Chlorotoluene	ND		ug/l	2.0	--	1
1,2-Dibromo-3-chloropropane	ND		ug/l	2.0	--	1
Hexachlorobutadiene	ND		ug/l	0.60	--	1
Isopropylbenzene	ND		ug/l	2.0	--	1
p-Isopropyltoluene	ND		ug/l	2.0	--	1
Naphthalene	ND		ug/l	2.0	--	1
n-Propylbenzene	ND		ug/l	2.0	--	1
1,2,3-Trichlorobenzene	ND		ug/l	2.0	--	1
1,2,4-Trichlorobenzene	ND		ug/l	2.0	--	1
1,3,5-Trimethylbenzene	ND		ug/l	2.0	--	1
1,2,4-Trimethylbenzene	ND		ug/l	2.0	--	1
Ethyl ether	ND		ug/l	2.0	--	1

Project Name: CITY OF NEW BEDFORD **Lab Number:** L1014330

Project Number: 115058 **Report Date:** 09/22/10

SAMPLE RESULTS

Lab ID:	L1014330-07	Date Collected:	09/13/10 00:00
Client ID:	TRIP BLANK	Date Received:	09/15/10
Sample Location:	NBHS	Field Prep:	Not Specified

Parameter	Result	Qualifier	Units	RL	MDL	Dilution Factor
MCP Volatile Organics - Westborough Lab						
Isopropyl Ether	ND		ug/l	2.0	--	1
Ethyl-Tert-Butyl-Ether	ND		ug/l	2.0	--	1
Tertiary-Amyl Methyl Ether	ND		ug/l	2.0	--	1
1,4-Dioxane	ND		ug/l	250	--	1

Surrogate	% Recovery	Qualifier	Acceptance Criteria
1,2-Dichloroethane-d4	87		70-130
Toluene-d8	99		70-130
4-Bromofluorobenzene	111		70-130
Dibromofluoromethane	104		70-130

Project Name: CITY OF NEW BEDFORD **Lab Number:** L1014330

Project Number: 115058 **Report Date:** 09/22/10

Method Blank Analysis
Batch Quality Control

Analytical Method: 97,8260B
Analytical Date: 09/16/10 08:36
Analyst: MM

Parameter	Result	Qualifier	Units	RL	MDL
MCP Volatile Organics - Westborough Lab for sample(s): 01-07 Batch: WG432715-3					
Methylene chloride	ND		ug/l	2.0	--
1,1-Dichloroethane	ND		ug/l	1.0	--
Chloroform	ND		ug/l	1.0	--
Carbon tetrachloride	ND		ug/l	1.0	--
1,2-Dichloropropane	ND		ug/l	1.0	--
Dibromochloromethane	ND		ug/l	1.0	--
1,1,2-Trichloroethane	ND		ug/l	1.0	--
Tetrachloroethene	ND		ug/l	1.0	--
Chlorobenzene	ND		ug/l	1.0	--
Trichlorofluoromethane	ND		ug/l	2.0	--
1,2-Dichloroethane	ND		ug/l	1.0	--
1,1,1-Trichloroethane	ND		ug/l	1.0	--
Bromodichloromethane	ND		ug/l	1.0	--
trans-1,3-Dichloropropene	ND		ug/l	0.50	--
cis-1,3-Dichloropropene	ND		ug/l	0.50	--
1,1-Dichloropropene	ND		ug/l	2.0	--
Bromoform	ND		ug/l	2.0	--
1,1,2,2-Tetrachloroethane	ND		ug/l	1.0	--
Benzene	ND		ug/l	1.0	--
Toluene	ND		ug/l	1.0	--
Ethylbenzene	ND		ug/l	1.0	--
Chloromethane	ND		ug/l	2.0	--
Bromomethane	ND		ug/l	2.0	--
Vinyl chloride	ND		ug/l	1.0	--
Chloroethane	ND		ug/l	2.0	--
1,1-Dichloroethene	ND		ug/l	1.0	--
trans-1,2-Dichloroethene	ND		ug/l	1.0	--
Trichloroethene	ND		ug/l	1.0	--
1,2-Dichlorobenzene	ND		ug/l	1.0	--
1,3-Dichlorobenzene	ND		ug/l	1.0	--
1,4-Dichlorobenzene	ND		ug/l	1.0	--

Project Name: CITY OF NEW BEDFORD **Lab Number:** L1014330

Project Number: 115058 **Report Date:** 09/22/10

Method Blank Analysis
Batch Quality Control

Analytical Method: 97,8260B
Analytical Date: 09/16/10 08:36
Analyst: MM

Parameter	Result	Qualifier	Units	RL	MDL
MCP Volatile Organics - Westborough Lab for sample(s): 01-07 Batch: WG432715-3					
Methyl tert butyl ether	ND		ug/l	2.0	--
p/m-Xylene	ND		ug/l	2.0	--
o-Xylene	ND		ug/l	1.0	--
cis-1,2-Dichloroethene	ND		ug/l	1.0	--
Dibromomethane	ND		ug/l	2.0	--
1,2,3-Trichloropropane	ND		ug/l	2.0	--
Styrene	ND		ug/l	1.0	--
Dichlorodifluoromethane	ND		ug/l	2.0	--
Acetone	ND		ug/l	5.0	--
Carbon disulfide	ND		ug/l	2.0	--
2-Butanone	ND		ug/l	5.0	--
4-Methyl-2-pentanone	ND		ug/l	5.0	--
2-Hexanone	ND		ug/l	5.0	--
Bromochloromethane	ND		ug/l	2.0	--
Tetrahydrofuran	ND		ug/l	10	--
2,2-Dichloropropane	ND		ug/l	2.0	--
1,2-Dibromoethane	ND		ug/l	2.0	--
1,3-Dichloropropane	ND		ug/l	2.0	--
1,1,1,2-Tetrachloroethane	ND		ug/l	1.0	--
Bromobenzene	ND		ug/l	2.0	--
n-Butylbenzene	ND		ug/l	2.0	--
sec-Butylbenzene	ND		ug/l	2.0	--
tert-Butylbenzene	ND		ug/l	2.0	--
o-Chlorotoluene	ND		ug/l	2.0	--
p-Chlorotoluene	ND		ug/l	2.0	--
1,2-Dibromo-3-chloropropane	ND		ug/l	2.0	--
Hexachlorobutadiene	ND		ug/l	0.60	--
Isopropylbenzene	ND		ug/l	2.0	--
p-Isopropyltoluene	ND		ug/l	2.0	--
Naphthalene	ND		ug/l	2.0	--
n-Propylbenzene	ND		ug/l	2.0	--

Project Name: CITY OF NEW BEDFORD **Lab Number:** L1014330

Project Number: 115058 **Report Date:** 09/22/10

Method Blank Analysis
Batch Quality Control

Analytical Method: 97,8260B
Analytical Date: 09/16/10 08:36
Analyst: MM

Parameter	Result	Qualifier	Units	RL	MDL
MCP Volatile Organics - Westborough Lab for sample(s): 01-07 Batch: WG432715-3					
1,2,3-Trichlorobenzene	ND		ug/l	2.0	--
1,2,4-Trichlorobenzene	ND		ug/l	2.0	--
1,3,5-Trimethylbenzene	ND		ug/l	2.0	--
1,2,4-Trimethylbenzene	ND		ug/l	2.0	--
Ethyl ether	ND		ug/l	2.0	--
Isopropyl Ether	ND		ug/l	2.0	--
Ethyl-Tert-Butyl-Ether	ND		ug/l	2.0	--
Tertiary-Amyl Methyl Ether	ND		ug/l	2.0	--
1,4-Dioxane	ND		ug/l	250	--

Surrogate	%Recovery	Qualifier	Acceptance Criteria
1,2-Dichloroethane-d4	88		70-130
Toluene-d8	100		70-130
4-Bromofluorobenzene	110		70-130
Dibromofluoromethane	104		70-130

Lab Control Sample Analysis
Batch Quality Control

Project Name: CITY OF NEW BEDFORD
Project Number: 115058

Lab Number: L1014330
Report Date: 09/22/10

Parameter	LCS %Recovery	Qual	LCSD %Recovery	Qual	%Recovery Limits	RPD	Qual	RPD Limits
MCP Volatile Organics - Westborough Lab Associated sample(s): 01-07 Batch: WG432715-1 WG432715-2								
Methylene chloride	105		101		70-130	4		20
1,1-Dichloroethane	96		92		70-130	4		20
Chloroform	97		94		70-130	3		20
Carbon tetrachloride	112		106		70-130	6		20
1,2-Dichloropropane	94		93		70-130	1		20
Dibromochloromethane	95		98		70-130	3		20
1,1,2-Trichloroethane	88		90		70-130	2		20
Tetrachloroethene	93		85		70-130	9		20
Chlorobenzene	90		85		70-130	6		20
Trichlorofluoromethane	95		88		70-130	8		20
1,2-Dichloroethane	87		92		70-130	6		20
1,1,1-Trichloroethane	100		95		70-130	5		20
Bromodichloromethane	100		105		70-130	5		20
trans-1,3-Dichloropropene	92		92		70-130	0		20
cis-1,3-Dichloropropene	83		85		70-130	2		20
1,1-Dichloropropene	96		93		70-130	3		20
Bromoform	102		107		70-130	5		20
1,1,2,2-Tetrachloroethane	90		98		70-130	9		20
Benzene	97		93		70-130	4		20
Toluene	94		86		70-130	9		20
Ethylbenzene	98		88		70-130	11		20

Lab Control Sample Analysis
Batch Quality Control

Project Name: CITY OF NEW BEDFORD
Project Number: 115058

Lab Number: L1014330
Report Date: 09/22/10

Parameter	LCS %Recovery	Qual	LCSD %Recovery	Qual	%Recovery Limits	RPD	Qual	RPD Limits
MCP Volatile Organics - Westborough Lab Associated sample(s): 01-07 Batch: WG432715-1 WG432715-2								
Chloromethane	96		91		70-130	5		20
Bromomethane	96		85		70-130	12		20
Vinyl chloride	90		80		70-130	12		20
Chloroethane	76		72		70-130	5		20
1,1-Dichloroethene	90		84		70-130	7		20
trans-1,2-Dichloroethene	94		90		70-130	4		20
Trichloroethene	92		89		70-130	3		20
1,2-Dichlorobenzene	92		91		70-130	1		20
1,3-Dichlorobenzene	94		88		70-130	7		20
1,4-Dichlorobenzene	94		89		70-130	5		20
Methyl tert butyl ether	78		89		70-130	13		20
p/m-Xylene	94		86		70-130	9		20
o-Xylene	96		89		70-130	8		20
cis-1,2-Dichloroethene	101		94		70-130	7		20
Dibromomethane	82		85		70-130	4		20
1,2,3-Trichloropropane	87		92		70-130	6		20
Styrene	96		90		70-130	6		20
Dichlorodifluoromethane	86		80		70-130	7		20
Acetone	85		106		70-130	**22**	Q	20
Carbon disulfide	70		**64**	Q	70-130	9		20
2-Butanone	90		111		70-130	**21**	Q	20

Lab Control Sample Analysis
Batch Quality Control

Project Name: CITY OF NEW BEDFORD
Project Number: 115058
Lab Number: L1014330
Report Date: 09/22/10

Parameter	LCS %Recovery	Qual	LCSD %Recovery	Qual	%Recovery Limits	RPD	Qual	RPD Limits
MCP Volatile Organics - Westborough Lab Associated sample(s): 01-07 Batch: WG432715-1 WG432715-2								
4-Methyl-2-pentanone	83		98		70-130	17		20
2-Hexanone	77		91		70-130	17		20
Bromochloromethane	94		97		70-130	3		20
Tetrahydrofuran	78		93		70-130	18		20
2,2-Dichloropropane	99		92		70-130	7		20
1,2-Dibromoethane	89		90		70-130	1		20
1,3-Dichloropropane	90		92		70-130	2		20
1,1,1,2-Tetrachloroethane	114		111		70-130	3		20
Bromobenzene	91		89		70-130	2		20
n-Butylbenzene	100		90		70-130	11		20
sec-Butylbenzene	98		89		70-130	10		20
tert-Butylbenzene	95		88		70-130	8		20
o-Chlorotoluene	93		86		70-130	8		20
p-Chlorotoluene	96		88		70-130	9		20
1,2-Dibromo-3-chloropropane	81		97		70-130	18		20
Hexachlorobutadiene	99		90		70-130	10		20
Isopropylbenzene	96		90		70-130	6		20
p-Isopropyltoluene	97		89		70-130	9		20
Naphthalene	72		81		70-130	12		20
n-Propylbenzene	97		89		70-130	9		20
1,2,3-Trichlorobenzene	81		83		70-130	2		20

Lab Control Sample Analysis
Batch Quality Control

Project Name: CITY OF NEW BEDFORD
Project Number: 115058
Lab Number: L1014330
Report Date: 09/22/10

Parameter	LCS %Recovery	Qual	LCSD %Recovery	Qual	%Recovery Limits	RPD	Qual	RPD Limits
MCP Volatile Organics - Westborough Lab Associated sample(s): 01-07 Batch: WG432715-1 WG432715-2								
1,2,4-Trichlorobenzene	82		86		70-130	5		20
1,3,5-Trimethylbenzene	93		88		70-130	6		20
1,2,4-Trimethylbenzene	93		88		70-130	6		20
Ethyl ether	86		92		70-130	7		20
Isopropyl Ether	89		93		70-130	4		20
Ethyl-Tert-Butyl-Ether	83		91		70-130	9		20
Tertiary-Amyl Methyl Ether	82		92		70-130	11		20
1,4-Dioxane	92		96		70-130	4		20

Surrogate	LCS %Recovery	Qual	LCSD %Recovery	Qual	Acceptance Criteria
1,2-Dichloroethane-d4	85		94		70-130
Toluene-d8	98		97		70-130
4-Bromofluorobenzene	96		96		70-130
Dibromofluoromethane	98		100		70-130

Project Name: CITY OF NEW BEDFORD
Project Number: 115058

Lab Number: L1014330
Report Date: 09/22/10

Sample Receipt and Container Information

Were project specific reporting limits specified? YES

Reagent H2O Preserved Vials Frozen on: NA

Cooler Information Custody Seal

Cooler	
A	Absent

Container Information

Container ID	Container Type	Cooler	pH	Temp deg C	Pres	Seal	Analysis(*)
L1014330-01A	Vial HCl preserved	A	N/A	3	Y	Absent	MCP-8260-10(14)
L1014330-01B	Vial HCl preserved	A	N/A	3	Y	Absent	MCP-8260-10(14)
L1014330-02A	Vial HCl preserved	A	N/A	3	Y	Absent	MCP-8260-10(14)
L1014330-02B	Vial HCl preserved	A	N/A	3	Y	Absent	MCP-8260-10(14)
L1014330-03A	Vial HCl preserved	A	N/A	3	Y	Absent	MCP-8260-10(14)
L1014330-03B	Vial HCl preserved	A	N/A	3	Y	Absent	MCP-8260-10(14)
L1014330-04A	Vial HCl preserved	A	N/A	3	Y	Absent	MCP-8260-10(14)
L1014330-04B	Vial HCl preserved	A	N/A	3	Y	Absent	MCP-8260-10(14)
L1014330-05A	Vial HCl preserved	A	N/A	3	Y	Absent	MCP-8260-10(14)
L1014330-05B	Vial HCl preserved	A	N/A	3	Y	Absent	MCP-8260-10(14)
L1014330-06A	Vial HCl preserved	A	N/A	3	Y	Absent	MCP-8260-10(14)
L1014330-06B	Vial HCl preserved	A	N/A	3	Y	Absent	MCP-8260-10(14)
L1014330-07A	Vial HCl preserved	A	N/A	3	Y	Absent	MCP-8260-10(14)

*Values in parentheses indicate holding time in days

Project Name:	CITY OF NEW BEDFORD	**Lab Number:**	L1014330
Project Number:	115058	**Report Date:**	09/22/10

GLOSSARY

Acronyms

EPA	· Environmental Protection Agency.
LCS	· Laboratory Control Sample: A sample matrix, free from the analytes of interest, spiked with verified known amounts of analytes or a material containing known and verified amounts of analytes.
LCSD	· Laboratory Control Sample Duplicate: Refer to LCS.
MDL	· Method Detection Limit: This value represents the level to which target analyte concentrations are reported as estimated values, when those target analyte concentrations are quantified below the reporting limit (RL). The MDL includes any adjustments from dilutions, concentrations or moisture content, where applicable.
MS	· Matrix Spike Sample: A sample prepared by adding a known mass of target analyte to a specified amount of matrix sample for which an independent estimate of target analyte concentration is available.
MSD	· Matrix Spike Sample Duplicate: Refer to MS.
NA	· Not Applicable.
NC	· Not Calculated: Term is utilized when one or more of the results utilized in the calculation are non-detect at the parameter's reporting unit.
NI	· Not Ignitable.
RL	· Reporting Limit: The value at which an instrument can accurately measure an analyte at a specific concentration. The RL includes any adjustments from dilutions, concentrations or moisture content, where applicable.
RPD	· Relative Percent Difference: The results from matrix and/or matrix spike duplicates are primarily designed to assess the precision of analytical results in a given matrix and are expressed as relative percent difference (RPD). Values which are less than five times the reporting limit for any individual parameter are evaluated by utilizing the absolute difference between the values; although the RPD value will be provided in the report.

Terms

Analytical Method: Both the document from which the method originates and the analytical reference method. (Example: EPA 8260B is shown as 1,8260B.) The codes for the reference method documents are provided in the References section of the Addendum.

Data Qualifiers

A	- Spectra identified as "Aldol Condensation Product".
B	- The analyte was detected above the reporting limit in the associated method blank. Flag only applies to associated field samples that have detectable concentrations of the analyte at less than five times (5x) the concentration found in the blank. For MCP-related projects, flag only applies to associated field samples that have detectable concentrations of the analyte at less than ten times (10x) the concentration found in the blank. For DOD-related projects, flag only applies to associated field samples that have detectable concentrations of the analyte at less than ten times (10x) the concentration found in the blank AND the analyte was detected above one-half the reporting limit (or above the reporting limit for common lab contaminants) in the associated method blank.
D	- Concentration of analyte was quantified from diluted analysis. Flag only applies to field samples that have detectable concentrations of the analyte.
E	- Concentration of analyte exceeds the range of the calibration curve and/or linear range of the instrument.
H	- The analysis of pH was performed beyond the regulatory-required holding time of 15 minutes from the time of sample collection.
I	- The RPD between the results for the two columns exceeds the method-specified criteria; however, the lower value has been reported due to obvious interference.
P	- The RPD between the results for the two columns exceeds the method-specified criteria.
Q	- The quality control sample exceeds the associated acceptance criteria. Note: This flag is not applicable for matrix spike recoveries when the sample concentration is greater than 4x the spike added or for batch duplicate RPD when the sample concentrations are less than 5x the RL. (Metals only.)
R	- Analytical results are from sample re-analysis.

Report Format: Data Usability Report

Project Name:	CITY OF NEW BEDFORD	**Lab Number:**	L1014330
Project Number:	115058	**Report Date:**	09/22/10

Data Qualifiers

RE - Analytical results are from sample re-extraction.

J - Estimated value. This represents an estimated concentration for Tentatively Identified Compounds (TICs).

ND - Not detected at the reporting limit (RL) for the sample.

Report Format: Data Usability Report

Project Name: CITY OF NEW BEDFORD **Lab Number:** L1014330
Project Number: 115058 **Report Date:** 09/22/10

REFERENCES

97 EPA Test Methods (SW-846) with QC Requirements & Performance Standards for the Analysis of EPA SW-846 Methods under the Massachusetts Contingency Plan, WSC-CAM-IIA, IIB, IIIA, IIIB, IIIC, IIID, VA, VB, VC, VIA, VIB, VIIIA and VIIIB, July 2010.

LIMITATION OF LIABILITIES

Alpha Analytical performs services with reasonable care and diligence normal to the analytical testing laboratory industry. In the event of an error, the sole and exclusive responsibility of Alpha Analytical shall be to re-perform the work at it's own expense. In no event shall Alpha Analytical be held liable for any incidental, consequential or special damages, including but not limited to, damages in any way connected with the use of, interpretation of, information or analysis provided by Alpha Analytical.

We strongly urge our clients to comply with EPA protocol regarding sample volume, preservation, cooling, containers, sampling procedures, holding time and splitting of samples in the field.

Certificate/Approval Program Summary

Last revised July 19, 2010 - Westboro Facility

The following list includes only those analytes/methods for which certification/approval is currently held.
For a complete listing of analytes for the referenced methods, please contact your Alpha Customer Service Representative.

Connecticut Department of Public Health Certificate/Lab ID: PH-0574. ***NELAP Accredited Solid Waste/Soil.***

Drinking Water (Inorganic Parameters: Color, pH, Turbidity, Conductivity, Alkalinity, Chloride, Free Residual Chlorine, Fluoride, Calcium Hardness, Sulfate, Nitrate, Nitrite, Aluminum, Antimony, Arsenic, Barium, Beryllium, Cadmium, Calcium, Chromium, Copper, Iron, Lead, Magnesium, Manganese, Mercury, Molybdenum, Nickel, Potassium, Selenium, Silver, Sodium, Thallium, Vanadium, Zinc, Total Dissolved Solids, Total Organic Carbon, Total Cyanide, Perchlorate. Organic Parameters: Volatile Organics 524.2, Total Trihalomethanes 524.2, 1,2-Dibromo-3-chloropropane (DBCP), Ethylene Dibromide (EDB), 1,4-Dioxane (Mod 8270). Microbiology Parameters: Total Coliform-MF mEndo (SM9222B), Total Coliform – Colilert (SM9223 P/A), E. Coli. – Colilert (SM9223 P/A), HPC – Pour Plate (SM9215B), Fecal Coliform – MF m-FC (SM9222D))
Wastewater/Non-Potable Water (Inorganic Parameters: Color, pH, Conductivity, Acidity, Alkalinity, Chloride, Total Residual Chlorine, Fluoride, Total Hardness, Silica, Sulfate, Sulfide, Ammonia, Kjeldahl Nitrogen, Nitrate, Nitrite, O-Phosphate, Total Phosphorus, Aluminum, Antimony, Arsenic, Barium, Beryllium, Boron, Cadmium, Calcium, Chromium, Hexavalent Chromium, Cobalt, Copper, Iron, Lead, Magnesium, Manganese, Mercury, Molybdenum, Nickel, Potassium, Selenium, Silver, Sodium, Strontium, Thallium, Tin, Titanium, Vanadium, Zinc, Total Residue (Solids), Total Dissolved Solids, Total Suspended Solids (non-filterable), BOD, CBOD, COD, TOC, Total Cyanide, Phenolics, Foaming Agents (MBAS), Bromide, Oil and Grease. Organic Parameters: PCBs, Organochlorine Pesticides, Technical Chlordane, Toxaphene, 2,4-D, 2,4,5-T, 2,4,5-TP(Silvex), Acid Extractables (Phenols), Benzidines, Phthalate Esters, Nitrosamines, Nitroaromatics & Isophorone, Polynuclear Aromatic Hydrocarbons, Haloethers, Chlorinated Hydrocarbons, Volatile Organics, TPH (HEM/SGT), Extractable Petroleum Hydrocarbons (ETPH), MA-EPH, MA-VPH. Microbiology Parameters: Total Coliform – MF mEndo (SM9222B), Total Coliform – MTF (SM9221B), HPC – Pour Plate (SM9215B), Fecal Coliform – MF m-FC (SM9222D), Fecal Coliform – A-1 Broth (SM9221E).)
Solid Waste/Soil (Inorganic Parameters: pH, Sulfide, Aluminum, Antimony, Arsenic, Barium, Beryllium, Boron, Cadmium, Calcium, Chromium, Hexavalent Chromium, Cobalt, Copper, Iron, Lead, Magnesium, Manganese, Mercury, Molybdenum, Nickel, Potassium, Selenium, Silver, Sodium, Thallium, Tin, Vanadium, Zinc, Total Cyanide, Ignitability, Phenolics, Corrosivity, TCLP Leach (1311), SPLP Leach (1312 metals only), Reactivity. Organic Parameters: PCBs, PCBs in Oil, Organochlorine Pesticides, Technical Chlordane, Toxaphene, Extractable Petroleum Hydrocarbons (ETPH), MA-EPH, MA-VPH, Dicamba, 2,4-D, 2,4,5-T, 2,4,5-TP(Silvex), Volatile Organics, Acid Extractables (Phenols), 3.3'-Dichlorobenzidine, Phthalates, Nitrosamines, Nitroaromatics & Cyclic Ketones, PAHs, Haloethers, Chlorinated Hydrocarbons.)

Maine Department of Human Services Certificate/Lab ID: 2009024.
Drinking Water (Inorganic Parameters: SM9215B, 9222D, 9223B, EPA 180.1, 300.0, 353.2, SM2130B, 2320B, 4500Cl-D, 4500CN-C, 4500CN-E, 4500F-C, 4500H+B, 4500NO3-F, EPA 200.7, EPA 200.8, 245.1, EPA 300.0. Organic Parameters: 504.1, 524.2.)
Wastewater/Non-Potable Water (Inorganic Parameters: EPA 120.1, 1664A, 350.1, 351.1, 353.2, 410.4, 420.1, Lachat 10-107-06-1-B, SM2320B, 2340B, 2510B, 2540C, 2540D, 426C, 4500Cl-D, 4500Cl-E, 4500CN-C, 4500CN-E, 4500F-B, 4500F-C, 4500H+B, 4500Norg-B, 4500Norg-C, 4500NH3-B, 4500NH3-G, 4500NH3-H, 4500NO3-F, 4500P-B.5, 4500P-E, 5210B, 5220D, 5310C, EPA 200.7, 200.8, 245.1. Organic Parameters: 608, 624, ME DRO, ME GRO, MA EPH, MA VPH.)
*Solid Waste/Soil (*Organic Parameters: ME DRO, ME GRO, MA EPH, MA VPH.)

Massachusetts Department of Environmental Protection Certificate/Lab ID: M-MA086.
Drinking Water
Inorganic Parameters: (EPA 200.8 for: Sb,As,Ba,Be,Cd,Cr,Cu,Pb,Ni,Se,Tl)
(EPA 200.7 for: Ba,Be,Ca,Cd,Cr,Cu,Na,Ni) 245.1, (300.0 for: Nitrate-N, Fluoride, Sulfate)
353.2 for: Nitrate-N, Nitrite-N; SM4500NO3-F, 4500F-C, 4500CN-CE, EPA 180.1, SM2130B, SM4500Cl-D, 2320B, SM2540C, SM4500H-B.
Organic Parameters: (EPA 524.2 for: Trihalomethanes, Volatile Organics)
(504.1 for: 1,2-Dibromoethane, 1,2-Dibromo-3-Chloropropane), 314.0, 332.
Microbiology Parameters: SM9215B; ENZ. SUB. SM9223; MF-SM9222D
Non-Potable Water
Inorganic Parameters:, (EPA 200.8 for: Al,Sb,As,Be,Cd,Cr,Cu,Pb,Mn,Ni,Se,Ag,Tl,Zn)
(EPA 200.7 for: Al,Sb,As,Be,Cd,Cr,Co,Cu,Fe,Pb,Mn,Mo,Ni,Se,Ag,Sr,Ti,Tl, V,Zn,Ca,Mg,Na,K)
245.1, SM4500H,B, EPA 120.1, SM2510B, 2540C, 2540B, 2340B, 2320B, 4500CL-E, 4500F-BC, 426C, SM4500NH3-BH, (EPA 350.1 for: Ammonia-N), LACHAT 10-107-06-1-B for Ammonia-N, SM4500NO3-F, 353.2 for Nitrate-N, SM4500NH3-B,C-Titr, SM4500NH3-BC-NES, EPA 351.1, SM4500P-E, 4500P-B,E, 5220D, EPA 410.4, SM 5210B, 5310C, 4500CL-D, EPA 1664, SM14 510AC, EPA 420, SM4500-CN-CE, SM2540D.
Organic Parameters: (EPA 624 for Volatile Halocarbons, Volatile Aromatics)

(608 for: Chlordane, Aldrin, Dieldrin, DDD, DDE, DDT, Heptachlor, Heptachlor Epoxide, PCBs-Water), EPA 625 for SVOC Acid Extractables and SVOC Base/Neutral Extractables, 600/4-81-045-PCB-Oil

New Hampshire Department of Environmental Services Certificate/Lab ID: 200307. ***NELAP Accredited.***
Drinking Water (Inorganic Parameters: SM6215B, 9222B, 9223B Colilert, EPA 200.7, 200.8, 245.2, 120.1, 300.0, 314.0, SM4500CN-E, 4500H+B, 4500NO3-F, 2320B, 2510B, 2540C, 4500F-C, 5310C, 2120B, EPA 331.0. Organic Parameters: 504.1, 524.2, SM6251B.)
Non-Potable Water (Inorganic Parameters: SM9222D, 9221B, 9222B, 9221E-EC, EPA 200.7, 200.8, 245.1, 245.2, SW-846 6010B, 6020, 7196A, 7470A, SM3500-CR-D, EPA 120.1, 300.0, 350.1, 351.1, 353.2, 420.1, 1664A, SW-846 9010, 9030, 9040B, SM426C, SM2310B, 2540B, 2540D, 4500H+B, 4500NH3-H, 4500NH3-E, 4500NO2-B, 4500P-E, 4500-S2-D, 5210B, 2320B, 2540C, 4500F-C, 5310C, 5540C, LACHAT 10-117-07-1-B, LACHAT 10-107-06-1-B, LACHAT 10-107-04-1-C, LACHAT 10-107-04-1-J, LACHAT 10-117-07-1-A, SM4500CL-E, LACHAT 10-204-00-1-A, LACHAT 10-107-06-2-D. Organic Parameters: SW-846 3005A, 3015A, 3510C, 5030B, 8021B, 8260B, 8270C, 8330, EPA 624, 625, 608, SW-846 8082, 8081A.)
Solid & Chemical Materials (Inorganic Parameters: SW-846 6010B, 7196A, 7471A, 7.3.3.2, 7.3.4.2, 1010, 1030, 9010, 9012A, 9014, 9030B, 9040, 9045C, 9050C, 1311, 3005A, 3050B, 3051A. Organic Parameters: SW-846 3540C, 3545, 3580A, 5030B, 5035, 8021B, 8260B, 8270C, 8330, 8151A, 8082, 8081A.)

New Jersey Department of Environmental Protection Certificate/Lab ID: MA935. ***NELAP Accredited.***
Drinking Water (Inorganic Parameters: SM9222B, 9221E, 9223B, 9215B, 4500NO3-F, 4500F-C, EPA 300.0, 200.7, 2540C, 2320B, 314.0, SM2120B, 2510B, 5310C, SM4500H-B, EPA 200.8, 245.2. Organic Parameters: 504.1, SM6251B, 524.2.)
Non-Potable Water (Inorganic Parameters: SM5210B, EPA 410.4, SM5220D, 4500Cl-D, EPA 300.0, SM2120B, SM4500F-BC, EPA 200.7, 351.1, LACHAT 10-107-06-2-D, EPA 353.2, SM4500NO3-F, 4500NO2-B, EPA 1664A, SM5310B, C or D, 4500-PE, EPA 420.1, SM4500P-B5+E, 2540B, 2540C, 2540D, EPA 120.1, SM2510B, SM15 426C, SM9221CE, 9222D, 9221B, 9222B, 9215B, 2310B, 2320B, 4500NH3-H, 4500-S D, EPA 350.1, SM5210B, SW-846 3015, 6020, 7470A, 5540C, 4500H-B, EPA 200.8, SM3500Cr-D, EPA 245.1, 245.2, SW-846 9040B, 3005A, EPA 6010B, 7196A, SW-846 9010B, 9030B. Organic Parameters: SW-846 8260B, 8270C, 3510C, EPA 608, 624, 625, SW-846 5030B, 8021B, 8081A, 8082, 8151A, 8330, NJ OQA-QAM-025 Rev.7.)
Solid & Chemical Materials (Inorganic Parameters: SW-846 9040B, 3005A, 6010B, 7196A, 5030B, 9010B, 9030B, 1030, 1311, 3050B, 3051, 7471A, 9014, 9012A, 9045C, 9050A, 9065. Organic Parameters: SW-846 8021B, 8081A, 8082, 8151A, 8330, 8260B, 8270C, 1311, 1312, 3540C, 3545, 3550B, 3580A, 5035L, 5035H, NJ OQA-QAM-025 Rev.7.)

New York Department of Health Certificate/Lab ID: 11148. ***NELAP Accredited.***
Drinking Water (Inorganic Parameters: SM9223B, 9222B, 9215B, EPA 200.8, 200.7, 245.2, SM5310C, EPA 314.0, 332.0, SM2320B, EPA 300.0, SM2120B, 4500CN-E, 4500F-C, 4500H-B, 4500NO3-F, 2540C, EPA 120.1, SM 2510B. Organic Parameters: EPA 524.2, 504.1.)
Non-Potable Water (Inorganic Parameters: SM9221E, 9222D, 9221B, 9222B, 9215B, 5210B, EPA 410.4, SM5220D, 2310B-4a, 2320B, EPA 200.7, 300.0, LACHAT 10-117-07-1A or B, SM4500Cl-E, 4500F-C, SM15 426C, EPA 350.1, LACHAT 10-107-06-1-B, SM4500NH3-H, EPA 351.1, LACHAT 10-107-06-2, EPA 353.2, LACHAT 10-107-041-C, SM4500-NO3-F, 4500-NO2-B, 4500P-E, 2540C, 2540B, 2540D, EPA 200.8, EPA 6010B, 6020, EPA 7196A, S\M3500Cr-D, EPA 245.1, 245.2, 7470A, SM2120B, SM4500-CN-E LACHAT 10-204-00-1-A, EPA 9040B, SM4500-HB, EPA 1664A, SM5310C, EPA 420.1, SM14 510C, EPA 120.1, SM2510B, SM4500S-D, SM5540C, EPA 3005A, 3015. Organic Parameters: EPA 624, 8260B, 8270C, 625, 608, 8081A, 8151A, 8330, 8082, EPA 3510C, 5030B, 9010B, 9030B.)
Solid & Hazardous Waste (Inorganic Parameters: 1010, 1030, SW-846 Ch 7 Sec 7.3, EPA 6010B, 7196A, 7471A, 9012A, 9014, 9040B, 9045C, 9065, 9050, EPA 1311, 1312, 3005A, 3050B, 9010B, 9030B. Organic Parameters: EPA 8260B, 8270C, 8081A, 8151A, 8330, 8082, 3540C, 3545, 3546, 3580, 5030B, 5035.)

North Carolina Department of the Environment and Natural Resources Certificate/Lab ID : 666. Organic Parameters: MA-EPH, MA-VPH.

Pennsylvania Department of Environmental Protection Certificate/Lab ID : 68-03671. ***NELAP Accredited.***
Non-Potable Water (Organic Parameters: EPA 3510C, 5030B, 625, 624. 608, 8081A, 8082, 8151A, 8260B, 8270C, 8330)
Solid & Hazardous Waste (Inorganic Parameters: EPA 1010, 1030, 1311, 3050B, 3051, 6010B, EPA 7.3.3.2, EPA 7.3.4.2, 7196A, 7471A, 9010B, 9012A, 9014, 9040B, 9045C, 9050, 9065. Organic Parameters: 3540C, 3545, 3580A, 5035, 8021B, 8081A, 8082, 8151A, 8260B, 8270C, 8330)

Rhode Island Department of Health Certificate/Lab ID: LAO00065. ***NELAP Accredited via NY-DOH.***
Refer to MA-DEP Certificate for Potable and Non-Potable Water.
Refer to NY-DOH Certificate for Potable and Non-Potable Water.

Texas Commisson on Environmental Quality Certificate/Lab ID: T104704476-09-1. ***NELAP Accredited.***
Non-Potable Water (Inorganic Parameters: EPA 120.1, 1664, 200.7, 200.8, 245.1, 245.2, 300.0, 350.1, 351.1, 353.2, 376.2, 410.4, 420.1, 6010, 6020, 7196, 7470, 9040, SM 2120B, 2310B, 2320B, 2510B, 2540B, 2540C, 2540D, 426C, 4500CL-E, 4500CN-E, 4500F-C, 4500H+B, 4500NH3-H, 4500NO2B, 4500P-E, 4500 S2¯D, 510C, 5210B, 5220D, 5310C, 5540C. Organic Parameters: EPA 608, 624, 625, 8081, 8082, 8151, 8260, 8270, 8330.)

Solid & Hazardous Waste (Inorganic Parameters: EPA 1311, 1312, 9012, 9014, 9040, 9045, 9050, 9065.)

Department of Defense Certificate/Lab ID: L2217.
Drinking Water (Inorganic Parameters: SM 4500H-B. Organic Parameters: EPA 524.2, 504.1.)

Non-Potable Water (Inorganic Parameters: EPA 200.7, 200.8, 6010B, 6020, 245.1, 245.2, 7470A, 9040B, 300.0, 9251, 9038, 350.1, 353.2, 351.1, 120.1, 9050A , 410.4, 9060, 1664, 420.1, LACHAT 10-107-06-1-B, SM 4500CN-E, 4500H-B, 4500CL-E, 4500F-BC, 4500SO4-E, 426C, 4500NH3-B, 4500NH3-H, 4500NO3-F, 4500NO2-B, 4500Norg-C, 4500PE, 2510B, 5540C, 5220D, 5310C, 2540B, 2540C, 2540D, 510C, 4500S2-AD, 3005A, 3015, 9010B, 9030B. Organic Parameters: EPA 8260B, 8270C, 8330, 625, 8082, 8151A, 8081A, 3510C, 5030B, MassDEP EPH, MassDEP VPH.)

Solid & Hazardous Waste (Inorganic Parameters: EPA 200.7, 6010B, 7471A, 9040B, 9045C, 9065, 420.1, 9012A, 6860, 1311, 1312, 3050B, 9030B, 3051, 9010B, 3540C, SM 510ABC, 4500CN-CE, 2540G, SW-846 7.3, Organic Parameters: EPA 8260B, 8270C, 8330, 8082, 8081A, 8151A, 3545, 3546, 3580, 5035, MassDEP EPH, MassDEP VPH.)

Analytes Not Accredited by NELAP
Certification is not available by NELAP for the following analytes: **EPA 8260B:** Freon-113, 1,2,4,5-Tetramethylbenzene, 4-Ethyltoluene. **EPA 8330A:** PETN, Picric Acid, Nitroglycerine, 2,6-DANT, 2,4-DANT. **EPA 8270C:** Methyl naphthalene, Dimethyl naphthalene, Total Methylnapthalenes, Total Dimethylnaphthalenes, 1,4-Diphenylhydrazine (Azobenzene). **EPA 625:** 4-Chloroaniline. **EPA 350.1** for Ammonia in a Soil matrix.

Serial_No:09221010:12

CHAIN OF CUSTODY

PAGE 1 OF 1

ALPHA ANALYTICAL

WESTBORO, MA TEL: 508-898-9220 FAX: 508-898-9193

MANSFIELD, MA TEL: 508-822-9300 FAX: 508-822-3288

Date Rec'd in Lab: 9/15/10

ALPHA Job #: L1014330

Client Information

Client: TRC

Address: 650 Suffolk St Lowell MA. 01854

Phone: 978-970-5600

Fax:

Email: DSullivan@TRCSolutions.com

☐ These samples have been previously analyzed by Alpha

Project Information

Project Name: City of New Bedford

Project Location: NBHS

Project #: 115058

Project Manager: David Sullivan

ALPHA Quote #:

Turn-Around Time

☒ Standard ☐ RUSH (only confirmed if pre-approved!)

Date Due: 5 Day Time:

Report Information - Data Deliverables

☐ FAX ☒ EMAIL

☐ ADEx ☐ Add'l Deliverables

Billing Information

☐ Same as Client info PO #: 27361

Regulatory Requirements/Report Limits

State /Fed Program MCP GW-1,2+3 Criteria

MA MCP PRESUMPTIVE CERTAINTY --- CT REASONABLE CONFIDENCE PROTO

☐ Yes ☐ No Are MCP Analytical Methods Required?

☐ Yes ☐ No Is Matrix Spike (MS) Required on this SDG? (If yes see note in Comments)

☐ Yes ☐ No Are CT RCP (Reasonable Confidence Protocols) Required?

Other Project Specific Requirements/Comments/Detection Limits:

If MS is required , indicate in Sample Specific Comments which samples and what tests MS to be performed.
(Note: All *CAM* methods for inorganic analyses require MS every 20 soil samples)

ALPHA Lab ID (Lab Use Only)	Sample ID	Collection Date	Collection Time	Sample Matrix	Sampler's Initials	ANALYSIS: VOCs + TO15 (15)	Sample Specific Comments	TOTAL # BOTTLES
4330.1	MW-22	9/13/10	1110	GW		X		2
2	MW-23		1045			X		2
3	MW-21		1310			X		2
4	MW-11		1325			X		2
5	MW-18		1510			X		2
6	MW-4		1700			X		2
7	Trip Blank	9/7/10	—			X		1

SAMPLE HANDLING

Filtration
☐ Done
☐ Not needed
☐ Lab to do

Preservation
☐ Lab to do
(Please specify below)

Container Type	✓
Preservative	B

PLEASE ANSWER QUESTIONS ABOVE!

IS YOUR PROJECT MA MCP *or* CT RCP?

Relinquished By:	Date/Time	Received By:	Date/Time
[illegible]	9/15/10 1350	[illegible]	9/15/10 1350
[illegible]	9/15/10 1645	[illegible]	9/15/10 1645

Please print clearly, legibly and completely. Samples can not be logged in and turnaround time clock will not start until any ambiguities are resolved. All samples submitted are subject to Alpha's Terms and Conditions. See reverse side.

FORM NO: 01-01 (rev. 18-Jan-2010)

7A
VOLATILE CONTINUING CALIBRATION CHECK

Lab Name: Alpha Analytical Labs

SDG No.: L1014330

Instrument ID: Jack.i Calibration Date: 16-SEP-2010 Time: 07:00

Lab File ID: 0916A01.D Init. Calib. Date(s): 03-SEP-2 03-SEP-2

Sample No: 8260 CCAL Init. Calib. Times : 12:12 15:59

Compound	RRF	RRF	MIN RRF	%D	MAX %D	
dichlorodifluoromethane	.68646	.5932	.1	14	20	
chloromethane	.78155	.75077	.1	4	20	
vinyl chloride	1.0685	.96265	.1	10	20	
bromomethane	.57544	.5549	.1	4	20	
chloroethane	.64096	.48665	.1	24	20	F
trichlorofluoromethane	1.5116	1.4345	.1	5	20	
ethyl ether	.42693	.36596	.05	14	20	
1,1,-dichloroethene	.94941	.85773	.1	10	20	
carbon disulfide	2.6401	1.8409	.1	30	20	F
freon-113	.99642	.97098	.1	3	20	
iodomethane	100	52.785	.05	47	20	F
acrolien	.0374	.05277	.05	-41	20	F
methylene chloride	.72789	.76203	.1	-5	20	
acetone	.10251	.08751	.1	15	20	
trans-1,2-dichloroethene	.76338	.72049	.1	6	20	
methyl acetate	.27941	.2663	.1	5	20	
methyl tert butyl ether	1.4699	1.1525	.1	22	20	F
tert butyl alcohol	.04723	.04204	.05	11	20	F
Diisopropyl Ether	2.1392	1.8981	.01	11	20	
1,1-dichloroethane	1.3154	1.2643	.2	4	20	
Halothane	.59755	.54285	.05	9	20	
Ethyl-Tert-Butyl-Ether	1.7804	1.4726	.05	17	20	
vinyl acetate	.90152	.76524	.05	15	20	
cis-1,2-dichloroethene	.80117	.80677	.1	-1	20	
2,2-dichloropropane	.94597	.93438	.05	1	20	
bromochloromethane	.36128	.33896	.05	6	20	
chloroform	1.2929	1.2521	.2	3	20	
carbontetrachloride	.77189	.86461	.1	-12	20	
ethyl acetate	.37533	.31565	.05	16	20	
1,1,1-trichloroethane	1.0634	1.0607	.1	0	20	
1,1-dichloropropene	1.0239	.98169	.05	4	20	
2-butanone	.16313	.14629	.1	10	20	
benzene	2.9734	2.8812	.5	3	20	
Tertiary-Amyl Methyl Ether	1.5240	1.2494	.05	18	20	
tetrahydrofuran	.14127	.10958	.05	22	20	F
1,2-dichloroethane	.8022	.69964	.1	13	20	
trichloroethene	.79254	.72746	.2	8	20	
dibromomethane	.37938	.31311	.05	17	20	

FORM VII MCP-8260-10

7A
CONTINUING CALIBRATION CHECK

Lab Name: Alpha Analytical Labs

SDG No.: L1014330

Instrument ID: Jack.i Calibration Date: 16-SEP-2010 Time: 07:00

Lab File ID: 0916A01.D Init. Calib. Date(s): 03-SEP-2 03-SEP-2

Sample No: 8260 CCAL Init. Calib. Times : 12:12 15:59

Compound	RRF	RRF	MIN RRF	%D	MAX %D	
1,2-dichloropropane	.71939	.67924	.1	6	20	
bromodichloromethane	.81553	.81327	.2	0	20	
1,4-dioxane	.00341	.00315	.05	8	20	F
2-chloroethylvinyl ether	.29055	.24038	.05	17	20	
cis-1,3-dichloropropene	.95367	.79	.2	17	20	
toluene	2.3151	2.1796	.4	6	20	
tetrachloroethene	1.0973	1.0182	.2	7	20	
4-methyl-2-pentanone	.1381	.11463	.1	17	20	
trans-1,3-dichloropropene	.85811	.78633	.1	8	20	
1,1,2-trichloroethane	.46676	.4085	.1	12	20	
chlorodibromomethane	.59904	.57018	.1	5	20	
1,3-dichloropropane	.98175	.88795	.05	10	20	
1,2-dibromoethane	.53655	.47669	.1	11	20	
2-hexanone	.27606	.21296	.1	23	20	F
chlorobenzene	2.5659	2.3044	.5	10	20	
ethyl benzene	4.4231	4.3365	.1	2	20	
1,1,1,2-tetrachloroethane	.62787	.71373	.05	-14	20	
p/m xylene	1.8665	1.7449	.1	7	20	
o xylene	1.7840	1.7040	.3	4	20	
bromoform	100	102	.1	-2	20	
styrene	2.9896	2.8711	.3	4	20	
isopropylbenzene	4.4634	4.2951	.1	4	20	
bromobenzene	1.7927	1.6368	.05	9	20	
n-propylbenzene	8.0394	7.8099	.05	3	20	
1,1,2,2,-tetrachloroethane	1.0034	.90233	.3	10	20	
2-chlorotoluene	5.6034	5.2208	.05	7	20	
1,2,3-trichloropropane	.85056	.73927	.05	13	20	
1,3,5-trimethybenzene	5.6664	5.2718	.05	7	20	
trans-1,4-dichloro-2-butene	.1412	.14476	.05	-3	20	
4-chorotoluene	4.9535	4.7366	.05	4	20	
tert-butylbenzene	4.8490	4.6147	.05	5	20	
1,2,4-trimethylbenzene	5.7289	5.3512	.05	7	20	
sec-butylbenzene	6.7149	6.5703	.01	2	20	
p-isopropyltoluene	5.6691	5.4887	.05	3	20	
1,3-dichlorobenzene	3.5764	3.3509	.6	6	20	
1,4-dichlorobenzene	3.5629	3.3548	.5	6	20	
n-butylbenzene	4.4904	4.4828	.05	0	20	
1,2-dichlorobenzene	3.1552	2.9193	.4	7	20	

FORM VII MCP-8260-10

7A
CONTINUING CALIBRATION CHECK

Lab Name: Alpha Analytical Labs

SDG No.: L1014330

Instrument ID: Jack.i Calibration Date: 16-SEP-2010 Time: 07:00

Lab File ID: 0916A01.D Init. Calib. Date(s): 03-SEP-2 03-SEP-2

Sample No: 8260 CCAL Init. Calib. Times : 12:12 15:59

Compound	___ RRF	RRF	MIN RRF	%D	MAX %D	
1,2-dibromo-3-chloropropane	.13046	.10587	.05	19	20	
hexachlorobutadiene	.63463	.62776	.05	1	20	
1,2,4-trichlorobenzene	1.7182	1.4115	.2	18	20	
naphthalene	2.7586	1.9729	.05	28	20	F
1,2,3-trichlorobenzene	1.3080	1.0646	.05	19	20	
dibromofluoromethane	.27328	.26741	.05	2	20	
1,2-dichloroethane-d4	.26968	.22829	.05	15	20	
toluene-d8	1.2036	1.1794	.01	2	20	
4-bromofluorobenzene	.73268	.70225	.05	4	20	

FORM VII MCP-8260-10

ANALYTICAL REPORT

Lab Number:	L1013128
Client:	TRC Environmental Consultants Wannalancit Mills 650 Suffolk Street Lowell, MA 01854
ATTN:	David Sullivan
Phone:	(978) 656-3600
Project Name:	NEW BEDFORD
Project Number:	115058
Report Date:	08/31/10

Certifications & Approvals: MA (M-MA030), NY (11627), CT (PH-0141), NH (2206), NJ (MA015), RI (LAO00299), ME (MA0030), PA (Registration #68-02089), LA NELAC (03090), FL NELAC (E87814), US Army Corps of Engineers.

320 Forbes Boulevard, Mansfield, MA 02048-1806
508-822-9300 (Fax) 508-822-3288 800-624-9220 - www.alphalab.com

Project Name: NEW BEDFORD
Project Number: 115058

Lab Number: L1013128
Report Date: 08/31/10

Alpha Sample ID	Client ID	Sample Location	Collection Date/Time
L1013128-01	(IA 1) A-112-3	NBHS IAQ	08/24/10 10:50
L1013128-02	(IA DUP) A-112-3	NBHS IAQ	08/24/10 10:50
L1013128-03	(IA 2) B-114	NBHS IAQ	08/24/10 11:05
L1013128-04	(IA 3) D-120	NBHS IAQ	08/24/10 11:30
L1013128-05	CAN 1603	NBHS IAQ	

Project Name: NEW BEDFORD **Lab Number:** L1013128

Project Number: 115058 **Report Date:** 08/31/10

MADEP MCP Response Action Analytical Report Certification

This form provides certifications for all samples performed by MCP methods. Please refer to the Sample Results and Container Information sections of this report for specification of MCP methods used for each analysis. The following questions pertain only to MCP Analytical Methods.

An affirmative response to questions A through F is required for "Presumptive Certainty" status		
A	Were all samples received in a condition consistent with those described on the Chain-of-Custody, properly preserved (including temperature) in the field or laboratory, and prepared/analyzed within method holding times?	YES
B	Were the analytical method(s) and all associated QC requirements specified in the selected CAM protocol(s) followed?	YES
C	Were all required corrective actions and analytical response actions specified in the selected CAM protocol(s) implemented for all identified performance standard non-conformances?	YES
D	Does the laboratory report comply with all the reporting requirements specified in CAM VII A, "Quality Assurance and Quality Control Guidelines for the Acquisition and Reporting of Analytical Data?"	YES
E a	VPH, EPH, and APH Methods only: Was each method conducted without significant modification(s)? (Refer to the individual method(s) for a list of significant modifications).	N/A
E b	APH and TO-15 Methods only: Was the complete analyte list reported for each method?	NO
F	Were all applicable CAM protocol QC and performance standard non-conformances identified and evaluated in a laboratory narrative (including all "No" responses to Questions A through E)?	YES

A response to questions G, H and I is required for "Presumptive Certainty" status		
G	Were the reporting limits at or below all CAM reporting limits specified in the selected CAM protocol(s)?	YES
H	Were all QC performance standards specified in the CAM protocol(s) achieved?	YES
I	Were results reported for the complete analyte list specified in the selected CAM protocol(s)?	NO

For any questions answered "No", please refer to the case narrative section on the following page(s).

Please note that sample matrix information is located in the Sample Results section of this report.

Project Name: NEW BEDFORD **Lab Number:** L1013128
Project Number: 115058 **Report Date:** 08/31/10

Case Narrative

The samples were received in accordance with the Chain of Custody and no significant deviations were encountered during the preparation or analysis unless otherwise noted. Sample Receipt, Container Information, and the Chain of Custody are located at the back of the report.

Results contained within this report relate only to the samples submitted under this Alpha Lab Number and meet all of the requirements of NELAC, for all NELAC accredited parameters. The data presented in this report is organized by parameter (i.e. VOC, SVOC, etc.). Sample specific Quality Control data (i.e. Surrogate Spike Recovery) is reported at the end of the target analyte list for each individual sample, followed by the Laboratory Batch Quality Control at the end of each parameter. If a sample was re-analyzed or re-extracted due to a required quality control corrective action and if both sets of data are reported, the Laboratory ID of the re-analysis or re-extraction is designated with an "R" or "RE", respectively. When multiple Batch Quality Control elements are reported (e.g. more than one LCS), the associated samples for each element are noted in the grey shaded header line of each data table. Any Laboratory Batch, Sample Specific % recovery or RPD value that is outside the listed Acceptance Criteria is bolded in the report. Definitions of all data qualifiers and acronyms used in this report are provided in the Glossary located at the back of the report.

Please see the associated ADEx data file for a comparison of laboratory reporting limits that were achieved with the regulatory Numerical Standards requested on the Chain of Custody.

For additional information, please contact Client Services at 800-624-9220.

MCP Related Narratives

Canisters were released from the laboratory on August 19, 2010.

The canister certification data is provided as an addendum.

The internal standards were within method criteria.

In reference to questions E b/I:

All samples were analyzed for a subset of the MCP compounds per the project specifications.

MCP Volatile Organics in Air

L1013128-01 through -04 and WG429574-5 Duplicate: results for Acetone should be considered estimated due to co-elution with a non-target peak.

Project Name:	NEW BEDFORD	**Lab Number:**	L1013128
Project Number:	115058	**Report Date:**	08/31/10

Case Narrative (continued)

I, the undersigned, attest under the pains and penalties of perjury that, to the best of my knowledge and belief and based upon my personal inquiry of those responsible for providing the information contained in this analytical report, such information is accurate and complete. This certificate of analysis is not complete unless this page accompanies any and all pages of this report.

Authorized Signature: Kathleen O'Brien

Title: Technical Director/Representative

Date: 08/31/10

AIR

Project Name: NEW BEDFORD
Project Number: 115058
Lab Number: L1013128
Report Date: 08/31/10

SAMPLE RESULTS

Lab ID: L1013128-01
Client ID: (IA 1) A-112-3
Sample Location: NBHS IAQ
Matrix: Air
Anaytical Method: 101,TO-15
Analytical Date: 08/26/10 18:45
Analyst: AJ

Date Collected: 08/24/10 10:50
Date Received: 08/24/10
Field Prep: Not Specified

Parameter	ppbV Results	ppbV RL	ppbV MDL	ug/m3 Results	ug/m3 RL	ug/m3 MDL	Qualifier	Dilution Factor
MCP Volatile Organics in Air - Mansfield Lab								
Dichlorodifluoromethane	0.511	0.200	--	2.52	0.988	--		1
Chloromethane	0.505	0.200	--	1.04	0.413	--		1
Vinyl chloride	ND	0.200	--	ND	0.511	--		1
Bromomethane	ND	0.200	--	ND	0.776	--		1
Chloroethane	ND	0.200	--	ND	0.527	--		1
Acetone	3.17	1.00	--	7.52	2.37	--		1
Trichlorofluoromethane	0.267	0.200	--	1.50	1.12	--		1
Ethyl ether	ND	0.200	--	ND	0.606	--		1
1,1-Dichloroethene	ND	0.200	--	ND	0.792	--		1
Methylene chloride	ND	1.40	--	ND	4.86	--		1
Carbon disulfide	ND	0.200	--	ND	0.622	--		1
trans-1,2-Dichloroethene	ND	0.200	--	ND	0.792	--		1
1,1-Dichloroethane	ND	0.200	--	ND	0.809	--		1
Methyl tert butyl ether	ND	0.200	--	ND	0.720	--		1
2-Butanone	ND	0.200	--	ND	0.589	--		1
cis-1,2-Dichloroethene	ND	0.200	--	ND	0.792	--		1
Chloroform	0.261	0.200	--	1.27	0.976	--		1
Tetrahydrofuran	ND	0.200	--	ND	0.589	--		1
2,2-Dichloropropane	ND	0.200	--	ND	0.923	--		1
1,2-Dichloroethane	ND	0.200	--	ND	0.809	--		1
Isopropyl Ether	ND	0.200	--	ND	0.835	--		1
Ethyl-Tert-Butyl-Ether	ND	0.200	--	ND	0.835	--		1
1,1,1-Trichloroethane	ND	0.200	--	ND	1.09	--		1
1,1-Dichloropropene	ND	0.200	--	ND	0.907	--		1
Benzene	ND	0.200	--	ND	0.638	--		1

Project Name: NEW BEDFORD
Project Number: 115058
Lab Number: L1013128
Report Date: 08/31/10

SAMPLE RESULTS

Lab ID: L1013128-01
Client ID: (IA 1) A-112-3
Sample Location: NBHS IAQ

Date Collected: 08/24/10 10:50
Date Received: 08/24/10
Field Prep: Not Specified

Parameter	ppbV Results	ppbV RL	ppbV MDL	ug/m3 Results	ug/m3 RL	ug/m3 MDL	Qualifier	Dilution Factor
MCP Volatile Organics in Air - Mansfield Lab								
Carbon tetrachloride	ND	0.200	--	ND	1.26	--		1
Tertiary-Amyl Methyl Ether	ND	0.200	--	ND	0.835	--		1
Dibromomethane	ND	0.200	--	ND	1.42	--		1
1,2-Dichloropropane	ND	0.200	--	ND	0.924	--		1
Bromodichloromethane	ND	0.200	--	ND	1.34	--		1
1,4-Dioxane	ND	0.200	--	ND	0.720	--		1
Trichloroethene	ND	0.200	--	ND	1.07	--		1
cis-1,3-Dichloropropene	ND	0.200	--	ND	0.907	--		1
4-Methyl-2-pentanone	ND	0.200	--	ND	0.819	--		1
trans-1,3-Dichloropropene	ND	0.200	--	ND	0.907	--		1
1,1,2-Trichloroethane	ND	0.200	--	ND	1.09	--		1
Toluene	0.245	0.200	--	0.922	0.753	--		1
1,3-Dichloropropane	ND	0.200	--	ND	0.923	--		1
2-Hexanone	ND	0.200	--	ND	0.819	--		1
Dibromochloromethane	ND	0.200	--	ND	1.70	--		1
1,2-Dibromoethane	ND	0.200	--	ND	1.54	--		1
Tetrachloroethene	ND	0.200	--	ND	1.36	--		1
1,1,1,2-Tetrachloroethane	ND	0.200	--	ND	1.37	--		1
Chlorobenzene	ND	0.200	--	ND	0.920	--		1
Ethylbenzene	ND	0.200	--	ND	0.868	--		1
p/m-Xylene	ND	0.400	--	ND	1.74	--		1
Bromoform	ND	0.200	--	ND	2.06	--		1
Styrene	ND	0.200	--	ND	0.851	--		1
1,1,2,2-Tetrachloroethane	ND	0.200	--	ND	1.37	--		1
o-Xylene	ND	0.200	--	ND	0.868	--		1
1,2,3-Trichloropropane	ND	0.200	--	ND	1.20	--		1
Isopropylbenzene	ND	0.200	--	ND	0.982	--		1
Bromobenzene	ND	0.200	--	ND	1.28	--		1

Project Name: NEW BEDFORD
Project Number: 115058
Lab Number: L1013128
Report Date: 08/31/10

SAMPLE RESULTS

Lab ID: L1013128-01
Client ID: (IA 1) A-112-3
Sample Location: NBHS IAQ

Date Collected: 08/24/10 10:50
Date Received: 08/24/10
Field Prep: Not Specified

Parameter	ppbV Results	ppbV RL	ppbV MDL	ug/m3 Results	ug/m3 RL	ug/m3 MDL	Qualifier	Dilution Factor
MCP Volatile Organics in Air - Mansfield Lab								
o-Chlorotoluene	ND	0.200	--	ND	1.03	--		1
n-Propylbenzene	ND	0.200	--	ND	0.982	--		1
p-Chlorotoluene	ND	0.200	--	ND	1.03	--		1
1,3,5-Trimethylbenzene	ND	0.200	--	ND	0.982	--		1
tert-Butylbenzene	ND	0.200	--	ND	1.10	--		1
1,2,4-Trimethylbenzene	ND	0.200	--	ND	0.982	--		1
1,3-Dichlorobenzene	ND	0.200	--	ND	1.20	--		1
1,4-Dichlorobenzene	ND	0.200	--	ND	1.20	--		1
sec-Butylbenzene	ND	0.200	--	ND	1.10	--		1
p-Isopropyltoluene	ND	0.200	--	ND	1.10	--		1
1,2-Dichlorobenzene	ND	0.200	--	ND	1.20	--		1
n-Butylbenzene	ND	0.200	--	ND	1.10	--		1
1,2-Dibromo-3-chloropropane	ND	0.200	--	ND	1.93	--		1
1,2,4-Trichlorobenzene	ND	0.200	--	ND	1.48	--		1
Naphthalene	ND	0.200	--	ND	1.05	--		1
1,2,3-Trichlorobenzene	ND	0.200	--	ND	1.48	--		1
Hexachlorobutadiene	ND	0.200	--	ND	2.13	--		1

Internal Standard	% Recovery	Qualifier	Acceptance Criteria
1,4-Difluorobenzene	86		60-140
Bromochloromethane	93		60-140
chlorobenzene-d5	85		60-140

Project Name: NEW BEDFORD
Project Number: 115058
Lab Number: L1013128
Report Date: 08/31/10

SAMPLE RESULTS

Lab ID:	L1013128-01	Date Collected:	08/24/10 10:50
Client ID:	(IA 1) A-112-3	Date Received:	08/24/10
Sample Location:	NBHS IAQ	Field Prep:	Not Specified
Matrix:	Air		
Anaytical Method:	101,TO15-SIM		
Analytical Date:	08/26/10 18:45		
Analyst:	AJ		

	ppbV			ug/m3				
Parameter	**Results**	**RL**	**MDL**	**Results**	**RL**	**MDL**	**Qualifier**	**Dilution Factor**
MCP Volatile Organics in Air by SIM - Mansfield Lab								
cis-1,2-Dichloroethene	ND	0.020	--	ND	0.079	--		1
Tetrachloroethene	ND	0.020	--	ND	0.136	--		1
trans-1,2-Dichloroethene	ND	0.020	--	ND	0.079	--		1
Trichloroethene	ND	0.020	--	ND	0.107	--		1
Vinyl chloride	ND	0.020	--	ND	0.051	--		1

Internal Standard	**% Recovery**	**Qualifier**	**Acceptance Criteria**
1,4-difluorobenzene	79		60-140
bromochloromethane	86		60-140
chlorobenzene-d5	81		60-140

Project Name: NEW BEDFORD
Project Number: 115058
Lab Number: L1013128
Report Date: 08/31/10

SAMPLE RESULTS

Lab ID: L1013128-02
Client ID: (IA DUP) A-112-3
Sample Location: NBHS IAQ
Matrix: Air
Anaytical Method: 101,TO-15
Analytical Date: 08/26/10 19:22
Analyst: AJ

Date Collected: 08/24/10 10:50
Date Received: 08/24/10
Field Prep: Not Specified

Parameter	ppbV Results	ppbV RL	ppbV MDL	ug/m3 Results	ug/m3 RL	ug/m3 MDL	Qualifier	Dilution Factor
MCP Volatile Organics in Air - Mansfield Lab								
Dichlorodifluoromethane	0.591	0.200	--	2.92	0.988	--		1
Chloromethane	0.528	0.200	--	1.09	0.413	--		1
Vinyl chloride	ND	0.200	--	ND	0.511	--		1
Bromomethane	ND	0.200	--	ND	0.776	--		1
Chloroethane	ND	0.200	--	ND	0.527	--		1
Acetone	3.46	1.00	--	8.21	2.37	--		1
Trichlorofluoromethane	0.286	0.200	--	1.60	1.12	--		1
Ethyl ether	ND	0.200	--	ND	0.606	--		1
1,1-Dichloroethene	ND	0.200	--	ND	0.792	--		1
Methylene chloride	ND	1.40	--	ND	4.86	--		1
Carbon disulfide	ND	0.200	--	ND	0.622	--		1
trans-1,2-Dichloroethene	ND	0.200	--	ND	0.792	--		1
1,1-Dichloroethane	ND	0.200	--	ND	0.809	--		1
Methyl tert butyl ether	ND	0.200	--	ND	0.720	--		1
2-Butanone	0.213	0.200	--	0.628	0.589	--		1
cis-1,2-Dichloroethene	ND	0.200	--	ND	0.792	--		1
Chloroform	ND	0.200	--	ND	0.976	--		1
Tetrahydrofuran	ND	0.200	--	ND	0.589	--		1
2,2-Dichloropropane	ND	0.200	--	ND	0.923	--		1
1,2-Dichloroethane	ND	0.200	--	ND	0.809	--		1
Isopropyl Ether	ND	0.200	--	ND	0.835	--		1
Ethyl-Tert-Butyl-Ether	ND	0.200	--	ND	0.835	--		1
1,1,1-Trichloroethane	ND	0.200	--	ND	1.09	--		1
1,1-Dichloropropene	ND	0.200	--	ND	0.907	--		1
Benzene	ND	0.200	--	ND	0.638	--		1

Project Name: NEW BEDFORD
Project Number: 115058
Lab Number: L1013128
Report Date: 08/31/10

SAMPLE RESULTS

Lab ID: L1013128-02
Client ID: (IA DUP) A-112-3
Sample Location: NBHS IAQ

Date Collected: 08/24/10 10:50
Date Received: 08/24/10
Field Prep: Not Specified

Parameter	ppbV Results	ppbV RL	ppbV MDL	ug/m3 Results	ug/m3 RL	ug/m3 MDL	Qualifier	Dilution Factor
MCP Volatile Organics in Air - Mansfield Lab								
Carbon tetrachloride	ND	0.200	--	ND	1.26	--		1
Tertiary-Amyl Methyl Ether	ND	0.200	--	ND	0.835	--		1
Dibromomethane	ND	0.200	--	ND	1.42	--		1
1,2-Dichloropropane	ND	0.200	--	ND	0.924	--		1
Bromodichloromethane	ND	0.200	--	ND	1.34	--		1
1,4-Dioxane	ND	0.200	--	ND	0.720	--		1
Trichloroethene	ND	0.200	--	ND	1.07	--		1
cis-1,3-Dichloropropene	ND	0.200	--	ND	0.907	--		1
4-Methyl-2-pentanone	ND	0.200	--	ND	0.819	--		1
trans-1,3-Dichloropropene	ND	0.200	--	ND	0.907	--		1
1,1,2-Trichloroethane	ND	0.200	--	ND	1.09	--		1
Toluene	0.260	0.200	--	0.979	0.753	--		1
1,3-Dichloropropane	ND	0.200	--	ND	0.923	--		1
2-Hexanone	ND	0.200	--	ND	0.819	--		1
Dibromochloromethane	ND	0.200	--	ND	1.70	--		1
1,2-Dibromoethane	ND	0.200	--	ND	1.54	--		1
Tetrachloroethene	ND	0.200	--	ND	1.36	--		1
1,1,1,2-Tetrachloroethane	ND	0.200	--	ND	1.37	--		1
Chlorobenzene	ND	0.200	--	ND	0.920	--		1
Ethylbenzene	ND	0.200	--	ND	0.868	--		1
p/m-Xylene	ND	0.400	--	ND	1.74	--		1
Bromoform	ND	0.200	--	ND	2.06	--		1
Styrene	ND	0.200	--	ND	0.851	--		1
1,1,2,2-Tetrachloroethane	ND	0.200	--	ND	1.37	--		1
o-Xylene	ND	0.200	--	ND	0.868	--		1
1,2,3-Trichloropropane	ND	0.200	--	ND	1.20	--		1
Isopropylbenzene	ND	0.200	--	ND	0.982	--		1
Bromobenzene	ND	0.200	--	ND	1.28	--		1

Project Name: NEW BEDFORD
Project Number: 115058
Lab Number: L1013128
Report Date: 08/31/10

SAMPLE RESULTS

Lab ID: L1013128-02
Client ID: (IA DUP) A-112-3
Sample Location: NBHS IAQ

Date Collected: 08/24/10 10:50
Date Received: 08/24/10
Field Prep: Not Specified

Parameter	ppbV Results	ppbV RL	ppbV MDL	ug/m3 Results	ug/m3 RL	ug/m3 MDL	Qualifier	Dilution Factor
MCP Volatile Organics in Air - Mansfield Lab								
o-Chlorotoluene	ND	0.200	--	ND	1.03	--		1
n-Propylbenzene	ND	0.200	--	ND	0.982	--		1
p-Chlorotoluene	ND	0.200	--	ND	1.03	--		1
1,3,5-Trimethylbenzene	ND	0.200	--	ND	0.982	--		1
tert-Butylbenzene	ND	0.200	--	ND	1.10	--		1
1,2,4-Trimethylbenzene	ND	0.200	--	ND	0.982	--		1
1,3-Dichlorobenzene	ND	0.200	--	ND	1.20	--		1
1,4-Dichlorobenzene	ND	0.200	--	ND	1.20	--		1
sec-Butylbenzene	ND	0.200	--	ND	1.10	--		1
p-Isopropyltoluene	ND	0.200	--	ND	1.10	--		1
1,2-Dichlorobenzene	ND	0.200	--	ND	1.20	--		1
n-Butylbenzene	ND	0.200	--	ND	1.10	--		1
1,2-Dibromo-3-chloropropane	ND	0.200	--	ND	1.93	--		1
1,2,4-Trichlorobenzene	ND	0.200	--	ND	1.48	--		1
Naphthalene	ND	0.200	--	ND	1.05	--		1
1,2,3-Trichlorobenzene	ND	0.200	--	ND	1.48	--		1
Hexachlorobutadiene	ND	0.200	--	ND	2.13	--		1

Internal Standard	% Recovery	Qualifier	Acceptance Criteria
1,4-Difluorobenzene	82		60-140
Bromochloromethane	80		60-140
chlorobenzene-d5	85		60-140

Project Name: NEW BEDFORD
Project Number: 115058
Lab Number: L1013128
Report Date: 08/31/10

SAMPLE RESULTS

Lab ID:	L1013128-02	Date Collected:	08/24/10 10:50
Client ID:	(IA DUP) A-112-3	Date Received:	08/24/10
Sample Location:	NBHS IAQ	Field Prep:	Not Specified
Matrix:	Air		
Anaytical Method:	101,TO15-SIM		
Analytical Date:	08/26/10 19:22		
Analyst:	AJ		

	ppbV			ug/m3				
Parameter	**Results**	**RL**	**MDL**	**Results**	**RL**	**MDL**	**Qualifier**	**Dilution Factor**
MCP Volatile Organics in Air by SIM - Mansfield Lab								
cis-1,2-Dichloroethene	ND	0.020	--	ND	0.079	--		1
Tetrachloroethene	ND	0.020	--	ND	0.136	--		1
trans-1,2-Dichloroethene	ND	0.020	--	ND	0.079	--		1
Trichloroethene	ND	0.020	--	ND	0.107	--		1
Vinyl chloride	ND	0.020	--	ND	0.051	--		1

Internal Standard	**% Recovery**	**Qualifier**	**Acceptance Criteria**
1,4-difluorobenzene	77		60-140
bromochloromethane	71		60-140
chlorobenzene-d5	80		60-140

Project Name: NEW BEDFORD
Project Number: 115058
Lab Number: L1013128
Report Date: 08/31/10

SAMPLE RESULTS

Lab ID: L1013128-03
Client ID: (IA 2) B-114
Sample Location: NBHS IAQ
Matrix: Air
Anaytical Method: 101,TO-15
Analytical Date: 08/26/10 19:59
Analyst: AJ

Date Collected: 08/24/10 11:05
Date Received: 08/24/10
Field Prep: Not Specified

Parameter	ppbV Results	ppbV RL	ppbV MDL	ug/m3 Results	ug/m3 RL	ug/m3 MDL	Qualifier	Dilution Factor
MCP Volatile Organics in Air - Mansfield Lab								
Dichlorodifluoromethane	0.630	0.200	--	3.11	0.988	--		1
Chloromethane	0.535	0.200	--	1.10	0.413	--		1
Vinyl chloride	ND	0.200	--	ND	0.511	--		1
Bromomethane	ND	0.200	--	ND	0.776	--		1
Chloroethane	ND	0.200	--	ND	0.527	--		1
Acetone	3.31	1.00	--	7.86	2.37	--		1
Trichlorofluoromethane	0.324	0.200	--	1.82	1.12	--		1
Ethyl ether	ND	0.200	--	ND	0.606	--		1
1,1-Dichloroethene	ND	0.200	--	ND	0.792	--		1
Methylene chloride	ND	1.40	--	ND	4.86	--		1
Carbon disulfide	ND	0.200	--	ND	0.622	--		1
trans-1,2-Dichloroethene	ND	0.200	--	ND	0.792	--		1
1,1-Dichloroethane	ND	0.200	--	ND	0.809	--		1
Methyl tert butyl ether	ND	0.200	--	ND	0.720	--		1
2-Butanone	1.03	0.200	--	3.04	0.589	--		1
cis-1,2-Dichloroethene	ND	0.200	--	ND	0.792	--		1
Chloroform	0.480	0.200	--	2.34	0.976	--		1
Tetrahydrofuran	ND	0.200	--	ND	0.589	--		1
2,2-Dichloropropane	ND	0.200	--	ND	0.923	--		1
1,2-Dichloroethane	ND	0.200	--	ND	0.809	--		1
Isopropyl Ether	ND	0.200	--	ND	0.835	--		1
Ethyl-Tert-Butyl-Ether	ND	0.200	--	ND	0.835	--		1
1,1,1-Trichloroethane	0.241	0.200	--	1.31	1.09	--		1
1,1-Dichloropropene	ND	0.200	--	ND	0.907	--		1
Benzene	0.477	0.200	--	1.52	0.638	--		1

Project Name: NEW BEDFORD
Project Number: 115058
Lab Number: L1013128
Report Date: 08/31/10

SAMPLE RESULTS

Lab ID: L1013128-03
Client ID: (IA 2) B-114
Sample Location: NBHS IAQ

Date Collected: 08/24/10 11:05
Date Received: 08/24/10
Field Prep: Not Specified

Parameter	ppbV Results	ppbV RL	ppbV MDL	ug/m3 Results	ug/m3 RL	ug/m3 MDL	Qualifier	Dilution Factor
MCP Volatile Organics in Air - Mansfield Lab								
Carbon tetrachloride	ND	0.200	--	ND	1.26	--		1
Tertiary-Amyl Methyl Ether	ND	0.200	--	ND	0.835	--		1
Dibromomethane	ND	0.200	--	ND	1.42	--		1
1,2-Dichloropropane	ND	0.200	--	ND	0.924	--		1
Bromodichloromethane	ND	0.200	--	ND	1.34	--		1
1,4-Dioxane	ND	0.200	--	ND	0.720	--		1
Trichloroethene	ND	0.200	--	ND	1.07	--		1
cis-1,3-Dichloropropene	ND	0.200	--	ND	0.907	--		1
4-Methyl-2-pentanone	0.214	0.200	--	0.876	0.819	--		1
trans-1,3-Dichloropropene	ND	0.200	--	ND	0.907	--		1
1,1,2-Trichloroethane	ND	0.200	--	ND	1.09	--		1
Toluene	2.51	0.200	--	9.47	0.753	--		1
1,3-Dichloropropane	ND	0.200	--	ND	0.923	--		1
2-Hexanone	ND	0.200	--	ND	0.819	--		1
Dibromochloromethane	ND	0.200	--	ND	1.70	--		1
1,2-Dibromoethane	ND	0.200	--	ND	1.54	--		1
Tetrachloroethene	ND	0.200	--	ND	1.36	--		1
1,1,1,2-Tetrachloroethane	ND	0.200	--	ND	1.37	--		1
Chlorobenzene	ND	0.200	--	ND	0.920	--		1
Ethylbenzene	0.329	0.200	--	1.43	0.868	--		1
p/m-Xylene	1.41	0.400	--	6.13	1.74	--		1
Bromoform	ND	0.200	--	ND	2.06	--		1
Styrene	ND	0.200	--	ND	0.851	--		1
1,1,2,2-Tetrachloroethane	ND	0.200	--	ND	1.37	--		1
o-Xylene	0.439	0.200	--	1.90	0.868	--		1
1,2,3-Trichloropropane	ND	0.200	--	ND	1.20	--		1
Isopropylbenzene	ND	0.200	--	ND	0.982	--		1
Bromobenzene	ND	0.200	--	ND	1.28	--		1

Project Name: NEW BEDFORD
Project Number: 115058
Lab Number: L1013128
Report Date: 08/31/10

SAMPLE RESULTS

Lab ID: L1013128-03
Client ID: (IA 2) B-114
Sample Location: NBHS IAQ

Date Collected: 08/24/10 11:05
Date Received: 08/24/10
Field Prep: Not Specified

Parameter	ppbV Results	ppbV RL	ppbV MDL	ug/m3 Results	ug/m3 RL	ug/m3 MDL	Qualifier	Dilution Factor
MCP Volatile Organics in Air - Mansfield Lab								
o-Chlorotoluene	ND	0.200	--	ND	1.03	--		1
n-Propylbenzene	ND	0.200	--	ND	0.982	--		1
p-Chlorotoluene	ND	0.200	--	ND	1.03	--		1
1,3,5-Trimethylbenzene	ND	0.200	--	ND	0.982	--		1
tert-Butylbenzene	ND	0.200	--	ND	1.10	--		1
1,2,4-Trimethylbenzene	0.480	0.200	--	2.36	0.982	--		1
1,3-Dichlorobenzene	ND	0.200	--	ND	1.20	--		1
1,4-Dichlorobenzene	ND	0.200	--	ND	1.20	--		1
sec-Butylbenzene	ND	0.200	--	ND	1.10	--		1
p-Isopropyltoluene	ND	0.200	--	ND	1.10	--		1
1,2-Dichlorobenzene	ND	0.200	--	ND	1.20	--		1
n-Butylbenzene	ND	0.200	--	ND	1.10	--		1
1,2-Dibromo-3-chloropropane	ND	0.200	--	ND	1.93	--		1
1,2,4-Trichlorobenzene	ND	0.200	--	ND	1.48	--		1
Naphthalene	ND	0.200	--	ND	1.05	--		1
1,2,3-Trichlorobenzene	ND	0.200	--	ND	1.48	--		1
Hexachlorobutadiene	ND	0.200	--	ND	2.13	--		1

Internal Standard	% Recovery	Qualifier	Acceptance Criteria
1,4-Difluorobenzene	83		60-140
Bromochloromethane	79		60-140
chlorobenzene-d5	83		60-140

Project Name: NEW BEDFORD
Project Number: 115058
Lab Number: L1013128
Report Date: 08/31/10

SAMPLE RESULTS

Lab ID:	L1013128-03	Date Collected:	08/24/10 11:05
Client ID:	(IA 2) B-114	Date Received:	08/24/10
Sample Location:	NBHS IAQ	Field Prep:	Not Specified
Matrix:	Air		
Anaytical Method:	101,TO15-SIM		
Analytical Date:	08/26/10 19:59		
Analyst:	AJ		

	ppbV			ug/m3				
Parameter	**Results**	**RL**	**MDL**	**Results**	**RL**	**MDL**	**Qualifier**	**Dilution Factor**
MCP Volatile Organics in Air by SIM - Mansfield Lab								
cis-1,2-Dichloroethene	0.026	0.020	--	0.103	0.079	--		1
Tetrachloroethene	ND	0.020	--	ND	0.136	--		1
trans-1,2-Dichloroethene	0.058	0.020	--	0.230	0.079	--		1
Trichloroethene	0.038	0.020	--	0.204	0.107	--		1
Vinyl chloride	ND	0.020	--	ND	0.051	--		1

Internal Standard	**% Recovery**	**Qualifier**	**Acceptance Criteria**
1,4-difluorobenzene	78		60-140
bromochloromethane	71		60-140
chlorobenzene-d5	79		60-140

Project Name: NEW BEDFORD
Project Number: 115058
Lab Number: L1013128
Report Date: 08/31/10

SAMPLE RESULTS

Lab ID: L1013128-04
Client ID: (IA 3) D-120
Sample Location: NBHS IAQ
Matrix: Air
Anaytical Method: 101,TO-15
Analytical Date: 08/26/10 21:15
Analyst: AJ

Date Collected: 08/24/10 11:30
Date Received: 08/24/10
Field Prep: Not Specified

Parameter	ppbV Results	ppbV RL	ppbV MDL	ug/m3 Results	ug/m3 RL	ug/m3 MDL	Qualifier	Dilution Factor
MCP Volatile Organics in Air - Mansfield Lab								
Dichlorodifluoromethane	0.619	0.200	--	3.06	0.988	--		1
Chloromethane	0.597	0.200	--	1.23	0.413	--		1
Vinyl chloride	ND	0.200	--	ND	0.511	--		1
Bromomethane	ND	0.200	--	ND	0.776	--		1
Chloroethane	ND	0.200	--	ND	0.527	--		1
Acetone	4.17	1.00	--	9.90	2.37	--		1
Trichlorofluoromethane	0.362	0.200	--	2.03	1.12	--		1
Ethyl ether	ND	0.200	--	ND	0.606	--		1
1,1-Dichloroethene	ND	0.200	--	ND	0.792	--		1
Methylene chloride	ND	1.40	--	ND	4.86	--		1
Carbon disulfide	ND	0.200	--	ND	0.622	--		1
trans-1,2-Dichloroethene	ND	0.200	--	ND	0.792	--		1
1,1-Dichloroethane	ND	0.200	--	ND	0.809	--		1
Methyl tert butyl ether	ND	0.200	--	ND	0.720	--		1
2-Butanone	0.609	0.200	--	1.79	0.589	--		1
cis-1,2-Dichloroethene	ND	0.200	--	ND	0.792	--		1
Chloroform	ND	0.200	--	ND	0.976	--		1
Tetrahydrofuran	ND	0.200	--	ND	0.589	--		1
2,2-Dichloropropane	ND	0.200	--	ND	0.923	--		1
1,2-Dichloroethane	ND	0.200	--	ND	0.809	--		1
Isopropyl Ether	ND	0.200	--	ND	0.835	--		1
Ethyl-Tert-Butyl-Ether	ND	0.200	--	ND	0.835	--		1
1,1,1-Trichloroethane	ND	0.200	--	ND	1.09	--		1
1,1-Dichloropropene	ND	0.200	--	ND	0.907	--		1
Benzene	ND	0.200	--	ND	0.638	--		1

Project Name: NEW BEDFORD
Project Number: 115058
Lab Number: L1013128
Report Date: 08/31/10

SAMPLE RESULTS

Lab ID: L1013128-04
Client ID: (IA 3) D-120
Sample Location: NBHS IAQ

Date Collected: 08/24/10 11:30
Date Received: 08/24/10
Field Prep: Not Specified

Parameter	ppbV Results	ppbV RL	ppbV MDL	ug/m3 Results	ug/m3 RL	ug/m3 MDL	Qualifier	Dilution Factor
MCP Volatile Organics in Air - Mansfield Lab								
Carbon tetrachloride	ND	0.200	--	ND	1.26	--		1
Tertiary-Amyl Methyl Ether	ND	0.200	--	ND	0.835	--		1
Dibromomethane	ND	0.200	--	ND	1.42	--		1
1,2-Dichloropropane	ND	0.200	--	ND	0.924	--		1
Bromodichloromethane	ND	0.200	--	ND	1.34	--		1
1,4-Dioxane	ND	0.200	--	ND	0.720	--		1
Trichloroethene	ND	0.200	--	ND	1.07	--		1
cis-1,3-Dichloropropene	ND	0.200	--	ND	0.907	--		1
4-Methyl-2-pentanone	ND	0.200	--	ND	0.819	--		1
trans-1,3-Dichloropropene	ND	0.200	--	ND	0.907	--		1
1,1,2-Trichloroethane	ND	0.200	--	ND	1.09	--		1
Toluene	0.941	0.200	--	3.54	0.753	--		1
1,3-Dichloropropane	ND	0.200	--	ND	0.923	--		1
2-Hexanone	ND	0.200	--	ND	0.819	--		1
Dibromochloromethane	ND	0.200	--	ND	1.70	--		1
1,2-Dibromoethane	ND	0.200	--	ND	1.54	--		1
Tetrachloroethene	ND	0.200	--	ND	1.36	--		1
1,1,1,2-Tetrachloroethane	ND	0.200	--	ND	1.37	--		1
Chlorobenzene	ND	0.200	--	ND	0.920	--		1
Ethylbenzene	ND	0.200	--	ND	0.868	--		1
p/m-Xylene	0.555	0.400	--	2.41	1.74	--		1
Bromoform	ND	0.200	--	ND	2.06	--		1
Styrene	ND	0.200	--	ND	0.851	--		1
1,1,2,2-Tetrachloroethane	ND	0.200	--	ND	1.37	--		1
o-Xylene	ND	0.200	--	ND	0.868	--		1
1,2,3-Trichloropropane	ND	0.200	--	ND	1.20	--		1
Isopropylbenzene	ND	0.200	--	ND	0.982	--		1
Bromobenzene	ND	0.200	--	ND	1.28	--		1

Project Name: NEW BEDFORD
Project Number: 115058
Lab Number: L1013128
Report Date: 08/31/10

SAMPLE RESULTS

Lab ID: L1013128-04
Client ID: (IA 3) D-120
Sample Location: NBHS IAQ

Date Collected: 08/24/10 11:30
Date Received: 08/24/10
Field Prep: Not Specified

Parameter	ppbV Results	ppbV RL	ppbV MDL	ug/m3 Results	ug/m3 RL	ug/m3 MDL	Qualifier	Dilution Factor
MCP Volatile Organics in Air - Mansfield Lab								
o-Chlorotoluene	ND	0.200	--	ND	1.03	--		1
n-Propylbenzene	ND	0.200	--	ND	0.982	--		1
p-Chlorotoluene	ND	0.200	--	ND	1.03	--		1
1,3,5-Trimethylbenzene	ND	0.200	--	ND	0.982	--		1
tert-Butylbenzene	ND	0.200	--	ND	1.10	--		1
1,2,4-Trimethylbenzene	ND	0.200	--	ND	0.982	--		1
1,3-Dichlorobenzene	ND	0.200	--	ND	1.20	--		1
1,4-Dichlorobenzene	ND	0.200	--	ND	1.20	--		1
sec-Butylbenzene	ND	0.200	--	ND	1.10	--		1
p-Isopropyltoluene	ND	0.200	--	ND	1.10	--		1
1,2-Dichlorobenzene	ND	0.200	--	ND	1.20	--		1
n-Butylbenzene	ND	0.200	--	ND	1.10	--		1
1,2-Dibromo-3-chloropropane	ND	0.200	--	ND	1.93	--		1
1,2,4-Trichlorobenzene	ND	0.200	--	ND	1.48	--		1
Naphthalene	ND	0.200	--	ND	1.05	--		1
1,2,3-Trichlorobenzene	ND	0.200	--	ND	1.48	--		1
Hexachlorobutadiene	ND	0.200	--	ND	2.13	--		1

Internal Standard	% Recovery	Qualifier	Acceptance Criteria
1,4-Difluorobenzene	81		60-140
Bromochloromethane	78		60-140
chlorobenzene-d5	84		60-140

Project Name: NEW BEDFORD
Project Number: 115058
Lab Number: L1013128
Report Date: 08/31/10

SAMPLE RESULTS

Lab ID:	L1013128-04	Date Collected:	08/24/10 11:30
Client ID:	(IA 3) D-120	Date Received:	08/24/10
Sample Location:	NBHS IAQ	Field Prep:	Not Specified
Matrix:	Air		
Anaytical Method:	101,TO15-SIM		
Analytical Date:	08/26/10 21:15		
Analyst:	AJ		

	ppbV			ug/m3				
Parameter	**Results**	**RL**	**MDL**	**Results**	**RL**	**MDL**	**Qualifier**	**Dilution Factor**
MCP Volatile Organics in Air by SIM - Mansfield Lab								
cis-1,2-Dichloroethene	ND	0.020	--	ND	0.079	--		1
Tetrachloroethene	0.020	0.020	--	0.136	0.136	--		1
trans-1,2-Dichloroethene	ND	0.020	--	ND	0.079	--		1
Trichloroethene	ND	0.020	--	ND	0.107	--		1
Vinyl chloride	ND	0.020	--	ND	0.051	--		1

Internal Standard	**% Recovery**	**Qualifier**	**Acceptance Criteria**
1,4-difluorobenzene	75		60-140
bromochloromethane	70		60-140
chlorobenzene-d5	80		60-140

Project Name: NEW BEDFORD
Project Number: 115058
Lab Number: L1013128
Report Date: 08/31/10

Method Blank Analysis
Batch Quality Control

Analytical Method: 101,TO-15
Analytical Date: 08/26/10 13:22

Parameter	ppbV Results	ppbV RL	ppbV MDL	ug/m3 Results	ug/m3 RL	ug/m3 MDL	Qualifier	Dilution Factor
MCP Volatile Organics in Air - Mansfield Lab for sample(s): 01-04 Batch: WG429574-4								
Dichlorodifluoromethane	ND	0.200	--	ND	0.988	--		1
Chloromethane	ND	0.200	--	ND	0.413	--		1
Vinyl chloride	ND	0.200	--	ND	0.511	--		1
Bromomethane	ND	0.200	--	ND	0.776	--		1
Chloroethane	ND	0.200	--	ND	0.527	--		1
Acetone	ND	1.00	--	ND	2.37	--		1
Trichlorofluoromethane	ND	0.200	--	ND	1.12	--		1
Ethyl ether	ND	0.200	--	ND	0.606	--		1
1,1-Dichloroethene	ND	0.200	--	ND	0.792	--		1
Methylene chloride	ND	1.40	--	ND	4.86	--		1
Carbon disulfide	ND	0.200	--	ND	0.622	--		1
trans-1,2-Dichloroethene	ND	0.200	--	ND	0.792	--		1
1,1-Dichloroethane	ND	0.200	--	ND	0.809	--		1
Methyl tert butyl ether	ND	0.200	--	ND	0.720	--		1
2-Butanone	ND	0.200	--	ND	0.589	--		1
cis-1,2-Dichloroethene	ND	0.200	--	ND	0.792	--		1
Chloroform	ND	0.200	--	ND	0.976	--		1
Tetrahydrofuran	ND	0.200	--	ND	0.589	--		1
2,2-Dichloropropane	ND	0.200	--	ND	0.923	--		1
1,2-Dichloroethane	ND	0.200	--	ND	0.809	--		1
Isopropyl Ether	ND	0.200	--	ND	0.835	--		1
Ethyl-Tert-Butyl-Ether	ND	0.200	--	ND	0.835	--		1
1,1,1-Trichloroethane	ND	0.200	--	ND	1.09	--		1
1,1-Dichloropropene	ND	0.200	--	ND	0.907	--		1
Benzene	ND	0.200	--	ND	0.638	--		1

Project Name: NEW BEDFORD
Project Number: 115058

Lab Number: L1013128
Report Date: 08/31/10

Method Blank Analysis
Batch Quality Control

Analytical Method: 101,TO-15
Analytical Date: 08/26/10 13:22

Parameter	ppbV Results	ppbV RL	ppbV MDL	ug/m3 Results	ug/m3 RL	ug/m3 MDL	Qualifier	Dilution Factor
MCP Volatile Organics in Air - Mansfield Lab for sample(s): 01-04 Batch: WG429574-4								
Carbon tetrachloride	ND	0.200	--	ND	1.26	--		1
Tertiary-Amyl Methyl Ether	ND	0.200	--	ND	0.835	--		1
Dibromomethane	ND	0.200	--	ND	1.42	--		1
1,2-Dichloropropane	ND	0.200	--	ND	0.924	--		1
Bromodichloromethane	ND	0.200	--	ND	1.34	--		1
1,4-Dioxane	ND	0.200	--	ND	0.720	--		1
Trichloroethene	ND	0.200	--	ND	1.07	--		1
cis-1,3-Dichloropropene	ND	0.200	--	ND	0.907	--		1
4-Methyl-2-pentanone	ND	0.200	--	ND	0.819	--		1
trans-1,3-Dichloropropene	ND	0.200	--	ND	0.907	--		1
1,1,2-Trichloroethane	ND	0.200	--	ND	1.09	--		1
Toluene	ND	0.200	--	ND	0.753	--		1
1,3-Dichloropropane	ND	0.200	--	ND	0.923	--		1
2-Hexanone	ND	0.200	--	ND	0.819	--		1
Dibromochloromethane	ND	0.200	--	ND	1.70	--		1
1,2-Dibromoethane	ND	0.200	--	ND	1.54	--		1
Tetrachloroethene	ND	0.200	--	ND	1.36	--		1
1,1,1,2-Tetrachloroethane	ND	0.200	--	ND	1.37	--		1
Chlorobenzene	ND	0.200	--	ND	0.920	--		1
Ethylbenzene	ND	0.200	--	ND	0.868	--		1
p/m-Xylene	ND	0.400	--	ND	1.74	--		1
Bromoform	ND	0.200	--	ND	2.06	--		1
Styrene	ND	0.200	--	ND	0.851	--		1
1,1,2,2-Tetrachloroethane	ND	0.200	--	ND	1.37	--		1
o-Xylene	ND	0.200	--	ND	0.868	--		1

Project Name: NEW BEDFORD
Project Number: 115058
Lab Number: L1013128
Report Date: 08/31/10

Method Blank Analysis
Batch Quality Control

Analytical Method: 101,TO-15
Analytical Date: 08/26/10 13:22

Parameter	ppbV Results	ppbV RL	ppbV MDL	ug/m3 Results	ug/m3 RL	ug/m3 MDL	Qualifier	Dilution Factor
MCP Volatile Organics in Air - Mansfield Lab for sample(s): 01-04 Batch: WG429574-4								
1,2,3-Trichloropropane	ND	0.200	--	ND	1.20	--		1
Isopropylbenzene	ND	0.200	--	ND	0.982	--		1
Bromobenzene	ND	0.200	--	ND	1.28	--		1
o-Chlorotoluene	ND	0.200	--	ND	1.03	--		1
n-Propylbenzene	ND	0.200	--	ND	0.982	--		1
p-Chlorotoluene	ND	0.200	--	ND	1.03	--		1
1,3,5-Trimethylbenzene	ND	0.200	--	ND	0.982	--		1
tert-Butylbenzene	ND	0.200	--	ND	1.10	--		1
1,2,4-Trimethylbenzene	ND	0.200	--	ND	0.982	--		1
1,3-Dichlorobenzene	ND	0.200	--	ND	1.20	--		1
1,4-Dichlorobenzene	ND	0.200	--	ND	1.20	--		1
sec-Butylbenzene	ND	0.200	--	ND	1.10	--		1
p-Isopropyltoluene	ND	0.200	--	ND	1.10	--		1
1,2-Dichlorobenzene	ND	0.200	--	ND	1.20	--		1
n-Butylbenzene	ND	0.200	--	ND	1.10	--		1
1,2-Dibromo-3-chloropropane	ND	0.200	--	ND	1.93	--		1
1,2,4-Trichlorobenzene	ND	0.200	--	ND	1.48	--		1
Naphthalene	ND	0.200	--	ND	1.05	--		1
1,2,3-Trichlorobenzene	ND	0.200	--	ND	1.48	--		1
Hexachlorobutadiene	ND	0.200	--	ND	2.13	--		1

Project Name: NEW BEDFORD
Project Number: 115058

Lab Number: L1013128
Report Date: 08/31/10

Method Blank Analysis
Batch Quality Control

Analytical Method: 101,TO15-SIM
Analytical Date: 08/26/10 13:22

Parameter	ppbV Results	ppbV RL	ppbV MDL	ug/m3 Results	ug/m3 RL	ug/m3 MDL	Qualifier	Dilution Factor
MCP Volatile Organics in Air by SIM - Mansfield Lab for sample(s): 01-04 Batch: WG429575-4								
cis-1,2-Dichloroethene	ND	0.020	--	ND	0.079	--		1
Tetrachloroethene	ND	0.020	--	ND	0.136	--		1
trans-1,2-Dichloroethene	ND	0.020	--	ND	0.079	--		1
Trichloroethene	ND	0.020	--	ND	0.107	--		1
Vinyl chloride	ND	0.020	--	ND	0.051	--		1

Lab Control Sample Analysis
Batch Quality Control

Project Name: NEW BEDFORD
Project Number: 115058

Lab Number: L1013128
Report Date: 08/31/10

Parameter	LCS %Recovery	Qual	LCSD %Recovery	Qual	%Recovery Limits	RPD	Qual	RPD Limits
MCP Volatile Organics in Air - Mansfield Lab Associated sample(s): 01-04 Batch: WG429574-3								
Dichlorodifluoromethane	97		-		70-130	-		
Chloromethane	79		-		70-130	-		
Vinyl chloride	80		-		70-130	-		
Bromomethane	87		-		70-130	-		
Chloroethane	91		-		70-130	-		
Acetone	112		-		50-150	-		
Trichlorofluoromethane	104		-		70-130	-		
Ethyl ether	87		-		70-130	-		
1,1-Dichloroethene	98		-		70-130	-		
Methylene chloride	107		-		70-130	-		
Carbon disulfide	93		-		70-130	-		
trans-1,2-Dichloroethene	96		-		70-130	-		
1,1-Dichloroethane	106		-		70-130	-		
Methyl tert butyl ether	94		-		70-130	-		
2-Butanone	111		-		70-130	-		
cis-1,2-Dichloroethene	96		-		70-130	-		
Chloroform	107		-		70-130	-		
Tetrahydrofuran	84		-		70-130	-		
2,2-Dichloropropane	97		-		70-130	-		
1,2-Dichloroethane	110		-		70-130	-		
Isopropyl Ether	95		-		70-130	-		

Lab Control Sample Analysis
Batch Quality Control

Project Name: NEW BEDFORD
Project Number: 115058

Lab Number: L1013128
Report Date: 08/31/10

Parameter	LCS %Recovery	Qual	LCSD %Recovery	Qual	%Recovery Limits	RPD	Qual	RPD Limits
MCP Volatile Organics in Air - Mansfield Lab Associated sample(s): 01-04 Batch: WG429574-3								
Ethyl-Tert-Butyl-Ether	92		-		70-130	-		
1,1,1-Trichloroethane	109		-		70-130	-		
1,1-Dichloropropene	90		-		70-130	-		
Benzene	98		-		70-130	-		
Carbon tetrachloride	110		-		70-130	-		
Tertiary-Amyl Methyl Ether	86		-		70-130	-		
Dibromomethane	97		-		70-130	-		
1,2-Dichloropropane	100		-		70-130	-		
Bromodichloromethane	107		-		70-130	-		
1,4-Dioxane	97		-		50-150	-		
Trichloroethene	99		-		70-130	-		
cis-1,3-Dichloropropene	104		-		70-130	-		
4-Methyl-2-pentanone	113		-		70-130	-		
trans-1,3-Dichloropropene	91		-		70-130	-		
1,1,2-Trichloroethane	109		-		70-130	-		
Toluene	91		-		70-130	-		
1,3-Dichloropropane	89		-		70-130	-		
2-Hexanone	102		-		70-130	-		
Dibromochloromethane	104		-		70-130	-		
1,2-Dibromoethane	96		-		70-130	-		
Tetrachloroethene	94		-		70-130	-		

Lab Control Sample Analysis
Batch Quality Control

Project Name: NEW BEDFORD
Project Number: 115058

Lab Number: L1013128
Report Date: 08/31/10

Parameter	LCS %Recovery	Qual	LCSD %Recovery	Qual	%Recovery Limits	RPD	Qual	RPD Limits
MCP Volatile Organics in Air - Mansfield Lab Associated sample(s): 01-04 Batch: WG429574-3								
1,1,1,2-Tetrachloroethane	92		-		70-130	-		
Chlorobenzene	97		-		70-130	-		
Ethylbenzene	94		-		70-130	-		
p/m-Xylene	98		-		70-130	-		
Bromoform	102		-		70-130	-		
Styrene	93		-		70-130	-		
1,1,2,2-Tetrachloroethane	104		-		70-130	-		
o-Xylene	100		-		70-130	-		
1,2,3-Trichloropropane	92		-		70-130	-		
Isopropylbenzene	94		-		70-130	-		
Bromobenzene	99		-		70-130	-		
o-Chlorotoluene	92		-		70-130	-		
n-Propylbenzene	94		-		70-130	-		
p-Chlorotoluene	97		-		70-130	-		
1,3,5-Trimethylbenzene	102		-		70-130	-		
tert-Butylbenzene	98		-		70-130	-		
1,2,4-Trimethylbenzene	109		-		70-130	-		
1,3-Dichlorobenzene	108		-		70-130	-		
1,4-Dichlorobenzene	108		-		70-130	-		
sec-Butylbenzene	98		-		70-130	-		
p-Isopropyltoluene	95		-		70-130	-		

Lab Control Sample Analysis
Batch Quality Control

Project Name: NEW BEDFORD
Project Number: 115058

Lab Number: L1013128
Report Date: 08/31/10

Parameter	LCS %Recovery	Qual	LCSD %Recovery	Qual	%Recovery Limits	RPD	Qual	RPD Limits
MCP Volatile Organics in Air - Mansfield Lab Associated sample(s): 01-04 Batch: WG429574-3								
1,2-Dichlorobenzene	107		-		70-130	-		
n-Butylbenzene	107		-		70-130	-		
1,2-Dibromo-3-chloropropane	100		-		70-130	-		
1,2,4-Trichlorobenzene	100		-		50-150	-		
Naphthalene	89		-		50-150	-		
1,2,3-Trichlorobenzene	85		-		70-130	-		
Hexachlorobutadiene	96		-		50-150	-		
MCP Volatile Organics in Air by SIM - Mansfield Lab Associated sample(s): 01-04 Batch: WG429575-3								
cis-1,2-Dichloroethene	85		-		70-130	-		
Tetrachloroethene	88		-		70-130	-		
trans-1,2-Dichloroethene	81		-		70-130	-		
Trichloroethene	86		-		70-130	-		
Vinyl chloride	72		-		70-130	-		

Lab Duplicate Analysis
Batch Quality Control

Project Name: NEW BEDFORD
Project Number: 115058

Lab Number: L1013128
Report Date: 08/31/10

Parameter	Native Sample	Duplicate Sample	Units	RPD	Qual	RPD Limits
MCP Volatile Organics in Air - Mansfield Lab Associated sample(s): 01-04 QC Batch ID: WG429574-5 QC Sample: L1013128-03 Client ID: (IA 2) B-114						
Dichlorodifluoromethane	0.630	0.608	ppbV	4		25
Chloromethane	0.535	0.561	ppbV	5		25
Vinyl chloride	ND	ND	ppbV	NC		25
Bromomethane	ND	ND	ppbV	NC		25
Chloroethane	ND	ND	ppbV	NC		25
Acetone	3.31	2.72	ppbV	20		25
Trichlorofluoromethane	0.324	0.333	ppbV	3		25
Ethyl ether	ND	ND	ppbV	NC		25
1,1-Dichloroethene	ND	ND	ppbV	NC		25
Methylene chloride	ND	ND	ppbV	NC		25
Carbon disulfide	ND	ND	ppbV	NC		25
trans-1,2-Dichloroethene	ND	ND	ppbV	NC		25
1,1-Dichloroethane	ND	ND	ppbV	NC		25
Methyl tert butyl ether	ND	ND	ppbV	NC		25
2-Butanone	1.03	0.992	ppbV	4		25
cis-1,2-Dichloroethene	ND	ND	ppbV	NC		25
Chloroform	0.480	0.499	ppbV	4		25
Tetrahydrofuran	ND	ND	ppbV	NC		25
2,2-Dichloropropane	ND	ND	ppbV	NC		25

Lab Duplicate Analysis
Batch Quality Control

Project Name: NEW BEDFORD
Project Number: 115058

Lab Number: L1013128
Report Date: 08/31/10

Parameter	Native Sample	Duplicate Sample	Units	RPD	RPD Limits
MCP Volatile Organics in Air - Mansfield Lab Associated sample(s): 01-04 QC Batch ID: WG429574-5 QC Sample: L1013128-03 Client ID: (IA 2) B-114					
1,2-Dichloroethane	ND	ND	ppbV	NC	25
Isopropyl Ether	ND	ND	ppbV	NC	25
Ethyl-Tert-Butyl-Ether	ND	ND	ppbV	NC	25
1,1,1-Trichloroethane	0.241	0.219	ppbV	10	25
1,1-Dichloropropene	ND	ND	ppbV	NC	25
Benzene	0.477	0.470	ppbV	1	25
Carbon tetrachloride	ND	ND	ppbV	NC	25
Tertiary-Amyl Methyl Ether	ND	ND	ppbV	NC	25
Dibromomethane	ND	ND	ppbV	NC	25
1,2-Dichloropropane	ND	ND	ppbV	NC	25
Bromodichloromethane	ND	ND	ppbV	NC	25
1,4-Dioxane	ND	ND	ppbV	NC	25
Trichloroethene	ND	ND	ppbV	NC	25
cis-1,3-Dichloropropene	ND	ND	ppbV	NC	25
4-Methyl-2-pentanone	0.214	0.203	ppbV	5	25
trans-1,3-Dichloropropene	ND	ND	ppbV	NC	25
1,1,2-Trichloroethane	ND	ND	ppbV	NC	25
Toluene	2.51	2.41	ppbV	4	25
1,3-Dichloropropane	ND	ND	ppbV	NC	25

Lab Duplicate Analysis
Batch Quality Control

Project Name: NEW BEDFORD
Project Number: 115058

Lab Number: L1013128
Report Date: 08/31/10

Parameter	Native Sample	Duplicate Sample	Units	RPD	RPD Limits
MCP Volatile Organics in Air - Mansfield Lab Associated sample(s): 01-04 QC Batch ID: WG429574-5 QC Sample: L1013128-03 Client ID: (IA 2) B-114					
2-Hexanone	ND	ND	ppbV	NC	25
Dibromochloromethane	ND	ND	ppbV	NC	25
1,2-Dibromoethane	ND	ND	ppbV	NC	25
Tetrachloroethene	ND	ND	ppbV	NC	25
1,1,1,2-Tetrachloroethane	ND	ND	ppbV	NC	25
Chlorobenzene	ND	ND	ppbV	NC	25
Ethylbenzene	0.329	0.329	ppbV	0	25
p/m-Xylene	1.41	1.28	ppbV	10	25
Bromoform	ND	ND	ppbV	NC	25
Styrene	ND	ND	ppbV	NC	25
1,1,2,2-Tetrachloroethane	ND	ND	ppbV	NC	25
o-Xylene	0.439	0.436	ppbV	1	25
1,2,3-Trichloropropane	ND	ND	ppbV	NC	25
Isopropylbenzene	ND	ND	ppbV	NC	25
Bromobenzene	ND	ND	ppbV	NC	25
o-Chlorotoluene	ND	ND	ppbV	NC	25
n-Propylbenzene	ND	ND	ppbV	NC	25
p-Chlorotoluene	ND	ND	ppbV	NC	25
1,3,5-Trimethylbenzene	ND	ND	ppbV	NC	25

Lab Duplicate Analysis
Batch Quality Control

Project Name: NEW BEDFORD
Project Number: 115058

Lab Number: L1013128
Report Date: 08/31/10

Parameter	Native Sample	Duplicate Sample	Units	RPD	RPD Limits
MCP Volatile Organics in Air - Mansfield Lab Associated sample(s): 01-04 QC Batch ID: WG429574-5 QC Sample: L1013128-03 Client ID: (IA 2) B-114					
tert-Butylbenzene	ND	ND	ppbV	NC	25
1,2,4-Trimethylbenzene	0.480	0.450	ppbV	6	25
1,3-Dichlorobenzene	ND	ND	ppbV	NC	25
1,4-Dichlorobenzene	ND	ND	ppbV	NC	25
sec-Butylbenzene	ND	ND	ppbV	NC	25
p-Isopropyltoluene	ND	ND	ppbV	NC	25
1,2-Dichlorobenzene	ND	ND	ppbV	NC	25
n-Butylbenzene	ND	ND	ppbV	NC	25
1,2-Dibromo-3-chloropropane	ND	ND	ppbV	NC	25
1,2,4-Trichlorobenzene	ND	ND	ppbV	NC	25
Naphthalene	ND	ND	ppbV	NC	25
1,2,3-Trichlorobenzene	ND	ND	ppbV	NC	25
Hexachlorobutadiene	ND	ND	ppbV	NC	25

Lab Duplicate Analysis
Batch Quality Control

Project Name: NEW BEDFORD
Project Number: 115058

Lab Number: L1013128
Report Date: 08/31/10

Parameter	Native Sample	Duplicate Sample	Units	RPD	RPD Limits
MCP Volatile Organics in Air by SIM - Mansfield Lab Associated sample(s): 01-04 QC Batch ID: WG429575-5 QC Sample: L1013128-03 Client ID: (IA 2) B-114					
cis-1,2-Dichloroethene	0.026	0.027	ppbV	4	25
Tetrachloroethene	ND	ND	ppbV	NC	25
trans-1,2-Dichloroethene	0.058	0.057	ppbV	2	25
Trichloroethene	0.038	0.039	ppbV	3	25
Vinyl chloride	ND	ND	ppbV	NC	25

Project Name: NEW BEDFORD **Lab Number:** L1013128

Project Number: 115058 **Report Date:** 08/31/10

Canister and Flow Controller Information

Samplenum	Client ID	Media ID	Media Type	Cleaning Batch ID	Initial Pressure (in. Hg)	Pressure on Receipt (in. Hg)	Flow Out mL/min	Flow In mL/min	% RSD
L1013128-01	(IA 1) A-112-3	0266	#16 AMB		-	-	3.2	3.3	3
L1013128-01	(IA 1) A-112-3	1628	6.0L Can	L1012729	-29.3	-3.1	-	-	-
L1013128-02	(IA DUP) A-112-3	0133	#16 AMB		-	-	3.3	3.4	3
L1013128-02	(IA DUP) A-112-3	1648	6.0L Can	L1012729	-29.3	-2.7	-	-	-
L1013128-03	(IA 2) B-114	0393	#16 AMB		-	-	3.0	3.2	6
L1013128-03	(IA 2) B-114	633	6.0L Can	L1012729	-29.3	-4.5	-	-	-
L1013128-04	(IA 3) D-120	0346	#16 AMB		-	-	3.3	3.4	3
L1013128-04	(IA 3) D-120	756	6.0L Can	L1012729	-29.3	-2.4	-	-	-

Air Volatiles Can Certification

Project Name: NBHS
Project Number: Not Specified
Lab Number: L1012729
Report Date: 08/31/10

Air Canister Certification Results

Lab ID: L1012729-01
Client ID: CAN 633
Sample Location:
Matrix: Air
Anaytical Method: 48,TO-15
Analytical Date: 08/19/10 01:32
Analyst: RY

Date Collected: 08/18/10 00:00
Date Received: 08/18/10
Field Prep: Not Specified

Parameter	ppbV Results	ppbV RL	ppbV MDL	ug/m3 Results	ug/m3 RL	ug/m3 MDL	Qualifier	Dilution Factor
Volatile Organics in Air (Low Level) - Mansfield Lab								
Propylene	ND	0.200	--	ND	0.344	--		1
Dichlorodifluoromethane	ND	0.200	--	ND	0.988	--		1
Chloromethane	ND	0.200	--	ND	0.413	--		1
Freon-114	ND	0.200	--	ND	1.40	--		1
Vinyl chloride	ND	0.200	--	ND	0.511	--		1
1,3-Butadiene	ND	0.200	--	ND	0.442	--		1
Bromomethane	ND	0.200	--	ND	0.776	--		1
Chloroethane	ND	0.200	--	ND	0.527	--		1
Ethanol	ND	2.50	--	ND	4.71	--		1
Vinyl bromide	ND	0.200	--	ND	0.874	--		1
Acetone	ND	1.00	--	ND	2.37	--		1
Trichlorofluoromethane	ND	0.200	--	ND	1.12	--		1
Isopropanol	ND	0.500	--	ND	1.23	--		1
1,1-Dichloroethene	ND	0.200	--	ND	0.792	--		1
Methylene chloride	ND	1.00	--	ND	3.47	--		1
3-Chloropropene	ND	0.200	--	ND	0.626	--		1
Carbon disulfide	ND	0.200	--	ND	0.622	--		1
Freon-113	ND	0.200	--	ND	1.53	--		1
trans-1,2-Dichloroethene	ND	0.200	--	ND	0.792	--		1
1,1-Dichloroethane	ND	0.200	--	ND	0.809	--		1
Methyl tert butyl ether	ND	0.200	--	ND	0.720	--		1
Vinyl acetate	ND	0.200	--	ND	0.704	--		1
2-Butanone	ND	0.200	--	ND	0.589	--		1
cis-1,2-Dichloroethene	ND	0.200	--	ND	0.792	--		1
Ethyl Acetate	ND	0.500	--	ND	1.80	--		1

Project Name: NBHS
Project Number: Not Specified
Lab Number: L1012729
Report Date: 08/31/10

Air Canister Certification Results

Lab ID: L1012729-01
Client ID: CAN 633
Sample Location:
Date Collected: 08/18/10 00:00
Date Received: 08/18/10
Field Prep: Not Specified

Parameter	ppbV Results	ppbV RL	ppbV MDL	ug/m3 Results	ug/m3 RL	ug/m3 MDL	Qualifier	Dilution Factor
Volatile Organics in Air (Low Level) - Mansfield Lab								
Chloroform	ND	0.200	--	ND	0.976	--		1
Tetrahydrofuran	ND	0.200	--	ND	0.589	--		1
1,2-Dichloroethane	ND	0.200	--	ND	0.809	--		1
n-Hexane	ND	0.200	--	ND	0.704	--		1
1,1,1-Trichloroethane	ND	0.200	--	ND	1.09	--		1
Benzene	ND	0.200	--	ND	0.638	--		1
Carbon tetrachloride	ND	0.200	--	ND	1.26	--		1
Cyclohexane	ND	0.200	--	ND	0.688	--		1
1,2-Dichloropropane	ND	0.200	--	ND	0.924	--		1
Bromodichloromethane	ND	0.200	--	ND	1.34	--		1
1,4-Dioxane	ND	0.200	--	ND	0.720	--		1
Trichloroethene	ND	0.200	--	ND	1.07	--		1
2,2,4-Trimethylpentane	ND	0.200	--	ND	0.934	--		1
Heptane	ND	0.200	--	ND	0.819	--		1
cis-1,3-Dichloropropene	ND	0.200	--	ND	0.907	--		1
4-Methyl-2-pentanone	ND	0.200	--	ND	0.819	--		1
trans-1,3-Dichloropropene	ND	0.200	--	ND	0.907	--		1
1,1,2-Trichloroethane	ND	0.200	--	ND	1.09	--		1
Toluene	ND	0.200	--	ND	0.753	--		1
2-Hexanone	ND	0.200	--	ND	0.819	--		1
Dibromochloromethane	ND	0.200	--	ND	1.70	--		1
1,2-Dibromoethane	ND	0.200	--	ND	1.54	--		1
Tetrachloroethene	ND	0.200	--	ND	1.36	--		1
Chlorobenzene	ND	0.200	--	ND	0.920	--		1
Ethylbenzene	ND	0.200	--	ND	0.868	--		1
p/m-Xylene	ND	0.400	--	ND	1.74	--		1
Bromoform	ND	0.200	--	ND	2.06	--		1
Styrene	ND	0.200	--	ND	0.851	--		1

Project Name: NBHS
Project Number: Not Specified
Lab Number: L1012729
Report Date: 08/31/10

Air Canister Certification Results

Lab ID: L1012729-01
Client ID: CAN 633
Sample Location:
Date Collected: 08/18/10 00:00
Date Received: 08/18/10
Field Prep: Not Specified

Parameter	ppbV Results	ppbV RL	ppbV MDL	ug/m3 Results	ug/m3 RL	ug/m3 MDL	Qualifier	Dilution Factor
Volatile Organics in Air (Low Level) - Mansfield Lab								
1,1,2,2-Tetrachloroethane	ND	0.200	--	ND	1.37	--		1
o-Xylene	ND	0.200	--	ND	0.868	--		1
4-Ethyltoluene	ND	0.200	--	ND	0.982	--		1
1,3,5-Trimethybenzene	ND	0.200	--	ND	0.982	--		1
1,2,4-Trimethylbenzene	ND	0.200	--	ND	0.982	--		1
Benzyl chloride	ND	0.200	--	ND	1.03	--		1
1,3-Dichlorobenzene	ND	0.200	--	ND	1.20	--		1
1,4-Dichlorobenzene	ND	0.200	--	ND	1.20	--		1
1,2-Dichlorobenzene	ND	0.200	--	ND	1.20	--		1
1,2,4-Trichlorobenzene	ND	0.200	--	ND	1.48	--		1
Hexachlorobutadiene	ND	0.200	--	ND	2.13	--		1

Project Name: NBHS
Project Number: Not Specified
Lab Number: L1012729
Report Date: 08/31/10

Air Canister Certification Results

Lab ID: L1012729-01
Client ID: CAN 633
Sample Location:

Date Collected: 08/18/10 00:00
Date Received: 08/18/10
Field Prep: Not Specified

Parameter	ppbV Results	ppbV RL	ppbV MDL	ug/m3 Results	ug/m3 RL	ug/m3 MDL	Qualifier	Dilution Factor
Volatile Organics in Air (Low Level) - Mansfield Lab								

Internal Standard	% Recovery	Qualifier	Acceptance Criteria
1,4-Difluorobenzene	80		60-140
Bromochloromethane	84		60-140
chlorobenzene-d5	87		60-140

Project Name: NBHS
Project Number: Not Specified
Lab Number: L1012729
Report Date: 08/31/10

Air Canister Certification Results

Lab ID: L1012729-01
Client ID: CAN 633
Sample Location:
Matrix: Air
Anaytical Method: 48,TO-15-SIM
Analytical Date: 08/19/10 01:32
Analyst: RY

Date Collected: 08/18/10 00:00
Date Received: 08/18/10
Field Prep: Not Specified

Parameter	ppbV Results	ppbV RL	ppbV MDL	ug/m3 Results	ug/m3 RL	ug/m3 MDL	Qualifier	Dilution Factor
Volatile Organics in Air by SIM - Mansfield Lab								
Vinyl chloride	ND	0.020	--	ND	0.051	--		1
1,1-Dichloroethene	ND	0.020	--	ND	0.079	--		1
trans-1,2-Dichloroethene	ND	0.020	--	ND	0.079	--		1
cis-1,2-Dichloroethene	ND	0.020	--	ND	0.079	--		1
Trichloroethene	ND	0.020	--	ND	0.107	--		1
Tetrachloroethene	ND	0.020	--	ND	0.136	--		1

Project Name: NBHS
Project Number: Not Specified
Lab Number: L1012729
Report Date: 08/31/10

Air Canister Certification Results

Lab ID: L1012729-01
Client ID: CAN 633
Sample Location:
Date Collected: 08/18/10 00:00
Date Received: 08/18/10
Field Prep: Not Specified

Parameter	ppbV Results	ppbV RL	ppbV MDL	ug/m3 Results	ug/m3 RL	ug/m3 MDL	Qualifier	Dilution Factor
Volatile Organics in Air by SIM - Mansfield Lab								

Internal Standard	% Recovery	Qualifier	Acceptance Criteria
1,4-difluorobenzene	77		60-140
bromochloromethane	84		60-140
chlorobenzene-d5	86		60-140

Project Name: NBHS
Project Number: Not Specified
Lab Number: L1012729
Report Date: 08/31/10

Air Canister Certification Results

Lab ID: L1012729-02
Client ID: CAN 756
Sample Location:
Matrix: Air
Anaytical Method: 48,TO-15
Analytical Date: 08/19/10 02:09
Analyst: RY

Date Collected: 08/18/10 00:00
Date Received: 08/18/10
Field Prep: Not Specified

Parameter	ppbV Results	ppbV RL	ppbV MDL	ug/m3 Results	ug/m3 RL	ug/m3 MDL	Qualifier	Dilution Factor
Volatile Organics in Air (Low Level) - Mansfield Lab								
Propylene	ND	0.200	--	ND	0.344	--		1
Dichlorodifluoromethane	ND	0.200	--	ND	0.988	--		1
Chloromethane	ND	0.200	--	ND	0.413	--		1
Freon-114	ND	0.200	--	ND	1.40	--		1
Vinyl chloride	ND	0.200	--	ND	0.511	--		1
1,3-Butadiene	ND	0.200	--	ND	0.442	--		1
Bromomethane	ND	0.200	--	ND	0.776	--		1
Chloroethane	ND	0.200	--	ND	0.527	--		1
Ethanol	ND	2.50	--	ND	4.71	--		1
Vinyl bromide	ND	0.200	--	ND	0.874	--		1
Acetone	ND	1.00	--	ND	2.37	--		1
Trichlorofluoromethane	ND	0.200	--	ND	1.12	--		1
Isopropanol	ND	0.500	--	ND	1.23	--		1
1,1-Dichloroethene	ND	0.200	--	ND	0.792	--		1
Methylene chloride	ND	1.00	--	ND	3.47	--		1
3-Chloropropene	ND	0.200	--	ND	0.626	--		1
Carbon disulfide	ND	0.200	--	ND	0.622	--		1
Freon-113	ND	0.200	--	ND	1.53	--		1
trans-1,2-Dichloroethene	ND	0.200	--	ND	0.792	--		1
1,1-Dichloroethane	ND	0.200	--	ND	0.809	--		1
Methyl tert butyl ether	ND	0.200	--	ND	0.720	--		1
Vinyl acetate	ND	0.200	--	ND	0.704	--		1
2-Butanone	ND	0.200	--	ND	0.589	--		1
cis-1,2-Dichloroethene	ND	0.200	--	ND	0.792	--		1
Ethyl Acetate	ND	0.500	--	ND	1.80	--		1

Project Name: NBHS
Project Number: Not Specified
Lab Number: L1012729
Report Date: 08/31/10

Air Canister Certification Results

Lab ID: L1012729-02
Client ID: CAN 756
Sample Location:
Date Collected: 08/18/10 00:00
Date Received: 08/18/10
Field Prep: Not Specified

Parameter	ppbV Results	ppbV RL	ppbV MDL	ug/m3 Results	ug/m3 RL	ug/m3 MDL	Qualifier	Dilution Factor
Volatile Organics in Air (Low Level) - Mansfield Lab								
Chloroform	ND	0.200	--	ND	0.976	--		1
Tetrahydrofuran	ND	0.200	--	ND	0.589	--		1
1,2-Dichloroethane	ND	0.200	--	ND	0.809	--		1
n-Hexane	ND	0.200	--	ND	0.704	--		1
1,1,1-Trichloroethane	ND	0.200	--	ND	1.09	--		1
Benzene	ND	0.200	--	ND	0.638	--		1
Carbon tetrachloride	ND	0.200	--	ND	1.26	--		1
Cyclohexane	ND	0.200	--	ND	0.688	--		1
1,2-Dichloropropane	ND	0.200	--	ND	0.924	--		1
Bromodichloromethane	ND	0.200	--	ND	1.34	--		1
1,4-Dioxane	ND	0.200	--	ND	0.720	--		1
Trichloroethene	ND	0.200	--	ND	1.07	--		1
2,2,4-Trimethylpentane	ND	0.200	--	ND	0.934	--		1
Heptane	ND	0.200	--	ND	0.819	--		1
cis-1,3-Dichloropropene	ND	0.200	--	ND	0.907	--		1
4-Methyl-2-pentanone	ND	0.200	--	ND	0.819	--		1
trans-1,3-Dichloropropene	ND	0.200	--	ND	0.907	--		1
1,1,2-Trichloroethane	ND	0.200	--	ND	1.09	--		1
Toluene	ND	0.200	--	ND	0.753	--		1
2-Hexanone	ND	0.200	--	ND	0.819	--		1
Dibromochloromethane	ND	0.200	--	ND	1.70	--		1
1,2-Dibromoethane	ND	0.200	--	ND	1.54	--		1
Tetrachloroethene	ND	0.200	--	ND	1.36	--		1
Chlorobenzene	ND	0.200	--	ND	0.920	--		1
Ethylbenzene	ND	0.200	--	ND	0.868	--		1
p/m-Xylene	ND	0.400	--	ND	1.74	--		1
Bromoform	ND	0.200	--	ND	2.06	--		1
Styrene	ND	0.200	--	ND	0.851	--		1

Project Name: NBHS
Project Number: Not Specified
Lab Number: L1012729
Report Date: 08/31/10

Air Canister Certification Results

Lab ID: L1012729-02
Client ID: CAN 756
Sample Location:

Date Collected: 08/18/10 00:00
Date Received: 08/18/10
Field Prep: Not Specified

Parameter	ppbV Results	ppbV RL	ppbV MDL	ug/m3 Results	ug/m3 RL	ug/m3 MDL	Qualifier	Dilution Factor
Volatile Organics in Air (Low Level) - Mansfield Lab								
1,1,2,2-Tetrachloroethane	ND	0.200	--	ND	1.37	--		1
o-Xylene	ND	0.200	--	ND	0.868	--		1
4-Ethyltoluene	ND	0.200	--	ND	0.982	--		1
1,3,5-Trimethybenzene	ND	0.200	--	ND	0.982	--		1
1,2,4-Trimethylbenzene	ND	0.200	--	ND	0.982	--		1
Benzyl chloride	ND	0.200	--	ND	1.03	--		1
1,3-Dichlorobenzene	ND	0.200	--	ND	1.20	--		1
1,4-Dichlorobenzene	ND	0.200	--	ND	1.20	--		1
1,2-Dichlorobenzene	ND	0.200	--	ND	1.20	--		1
1,2,4-Trichlorobenzene	ND	0.200	--	ND	1.48	--		1
Hexachlorobutadiene	ND	0.200	--	ND	2.13	--		1

Project Name: NBHS
Project Number: Not Specified
Lab Number: L1012729
Report Date: 08/31/10

Air Canister Certification Results

Lab ID: L1012729-02
Client ID: CAN 756
Sample Location:

Date Collected: 08/18/10 00:00
Date Received: 08/18/10
Field Prep: Not Specified

Parameter	ppbV Results	ppbV RL	ppbV MDL	ug/m3 Results	ug/m3 RL	ug/m3 MDL	Qualifier	Dilution Factor
Volatile Organics in Air (Low Level) - Mansfield Lab								

Internal Standard	% Recovery	Qualifier	Acceptance Criteria
1,4-Difluorobenzene	82		60-140
Bromochloromethane	85		60-140
chlorobenzene-d5	84		60-140

Project Name: NBHS
Project Number: Not Specified
Lab Number: L1012729
Report Date: 08/31/10

Air Canister Certification Results

Lab ID: L1012729-02
Client ID: CAN 756
Sample Location:
Matrix: Air
Anaytical Method: 48,TO-15-SIM
Analytical Date: 08/19/10 02:09
Analyst: RY

Date Collected: 08/18/10 00:00
Date Received: 08/18/10
Field Prep: Not Specified

Parameter	ppbV Results	ppbV RL	ppbV MDL	ug/m3 Results	ug/m3 RL	ug/m3 MDL	Qualifier	Dilution Factor
Volatile Organics in Air by SIM - Mansfield Lab								
Vinyl chloride	ND	0.020	--	ND	0.051	--		1
1,1-Dichloroethene	ND	0.020	--	ND	0.079	--		1
trans-1,2-Dichloroethene	ND	0.020	--	ND	0.079	--		1
cis-1,2-Dichloroethene	ND	0.020	--	ND	0.079	--		1
Trichloroethene	ND	0.020	--	ND	0.107	--		1
Tetrachloroethene	ND	0.020	--	ND	0.136	--		1

Project Name: NBHS
Project Number: Not Specified
Lab Number: L1012729
Report Date: 08/31/10

Air Canister Certification Results

Lab ID: L1012729-02
Client ID: CAN 756
Sample Location:
Date Collected: 08/18/10 00:00
Date Received: 08/18/10
Field Prep: Not Specified

Parameter	ppbV Results	ppbV RL	ppbV MDL	ug/m3 Results	ug/m3 RL	ug/m3 MDL	Qualifier	Dilution Factor
Volatile Organics in Air by SIM - Mansfield Lab								

Internal Standard	% Recovery	Qualifier	Acceptance Criteria
1,4-difluorobenzene	79		60-140
bromochloromethane	84		60-140
chlorobenzene-d5	84		60-140

Project Name: NBHS
Project Number: Not Specified
Lab Number: L1012729
Report Date: 08/31/10

Air Canister Certification Results

Lab ID: L1012729-03
Client ID: CAN 1648
Sample Location:
Matrix: Air
Anaytical Method: 48,TO-15
Analytical Date: 08/19/10 02:48
Analyst: RY

Date Collected: 08/18/10 00:00
Date Received: 08/18/10
Field Prep: Not Specified

Parameter	ppbV Results	ppbV RL	ppbV MDL	ug/m3 Results	ug/m3 RL	ug/m3 MDL	Qualifier	Dilution Factor
Volatile Organics in Air (Low Level) - Mansfield Lab								
Propylene	ND	0.200	--	ND	0.344	--		1
Dichlorodifluoromethane	ND	0.200	--	ND	0.988	--		1
Chloromethane	ND	0.200	--	ND	0.413	--		1
Freon-114	ND	0.200	--	ND	1.40	--		1
Vinyl chloride	ND	0.200	--	ND	0.511	--		1
1,3-Butadiene	ND	0.200	--	ND	0.442	--		1
Bromomethane	ND	0.200	--	ND	0.776	--		1
Chloroethane	ND	0.200	--	ND	0.527	--		1
Ethanol	ND	2.50	--	ND	4.71	--		1
Vinyl bromide	ND	0.200	--	ND	0.874	--		1
Acetone	ND	1.00	--	ND	2.37	--		1
Trichlorofluoromethane	ND	0.200	--	ND	1.12	--		1
Isopropanol	ND	0.500	--	ND	1.23	--		1
1,1-Dichloroethene	ND	0.200	--	ND	0.792	--		1
Methylene chloride	ND	1.00	--	ND	3.47	--		1
3-Chloropropene	ND	0.200	--	ND	0.626	--		1
Carbon disulfide	ND	0.200	--	ND	0.622	--		1
Freon-113	ND	0.200	--	ND	1.53	--		1
trans-1,2-Dichloroethene	ND	0.200	--	ND	0.792	--		1
1,1-Dichloroethane	ND	0.200	--	ND	0.809	--		1
Methyl tert butyl ether	ND	0.200	--	ND	0.720	--		1
Vinyl acetate	ND	0.200	--	ND	0.704	--		1
2-Butanone	ND	0.200	--	ND	0.589	--		1
cis-1,2-Dichloroethene	ND	0.200	--	ND	0.792	--		1
Ethyl Acetate	ND	0.500	--	ND	1.80	--		1

Project Name: NBHS
Project Number: Not Specified
Lab Number: L1012729
Report Date: 08/31/10

Air Canister Certification Results

Lab ID: L1012729-03
Client ID: CAN 1648
Sample Location:
Date Collected: 08/18/10 00:00
Date Received: 08/18/10
Field Prep: Not Specified

Parameter	ppbV Results	ppbV RL	ppbV MDL	ug/m3 Results	ug/m3 RL	ug/m3 MDL	Qualifier	Dilution Factor
Volatile Organics in Air (Low Level) - Mansfield Lab								
Chloroform	ND	0.200	--	ND	0.976	--		1
Tetrahydrofuran	ND	0.200	--	ND	0.589	--		1
1,2-Dichloroethane	ND	0.200	--	ND	0.809	--		1
n-Hexane	ND	0.200	--	ND	0.704	--		1
1,1,1-Trichloroethane	ND	0.200	--	ND	1.09	--		1
Benzene	ND	0.200	--	ND	0.638	--		1
Carbon tetrachloride	ND	0.200	--	ND	1.26	--		1
Cyclohexane	ND	0.200	--	ND	0.688	--		1
1,2-Dichloropropane	ND	0.200	--	ND	0.924	--		1
Bromodichloromethane	ND	0.200	--	ND	1.34	--		1
1,4-Dioxane	ND	0.200	--	ND	0.720	--		1
Trichloroethene	ND	0.200	--	ND	1.07	--		1
2,2,4-Trimethylpentane	ND	0.200	--	ND	0.934	--		1
Heptane	ND	0.200	--	ND	0.819	--		1
cis-1,3-Dichloropropene	ND	0.200	--	ND	0.907	--		1
4-Methyl-2-pentanone	ND	0.200	--	ND	0.819	--		1
trans-1,3-Dichloropropene	ND	0.200	--	ND	0.907	--		1
1,1,2-Trichloroethane	ND	0.200	--	ND	1.09	--		1
Toluene	ND	0.200	--	ND	0.753	--		1
2-Hexanone	ND	0.200	--	ND	0.819	--		1
Dibromochloromethane	ND	0.200	--	ND	1.70	--		1
1,2-Dibromoethane	ND	0.200	--	ND	1.54	--		1
Tetrachloroethene	ND	0.200	--	ND	1.36	--		1
Chlorobenzene	ND	0.200	--	ND	0.920	--		1
Ethylbenzene	ND	0.200	--	ND	0.868	--		1
p/m-Xylene	ND	0.400	--	ND	1.74	--		1
Bromoform	ND	0.200	--	ND	2.06	--		1
Styrene	ND	0.200	--	ND	0.851	--		1

Project Name: NBHS
Project Number: Not Specified
Lab Number: L1012729
Report Date: 08/31/10

Air Canister Certification Results

Lab ID: L1012729-03
Client ID: CAN 1648
Sample Location:

Date Collected: 08/18/10 00:00
Date Received: 08/18/10
Field Prep: Not Specified

Parameter	ppbV Results	ppbV RL	ppbV MDL	ug/m3 Results	ug/m3 RL	ug/m3 MDL	Qualifier	Dilution Factor
Volatile Organics in Air (Low Level) - Mansfield Lab								
1,1,2,2-Tetrachloroethane	ND	0.200	--	ND	1.37	--		1
o-Xylene	ND	0.200	--	ND	0.868	--		1
4-Ethyltoluene	ND	0.200	--	ND	0.982	--		1
1,3,5-Trimethybenzene	ND	0.200	--	ND	0.982	--		1
1,2,4-Trimethylbenzene	ND	0.200	--	ND	0.982	--		1
Benzyl chloride	ND	0.200	--	ND	1.03	--		1
1,3-Dichlorobenzene	ND	0.200	--	ND	1.20	--		1
1,4-Dichlorobenzene	ND	0.200	--	ND	1.20	--		1
1,2-Dichlorobenzene	ND	0.200	--	ND	1.20	--		1
1,2,4-Trichlorobenzene	ND	0.200	--	ND	1.48	--		1
Hexachlorobutadiene	ND	0.200	--	ND	2.13	--		1

Project Name: NBHS
Project Number: Not Specified
Lab Number: L1012729
Report Date: 08/31/10

Air Canister Certification Results

Lab ID: L1012729-03
Client ID: CAN 1648
Sample Location:
Date Collected: 08/18/10 00:00
Date Received: 08/18/10
Field Prep: Not Specified

Parameter	ppbV Results	ppbV RL	ppbV MDL	ug/m3 Results	ug/m3 RL	ug/m3 MDL	Qualifier	Dilution Factor
Volatile Organics in Air (Low Level) - Mansfield Lab								

Internal Standard	% Recovery	Qualifier	Acceptance Criteria
1,4-Difluorobenzene	87		60-140
Bromochloromethane	89		60-140
chlorobenzene-d5	87		60-140

Project Name: NBHS
Project Number: Not Specified
Lab Number: L1012729
Report Date: 08/31/10

Air Canister Certification Results

Lab ID: L1012729-03
Client ID: CAN 1648
Sample Location:
Matrix: Air
Anaytical Method: 48,TO-15-SIM
Analytical Date: 08/19/10 02:48
Analyst: RY

Date Collected: 08/18/10 00:00
Date Received: 08/18/10
Field Prep: Not Specified

Parameter	ppbV Results	ppbV RL	ppbV MDL	ug/m3 Results	ug/m3 RL	ug/m3 MDL	Qualifier	Dilution Factor
Volatile Organics in Air by SIM - Mansfield Lab								
Vinyl chloride	ND	0.020	--	ND	0.051	--		1
1,1-Dichloroethene	ND	0.020	--	ND	0.079	--		1
trans-1,2-Dichloroethene	ND	0.020	--	ND	0.079	--		1
cis-1,2-Dichloroethene	ND	0.020	--	ND	0.079	--		1
Trichloroethene	ND	0.020	--	ND	0.107	--		1
Tetrachloroethene	ND	0.020	--	ND	0.136	--		1

Project Name: NBHS
Project Number: Not Specified
Lab Number: L1012729
Report Date: 08/31/10

Air Canister Certification Results

Lab ID: L1012729-03
Client ID: CAN 1648
Sample Location:
Date Collected: 08/18/10 00:00
Date Received: 08/18/10
Field Prep: Not Specified

Parameter	ppbV Results	ppbV RL	ppbV MDL	ug/m3 Results	ug/m3 RL	ug/m3 MDL	Qualifier	Dilution Factor
Volatile Organics in Air by SIM - Mansfield Lab								

Internal Standard	% Recovery	Qualifier	Acceptance Criteria
1,4-difluorobenzene	84		60-140
bromochloromethane	88		60-140
chlorobenzene-d5	88		60-140

Project Name: NBHS
Project Number: Not Specified
Lab Number: L1012729
Report Date: 08/31/10

Air Canister Certification Results

Lab ID: L1012729-04
Client ID: CAN 1603
Sample Location:
Matrix: Air
Anaytical Method: 48,TO-15
Analytical Date: 08/19/10 03:25
Analyst: RY

Date Collected: 08/18/10 00:00
Date Received: 08/18/10
Field Prep: Not Specified

Parameter	ppbV Results	ppbV RL	ppbV MDL	ug/m3 Results	ug/m3 RL	ug/m3 MDL	Qualifier	Dilution Factor
Volatile Organics in Air (Low Level) - Mansfield Lab								
Propylene	ND	0.200	--	ND	0.344	--		1
Dichlorodifluoromethane	ND	0.200	--	ND	0.988	--		1
Chloromethane	ND	0.200	--	ND	0.413	--		1
Freon-114	ND	0.200	--	ND	1.40	--		1
Vinyl chloride	ND	0.200	--	ND	0.511	--		1
1,3-Butadiene	ND	0.200	--	ND	0.442	--		1
Bromomethane	ND	0.200	--	ND	0.776	--		1
Chloroethane	ND	0.200	--	ND	0.527	--		1
Ethanol	ND	2.50	--	ND	4.71	--		1
Vinyl bromide	ND	0.200	--	ND	0.874	--		1
Acetone	ND	1.00	--	ND	2.37	--		1
Trichlorofluoromethane	ND	0.200	--	ND	1.12	--		1
Isopropanol	ND	0.500	--	ND	1.23	--		1
1,1-Dichloroethene	ND	0.200	--	ND	0.792	--		1
Methylene chloride	ND	1.00	--	ND	3.47	--		1
3-Chloropropene	ND	0.200	--	ND	0.626	--		1
Carbon disulfide	ND	0.200	--	ND	0.622	--		1
Freon-113	ND	0.200	--	ND	1.53	--		1
trans-1,2-Dichloroethene	ND	0.200	--	ND	0.792	--		1
1,1-Dichloroethane	ND	0.200	--	ND	0.809	--		1
Methyl tert butyl ether	ND	0.200	--	ND	0.720	--		1
Vinyl acetate	ND	0.200	--	ND	0.704	--		1
2-Butanone	ND	0.200	--	ND	0.589	--		1
cis-1,2-Dichloroethene	ND	0.200	--	ND	0.792	--		1
Ethyl Acetate	ND	0.500	--	ND	1.80	--		1

Project Name: NBHS
Project Number: Not Specified
Lab Number: L1012729
Report Date: 08/31/10

Air Canister Certification Results

Lab ID: L1012729-04
Client ID: CAN 1603
Sample Location:
Date Collected: 08/18/10 00:00
Date Received: 08/18/10
Field Prep: Not Specified

Parameter	ppbV Results	ppbV RL	ppbV MDL	ug/m3 Results	ug/m3 RL	ug/m3 MDL	Qualifier	Dilution Factor
Volatile Organics in Air (Low Level) - Mansfield Lab								
Chloroform	ND	0.200	--	ND	0.976	--		1
Tetrahydrofuran	ND	0.200	--	ND	0.589	--		1
1,2-Dichloroethane	ND	0.200	--	ND	0.809	--		1
n-Hexane	ND	0.200	--	ND	0.704	--		1
1,1,1-Trichloroethane	ND	0.200	--	ND	1.09	--		1
Benzene	ND	0.200	--	ND	0.638	--		1
Carbon tetrachloride	ND	0.200	--	ND	1.26	--		1
Cyclohexane	ND	0.200	--	ND	0.688	--		1
1,2-Dichloropropane	ND	0.200	--	ND	0.924	--		1
Bromodichloromethane	ND	0.200	--	ND	1.34	--		1
1,4-Dioxane	ND	0.200	--	ND	0.720	--		1
Trichloroethene	ND	0.200	--	ND	1.07	--		1
2,2,4-Trimethylpentane	ND	0.200	--	ND	0.934	--		1
Heptane	ND	0.200	--	ND	0.819	--		1
cis-1,3-Dichloropropene	ND	0.200	--	ND	0.907	--		1
4-Methyl-2-pentanone	ND	0.200	--	ND	0.819	--		1
trans-1,3-Dichloropropene	ND	0.200	--	ND	0.907	--		1
1,1,2-Trichloroethane	ND	0.200	--	ND	1.09	--		1
Toluene	ND	0.200	--	ND	0.753	--		1
2-Hexanone	ND	0.200	--	ND	0.819	--		1
Dibromochloromethane	ND	0.200	--	ND	1.70	--		1
1,2-Dibromoethane	ND	0.200	--	ND	1.54	--		1
Tetrachloroethene	ND	0.200	--	ND	1.36	--		1
Chlorobenzene	ND	0.200	--	ND	0.920	--		1
Ethylbenzene	ND	0.200	--	ND	0.868	--		1
p/m-Xylene	ND	0.400	--	ND	1.74	--		1
Bromoform	ND	0.200	--	ND	2.06	--		1
Styrene	ND	0.200	--	ND	0.851	--		1

Project Name: NBHS
Project Number: Not Specified
Lab Number: L1012729
Report Date: 08/31/10

Air Canister Certification Results

Lab ID: L1012729-04
Client ID: CAN 1603
Sample Location:
Date Collected: 08/18/10 00:00
Date Received: 08/18/10
Field Prep: Not Specified

Parameter	ppbV Results	ppbV RL	ppbV MDL	ug/m3 Results	ug/m3 RL	ug/m3 MDL	Qualifier	Dilution Factor
Volatile Organics in Air (Low Level) - Mansfield Lab								
1,1,2,2-Tetrachloroethane	ND	0.200	--	ND	1.37	--		1
o-Xylene	ND	0.200	--	ND	0.868	--		1
4-Ethyltoluene	ND	0.200	--	ND	0.982	--		1
1,3,5-Trimethybenzene	ND	0.200	--	ND	0.982	--		1
1,2,4-Trimethylbenzene	ND	0.200	--	ND	0.982	--		1
Benzyl chloride	ND	0.200	--	ND	1.03	--		1
1,3-Dichlorobenzene	ND	0.200	--	ND	1.20	--		1
1,4-Dichlorobenzene	ND	0.200	--	ND	1.20	--		1
1,2-Dichlorobenzene	ND	0.200	--	ND	1.20	--		1
1,2,4-Trichlorobenzene	ND	0.200	--	ND	1.48	--		1
Hexachlorobutadiene	ND	0.200	--	ND	2.13	--		1

Project Name: NBHS
Project Number: Not Specified
Lab Number: L1012729
Report Date: 08/31/10

Air Canister Certification Results

Lab ID: L1012729-04
Client ID: CAN 1603
Sample Location:
Date Collected: 08/18/10 00:00
Date Received: 08/18/10
Field Prep: Not Specified

Parameter	ppbV Results	ppbV RL	ppbV MDL	ug/m3 Results	ug/m3 RL	ug/m3 MDL	Qualifier	Dilution Factor
Volatile Organics in Air (Low Level) - Mansfield Lab								

Internal Standard	% Recovery	Qualifier	Acceptance Criteria
1,4-Difluorobenzene	78		60-140
Bromochloromethane	82		60-140
chlorobenzene-d5	81		60-140

Project Name: NBHS
Project Number: Not Specified
Lab Number: L1012729
Report Date: 08/31/10

Air Canister Certification Results

Lab ID:	L1012729-04	Date Collected:	08/18/10 00:00
Client ID:	CAN 1603	Date Received:	08/18/10
Sample Location:		Field Prep:	Not Specified
Matrix:	Air		
Anaytical Method:	48,TO-15-SIM		
Analytical Date:	08/19/10 03:25		
Analyst:	RY		

	ppbV			ug/m3				
Parameter	**Results**	**RL**	**MDL**	**Results**	**RL**	**MDL**	**Qualifier**	**Dilution Factor**
Volatile Organics in Air by SIM - Mansfield Lab								
Vinyl chloride	ND	0.020	--	ND	0.051	--		1
1,1-Dichloroethene	ND	0.020	--	ND	0.079	--		1
trans-1,2-Dichloroethene	ND	0.020	--	ND	0.079	--		1
cis-1,2-Dichloroethene	ND	0.020	--	ND	0.079	--		1
Trichloroethene	ND	0.020	--	ND	0.107	--		1
Tetrachloroethene	ND	0.020	--	ND	0.136	--		1

Project Name: NBHS
Project Number: Not Specified
Lab Number: L1012729
Report Date: 08/31/10

Air Canister Certification Results

Lab ID: L1012729-04
Client ID: CAN 1603
Sample Location:
Date Collected: 08/18/10 00:00
Date Received: 08/18/10
Field Prep: Not Specified

Parameter	ppbV Results	ppbV RL	ppbV MDL	ug/m3 Results	ug/m3 RL	ug/m3 MDL	Qualifier	Dilution Factor
Volatile Organics in Air by SIM - Mansfield Lab								

Internal Standard	% Recovery	Qualifier	Acceptance Criteria
1,4-difluorobenzene	75		60-140
bromochloromethane	81		60-140
chlorobenzene-d5	81		60-140

Project Name: NBHS
Project Number: Not Specified
Lab Number: L1012729
Report Date: 08/31/10

Air Canister Certification Results

Lab ID: L1012729-06
Client ID: CAN 1628
Sample Location:
Matrix: Air
Anaytical Method: 48,TO-15
Analytical Date: 08/19/10 04:40
Analyst: RY

Date Collected: 08/18/10 00:00
Date Received: 08/18/10
Field Prep: Not Specified

Parameter	ppbV Results	ppbV RL	ppbV MDL	ug/m3 Results	ug/m3 RL	ug/m3 MDL	Qualifier	Dilution Factor
Volatile Organics in Air (Low Level) - Mansfield Lab								
Propylene	ND	0.200	--	ND	0.344	--		1
Dichlorodifluoromethane	ND	0.200	--	ND	0.988	--		1
Chloromethane	ND	0.200	--	ND	0.413	--		1
Freon-114	ND	0.200	--	ND	1.40	--		1
Vinyl chloride	ND	0.200	--	ND	0.511	--		1
1,3-Butadiene	ND	0.200	--	ND	0.442	--		1
Bromomethane	ND	0.200	--	ND	0.776	--		1
Chloroethane	ND	0.200	--	ND	0.527	--		1
Ethanol	ND	2.50	--	ND	4.71	--		1
Vinyl bromide	ND	0.200	--	ND	0.874	--		1
Acetone	ND	1.00	--	ND	2.37	--		1
Trichlorofluoromethane	ND	0.200	--	ND	1.12	--		1
Isopropanol	ND	0.500	--	ND	1.23	--		1
1,1-Dichloroethene	ND	0.200	--	ND	0.792	--		1
Methylene chloride	ND	1.00	--	ND	3.47	--		1
3-Chloropropene	ND	0.200	--	ND	0.626	--		1
Carbon disulfide	ND	0.200	--	ND	0.622	--		1
Freon-113	ND	0.200	--	ND	1.53	--		1
trans-1,2-Dichloroethene	ND	0.200	--	ND	0.792	--		1
1,1-Dichloroethane	ND	0.200	--	ND	0.809	--		1
Methyl tert butyl ether	ND	0.200	--	ND	0.720	--		1
Vinyl acetate	ND	0.200	--	ND	0.704	--		1
2-Butanone	ND	0.200	--	ND	0.589	--		1
cis-1,2-Dichloroethene	ND	0.200	--	ND	0.792	--		1
Ethyl Acetate	ND	0.500	--	ND	1.80	--		1

Project Name: NBHS
Project Number: Not Specified
Lab Number: L1012729
Report Date: 08/31/10

Air Canister Certification Results

Lab ID: L1012729-06
Client ID: CAN 1628
Sample Location:
Date Collected: 08/18/10 00:00
Date Received: 08/18/10
Field Prep: Not Specified

Parameter	ppbV Results	ppbV RL	ppbV MDL	ug/m3 Results	ug/m3 RL	ug/m3 MDL	Qualifier	Dilution Factor
Volatile Organics in Air (Low Level) - Mansfield Lab								
Chloroform	ND	0.200	--	ND	0.976	--		1
Tetrahydrofuran	ND	0.200	--	ND	0.589	--		1
1,2-Dichloroethane	ND	0.200	--	ND	0.809	--		1
n-Hexane	ND	0.200	--	ND	0.704	--		1
1,1,1-Trichloroethane	ND	0.200	--	ND	1.09	--		1
Benzene	ND	0.200	--	ND	0.638	--		1
Carbon tetrachloride	ND	0.200	--	ND	1.26	--		1
Cyclohexane	ND	0.200	--	ND	0.688	--		1
1,2-Dichloropropane	ND	0.200	--	ND	0.924	--		1
Bromodichloromethane	ND	0.200	--	ND	1.34	--		1
1,4-Dioxane	ND	0.200	--	ND	0.720	--		1
Trichloroethene	ND	0.200	--	ND	1.07	--		1
2,2,4-Trimethylpentane	ND	0.200	--	ND	0.934	--		1
Heptane	ND	0.200	--	ND	0.819	--		1
cis-1,3-Dichloropropene	ND	0.200	--	ND	0.907	--		1
4-Methyl-2-pentanone	ND	0.200	--	ND	0.819	--		1
trans-1,3-Dichloropropene	ND	0.200	--	ND	0.907	--		1
1,1,2-Trichloroethane	ND	0.200	--	ND	1.09	--		1
Toluene	ND	0.200	--	ND	0.753	--		1
2-Hexanone	ND	0.200	--	ND	0.819	--		1
Dibromochloromethane	ND	0.200	--	ND	1.70	--		1
1,2-Dibromoethane	ND	0.200	--	ND	1.54	--		1
Tetrachloroethene	ND	0.200	--	ND	1.36	--		1
Chlorobenzene	ND	0.200	--	ND	0.920	--		1
Ethylbenzene	ND	0.200	--	ND	0.868	--		1
p/m-Xylene	ND	0.400	--	ND	1.74	--		1
Bromoform	ND	0.200	--	ND	2.06	--		1
Styrene	ND	0.200	--	ND	0.851	--		1

Project Name: NBHS
Project Number: Not Specified
Lab Number: L1012729
Report Date: 08/31/10

Air Canister Certification Results

Lab ID: L1012729-06
Client ID: CAN 1628
Sample Location:

Date Collected: 08/18/10 00:00
Date Received: 08/18/10
Field Prep: Not Specified

Parameter	ppbV Results	ppbV RL	ppbV MDL	ug/m3 Results	ug/m3 RL	ug/m3 MDL	Qualifier	Dilution Factor
Volatile Organics in Air (Low Level) - Mansfield Lab								
1,1,2,2-Tetrachloroethane	ND	0.200	--	ND	1.37	--		1
o-Xylene	ND	0.200	--	ND	0.868	--		1
4-Ethyltoluene	ND	0.200	--	ND	0.982	--		1
1,3,5-Trimethybenzene	ND	0.200	--	ND	0.982	--		1
1,2,4-Trimethylbenzene	ND	0.200	--	ND	0.982	--		1
Benzyl chloride	ND	0.200	--	ND	1.03	--		1
1,3-Dichlorobenzene	ND	0.200	--	ND	1.20	--		1
1,4-Dichlorobenzene	ND	0.200	--	ND	1.20	--		1
1,2-Dichlorobenzene	ND	0.200	--	ND	1.20	--		1
1,2,4-Trichlorobenzene	ND	0.200	--	ND	1.48	--		1
Hexachlorobutadiene	ND	0.200	--	ND	2.13	--		1

Project Name: NBHS
Project Number: Not Specified
Lab Number: L1012729
Report Date: 08/31/10

Air Canister Certification Results

Lab ID: L1012729-06
Client ID: CAN 1628
Sample Location:
Date Collected: 08/18/10 00:00
Date Received: 08/18/10
Field Prep: Not Specified

Parameter	ppbV Results	ppbV RL	ppbV MDL	ug/m3 Results	ug/m3 RL	ug/m3 MDL	Qualifier	Dilution Factor
Volatile Organics in Air (Low Level) - Mansfield Lab								

Internal Standard	% Recovery	Qualifier	Acceptance Criteria
1,4-Difluorobenzene	86		60-140
Bromochloromethane	93		60-140
chlorobenzene-d5	94		60-140

Project Name: NBHS
Project Number: Not Specified
Lab Number: L1012729
Report Date: 08/31/10

Air Canister Certification Results

Lab ID: L1012729-06
Client ID: CAN 1628
Sample Location:
Matrix: Air
Anaytical Method: 48,TO-15-SIM
Analytical Date: 08/19/10 04:40
Analyst: RY

Date Collected: 08/18/10 00:00
Date Received: 08/18/10
Field Prep: Not Specified

Parameter	ppbV Results	ppbV RL	ppbV MDL	ug/m3 Results	ug/m3 RL	ug/m3 MDL	Qualifier	Dilution Factor
Volatile Organics in Air by SIM - Mansfield Lab								
Vinyl chloride	ND	0.020	--	ND	0.051	--		1
1,1-Dichloroethene	ND	0.020	--	ND	0.079	--		1
trans-1,2-Dichloroethene	ND	0.020	--	ND	0.079	--		1
cis-1,2-Dichloroethene	ND	0.020	--	ND	0.079	--		1
Trichloroethene	ND	0.020	--	ND	0.107	--		1
Tetrachloroethene	ND	0.020	--	ND	0.136	--		1

Project Name: NBHS
Project Number: Not Specified
Lab Number: L1012729
Report Date: 08/31/10

Air Canister Certification Results

Lab ID: L1012729-06
Client ID: CAN 1628
Sample Location:
Date Collected: 08/18/10 00:00
Date Received: 08/18/10
Field Prep: Not Specified

Parameter	ppbV Results	ppbV RL	ppbV MDL	ug/m3 Results	ug/m3 RL	ug/m3 MDL	Qualifier	Dilution Factor
Volatile Organics in Air by SIM - Mansfield Lab								

Internal Standard	% Recovery	Qualifier	Acceptance Criteria
1,4-difluorobenzene	84		60-140
bromochloromethane	90		60-140
chlorobenzene-d5	95		60-140

Project Name: NEW BEDFORD
Project Number: 115058

Lab Number: L1013128
Report Date: 08/31/10

Sample Receipt and Container Information

Were project specific reporting limits specified? YES

Reagent H2O Preserved Vials Frozen on: NA

Cooler Information **Custody Seal**

Cooler	
N/A	Present/Intact

Container Information

Container ID	Container Type	Cooler	pH	Temp deg C	Pres	Seal	Analysis(*)
L1013128-01A	Canister - 6 Liter	N/A	NA		NA	Present/Intact	MCP-TO15-SIM(30),MCP-TO15(30)
L1013128-02A	Canister - 6 Liter	N/A	NA		NA	Present/Intact	MCP-TO15-SIM(30),MCP-TO15(30)
L1013128-03A	Canister - 6 Liter	N/A	NA		NA	Present/Intact	MCP-TO15-SIM(30),MCP-TO15(30)
L1013128-04A	Canister - 6 Liter	N/A	NA		NA	Present/Intact	MCP-TO15-SIM(30),MCP-TO15(30)
L1013128-05A	Canister - 6 Liter	N/A	NA		NA	Present/Intact	CLEAN-FEE()

*Values in parentheses indicate holding time in days

Project Name:	NEW BEDFORD	**Lab Number:**	L1013128
Project Number:	115058	**Report Date:**	08/31/10

GLOSSARY

Acronyms

EPA	· Environmental Protection Agency.
LCS	· Laboratory Control Sample: A sample matrix, free from the analytes of interest, spiked with verified known amounts of analytes or a material containing known and verified amounts of analytes.
LCSD	· Laboratory Control Sample Duplicate: Refer to LCS.
MDL	· Method Detection Limit: This value represents the level to which target analyte concentrations are reported as estimated values, when those target analyte concentrations are quantified below the reporting limit (RL). The MDL includes any adjustments from dilutions, concentrations or moisture content, where applicable.
MS	· Matrix Spike Sample: A sample prepared by adding a known mass of target analyte to a specified amount of matrix sample for which an independent estimate of target analyte concentration is available.
MSD	· Matrix Spike Sample Duplicate: Refer to MS.
NA	· Not Applicable.
NC	· Not Calculated: Term is utilized when one or more of the results utilized in the calculation are non-detect at the parameter's reporting unit.
NI	· Not Ignitable.
RL	· Reporting Limit: The value at which an instrument can accurately measure an analyte at a specific concentration. The RL includes any adjustments from dilutions, concentrations or moisture content, where applicable.
RPD	· Relative Percent Difference: The results from matrix and/or matrix spike duplicates are primarily designed to assess the precision of analytical results in a given matrix and are expressed as relative percent difference (RPD). Values which are less than five times the reporting limit for any individual parameter are evaluated by utilizing the absolute difference between the values; although the RPD value will be provided in the report.

Terms

Analytical Method: Both the document from which the method originates and the analytical reference method. (Example: EPA 8260B is shown as 1,8260B.) The codes for the reference method documents are provided in the References section of the Addendum.

Data Qualifiers

A	- Spectra identified as "Aldol Condensation Product".
B	- The analyte was detected above the reporting limit in the associated method blank. Flag only applies to associated field samples that have detectable concentrations of the analyte at less than five times (5x) the concentration found in the blank. For MCP-related projects, flag only applies to associated field samples that have detectable concentrations of the analyte at less than ten times (10x) the concentration found in the blank. For DOD-related projects, flag only applies to associated field samples that have detectable concentrations of the analyte at less than ten times (10x) the concentration found in the blank AND the analyte was detected above one-half the reporting limit (or above the reporting limit for common lab contaminants) in the associated method blank.
D	- Concentration of analyte was quantified from diluted analysis. Flag only applies to field samples that have detectable concentrations of the analyte.
E	- Concentration of analyte exceeds the range of the calibration curve and/or linear range of the instrument.
H	- The analysis of pH was performed beyond the regulatory-required holding time of 15 minutes from the time of sample collection.
I	- The RPD between the results for the two columns exceeds the method-specified criteria; however, the lower value has been reported due to obvious interference.
P	- The RPD between the results for the two columns exceeds the method-specified criteria.
Q	- The quality control sample exceeds the associated acceptance criteria. Note: This flag is not applicable for matrix spike recoveries when the sample concentration is greater than 4x the spike added or for batch duplicate RPD when the sample concentrations are less than 5x the RL. (Metals only.)
R	- Analytical results are from sample re-analysis.

Report Format: Data Usability Report

Project Name:	NEW BEDFORD	**Lab Number:**	L1013128
Project Number:	115058	**Report Date:**	08/31/10

Data Qualifiers

RE - Analytical results are from sample re-extraction.

J - Estimated value. This represents an estimated concentration for Tentatively Identified Compounds (TICs).

ND - Not detected at the reporting limit (RL) for the sample.

Report Format: Data Usability Report

Project Name: NEW BEDFORD
Project Number: 115058
Lab Number: L1013128
Report Date: 08/31/10

REFERENCES

101 Compendium of Methods for the Determination of Toxic Organic Compounds in Ambient Air (EPA/625/R-96/010b:January 1999) with QC Requirements & Performance Standards for the Analysis of TO-15 under the Massachusetts Contingency Plan, WSC-CAM-IXB, July 2010.

LIMITATION OF LIABILITIES

Alpha Analytical performs services with reasonable care and diligence normal to the analytical testing laboratory industry. In the event of an error, the sole and exclusive responsibility of Alpha Analytical shall be to re-perform the work at it's own expense. In no event shall Alpha Analytical be held liable for any incidental, consequential or special damages, including but not limited to, damages in any way connected with the use of, interpretation of, information or analysis provided by Alpha Analytical.

We strongly urge our clients to comply with EPA protocol regarding sample volume, preservation, cooling, containers, sampling procedures, holding time and splitting of samples in the field.

Certificate/Approval Program Summary

Last revised July 19, 2010 – Mansfield Facility

The following list includes only those analytes/methods for which certification/approval is currently held.
For a complete listing of analytes for the referenced methods, please contact your Alpha Customer Service Representative.

Connecticut Department of Public Health Certificate/Lab ID: PH-0141.

Wastewater/Non-Potable Water (Inorganic Parameters: pH, Turbidity, Conductivity, Alkalinity, Aluminum, Antimony, Arsenic, Barium, Beryllium, Boron, Cadmium, Calcium, Chromium, Cobalt, Copper, Iron, Lead, Magnesium, Manganese, Mercury, Molybdenum, Nickel, Potassium, Selenium, Silver, Sodium, Strontium, Thallium, Tin, Vanadium, Zinc, Total Residue (Solids), Total Suspended Solids (non-filterable), Total Cyanide. Organic Parameters: PCBs, Organochlorine Pesticides, Technical Chlordane, Toxaphene, Acid Extractables, Benzidines, Phthalate Esters, Nitrosamines, Nitroaromatics & Isophorone, PAHs, Haloethers, Chlorinated Hydrocarbons, Volatile Organics.)

Solid Waste/Soil (Inorganic Parameters: pH, Aluminum, Antimony, Arsenic, Barium, Beryllium, Cadmium, Calcium, Chromium, Hexavalent Chromium, Cobalt, Copper, Iron, Lead, Magnesium, Manganese, Mercury, Molybdenum, Nickel, Potassium, Selenium, Silver, Sodium, Thallium, Vanadium, Zinc, Total Organic Carbon, Total Cyanide, Corrosivity, TCLP 1311. Organic Parameters: PCBs, Organochlorine Pesticides, Technical Chlordane, Toxaphene, Volatile Organics, Acid Extractables, Benzidines, Phthalates, Nitrosamines, Nitroaromatics & Cyclic Ketones, PAHs, Haloethers, Chlorinated Hydrocarbons.)

Florida Department of Health Certificate/Lab ID: E87814. ***NELAP Accredited.***

Non-Potable Water (Inorganic Parameters: SM2320B, EPA 120.1, SM2510B, EPA 245.1, EPA 150.1, EPA 160.2, SM2540D, EPA 335.2, SM2540G, EPA 180.1. Organic Parameters: EPA 625, 608.)

Solid & Chemical Materials (Inorganic Parameters: 6020, 7470, 7471, 9045, 9014. Organic Parameters: EPA 8260, 8270, 8082, 8081.)

Air & Emissions (EPA TO-15.)

Louisiana Department of Environmental Quality Certificate/Lab ID: 03090. ***NELAP Accredited.***

Non-Potable Water (Inorganic Parameters: EPA 120.1, 150.1, 160.2, 180.1, 200.8, 245.1, 310.1, 335.2, 608, 625, 1631, 3010, 3015, 3020, 6020, 9010, 9014, 9040, SM2320B, 2510B, 2540D, 2540G, 4500CN-E, 4500H-B, Organic Parameters: EPA 3510, 3580, 3630, 3640, 3660, 3665, 5030, 8015 (mod), 3570, 8081, 8082, 8260, 8270,)

Solid & Chemical Materials (Inorganic Parameters: 6020, 7196, 7470, 7471, 7474, 9010, 9014, 9040, 9045, 9060. Organic Parameters: EPA 8015 (mod), EPA 3570, 1311, 3050, 3051, 3060, 3580, 3630, 3640, 3660, 3665, 5035, 8081, 8082, 8260, 8270.)

Biological Tissue (Inorganic Parameters: EPA 6020. Organic Parameters: EPA 3570, 3510, 3610, 3630, 3640, 8270.)

Massachusetts Department of Environmental Protection Certificate/Lab ID: M-MA030.

Non-Potable Water (Inorganic Parameters: SM4500H+B. Organic Parameters: EPA 624.)

New Hampshire Department of Environmental Services Certificate/Lab ID: 2206. ***NELAP Accredited.***

Non-Potable Water (Inorganic Parameters: EPA 200.8, 245.1, 1631E, 120.1, 150.1, 180.1, 310.1, 335.2, 160.2, SM2540D, 2540G, 4500CN-E, 4500H+B, 2320B, 2510B. Organic Parameters: EPA 625, 608.)

New Jersey Department of Environmental Protection Certificate/Lab ID: MA015. ***NELAP Accredited.***

Non-Potable Water (Inorganic Parameters: SW-846 1312, 3010, 3020A, 3015, 6020, SM2320B, EPA 200.8, SM2540C, 2540D, 2540G, EPA 120.1, SM2510B, EPA 180.1, 245.1, 1631E, SW-846 9040B, 6020, 9010B, 9014 Organic Parameters: EPA 608, 625, SW-846 3510C, 3580A, 5030B, 3035L, 5035H, 3630C, 3640A, 3660B, 3665A, 8081A, 8082 8260B, 8270C)

Solid & Chemical Materials (Inorganic Parameters: SW-846 6020, 9010B, 9014, 1311, 1312, 3050B, 3051, 3060A, 7196A, 7470A, 7471A, 9045C, 9060. Organic Parameters: SW-846 3580A, 5030B, 3035L, 5035H, 3630C, 3640A, 3660B, 3665A, 8081A, 8082, 8260B, 8270C, 3570, 8015B.)

Atmospheric Organic Parameters (EPA TO-15)

Biological Tissue (Inorganic Parameters: SW-846 6020 Organic Parameters: SW-846 8270C, 3510C, 3570, 3610B, 3630C, 3640A)

New York Department of Health Certificate/Lab ID: 11627. ***NELAP Accredited.***

Non-Potable Water (Inorganic Parameters: EPA 310.1, SM2320B, EPA 365.2, 160.1, EPA 160.2, SM2540D, EPA 200.8, 6020, 1631E, 245.1, 335.2, 9014, 150.1, 9040B, 120.1, SM2510B, EPA 376.2, 180.1, 9010B. Organic Parameters: EPA 624, 8260B, 8270C, 608, 8081A, 625, 8082, 3510C, 3511, 5030B.)

Solid & Hazardous Waste (Inorganic Parameters: EPA 9040B, 9045C, SW-846 Ch7 Sec 7.3, EPA 6020, 7196A, 7471A, 7474, 9014, 9040B, 9045C, 9010B. Organic Parameters: EPA 8260B, 8270C, 8081A, DRO 8015B, 8082, 1311, 3050B, 3580, 3050B, 3035, 3570, 3051, 5035, 5030B.)

Air & Emissions (EPA TO-15.)

Rhode Island Department of Health Certificate/Lab ID: LAO00299. ***NELAP Accredited via LA-DEQ.***

Refer to MA-DEP Certificate for Non-Potable Water.

Refer to LA-DEQ Certificate for Non-Potable Water.

Texas Commission of Environmental Quality Certificate/Lab ID: T104704419-08-TX. ***NELAP Accredited.***

Solid & Chemical Materials (Inorganic Parameters: EPA 6020, 7470, 7471, 1311, 7196, 9014, 9040, 9045, 9060. Organic Parameters: EPA 8015, 8270, 8260, 8081, 8082.)

Air (Organic Parameters: EPA TO-15)

U.S. Army Corps of Engineers

Department of Defense Certificate/Lab ID: L2217.01.

Solid & Hazardous Waste (Inorganic Parameters: EPA 1311, 1312,3051, 6020, 747A, 7474, 9045C,9060, SM 2540G, ASTM D422-63. Organic Parameters: EPA 3580, 3570, 3540C, 5035, 8260B, 8270C, 8270 Alk-PAH, 8082, 8081A, 8015 (SHC), 8015 (DRO).

Air & Emissions (EPA TO-15.)

Analytes Not Accredited by NELAP
Certification is not available by NELAP for the following analytes: **8270C:** Biphenyl.

AIR ANALYSIS

PAGE 1 OF 1

ALPHA ANALYTICAL

CHAIN OF CUSTODY

320 Forbes Blvd, Mansfield, MA 02048
TEL: 508-822-9300 FAX: 508-822-3288

Date Rec'd in Lab:

ALPHA Job #: L1013128

Client Information

Client: TRC
Address: 650 SUFFOLK ST.
LOWELL MA
Phone: 978 970 5600
Fax:
Email: JFIERO@TRCSOLUTIONS.COM DSULLIVAN@TRCSOLUTIONS.COM

☐ These samples have been previously analyzed by Alpha

Project Information

Project Name: NEW BEDFORD
Project Location: NBHS IAQ
Project #: 115058
Project Manager: DAVID SULLIVAN
ALPHA Quote #:

Turn-Around Time

☑ Standard ☐ RUSH (only confirmed if pre-approved!)

Date Due: Time:

Report Information - Data Deliverables

☐ FAX
☐ ADEx
Criteria Checker: _____
(Default based on Regulatory Criteria Indicated)
Other Formats: _____
☐ EMAIL (standard pdf report)
☐ Additional Deliverables: _____

Report to: (if different than Project Manager)

Billing Information

☐ Same as Client info PO #:

Regulatory Requirements/Report Limits

State/Fed	Program	Criteria

Other Project Specific Requirements/Comments:

All Columns Below Must Be Filled Out

ALPHA Lab ID (Lab Use Only)	Sample ID	Collection Date	Start Time	End Time	Initial Vacuum	Final Vacuum	Sample Matrix*	Sampler's Initials	Can Size	I D Can	I D - Flow Controller	TO-14A by TO-15	TO-15	TO-15 SIM	APH	FIXED GASES	TO-13A	TO-4 / TO-10	Sample Comments (i.e. PID)
13128 1	(IA 1) A-112-3	8/23-8/24	10:50	10:50	>-30	-5	AA	JF	6l	1628	0266			✓					
2	(IA DUP) A-112-3	8/23-8/24	10:50	10:50	>-30	-5	AA	JF	6l	1648	0133			✓					
3	(IA2) B-114	8/23-8/24	11:05	11:05	-28	-5	AA	JF	6l	633	0393			✓					
4	(IA3) D-120	8/23-8/24	11:30	11:30	>-30	-4	AA	JF	6l	756	0346			✓					

*SAMPLE MATRIX CODES
AA = Ambient Air (Indoor/Outdoor)
SV = Soil Vapor/Landfill Gas/SVE
Other = Please Specify

Container Type: C3

Relinquished By:	Date/Time	Received By:	Date/Time:
Jason C. Fiero	8/24/2010	[illegible]	8.24.10 1700

Please print clearly, legibly and completely. Samples can not be logged in and turnaround time clock will not start until any ambiguities are resolved. All samples submitted are subject to Alpha's Terms and Conditions. See reverse side.

Form No: 101-02 (19-Jun-09)

Serial_No:08311016:27

GeoTesting express
a subsidiary of Geocomp Corporation

Client:	TRC Companies Inc.		
Project:	City of New Bedford		
Location:	New Bedford, MA	Project No:	GTX-10171
Boring ID: MW-7D	Sample Type: jar	Tested By:	jbr
Sample ID:---	Test Date: 09/07/10	Checked By:	jdt
Depth : 13-17 ft	Test Id: 189778		
Test Comment:	---		
Sample Description:	Wet, gray silty sand		
Sample Comment:	---		

Particle Size Analysis - ASTM D 422-63 (reapproved 2002)

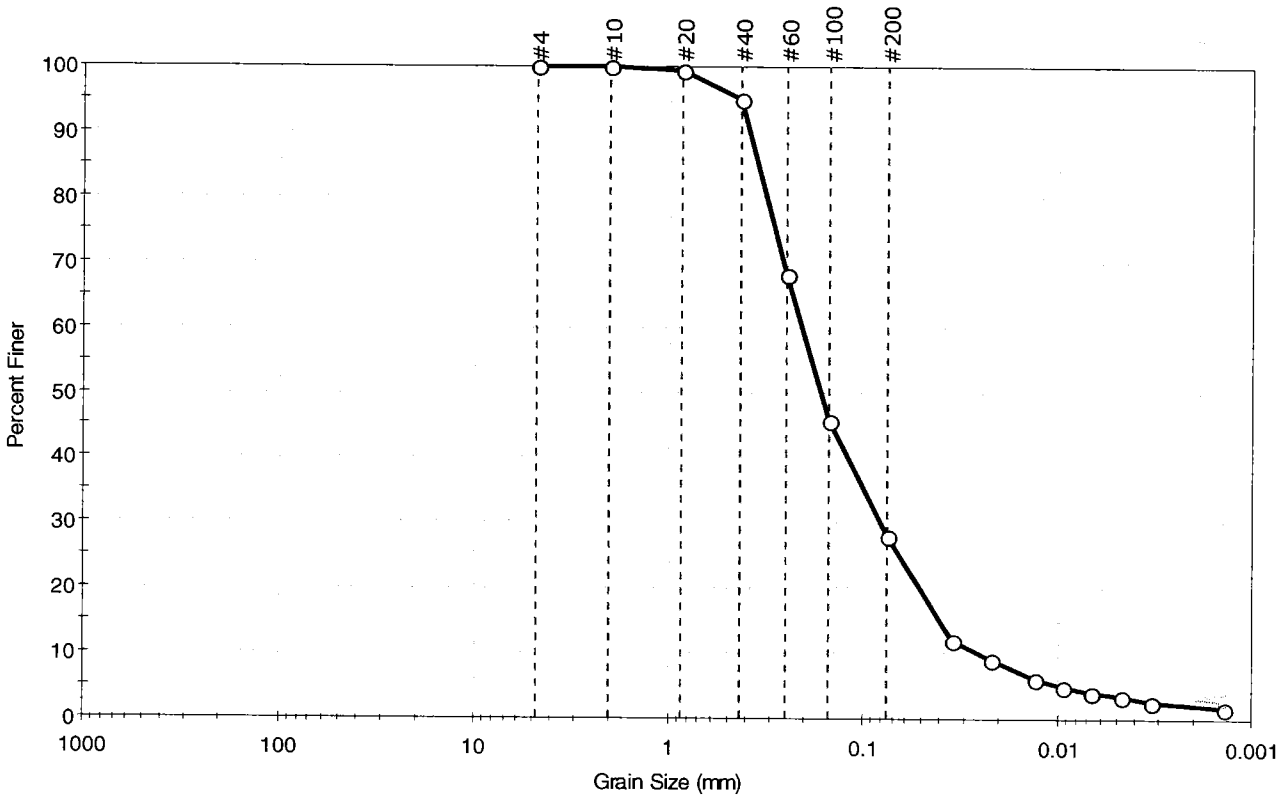

% Cobble	% Gravel	% Sand	% Silt & Clay Size
–	0.0	72.0	28.0

Sieve Name	Sieve Size, mm	Percent Finer	Spec. Percent	Complies
#4	4.75	100		
#10	2.00	100		
#20	0.85	99		
#40	0.42	95		
#60	0.25	68		
#100	0.15	46		
#200	0.075	28		
---	Particle Size (mm)	Percent Finer	Spec. Percent	Complies
---	0.0348	12		
---	0.0222	9		
---	0.0131	6		
---	0.0094	5		
---	0.0067	4		
---	0.0047	4		
---	0.0033	3		
---	0.0014	2		

Coefficients

D_{85} = 0.3486 mm D_{30} = 0.0811 mm
D_{60} = 0.2081 mm D_{15} = 0.0399 mm
D_{50} = 0.1656 mm D_{10} = 0.0253 mm
C_u = N/A C_c = N/A

Classification

ASTM Silty sand (SM)

AASHTO Silty Gravel and Sand (A-2-4 (0))

Sample/Test Description

Sand/Gravel Particle Shape : ---

Sand/Gravel Hardness : ---

printed 9/10/2010 6:49:38 AM

GeoTesting express
a subsidiary of Geocomp Corporation

Client:	TRC Companies Inc.		
Project:	City of New Bedford		
Location:	New Bedford, MA	Project No:	GTX-10171
Boring ID: MW-7D	Sample Type: jar	Tested By:	cam
Sample ID:---	Test Date: 09/08/10	Checked By:	jdt
Depth : 13-17 ft	Test Id: 189776		
Test Comment:	---		
Sample Description:	Wet, gray silty sand		
Sample Comment:	---		

Atterberg Limits - ASTM D 4318-05

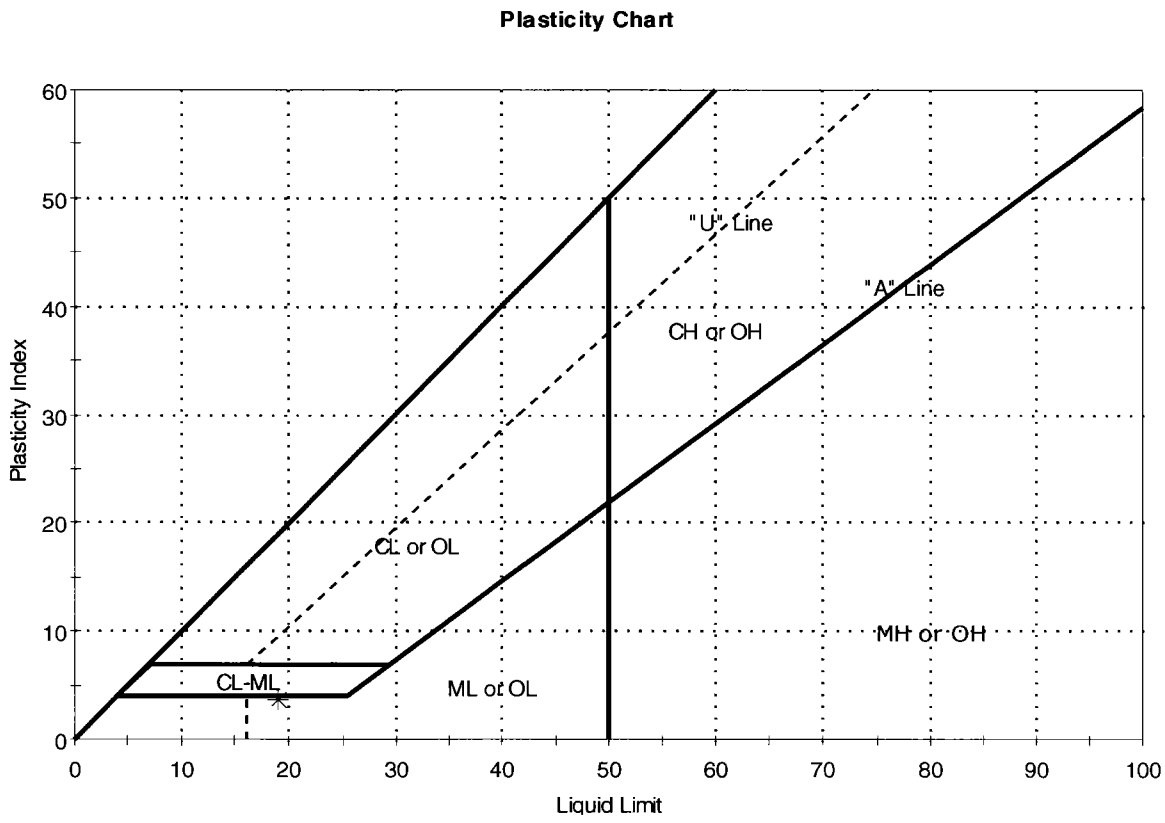

Symbol	Sample ID	Boring	Depth	Natural Moisture Content,%	Liquid Limit	Plastic Limit	Plasticity Index	Liquidity Index	Soil Classification
✳	---	MW-7D	13-17 ft	24	19	15	4	2	Silty sand (SM)

Sample Prepared using the WET method
5% Retained on #40 Sieve
Dry Strength: HIGH
Dilentancy: SLOW
Toughness: LOW

GeoTesting express
a subsidiary of Geocomp Corporation

Client:	TRC Companies Inc.		
Project:	City of New Bedford		
Location:	New Bedford, MA	Project No:	GTX-10171
Boring ID: MW-28	Sample Type: jar	Tested By:	jbr
Sample ID:---	Test Date: 09/08/10	Checked By:	jdt
Depth : 8-10 ft	Test Id: 189779		
Test Comment:	---		
Sample Description:	Moist, light brownish gray silty sand		
Sample Comment:	---		

Particle Size Analysis - ASTM D 422-63 (reapproved 2002)

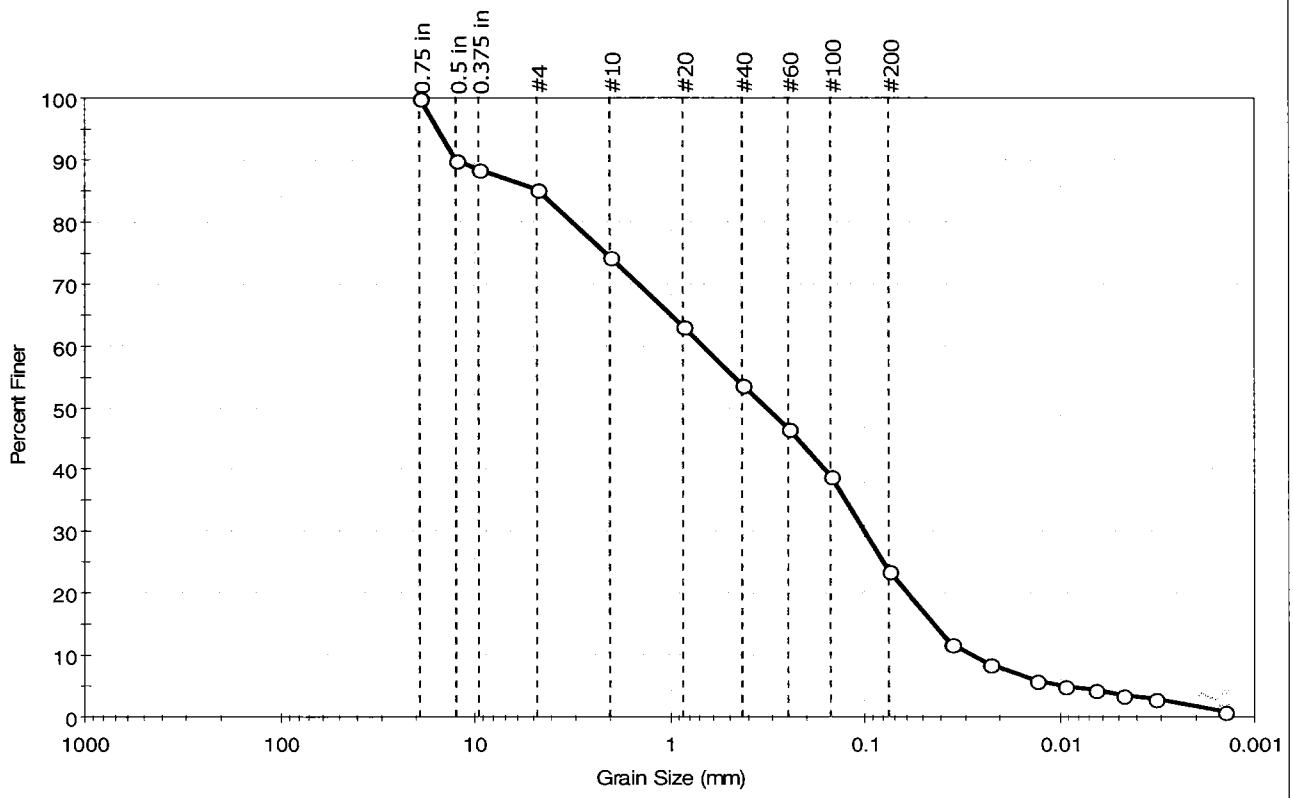

% Cobble	% Gravel	% Sand	% Silt & Clay Size
—	14.9	61.4	23.7

Sieve Name	Sieve Size, mm	Percent Finer	Spec. Percent	Complies
0.75 in	19.00	100		
0.5 in	12.50	90		
0.375 in	9.50	88		
#4	4.75	85		
#10	2.00	74		
#20	0.85	63		
#40	0.42	54		
#60	0.25	47		
#100	0.15	39		
#200	0.075	24		
---	Particle Size (mm)	Percent Finer	Spec. Percent	Complies
---	0.0356	12		
---	0.0227	9		
---	0.0131	6		
---	0.0093	5		
---	0.0066	4		
---	0.0047	3		
---	0.0032	3		
---	0.0014	1		

Coefficients

D_{85} =4.6928 mm D_{30} =0.0997 mm
D_{60} =0.6710 mm D_{15} =0.0433 mm
D_{50} =0.3232 mm D_{10} =0.0276 mm
C_u =N/A C_c =N/A

Classification

ASTM Silty sand (SM)

AASHTO Silty Gravel and Sand (A-2-4 (0))

Sample/Test Description

Sand/Gravel Particle Shape : ROUNDED

Sand/Gravel Hardness : HARD

printed 9/10/2010 6:38:50 AM

GeoTesting express
a subsidiary of Geocomp Corporation

Client:	TRC Companies Inc.		
Project:	City of New Bedford		
Location:	New Bedford, MA	Project No:	GTX-10171
Boring ID: MW-28	Sample Type: jar	Tested By:	cam
Sample ID:---	Test Date: 09/03/10	Checked By:	jdt
Depth : 8-10 ft	Test Id: 189777		
Test Comment:	---		
Sample Description:	Moist, light brownish gray silty sand		
Sample Comment:	---		

Atterberg Limits - ASTM D 4318-05

Sample Determined to be non-plastic

Symbol	Sample ID	Boring	Depth	Natural Moisture Content,%	Liquid Limit	Plastic Limit	Plasticity Index	Liquidity Index	Soil Classification
*	---	MW-28	8-10 ft	9	n/a	n/a	n/a	n/a	Silty sand (SM)

46% Retained on #40 Sieve
Dry Strength: NONE
Dilentancy: RAPID
Toughness: n/a
The sample was determined to be Non-Plastic

con-test® ANALYTICAL LABORATORY
39 Spruce Street * East Longmeadow, MA 01028 * FAX 413/525-6405 * TEL. 413/525-2332

September 17, 2010

David Sullivan
TRC Solutions - Lowell
650 Suffolk Street
Lowell, MA 01852

Project Location: City of New Bedford - NBHS
Client Job Number:
Project Number: 115058
Laboratory Work Order Number: 10H0837

Enclosed are results of analyses for samples received by the laboratory on August 27, 2010. If you have any questions concerning this report, please feel free to contact me.

Sincerely,

Meghan E. Kelley
Project Manager

39 Spruce Street * East Longmeadow, MA 01028 * FAX 413/525-6405 * TEL. 413/525-2332

TRC Solutions - Lowell
650 Suffolk Street
Lowell, MA 01852
ATTN: David Sullivan

REPORT DATE: 9/17/2010

PURCHASE ORDER NUMBER: 26827

PROJECT NUMBER: 115058

ANALYTICAL SUMMARY

WORK ORDER NUMBER: 10H0837

The results of analyses performed on the following samples submitted to the CON-TEST Analytical Laboratory are found in this report.

PROJECT LOCATION: City of New Bedford - NBHS

FIELD SAMPLE #	LAB ID:	MATRIX	SAMPLE DESCRIPTION	TEST	SUB LAB
MW-7D (8-10)	10H0837-02	Soil		SW 846 9060	MA M-MA-086/CT PH-0574/NY11148
MW-7D (10-12)	10H0837-03	Soil		SW 846 9060	MA M-MA-086/CT PH-0574/NY11148
MW-7D (13-15)	10H0837-04	Soil		SW 846 9060	MA M-MA-086/CT PH-0574/NY11148

39 Spruce Street * East Longmeadow, MA 01028 * FAX 413/525-6405 * TEL. 413/525-2332

CASE NARRATIVE SUMMARY

All reported results are within defined laboratory quality control objectives unless listed below or otherwise qualified in this report.

The results of analyses reported only relate to samples submitted to the Con-Test Analytical Laboratory for testing.
I certify that the analyses listed above, unless specifically listed as subcontracted, if any, were performed under my direction according to the approved methodologies listed in this document, and that based upon my inquiry of those individuuals immediately responsible for obtaining the information, the material contained in this report is, to the best of my knowledge and belief, accurate and complete.

Michael A. Erickson
Laboratory Director

39 Spruce Street * East Longmeadow, MA 01028 * FAX 413/525-6405 * TEL. 413/525-2332

Project Location: City of New Bedford - NBHS
Sample Description:
Work Order: 10H0837

Date Received: 8/27/2010

Field Sample #: MW-7D (8-10)
Sampled: 8/24/2010 13:00

Sample ID: 10H0837-02

Sample Matrix: Soil

Conventional Chemistry Parameters by EPA/APHA/SW-8

Analyte	Results	RL	Units	Dilution	Flag	Method	Date Prepared	Date/Time Analyzed	Analyst
Total Organic Carbon	4.4	0.01	%	1		SW 846 9060		9/17/10 6:00	AAL

39 Spruce Street * East Longmeadow, MA 01028 * FAX 413/525-6405 * TEL. 413/525-2332

Project Location: City of New Bedford - NBHS
Sample Description:
Work Order: 10H0837

Date Received: 8/27/2010

Field Sample #: MW-7D (10-12)
Sampled: 8/24/2010 13:20

Sample ID: 10H0837-03

Sample Matrix: Soil

Conventional Chemistry Parameters by EPA/APHA/SW-8

Analyte	Results	RL	Units	Dilution	Flag	Method	Date Prepared	Date/Time Analyzed	Analyst
Total Organic Carbon	23.9	0.01	%	1		SW 846 9060		9/17/10 6:00	AAL

39 Spruce Street * East Longmeadow, MA 01028 * FAX 413/525-6405 * TEL. 413/525-2332

Project Location: City of New Bedford - NBHS
Sample Description:
Work Order: 10H0837

Date Received: 8/27/2010

Field Sample #: MW-7D (13-15)
Sampled: 8/24/2010 13:30

Sample ID: 10H0837-04

Sample Matrix: Soil

Conventional Chemistry Parameters by EPA/APHA/SW-8

Analyte	Results	RL	Units	Dilution	Flag	Method	Date Prepared	Date/Time Analyzed	Analyst
Total Organic Carbon	0.352	0.01	%	1		SW 846 9060		9/17/10 6:00	AAL

39 Spruce Street * East Longmeadow, MA 01028 * FAX 413/525-6405 * TEL. 413/525-2332

FLAG/QUALIFIER SUMMARY

*	QC result is outside of established limits.
†	Wide recovery limits estabished for difficult compound.
‡	Wide RPD limits estabished for difficult compound.
#	Data exceeded client recommended or regulatory level

Percent recoveries and relative percent differences (RPDs) are determined by the software using values in the calculation which have not been rounded.

39 Spruce Street * East Longmeadow, MA 01028 * FAX 413/525-6405 * TEL. 413/525-2332

CERTIFICATIONS

Certified Analyses included in this Report

Analyte	Certifications

No certified Analyses included in this Report

The CON-TEST Environmental Laboratory operates under the following certifications and accreditations:

Code	Description	Number	Expires
AIHA	American Industrial Hygiene Association	100033	01/1/2012
MA	Massachusetts DEP	M-MA100	06/30/2011
CT	Connecticut Department of Publilc Health	PH-0567	09/30/2011
NY	New York State Department of Health	10899 NELAP	04/1/2011
NH	New Hampshire Environmental Lab	2516 NELAP	02/5/2011
RI	Rhode Island Department of Health	LAO00112	12/30/2010
NC	North Carolina Div. of Water Quality	652	12/31/2010
NJ	New Jersey DEP	MA007 NELAP	06/30/2011
FL	Florida Department of Health	E871027 NELAP	06/30/2011
VT	Vermont Department of Health Lead Laboratory	LL015036	07/30/2011
WA	State of Washington Department of Ecology	C2065	02/23/2011

con-test® ANALYTICAL LABORATORY
Phone: 413-525-2332
Fax: 413-525-6405
Email: info@contestlabs.com
www.contestlabs.com

CHAIN OF CUSTODY RECORD

10H0837

39 SPRUCE ST, 2ND FLOOR
EAST LONGMEADOW, MA 01028

Page 1 of 1

Company Name: TRC
Address: 650 Suffolk St.
Lowell MA 01854
Attention: David Sullivan
Project Location: City of New Bedford - NBHS
Sampled By: J. Ficco / J. Saunders

Telephone: (978) 656-3565
Project # 115058
Client PO # 26827

DATA DELIVERY (check one):
☐ FAX ☒ EMAIL ☐ WEBSITE CLIENT
Fax # :
Email: dsullivan@trcsolutions.com
Format: ☒ EXCEL ☐ PDF ☒ GIS KEY ☐ OTHER

Proposal Provided? (For Billing purposes) ☒ yes 2007 proposal date

State Form Required? ☒ yes ☐ no

ANALYSIS REQUESTED

Field ID	Sample Description	Lab #	Date Sampled Start Date/Time	Stop Date/Time	Composite	Grab	*Matrix Code	Conc. Code	TOC									# of containers / **Preservation / ~Container Code
									I									
									Iu									
									b									
	MW-5D (15-16.75)	-01	8/24/10	1000		X	S	U	X								(HOLD)	
	MW-7D (8-10)	02		1300		X	S	U	X									
	MW-7D (10-12)	03		1320		X	S	U	X									
	MW-7D (13-15)	04		1330		X	S	U	X									
	~~MW-7D (15-17)~~		~~8/24/10~~	~~1350~~		~~X~~	~~S~~	~~U~~	~~X~~		JS	8/27/10						
	MW-7D (20-22)	05	8/24/10	1400		X	S	U	X								(HOLD)	

Client Comments:

~Cont. Code:
A=amber glass
G=glass
P=plastic
ST=sterile
V=vial
S=summa can
T=tedlar bag
O=Other

Laboratory Comments:

Please use the following codes to let Con-Test know if a specific sample may be high in concentration in **Matrix/Conc.** Code Box:
H - High; **M** - Medium; **L** - Low; **C** - Clean; **U** - Unknown

Relinquished by: (signature)	Date/Time: 8/27/10 1300
Received by: (signature)	Date/Time: 8/27/10 1310
Relinquished by: (signature)	Date/Time: 8/27/10 1755
Received by: (signature)	Date/Time: 8-27 1755

Turnaround **
☐ 7-Day
☐ 10-Day
☒ Other 5 day
RUSH *
☐ *24-Hr ☐ *48-Hr
☐ *72-Hr ☐ *4-Day
* Require lab approval

Detection Limit Requirements
Regulations? MCP
Data Enhancement Project/RCP? ☒ Y ☐ N
Special Requirements or DL's: Per Quote

***Matrix Code:**
GW= groundwater
WW= wastewater
DW= drinking water
A = air
S = soil/solid
SL = sludge
O = other

****Preservation Codes:**
I = Iced
H = HCL
M = Methanol
N = Nitric Acid
S = Sulfuric Acid
B = Sodium bisulfate
O = Other
X = Na hydroxide
T = Na thiosulfate

** TURNAROUND TIME STARTS AT 9:00 A.M. THE DAY AFTER SAMPLE RECEIPT UNLESS THERE ARE QUESTIONS ON YOUR CHAIN. IF THIS FORM IS NOT FILLED OUT COMPLETELY OR IS INCORRECT, TURNAROUND TIME WILL NOT START UNTIL ALL QUESTIONS ARE ANSWERED BY OUR CLIENT.

AIHA, NELAC & WBE/DBE Certified

www.contestlabs.com

con-test ANALYTICAL LABORATORY

Sample Receipt Checklist

39 Spruce St.
East Longmeadow, MA.
01028
P: 413-525-2332
F: 413-525-6405

CLIENT NAME: TRC RECEIVED BY: RB DATE: 8-27

1) Was the chain(s) of custody relinquished and signed? (Yes) No

2) Does the chain agree with the samples? (Yes) No

If not, explain:

3) Are all the samples in good condition? (Yes) No

If not, explain:

4) How were the samples received:

On Ice [1] Direct from Sampling [ ] Ambient [ ] In Cooler(s) [1]

Were the samples received in Temperature Compliance of (2-6°C)? (Yes) No N/A

Temperature °C by Temp blank _____ Temperature °C by Temp gun 2.0

5) Are there Dissolved samples for the lab to filter? Yes (No)

Who was notified _____ Date _____ Time _____

6) Are there any samples "On Hold"? Yes (No) Stored where: [ ]

7) Are there any RUSH or SHORT HOLDING TIME samples? Yes (No)

Who was notified _____ Date _____ Time _____

8) Location where samples are stored: 19

Permission to subcontract samples? Yes No
(Walk-in clients only) if not already approved
Client Signature: _____

Containers received at Con-Test

	# of containers		# of containers
1 Liter Amber		8 oz amber/clear jar	5
500 mL Amber		4 oz amber/clear jar	
250 mL Amber (8oz amber)		2 oz amber/clear jar	
1 Liter Plastic		Other glass jar	
500 mL Plastic		Plastic Bag / Ziploc	
250 mL plastic		Air Cassette	
40 mL Vial - type listed below		SOC Kit	
Colisure / bacteria bottle		Tubes	
Dissolved Oxygen bottle		Non-ConTest Container	
Flashpoint bottle		Other	
Encore		PM 2.5 / PM 10	
Perchlorate Kit		PUF Cartridge	

aboratory Comments:

) mL vials: # HCl _____ # Methanol _____

Bisulfate _____ # DI Water _____

Thiosulfate _____ Unpreserved _____

Time and Date Frozen:

) all samples have the proper Acid pH: Yes No N/A _____

) all samples have the proper Base pH: Yes No N/A _____

ANALYTICAL REPORT

Lab Number:	L1013604
Client:	Con-Test Laboratory PO Box 591 39 Spruce Street East Longmeadow, MA 01028
ATTN:	Meghan Kelley
Phone:	(413) 525-2332
Project Name:	Not Specified
Project Number:	Not Specified
Report Date:	09/17/10

Certifications & Approvals: MA (M-MA086), NY NELAC (11148), CT (PH-0574), NH (2003), NJ (MA935), RI (LAO00065), ME (MA0086), PA (Registration #68-03671), USDA (Permit #S-72578), US Army Corps of Engineers, Naval FESC.

Eight Walkup Drive, Westborough, MA 01581-1019
508-898-9220 (Fax) 508-898-9193 800-624-9220 - www.alphalab.com

Project Name: Not Specified
Project Number: Not Specified

Lab Number: L1013604
Report Date: 09/17/10

Alpha Sample ID	Client ID	Sample Location	Collection Date/Time
L1013604-01	10H0837-02	Not Specified	08/24/10 13:00
L1013604-02	10H0837-03	Not Specified	08/24/10 13:20
L1013604-03	10H0837-04	Not Specified	08/24/10 13:30

Project Name: Not Specified
Project Number: Not Specified

Lab Number: L1013604
Report Date: 09/17/10

Case Narrative

The samples were received in accordance with the Chain of Custody and no significant deviations were encountered during the preparation or analysis unless otherwise noted. Sample Receipt, Container Information, and the Chain of Custody are located at the back of the report.

Results contained within this report relate only to the samples submitted under this Alpha Lab Number and meet all of the requirements of NELAC, for all NELAC accredited parameters. The data presented in this report is organized by parameter (i.e. VOC, SVOC, etc.). Sample specific Quality Control data (i.e. Surrogate Spike Recovery) is reported at the end of the target analyte list for each individual sample, followed by the Laboratory Batch Quality Control at the end of each parameter. If a sample was re-analyzed or re-extracted due to a required quality control corrective action and if both sets of data are reported, the Laboratory ID of the re-analysis or re-extraction is designated with an "R" or "RE", respectively. When multiple Batch Quality Control elements are reported (e.g. more than one LCS), the associated samples for each element are noted in the grey shaded header line of each data table. Any Laboratory Batch, Sample Specific % recovery or RPD value that is outside the listed Acceptance Criteria is bolded in the report. Definitions of all data qualifiers and acronyms used in this report are provided in the Glossary located at the back of the report.

Please see the associated ADEx data file for a comparison of laboratory reporting limits that were achieved with the regulatory Numerical Standards requested on the Chain of Custody.

For additional information, please contact Client Services at 800-624-9220.

I, the undersigned, attest under the pains and penalties of perjury that, to the best of my knowledge and belief and based upon my personal inquiry of those responsible for providing the information contained in this analytical report, such information is accurate and complete. This certificate of analysis is not complete unless this page accompanies any and all pages of this report.

Authorized Signature: Cynthia McQueen

Title: Technical Director/Representative

Date: 09/17/10

INORGANICS
&
MISCELLANEOUS

Project Name: Not Specified
Project Number: Not Specified

Lab Number: L1013604
Report Date: 09/17/10

SAMPLE RESULTS

Lab ID: L1013604-01
Client ID: 10H0837-02
Sample Location: Not Specified
Matrix: Soil

Date Collected: 08/24/10 13:00
Date Received: 09/02/10
Field Prep: Not Specified

Parameter	Result	Qualifier	Units	RL	MDL	Dilution Factor	Date Prepared	Date Analyzed	Analytical Method	Analyst
Total Organic Carbon - Mansfield Lab										
Total Organic Carbon	4.40		%	0.010	--	1	-	09/17/10 06:00	1,9060	NR
General Chemistry - Mansfield Lab										
Solids, Total	72.3		%	0.100	--	1	-	09/06/10 14:15	30,2540G	NR

Project Name: Not Specified
Project Number: Not Specified

Lab Number: L1013604
Report Date: 09/17/10

SAMPLE RESULTS

Lab ID: L1013604-02
Client ID: 10H0837-03
Sample Location: Not Specified
Matrix: Soil

Date Collected: 08/24/10 13:20
Date Received: 09/02/10
Field Prep: Not Specified

Parameter	Result	Qualifier	Units	RL	MDL	Dilution Factor	Date Prepared	Date Analyzed	Analytical Method	Analyst
Total Organic Carbon - Mansfield Lab										
Total Organic Carbon	23.9		%	0.010	--	1	-	09/17/10 06:00	1,9060	NR
General Chemistry - Mansfield Lab										
Solids, Total	27.8		%	0.100	--	1	-	09/06/10 14:15	30,2540G	NR

Project Name: Not Specified
Project Number: Not Specified

Lab Number: L1013604
Report Date: 09/17/10

SAMPLE RESULTS

Lab ID: L1013604-03
Client ID: 10H0837-04
Sample Location: Not Specified
Matrix: Soil

Date Collected: 08/24/10 13:30
Date Received: 09/02/10
Field Prep: Not Specified

Parameter	Result	Qualifier	Units	RL	MDL	Dilution Factor	Date Prepared	Date Analyzed	Analytical Method	Analyst
Total Organic Carbon - Mansfield Lab										
Total Organic Carbon	0.352		%	0.010	--	1	-	09/17/10 06:00	1,9060	NR
General Chemistry - Mansfield Lab										
Solids, Total	79.2		%	0.100	--	1	-	09/06/10 14:15	30,2540G	NR

Project Name:

Project Number: Not Specified

Lab Number: L1013604

Report Date: 09/17/10

Method Blank Analysis
Batch Quality Control

Parameter	Result	Qualifier	Units	RDL	Dilution Factor	Date Prepared	Date Analyzed	Analytical Method	Analyst
Total Organic Carbon - Mansfield Lab for sample(s): 01-03 Batch: WG431375-1									
Total Organic Carbon	ND		%	0.010	1	-	09/17/10 06:00	1,9060	NR

Lab Duplicate Analysis
Batch Quality Control

Project Name: Not Specified
Project Number: Not Specified

Lab Number: L1013604
Report Date: 09/17/10

Parameter	Native Sample	Duplicate Sample	Units	RPD	Qual	RPD Limits
General Chemistry - Mansfield Lab Associated sample(s): 01-03 QC Batch ID: WG431136-1 QC Sample: L1013268-01 Client ID: DUP Sample						
Solids, Total	70.5	71.0	%	1		20

Project Name: Not Specified
Project Number: Not Specified

Lab Number: L1013604
Report Date: 09/17/10

S.R.M. Standard Quality Control

Standard Reference Material (SRM): WG431375-2

Parameter	% Recovery	Qual	QC Criteria
Total Organic Carbon	113		75-125

Project Name: Not Specified
Project Number: Not Specified

Lab Number: L1013604
Report Date: 09/17/10

Sample Receipt and Container Information

Were project specific reporting limits specified? YES

Reagent H2O Preserved Vials Frozen on: NA

Cooler Information Custody Seal

Cooler	
A	Absent

Container Information

Container ID	Container Type	Cooler	pH	Temp deg C	Pres	Seal	Analysis(*)
L1013604-01A	Glass 250ml unpreserved	A	N/A	4	Y	Absent	A2-TS(7),A2-TOC-9060(28)
L1013604-02A	Glass 250ml unpreserved	A	N/A	4	Y	Absent	A2-TS(7),A2-TOC-9060(28)
L1013604-03A	Glass 250ml unpreserved	A	N/A	4	Y	Absent	A2-TS(7),A2-TOC-9060(28)

*Values in parentheses indicate holding time in days

Project Name: Not Specified
Project Number: Not Specified
Lab Number: L1013604
Report Date: 09/17/10

GLOSSARY

Acronyms

EPA	· Environmental Protection Agency.
LCS	· Laboratory Control Sample: A sample matrix, free from the analytes of interest, spiked with verified known amounts of analytes or a material containing known and verified amounts of analytes.
LCSD	· Laboratory Control Sample Duplicate: Refer to LCS.
MDL	· Method Detection Limit: This value represents the level to which target analyte concentrations are reported as estimated values, when those target analyte concentrations are quantified below the reporting limit (RL). The MDL includes any adjustments from dilutions, concentrations or moisture content, where applicable.
MS	· Matrix Spike Sample: A sample prepared by adding a known mass of target analyte to a specified amount of matrix sample for which an independent estimate of target analyte concentration is available.
MSD	· Matrix Spike Sample Duplicate: Refer to MS.
NA	· Not Applicable.
NC	· Not Calculated: Term is utilized when one or more of the results utilized in the calculation are non-detect at the parameter's reporting unit.
NI	· Not Ignitable.
RL	· Reporting Limit: The value at which an instrument can accurately measure an analyte at a specific concentration. The RL includes any adjustments from dilutions, concentrations or moisture content, where applicable.
RPD	· Relative Percent Difference: The results from matrix and/or matrix spike duplicates are primarily designed to assess the precision of analytical results in a given matrix and are expressed as relative percent difference (RPD). Values which are less than five times the reporting limit for any individual parameter are evaluated by utilizing the absolute difference between the values; although the RPD value will be provided in the report.

Terms

Analytical Method: Both the document from which the method originates and the analytical reference method. (Example: EPA 8260B is shown as 1,8260B.) The codes for the reference method documents are provided in the References section of the Addendum.

Data Qualifiers

A	- Spectra identified as "Aldol Condensation Product".
B	- The analyte was detected above the reporting limit in the associated method blank. Flag only applies to associated field samples that have detectable concentrations of the analyte at less than five times (5x) the concentration found in the blank. For MCP-related projects, flag only applies to associated field samples that have detectable concentrations of the analyte at less than ten times (10x) the concentration found in the blank. For DOD-related projects, flag only applies to associated field samples that have detectable concentrations of the analyte at less than ten times (10x) the concentration found in the blank AND the analyte was detected above one-half the reporting limit (or above the reporting limit for common lab contaminants) in the associated method blank.
D	- Concentration of analyte was quantified from diluted analysis. Flag only applies to field samples that have detectable concentrations of the analyte.
E	- Concentration of analyte exceeds the range of the calibration curve and/or linear range of the instrument.
H	- The analysis of pH was performed beyond the regulatory-required holding time of 15 minutes from the time of sample collection.
I	- The RPD between the results for the two columns exceeds the method-specified criteria; however, the lower value has been reported due to obvious interference.
P	- The RPD between the results for the two columns exceeds the method-specified criteria.
Q	- The quality control sample exceeds the associated acceptance criteria. Note: This flag is not applicable for matrix spike recoveries when the sample concentration is greater than 4x the spike added or for batch duplicate RPD when the sample concentrations are less than 5x the RL. (Metals only.)
R	- Analytical results are from sample re-analysis.

Report Format: Data Usability Report

Project Name:	Not Specified	**Lab Number:**	L1013604
Project Number:	Not Specified	**Report Date:**	09/17/10

Data Qualifiers

RE - Analytical results are from sample re-extraction.

J - Estimated value. This represents an estimated concentration for Tentatively Identified Compounds (TICs).

ND - Not detected at the reporting limit (RL) for the sample.

Report Format: Data Usability Report

Project Name: Not Specified
Project Number: Not Specified
Lab Number: L1013604
Report Date: 09/17/10

REFERENCES

1 Test Methods for Evaluating Solid Waste: Physical/Chemical Methods. EPA SW-846. Third Edition. Updates I - IIIA, 1997.

30 Standard Methods for the Examination of Water and Wastewater. APHA-AWWA-WPCF. 18th Edition. 1992.

LIMITATION OF LIABILITIES

Alpha Analytical performs services with reasonable care and diligence normal to the analytical testing laboratory industry. In the event of an error, the sole and exclusive responsibility of Alpha Analytical shall be to re-perform the work at it's own expense. In no event shall Alpha Analytical be held liable for any incidental, consequential or special damages, including but not limited to, damages in any way connected with the use of, interpretation of, information or analysis provided by Alpha Analytical.

We strongly urge our clients to comply with EPA protocol regarding sample volume, preservation, cooling, containers, sampling procedures, holding time and splitting of samples in the field.

Certificate/Approval Program Summary

Last revised July 19, 2010 - Westboro Facility

The following list includes only those analytes/methods for which certification/approval is currently held.
For a complete listing of analytes for the referenced methods, please contact your Alpha Customer Service Representative.

Connecticut Department of Public Health Certificate/Lab ID: PH-0574. ***NELAP Accredited Solid Waste/Soil.***

Drinking Water (Inorganic Parameters: Color, pH, Turbidity, Conductivity, Alkalinity, Chloride, Free Residual Chlorine, Fluoride, Calcium Hardness, Sulfate, Nitrate, Nitrite, Aluminum, Antimony, Arsenic, Barium, Beryllium, Cadmium, Calcium, Chromium, Copper, Iron, Lead, Magnesium, Manganese, Mercury, Molybdenum, Nickel, Potassium, Selenium, Silver, Sodium, Thallium, Vanadium, Zinc, Total Dissolved Solids, Total Organic Carbon, Total Cyanide, Perchlorate. Organic Parameters: Volatile Organics 524.2, Total Trihalomethanes 524.2, 1,2-Dibromo-3-chloropropane (DBCP), Ethylene Dibromide (EDB), 1,4-Dioxane (Mod 8270). Microbiology Parameters: Total Coliform-MF mEndo (SM9222B), Total Coliform – Colilert (SM9223 P/A), E. Coli. – Colilert (SM9223 P/A), HPC – Pour Plate (SM9215B), Fecal Coliform – MF m-FC (SM9222D))
Wastewater/Non-Potable Water (Inorganic Parameters: Color, pH, Conductivity, Acidity, Alkalinity, Chloride, Total Residual Chlorine, Fluoride, Total Hardness, Silica, Sulfate, Sulfide, Ammonia, Kjeldahl Nitrogen, Nitrate, Nitrite, O-Phosphate, Total Phosphorus, Aluminum, Antimony, Arsenic, Barium, Beryllium, Boron, Cadmium, Calcium, Chromium, Hexavalent Chromium, Cobalt, Copper, Iron, Lead, Magnesium, Manganese, Mercury, Molybdenum, Nickel, Potassium, Selenium, Silver, Sodium, Strontium, Thallium, Tin, Titanium, Vanadium, Zinc, Total Residue (Solids), Total Dissolved Solids, Total Suspended Solids (non-filterable), BOD, CBOD, COD, TOC, Total Cyanide, Phenolics, Foaming Agents (MBAS), Bromide, Oil and Grease. Organic Parameters: PCBs, Organochlorine Pesticides, Technical Chlordane, Toxaphene, 2,4-D, 2,4,5-T, 2,4,5-TP(Silvex), Acid Extractables (Phenols), Benzidines, Phthalate Esters, Nitrosamines, Nitroaromatics & Isophorone, Polynuclear Aromatic Hydrocarbons, Haloethers, Chlorinated Hydrocarbons, Volatile Organics, TPH (HEM/SGT), Extractable Petroleum Hydrocarbons (ETPH), MA-EPH, MA-VPH. Microbiology Parameters: Total Coliform – MF mEndo (SM9222B), Total Coliform – MTF (SM9221B), HPC – Pour Plate (SM9215B), Fecal Coliform – MF m-FC (SM9222D), Fecal Coliform – A-1 Broth (SM9221E).)
Solid Waste/Soil (Inorganic Parameters: pH, Sulfide, Aluminum, Antimony, Arsenic, Barium, Beryllium, Boron, Cadmium, Calcium, Chromium, Hexavalent Chromium, Cobalt, Copper, Iron, Lead, Magnesium, Manganese, Mercury, Molybdenum, Nickel, Potassium, Selenium, Silver, Sodium, Thallium, Tin, Vanadium, Zinc, Total Cyanide, Ignitability, Phenolics, Corrosivity, TCLP Leach (1311), SPLP Leach (1312 metals only), Reactivity. Organic Parameters: PCBs, PCBs in Oil, Organochlorine Pesticides, Technical Chlordane, Toxaphene, Extractable Petroleum Hydrocarbons (ETPH), MA-EPH, MA-VPH, Dicamba, 2,4-D, 2,4,5-T, 2,4,5-TP(Silvex), Volatile Organics, Acid Extractables (Phenols), 3.3'-Dichlorobenzidine, Phthalates, Nitrosamines, Nitroaromatics & Cyclic Ketones, PAHs, Haloethers, Chlorinated Hydrocarbons.)

Maine Department of Human Services Certificate/Lab ID: 2009024.
Drinking Water (Inorganic Parameters: SM9215B, 9222D, 9223B, EPA 180.1, 300.0, 353.2, SM2130B, 2320B, 4500Cl-D, 4500CN-C, 4500CN-E, 4500F-C, 4500H+B, 4500NO3-F, EPA 200.7, EPA 200.8, 245.1, EPA 300.0. Organic Parameters: 504.1, 524.2.)
Wastewater/Non-Potable Water (Inorganic Parameters: EPA 120.1, 1664A, 350.1, 351.1, 353.2, 410.4, 420.1, Lachat 10-107-06-1-B, SM2320B, 2340B, 2510B, 2540C, 2540D, 426C, 4500Cl-D, 4500Cl-E, 4500CN-C, 4500CN-E, 4500F-B, 4500F-C, 4500H+B, 4500Norg-B, 4500Norg-C, 4500NH3-B, 4500NH3-G, 4500NH3-H, 4500NO3-F, 4500P-B.5, 4500P-E, 5210B, 5220D, 5310C, EPA 200.7, 200.8, 245.1. Organic Parameters: 608, 624, ME DRO, ME GRO, MA EPH, MA VPH.)
*Solid Waste/Soil (*Organic Parameters: ME DRO, ME GRO, MA EPH, MA VPH.)

Massachusetts Department of Environmental Protection Certificate/Lab ID: M-MA086.
Drinking Water
Inorganic Parameters: (EPA 200.8 for: Sb,As,Ba,Be,Cd,Cr,Cu,Pb,Ni,Se,Tl)
(EPA 200.7 for: Ba,Be,Ca,Cd,Cr,Cu,Na,Ni) 245.1, (300.0 for: Nitrate-N, Fluoride, Sulfate)
353.2 for: Nitrate-N, Nitrite-N; SM4500NO3-F, 4500F-C, 4500CN-CE, EPA 180.1, SM2130B, SM4500Cl-D, 2320B, SM2540C, SM4500H-B.
Organic Parameters: (EPA 524.2 for: Trihalomethanes, Volatile Organics)
(504.1 for: 1,2-Dibromoethane, 1,2-Dibromo-3-Chloropropane), 314.0, 332.
Microbiology Parameters: SM9215B; ENZ. SUB. SM9223; MF-SM9222D
Non-Potable Water
Inorganic Parameters:, (EPA 200.8 for: Al,Sb,As,Be,Cd,Cr,Cu,Pb,Mn,Ni,Se,Ag,Tl,Zn)
(EPA 200.7 for: Al,Sb,As,Be,Cd,Cr,Co,Cu,Fe,Pb,Mn,Mo,Ni,Se,Ag,Sr,Ti,Tl, V,Zn,Ca,Mg,Na,K)
245.1, SM4500H,B, EPA 120.1, SM2510B, 2540C, 2540B, 2340B, 2320B, 4500CL-E, 4500F-BC, 426C, SM4500NH3-BH, (EPA 350.1 for: Ammonia-N), LACHAT 10-107-06-1-B for Ammonia-N, SM4500NO3-F, 353.2 for Nitrate-N, SM4500NH3-B,C-Titr, SM4500NH3-BC-NES, EPA 351.1, SM4500P-E, 4500P-B,E, 5220D, EPA 410.4, SM 5210B, 5310C, 4500CL-D, EPA 1664, SM14 510AC, EPA 420, SM4500-CN-CE, SM2540D.
Organic Parameters: (EPA 624 for Volatile Halocarbons, Volatile Aromatics)

(608 for: Chlordane, Aldrin, Dieldrin, DDD, DDE, DDT, Heptachlor, Heptachlor Epoxide, PCBs-Water), EPA 625 for SVOC Acid Extractables and SVOC Base/Neutral Extractables, 600/4-81-045-PCB-Oil

New Hampshire Department of Environmental Services Certificate/Lab ID: 200307. ***NELAP Accredited.***
Drinking Water (Inorganic Parameters: SM6215B, 9222B, 9223B Colilert, EPA 200.7, 200.8, 245.2, 120.1, 300.0, 314.0, SM4500CN-E, 4500H+B, 4500NO3-F, 2320B, 2510B, 2540C, 4500F-C, 5310C, 2120B, EPA 331.0. Organic Parameters: 504.1, 524.2, SM6251B.)
Non-Potable Water (Inorganic Parameters: SM9222D, 9221B, 9222B, 9221E-EC, EPA 200.7, 200.8, 245.1, 245.2, SW-846 6010B, 6020, 7196A, 7470A, SM3500-CR-D, EPA 120.1, 300.0, 350.1, 351.1, 353.2, 420.1, 1664A, SW-846 9010, 9030, 9040B, SM426C, SM2310B, 2540B, 2540D, 4500H+B, 4500NH3-H, 4500NH3-E, 4500NO2-B, 4500P-E, 4500-S2-D, 5210B, 2320B, 2540C, 4500F-C, 5310C, 5540C, LACHAT 10-117-07-1-B, LACHAT 10-107-06-1-B, LACHAT 10-107-04-1-C, LACHAT 10-107-04-1-J, LACHAT 10-117-07-1-A, SM4500CL-E, LACHAT 10-204-00-1-A, LACHAT 10-107-06-2-D. Organic Parameters: SW-846 3005A, 3015A, 3510C, 5030B, 8021B, 8260B, 8270C, 8330, EPA 624, 625, 608, SW-846 8082, 8081A.)
Solid & Chemical Materials (Inorganic Parameters: SW-846 6010B, 7196A, 7471A, 7.3.3.2, 7.3.4.2, 1010, 1030, 9010, 9012A, 9014, 9030B, 9040, 9045C, 9050C, 1311, 3005A, 3050B, 3051A. Organic Parameters: SW-846 3540C, 3545, 3580A, 5030B, 5035, 8021B, 8260B, 8270C, 8330, 8151A, 8082, 8081A.)

New Jersey Department of Environmental Protection Certificate/Lab ID: MA935. ***NELAP Accredited.***
Drinking Water (Inorganic Parameters: SM9222B, 9221E, 9223B, 9215B, 4500NO3-F, 4500F-C, EPA 300.0, 200.7, 2540C, 2320B, 314.0, SM2120B, 2510B, 5310C, SM4500H-B, EPA 200.8, 245.2. Organic Parameters: 504.1, SM6251B, 524.2.)
Non-Potable Water (Inorganic Parameters: SM5210B, EPA 410.4, SM5220D, 4500Cl-D, EPA 300.0, SM2120B, SM4500F-BC, EPA 200.7, 351.1, LACHAT 10-107-06-2-D, EPA 353.2, SM4500NO3-F, 4500NO2-B, EPA 1664A, SM5310B, C or D, 4500-PE, EPA 420.1, SM4500P-B5+E, 2540B, 2540C, 2540D, EPA 120.1, SM2510B, SM15 426C, SM9221CE, 9222D, 9221B, 9222B, 9215B, 2310B, 2320B, 4500NH3-H, 4500-S D, EPA 350.1, SM5210B, SW-846 3015, 6020, 7470A, 5540C, 4500H-B, EPA 200.8, SM3500Cr-D, EPA 245.1, 245.2, SW-846 9040B, 3005A, EPA 6010B, 7196A, SW-846 9010B, 9030B. Organic Parameters: SW-846 8260B, 8270C, 3510C, EPA 608, 624, 625, SW-846 5030B, 8021B, 8081A, 8082, 8151A, 8330, NJ OQA-QAM-025 Rev.7.)
Solid & Chemical Materials (Inorganic Parameters: SW-846 9040B, 3005A, 6010B, 7196A, 5030B, 9010B, 9030B, 1030, 1311, 3050B, 3051, 7471A, 9014, 9012A, 9045C, 9050A, 9065. Organic Parameters: SW-846 8021B, 8081A, 8082, 8151A, 8330, 8260B, 8270C, 1311, 1312, 3540C, 3545, 3550B, 3580A, 5035L, 5035H, NJ OQA-QAM-025 Rev.7.)

New York Department of Health Certificate/Lab ID: 11148. ***NELAP Accredited.***
Drinking Water (Inorganic Parameters: SM9223B, 9222B, 9215B, EPA 200.8, 200.7, 245.2, SM5310C, EPA 314.0, 332.0, SM2320B, EPA 300.0, SM2120B, 4500CN-E, 4500F-C, 4500H-B, 4500NO3-F, 2540C, EPA 120.1, SM 2510B. Organic Parameters: EPA 524.2, 504.1.)
Non-Potable Water (Inorganic Parameters: SM9221E, 9222D, 9221B, 9222B, 9215B, 5210B, EPA 410.4, SM5220D, 2310B-4a, 2320B, EPA 200.7, 300.0, LACHAT 10-117-07-1A or B, SM4500Cl-E, 4500F-C, SM15 426C, EPA 350.1, LACHAT 10-107-06-1-B, SM4500NH3-H, EPA 351.1, LACHAT 10-107-06-2, EPA 353.2, LACHAT 10-107-041-C, SM4500-NO3-F, 4500-NO2-B, 4500P-E, 2540C, 2540B, 2540D, EPA 200.8, EPA 6010B, 6020, EPA 7196A, S\M3500Cr-D, EPA 245.1, 245.2, 7470A, SM2120B, SM4500-CN-E LACHAT 10-204-00-1-A, EPA 9040B, SM4500-HB, EPA 1664A, SM5310C, EPA 420.1, SM14 510C, EPA 120.1, SM2510B, SM4500S-D, SM5540C, EPA 3005A, 3015. Organic Parameters: EPA 624, 8260B, 8270C, 625, 608, 8081A, 8151A, 8330, 8082, EPA 3510C, 5030B, 9010B, 9030B.)
Solid & Hazardous Waste (Inorganic Parameters: 1010, 1030, SW-846 Ch 7 Sec 7.3, EPA 6010B, 7196A, 7471A, 9012A, 9014, 9040B, 9045C, 9065, 9050, EPA 1311, 1312, 3005A, 3050B, 9010B, 9030B. Organic Parameters: EPA 8260B, 8270C, 8081A, 8151A, 8330, 8082, 3540C, 3545, 3546, 3580, 5030B, 5035.)

North Carolina Department of the Environment and Natural Resources Certificate/Lab ID : 666. Organic Parameters: MA-EPH, MA-VPH.

Pennsylvania Department of Environmental Protection Certificate/Lab ID : 68-03671. ***NELAP Accredited.***
Non-Potable Water (Organic Parameters: EPA 3510C, 5030B, 625, 624. 608, 8081A, 8082, 8151A, 8260B, 8270C, 8330)
Solid & Hazardous Waste (Inorganic Parameters: EPA 1010, 1030, 1311, 3050B, 3051, 6010B, EPA 7.3.3.2, EPA 7.3.4.2, 7196A, 7471A, 9010B, 9012A, 9014, 9040B, 9045C, 9050, 9065. Organic Parameters: 3540C, 3545, 3580A, 5035, 8021B, 8081A, 8082, 8151A, 8260B, 8270C, 8330)

Rhode Island Department of Health Certificate/Lab ID: LAO00065. ***NELAP Accredited via NY-DOH.***
Refer to MA-DEP Certificate for Potable and Non-Potable Water.
Refer to NY-DOH Certificate for Potable and Non-Potable Water.

Texas Commisson on Environmental Quality Certificate/Lab ID: T104704476-09-1. ***NELAP Accredited.***
Non-Potable Water (Inorganic Parameters: EPA 120.1, 1664, 200.7, 200.8, 245.1, 245.2, 300.0, 350.1, 351.1, 353.2, 376.2, 410.4, 420.1, 6010, 6020, 7196, 7470, 9040, SM 2120B, 2310B, 2320B, 2510B, 2540B, 2540C, 2540D, 426C, 4500CL-E, 4500CN-E, 4500F-C, 4500H+B, 4500NH3-H, 4500NO2B, 4500P-E, 4500 S2¯D, 510C, 5210B, 5220D, 5310C, 5540C. Organic Parameters: EPA 608, 624, 625, 8081, 8082, 8151, 8260, 8270, 8330.)

Solid & Hazardous Waste (Inorganic Parameters: EPA 1311, 1312, 9012, 9014, 9040, 9045, 9050, 9065.)

Department of Defense Certificate/Lab ID: L2217.
Drinking Water (Inorganic Parameters: SM 4500H-B. Organic Parameters: EPA 524.2, 504.1.)

Non-Potable Water (Inorganic Parameters: EPA 200.7, 200.8, 6010B, 6020, 245.1, 245.2, 7470A, 9040B, 300.0, 9251, 9038, 350.1, 353.2, 351.1, 120.1, 9050A , 410.4, 9060, 1664, 420.1, LACHAT 10-107-06-1-B, SM 4500CN-E, 4500H-B, 4500CL-E, 4500F-BC, 4500SO4-E, 426C, 4500NH3-B, 4500NH3-H, 4500NO3-F, 4500NO2-B, 4500Norg-C, 4500PE, 2510B, 5540C, 5220D, 5310C, 2540B, 2540C, 2540D, 510C, 4500S2-AD, 3005A, 3015, 9010B, 9030B. Organic Parameters: EPA 8260B, 8270C, 8330, 625, 8082, 8151A, 8081A, 3510C, 5030B, MassDEP EPH, MassDEP VPH.)

Solid & Hazardous Waste (Inorganic Parameters: EPA 200.7, 6010B, 7471A, 9040B, 9045C, 9065, 420.1, 9012A, 6860, 1311, 1312, 3050B, 9030B, 3051, 9010B, 3540C, SM 510ABC, 4500CN-CE, 2540G, SW-846 7.3, Organic Parameters: EPA 8260B, 8270C, 8330, 8082, 8081A, 8151A, 3545, 3546, 3580, 5035, MassDEP EPH, MassDEP VPH.)

Analytes Not Accredited by NELAP
Certification is not available by NELAP for the following analytes: **EPA 8260B:** Freon-113, 1,2,4,5-Tetramethylbenzene, 4-Ethyltoluene. **EPA 8330A:** PETN, Picric Acid, Nitroglycerine, 2,6-DANT, 2,4-DANT. **EPA 8270C:** Methyl naphthalene, Dimethyl naphthalene, Total Methylnapthalenes, Total Dimethylnaphthalenes, 1,4-Diphenylhydrazine (Azobenzene). **EPA 625:** 4-Chloroaniline. **EPA 350.1** for Ammonia in a Soil matrix.

Certificate/Approval Program Summary

Last revised July 19, 2010 – Mansfield Facility

The following list includes only those analytes/methods for which certification/approval is currently held.
For a complete listing of analytes for the referenced methods, please contact your Alpha Customer Service Representative.

Connecticut Department of Public Health Certificate/Lab ID: PH-0141.

Wastewater/Non-Potable Water (Inorganic Parameters: pH, Turbidity, Conductivity, Alkalinity, Aluminum, Antimony, Arsenic, Barium, Beryllium, Boron, Cadmium, Calcium, Chromium, Cobalt, Copper, Iron, Lead, Magnesium, Manganese, Mercury, Molybdenum, Nickel, Potassium, Selenium, Silver, Sodium, Strontium, Thallium, Tin, Vanadium, Zinc, Total Residue (Solids), Total Suspended Solids (non-filterable), Total Cyanide. Organic Parameters: PCBs, Organochlorine Pesticides, Technical Chlordane, Toxaphene, Acid Extractables, Benzidines, Phthalate Esters, Nitrosamines, Nitroaromatics & Isophorone, PAHs, Haloethers, Chlorinated Hydrocarbons, Volatile Organics.)

Solid Waste/Soil (Inorganic Parameters: pH, Aluminum, Antimony, Arsenic, Barium, Beryllium, Cadmium, Calcium, Chromium, Hexavalent Chromium, Cobalt, Copper, Iron, Lead, Magnesium, Manganese, Mercury, Molybdenum, Nickel, Potassium, Selenium, Silver, Sodium, Thallium, Vanadium, Zinc, Total Organic Carbon, Total Cyanide, Corrosivity, TCLP 1311. Organic Parameters: PCBs, Organochlorine Pesticides, Technical Chlordane, Toxaphene, Volatile Organics, Acid Extractables, Benzidines, Phthalates, Nitrosamines, Nitroaromatics & Cyclic Ketones, PAHs, Haloethers, Chlorinated Hydrocarbons.)

Florida Department of Health Certificate/Lab ID: E87814. ***NELAP Accredited.***

Non-Potable Water (Inorganic Parameters: SM2320B, EPA 120.1, SM2510B, EPA 245.1, EPA 150.1, EPA 160.2, SM2540D, EPA 335.2, SM2540G, EPA 180.1. Organic Parameters: EPA 625, 608.)

Solid & Chemical Materials (Inorganic Parameters: 6020, 7470, 7471, 9045, 9014. Organic Parameters: EPA 8260, 8270, 8082, 8081.)

Air & Emissions (EPA TO-15.)

Louisiana Department of Environmental Quality Certificate/Lab ID: 03090. ***NELAP Accredited.***

Non-Potable Water (Inorganic Parameters: EPA 120.1, 150.1, 160.2, 180.1, 200.8, 245.1, 310.1, 335.2, 608, 625, 1631, 3010, 3015, 3020, 6020, 9010, 9014, 9040, SM2320B, 2510B, 2540D, 2540G, 4500CN-E, 4500H-B, Organic Parameters: EPA 3510, 3580, 3630, 3640, 3660, 3665, 5030, 8015 (mod), 3570, 8081, 8082, 8260, 8270,)

Solid & Chemical Materials (Inorganic Parameters: 6020, 7196, 7470, 7471, 7474, 9010, 9014, 9040, 9045, 9060. Organic Parameters: EPA 8015 (mod), EPA 3570, 1311, 3050, 3051, 3060, 3580, 3630, 3640, 3660, 3665, 5035, 8081, 8082, 8260, 8270.)

Biological Tissue (Inorganic Parameters: EPA 6020. Organic Parameters: EPA 3570, 3510, 3610, 3630, 3640, 8270.)

Massachusetts Department of Environmental Protection Certificate/Lab ID: M-MA030.

Non-Potable Water (Inorganic Parameters: SM4500H+B. Organic Parameters: EPA 624.)

New Hampshire Department of Environmental Services Certificate/Lab ID: 2206. ***NELAP Accredited.***

Non-Potable Water (Inorganic Parameters: EPA 200.8, 245.1, 1631E, 120.1, 150.1, 180.1, 310.1, 335.2, 160.2, SM2540D, 2540G, 4500CN-E, 4500H+B, 2320B, 2510B. Organic Parameters: EPA 625, 608.)

New Jersey Department of Environmental Protection Certificate/Lab ID: MA015. ***NELAP Accredited.***

Non-Potable Water (Inorganic Parameters: SW-846 1312, 3010, 3020A, 3015, 6020, SM2320B, EPA 200.8, SM2540C, 2540D, 2540G, EPA 120.1, SM2510B, EPA 180.1, 245.1, 1631E, SW-846 9040B, 6020, 9010B, 9014 Organic Parameters: EPA 608, 625, SW-846 3510C, 3580A, 5030B, 3035L, 5035H, 3630C, 3640A, 3660B, 3665A, 8081A, 8082 8260B, 8270C)

Solid & Chemical Materials (Inorganic Parameters: SW-846 6020, 9010B, 9014, 1311, 1312, 3050B, 3051, 3060A, 7196A, 7470A, 7471A, 9045C, 9060. Organic Parameters: SW-846 3580A, 5030B, 3035L, 5035H, 3630C, 3640A, 3660B, 3665A, 8081A, 8082, 8260B, 8270C, 3570, 8015B.)

Atmospheric Organic Parameters (EPA TO-15)

Biological Tissue (Inorganic Parameters: SW-846 6020 Organic Parameters: SW-846 8270C, 3510C, 3570, 3610B, 3630C, 3640A)

New York Department of Health Certificate/Lab ID: 11627. ***NELAP Accredited.***

Non-Potable Water (Inorganic Parameters: EPA 310.1, SM2320B, EPA 365.2, 160.1, EPA 160.2, SM2540D, EPA 200.8, 6020, 1631E, 245.1, 335.2, 9014, 150.1, 9040B, 120.1, SM2510B, EPA 376.2, 180.1, 9010B. Organic Parameters: EPA 624, 8260B, 8270C, 608, 8081A, 625, 8082, 3510C, 3511, 5030B.)

Solid & Hazardous Waste (Inorganic Parameters: EPA 9040B, 9045C, SW-846 Ch7 Sec 7.3, EPA 6020, 7196A, 7471A, 7474, 9014, 9040B, 9045C, 9010B. Organic Parameters: EPA 8260B, 8270C, 8081A, DRO 8015B, 8082, 1311, 3050B, 3580, 3050B, 3035, 3570, 3051, 5035, 5030B.)

Air & Emissions (EPA TO-15.)

Rhode Island Department of Health Certificate/Lab ID: LAO00299. ***NELAP Accredited via LA-DEQ.***

Refer to MA-DEP Certificate for Non-Potable Water.

Refer to LA-DEQ Certificate for Non-Potable Water.

Texas Commission of Environmental Quality Certificate/Lab ID: T104704419-08-TX. ***NELAP Accredited.***

Solid & Chemical Materials (Inorganic Parameters: EPA 6020, 7470, 7471, 1311, 7196, 9014, 9040, 9045, 9060. Organic Parameters: EPA 8015, 8270, 8260, 8081, 8082.)

Air (Organic Parameters: EPA TO-15)

U.S. Army Corps of Engineers

Department of Defense Certificate/Lab ID: L2217.01.

Solid & Hazardous Waste (Inorganic Parameters: EPA 1311, 1312,3051, 6020, 747A, 7474, 9045C,9060, SM 2540G, ASTM D422-63. Organic Parameters: EPA 3580, 3570, 3540C, 5035, 8260B, 8270C, 8270 Alk-PAH, 8082, 8081A, 8015 (SHC), 8015 (DRO).

Air & Emissions (EPA TO-15.)

Analytes Not Accredited by NELAP
Certification is not available by NELAP for the following analytes: **8270C:** Biphenyl.

SUBCONTRACT ORDER

Con-Test Analytical Laboratory ALPHA Job # L1013604

10H0837

SENDING LABORATORY:

Con-Test Analytical Laboratory
39 Spruce Street
East Longmeadow, MA 01028
Phone: 413.525.2332
Fax: 413.525.6405
Project Manager: Meghan E. Kelley

RECEIVING LABORATORY:

Alpha Analytical Laboratory
8 Walkup Drive
Westborough, MA 01581
Phone :(508) 898-9220
Fax: (508) 898-9193

Analysis	Due	Expires	Laboratory ID	Comments
Sample ID: 10H0837-02	**Soil**	**Sampled:08/24/10 13:00**		
Total Organic Carbon Soil	09/03/10 23:59	09/07/10 13:00		
Containers Supplied:				
Sample ID: 10H0837-03	**Soil**	**Sampled:08/24/10 13:20**		
Total Organic Carbon Soil	09/03/10 23:59	09/07/10 13:20		
Containers Supplied:				
Sample ID: 10H0837-04	**Soil**	**Sampled:08/24/10 13:30**		
Total Organic Carbon Soil	09/03/10 23:59	09/07/10 13:30		
Containers Supplied:				

Released By	Date	Received By	Date
[signature]	9-2-10	[signature]	9-2-10 09:01
Released By	Date	Received By	Date

Serial No:09171016:17

SUBCONTRACT ORDE

Con-Test Analytical Laboratory ALPHA Job # L1013604

10H0837

SENDING LABORATORY:

Con-Test Analytical Laboratory
39 Spruce Street
East Longmeadow, MA 01028
Phone: 413.525.2332
Fax: 413.525.6405
Project Manager: Meghan E. Kelley

RECEIVING LABORATORY:

Alpha Analytical Laboratory
8 Walkup Drive
Westborough, MA 01581
Phone :(508) 898-9220
Fax: (508) 898-9193

Analysis	Due	Expires	Laboratory ID	Comments
Sample ID: 10H0837-02	**Soil**	**Sampled:08/24/10 13:00**	[redacted]	
Total Organic Carbon Soil	09/03/10 23:59	09/07/10 13:00		
Containers Supplied:				
Sample ID: 10H0837-03	**Soil**	**Sampled:08/24/10 13:20**	[redacted]	
Total Organic Carbon Soil	09/03/10 23:59	09/07/10 13:20		
Containers Supplied:				
Sample ID: 10H0837-04	**Soil**	**Sampled:08/24/10 13:30**	[redacted]	
Total Organic Carbon Soil	09/03/10 23:59	09/07/10 13:30		
Containers Supplied:				

Released By	Date	Received By	Date
[signature]	9-2-10	[signature]	9-2-10 09:01
[signature]		P. Gilbert	9-2-10 17:30
P. Gilbert	9/2/10 18:20	[signature]	9/2/10 19:00

Page 1 of 1

con-test® ANALYTICAL LABORATORY
39 Spruce Street * East Longmeadow, MA 01028 * FAX 413/525-6405 * TEL. 413/525-2332

September 20, 2010

David Sullivan
TRC Solutions - Lowell
650 Suffolk Street
Lowell, MA 01852

Project Location: City of New Bedford
Client Job Number:
Project Number: 115058
Laboratory Work Order Number: 10I0004

Enclosed are results of analyses for samples received by the laboratory on August 31, 2010. If you have any questions concerning this report, please feel free to contact me.

Sincerely,

Meghan E. Kelley
Project Manager

39 Spruce Street * East Longmeadow, MA 01028 * FAX 413/525-6405 * TEL. 413/525-2332

TRC Solutions - Lowell
650 Suffolk Street
Lowell, MA 01852
ATTN: David Sullivan

REPORT DATE: 9/20/2010

PURCHASE ORDER NUMBER:

PROJECT NUMBER: 115058

ANALYTICAL SUMMARY

WORK ORDER NUMBER: 10I0004

The results of analyses performed on the following samples submitted to the CON-TEST Analytical Laboratory are found in this report.

PROJECT LOCATION: City of New Bedford

FIELD SAMPLE #	LAB ID:	MATRIX	SAMPLE DESCRIPTION	TEST	SUB LAB
MW-27 (6-8)	10I0004-01	Soil		SM 2540G	
				SW-846 8260B	
MW-28 (8-10)	10I0004-02	Soil		SM 2540G	
				SW 846 9060	MA M-MA-086/CT PH-0574/NY11148
				SW-846 8260B	
MW-27	10I0004-03	Product/Solid		SW-846 8260B	

39 Spruce Street * East Longmeadow, MA 01028 * FAX 413/525-6405 * TEL. 413/525-2332

CASE NARRATIVE SUMMARY

All reported results are within defined laboratory quality control objectives unless listed below or otherwise qualified in this report.

con-test® ANALYTICAL LABORATORY

39 Spruce Street * East Longmeadow, MA 01028 * FAX 413/525-6405 * TEL. 413/525-2332

SW-846 8260B

Qualifications:

Laboratory fortified blank/laboratory control sample recovery and duplicate recovery are outside of control limits. Reported value for this compound is likely to be biased on the low side.

Analyte & Samples(s) Qualified:

Bromomethane, Chloroethane

10I0004-03[MW-27], B018744-BLK1, B018744-BS1, B018744-BSD1

Compound classified by MA CAM as difficult with acceptable recoveries of 40-160%. Recovery does not meet 70-130% criteria but does meet difficult compound criteria.

Analyte & Samples(s) Qualified:

Bromomethane, Chloromethane, Dichlorodifluoromethane (Freon 12)

B018595-BS1, B018595-BSD1, B018666-BS1, B018666-BSD1, B018744-BS1, B018744-BSD1

Laboratory fortified blank duplicate RPD is outside of control limits. Reduced precision is anticipated for any reported value for this compound.

Analyte & Samples(s) Qualified:

Chloroethane, Tetrahydrofuran

10I0004-03[MW-27], B018744-BLK1, B018744-BS1, B018744-BSD1, 10I0004-02[MW-28 (8-10)], B018666-BLK1, B018666-BS1, B018666-BSD1

Elevated reporting limit due to high concentration of target compounds. MA CAM reporting limit not met.

Analyte & Samples(s) Qualified:

10I0004-03[MW-27]

Surrogate was diluted below its calibration range due to elevated levels of target analytes.

Analyte & Samples(s) Qualified:

1,2-Dichloroethane-d4, 4-Bromofluorobenzene, Toluene-d8

10I0004-01RE1[MW-27 (6-8)], 10I0004-03[MW-27], 10I0004-03RE1[MW-27]

Continuing calibration did not meet method specifications and was biased on the low side for this compound. Significant uncertainty is associated with the reported value which is likely to be biased on the low side.

Analyte & Samples(s) Qualified:

1,2,3-Trichlorobenzene, 1,2,3-Trichloropropane, 1,2-Dibromo-3-chloropropane (DBCP), 2-Butanone (MEK), 2-Hexanone (MBK), 4-Methyl-2-pentanone (MIBK), Naphthalene, Tetrahydrofuran

10I0004-01[MW-27 (6-8)], 10I0004-03[MW-27], B018595-BLK1, B018595-BS1, B018595-BSD1, B018744-BLK1, B018744-BS1, B018744-BSD1

Continuing calibration did not meet method specifications and was biased on the high side for this compound. Significant uncertainty is associated with the reported value which is likely to be biased on the high side.

Analyte & Samples(s) Qualified:

Bromomethane, Chloromethane, Trichlorofluoromethane (Freon 11)

B018595-BS1, B018595-BSD1, B018666-BS1, B018666-BSD1, B018744-BS1, B018744-BSD1

Response factor is less than method specified minimum acceptable value. Reduced precision and accuracy are associated with reported result.

Analyte & Samples(s) Qualified:

1,4-Dioxane, 2-Butanone (MEK), Acetone, Tetrahydrofuran

10I0004-01[MW-27 (6-8)], 10I0004-02[MW-28 (8-10)], 10I0004-03[MW-27], B018595-BLK1, B018595-BS1, B018595-BSD1, B018666-BLK1, B018666-BS1, B018666-BSD1, B018744-BLK1, B018744-BS1, B018744-BSD1

39 Spruce Street * East Longmeadow, MA 01028 * FAX 413/525-6405 * TEL. 413/525-2332

SW-846 8260B

Laboratory control sample recoveries for required MCP Data Enhancement 8260 compounds were all within limits specified by the method except for “difficult analytes” where recovery control limits of 40-160% are used and/or unless otherwise listed in this narrative. Difficult analytes: MIBK, MEK, acetone, 1,4-dioxane, chloromethane, dichlorodifluoromethane, 2-hexanone, and bromomethane.

The results of analyses reported only relate to samples submitted to the Con-Test Analytical Laboratory for testing.
I certify that the analyses listed above, unless specifically listed as subcontracted, if any, were performed under my direction according to the approved methodologies listed in this document, and that based upon my inquiry of those individuuals immediately responsible for obtaining the information, the material contained in this report is, to the best of my knowledge and belief, accurate and complete.

Daren J. Damboragian
Laboratory Manager

con-test® ANALYTICAL LABORATORY

39 Spruce Street * East Longmeadow, MA 01028 * FAX 413/525-6405 * TEL. 413/525-2332

Project Location: City of New Bedford | Sample Description: | Work Order: 10I0004

Date Received: 8/31/2010

Field Sample #: MW-27 (6-8) | Sampled: 8/30/2010 13:40

Sample ID: 10I0004-01

Sample Matrix: Soil

Volatile Organic Compounds by GC/MS

Analyte	Results	RL	Units	Dilution	Flag	Method	Date Prepared	Date/Time Analyzed	Analyst
Acetone	ND	0.072	mg/Kg dry	1	V-16	SW-846 8260B	9/1/10	9/1/10 14:56	MFF
tert-Amyl Methyl Ether (TAME)	ND	0.00072	mg/Kg dry	1		SW-846 8260B	9/1/10	9/1/10 14:56	MFF
Benzene	ND	0.0014	mg/Kg dry	1		SW-846 8260B	9/1/10	9/1/10 14:56	MFF
Bromobenzene	ND	0.0014	mg/Kg dry	1		SW-846 8260B	9/1/10	9/1/10 14:56	MFF
Bromochloromethane	ND	0.0014	mg/Kg dry	1		SW-846 8260B	9/1/10	9/1/10 14:56	MFF
Bromodichloromethane	ND	0.0014	mg/Kg dry	1		SW-846 8260B	9/1/10	9/1/10 14:56	MFF
Bromoform	ND	0.0014	mg/Kg dry	1		SW-846 8260B	9/1/10	9/1/10 14:56	MFF
Bromomethane	ND	0.0072	mg/Kg dry	1		SW-846 8260B	9/1/10	9/1/10 14:56	MFF
2-Butanone (MEK)	ND	0.029	mg/Kg dry	1	V-16	SW-846 8260B	9/1/10	9/1/10 14:56	MFF
n-Butylbenzene	ND	0.0014	mg/Kg dry	1		SW-846 8260B	9/1/10	9/1/10 14:56	MFF
sec-Butylbenzene	ND	0.0014	mg/Kg dry	1		SW-846 8260B	9/1/10	9/1/10 14:56	MFF
tert-Butylbenzene	ND	0.0014	mg/Kg dry	1		SW-846 8260B	9/1/10	9/1/10 14:56	MFF
tert-Butyl Ethyl Ether (TBEE)	ND	0.00072	mg/Kg dry	1		SW-846 8260B	9/1/10	9/1/10 14:56	MFF
Carbon Disulfide	ND	0.0043	mg/Kg dry	1		SW-846 8260B	9/1/10	9/1/10 14:56	MFF
Carbon Tetrachloride	ND	0.0014	mg/Kg dry	1		SW-846 8260B	9/1/10	9/1/10 14:56	MFF
Chlorobenzene	ND	0.0014	mg/Kg dry	1		SW-846 8260B	9/1/10	9/1/10 14:56	MFF
Chlorodibromomethane	ND	0.00072	mg/Kg dry	1		SW-846 8260B	9/1/10	9/1/10 14:56	MFF
Chloroethane	ND	0.0072	mg/Kg dry	1		SW-846 8260B	9/1/10	9/1/10 14:56	MFF
Chloroform	ND	0.0029	mg/Kg dry	1		SW-846 8260B	9/1/10	9/1/10 14:56	MFF
Chloromethane	ND	0.0072	mg/Kg dry	1		SW-846 8260B	9/1/10	9/1/10 14:56	MFF
2-Chlorotoluene	ND	0.0014	mg/Kg dry	1		SW-846 8260B	9/1/10	9/1/10 14:56	MFF
4-Chlorotoluene	ND	0.0014	mg/Kg dry	1		SW-846 8260B	9/1/10	9/1/10 14:56	MFF
1,2-Dibromo-3-chloropropane (DBCP)	ND	0.0029	mg/Kg dry	1		SW-846 8260B	9/1/10	9/1/10 14:56	MFF
1,2-Dibromoethane (EDB)	ND	0.00072	mg/Kg dry	1		SW-846 8260B	9/1/10	9/1/10 14:56	MFF
Dibromomethane	ND	0.0014	mg/Kg dry	1		SW-846 8260B	9/1/10	9/1/10 14:56	MFF
1,2-Dichlorobenzene	ND	0.0014	mg/Kg dry	1		SW-846 8260B	9/1/10	9/1/10 14:56	MFF
1,3-Dichlorobenzene	ND	0.0014	mg/Kg dry	1		SW-846 8260B	9/1/10	9/1/10 14:56	MFF
1,4-Dichlorobenzene	ND	0.0014	mg/Kg dry	1		SW-846 8260B	9/1/10	9/1/10 14:56	MFF
Dichlorodifluoromethane (Freon 12)	ND	0.0072	mg/Kg dry	1		SW-846 8260B	9/1/10	9/1/10 14:56	MFF
1,1-Dichloroethane	ND	0.0014	mg/Kg dry	1		SW-846 8260B	9/1/10	9/1/10 14:56	MFF
1,2-Dichloroethane	ND	0.0014	mg/Kg dry	1		SW-846 8260B	9/1/10	9/1/10 14:56	MFF
1,1-Dichloroethylene	ND	0.0029	mg/Kg dry	1		SW-846 8260B	9/1/10	9/1/10 14:56	MFF
cis-1,2-Dichloroethylene	7.2	0.049	mg/Kg dry	1		SW-846 8260B	9/3/10	9/3/10 15:25	LBD
trans-1,2-Dichloroethylene	0.057	0.0014	mg/Kg dry	1		SW-846 8260B	9/1/10	9/1/10 14:56	MFF
1,2-Dichloropropane	ND	0.0014	mg/Kg dry	1		SW-846 8260B	9/1/10	9/1/10 14:56	MFF
1,3-Dichloropropane	ND	0.00072	mg/Kg dry	1		SW-846 8260B	9/1/10	9/1/10 14:56	MFF
2,2-Dichloropropane	ND	0.0014	mg/Kg dry	1		SW-846 8260B	9/1/10	9/1/10 14:56	MFF
1,1-Dichloropropene	ND	0.0014	mg/Kg dry	1		SW-846 8260B	9/1/10	9/1/10 14:56	MFF
cis-1,3-Dichloropropene	ND	0.00072	mg/Kg dry	1		SW-846 8260B	9/1/10	9/1/10 14:56	MFF
trans-1,3-Dichloropropene	ND	0.00072	mg/Kg dry	1		SW-846 8260B	9/1/10	9/1/10 14:56	MFF
Diethyl Ether	ND	0.0072	mg/Kg dry	1		SW-846 8260B	9/1/10	9/1/10 14:56	MFF
Diisopropyl Ether (DIPE)	ND	0.00072	mg/Kg dry	1		SW-846 8260B	9/1/10	9/1/10 14:56	MFF
1,4-Dioxane	ND	0.072	mg/Kg dry	1	V-16	SW-846 8260B	9/1/10	9/1/10 14:56	MFF
Ethylbenzene	0.0015	0.0014	mg/Kg dry	1		SW-846 8260B	9/1/10	9/1/10 14:56	MFF

con-test® ANALYTICAL LABORATORY

39 Spruce Street * East Longmeadow, MA 01028 * FAX 413/525-6405 * TEL. 413/525-2332

Project Location: City of New Bedford | Sample Description: | Work Order: 10I0004

Date Received: 8/31/2010

Field Sample #: MW-27 (6-8) | Sampled: 8/30/2010 13:40

Sample ID: 10I0004-01

Sample Matrix: Soil

Volatile Organic Compounds by GC/MS

Analyte	Results	RL	Units	Dilution	Flag	Method	Date Prepared	Date/Time Analyzed	Analyst
Hexachlorobutadiene	ND	0.0014	mg/Kg dry	1		SW-846 8260B	9/1/10	9/1/10 14:56	MFF
2-Hexanone (MBK)	ND	0.014	mg/Kg dry	1		SW-846 8260B	9/1/10	9/1/10 14:56	MFF
Isopropylbenzene (Cumene)	ND	0.0014	mg/Kg dry	1		SW-846 8260B	9/1/10	9/1/10 14:56	MFF
p-Isopropyltoluene (p-Cymene)	ND	0.0014	mg/Kg dry	1		SW-846 8260B	9/1/10	9/1/10 14:56	MFF
Methyl tert-Butyl Ether (MTBE)	ND	0.0029	mg/Kg dry	1		SW-846 8260B	9/1/10	9/1/10 14:56	MFF
Methylene Chloride	ND	0.0072	mg/Kg dry	1		SW-846 8260B	9/1/10	9/1/10 14:56	MFF
4-Methyl-2-pentanone (MIBK)	ND	0.014	mg/Kg dry	1		SW-846 8260B	9/1/10	9/1/10 14:56	MFF
Naphthalene	ND	0.0029	mg/Kg dry	1	V-05	SW-846 8260B	9/1/10	9/1/10 14:56	MFF
n-Propylbenzene	ND	0.0014	mg/Kg dry	1		SW-846 8260B	9/1/10	9/1/10 14:56	MFF
Styrene	ND	0.0014	mg/Kg dry	1		SW-846 8260B	9/1/10	9/1/10 14:56	MFF
1,1,1,2-Tetrachloroethane	ND	0.0014	mg/Kg dry	1		SW-846 8260B	9/1/10	9/1/10 14:56	MFF
1,1,2,2-Tetrachloroethane	ND	0.00072	mg/Kg dry	1		SW-846 8260B	9/1/10	9/1/10 14:56	MFF
Tetrachloroethylene	ND	0.0014	mg/Kg dry	1		SW-846 8260B	9/1/10	9/1/10 14:56	MFF
Tetrahydrofuran	ND	0.0072	mg/Kg dry	1	V-16	SW-846 8260B	9/1/10	9/1/10 14:56	MFF
Toluene	ND	0.0014	mg/Kg dry	1		SW-846 8260B	9/1/10	9/1/10 14:56	MFF
1,2,3-Trichlorobenzene	ND	0.0029	mg/Kg dry	1	V-05	SW-846 8260B	9/1/10	9/1/10 14:56	MFF
1,2,4-Trichlorobenzene	0.0017	0.0014	mg/Kg dry	1		SW-846 8260B	9/1/10	9/1/10 14:56	MFF
1,1,1-Trichloroethane	ND	0.0014	mg/Kg dry	1		SW-846 8260B	9/1/10	9/1/10 14:56	MFF
1,1,2-Trichloroethane	ND	0.0014	mg/Kg dry	1		SW-846 8260B	9/1/10	9/1/10 14:56	MFF
Trichloroethylene	110	4.9	mg/Kg dry	100		SW-846 8260B	9/7/10	9/7/10 13:49	LBD
Trichlorofluoromethane (Freon 11)	ND	0.0072	mg/Kg dry	1		SW-846 8260B	9/1/10	9/1/10 14:56	MFF
1,2,3-Trichloropropane	ND	0.0014	mg/Kg dry	1		SW-846 8260B	9/1/10	9/1/10 14:56	MFF
1,2,4-Trimethylbenzene	ND	0.0014	mg/Kg dry	1		SW-846 8260B	9/1/10	9/1/10 14:56	MFF
1,3,5-Trimethylbenzene	ND	0.0014	mg/Kg dry	1		SW-846 8260B	9/1/10	9/1/10 14:56	MFF
Vinyl Chloride	ND	0.0072	mg/Kg dry	1		SW-846 8260B	9/1/10	9/1/10 14:56	MFF
m+p Xylene	ND	0.0029	mg/Kg dry	1		SW-846 8260B	9/1/10	9/1/10 14:56	MFF
o-Xylene	ND	0.0014	mg/Kg dry	1		SW-846 8260B	9/1/10	9/1/10 14:56	MFF

Surrogates	% Recovery	Recovery Limits	Flag	
1,2-Dichloroethane-d4	*	70-130	S-21	9/7/10 13:49
1,2-Dichloroethane-d4	100	70-130		9/3/10 15:25
1,2-Dichloroethane-d4	103	70-130		9/1/10 14:56
Toluene-d8	96.6	70-130		9/1/10 14:56
Toluene-d8	*	70-130	S-21	9/7/10 13:49
Toluene-d8	94.7	70-130		9/3/10 15:25
4-Bromofluorobenzene	*	70-130	S-21	9/7/10 13:49
4-Bromofluorobenzene	87.2	70-130		9/3/10 15:25
4-Bromofluorobenzene	96.8	70-130		9/1/10 14:56

39 Spruce Street * East Longmeadow, MA 01028 * FAX 413/525-6405 * TEL. 413/525-2332

Project Location: City of New Bedford
Sample Description:
Work Order: 10I0004

Date Received: 8/31/2010

Field Sample #: MW-27 (6-8)
Sampled: 8/30/2010 13:40

Sample ID: 10I0004-01

Sample Matrix: Soil

Conventional Chemistry Parameters by EPA/APHA/SW-846 Methods (Total)

Analyte	Results	RL	Units	Dilution	Flag	Method	Date Prepared	Date/Time Analyzed	Analyst
% Solids	87.9		% Wt	1		SM 2540G	9/2/10	9/2/10 14:54	FWD

con-test® ANALYTICAL LABORATORY

39 Spruce Street * East Longmeadow, MA 01028 * FAX 413/525-6405 * TEL. 413/525-2332

Project Location: City of New Bedford | Sample Description: | Work Order: 10I0004

Date Received: 8/31/2010

Field Sample #: MW-28 (8-10) | Sampled: 8/30/2010 14:45

Sample ID: 10I0004-02

Sample Matrix: Soil

Volatile Organic Compounds by GC/MS

Analyte	Results	RL	Units	Dilution	Flag	Method	Date Prepared	Date/Time Analyzed	Analyst
Acetone	ND	0.10	mg/Kg dry	1	V-16	SW-846 8260B	9/2/10	9/2/10 19:18	MFF
tert-Amyl Methyl Ether (TAME)	ND	0.0010	mg/Kg dry	1		SW-846 8260B	9/2/10	9/2/10 19:18	MFF
Benzene	ND	0.0020	mg/Kg dry	1		SW-846 8260B	9/2/10	9/2/10 19:18	MFF
Bromobenzene	ND	0.0020	mg/Kg dry	1		SW-846 8260B	9/2/10	9/2/10 19:18	MFF
Bromochloromethane	ND	0.0020	mg/Kg dry	1		SW-846 8260B	9/2/10	9/2/10 19:18	MFF
Bromodichloromethane	ND	0.0020	mg/Kg dry	1		SW-846 8260B	9/2/10	9/2/10 19:18	MFF
Bromoform	ND	0.0020	mg/Kg dry	1		SW-846 8260B	9/2/10	9/2/10 19:18	MFF
Bromomethane	ND	0.010	mg/Kg dry	1		SW-846 8260B	9/2/10	9/2/10 19:18	MFF
2-Butanone (MEK)	ND	0.041	mg/Kg dry	1	V-16	SW-846 8260B	9/2/10	9/2/10 19:18	MFF
n-Butylbenzene	ND	0.0020	mg/Kg dry	1		SW-846 8260B	9/2/10	9/2/10 19:18	MFF
sec-Butylbenzene	ND	0.0020	mg/Kg dry	1		SW-846 8260B	9/2/10	9/2/10 19:18	MFF
tert-Butylbenzene	ND	0.0020	mg/Kg dry	1		SW-846 8260B	9/2/10	9/2/10 19:18	MFF
tert-Butyl Ethyl Ether (TBEE)	ND	0.0010	mg/Kg dry	1		SW-846 8260B	9/2/10	9/2/10 19:18	MFF
Carbon Disulfide	ND	0.0061	mg/Kg dry	1		SW-846 8260B	9/2/10	9/2/10 19:18	MFF
Carbon Tetrachloride	ND	0.0020	mg/Kg dry	1		SW-846 8260B	9/2/10	9/2/10 19:18	MFF
Chlorobenzene	ND	0.0020	mg/Kg dry	1		SW-846 8260B	9/2/10	9/2/10 19:18	MFF
Chlorodibromomethane	ND	0.0010	mg/Kg dry	1		SW-846 8260B	9/2/10	9/2/10 19:18	MFF
Chloroethane	ND	0.010	mg/Kg dry	1		SW-846 8260B	9/2/10	9/2/10 19:18	MFF
Chloroform	ND	0.0041	mg/Kg dry	1		SW-846 8260B	9/2/10	9/2/10 19:18	MFF
Chloromethane	ND	0.010	mg/Kg dry	1		SW-846 8260B	9/2/10	9/2/10 19:18	MFF
2-Chlorotoluene	ND	0.0020	mg/Kg dry	1		SW-846 8260B	9/2/10	9/2/10 19:18	MFF
4-Chlorotoluene	ND	0.0020	mg/Kg dry	1		SW-846 8260B	9/2/10	9/2/10 19:18	MFF
1,2-Dibromo-3-chloropropane (DBCP)	ND	0.0041	mg/Kg dry	1		SW-846 8260B	9/2/10	9/2/10 19:18	MFF
1,2-Dibromoethane (EDB)	ND	0.0010	mg/Kg dry	1		SW-846 8260B	9/2/10	9/2/10 19:18	MFF
Dibromomethane	ND	0.0020	mg/Kg dry	1		SW-846 8260B	9/2/10	9/2/10 19:18	MFF
1,2-Dichlorobenzene	ND	0.0020	mg/Kg dry	1		SW-846 8260B	9/2/10	9/2/10 19:18	MFF
1,3-Dichlorobenzene	ND	0.0020	mg/Kg dry	1		SW-846 8260B	9/2/10	9/2/10 19:18	MFF
1,4-Dichlorobenzene	0.0086	0.0020	mg/Kg dry	1		SW-846 8260B	9/2/10	9/2/10 19:18	MFF
Dichlorodifluoromethane (Freon 12)	ND	0.010	mg/Kg dry	1		SW-846 8260B	9/2/10	9/2/10 19:18	MFF
1,1-Dichloroethane	ND	0.0020	mg/Kg dry	1		SW-846 8260B	9/2/10	9/2/10 19:18	MFF
1,2-Dichloroethane	ND	0.0020	mg/Kg dry	1		SW-846 8260B	9/2/10	9/2/10 19:18	MFF
1,1-Dichloroethylene	ND	0.0041	mg/Kg dry	1		SW-846 8260B	9/2/10	9/2/10 19:18	MFF
cis-1,2-Dichloroethylene	0.022	0.0020	mg/Kg dry	1		SW-846 8260B	9/2/10	9/2/10 19:18	MFF
trans-1,2-Dichloroethylene	0.0025	0.0020	mg/Kg dry	1		SW-846 8260B	9/2/10	9/2/10 19:18	MFF
1,2-Dichloropropane	ND	0.0020	mg/Kg dry	1		SW-846 8260B	9/2/10	9/2/10 19:18	MFF
1,3-Dichloropropane	ND	0.0010	mg/Kg dry	1		SW-846 8260B	9/2/10	9/2/10 19:18	MFF
2,2-Dichloropropane	ND	0.0020	mg/Kg dry	1		SW-846 8260B	9/2/10	9/2/10 19:18	MFF
1,1-Dichloropropene	ND	0.0020	mg/Kg dry	1		SW-846 8260B	9/2/10	9/2/10 19:18	MFF
cis-1,3-Dichloropropene	ND	0.0010	mg/Kg dry	1		SW-846 8260B	9/2/10	9/2/10 19:18	MFF
trans-1,3-Dichloropropene	ND	0.0010	mg/Kg dry	1		SW-846 8260B	9/2/10	9/2/10 19:18	MFF
Diethyl Ether	ND	0.010	mg/Kg dry	1		SW-846 8260B	9/2/10	9/2/10 19:18	MFF
Diisopropyl Ether (DIPE)	ND	0.0010	mg/Kg dry	1		SW-846 8260B	9/2/10	9/2/10 19:18	MFF
1,4-Dioxane	ND	0.10	mg/Kg dry	1	V-16	SW-846 8260B	9/2/10	9/2/10 19:18	MFF
Ethylbenzene	ND	0.0020	mg/Kg dry	1		SW-846 8260B	9/2/10	9/2/10 19:18	MFF

con-test® ANALYTICAL LABORATORY

39 Spruce Street * East Longmeadow, MA 01028 * FAX 413/525-6405 * TEL. 413/525-2332

Project Location: City of New Bedford | Sample Description: | Work Order: 10I0004

Date Received: 8/31/2010

Field Sample #: MW-28 (8-10) | Sampled: 8/30/2010 14:45

Sample ID: 10I0004-02

Sample Matrix: Soil

Volatile Organic Compounds by GC/MS

Analyte	Results	RL	Units	Dilution	Flag	Method	Date Prepared	Date/Time Analyzed	Analyst
Hexachlorobutadiene	ND	0.0020	mg/Kg dry	1		SW-846 8260B	9/2/10	9/2/10 19:18	MFF
2-Hexanone (MBK)	ND	0.020	mg/Kg dry	1		SW-846 8260B	9/2/10	9/2/10 19:18	MFF
Isopropylbenzene (Cumene)	ND	0.0020	mg/Kg dry	1		SW-846 8260B	9/2/10	9/2/10 19:18	MFF
p-Isopropyltoluene (p-Cymene)	ND	0.0020	mg/Kg dry	1		SW-846 8260B	9/2/10	9/2/10 19:18	MFF
Methyl tert-Butyl Ether (MTBE)	ND	0.0041	mg/Kg dry	1		SW-846 8260B	9/2/10	9/2/10 19:18	MFF
Methylene Chloride	ND	0.010	mg/Kg dry	1		SW-846 8260B	9/2/10	9/2/10 19:18	MFF
4-Methyl-2-pentanone (MIBK)	ND	0.020	mg/Kg dry	1		SW-846 8260B	9/2/10	9/2/10 19:18	MFF
Naphthalene	ND	0.0041	mg/Kg dry	1		SW-846 8260B	9/2/10	9/2/10 19:18	MFF
n-Propylbenzene	ND	0.0020	mg/Kg dry	1		SW-846 8260B	9/2/10	9/2/10 19:18	MFF
Styrene	0.0064	0.0020	mg/Kg dry	1		SW-846 8260B	9/2/10	9/2/10 19:18	MFF
1,1,1,2-Tetrachloroethane	ND	0.0020	mg/Kg dry	1		SW-846 8260B	9/2/10	9/2/10 19:18	MFF
1,1,2,2-Tetrachloroethane	ND	0.0010	mg/Kg dry	1		SW-846 8260B	9/2/10	9/2/10 19:18	MFF
Tetrachloroethylene	ND	0.0020	mg/Kg dry	1		SW-846 8260B	9/2/10	9/2/10 19:18	MFF
Tetrahydrofuran	ND	0.010	mg/Kg dry	1	R-05, V-16	SW-846 8260B	9/2/10	9/2/10 19:18	MFF
Toluene	ND	0.0020	mg/Kg dry	1		SW-846 8260B	9/2/10	9/2/10 19:18	MFF
1,2,3-Trichlorobenzene	0.0075	0.0041	mg/Kg dry	1		SW-846 8260B	9/2/10	9/2/10 19:18	MFF
1,2,4-Trichlorobenzene	0.034	0.0020	mg/Kg dry	1		SW-846 8260B	9/2/10	9/2/10 19:18	MFF
1,1,1-Trichloroethane	ND	0.0020	mg/Kg dry	1		SW-846 8260B	9/2/10	9/2/10 19:18	MFF
1,1,2-Trichloroethane	ND	0.0020	mg/Kg dry	1		SW-846 8260B	9/2/10	9/2/10 19:18	MFF
Trichloroethylene	2.4	0.65	mg/Kg dry	10		SW-846 8260B	9/3/10	9/3/10 14:24	LBD
Trichlorofluoromethane (Freon 11)	ND	0.010	mg/Kg dry	1		SW-846 8260B	9/2/10	9/2/10 19:18	MFF
1,2,3-Trichloropropane	ND	0.0020	mg/Kg dry	1		SW-846 8260B	9/2/10	9/2/10 19:18	MFF
1,2,4-Trimethylbenzene	ND	0.0020	mg/Kg dry	1		SW-846 8260B	9/2/10	9/2/10 19:18	MFF
1,3,5-Trimethylbenzene	ND	0.0020	mg/Kg dry	1		SW-846 8260B	9/2/10	9/2/10 19:18	MFF
Vinyl Chloride	ND	0.010	mg/Kg dry	1		SW-846 8260B	9/2/10	9/2/10 19:18	MFF
m+p Xylene	ND	0.0041	mg/Kg dry	1		SW-846 8260B	9/2/10	9/2/10 19:18	MFF
o-Xylene	ND	0.0020	mg/Kg dry	1		SW-846 8260B	9/2/10	9/2/10 19:18	MFF

Surrogates	% Recovery	Recovery Limits	Flag	
1,2-Dichloroethane-d4	95.7	70-130		9/3/10 14:24
1,2-Dichloroethane-d4	110	70-130		9/2/10 19:18
Toluene-d8	87.4	70-130		9/3/10 14:24
Toluene-d8	96.0	70-130		9/2/10 19:18
4-Bromofluorobenzene	78.3	70-130		9/3/10 14:24
4-Bromofluorobenzene	101	70-130		9/2/10 19:18

39 Spruce Street * East Longmeadow, MA 01028 * FAX 413/525-6405 * TEL. 413/525-2332

Project Location: City of New Bedford
Sample Description:
Work Order: 10I0004

Date Received: 8/31/2010

Field Sample #: MW-28 (8-10)
Sampled: 8/30/2010 14:45

Sample ID: 10I0004-02

Sample Matrix: Soil

Conventional Chemistry Parameters by EPA/APHA/SW-846 Methods (Total)

Analyte	Results	RL	Units	Dilution	Flag	Method	Date Prepared	Date/Time Analyzed	Analyst
% Solids	90.6		% Wt	1		SM 2540G	9/2/10	9/2/10 14:54	FWD

39 Spruce Street * East Longmeadow, MA 01028 * FAX 413/525-6405 * TEL. 413/525-2332

Project Location: City of New Bedford
Sample Description:
Work Order: 10I0004

Date Received: 8/31/2010

Field Sample #: MW-28 (8-10)
Sampled: 8/30/2010 14:45

Sample ID: 10I0004-02

Sample Matrix: Soil

Conventional Chemistry Parameters by EPA/APHA/SW-8

Analyte	Results	RL	Units	Dilution	Flag	Method	Date Prepared	Date/Time Analyzed	Analyst
Total Organic Carbon	0.101	0.01	%	1		SW 846 9060		9/17/10 6:00	AAL

con-test® ANALYTICAL LABORATORY

39 Spruce Street * East Longmeadow, MA 01028 * FAX 413/525-6405 * TEL. 413/525-2332

Project Location: City of New Bedford | Sample Description: | Work Order: 10I0004

Date Received: 8/31/2010

Field Sample #: MW-27 | Sampled: 8/30/2010 17:00

Sample ID: 10I0004-03

Sample Matrix: Product/Solid

Sample Flags: RL-05

Volatile Organic Compounds by GC/MS

Analyte	Results	RL	Units	Dilution	Flag	Method	Date Prepared	Date/Time Analyzed	Analyst
Acetone	ND	1100	mg/Kg wet	100		SW-846 8260B	9/3/10	9/3/10 16:57	LBD
tert-Amyl Methyl Ether (TAME)	ND	45	mg/Kg wet	100		SW-846 8260B	9/3/10	9/3/10 16:57	LBD
Benzene	ND	22	mg/Kg wet	100		SW-846 8260B	9/3/10	9/3/10 16:57	LBD
Bromobenzene	ND	22	mg/Kg wet	100		SW-846 8260B	9/3/10	9/3/10 16:57	LBD
Bromochloromethane	ND	22	mg/Kg wet	100		SW-846 8260B	9/3/10	9/3/10 16:57	LBD
Bromodichloromethane	ND	45	mg/Kg wet	100		SW-846 8260B	9/3/10	9/3/10 16:57	LBD
Bromoform	ND	220	mg/Kg wet	100		SW-846 8260B	9/3/10	9/3/10 16:57	LBD
Bromomethane	ND	45	mg/Kg wet	100	L-04	SW-846 8260B	9/3/10	9/3/10 16:57	LBD
2-Butanone (MEK)	ND	450	mg/Kg wet	100	V-05	SW-846 8260B	9/3/10	9/3/10 16:57	LBD
n-Butylbenzene	ND	22	mg/Kg wet	100		SW-846 8260B	9/3/10	9/3/10 16:57	LBD
sec-Butylbenzene	ND	22	mg/Kg wet	100		SW-846 8260B	9/3/10	9/3/10 16:57	LBD
tert-Butylbenzene	ND	22	mg/Kg wet	100		SW-846 8260B	9/3/10	9/3/10 16:57	LBD
tert-Butyl Ethyl Ether (TBEE)	ND	45	mg/Kg wet	100		SW-846 8260B	9/3/10	9/3/10 16:57	LBD
Carbon Disulfide	ND	220	mg/Kg wet	100		SW-846 8260B	9/3/10	9/3/10 16:57	LBD
Carbon Tetrachloride	ND	220	mg/Kg wet	100		SW-846 8260B	9/3/10	9/3/10 16:57	LBD
Chlorobenzene	ND	22	mg/Kg wet	100		SW-846 8260B	9/3/10	9/3/10 16:57	LBD
Chlorodibromomethane	ND	90	mg/Kg wet	100		SW-846 8260B	9/3/10	9/3/10 16:57	LBD
Chloroethane	ND	450	mg/Kg wet	100	L-04, R-05	SW-846 8260B	9/3/10	9/3/10 16:57	LBD
Chloroform	ND	45	mg/Kg wet	100		SW-846 8260B	9/3/10	9/3/10 16:57	LBD
Chloromethane	ND	45	mg/Kg wet	100		SW-846 8260B	9/3/10	9/3/10 16:57	LBD
2-Chlorotoluene	ND	22	mg/Kg wet	100		SW-846 8260B	9/3/10	9/3/10 16:57	LBD
4-Chlorotoluene	ND	22	mg/Kg wet	100		SW-846 8260B	9/3/10	9/3/10 16:57	LBD
1,2-Dibromo-3-chloropropane (DBCP)	ND	220	mg/Kg wet	100	V-05	SW-846 8260B	9/3/10	9/3/10 16:57	LBD
1,2-Dibromoethane (EDB)	ND	90	mg/Kg wet	100		SW-846 8260B	9/3/10	9/3/10 16:57	LBD
Dibromomethane	ND	22	mg/Kg wet	100		SW-846 8260B	9/3/10	9/3/10 16:57	LBD
1,2-Dichlorobenzene	22	22	mg/Kg wet	100		SW-846 8260B	9/3/10	9/3/10 16:57	LBD
1,3-Dichlorobenzene	ND	22	mg/Kg wet	100		SW-846 8260B	9/3/10	9/3/10 16:57	LBD
1,4-Dichlorobenzene	29	22	mg/Kg wet	100		SW-846 8260B	9/3/10	9/3/10 16:57	LBD
Dichlorodifluoromethane (Freon 12)	ND	45	mg/Kg wet	100		SW-846 8260B	9/3/10	9/3/10 16:57	LBD
1,1-Dichloroethane	ND	22	mg/Kg wet	100		SW-846 8260B	9/3/10	9/3/10 16:57	LBD
1,2-Dichloroethane	ND	22	mg/Kg wet	100		SW-846 8260B	9/3/10	9/3/10 16:57	LBD
1,1-Dichloroethylene	ND	22	mg/Kg wet	100		SW-846 8260B	9/3/10	9/3/10 16:57	LBD
cis-1,2-Dichloroethylene	990	22	mg/Kg wet	100		SW-846 8260B	9/3/10	9/3/10 16:57	LBD
trans-1,2-Dichloroethylene	87	22	mg/Kg wet	100		SW-846 8260B	9/3/10	9/3/10 16:57	LBD
1,2-Dichloropropane	ND	22	mg/Kg wet	100		SW-846 8260B	9/3/10	9/3/10 16:57	LBD
1,3-Dichloropropane	ND	11	mg/Kg wet	100		SW-846 8260B	9/3/10	9/3/10 16:57	LBD
2,2-Dichloropropane	ND	220	mg/Kg wet	100		SW-846 8260B	9/3/10	9/3/10 16:57	LBD
1,1-Dichloropropene	ND	45	mg/Kg wet	100		SW-846 8260B	9/3/10	9/3/10 16:57	LBD
cis-1,3-Dichloropropene	ND	45	mg/Kg wet	100		SW-846 8260B	9/3/10	9/3/10 16:57	LBD
trans-1,3-Dichloropropene	ND	45	mg/Kg wet	100		SW-846 8260B	9/3/10	9/3/10 16:57	LBD
Diethyl Ether	ND	45	mg/Kg wet	100		SW-846 8260B	9/3/10	9/3/10 16:57	LBD
Diisopropyl Ether (DIPE)	ND	11	mg/Kg wet	100		SW-846 8260B	9/3/10	9/3/10 16:57	LBD
1,4-Dioxane	ND	2200	mg/Kg wet	100	V-16	SW-846 8260B	9/3/10	9/3/10 16:57	LBD
Ethylbenzene	47	22	mg/Kg wet	100		SW-846 8260B	9/3/10	9/3/10 16:57	LBD

con-test® ANALYTICAL LABORATORY

39 Spruce Street * East Longmeadow, MA 01028 * FAX 413/525-6405 * TEL. 413/525-2332

Project Location: City of New Bedford | Sample Description: | Work Order: 10I0004

Date Received: 8/31/2010

Field Sample #: MW-27 | Sampled: 8/30/2010 17:00

Sample ID: 10I0004-03

Sample Matrix: Product/Solid

Sample Flags: RL-05

Volatile Organic Compounds by GC/MS

Analyte	Results	RL	Units	Dilution	Flag	Method	Date Prepared	Date/Time Analyzed	Analyst
Hexachlorobutadiene	ND	22	mg/Kg wet	100		SW-846 8260B	9/3/10	9/3/10 16:57	LBD
2-Hexanone (MBK)	ND	900	mg/Kg wet	100	V-05	SW-846 8260B	9/3/10	9/3/10 16:57	LBD
Isopropylbenzene (Cumene)	ND	22	mg/Kg wet	100		SW-846 8260B	9/3/10	9/3/10 16:57	LBD
p-Isopropyltoluene (p-Cymene)	ND	22	mg/Kg wet	100		SW-846 8260B	9/3/10	9/3/10 16:57	LBD
Methyl tert-Butyl Ether (MTBE)	ND	90	mg/Kg wet	100		SW-846 8260B	9/3/10	9/3/10 16:57	LBD
Methylene Chloride	ND	110	mg/Kg wet	100		SW-846 8260B	9/3/10	9/3/10 16:57	LBD
4-Methyl-2-pentanone (MIBK)	ND	450	mg/Kg wet	100	V-05	SW-846 8260B	9/3/10	9/3/10 16:57	LBD
Naphthalene	ND	220	mg/Kg wet	100	V-05	SW-846 8260B	9/3/10	9/3/10 16:57	LBD
n-Propylbenzene	ND	22	mg/Kg wet	100		SW-846 8260B	9/3/10	9/3/10 16:57	LBD
Styrene	480	22	mg/Kg wet	100		SW-846 8260B	9/3/10	9/3/10 16:57	LBD
1,1,1,2-Tetrachloroethane	ND	90	mg/Kg wet	100		SW-846 8260B	9/3/10	9/3/10 16:57	LBD
1,1,2,2-Tetrachloroethane	ND	45	mg/Kg wet	100		SW-846 8260B	9/3/10	9/3/10 16:57	LBD
Tetrachloroethylene	ND	22	mg/Kg wet	100		SW-846 8260B	9/3/10	9/3/10 16:57	LBD
Tetrahydrofuran	ND	220	mg/Kg wet	100	V-05	SW-846 8260B	9/3/10	9/3/10 16:57	LBD
Toluene	ND	22	mg/Kg wet	100		SW-846 8260B	9/3/10	9/3/10 16:57	LBD
1,2,3-Trichlorobenzene	230	110	mg/Kg wet	100	V-05	SW-846 8260B	9/3/10	9/3/10 16:57	LBD
1,2,4-Trichlorobenzene	1000	22	mg/Kg wet	100		SW-846 8260B	9/3/10	9/3/10 16:57	LBD
1,1,1-Trichloroethane	ND	45	mg/Kg wet	100		SW-846 8260B	9/3/10	9/3/10 16:57	LBD
1,1,2-Trichloroethane	ND	22	mg/Kg wet	100		SW-846 8260B	9/3/10	9/3/10 16:57	LBD
Trichloroethylene	220000	2200	mg/Kg wet	10000		SW-846 8260B	9/7/10	9/7/10 14:20	LBD
Trichlorofluoromethane (Freon 11)	ND	45	mg/Kg wet	100		SW-846 8260B	9/3/10	9/3/10 16:57	LBD
1,2,3-Trichloropropane	ND	45	mg/Kg wet	100	V-05	SW-846 8260B	9/3/10	9/3/10 16:57	LBD
1,2,4-Trimethylbenzene	ND	22	mg/Kg wet	100		SW-846 8260B	9/3/10	9/3/10 16:57	LBD
1,3,5-Trimethylbenzene	ND	22	mg/Kg wet	100		SW-846 8260B	9/3/10	9/3/10 16:57	LBD
Vinyl Chloride	ND	45	mg/Kg wet	100		SW-846 8260B	9/3/10	9/3/10 16:57	LBD
m+p Xylene	ND	45	mg/Kg wet	100		SW-846 8260B	9/3/10	9/3/10 16:57	LBD
o-Xylene	ND	22	mg/Kg wet	100		SW-846 8260B	9/3/10	9/3/10 16:57	LBD

Surrogates	% Recovery	Recovery Limits	Flag	
1,2-Dichloroethane-d4	*	70-130	S-21	9/3/10 16:57
1,2-Dichloroethane-d4	*	70-130	S-21	9/7/10 14:20
Toluene-d8	*	70-130	S-21	9/3/10 16:57
Toluene-d8	*	70-130	S-21	9/7/10 14:20
4-Bromofluorobenzene	*	70-130	S-21	9/3/10 16:57
4-Bromofluorobenzene	*	70-130	S-21	9/7/10 14:20

con-test® ANALYTICAL LABORATORY

39 Spruce Street * East Longmeadow, MA 01028 * FAX 413/525-6405 * TEL. 413/525-2332

Sample Extraction Data

Prep Method: % Solids-SM 2540G

Lab Number [Field ID]	Batch	Date
10I0004-01 [MW-27 (6-8)]	B018628	09/02/10
10I0004-02 [MW-28 (8-10)]	B018628	09/02/10

Prep Method: SW-846 5035-SW-846 8260B

Lab Number [Field ID]	Batch	Sample Amount(g)	Methanol Volume(mL)	Methanol Aliquot(mL)	Final Volume(mL)	Date
10I0004-03 [MW-27]	B018744	3.40	15.2	0.01	50	09/03/10

Prep Method: SW-846 5035-SW-846 8260B

Lab Number [Field ID]	Batch	Initial [g]	Final [mL]	Date
10I0004-01 [MW-27 (6-8)]	B018595	7.90	10.0	09/01/10

Prep Method: SW-846 5035-SW-846 8260B

Lab Number [Field ID]	Batch	Initial [g]	Final [mL]	Date
10I0004-02 [MW-28 (8-10)]	B018666	5.40	10.0	09/02/10

Prep Method: SW-846 5035-SW-846 8260B

Lab Number [Field ID]	Batch	Sample Amount(g)	Methanol Volume(mL)	Methanol Aliquot(mL)	Final Volume(mL)	Date
10I0004-01RE1 [MW-27 (6-8)]	B019237	20.6	17.7	0.01	50	09/07/10
10I0004-03RE1 [MW-27]	B019237	3.40	15.2	0.0001	50	09/07/10

Prep Method: SW-846 5035-SW-846 8260B

Lab Number [Field ID]	Batch	Sample Amount(g)	Methanol Volume(mL)	Methanol Aliquot(mL)	Final Volume(mL)	Date
10I0004-01 [MW-27 (6-8)]	B019471	20.6	17.7	1	50	09/03/10
10I0004-02 [MW-28 (8-10)]	B019471	14.0	16.6	0.1	50	09/03/10

con-test® ANALYTICAL LABORATORY

39 Spruce Street * East Longmeadow, MA 01028 * FAX 413/525-6405 * TEL. 413/525-2332

QUALITY CONTROL

Volatile Organic Compounds by GC/MS - Quality Control

Analyte	Result	Reporting Limit	Units	Spike Level	Source Result	%REC	%REC Limits	RPD	RPD Limit	Notes
Batch B018595 - SW-846 5035										
Blank (B018595-BLK1)				Prepared & Analyzed: 09/01/10						
Acetone	ND	0.10	mg/Kg wet							V-16
tert-Amyl Methyl Ether (TAME)	ND	0.0010	mg/Kg wet							
Benzene	ND	0.0020	mg/Kg wet							
Bromobenzene	ND	0.0020	mg/Kg wet							
Bromochloromethane	ND	0.0020	mg/Kg wet							
Bromodichloromethane	ND	0.0020	mg/Kg wet							
Bromoform	ND	0.0020	mg/Kg wet							
Bromomethane	ND	0.010	mg/Kg wet							
2-Butanone (MEK)	ND	0.040	mg/Kg wet							V-16
n-Butylbenzene	ND	0.0020	mg/Kg wet							
sec-Butylbenzene	ND	0.0020	mg/Kg wet							
tert-Butylbenzene	ND	0.0020	mg/Kg wet							
tert-Butyl Ethyl Ether (TBEE)	ND	0.0010	mg/Kg wet							
Carbon Disulfide	ND	0.0060	mg/Kg wet							
Carbon Tetrachloride	ND	0.0020	mg/Kg wet							
Chlorobenzene	ND	0.0020	mg/Kg wet							
Chlorodibromomethane	ND	0.0010	mg/Kg wet							
Chloroethane	ND	0.010	mg/Kg wet							
Chloroform	ND	0.0040	mg/Kg wet							
Chloromethane	ND	0.010	mg/Kg wet							
2-Chlorotoluene	ND	0.0020	mg/Kg wet							
4-Chlorotoluene	ND	0.0020	mg/Kg wet							
1,2-Dibromo-3-chloropropane (DBCP)	ND	0.0040	mg/Kg wet							
1,2-Dibromoethane (EDB)	ND	0.0010	mg/Kg wet							
Dibromomethane	ND	0.0020	mg/Kg wet							
1,2-Dichlorobenzene	ND	0.0020	mg/Kg wet							
1,3-Dichlorobenzene	ND	0.0020	mg/Kg wet							
1,4-Dichlorobenzene	ND	0.0020	mg/Kg wet							
Dichlorodifluoromethane (Freon 12)	ND	0.010	mg/Kg wet							
1,1-Dichloroethane	ND	0.0020	mg/Kg wet							
1,2-Dichloroethane	ND	0.0020	mg/Kg wet							
1,1-Dichloroethylene	ND	0.0040	mg/Kg wet							
cis-1,2-Dichloroethylene	ND	0.0020	mg/Kg wet							
trans-1,2-Dichloroethylene	ND	0.0020	mg/Kg wet							
1,2-Dichloropropane	ND	0.0020	mg/Kg wet							
1,3-Dichloropropane	ND	0.0010	mg/Kg wet							
2,2-Dichloropropane	ND	0.0020	mg/Kg wet							
1,1-Dichloropropene	ND	0.0020	mg/Kg wet							
cis-1,3-Dichloropropene	ND	0.0010	mg/Kg wet							
trans-1,3-Dichloropropene	ND	0.0010	mg/Kg wet							
Diethyl Ether	ND	0.010	mg/Kg wet							
Diisopropyl Ether (DIPE)	ND	0.0010	mg/Kg wet							
1,4-Dioxane	ND	0.10	mg/Kg wet							V-16
Ethylbenzene	ND	0.0020	mg/Kg wet							
Hexachlorobutadiene	ND	0.0020	mg/Kg wet							
2-Hexanone (MBK)	ND	0.020	mg/Kg wet							
Isopropylbenzene (Cumene)	ND	0.0020	mg/Kg wet							
p-Isopropyltoluene (p-Cymene)	ND	0.0020	mg/Kg wet							
Methyl tert-Butyl Ether (MTBE)	ND	0.0040	mg/Kg wet							
Methylene Chloride	ND	0.010	mg/Kg wet							
4-Methyl-2-pentanone (MIBK)	ND	0.020	mg/Kg wet							
Naphthalene	ND	0.0040	mg/Kg wet							V-05

con-test® ANALYTICAL LABORATORY

39 Spruce Street * East Longmeadow, MA 01028 * FAX 413/525-6405 * TEL. 413/525-2332

QUALITY CONTROL

Volatile Organic Compounds by GC/MS - Quality Control

Analyte	Result	Reporting Limit	Units	Spike Level	Source Result	%REC	%REC Limits	RPD	RPD Limit	Notes	
Batch B018595 - SW-846 5035											
Blank (B018595-BLK1)				Prepared & Analyzed: 09/01/10							
n-Propylbenzene	ND	0.0020	mg/Kg wet								
Styrene	ND	0.0020	mg/Kg wet								
1,1,1,2-Tetrachloroethane	ND	0.0020	mg/Kg wet								
1,1,2,2-Tetrachloroethane	ND	0.0010	mg/Kg wet								
Tetrachloroethylene	ND	0.0020	mg/Kg wet								
Tetrahydrofuran	ND	0.010	mg/Kg wet							V-16	
Toluene	ND	0.0020	mg/Kg wet								
1,2,3-Trichlorobenzene	ND	0.0040	mg/Kg wet							V-05	
1,2,4-Trichlorobenzene	ND	0.0020	mg/Kg wet								
1,1,1-Trichloroethane	ND	0.0020	mg/Kg wet								
1,1,2-Trichloroethane	ND	0.0020	mg/Kg wet								
Trichloroethylene	ND	0.0020	mg/Kg wet								
Trichlorofluoromethane (Freon 11)	ND	0.010	mg/Kg wet								
1,2,3-Trichloropropane	ND	0.0020	mg/Kg wet								
1,2,4-Trimethylbenzene	ND	0.0020	mg/Kg wet								
1,3,5-Trimethylbenzene	ND	0.0020	mg/Kg wet								
Vinyl Chloride	ND	0.010	mg/Kg wet								
m+p Xylene	ND	0.0040	mg/Kg wet								
o-Xylene	ND	0.0020	mg/Kg wet								
Surrogate: 1,2-Dichloroethane-d4	*0.0515*		mg/Kg wet	0.0500		103	70-130				
Surrogate: Toluene-d8	*0.0492*		mg/Kg wet	0.0500		98.3	70-130				
Surrogate: 4-Bromofluorobenzene	*0.0493*		mg/Kg wet	0.0500		98.7	70-130				
LCS (B018595-BS1)				Prepared & Analyzed: 09/01/10							
Acetone	0.216	0.10	mg/Kg wet	0.200		108	40-160			V-16	†
tert-Amyl Methyl Ether (TAME)	0.0171	0.0010	mg/Kg wet	0.0200		85.7	70-130				
Benzene	0.0191	0.0020	mg/Kg wet	0.0200		95.6	70-130				
Bromobenzene	0.0180	0.0020	mg/Kg wet	0.0200		90.2	70-130				
Bromochloromethane	0.0199	0.0020	mg/Kg wet	0.0200		99.7	70-130				
Bromodichloromethane	0.0195	0.0020	mg/Kg wet	0.0200		97.5	70-130				
Bromoform	0.0208	0.0020	mg/Kg wet	0.0200		104	70-130				
Bromomethane	0.0125	0.010	mg/Kg wet	0.0200		62.3	40-160			L-14, V-06	†
2-Butanone (MEK)	0.170	0.040	mg/Kg wet	0.200		84.8	40-160			V-16	†
n-Butylbenzene	0.0218	0.0020	mg/Kg wet	0.0200		109	70-130				
sec-Butylbenzene	0.0210	0.0020	mg/Kg wet	0.0200		105	70-130				
tert-Butylbenzene	0.0207	0.0020	mg/Kg wet	0.0200		104	70-130				
tert-Butyl Ethyl Ether (TBEE)	0.0178	0.0010	mg/Kg wet	0.0200		89.1	70-130				
Carbon Disulfide	0.0201	0.0060	mg/Kg wet	0.0200		101	70-130				
Carbon Tetrachloride	0.0221	0.0020	mg/Kg wet	0.0200		110	70-130				
Chlorobenzene	0.0188	0.0020	mg/Kg wet	0.0200		94.2	70-130				
Chlorodibromomethane	0.0195	0.0010	mg/Kg wet	0.0200		97.6	70-130				
Chloroethane	0.0170	0.010	mg/Kg wet	0.0200		85.2	70-130				
Chloroform	0.0203	0.0040	mg/Kg wet	0.0200		102	70-130				
Chloromethane	0.0128	0.010	mg/Kg wet	0.0200		64.2	40-160			L-14	†
2-Chlorotoluene	0.0193	0.0020	mg/Kg wet	0.0200		96.7	70-130				
4-Chlorotoluene	0.0201	0.0020	mg/Kg wet	0.0200		100	70-130				
1,2-Dibromo-3-chloropropane (DBCP)	0.0172	0.0040	mg/Kg wet	0.0200		85.9	70-130				
1,2-Dibromoethane (EDB)	0.0179	0.0010	mg/Kg wet	0.0200		89.5	70-130				
Dibromomethane	0.0180	0.0020	mg/Kg wet	0.0200		90.2	70-130				
1,2-Dichlorobenzene	0.0181	0.0020	mg/Kg wet	0.0200		90.7	70-130				
1,3-Dichlorobenzene	0.0187	0.0020	mg/Kg wet	0.0200		93.6	70-130				
1,4-Dichlorobenzene	0.0180	0.0020	mg/Kg wet	0.0200		90.2	70-130				

con-test® ANALYTICAL LABORATORY

39 Spruce Street * East Longmeadow, MA 01028 * FAX 413/525-6405 * TEL. 413/525-2332

QUALITY CONTROL

Volatile Organic Compounds by GC/MS - Quality Control

Analyte	Result	Reporting Limit	Units	Spike Level	Source Result	%REC	%REC Limits	RPD	RPD Limit	Notes	
Batch B018595 - SW-846 5035											
LCS (B018595-BS1)				Prepared & Analyzed: 09/01/10							
Dichlorodifluoromethane (Freon 12)	0.00984	0.010	mg/Kg wet	0.0200		49.2	40-160			L-14	†
1,1-Dichloroethane	0.0199	0.0020	mg/Kg wet	0.0200		99.4	70-130				
1,2-Dichloroethane	0.0198	0.0020	mg/Kg wet	0.0200		99.2	70-130				
1,1-Dichloroethylene	0.0207	0.0040	mg/Kg wet	0.0200		104	70-130				
cis-1,2-Dichloroethylene	0.0198	0.0020	mg/Kg wet	0.0200		98.9	70-130				
trans-1,2-Dichloroethylene	0.0201	0.0020	mg/Kg wet	0.0200		100	70-130				
1,2-Dichloropropane	0.0184	0.0020	mg/Kg wet	0.0200		92.1	70-130				
1,3-Dichloropropane	0.0171	0.0010	mg/Kg wet	0.0200		85.4	70-130				
2,2-Dichloropropane	0.0222	0.0020	mg/Kg wet	0.0200		111	70-130				
1,1-Dichloropropene	0.0207	0.0020	mg/Kg wet	0.0200		104	70-130				
cis-1,3-Dichloropropene	0.0189	0.0010	mg/Kg wet	0.0200		94.3	70-130				
trans-1,3-Dichloropropene	0.0229	0.0010	mg/Kg wet	0.0200		115	70-130				
Diethyl Ether	0.0182	0.010	mg/Kg wet	0.0200		91.2	70-130				
Diisopropyl Ether (DIPE)	0.0182	0.0010	mg/Kg wet	0.0200		90.9	70-130				
1,4-Dioxane	0.160	0.10	mg/Kg wet	0.200		80.2	40-160			V-16	†
Ethylbenzene	0.0202	0.0020	mg/Kg wet	0.0200		101	70-130				
Hexachlorobutadiene	0.0212	0.0020	mg/Kg wet	0.0200		106	70-130				
2-Hexanone (MBK)	0.154	0.020	mg/Kg wet	0.200		77.2	40-160				†
Isopropylbenzene (Cumene)	0.0241	0.0020	mg/Kg wet	0.0200		121	70-130				
p-Isopropyltoluene (p-Cymene)	0.0209	0.0020	mg/Kg wet	0.0200		104	70-130				
Methyl tert-Butyl Ether (MTBE)	0.0180	0.0040	mg/Kg wet	0.0200		89.9	70-130				
Methylene Chloride	0.0183	0.010	mg/Kg wet	0.0200		91.6	70-130				
4-Methyl-2-pentanone (MIBK)	0.149	0.020	mg/Kg wet	0.200		74.3	40-160				†
Naphthalene	0.0165	0.0040	mg/Kg wet	0.0200		82.6	70-130			V-05	
n-Propylbenzene	0.0205	0.0020	mg/Kg wet	0.0200		102	70-130				
Styrene	0.0198	0.0020	mg/Kg wet	0.0200		99.0	70-130				
1,1,1,2-Tetrachloroethane	0.0202	0.0020	mg/Kg wet	0.0200		101	70-130				
1,1,2,2-Tetrachloroethane	0.0163	0.0010	mg/Kg wet	0.0200		81.7	70-130				
Tetrachloroethylene	0.0212	0.0020	mg/Kg wet	0.0200		106	70-130				
Tetrahydrofuran	0.0168	0.010	mg/Kg wet	0.0200		84.0	70-130			V-16	
Toluene	0.0189	0.0020	mg/Kg wet	0.0200		94.6	70-130				
1,2,3-Trichlorobenzene	0.0173	0.0040	mg/Kg wet	0.0200		86.7	70-130			V-05	
1,2,4-Trichlorobenzene	0.0221	0.0020	mg/Kg wet	0.0200		110	70-130				
1,1,1-Trichloroethane	0.0221	0.0020	mg/Kg wet	0.0200		110	70-130				
1,1,2-Trichloroethane	0.0172	0.0020	mg/Kg wet	0.0200		85.8	70-130				
Trichloroethylene	0.0201	0.0020	mg/Kg wet	0.0200		100	70-130				
Trichlorofluoromethane (Freon 11)	0.0234	0.010	mg/Kg wet	0.0200		117	70-130				
1,2,3-Trichloropropane	0.0146	0.0020	mg/Kg wet	0.0200		72.9	70-130				
1,2,4-Trimethylbenzene	0.0203	0.0020	mg/Kg wet	0.0200		102	70-130				
1,3,5-Trimethylbenzene	0.0208	0.0020	mg/Kg wet	0.0200		104	70-130				
Vinyl Chloride	0.0172	0.010	mg/Kg wet	0.0200		86.2	70-130				
m+p Xylene	0.0406	0.0040	mg/Kg wet	0.0400		101	70-130				
o-Xylene	0.0195	0.0020	mg/Kg wet	0.0200		97.3	70-130				
Surrogate: 1,2-Dichloroethane-d4	*0.0509*		mg/Kg wet	0.0500		102	70-130				
Surrogate: Toluene-d8	*0.0497*		mg/Kg wet	0.0500		99.4	70-130				
Surrogate: 4-Bromofluorobenzene	*0.0509*		mg/Kg wet	0.0500		102	70-130				

con-test® ANALYTICAL LABORATORY

39 Spruce Street * East Longmeadow, MA 01028 * FAX 413/525-6405 * TEL. 413/525-2332

QUALITY CONTROL

Volatile Organic Compounds by GC/MS - Quality Control

Analyte	Result	Reporting Limit	Units	Spike Level	Source Result	%REC	%REC Limits	RPD	RPD Limit	Notes	
Batch B018595 - SW-846 5035											
LCS Dup (B018595-BSD1)				Prepared & Analyzed: 09/01/10							
Acetone	0.208	0.10	mg/Kg wet	0.200		104	40-160	3.97	20	V-16	†
tert-Amyl Methyl Ether (TAME)	0.0174	0.0010	mg/Kg wet	0.0200		87.0	70-130	1.51	20		
Benzene	0.0197	0.0020	mg/Kg wet	0.0200		98.3	70-130	2.78	20		
Bromobenzene	0.0189	0.0020	mg/Kg wet	0.0200		94.3	70-130	4.44	20		
Bromochloromethane	0.0208	0.0020	mg/Kg wet	0.0200		104	70-130	4.41	20		
Bromodichloromethane	0.0210	0.0020	mg/Kg wet	0.0200		105	70-130	7.50	20		
Bromoform	0.0212	0.0020	mg/Kg wet	0.0200		106	70-130	2.29	20		
Bromomethane	0.0122	0.010	mg/Kg wet	0.0200		60.8	40-160	2.44	20	L-14, V-06	†
2-Butanone (MEK)	0.169	0.040	mg/Kg wet	0.200		84.6	40-160	0.213	20	V-16	†
n-Butylbenzene	0.0217	0.0020	mg/Kg wet	0.0200		109	70-130	0.459	20		
sec-Butylbenzene	0.0211	0.0020	mg/Kg wet	0.0200		106	70-130	0.569	20		
tert-Butylbenzene	0.0207	0.0020	mg/Kg wet	0.0200		104	70-130	0.0966	20		
tert-Butyl Ethyl Ether (TBEE)	0.0181	0.0010	mg/Kg wet	0.0200		90.5	70-130	1.56	20		
Carbon Disulfide	0.0205	0.0060	mg/Kg wet	0.0200		102	70-130	1.67	20		
Carbon Tetrachloride	0.0225	0.0020	mg/Kg wet	0.0200		112	70-130	1.71	20		
Chlorobenzene	0.0195	0.0020	mg/Kg wet	0.0200		97.3	70-130	3.24	20		
Chlorodibromomethane	0.0205	0.0010	mg/Kg wet	0.0200		103	70-130	5.09	20		
Chloroethane	0.0170	0.010	mg/Kg wet	0.0200		85.1	70-130	0.117	20		
Chloroform	0.0209	0.0040	mg/Kg wet	0.0200		105	70-130	3.01	20		
Chloromethane	0.0131	0.010	mg/Kg wet	0.0200		65.6	40-160	2.16	20	L-14	†
2-Chlorotoluene	0.0200	0.0020	mg/Kg wet	0.0200		100	70-130	3.36	20		
4-Chlorotoluene	0.0206	0.0020	mg/Kg wet	0.0200		103	70-130	2.75	20		
1,2-Dibromo-3-chloropropane (DBCP)	0.0165	0.0040	mg/Kg wet	0.0200		82.3	70-130	4.28	20		
1,2-Dibromoethane (EDB)	0.0191	0.0010	mg/Kg wet	0.0200		95.4	70-130	6.38	20		
Dibromomethane	0.0191	0.0020	mg/Kg wet	0.0200		95.4	70-130	5.60	20		
1,2-Dichlorobenzene	0.0184	0.0020	mg/Kg wet	0.0200		92.1	70-130	1.53	20		
1,3-Dichlorobenzene	0.0189	0.0020	mg/Kg wet	0.0200		94.7	70-130	1.17	20		
1,4-Dichlorobenzene	0.0181	0.0020	mg/Kg wet	0.0200		90.7	70-130	0.553	20		
Dichlorodifluoromethane (Freon 12)	0.00942	0.010	mg/Kg wet	0.0200		47.1	40-160	4.36	20	L-14	†
1,1-Dichloroethane	0.0198	0.0020	mg/Kg wet	0.0200		98.8	70-130	0.605	20		
1,2-Dichloroethane	0.0205	0.0020	mg/Kg wet	0.0200		103	70-130	3.47	20		
1,1-Dichloroethylene	0.0210	0.0040	mg/Kg wet	0.0200		105	70-130	1.34	20		
cis-1,2-Dichloroethylene	0.0208	0.0020	mg/Kg wet	0.0200		104	70-130	5.22	20		
trans-1,2-Dichloroethylene	0.0202	0.0020	mg/Kg wet	0.0200		101	70-130	0.596	20		
1,2-Dichloropropane	0.0195	0.0020	mg/Kg wet	0.0200		97.7	70-130	5.90	20		
1,3-Dichloropropane	0.0185	0.0010	mg/Kg wet	0.0200		92.4	70-130	7.87	20		
2,2-Dichloropropane	0.0222	0.0020	mg/Kg wet	0.0200		111	70-130	0.180	20		
1,1-Dichloropropene	0.0213	0.0020	mg/Kg wet	0.0200		107	70-130	3.04	20		
cis-1,3-Dichloropropene	0.0199	0.0010	mg/Kg wet	0.0200		99.4	70-130	5.27	20		
trans-1,3-Dichloropropene	0.0244	0.0010	mg/Kg wet	0.0200		122	70-130	6.09	20		
Diethyl Ether	0.0181	0.010	mg/Kg wet	0.0200		90.3	70-130	0.992	20		
Diisopropyl Ether (DIPE)	0.0183	0.0010	mg/Kg wet	0.0200		91.3	70-130	0.439	20		
1,4-Dioxane	0.161	0.10	mg/Kg wet	0.200		80.7	40-160	0.684	20	V-16	†
Ethylbenzene	0.0203	0.0020	mg/Kg wet	0.0200		102	70-130	0.889	20		
Hexachlorobutadiene	0.0217	0.0020	mg/Kg wet	0.0200		108	70-130	2.14	20		
2-Hexanone (MBK)	0.163	0.020	mg/Kg wet	0.200		81.5	40-160	5.39	20		†
Isopropylbenzene (Cumene)	0.0245	0.0020	mg/Kg wet	0.0200		122	70-130	1.48	20		
p-Isopropyltoluene (p-Cymene)	0.0210	0.0020	mg/Kg wet	0.0200		105	70-130	0.382	20		
Methyl tert-Butyl Ether (MTBE)	0.0185	0.0040	mg/Kg wet	0.0200		92.6	70-130	2.96	20		
Methylene Chloride	0.0189	0.010	mg/Kg wet	0.0200		94.5	70-130	3.12	20		
4-Methyl-2-pentanone (MIBK)	0.159	0.020	mg/Kg wet	0.200		79.7	40-160	6.91	20		†
Naphthalene	0.0161	0.0040	mg/Kg wet	0.0200		80.5	70-130	2.58	20	V-05	

con-test® ANALYTICAL LABORATORY

39 Spruce Street * East Longmeadow, MA 01028 * FAX 413/525-6405 * TEL. 413/525-2332

QUALITY CONTROL

Volatile Organic Compounds by GC/MS - Quality Control

Analyte	Result	Reporting Limit	Units	Spike Level	Source Result	%REC	%REC Limits	RPD	RPD Limit	Notes
Batch B018595 - SW-846 5035										
LCS Dup (B018595-BSD1)				Prepared & Analyzed: 09/01/10						
n-Propylbenzene	0.0209	0.0020	mg/Kg wet	0.0200		104	70-130	2.03	20	
Styrene	0.0203	0.0020	mg/Kg wet	0.0200		101	70-130	2.40	20	
1,1,1,2-Tetrachloroethane	0.0206	0.0020	mg/Kg wet	0.0200		103	70-130	2.06	20	
1,1,2,2-Tetrachloroethane	0.0175	0.0010	mg/Kg wet	0.0200		87.7	70-130	7.08	20	
Tetrachloroethylene	0.0221	0.0020	mg/Kg wet	0.0200		111	70-130	4.15	20	
Tetrahydrofuran	0.0186	0.010	mg/Kg wet	0.0200		93.0	70-130	10.2	20	V-16
Toluene	0.0197	0.0020	mg/Kg wet	0.0200		98.4	70-130	3.94	20	
1,2,3-Trichlorobenzene	0.0171	0.0040	mg/Kg wet	0.0200		85.6	70-130	1.28	20	V-05
1,2,4-Trichlorobenzene	0.0212	0.0020	mg/Kg wet	0.0200		106	70-130	3.98	20	
1,1,1-Trichloroethane	0.0227	0.0020	mg/Kg wet	0.0200		114	70-130	2.95	20	
1,1,2-Trichloroethane	0.0188	0.0020	mg/Kg wet	0.0200		93.9	70-130	9.02	20	
Trichloroethylene	0.0211	0.0020	mg/Kg wet	0.0200		105	70-130	4.86	20	
Trichlorofluoromethane (Freon 11)	0.0239	0.010	mg/Kg wet	0.0200		119	70-130	1.78	20	
1,2,3-Trichloropropane	0.0161	0.0020	mg/Kg wet	0.0200		80.5	70-130	9.91	20	
1,2,4-Trimethylbenzene	0.0203	0.0020	mg/Kg wet	0.0200		102	70-130	0.197	20	
1,3,5-Trimethylbenzene	0.0216	0.0020	mg/Kg wet	0.0200		108	70-130	3.78	20	
Vinyl Chloride	0.0174	0.010	mg/Kg wet	0.0200		87.2	70-130	1.15	20	
m+p Xylene	0.0410	0.0040	mg/Kg wet	0.0400		102	70-130	0.981	20	
o-Xylene	0.0200	0.0020	mg/Kg wet	0.0200		100	70-130	2.94	20	
Surrogate: 1,2-Dichloroethane-d4	*0.0511*		mg/Kg wet	0.0500		102	70-130			
Surrogate: Toluene-d8	*0.0507*		mg/Kg wet	0.0500		101	70-130			
Surrogate: 4-Bromofluorobenzene	*0.0506*		mg/Kg wet	0.0500		101	70-130			
Batch B018666 - SW-846 5035										
Blank (B018666-BLK1)				Prepared & Analyzed: 09/02/10						
Acetone	ND	0.10	mg/Kg wet							V-16
tert-Amyl Methyl Ether (TAME)	ND	0.0010	mg/Kg wet							
Benzene	ND	0.0020	mg/Kg wet							
Bromobenzene	ND	0.0020	mg/Kg wet							
Bromochloromethane	ND	0.0020	mg/Kg wet							
Bromodichloromethane	ND	0.0020	mg/Kg wet							
Bromoform	ND	0.0020	mg/Kg wet							
Bromomethane	ND	0.010	mg/Kg wet							
2-Butanone (MEK)	ND	0.040	mg/Kg wet							V-16
n-Butylbenzene	ND	0.0020	mg/Kg wet							
sec-Butylbenzene	ND	0.0020	mg/Kg wet							
tert-Butylbenzene	ND	0.0020	mg/Kg wet							
tert-Butyl Ethyl Ether (TBEE)	ND	0.0010	mg/Kg wet							
Carbon Disulfide	ND	0.0060	mg/Kg wet							
Carbon Tetrachloride	ND	0.0020	mg/Kg wet							
Chlorobenzene	ND	0.0020	mg/Kg wet							
Chlorodibromomethane	ND	0.0010	mg/Kg wet							
Chloroethane	ND	0.010	mg/Kg wet							
Chloroform	ND	0.0040	mg/Kg wet							
Chloromethane	ND	0.010	mg/Kg wet							
2-Chlorotoluene	ND	0.0020	mg/Kg wet							
4-Chlorotoluene	ND	0.0020	mg/Kg wet							
1,2-Dibromo-3-chloropropane (DBCP)	ND	0.0040	mg/Kg wet							
1,2-Dibromoethane (EDB)	ND	0.0010	mg/Kg wet							
Dibromomethane	ND	0.0020	mg/Kg wet							
1,2-Dichlorobenzene	ND	0.0020	mg/Kg wet							
1,3-Dichlorobenzene	ND	0.0020	mg/Kg wet							

con-test® ANALYTICAL LABORATORY

39 Spruce Street * East Longmeadow, MA 01028 * FAX 413/525-6405 * TEL. 413/525-2332

QUALITY CONTROL

Volatile Organic Compounds by GC/MS - Quality Control

Analyte	Result	Reporting Limit	Units	Spike Level	Source Result	%REC	%REC Limits	RPD	RPD Limit	Notes
Batch B018666 - SW-846 5035										
Blank (B018666-BLK1)				Prepared & Analyzed: 09/02/10						
1,4-Dichlorobenzene	ND	0.0020	mg/Kg wet							
Dichlorodifluoromethane (Freon 12)	ND	0.010	mg/Kg wet							
1,1-Dichloroethane	ND	0.0020	mg/Kg wet							
1,2-Dichloroethane	ND	0.0020	mg/Kg wet							
1,1-Dichloroethylene	ND	0.0040	mg/Kg wet							
cis-1,2-Dichloroethylene	ND	0.0020	mg/Kg wet							
trans-1,2-Dichloroethylene	ND	0.0020	mg/Kg wet							
1,2-Dichloropropane	ND	0.0020	mg/Kg wet							
1,3-Dichloropropane	ND	0.0010	mg/Kg wet							
2,2-Dichloropropane	ND	0.0020	mg/Kg wet							
1,1-Dichloropropene	ND	0.0020	mg/Kg wet							
cis-1,3-Dichloropropene	ND	0.0010	mg/Kg wet							
trans-1,3-Dichloropropene	ND	0.0010	mg/Kg wet							
Diethyl Ether	ND	0.010	mg/Kg wet							
Diisopropyl Ether (DIPE)	ND	0.0010	mg/Kg wet							
1,4-Dioxane	ND	0.10	mg/Kg wet							V-16
Ethylbenzene	ND	0.0020	mg/Kg wet							
Hexachlorobutadiene	ND	0.0020	mg/Kg wet							
2-Hexanone (MBK)	ND	0.020	mg/Kg wet							
Isopropylbenzene (Cumene)	ND	0.0020	mg/Kg wet							
p-Isopropyltoluene (p-Cymene)	ND	0.0020	mg/Kg wet							
Methyl tert-Butyl Ether (MTBE)	ND	0.0040	mg/Kg wet							
Methylene Chloride	ND	0.010	mg/Kg wet							
4-Methyl-2-pentanone (MIBK)	ND	0.020	mg/Kg wet							
Naphthalene	ND	0.0040	mg/Kg wet							
n-Propylbenzene	ND	0.0020	mg/Kg wet							
Styrene	ND	0.0020	mg/Kg wet							
1,1,1,2-Tetrachloroethane	ND	0.0020	mg/Kg wet							
1,1,2,2-Tetrachloroethane	ND	0.0010	mg/Kg wet							
Tetrachloroethylene	ND	0.0020	mg/Kg wet							
Tetrahydrofuran	ND	0.010	mg/Kg wet							R-05, V-16
Toluene	ND	0.0020	mg/Kg wet							
1,2,3-Trichlorobenzene	ND	0.0040	mg/Kg wet							
1,2,4-Trichlorobenzene	ND	0.0020	mg/Kg wet							
1,1,1-Trichloroethane	ND	0.0020	mg/Kg wet							
1,1,2-Trichloroethane	ND	0.0020	mg/Kg wet							
Trichloroethylene	ND	0.0020	mg/Kg wet							
Trichlorofluoromethane (Freon 11)	ND	0.010	mg/Kg wet							
1,2,3-Trichloropropane	ND	0.0020	mg/Kg wet							
1,2,4-Trimethylbenzene	ND	0.0020	mg/Kg wet							
1,3,5-Trimethylbenzene	ND	0.0020	mg/Kg wet							
Vinyl Chloride	ND	0.010	mg/Kg wet							
m+p Xylene	ND	0.0040	mg/Kg wet							
o-Xylene	ND	0.0020	mg/Kg wet							
Surrogate: 1,2-Dichloroethane-d4	*0.0560*		mg/Kg wet	0.0500		112	70-130			
Surrogate: Toluene-d8	*0.0480*		mg/Kg wet	0.0500		96.0	70-130			
Surrogate: 4-Bromofluorobenzene	*0.0484*		mg/Kg wet	0.0500		96.8	70-130			

con-test® ANALYTICAL LABORATORY

39 Spruce Street * East Longmeadow, MA 01028 * FAX 413/525-6405 * TEL. 413/525-2332

QUALITY CONTROL

Volatile Organic Compounds by GC/MS - Quality Control

Analyte	Result	Reporting Limit	Units	Spike Level	Source Result	%REC	%REC Limits	RPD	RPD Limit	Notes	
Batch B018666 - SW-846 5035											
LCS (B018666-BS1)				Prepared & Analyzed: 09/02/10							
Acetone	0.220	0.10	mg/Kg wet	0.200		110	40-160			V-16	†
tert-Amyl Methyl Ether (TAME)	0.0188	0.0010	mg/Kg wet	0.0200		94.1	70-130				
Benzene	0.0188	0.0020	mg/Kg wet	0.0200		93.8	70-130				
Bromobenzene	0.0194	0.0020	mg/Kg wet	0.0200		97.1	70-130				
Bromochloromethane	0.0208	0.0020	mg/Kg wet	0.0200		104	70-130				
Bromodichloromethane	0.0207	0.0020	mg/Kg wet	0.0200		104	70-130				
Bromoform	0.0240	0.0020	mg/Kg wet	0.0200		120	70-130				
Bromomethane	0.0104	0.010	mg/Kg wet	0.0200		52.1	40-160			L-14, V-06	†
2-Butanone (MEK)	0.185	0.040	mg/Kg wet	0.200		92.7	40-160			V-16	†
n-Butylbenzene	0.0209	0.0020	mg/Kg wet	0.0200		104	70-130				
sec-Butylbenzene	0.0203	0.0020	mg/Kg wet	0.0200		101	70-130				
tert-Butylbenzene	0.0196	0.0020	mg/Kg wet	0.0200		98.2	70-130				
tert-Butyl Ethyl Ether (TBEE)	0.0191	0.0010	mg/Kg wet	0.0200		95.5	70-130				
Carbon Disulfide	0.0195	0.0060	mg/Kg wet	0.0200		97.3	70-130				
Carbon Tetrachloride	0.0219	0.0020	mg/Kg wet	0.0200		109	70-130				
Chlorobenzene	0.0197	0.0020	mg/Kg wet	0.0200		98.5	70-130				
Chlorodibromomethane	0.0214	0.0010	mg/Kg wet	0.0200		107	70-130				
Chloroethane	0.0156	0.010	mg/Kg wet	0.0200		78.2	70-130				
Chloroform	0.0206	0.0040	mg/Kg wet	0.0200		103	70-130				
Chloromethane	0.0116	0.010	mg/Kg wet	0.0200		58.1	40-160			L-14, V-06	†
2-Chlorotoluene	0.0202	0.0020	mg/Kg wet	0.0200		101	70-130				
4-Chlorotoluene	0.0211	0.0020	mg/Kg wet	0.0200		106	70-130				
1,2-Dibromo-3-chloropropane (DBCP)	0.0193	0.0040	mg/Kg wet	0.0200		96.3	70-130				
1,2-Dibromoethane (EDB)	0.0198	0.0010	mg/Kg wet	0.0200		98.9	70-130				
Dibromomethane	0.0205	0.0020	mg/Kg wet	0.0200		102	70-130				
1,2-Dichlorobenzene	0.0186	0.0020	mg/Kg wet	0.0200		93.2	70-130				
1,3-Dichlorobenzene	0.0189	0.0020	mg/Kg wet	0.0200		94.5	70-130				
1,4-Dichlorobenzene	0.0182	0.0020	mg/Kg wet	0.0200		91.1	70-130				
Dichlorodifluoromethane (Freon 12)	0.00840	0.010	mg/Kg wet	0.0200		42.0	40-160			L-14	†
1,1-Dichloroethane	0.0192	0.0020	mg/Kg wet	0.0200		95.8	70-130				
1,2-Dichloroethane	0.0213	0.0020	mg/Kg wet	0.0200		107	70-130				
1,1-Dichloroethylene	0.0199	0.0040	mg/Kg wet	0.0200		99.4	70-130				
cis-1,2-Dichloroethylene	0.0195	0.0020	mg/Kg wet	0.0200		97.4	70-130				
trans-1,2-Dichloroethylene	0.0193	0.0020	mg/Kg wet	0.0200		96.7	70-130				
1,2-Dichloropropane	0.0187	0.0020	mg/Kg wet	0.0200		93.4	70-130				
1,3-Dichloropropane	0.0187	0.0010	mg/Kg wet	0.0200		93.5	70-130				
2,2-Dichloropropane	0.0214	0.0020	mg/Kg wet	0.0200		107	70-130				
1,1-Dichloropropene	0.0205	0.0020	mg/Kg wet	0.0200		102	70-130				
cis-1,3-Dichloropropene	0.0192	0.0010	mg/Kg wet	0.0200		95.8	70-130				
trans-1,3-Dichloropropene	0.0241	0.0010	mg/Kg wet	0.0200		120	70-130				
Diethyl Ether	0.0186	0.010	mg/Kg wet	0.0200		93.0	70-130				
Diisopropyl Ether (DIPE)	0.0187	0.0010	mg/Kg wet	0.0200		93.6	70-130				
1,4-Dioxane	0.181	0.10	mg/Kg wet	0.200		90.3	40-160			V-16	†
Ethylbenzene	0.0203	0.0020	mg/Kg wet	0.0200		101	70-130				
Hexachlorobutadiene	0.0206	0.0020	mg/Kg wet	0.0200		103	70-130				
2-Hexanone (MBK)	0.184	0.020	mg/Kg wet	0.200		91.9	40-160				†
Isopropylbenzene (Cumene)	0.0246	0.0020	mg/Kg wet	0.0200		123	70-130				
p-Isopropyltoluene (p-Cymene)	0.0206	0.0020	mg/Kg wet	0.0200		103	70-130				
Methyl tert-Butyl Ether (MTBE)	0.0201	0.0040	mg/Kg wet	0.0200		100	70-130				
Methylene Chloride	0.0187	0.010	mg/Kg wet	0.0200		93.6	70-130				
4-Methyl-2-pentanone (MIBK)	0.179	0.020	mg/Kg wet	0.200		89.5	40-160				†
Naphthalene	0.0173	0.0040	mg/Kg wet	0.0200		86.5	70-130				

con-test® ANALYTICAL LABORATORY

39 Spruce Street * East Longmeadow, MA 01028 * FAX 413/525-6405 * TEL. 413/525-2332

QUALITY CONTROL

Volatile Organic Compounds by GC/MS - Quality Control

Analyte	Result	Reporting Limit	Units	Spike Level	Source Result	%REC	%REC Limits	RPD	RPD Limit	Notes	
Batch B018666 - SW-846 5035											
LCS (B018666-BS1)				Prepared & Analyzed: 09/02/10							
n-Propylbenzene	0.0211	0.0020	mg/Kg wet	0.0200		106	70-130				
Styrene	0.0204	0.0020	mg/Kg wet	0.0200		102	70-130				
1,1,1,2-Tetrachloroethane	0.0217	0.0020	mg/Kg wet	0.0200		108	70-130				
1,1,2,2-Tetrachloroethane	0.0198	0.0010	mg/Kg wet	0.0200		98.9	70-130				
Tetrachloroethylene	0.0212	0.0020	mg/Kg wet	0.0200		106	70-130				
Tetrahydrofuran	0.0188	0.010	mg/Kg wet	0.0200		94.1	70-130			R-05, V-16	
Toluene	0.0186	0.0020	mg/Kg wet	0.0200		93.2	70-130				
1,2,3-Trichlorobenzene	0.0182	0.0040	mg/Kg wet	0.0200		91.2	70-130				
1,2,4-Trichlorobenzene	0.0225	0.0020	mg/Kg wet	0.0200		112	70-130				
1,1,1-Trichloroethane	0.0223	0.0020	mg/Kg wet	0.0200		112	70-130				
1,1,2-Trichloroethane	0.0193	0.0020	mg/Kg wet	0.0200		96.6	70-130				
Trichloroethylene	0.0199	0.0020	mg/Kg wet	0.0200		99.5	70-130				
Trichlorofluoromethane (Freon 11)	0.0220	0.010	mg/Kg wet	0.0200		110	70-130				
1,2,3-Trichloropropane	0.0187	0.0020	mg/Kg wet	0.0200		93.3	70-130				
1,2,4-Trimethylbenzene	0.0196	0.0020	mg/Kg wet	0.0200		97.8	70-130				
1,3,5-Trimethylbenzene	0.0216	0.0020	mg/Kg wet	0.0200		108	70-130				
Vinyl Chloride	0.0155	0.010	mg/Kg wet	0.0200		77.7	70-130				
m+p Xylene	0.0404	0.0040	mg/Kg wet	0.0400		101	70-130				
o-Xylene	0.0203	0.0020	mg/Kg wet	0.0200		102	70-130				
Surrogate: 1,2-Dichloroethane-d4	*0.0551*		mg/Kg wet	0.0500		110	70-130				
Surrogate: Toluene-d8	*0.0485*		mg/Kg wet	0.0500		97.0	70-130				
Surrogate: 4-Bromofluorobenzene	*0.0509*		mg/Kg wet	0.0500		102	70-130				
LCS Dup (B018666-BSD1)				Prepared & Analyzed: 09/02/10							
Acetone	0.220	0.10	mg/Kg wet	0.200		110	40-160	0.136	20	V-16	†
tert-Amyl Methyl Ether (TAME)	0.0194	0.0010	mg/Kg wet	0.0200		97.1	70-130	3.14	20		
Benzene	0.0191	0.0020	mg/Kg wet	0.0200		95.6	70-130	1.90	20		
Bromobenzene	0.0194	0.0020	mg/Kg wet	0.0200		97.0	70-130	0.103	20		
Bromochloromethane	0.0215	0.0020	mg/Kg wet	0.0200		107	70-130	3.12	20		
Bromodichloromethane	0.0214	0.0020	mg/Kg wet	0.0200		107	70-130	3.14	20		
Bromoform	0.0245	0.0020	mg/Kg wet	0.0200		122	70-130	2.06	20		
Bromomethane	0.0123	0.010	mg/Kg wet	0.0200		61.5	40-160	16.5	20	L-14, V-06	†
2-Butanone (MEK)	0.194	0.040	mg/Kg wet	0.200		97.0	40-160	4.55	20	V-16	†
n-Butylbenzene	0.0214	0.0020	mg/Kg wet	0.0200		107	70-130	2.46	20		
sec-Butylbenzene	0.0207	0.0020	mg/Kg wet	0.0200		104	70-130	2.24	20		
tert-Butylbenzene	0.0205	0.0020	mg/Kg wet	0.0200		102	70-130	4.09	20		
tert-Butyl Ethyl Ether (TBEE)	0.0197	0.0010	mg/Kg wet	0.0200		98.5	70-130	3.09	20		
Carbon Disulfide	0.0193	0.0060	mg/Kg wet	0.0200		96.3	70-130	1.03	20		
Carbon Tetrachloride	0.0219	0.0020	mg/Kg wet	0.0200		110	70-130	0.365	20		
Chlorobenzene	0.0196	0.0020	mg/Kg wet	0.0200		98.2	70-130	0.305	20		
Chlorodibromomethane	0.0221	0.0010	mg/Kg wet	0.0200		111	70-130	3.40	20		
Chloroethane	0.0158	0.010	mg/Kg wet	0.0200		79.0	70-130	1.02	20		
Chloroform	0.0215	0.0040	mg/Kg wet	0.0200		107	70-130	3.99	20		
Chloromethane	0.0119	0.010	mg/Kg wet	0.0200		59.3	40-160	2.04	20	L-14, V-06	†
2-Chlorotoluene	0.0200	0.0020	mg/Kg wet	0.0200		99.8	70-130	0.997	20		
4-Chlorotoluene	0.0211	0.0020	mg/Kg wet	0.0200		106	70-130	0.00	20		
1,2-Dibromo-3-chloropropane (DBCP)	0.0196	0.0040	mg/Kg wet	0.0200		98.1	70-130	1.85	20		
1,2-Dibromoethane (EDB)	0.0208	0.0010	mg/Kg wet	0.0200		104	70-130	4.93	20		
Dibromomethane	0.0203	0.0020	mg/Kg wet	0.0200		101	70-130	0.982	20		
1,2-Dichlorobenzene	0.0194	0.0020	mg/Kg wet	0.0200		97.2	70-130	4.20	20		
1,3-Dichlorobenzene	0.0191	0.0020	mg/Kg wet	0.0200		95.7	70-130	1.26	20		
1,4-Dichlorobenzene	0.0189	0.0020	mg/Kg wet	0.0200		94.3	70-130	3.45	20		

con-test® ANALYTICAL LABORATORY

39 Spruce Street * East Longmeadow, MA 01028 * FAX 413/525-6405 * TEL. 413/525-2332

QUALITY CONTROL

Volatile Organic Compounds by GC/MS - Quality Control

Analyte	Result	Reporting Limit	Units	Spike Level	Source Result	%REC	%REC Limits	RPD		RPD Limit	Notes	
Batch B018666 - SW-846 5035												
LCS Dup (B018666-BSD1)				Prepared & Analyzed: 09/02/10								
Dichlorodifluoromethane (Freon 12)	0.00826	0.010	mg/Kg wet	0.0200		41.3	40-160	1.68		20	L-14	†
1,1-Dichloroethane	0.0198	0.0020	mg/Kg wet	0.0200		99.1	70-130	3.39		20		
1,2-Dichloroethane	0.0222	0.0020	mg/Kg wet	0.0200		111	70-130	3.86		20		
1,1-Dichloroethylene	0.0205	0.0040	mg/Kg wet	0.0200		102	70-130	3.07		20		
cis-1,2-Dichloroethylene	0.0202	0.0020	mg/Kg wet	0.0200		101	70-130	3.73		20		
trans-1,2-Dichloroethylene	0.0197	0.0020	mg/Kg wet	0.0200		98.4	70-130	1.74		20		
1,2-Dichloropropane	0.0191	0.0020	mg/Kg wet	0.0200		95.5	70-130	2.22		20		
1,3-Dichloropropane	0.0192	0.0010	mg/Kg wet	0.0200		95.9	70-130	2.53		20		
2,2-Dichloropropane	0.0217	0.0020	mg/Kg wet	0.0200		108	70-130	1.21		20		
1,1-Dichloropropene	0.0206	0.0020	mg/Kg wet	0.0200		103	70-130	0.389		20		
cis-1,3-Dichloropropene	0.0205	0.0010	mg/Kg wet	0.0200		103	70-130	6.85		20		
trans-1,3-Dichloropropene	0.0253	0.0010	mg/Kg wet	0.0200		126	70-130	4.95		20		
Diethyl Ether	0.0195	0.010	mg/Kg wet	0.0200		97.7	70-130	4.93		20		
Diisopropyl Ether (DIPE)	0.0194	0.0010	mg/Kg wet	0.0200		96.8	70-130	3.36		20		
1,4-Dioxane	0.186	0.10	mg/Kg wet	0.200		92.8	40-160	2.77		20	V-16	†
Ethylbenzene	0.0203	0.0020	mg/Kg wet	0.0200		102	70-130	0.295		20		
Hexachlorobutadiene	0.0210	0.0020	mg/Kg wet	0.0200		105	70-130	1.73		20		
2-Hexanone (MBK)	0.191	0.020	mg/Kg wet	0.200		95.6	40-160	3.87		20		†
Isopropylbenzene (Cumene)	0.0241	0.0020	mg/Kg wet	0.0200		120	70-130	1.97		20		
p-Isopropyltoluene (p-Cymene)	0.0206	0.0020	mg/Kg wet	0.0200		103	70-130	0.194		20		
Methyl tert-Butyl Ether (MTBE)	0.0209	0.0040	mg/Kg wet	0.0200		104	70-130	3.71		20		
Methylene Chloride	0.0190	0.010	mg/Kg wet	0.0200		95.2	70-130	1.69		20		
4-Methyl-2-pentanone (MIBK)	0.187	0.020	mg/Kg wet	0.200		93.7	40-160	4.59		20		†
Naphthalene	0.0186	0.0040	mg/Kg wet	0.0200		92.8	70-130	7.03		20		
n-Propylbenzene	0.0209	0.0020	mg/Kg wet	0.0200		104	70-130	1.24		20		
Styrene	0.0207	0.0020	mg/Kg wet	0.0200		103	70-130	1.36		20		
1,1,1,2-Tetrachloroethane	0.0224	0.0020	mg/Kg wet	0.0200		112	70-130	3.17		20		
1,1,2,2-Tetrachloroethane	0.0205	0.0010	mg/Kg wet	0.0200		103	70-130	3.67		20		
Tetrachloroethylene	0.0212	0.0020	mg/Kg wet	0.0200		106	70-130	0.283		20		
Tetrahydrofuran	0.0150	0.010	mg/Kg wet	0.0200		74.9	70-130	**22.7**	*	20	R-05, V-16	
Toluene	0.0191	0.0020	mg/Kg wet	0.0200		95.6	70-130	2.54		20		
1,2,3-Trichlorobenzene	0.0187	0.0040	mg/Kg wet	0.0200		93.5	70-130	2.49		20		
1,2,4-Trichlorobenzene	0.0233	0.0020	mg/Kg wet	0.0200		116	70-130	3.32		20		
1,1,1-Trichloroethane	0.0223	0.0020	mg/Kg wet	0.0200		111	70-130	0.179		20		
1,1,2-Trichloroethane	0.0198	0.0020	mg/Kg wet	0.0200		99.1	70-130	2.55		20		
Trichloroethylene	0.0205	0.0020	mg/Kg wet	0.0200		102	70-130	2.97		20		
Trichlorofluoromethane (Freon 11)	0.0227	0.010	mg/Kg wet	0.0200		114	70-130	3.22		20		
1,2,3-Trichloropropane	0.0183	0.0020	mg/Kg wet	0.0200		91.7	70-130	1.73		20		
1,2,4-Trimethylbenzene	0.0205	0.0020	mg/Kg wet	0.0200		102	70-130	4.50		20		
1,3,5-Trimethylbenzene	0.0214	0.0020	mg/Kg wet	0.0200		107	70-130	1.12		20		
Vinyl Chloride	0.0160	0.010	mg/Kg wet	0.0200		80.1	70-130	3.04		20		
m+p Xylene	0.0408	0.0040	mg/Kg wet	0.0400		102	70-130	1.08		20		
o-Xylene	0.0198	0.0020	mg/Kg wet	0.0200		99.1	70-130	2.39		20		
Surrogate: 1,2-Dichloroethane-d4	*0.0558*		mg/Kg wet	0.0500		112	70-130					
Surrogate: Toluene-d8	*0.0491*		mg/Kg wet	0.0500		98.2	70-130					
Surrogate: 4-Bromofluorobenzene	*0.0503*		mg/Kg wet	0.0500		101	70-130					

con-test® ANALYTICAL LABORATORY

39 Spruce Street * East Longmeadow, MA 01028 * FAX 413/525-6405 * TEL. 413/525-2332

QUALITY CONTROL

Volatile Organic Compounds by GC/MS - Quality Control

Analyte	Result	Reporting Limit	Units	Spike Level	Source Result	%REC	%REC Limits	RPD	RPD Limit	Notes
Batch B018744 - SW-846 5035										
Blank (B018744-BLK1)				Prepared & Analyzed: 09/03/10						
Acetone	ND	2.5	mg/Kg wet							
tert-Amyl Methyl Ether (TAME)	ND	0.10	mg/Kg wet							
Benzene	ND	0.051	mg/Kg wet							
Bromobenzene	ND	0.051	mg/Kg wet							
Bromochloromethane	ND	0.051	mg/Kg wet							
Bromodichloromethane	ND	0.10	mg/Kg wet							
Bromoform	ND	0.51	mg/Kg wet							
Bromomethane	ND	0.10	mg/Kg wet							L-04
2-Butanone (MEK)	ND	1.0	mg/Kg wet							V-05
n-Butylbenzene	ND	0.051	mg/Kg wet							
sec-Butylbenzene	ND	0.051	mg/Kg wet							
tert-Butylbenzene	ND	0.051	mg/Kg wet							
tert-Butyl Ethyl Ether (TBEE)	ND	0.10	mg/Kg wet							
Carbon Disulfide	ND	0.51	mg/Kg wet							
Carbon Tetrachloride	ND	0.51	mg/Kg wet							
Chlorobenzene	ND	0.051	mg/Kg wet							
Chlorodibromomethane	ND	0.20	mg/Kg wet							
Chloroethane	ND	1.0	mg/Kg wet							L-04, R-05
Chloroform	ND	0.10	mg/Kg wet							
Chloromethane	ND	0.10	mg/Kg wet							
2-Chlorotoluene	ND	0.051	mg/Kg wet							
4-Chlorotoluene	ND	0.051	mg/Kg wet							
1,2-Dibromo-3-chloropropane (DBCP)	ND	0.51	mg/Kg wet							V-05
1,2-Dibromoethane (EDB)	ND	0.20	mg/Kg wet							
Dibromomethane	ND	0.051	mg/Kg wet							
1,2-Dichlorobenzene	ND	0.051	mg/Kg wet							
1,3-Dichlorobenzene	ND	0.051	mg/Kg wet							
1,4-Dichlorobenzene	ND	0.051	mg/Kg wet							
Dichlorodifluoromethane (Freon 12)	ND	0.10	mg/Kg wet							
1,1-Dichloroethane	ND	0.051	mg/Kg wet							
1,2-Dichloroethane	ND	0.051	mg/Kg wet							
1,1-Dichloroethylene	ND	0.051	mg/Kg wet							
cis-1,2-Dichloroethylene	ND	0.051	mg/Kg wet							
trans-1,2-Dichloroethylene	ND	0.051	mg/Kg wet							
1,2-Dichloropropane	ND	0.051	mg/Kg wet							
1,3-Dichloropropane	ND	0.025	mg/Kg wet							
2,2-Dichloropropane	ND	0.51	mg/Kg wet							
1,1-Dichloropropene	ND	0.10	mg/Kg wet							
cis-1,3-Dichloropropene	ND	0.10	mg/Kg wet							
trans-1,3-Dichloropropene	ND	0.10	mg/Kg wet							
Diethyl Ether	ND	0.10	mg/Kg wet							
Diisopropyl Ether (DIPE)	ND	0.025	mg/Kg wet							
1,4-Dioxane	ND	5.1	mg/Kg wet							V-16
Ethylbenzene	ND	0.051	mg/Kg wet							
Hexachlorobutadiene	ND	0.051	mg/Kg wet							
2-Hexanone (MBK)	ND	2.0	mg/Kg wet							V-05
Isopropylbenzene (Cumene)	ND	0.051	mg/Kg wet							
p-Isopropyltoluene (p-Cymene)	ND	0.051	mg/Kg wet							
Methyl tert-Butyl Ether (MTBE)	ND	0.20	mg/Kg wet							
Methylene Chloride	ND	0.25	mg/Kg wet							
4-Methyl-2-pentanone (MIBK)	ND	1.0	mg/Kg wet							V-05
Naphthalene	ND	0.51	mg/Kg wet							V-05

con-test® ANALYTICAL LABORATORY

39 Spruce Street * East Longmeadow, MA 01028 * FAX 413/525-6405 * TEL. 413/525-2332

QUALITY CONTROL

Volatile Organic Compounds by GC/MS - Quality Control

Analyte	Result	Reporting Limit	Units	Spike Level	Source Result	%REC		%REC Limits	RPD	RPD Limit	Notes	
Batch B018744 - SW-846 5035												
Blank (B018744-BLK1)				Prepared & Analyzed: 09/03/10								
n-Propylbenzene	ND	0.051	mg/Kg wet									
Styrene	ND	0.051	mg/Kg wet									
1,1,1,2-Tetrachloroethane	ND	0.20	mg/Kg wet									
1,1,2,2-Tetrachloroethane	ND	0.10	mg/Kg wet									
Tetrachloroethylene	ND	0.051	mg/Kg wet									
Tetrahydrofuran	ND	0.51	mg/Kg wet								V-05	
Toluene	ND	0.051	mg/Kg wet									
1,2,3-Trichlorobenzene	ND	0.25	mg/Kg wet								V-05	
1,2,4-Trichlorobenzene	ND	0.051	mg/Kg wet									
1,1,1-Trichloroethane	ND	0.10	mg/Kg wet									
1,1,2-Trichloroethane	ND	0.051	mg/Kg wet									
Trichloroethylene	ND	0.051	mg/Kg wet									
Trichlorofluoromethane (Freon 11)	ND	0.10	mg/Kg wet									
1,2,3-Trichloropropane	ND	0.10	mg/Kg wet								V-05	
1,2,4-Trimethylbenzene	ND	0.051	mg/Kg wet									
1,3,5-Trimethylbenzene	ND	0.051	mg/Kg wet									
Vinyl Chloride	ND	0.10	mg/Kg wet									
m+p Xylene	ND	0.10	mg/Kg wet									
o-Xylene	ND	0.051	mg/Kg wet									
Surrogate: 1,2-Dichloroethane-d4	*1.15*		mg/Kg wet	1.33		86.4		70-130				
Surrogate: Toluene-d8	*1.07*		mg/Kg wet	1.33		80.5		70-130				
Surrogate: 4-Bromofluorobenzene	*0.975*		mg/Kg wet	1.33		73.2		70-130				
LCS (B018744-BS1)				Prepared & Analyzed: 09/03/10								
Acetone	26.7	11	mg/Kg wet	22.7		118		40-160				†
tert-Amyl Methyl Ether (TAME)	2.01	0.45	mg/Kg wet	2.27		88.7		70-130				
Benzene	2.26	0.23	mg/Kg wet	2.27		99.7		70-130				
Bromobenzene	2.25	0.23	mg/Kg wet	2.27		99.2		70-130				
Bromochloromethane	2.46	0.23	mg/Kg wet	2.27		108		70-130				
Bromodichloromethane	2.33	0.45	mg/Kg wet	2.27		103		70-130				
Bromoform	1.94	2.3	mg/Kg wet	2.27		85.6		70-130				
Bromomethane	0.734	0.45	mg/Kg wet	2.27		**32.4**	*	40-160			L-04, V-06	†
2-Butanone (MEK)	18.4	4.5	mg/Kg wet	22.7		81.3		40-160			V-05	†
n-Butylbenzene	2.50	0.23	mg/Kg wet	2.27		110		70-130				
sec-Butylbenzene	2.53	0.23	mg/Kg wet	2.27		112		70-130				
tert-Butylbenzene	2.46	0.23	mg/Kg wet	2.27		109		70-130				
tert-Butyl Ethyl Ether (TBEE)	2.22	0.45	mg/Kg wet	2.27		98.1		70-130				
Carbon Disulfide	2.78	2.3	mg/Kg wet	2.27		123		70-130				
Carbon Tetrachloride	2.33	2.3	mg/Kg wet	2.27		103		70-130				
Chlorobenzene	2.22	0.23	mg/Kg wet	2.27		97.8		70-130				
Chlorodibromomethane	2.07	0.91	mg/Kg wet	2.27		91.5		70-130				
Chloroethane	1.51	4.5	mg/Kg wet	2.27		**66.6**	*	70-130			L-04, R-05	
Chloroform	2.54	0.45	mg/Kg wet	2.27		112		70-130				
Chloromethane	1.70	0.45	mg/Kg wet	2.27		74.9		40-160				†
2-Chlorotoluene	2.34	0.23	mg/Kg wet	2.27		103		70-130				
4-Chlorotoluene	2.44	0.23	mg/Kg wet	2.27		108		70-130				
1,2-Dibromo-3-chloropropane (DBCP)	2.11	2.3	mg/Kg wet	2.27		92.9		70-130			V-05	
1,2-Dibromoethane (EDB)	2.09	0.91	mg/Kg wet	2.27		92.0		70-130				
Dibromomethane	2.46	0.23	mg/Kg wet	2.27		109		70-130				
1,2-Dichlorobenzene	2.36	0.23	mg/Kg wet	2.27		104		70-130				
1,3-Dichlorobenzene	2.36	0.23	mg/Kg wet	2.27		104		70-130				
1,4-Dichlorobenzene	2.33	0.23	mg/Kg wet	2.27		103		70-130				

con-test® ANALYTICAL LABORATORY

39 Spruce Street * East Longmeadow, MA 01028 * FAX 413/525-6405 * TEL. 413/525-2332

QUALITY CONTROL

Volatile Organic Compounds by GC/MS - Quality Control

Analyte	Result	Reporting Limit	Units	Spike Level	Source Result	%REC	%REC Limits	RPD	RPD Limit	Notes	
Batch B018744 - SW-846 5035											
LCS (B018744-BS1)				Prepared & Analyzed: 09/03/10							
Dichlorodifluoromethane (Freon 12)	1.57	0.45	mg/Kg wet	2.27		69.4	40-160			L-14	†
1,1-Dichloroethane	2.36	0.23	mg/Kg wet	2.27		104	70-130				
1,2-Dichloroethane	2.49	0.23	mg/Kg wet	2.27		110	70-130				
1,1-Dichloroethylene	2.60	0.23	mg/Kg wet	2.27		115	70-130				
cis-1,2-Dichloroethylene	2.39	0.23	mg/Kg wet	2.27		106	70-130				
trans-1,2-Dichloroethylene	2.59	0.23	mg/Kg wet	2.27		114	70-130				
1,2-Dichloropropane	2.20	0.23	mg/Kg wet	2.27		97.0	70-130				
1,3-Dichloropropane	2.20	0.11	mg/Kg wet	2.27		96.9	70-130				
2,2-Dichloropropane	2.63	2.3	mg/Kg wet	2.27		116	70-130				
1,1-Dichloropropene	2.37	0.45	mg/Kg wet	2.27		104	70-130				
cis-1,3-Dichloropropene	2.09	0.45	mg/Kg wet	2.27		92.0	70-130				
trans-1,3-Dichloropropene	2.24	0.45	mg/Kg wet	2.27		98.9	70-130				
Diethyl Ether	2.33	0.45	mg/Kg wet	2.27		103	70-130				
Diisopropyl Ether (DIPE)	2.22	0.11	mg/Kg wet	2.27		97.9	70-130				
1,4-Dioxane	19.7	23	mg/Kg wet	22.7		86.8	40-160			V-16	†
Ethylbenzene	2.35	0.23	mg/Kg wet	2.27		104	70-130				
Hexachlorobutadiene	2.53	0.23	mg/Kg wet	2.27		112	70-130				
2-Hexanone (MBK)	18.3	9.1	mg/Kg wet	22.7		80.7	40-160			V-05	†
Isopropylbenzene (Cumene)	2.77	0.23	mg/Kg wet	2.27		122	70-130				
p-Isopropyltoluene (p-Cymene)	2.50	0.23	mg/Kg wet	2.27		110	70-130				
Methyl tert-Butyl Ether (MTBE)	2.26	0.91	mg/Kg wet	2.27		99.9	70-130				
Methylene Chloride	2.32	1.1	mg/Kg wet	2.27		102	70-130				†
4-Methyl-2-pentanone (MIBK)	17.4	4.5	mg/Kg wet	22.7		76.6	40-160			V-05	†
Naphthalene	1.62	2.3	mg/Kg wet	2.27		71.4	70-130			V-05	†
n-Propylbenzene	2.34	0.23	mg/Kg wet	2.27		103	70-130				
Styrene	2.23	0.23	mg/Kg wet	2.27		98.3	70-130				
1,1,1,2-Tetrachloroethane	2.09	0.91	mg/Kg wet	2.27		92.1	70-130				
1,1,2,2-Tetrachloroethane	1.99	0.45	mg/Kg wet	2.27		87.9	70-130				
Tetrachloroethylene	2.30	0.23	mg/Kg wet	2.27		102	70-130				
Tetrahydrofuran	2.01	2.3	mg/Kg wet	2.27		88.6	70-130			V-05	
Toluene	2.30	0.23	mg/Kg wet	2.27		101	70-130				
1,2,3-Trichlorobenzene	2.03	1.1	mg/Kg wet	2.27		89.4	70-130			V-05	
1,2,4-Trichlorobenzene	2.13	0.23	mg/Kg wet	2.27		93.9	70-130				
1,1,1-Trichloroethane	2.58	0.45	mg/Kg wet	2.27		114	70-130				
1,1,2-Trichloroethane	2.15	0.23	mg/Kg wet	2.27		95.0	70-130				
Trichloroethylene	2.36	0.23	mg/Kg wet	2.27		104	70-130				
Trichlorofluoromethane (Freon 11)	2.67	0.45	mg/Kg wet	2.27		118	70-130			V-06	
1,2,3-Trichloropropane	1.96	0.45	mg/Kg wet	2.27		86.5	70-130			V-05	
1,2,4-Trimethylbenzene	2.46	0.23	mg/Kg wet	2.27		109	70-130				
1,3,5-Trimethylbenzene	2.33	0.23	mg/Kg wet	2.27		103	70-130				
Vinyl Chloride	2.38	0.45	mg/Kg wet	2.27		105	70-130				†
m+p Xylene	4.73	0.45	mg/Kg wet	4.53		104	70-130				
o-Xylene	2.38	0.23	mg/Kg wet	2.27		105	70-130				
Surrogate: 1,2-Dichloroethane-d4	*6.14*		mg/Kg wet	5.33		115	70-130				
Surrogate: Toluene-d8	*5.80*		mg/Kg wet	5.33		109	70-130				
Surrogate: 4-Bromofluorobenzene	*5.54*		mg/Kg wet	5.33		104	70-130				

con-test® ANALYTICAL LABORATORY

39 Spruce Street * East Longmeadow, MA 01028 * FAX 413/525-6405 * TEL. 413/525-2332

QUALITY CONTROL

Volatile Organic Compounds by GC/MS - Quality Control

Analyte	Result	Reporting Limit	Units	Spike Level	Source Result	%REC		%REC Limits	RPD		RPD Limit	Notes	
Batch B018744 - SW-846 5035													
LCS Dup (B018744-BSD1)				Prepared & Analyzed: 09/03/10									
Acetone	24.5	11	mg/Kg wet	22.7		108		40-160	8.82		20		†
tert-Amyl Methyl Ether (TAME)	1.96	0.45	mg/Kg wet	2.27		86.5		70-130	2.51		20		
Benzene	2.16	0.23	mg/Kg wet	2.27		95.3		70-130	4.51		20		
Bromobenzene	2.24	0.23	mg/Kg wet	2.27		98.8		70-130	0.404		20		
Bromochloromethane	2.32	0.23	mg/Kg wet	2.27		102		70-130	5.98		20		
Bromodichloromethane	2.36	0.45	mg/Kg wet	2.27		104		70-130	1.45		20		
Bromoform	1.98	2.3	mg/Kg wet	2.27		87.5		70-130	2.20		20		
Bromomethane	0.626	0.45	mg/Kg wet	2.27		**27.6**	*	40-160	16.0		20	L-04, V-06	†
2-Butanone (MEK)	17.7	4.5	mg/Kg wet	22.7		78.2		40-160	3.94		20	V-05	†
n-Butylbenzene	2.41	0.23	mg/Kg wet	2.27		106		70-130	3.88		20		
sec-Butylbenzene	2.48	0.23	mg/Kg wet	2.27		109		70-130	2.17		20		
tert-Butylbenzene	2.36	0.23	mg/Kg wet	2.27		104		70-130	4.23		20		
tert-Butyl Ethyl Ether (TBEE)	2.17	0.45	mg/Kg wet	2.27		95.7		70-130	2.48		20		
Carbon Disulfide	2.62	2.3	mg/Kg wet	2.27		116		70-130	5.79		20		
Carbon Tetrachloride	2.23	2.3	mg/Kg wet	2.27		98.2		70-130	4.77		20		
Chlorobenzene	2.16	0.23	mg/Kg wet	2.27		95.1		70-130	2.80		20		
Chlorodibromomethane	2.08	0.91	mg/Kg wet	2.27		91.9		70-130	0.436		20		
Chloroethane	1.16	4.5	mg/Kg wet	2.27		**51.3**	*	70-130	**26.0**	*	20	L-04, R-05	
Chloroform	2.46	0.45	mg/Kg wet	2.27		108		70-130	3.35		20		
Chloromethane	1.65	0.45	mg/Kg wet	2.27		72.6		40-160	3.12		20		†
2-Chlorotoluene	2.26	0.23	mg/Kg wet	2.27		99.6		70-130	3.74		20		
4-Chlorotoluene	2.36	0.23	mg/Kg wet	2.27		104		70-130	3.59		20		
1,2-Dibromo-3-chloropropane (DBCP)	2.04	2.3	mg/Kg wet	2.27		90.0		70-130	3.17		20	V-05	
1,2-Dibromoethane (EDB)	2.14	0.91	mg/Kg wet	2.27		94.5		70-130	2.68		20		
Dibromomethane	2.26	0.23	mg/Kg wet	2.27		99.6		70-130	8.65		20		
1,2-Dichlorobenzene	2.29	0.23	mg/Kg wet	2.27		101		70-130	2.73		20		
1,3-Dichlorobenzene	2.22	0.23	mg/Kg wet	2.27		98.0		70-130	6.04		20		
1,4-Dichlorobenzene	2.28	0.23	mg/Kg wet	2.27		101		70-130	2.16		20		
Dichlorodifluoromethane (Freon 12)	1.50	0.45	mg/Kg wet	2.27		66.3		40-160	4.57		20	L-14	†
1,1-Dichloroethane	2.24	0.23	mg/Kg wet	2.27		98.9		70-130	5.12		20		
1,2-Dichloroethane	2.51	0.23	mg/Kg wet	2.27		111		70-130	0.635		20		
1,1-Dichloroethylene	2.61	0.23	mg/Kg wet	2.27		115		70-130	0.435		20		
cis-1,2-Dichloroethylene	2.42	0.23	mg/Kg wet	2.27		107		70-130	1.13		20		
trans-1,2-Dichloroethylene	2.53	0.23	mg/Kg wet	2.27		112		70-130	2.30		20		
1,2-Dichloropropane	2.23	0.23	mg/Kg wet	2.27		98.2		70-130	1.23		20		
1,3-Dichloropropane	2.21	0.11	mg/Kg wet	2.27		97.3		70-130	0.412		20		
2,2-Dichloropropane	2.38	2.3	mg/Kg wet	2.27		105		70-130	10.1		20		
1,1-Dichloropropene	2.28	0.45	mg/Kg wet	2.27		101		70-130	3.61		20		
cis-1,3-Dichloropropene	2.02	0.45	mg/Kg wet	2.27		89.3		70-130	2.98		20		
trans-1,3-Dichloropropene	2.23	0.45	mg/Kg wet	2.27		98.3		70-130	0.609		20		
Diethyl Ether	2.48	0.45	mg/Kg wet	2.27		109		70-130	6.22		20		
Diisopropyl Ether (DIPE)	2.19	0.11	mg/Kg wet	2.27		96.4		70-130	1.54		20		
1,4-Dioxane	23.0	23	mg/Kg wet	22.7		101		40-160	15.6		20	V-16	† ‡
Ethylbenzene	2.26	0.23	mg/Kg wet	2.27		99.7		70-130	4.03		20		
Hexachlorobutadiene	2.50	0.23	mg/Kg wet	2.27		110		70-130	1.08		20		
2-Hexanone (MBK)	18.5	9.1	mg/Kg wet	22.7		81.6		40-160	1.08		20	V-05	†
Isopropylbenzene (Cumene)	2.60	0.23	mg/Kg wet	2.27		115		70-130	6.08		20		
p-Isopropyltoluene (p-Cymene)	2.44	0.23	mg/Kg wet	2.27		108		70-130	2.39		20		
Methyl tert-Butyl Ether (MTBE)	2.24	0.91	mg/Kg wet	2.27		99.0		70-130	0.905		20		
Methylene Chloride	2.17	1.1	mg/Kg wet	2.27		95.6		70-130	6.77		20		†
4-Methyl-2-pentanone (MIBK)	18.1	4.5	mg/Kg wet	22.7		79.8		40-160	4.03		20	V-05	†
Naphthalene	1.63	2.3	mg/Kg wet	2.27		72.0		70-130	0.837		20	V-05	†

con-test® ANALYTICAL LABORATORY

39 Spruce Street * East Longmeadow, MA 01028 * FAX 413/525-6405 * TEL. 413/525-2332

QUALITY CONTROL

Volatile Organic Compounds by GC/MS - Quality Control

Analyte	Result	Reporting Limit	Units	Spike Level	Source Result	%REC	%REC Limits	RPD	RPD Limit	Notes	
Batch B018744 - SW-846 5035											
LCS Dup (B018744-BSD1)				Prepared & Analyzed: 09/03/10							
n-Propylbenzene	2.26	0.23	mg/Kg wet	2.27		99.8	70-130	3.25	20		
Styrene	2.09	0.23	mg/Kg wet	2.27		92.1	70-130	6.51	20		
1,1,1,2-Tetrachloroethane	2.09	0.91	mg/Kg wet	2.27		92.3	70-130	0.217	20		
1,1,2,2-Tetrachloroethane	2.02	0.45	mg/Kg wet	2.27		89.3	70-130	1.58	20		
Tetrachloroethylene	2.33	0.23	mg/Kg wet	2.27		103	70-130	1.37	20		
Tetrahydrofuran	1.84	2.3	mg/Kg wet	2.27		81.0	70-130	8.96	20	V-05	
Toluene	2.18	0.23	mg/Kg wet	2.27		96.0	70-130	5.47	20		
1,2,3-Trichlorobenzene	2.00	1.1	mg/Kg wet	2.27		88.4	70-130	1.12	20	V-05	
1,2,4-Trichlorobenzene	2.05	0.23	mg/Kg wet	2.27		90.6	70-130	3.58	20		
1,1,1-Trichloroethane	2.45	0.45	mg/Kg wet	2.27		108	70-130	5.31	20		
1,1,2-Trichloroethane	2.21	0.23	mg/Kg wet	2.27		97.3	70-130	2.39	20		
Trichloroethylene	2.26	0.23	mg/Kg wet	2.27		99.6	70-130	4.23	20		
Trichlorofluoromethane (Freon 11)	2.68	0.45	mg/Kg wet	2.27		118	70-130	0.169	20	V-06	
1,2,3-Trichloropropane	1.82	0.45	mg/Kg wet	2.27		80.2	70-130	7.56	20	V-05	
1,2,4-Trimethylbenzene	2.33	0.23	mg/Kg wet	2.27		103	70-130	5.39	20		
1,3,5-Trimethylbenzene	2.24	0.23	mg/Kg wet	2.27		98.8	70-130	3.87	20		
Vinyl Chloride	2.33	0.45	mg/Kg wet	2.27		103	70-130	2.12	20		†
m+p Xylene	4.49	0.45	mg/Kg wet	4.53		99.1	70-130	5.11	20		
o-Xylene	2.23	0.23	mg/Kg wet	2.27		98.4	70-130	6.39	20		
Surrogate: 1,2-Dichloroethane-d4	*5.95*		mg/Kg wet	5.33		112	70-130				
Surrogate: Toluene-d8	*5.73*		mg/Kg wet	5.33		108	70-130				
Surrogate: 4-Bromofluorobenzene	*5.67*		mg/Kg wet	5.33		106	70-130				
Batch B019237 - SW-846 5035											
Blank (B019237-BLK1)				Prepared & Analyzed: 09/07/10							
Trichloroethylene	ND	0.051	mg/Kg wet								
Surrogate: 1,2-Dichloroethane-d4	*1.22*		mg/Kg wet	1.33		91.2	70-130				
Surrogate: Toluene-d8	*1.07*		mg/Kg wet	1.33		80.1	70-130				
Surrogate: 4-Bromofluorobenzene	*1.01*		mg/Kg wet	1.33		75.4	70-130				
LCS (B019237-BS1)				Prepared & Analyzed: 09/07/10							
Trichloroethylene	2.26	0.23	mg/Kg wet	2.27		99.7	70-130				
Surrogate: 1,2-Dichloroethane-d4	*5.62*		mg/Kg wet	5.33		105	70-130				
Surrogate: Toluene-d8	*5.55*		mg/Kg wet	5.33		104	70-130				
Surrogate: 4-Bromofluorobenzene	*5.62*		mg/Kg wet	5.33		105	70-130				
LCS Dup (B019237-BSD1)				Prepared & Analyzed: 09/07/10							
Trichloroethylene	2.41	0.23	mg/Kg wet	2.27		106	70-130	6.50	20		
Surrogate: 1,2-Dichloroethane-d4	*5.68*		mg/Kg wet	5.33		107	70-130				
Surrogate: Toluene-d8	*5.72*		mg/Kg wet	5.33		107	70-130				
Surrogate: 4-Bromofluorobenzene	*5.71*		mg/Kg wet	5.33		107	70-130				

con-test® ANALYTICAL LABORATORY

39 Spruce Street * East Longmeadow, MA 01028 * FAX 413/525-6405 * TEL. 413/525-2332

QUALITY CONTROL

Volatile Organic Compounds by GC/MS - Quality Control

Analyte	Result	Reporting Limit	Units	Spike Level	Source Result	%REC	%REC Limits	RPD	RPD Limit	Notes
Batch B019471 - SW-846 5035										
Blank (B019471-BLK1)				Prepared & Analyzed: 09/03/10						
cis-1,2-Dichloroethylene	ND	0.051	mg/Kg wet							
Trichloroethylene	ND	0.051	mg/Kg wet							
Surrogate: 1,2-Dichloroethane-d4	*1.15*		mg/Kg wet	1.33		86.4	70-130			
Surrogate: Toluene-d8	*1.07*		mg/Kg wet	1.33		80.5	70-130			
Surrogate: 4-Bromofluorobenzene	*0.975*		mg/Kg wet	1.33		73.2	70-130			
LCS (B019471-BS1)				Prepared & Analyzed: 09/03/10						
cis-1,2-Dichloroethylene	2.39	0.23	mg/Kg wet	2.27		106	70-130			
Trichloroethylene	2.36	0.23	mg/Kg wet	2.27		104	70-130			
Surrogate: 1,2-Dichloroethane-d4	*6.14*		mg/Kg wet	5.33		115	70-130			
Surrogate: Toluene-d8	*5.80*		mg/Kg wet	5.33		109	70-130			
Surrogate: 4-Bromofluorobenzene	*5.54*		mg/Kg wet	5.33		104	70-130			
LCS Dup (B019471-BSD1)				Prepared & Analyzed: 09/03/10						
cis-1,2-Dichloroethylene	2.42	0.23	mg/Kg wet	2.27		107	70-130	1.13	20	
Trichloroethylene	2.26	0.23	mg/Kg wet	2.27		99.6	70-130	4.23	20	
Surrogate: 1,2-Dichloroethane-d4	*5.95*		mg/Kg wet	5.33		112	70-130			
Surrogate: Toluene-d8	*5.73*		mg/Kg wet	5.33		108	70-130			
Surrogate: 4-Bromofluorobenzene	*5.67*		mg/Kg wet	5.33		106	70-130			

39 Spruce Street * East Longmeadow, MA 01028 * FAX 413/525-6405 * TEL. 413/525-2332

FLAG/QUALIFIER SUMMARY

*	QC result is outside of established limits.
†	Wide recovery limits estabished for difficult compound.
‡	Wide RPD limits estabished for difficult compound.
#	Data exceeded client recommended or regulatory level
	Percent recoveries and relative percent differences (RPDs) are determined by the software using values in the calculation which have not been rounded.
L-04	Laboratory fortified blank/laboratory control sample recovery and duplicate recovery are outside of control limits. Reported value for this compound is likely to be biased on the low side.
L-14	Compound classified by MA CAM as difficult with acceptable recoveries of 40-160%. Recovery does not meet 70-130% criteria but does meet difficult compound criteria.
R-05	Laboratory fortified blank duplicate RPD is outside of control limits. Reduced precision is anticipated for any reported value for this compound.
RL-05	Elevated reporting limit due to high concentration of target compounds. MA CAM reporting limit not met.
S-21	Surrogate was diluted below its calibration range due to elevated levels of target analytes.
V-05	Continuing calibration did not meet method specifications and was biased on the low side for this compound. Significant uncertainty is associated with the reported value which is likely to be biased on the low side.
V-06	Continuing calibration did not meet method specifications and was biased on the high side for this compound. Significant uncertainty is associated with the reported value which is likely to be biased on the high side.
V-16	Response factor is less than method specified minimum acceptable value. Reduced precision and accuracy are associated with reported result.

39 Spruce Street * East Longmeadow, MA 01028 * FAX 413/525-6405 * TEL. 413/525-2332

CERTIFICATIONS

Certified Analyses included in this Report

Analyte	Certifications
SW-846 8260B in Soil	
Acetone	CT,NH,NY,NC
Acetone	CT,NH,NY,NC
Acetone	CT,NH,NY,NC
tert-Amyl Methyl Ether (TAME)	NC
tert-Amyl Methyl Ether (TAME)	NC
tert-Amyl Methyl Ether (TAME)	NC
Benzene	CT,NH,NY,NC
Benzene	CT,NH,NY,NC
Benzene	CT,NH,NY,NC
Bromobenzene	NH,NY,NC
Bromobenzene	NH,NY,NC
Bromobenzene	NH,NY,NC
Bromochloromethane	NH,NY,NC
Bromochloromethane	NH,NY,NC
Bromochloromethane	NH,NY,NC
Bromodichloromethane	CT,NH,NY,NC
Bromodichloromethane	CT,NH,NY,NC
Bromodichloromethane	CT,NH,NY,NC
Bromoform	CT,NH,NY,NC
Bromoform	CT,NH,NY,NC
Bromoform	CT,NH,NY,NC
Bromomethane	CT,NH,NY,NC
Bromomethane	CT,NH,NY,NC
Bromomethane	CT,NH,NY,NC
2-Butanone (MEK)	CT,NH,NY,NC
2-Butanone (MEK)	CT,NH,NY,NC
2-Butanone (MEK)	CT,NH,NY,NC
n-Butylbenzene	CT,NH,NY,NC
n-Butylbenzene	CT,NH,NY,NC
n-Butylbenzene	CT,NH,NY,NC
sec-Butylbenzene	CT,NH,NY,NC
sec-Butylbenzene	CT,NH,NY,NC
sec-Butylbenzene	CT,NH,NY,NC
tert-Butylbenzene	CT,NH,NY,NC
tert-Butylbenzene	CT,NH,NY,NC
tert-Butylbenzene	CT,NH,NY,NC
tert-Butyl Ethyl Ether (TBEE)	NC
tert-Butyl Ethyl Ether (TBEE)	NC
tert-Butyl Ethyl Ether (TBEE)	NC
Carbon Disulfide	CT,NH,NY,NC
Carbon Disulfide	CT,NH,NY,NC
Carbon Disulfide	CT,NH,NY,NC
Carbon Tetrachloride	CT,NH,NY,NC
Carbon Tetrachloride	CT,NH,NY,NC
Carbon Tetrachloride	CT,NH,NY,NC
Chlorobenzene	CT,NH,NY,NC
Chlorobenzene	CT,NH,NY,NC

39 Spruce Street * East Longmeadow, MA 01028 * FAX 413/525-6405 * TEL. 413/525-2332

CERTIFICATIONS

Certified Analyses included in this Report

Analyte	Certifications
SW-846 8260B in Soil	
Chlorobenzene	CT,NH,NY,NC
Chlorodibromomethane	CT,NH,NY,NC
Chlorodibromomethane	CT,NH,NY,NC
Chlorodibromomethane	CT,NH,NY,NC
Chloroethane	CT,NH,NY,NC
Chloroethane	CT,NH,NY,NC
Chloroethane	CT,NH,NY,NC
Chloroform	CT,NH,NY,NC
Chloroform	CT,NH,NY,NC
Chloroform	CT,NH,NY,NC
Chloromethane	CT,NH,NY,NC
Chloromethane	CT,NH,NY,NC
Chloromethane	CT,NH,NY,NC
2-Chlorotoluene	CT,NH,NY,NC
2-Chlorotoluene	CT,NH,NY,NC
2-Chlorotoluene	CT,NH,NY,NC
4-Chlorotoluene	CT,NH,NY,NC
4-Chlorotoluene	CT,NH,NY,NC
4-Chlorotoluene	CT,NH,NY,NC
1,2-Dibromo-3-chloropropane (DBCP)	NC
1,2-Dibromo-3-chloropropane (DBCP)	NC
1,2-Dibromo-3-chloropropane (DBCP)	NC
1,2-Dibromoethane (EDB)	NC
1,2-Dibromoethane (EDB)	NC
1,2-Dibromoethane (EDB)	NC
Dibromomethane	NH,NY,NC
Dibromomethane	NH,NY,NC
Dibromomethane	NH,NY,NC
1,2-Dichlorobenzene	CT,NH,NY,NC
1,2-Dichlorobenzene	CT,NH,NY,NC
1,2-Dichlorobenzene	CT,NH,NY,NC
1,3-Dichlorobenzene	CT,NH,NY,NC
1,3-Dichlorobenzene	CT,NH,NY,NC
1,3-Dichlorobenzene	CT,NH,NY,NC
1,4-Dichlorobenzene	CT,NH,NY,NC
1,4-Dichlorobenzene	CT,NH,NY,NC
1,4-Dichlorobenzene	CT,NH,NY,NC
Dichlorodifluoromethane (Freon 12)	NY,NC
Dichlorodifluoromethane (Freon 12)	NY,NC
Dichlorodifluoromethane (Freon 12)	NY,NC
1,1-Dichloroethane	CT,NH,NY,NC
1,1-Dichloroethane	CT,NH,NY,NC
1,1-Dichloroethane	CT,NH,NY,NC
1,2-Dichloroethane	CT,NH,NY,NC
1,2-Dichloroethane	CT,NH,NY,NC
1,2-Dichloroethane	CT,NH,NY,NC
1,1-Dichloroethylene	CT,NH,NY,NC

con-test® ANALYTICAL LABORATORY

39 Spruce Street * East Longmeadow, MA 01028 * FAX 413/525-6405 * TEL. 413/525-2332

CERTIFICATIONS

Certified Analyses included in this Report

Analyte	Certifications
SW-846 8260B in Soil	
1,1-Dichloroethylene	CT,NH,NY,NC
1,1-Dichloroethylene	CT,NH,NY,NC
cis-1,2-Dichloroethylene	CT,NH,NY,NC
cis-1,2-Dichloroethylene	CT,NH,NY,NC
cis-1,2-Dichloroethylene	CT,NH,NY,NC
trans-1,2-Dichloroethylene	CT,NH,NY,NC
trans-1,2-Dichloroethylene	CT,NH,NY,NC
trans-1,2-Dichloroethylene	CT,NH,NY,NC
1,2-Dichloropropane	CT,NH,NY,NC
1,2-Dichloropropane	CT,NH,NY,NC
1,2-Dichloropropane	CT,NH,NY,NC
1,3-Dichloropropane	NH,NY,NC
1,3-Dichloropropane	NH,NY,NC
1,3-Dichloropropane	NH,NY,NC
2,2-Dichloropropane	NH,NY,NC
2,2-Dichloropropane	NH,NY,NC
2,2-Dichloropropane	NH,NY,NC
1,1-Dichloropropene	NH,NY,NC
1,1-Dichloropropene	NH,NY,NC
1,1-Dichloropropene	NH,NY,NC
cis-1,3-Dichloropropene	CT,NH,NY,NC
cis-1,3-Dichloropropene	CT,NH,NY,NC
cis-1,3-Dichloropropene	CT,NH,NY,NC
trans-1,3-Dichloropropene	CT,NH,NY,NC
trans-1,3-Dichloropropene	CT,NH,NY,NC
trans-1,3-Dichloropropene	CT,NH,NY,NC
Diethyl Ether	NC
Diethyl Ether	NC
Diethyl Ether	NC
Diisopropyl Ether (DIPE)	NC
Diisopropyl Ether (DIPE)	NC
Diisopropyl Ether (DIPE)	NC
1,4-Dioxane	NC
1,4-Dioxane	NC
1,4-Dioxane	NC
Ethylbenzene	CT,NH,NY,NC
Ethylbenzene	CT,NH,NY,NC
Ethylbenzene	CT,NH,NY,NC
Hexachlorobutadiene	NH,NY,NC
Hexachlorobutadiene	NH,NY,NC
Hexachlorobutadiene	NH,NY,NC
2-Hexanone (MBK)	CT,NH,NY,NC
2-Hexanone (MBK)	CT,NH,NY,NC
2-Hexanone (MBK)	CT,NH,NY,NC
Isopropylbenzene (Cumene)	CT,NH,NY,NC
Isopropylbenzene (Cumene)	CT,NH,NY,NC
Isopropylbenzene (Cumene)	CT,NH,NY,NC

con-test® ANALYTICAL LABORATORY

39 Spruce Street * East Longmeadow, MA 01028 * FAX 413/525-6405 * TEL. 413/525-2332

CERTIFICATIONS

Certified Analyses included in this Report

Analyte	Certifications
SW-846 8260B in Soil	
p-Isopropyltoluene (p-Cymene)	NC
p-Isopropyltoluene (p-Cymene)	NC
p-Isopropyltoluene (p-Cymene)	NC
Methyl tert-Butyl Ether (MTBE)	NC
Methyl tert-Butyl Ether (MTBE)	NC
Methyl tert-Butyl Ether (MTBE)	NC
Methylene Chloride	CT,NH,NY,NC
Methylene Chloride	CT,NH,NY,NC
Methylene Chloride	CT,NH,NY,NC
4-Methyl-2-pentanone (MIBK)	CT,NH,NY,NC
4-Methyl-2-pentanone (MIBK)	CT,NH,NY,NC
4-Methyl-2-pentanone (MIBK)	CT,NH,NY,NC
Naphthalene	NH,NY,NC
Naphthalene	NH,NY,NC
Naphthalene	NH,NY,NC
n-Propylbenzene	NC
n-Propylbenzene	NC
n-Propylbenzene	NC
Styrene	CT,NH,NY,NC
Styrene	CT,NH,NY,NC
Styrene	CT,NH,NY,NC
1,1,1,2-Tetrachloroethane	CT,NH,NY,NC
1,1,1,2-Tetrachloroethane	CT,NH,NY,NC
1,1,1,2-Tetrachloroethane	CT,NH,NY,NC
1,1,2,2-Tetrachloroethane	CT,NH,NY,NC
1,1,2,2-Tetrachloroethane	CT,NH,NY,NC
1,1,2,2-Tetrachloroethane	CT,NH,NY,NC
Tetrachloroethylene	CT,NH,NY,NC
Tetrachloroethylene	CT,NH,NY,NC
Tetrachloroethylene	CT,NH,NY,NC
Tetrahydrofuran	NC
Tetrahydrofuran	NC
Tetrahydrofuran	NC
Toluene	CT,NH,NY,NC
Toluene	CT,NH,NY,NC
Toluene	CT,NH,NY,NC
1,2,3-Trichlorobenzene	NC
1,2,3-Trichlorobenzene	NC
1,2,3-Trichlorobenzene	NC
1,2,4-Trichlorobenzene	NH,NY,NC
1,2,4-Trichlorobenzene	NH,NY,NC
1,2,4-Trichlorobenzene	NH,NY,NC
1,1,1-Trichloroethane	CT,NH,NY,NC
1,1,1-Trichloroethane	CT,NH,NY,NC
1,1,1-Trichloroethane	CT,NH,NY,NC
1,1,2-Trichloroethane	CT,NH,NY,NC
1,1,2-Trichloroethane	CT,NH,NY,NC

39 Spruce Street * East Longmeadow, MA 01028 * FAX 413/525-6405 * TEL. 413/525-2332

CERTIFICATIONS

Certified Analyses included in this Report

Analyte	Certifications
SW-846 8260B in Soil	
1,1,2-Trichloroethane	CT,NH,NY,NC
Trichloroethylene	CT,NH,NY,NC
Trichloroethylene	CT,NH,NY,NC
Trichloroethylene	CT,NH,NY,NC
Trichlorofluoromethane (Freon 11)	CT,NH,NY,NC
Trichlorofluoromethane (Freon 11)	CT,NH,NY,NC
Trichlorofluoromethane (Freon 11)	CT,NH,NY,NC
1,2,3-Trichloropropane	NH,NY,NC
1,2,3-Trichloropropane	NH,NY,NC
1,2,3-Trichloropropane	NH,NY,NC
1,2,4-Trimethylbenzene	CT,NH,NY,NC
1,2,4-Trimethylbenzene	CT,NH,NY,NC
1,2,4-Trimethylbenzene	CT,NH,NY,NC
1,3,5-Trimethylbenzene	CT,NH,NY,NC
1,3,5-Trimethylbenzene	CT,NH,NY,NC
1,3,5-Trimethylbenzene	CT,NH,NY,NC
Vinyl Chloride	CT,NH,NY,NC
Vinyl Chloride	CT,NH,NY,NC
Vinyl Chloride	CT,NH,NY,NC
m+p Xylene	CT,NH,NY,NC
m+p Xylene	CT,NH,NY,NC
m+p Xylene	CT,NH,NY,NC
o-Xylene	CT,NH,NY,NC
o-Xylene	CT,NH,NY,NC
o-Xylene	CT,NH,NY,NC

The CON-TEST Environmental Laboratory operates under the following certifications and accreditations:

Code	Description	Number	Expires
AIHA	American Industrial Hygiene Association	100033	01/1/2012
MA	Massachusetts DEP	M-MA100	06/30/2011
CT	Connecticut Department of Publilc Health	PH-0567	09/30/2011
NY	New York State Department of Health	10899 NELAP	04/1/2011
NH	New Hampshire Environmental Lab	2516 NELAP	02/5/2011
RI	Rhode Island Department of Health	LAO00112	12/30/2010
NC	North Carolina Div. of Water Quality	652	12/31/2010
NJ	New Jersey DEP	MA007 NELAP	06/30/2011
FL	Florida Department of Health	E871027 NELAP	06/30/2011
VT	Vermont Department of Health Lead Laboratory	LL015036	07/30/2011
WA	State of Washington Department of Ecology	C2065	02/23/2011

con-test® ANALYTICAL LABORATORY
Phone: 413-525-2332
Fax: 413-525-6405
Email: info@contestlabs.com
www.contestlabs.com
39 SPRUCE ST, 2ND FLOOR
EAST LONGMEADOW, MA 01028

CHAIN OF CUSTODY RECORD

10I 0004

Page 1 of 1

Company Name: TRC
Address: 650 Suffolk St.
Lowell MA 01854
Attention: David Sullivan
Project Location: City of New Bedford
Sampled By: J. Saunders

Telephone: (978) 656-3565
Project # 115058
Client PO # 26827

DATA DELIVERY (check one):
☐ FAX ☒ EMAIL ☐ WEBSITE CLIENT
Fax # :
Email: dsullivan@trcsolutions.com
Format: ☒ EXCEL ☐ PDF ☒ GIS KEY
☐ OTHER

Proposal Provided? (For Billing purposes) ☒ yes 2007 proposal date

State Form Required? ☒ yes ☐ no

ANALYSIS REQUESTED

Field ID	Sample Description	Lab #	Date Sampled Start Date/Time	Stop Date/Time	Composite	Grab	*Matrix	Conc. Code	VOCs (8260)	TOC	Oil Fingerprint	8260									# of containe	**Preservati	~Cont.Code
									4	1													
									M/O	Ice													
									G/V	G													
	MW-27 (6-8)	-01	8/30/10	1340		X	S	U	X														
	MW-28 (8-10)	02	8/30/10	1445		X	S	U	X	X													
	MW-27	03	8/30/10	1700		X	W	H			X	(*)											
	0-41-10 22:53 IN																						
	(*) Per attached email, analyze MW-27 for a full 8260 and analyze DNAPL layer (MK) 9/2/10																						

Client Comments:

Laboratory Comments: ~~(*) analyze oil layer for MW-27 for fingerprint per Dave S (HB) 9/2/10~~

Please use the following codes to let Con-Test know if a specific sample may be high in concentration in **Matrix/Conc.** Code Box:
H - High; **M** - Medium; **L** - Low; **C** - Clean; **U** - Unknown

~Cont. Code:
A=amber glass
G=glass
P=plastic
ST=sterile
V=vial
S=summa can
T=tedlar bag
O=Other

Relinquished by: (signature)	Date/Time: 8/31/10 1200
Received by: (signature)	Date/Time: 8/31 1700
Relinquished by: (signature)	Date/Time: 8/31 2000
Received by: (signature) Paula Blakeborough	Date/Time: 8/31/10 2000

Turnaround **
☐ 7-Day
☐ 10-Day
☒ Other 5 day
RUSH *
☐ *24-Hr ☐ *48-Hr
☐ *72-Hr ☐ *4-Day
* Require lab approval

Detection Limit Requirements
Regulations? MCP
Data Enhancement Project/RCP? ☒ Y ☐ N
Special Requirements or DL's: See Quote

***Matrix Code:**
GW= groundwater
WW= wastewater
DW= drinking water
A = air
S = soil/solid
SL = sludge
O = other

****Preservation Codes:**
I = Iced
H = HCL
M = Methanol
N = Nitric Acid
S = Sulfuric Acid
B = Sodium bisulfate
O = Other
X = Na hydroxide
T = Na thiosulfate

*: TURNAROUND TIME STARTS AT 9:00 A.M. THE DAY AFTER SAMPLE RECEIPT UNLESS THERE ARE QUESTIONS ON YOUR CHAIN. IF THIS FORM IS NOT FILLED OUT COMPLETELY OR IS INCORRECT, TURNAROUND TIME WILL NOT START UNTIL ALL QUESTIONS ARE ANSWERED BY OUR CLIENT.

AIHA, NELAC & WBE/DBE Certified

www.contestlabs.com

con-test® ANALYTICAL LABORATORY

39 Spruce St.
East Longmeadow, MA.
01028
P: 413-525-2332
F: 413-525-6405

Sample Receipt Checklist

CLIENT NAME: TRC RECEIVED BY: PB DATE: 8/31/10

1) Was the chain(s) of custody relinquished and signed? (Yes) No

2) Does the chain agree with the samples? (Yes) No

If not, explain:

3) Are all the samples in good condition? (Yes) No

If not, explain:

4) How were the samples received:

On Ice ☒ Direct from Sampling ☐ Ambient ☐ In Cooler(s) ☒

Were the samples received in Temperature Compliance of (2-6°C)? (Yes) No N/A

Temperature °C by Temp blank _____ Temperature °C by Temp gun 5°

5) Are there Dissolved samples for the lab to filter? Yes (No)

Who was notified _____ Date _____ Time _____

6) Are there any samples "On Hold"? Yes (No) Stored where: _____

7) Are there any RUSH or SHORT HOLDING TIME samples? Yes (No)

Who was notified _____ Date _____ Time _____

8) Location where samples are stored: 19

Permission to subcontract samples? Yes No
(Walk-in clients only) if not already approved
Client Signature:

Containers received at Con-Test

	# of containers		# of containers
1 Liter Amber		8 oz amber/clear jar	2
500 mL Amber		4 oz amber/clear jar	
250 mL Amber (8oz amber)		2 oz amber/clear jar	2
1 Liter Plastic		Other glass jar	
500 mL Plastic		Plastic Bag / Ziploc	
250 mL plastic		Air Cassette	
40 mL Vial - type listed below	6	SOC Kit	
Colisure / bacteria bottle		Tubes	
Dissolved Oxygen bottle		Non-ConTest Container	
Flashpoint bottle		Other	
Encore		PM 2.5 / PM 10	
Perchlorate Kit		PUF Cartridge	

Laboratory Comments:

40 mL vials: # HCl _____ # Methanol 2

Bisulfate _____ # DI Water 4

Thiosulfate _____ Unpreserved _____

Time and Date Frozen: 08-31-10 [illegible]

Do all samples have the proper Acid pH: Yes No N/A _____

Do all samples have the proper Base pH: Yes No N/A _____

June 2010

Meghan Kelley

From: Sullivan, Dave (Lowell,MA-US) [DSullivan@trcsolutions.com]
Sent: Thursday, September 02, 2010 2:14 PM
To: Meghan Kelley
Cc: Leonard, Alfred (Lowell,MA-US)
Subject: RE: City of New Bedford

Non-aqueous

David M. Sullivan, LSP, CHMM
Senior Project Manager

TRC

TRC
Wannalancit Mills
650 Suffolk Street
Lowell, Massachusetts 01854

978-656-3565 phone
978-453-1995 fax
978-758-2809 cell
dsullivan@trcsolutions.com

From: Meghan Kelley [mailto:mkelley@contestlabs.com]
Sent: Thursday, September 02, 2010 2:09 PM
To: Sullivan, Dave (Lowell,MA-US)
Cc: Leonard, Alfred (Lowell,MA-US)
Subject: RE: City of New Bedford

Hi Dave,

We can analyze the aqueous layer and/or the non aqueous phase liquid which is heavier than the aqueous layer for 8260.

-Meghan

From: Sullivan, Dave (Lowell,MA-US) [mailto:DSullivan@trcsolutions.com]
Sent: Thursday, September 02, 2010 11:31 AM
To: Meghan Kelley
Cc: Leonard, Alfred (Lowell,MA-US)
Subject: RE: City of New Bedford

Full 8260. I only mentioned chlorinated solvents because that's what we think it is.

Do you have a third phase (i.e., water, floater, sinker)?

David M. Sullivan, LSP, CHMM
Senior Project Manager

TRC
Wannalancit Mills
650 Suffolk Street
Lowell, Massachusetts 01854

978-656-3565 phone
978-453-1995 fax
978-758-2809 cell
dsullivan@trcsolutions.com

From: Meghan Kelley [mailto:mkelley@contestlabs.com]
Sent: Thursday, September 02, 2010 10:40 AM
To: Sullivan, Dave (Lowell,MA-US)
Subject: City of New Bedford

Hi Dave,

The lab wanted me to confirm if you wanted us to analyze for just chlorinated solvents or a full 8260 on either the DNAPL or the oil layer??

-Meghan

Meghan Kelley
Con-Test Analytical Laboratory
39 Spruce Street
East Longmeadow, MA 01028
Tel: (413) 525-2332 x55
Fax: (413) 525-6405
mkelley@contestlabs.com

ANALYTICAL REPORT

Lab Number:	L1013586
Client:	Con-Test Laboratory PO Box 591 39 Spruce Street East Longmeadow, MA 01028
ATTN:	Meghan Kelley
Phone:	(413) 525-2332
Project Name:	Not Specified
Project Number:	Not Specified
Report Date:	09/17/10

Certifications & Approvals: MA (M-MA086), NY NELAC (11148), CT (PH-0574), NH (2003), NJ (MA935), RI (LAO00065), ME (MA0086), PA (Registration #68-03671), USDA (Permit #S-72578), US Army Corps of Engineers, Naval FESC.

Eight Walkup Drive, Westborough, MA 01581-1019
508-898-9220 (Fax) 508-898-9193 800-624-9220 - www.alphalab.com

Project Name: Not Specified
Project Number: Not Specified

Lab Number: L1013586
Report Date: 09/17/10

Alpha Sample ID	Client ID	Sample Location	Collection Date/Time
L1013586-01	10I0004-02	Not Specified	08/30/10 14:45

Project Name: Not Specified
Project Number: Not Specified

Lab Number: L1013586
Report Date: 09/17/10

Case Narrative

The samples were received in accordance with the Chain of Custody and no significant deviations were encountered during the preparation or analysis unless otherwise noted. Sample Receipt, Container Information, and the Chain of Custody are located at the back of the report.

Results contained within this report relate only to the samples submitted under this Alpha Lab Number and meet all of the requirements of NELAC, for all NELAC accredited parameters. The data presented in this report is organized by parameter (i.e. VOC, SVOC, etc.). Sample specific Quality Control data (i.e. Surrogate Spike Recovery) is reported at the end of the target analyte list for each individual sample, followed by the Laboratory Batch Quality Control at the end of each parameter. If a sample was re-analyzed or re-extracted due to a required quality control corrective action and if both sets of data are reported, the Laboratory ID of the re-analysis or re-extraction is designated with an "R" or "RE", respectively. When multiple Batch Quality Control elements are reported (e.g. more than one LCS), the associated samples for each element are noted in the grey shaded header line of each data table. Any Laboratory Batch, Sample Specific % recovery or RPD value that is outside the listed Acceptance Criteria is bolded in the report. Definitions of all data qualifiers and acronyms used in this report are provided in the Glossary located at the back of the report.

Please see the associated ADEx data file for a comparison of laboratory reporting limits that were achieved with the regulatory Numerical Standards requested on the Chain of Custody.

For additional information, please contact Client Services at 800-624-9220.

I, the undersigned, attest under the pains and penalties of perjury that, to the best of my knowledge and belief and based upon my personal inquiry of those responsible for providing the information contained in this analytical report, such information is accurate and complete. This certificate of analysis is not complete unless this page accompanies any and all pages of this report.

Authorized Signature: Cynthia McQueen

Title: Technical Director/Representative

Date: 09/17/10

INORGANICS
&
MISCELLANEOUS

Project Name: Not Specified
Project Number: Not Specified

Lab Number: L1013586
Report Date: 09/17/10

SAMPLE RESULTS

Lab ID: L1013586-01
Client ID: 10I0004-02
Sample Location: Not Specified
Matrix: Soil

Date Collected: 08/30/10 14:45
Date Received: 09/02/10
Field Prep: Not Specified

Parameter	Result	Qualifier	Units	RL	MDL	Dilution Factor	Date Prepared	Date Analyzed	Analytical Method	Analyst
Total Organic Carbon - Mansfield Lab										
Total Organic Carbon	0.101		%	0.010	--	1	-	09/17/10 06:00	1,9060	NR
General Chemistry - Mansfield Lab										
Solids, Total	93.0		%	0.100	--	1	-	09/08/10 14:32	30,2540G	KB

Project Name:

Project Number: Not Specified

Lab Number: L1013586

Report Date: 09/17/10

Method Blank Analysis
Batch Quality Control

Parameter	Result	Qualifier	Units	RDL	Dilution Factor	Date Prepared	Date Analyzed	Analytical Method	Analyst
Total Organic Carbon - Mansfield Lab for sample(s): 01 Batch: WG431378-1									
Total Organic Carbon	ND		%	0.010	1	-	09/17/10 06:00	1,9060	NR

Lab Duplicate Analysis
Batch Quality Control

Project Name: Not Specified
Project Number: Not Specified

Lab Number: L1013586
Report Date: 09/17/10

Parameter	Native Sample	Duplicate Sample	Units	RPD	Qual	RPD Limits
General Chemistry - Mansfield Lab Associated sample(s): 01 QC Batch ID: WG431437-1 QC Sample: L1013586-01 Client ID: 10I0004-02						
Solids, Total	93	92.1	%	1		20

Project Name: Not Specified
Project Number: Not Specified

Lab Number: L1013586
Report Date: 09/17/10

S.R.M. Standard Quality Control

Standard Reference Material (SRM): WG431378-2

Parameter	% Recovery	Qual	QC Criteria
Total Organic Carbon	113		75-125

Project Name: Not Specified
Project Number: Not Specified

Lab Number: L1013586
Report Date: 09/17/10

Sample Receipt and Container Information

Were project specific reporting limits specified? YES

Reagent H2O Preserved Vials Frozen on: NA

Cooler Information Custody Seal

Cooler	
A	Absent

Container Information

Container ID	Container Type	Cooler	pH	Temp deg C	Pres	Seal	Analysis(*)
L1013586-01A	Glass 250ml unpreserved	A	N/A	4	Y	Absent	A2-TS(7),A2-TOC-9060(28)

*Values in parentheses indicate holding time in days

Project Name: Not Specified
Project Number: Not Specified
Lab Number: L1013586
Report Date: 09/17/10

GLOSSARY

Acronyms

EPA · Environmental Protection Agency.

LCS · Laboratory Control Sample: A sample matrix, free from the analytes of interest, spiked with verified known amounts of analytes or a material containing known and verified amounts of analytes.

LCSD · Laboratory Control Sample Duplicate: Refer to LCS.

MDL · Method Detection Limit: This value represents the level to which target analyte concentrations are reported as estimated values, when those target analyte concentrations are quantified below the reporting limit (RL). The MDL includes any adjustments from dilutions, concentrations or moisture content, where applicable.

MS · Matrix Spike Sample: A sample prepared by adding a known mass of target analyte to a specified amount of matrix sample for which an independent estimate of target analyte concentration is available.

MSD · Matrix Spike Sample Duplicate: Refer to MS.

NA · Not Applicable.

NC · Not Calculated: Term is utilized when one or more of the results utilized in the calculation are non-detect at the parameter's reporting unit.

NI · Not Ignitable.

RL · Reporting Limit: The value at which an instrument can accurately measure an analyte at a specific concentration. The RL includes any adjustments from dilutions, concentrations or moisture content, where applicable.

RPD · Relative Percent Difference: The results from matrix and/or matrix spike duplicates are primarily designed to assess the precision of analytical results in a given matrix and are expressed as relative percent difference (RPD). Values which are less than five times the reporting limit for any individual parameter are evaluated by utilizing the absolute difference between the values; although the RPD value will be provided in the report.

Terms

Analytical Method: Both the document from which the method originates and the analytical reference method. (Example: EPA 8260B is shown as 1,8260B.) The codes for the reference method documents are provided in the References section of the Addendum.

Data Qualifiers

A - Spectra identified as "Aldol Condensation Product".

B - The analyte was detected above the reporting limit in the associated method blank. Flag only applies to associated field samples that have detectable concentrations of the analyte at less than five times (5x) the concentration found in the blank. For MCP-related projects, flag only applies to associated field samples that have detectable concentrations of the analyte at less than ten times (10x) the concentration found in the blank. For DOD-related projects, flag only applies to associated field samples that have detectable concentrations of the analyte at less than ten times (10x) the concentration found in the blank AND the analyte was detected above one-half the reporting limit (or above the reporting limit for common lab contaminants) in the associated method blank.

D - Concentration of analyte was quantified from diluted analysis. Flag only applies to field samples that have detectable concentrations of the analyte.

E - Concentration of analyte exceeds the range of the calibration curve and/or linear range of the instrument.

H - The analysis of pH was performed beyond the regulatory-required holding time of 15 minutes from the time of sample collection.

I - The RPD between the results for the two columns exceeds the method-specified criteria; however, the lower value has been reported due to obvious interference.

P - The RPD between the results for the two columns exceeds the method-specified criteria.

Q - The quality control sample exceeds the associated acceptance criteria. Note: This flag is not applicable for matrix spike recoveries when the sample concentration is greater than 4x the spike added or for batch duplicate RPD when the sample concentrations are less than 5x the RL. (Metals only.)

R - Analytical results are from sample re-analysis.

Report Format: Data Usability Report

Project Name:	Not Specified	**Lab Number:**	L1013586
Project Number:	Not Specified	**Report Date:**	09/17/10

Data Qualifiers

RE - Analytical results are from sample re-extraction.

J - Estimated value. This represents an estimated concentration for Tentatively Identified Compounds (TICs).

ND - Not detected at the reporting limit (RL) for the sample.

Report Format: Data Usability Report

Project Name: Not Specified
Project Number: Not Specified
Lab Number: L1013586
Report Date: 09/17/10

REFERENCES

1 Test Methods for Evaluating Solid Waste: Physical/Chemical Methods. EPA SW-846. Third Edition. Updates I - IIIA, 1997.

30 Standard Methods for the Examination of Water and Wastewater. APHA-AWWA-WPCF. 18th Edition. 1992.

LIMITATION OF LIABILITIES

Alpha Analytical performs services with reasonable care and diligence normal to the analytical testing laboratory industry. In the event of an error, the sole and exclusive responsibility of Alpha Analytical shall be to re-perform the work at it's own expense. In no event shall Alpha Analytical be held liable for any incidental, consequential or special damages, including but not limited to, damages in any way connected with the use of, interpretation of, information or analysis provided by Alpha Analytical.

We strongly urge our clients to comply with EPA protocol regarding sample volume, preservation, cooling, containers, sampling procedures, holding time and splitting of samples in the field.

Certificate/Approval Program Summary

Last revised July 19, 2010 - Westboro Facility

The following list includes only those analytes/methods for which certification/approval is currently held.
For a complete listing of analytes for the referenced methods, please contact your Alpha Customer Service Representative.

Connecticut Department of Public Health Certificate/Lab ID: PH-0574. ***NELAP Accredited Solid Waste/Soil.***

Drinking Water (Inorganic Parameters: Color, pH, Turbidity, Conductivity, Alkalinity, Chloride, Free Residual Chlorine, Fluoride, Calcium Hardness, Sulfate, Nitrate, Nitrite, Aluminum, Antimony, Arsenic, Barium, Beryllium, Cadmium, Calcium, Chromium, Copper, Iron, Lead, Magnesium, Manganese, Mercury, Molybdenum, Nickel, Potassium, Selenium, Silver, Sodium, Thallium, Vanadium, Zinc, Total Dissolved Solids, Total Organic Carbon, Total Cyanide, Perchlorate. Organic Parameters: Volatile Organics 524.2, Total Trihalomethanes 524.2, 1,2-Dibromo-3-chloropropane (DBCP), Ethylene Dibromide (EDB), 1,4-Dioxane (Mod 8270). Microbiology Parameters: Total Coliform-MF mEndo (SM9222B), Total Coliform – Colilert (SM9223 P/A), E. Coli. – Colilert (SM9223 P/A), HPC – Pour Plate (SM9215B), Fecal Coliform – MF m-FC (SM9222D))
Wastewater/Non-Potable Water (Inorganic Parameters: Color, pH, Conductivity, Acidity, Alkalinity, Chloride, Total Residual Chlorine, Fluoride, Total Hardness, Silica, Sulfate, Sulfide, Ammonia, Kjeldahl Nitrogen, Nitrate, Nitrite, O-Phosphate, Total Phosphorus, Aluminum, Antimony, Arsenic, Barium, Beryllium, Boron, Cadmium, Calcium, Chromium, Hexavalent Chromium, Cobalt, Copper, Iron, Lead, Magnesium, Manganese, Mercury, Molybdenum, Nickel, Potassium, Selenium, Silver, Sodium, Strontium, Thallium, Tin, Titanium, Vanadium, Zinc, Total Residue (Solids), Total Dissolved Solids, Total Suspended Solids (non-filterable), BOD, CBOD, COD, TOC, Total Cyanide, Phenolics, Foaming Agents (MBAS), Bromide, Oil and Grease. Organic Parameters: PCBs, Organochlorine Pesticides, Technical Chlordane, Toxaphene, 2,4-D, 2,4,5-T, 2,4,5-TP(Silvex), Acid Extractables (Phenols), Benzidines, Phthalate Esters, Nitrosamines, Nitroaromatics & Isophorone, Polynuclear Aromatic Hydrocarbons, Haloethers, Chlorinated Hydrocarbons, Volatile Organics, TPH (HEM/SGT), Extractable Petroleum Hydrocarbons (ETPH), MA-EPH, MA-VPH. Microbiology Parameters: Total Coliform – MF mEndo (SM9222B), Total Coliform – MTF (SM9221B), HPC – Pour Plate (SM9215B), Fecal Coliform – MF m-FC (SM9222D), Fecal Coliform – A-1 Broth (SM9221E).)
Solid Waste/Soil (Inorganic Parameters: pH, Sulfide, Aluminum, Antimony, Arsenic, Barium, Beryllium, Boron, Cadmium, Calcium, Chromium, Hexavalent Chromium, Cobalt, Copper, Iron, Lead, Magnesium, Manganese, Mercury, Molybdenum, Nickel, Potassium, Selenium, Silver, Sodium, Thallium, Tin, Vanadium, Zinc, Total Cyanide, Ignitability, Phenolics, Corrosivity, TCLP Leach (1311), SPLP Leach (1312 metals only), Reactivity. Organic Parameters: PCBs, PCBs in Oil, Organochlorine Pesticides, Technical Chlordane, Toxaphene, Extractable Petroleum Hydrocarbons (ETPH), MA-EPH, MA-VPH, Dicamba, 2,4-D, 2,4,5-T, 2,4,5-TP(Silvex), Volatile Organics, Acid Extractables (Phenols), 3.3'-Dichlorobenzidine, Phthalates, Nitrosamines, Nitroaromatics & Cyclic Ketones, PAHs, Haloethers, Chlorinated Hydrocarbons.)

Maine Department of Human Services Certificate/Lab ID: 2009024.
Drinking Water (Inorganic Parameters: SM9215B, 9222D, 9223B, EPA 180.1, 300.0, 353.2, SM2130B, 2320B, 4500Cl-D, 4500CN-C, 4500CN-E, 4500F-C, 4500H+B, 4500NO3-F, EPA 200.7, EPA 200.8, 245.1, EPA 300.0. Organic Parameters: 504.1, 524.2.)
Wastewater/Non-Potable Water (Inorganic Parameters: EPA 120.1, 1664A, 350.1, 351.1, 353.2, 410.4, 420.1, Lachat 10-107-06-1-B, SM2320B, 2340B, 2510B, 2540C, 2540D, 426C, 4500Cl-D, 4500Cl-E, 4500CN-C, 4500CN-E, 4500F-B, 4500F-C, 4500H+B, 4500Norg-B, 4500Norg-C, 4500NH3-B, 4500NH3-G, 4500NH3-H, 4500NO3-F, 4500P-B.5, 4500P-E, 5210B, 5220D, 5310C, EPA 200.7, 200.8, 245.1. Organic Parameters: 608, 624, ME DRO, ME GRO, MA EPH, MA VPH.)
*Solid Waste/Soil (*Organic Parameters: ME DRO, ME GRO, MA EPH, MA VPH.)

Massachusetts Department of Environmental Protection Certificate/Lab ID: M-MA086.
Drinking Water
Inorganic Parameters: (EPA 200.8 for: Sb,As,Ba,Be,Cd,Cr,Cu,Pb,Ni,Se,Tl)
(EPA 200.7 for: Ba,Be,Ca,Cd,Cr,Cu,Na,Ni) 245.1, (300.0 for: Nitrate-N, Fluoride, Sulfate)
353.2 for: Nitrate-N, Nitrite-N; SM4500NO3-F, 4500F-C, 4500CN-CE, EPA 180.1, SM2130B, SM4500Cl-D, 2320B, SM2540C, SM4500H-B.
Organic Parameters: (EPA 524.2 for: Trihalomethanes, Volatile Organics)
(504.1 for: 1,2-Dibromoethane, 1,2-Dibromo-3-Chloropropane), 314.0, 332.
Microbiology Parameters: SM9215B; ENZ. SUB. SM9223; MF-SM9222D
Non-Potable Water
Inorganic Parameters:, (EPA 200.8 for: Al,Sb,As,Be,Cd,Cr,Cu,Pb,Mn,Ni,Se,Ag,Tl,Zn)
(EPA 200.7 for: Al,Sb,As,Be,Cd,Cr,Co,Cu,Fe,Pb,Mn,Mo,Ni,Se,Ag,Sr,Ti,Tl, V,Zn,Ca,Mg,Na,K)
245.1, SM4500H,B, EPA 120.1, SM2510B, 2540C, 2540B, 2340B, 2320B, 4500CL-E, 4500F-BC, 426C, SM4500NH3-BH, (EPA 350.1 for: Ammonia-N), LACHAT 10-107-06-1-B for Ammonia-N, SM4500NO3-F, 353.2 for Nitrate-N, SM4500NH3-B,C-Titr, SM4500NH3-BC-NES, EPA 351.1, SM4500P-E, 4500P-B,E, 5220D, EPA 410.4, SM 5210B, 5310C, 4500CL-D, EPA 1664, SM14 510AC, EPA 420, SM4500-CN-CE, SM2540D.
Organic Parameters: (EPA 624 for Volatile Halocarbons, Volatile Aromatics)

(608 for: Chlordane, Aldrin, Dieldrin, DDD, DDE, DDT, Heptachlor, Heptachlor Epoxide, PCBs-Water), EPA 625 for SVOC Acid Extractables and SVOC Base/Neutral Extractables, 600/4-81-045-PCB-Oil

New Hampshire Department of Environmental Services Certificate/Lab ID: 200307. ***NELAP Accredited.***
Drinking Water (Inorganic Parameters: SM6215B, 9222B, 9223B Colilert, EPA 200.7, 200.8, 245.2, 120.1, 300.0, 314.0, SM4500CN-E, 4500H+B, 4500NO3-F, 2320B, 2510B, 2540C, 4500F-C, 5310C, 2120B, EPA 331.0. Organic Parameters: 504.1, 524.2, SM6251B.)
Non-Potable Water (Inorganic Parameters: SM9222D, 9221B, 9222B, 9221E-EC, EPA 200.7, 200.8, 245.1, 245.2, SW-846 6010B, 6020, 7196A, 7470A, SM3500-CR-D, EPA 120.1, 300.0, 350.1, 351.1, 353.2, 420.1, 1664A, SW-846 9010, 9030, 9040B, SM426C, SM2310B, 2540B, 2540D, 4500H+B, 4500NH3-H, 4500NH3-E, 4500NO2-B, 4500P-E, 4500-S2-D, 5210B, 2320B, 2540C, 4500F-C, 5310C, 5540C, LACHAT 10-117-07-1-B, LACHAT 10-107-06-1-B, LACHAT 10-107-04-1-C, LACHAT 10-107-04-1-J, LACHAT 10-117-07-1-A, SM4500CL-E, LACHAT 10-204-00-1-A, LACHAT 10-107-06-2-D. Organic Parameters: SW-846 3005A, 3015A, 3510C, 5030B, 8021B, 8260B, 8270C, 8330, EPA 624, 625, 608, SW-846 8082, 8081A.)
Solid & Chemical Materials (Inorganic Parameters: SW-846 6010B, 7196A, 7471A, 7.3.3.2, 7.3.4.2, 1010, 1030, 9010, 9012A, 9014, 9030B, 9040, 9045C, 9050C, 1311, 3005A, 3050B, 3051A. Organic Parameters: SW-846 3540C, 3545, 3580A, 5030B, 5035, 8021B, 8260B, 8270C, 8330, 8151A, 8082, 8081A.)

New Jersey Department of Environmental Protection Certificate/Lab ID: MA935. ***NELAP Accredited.***
Drinking Water (Inorganic Parameters: SM9222B, 9221E, 9223B, 9215B, 4500NO3-F, 4500F-C, EPA 300.0, 200.7, 2540C, 2320B, 314.0, SM2120B, 2510B, 5310C, SM4500H-B, EPA 200.8, 245.2. Organic Parameters: 504.1, SM6251B, 524.2.)
Non-Potable Water (Inorganic Parameters: SM5210B, EPA 410.4, SM5220D, 4500Cl-D, EPA 300.0, SM2120B, SM4500F-BC, EPA 200.7, 351.1, LACHAT 10-107-06-2-D, EPA 353.2, SM4500NO3-F, 4500NO2-B, EPA 1664A, SM5310B, C or D, 4500-PE, EPA 420.1, SM4500P-B5+E, 2540B, 2540C, 2540D, EPA 120.1, SM2510B, SM15 426C, SM9221CE, 9222D, 9221B, 9222B, 9215B, 2310B, 2320B, 4500NH3-H, 4500-S D, EPA 350.1, SM5210B, SW-846 3015, 6020, 7470A, 5540C, 4500H-B, EPA 200.8, SM3500Cr-D, EPA 245.1, 245.2, SW-846 9040B, 3005A, EPA 6010B, 7196A, SW-846 9010B, 9030B. Organic Parameters: SW-846 8260B, 8270C, 3510C, EPA 608, 624, 625, SW-846 5030B, 8021B, 8081A, 8082, 8151A, 8330, NJ OQA-QAM-025 Rev.7.)
Solid & Chemical Materials (Inorganic Parameters: SW-846 9040B, 3005A, 6010B, 7196A, 5030B, 9010B, 9030B, 1030, 1311, 3050B, 3051, 7471A, 9014, 9012A, 9045C, 9050A, 9065. Organic Parameters: SW-846 8021B, 8081A, 8082, 8151A, 8330, 8260B, 8270C, 1311, 1312, 3540C, 3545, 3550B, 3580A, 5035L, 5035H, NJ OQA-QAM-025 Rev.7.)

New York Department of Health Certificate/Lab ID: 11148. ***NELAP Accredited.***
Drinking Water (Inorganic Parameters: SM9223B, 9222B, 9215B, EPA 200.8, 200.7, 245.2, SM5310C, EPA 314.0, 332.0, SM2320B, EPA 300.0, SM2120B, 4500CN-E, 4500F-C, 4500H-B, 4500NO3-F, 2540C, EPA 120.1, SM 2510B. Organic Parameters: EPA 524.2, 504.1.)
Non-Potable Water (Inorganic Parameters: SM9221E, 9222D, 9221B, 9222B, 9215B, 5210B, EPA 410.4, SM5220D, 2310B-4a, 2320B, EPA 200.7, 300.0, LACHAT 10-117-07-1A or B, SM4500Cl-E, 4500F-C, SM15 426C, EPA 350.1, LACHAT 10-107-06-1-B, SM4500NH3-H, EPA 351.1, LACHAT 10-107-06-2, EPA 353.2, LACHAT 10-107-041-C, SM4500-NO3-F, 4500-NO2-B, 4500P-E, 2540C, 2540B, 2540D, EPA 200.8, EPA 6010B, 6020, EPA 7196A, S\M3500Cr-D, EPA 245.1, 245.2, 7470A, SM2120B, SM4500-CN-E LACHAT 10-204-00-1-A, EPA 9040B, SM4500-HB, EPA 1664A, SM5310C, EPA 420.1, SM14 510C, EPA 120.1, SM2510B, SM4500S-D, SM5540C, EPA 3005A, 3015. Organic Parameters: EPA 624, 8260B, 8270C, 625, 608, 8081A, 8151A, 8330, 8082, EPA 3510C, 5030B, 9010B, 9030B.)
Solid & Hazardous Waste (Inorganic Parameters: 1010, 1030, SW-846 Ch 7 Sec 7.3, EPA 6010B, 7196A, 7471A, 9012A, 9014, 9040B, 9045C, 9065, 9050, EPA 1311, 1312, 3005A, 3050B, 9010B, 9030B. Organic Parameters: EPA 8260B, 8270C, 8081A, 8151A, 8330, 8082, 3540C, 3545, 3546, 3580, 5030B, 5035.)

North Carolina Department of the Environment and Natural Resources Certificate/Lab ID : 666. Organic Parameters: MA-EPH, MA-VPH.

Pennsylvania Department of Environmental Protection Certificate/Lab ID : 68-03671. ***NELAP Accredited.***
Non-Potable Water (Organic Parameters: EPA 3510C, 5030B, 625, 624. 608, 8081A, 8082, 8151A, 8260B, 8270C, 8330)
Solid & Hazardous Waste (Inorganic Parameters: EPA 1010, 1030, 1311, 3050B, 3051, 6010B, EPA 7.3.3.2, EPA 7.3.4.2, 7196A, 7471A, 9010B, 9012A, 9014, 9040B, 9045C, 9050, 9065. Organic Parameters: 3540C, 3545, 3580A, 5035, 8021B, 8081A, 8082, 8151A, 8260B, 8270C, 8330)

Rhode Island Department of Health Certificate/Lab ID: LAO00065. ***NELAP Accredited via NY-DOH.***
Refer to MA-DEP Certificate for Potable and Non-Potable Water.
Refer to NY-DOH Certificate for Potable and Non-Potable Water.

Texas Commisson on Environmental Quality Certificate/Lab ID: T104704476-09-1. ***NELAP Accredited.***
Non-Potable Water (Inorganic Parameters: EPA 120.1, 1664, 200.7, 200.8, 245.1, 245.2, 300.0, 350.1, 351.1, 353.2, 376.2, 410.4, 420.1, 6010, 6020, 7196, 7470, 9040, SM 2120B, 2310B, 2320B, 2510B, 2540B, 2540C, 2540D, 426C, 4500CL-E, 4500CN-E, 4500F-C, 4500H+B, 4500NH3-H, 4500NO2B, 4500P-E, 4500 S2¯D, 510C, 5210B, 5220D, 5310C, 5540C. Organic Parameters: EPA 608, 624, 625, 8081, 8082, 8151, 8260, 8270, 8330.)

Solid & Hazardous Waste (Inorganic Parameters: EPA 1311, 1312, 9012, 9014, 9040, 9045, 9050, 9065.)

Department of Defense Certificate/Lab ID: L2217.
Drinking Water (Inorganic Parameters: SM 4500H-B. Organic Parameters: EPA 524.2, 504.1.)

Non-Potable Water (Inorganic Parameters: EPA 200.7, 200.8, 6010B, 6020, 245.1, 245.2, 7470A, 9040B, 300.0, 9251, 9038, 350.1, 353.2, 351.1, 120.1, 9050A , 410.4, 9060, 1664, 420.1, LACHAT 10-107-06-1-B, SM 4500CN-E, 4500H-B, 4500CL-E, 4500F-BC, 4500SO4-E, 426C, 4500NH3-B, 4500NH3-H, 4500NO3-F, 4500NO2-B, 4500Norg-C, 4500PE, 2510B, 5540C, 5220D, 5310C, 2540B, 2540C, 2540D, 510C, 4500S2-AD, 3005A, 3015, 9010B, 9030B. Organic Parameters: EPA 8260B, 8270C, 8330, 625, 8082, 8151A, 8081A, 3510C, 5030B, MassDEP EPH, MassDEP VPH.)

Solid & Hazardous Waste (Inorganic Parameters: EPA 200.7, 6010B, 7471A, 9040B, 9045C, 9065, 420.1, 9012A, 6860, 1311, 1312, 3050B, 9030B, 3051, 9010B, 3540C, SM 510ABC, 4500CN-CE, 2540G, SW-846 7.3, Organic Parameters: EPA 8260B, 8270C, 8330, 8082, 8081A, 8151A, 3545, 3546, 3580, 5035, MassDEP EPH, MassDEP VPH.)

Analytes Not Accredited by NELAP
Certification is not available by NELAP for the following analytes: **EPA 8260B:** Freon-113, 1,2,4,5-Tetramethylbenzene, 4-Ethyltoluene. **EPA 8330A:** PETN, Picric Acid, Nitroglycerine, 2,6-DANT, 2,4-DANT. **EPA 8270C:** Methyl naphthalene, Dimethyl naphthalene, Total Methylnapthalenes, Total Dimethylnaphthalenes, 1,4-Diphenylhydrazine (Azobenzene). **EPA 625:** 4-Chloroaniline. **EPA 350.1** for Ammonia in a Soil matrix.

Certificate/Approval Program Summary

Last revised July 19, 2010 – Mansfield Facility

The following list includes only those analytes/methods for which certification/approval is currently held.
For a complete listing of analytes for the referenced methods, please contact your Alpha Customer Service Representative.

Connecticut Department of Public Health Certificate/Lab ID: PH-0141.

Wastewater/Non-Potable Water (Inorganic Parameters: pH, Turbidity, Conductivity, Alkalinity, Aluminum, Antimony, Arsenic, Barium, Beryllium, Boron, Cadmium, Calcium, Chromium, Cobalt, Copper, Iron, Lead, Magnesium, Manganese, Mercury, Molybdenum, Nickel, Potassium, Selenium, Silver, Sodium, Strontium, Thallium, Tin, Vanadium, Zinc, Total Residue (Solids), Total Suspended Solids (non-filterable), Total Cyanide. Organic Parameters: PCBs, Organochlorine Pesticides, Technical Chlordane, Toxaphene, Acid Extractables, Benzidines, Phthalate Esters, Nitrosamines, Nitroaromatics & Isophorone, PAHs, Haloethers, Chlorinated Hydrocarbons, Volatile Organics.)

Solid Waste/Soil (Inorganic Parameters: pH, Aluminum, Antimony, Arsenic, Barium, Beryllium, Cadmium, Calcium, Chromium, Hexavalent Chromium, Cobalt, Copper, Iron, Lead, Magnesium, Manganese, Mercury, Molybdenum, Nickel, Potassium, Selenium, Silver, Sodium, Thallium, Vanadium, Zinc, Total Organic Carbon, Total Cyanide, Corrosivity, TCLP 1311. Organic Parameters: PCBs, Organochlorine Pesticides, Technical Chlordane, Toxaphene, Volatile Organics, Acid Extractables, Benzidines, Phthalates, Nitrosamines, Nitroaromatics & Cyclic Ketones, PAHs, Haloethers, Chlorinated Hydrocarbons.)

Florida Department of Health Certificate/Lab ID: E87814. ***NELAP Accredited.***

Non-Potable Water (Inorganic Parameters: SM2320B, EPA 120.1, SM2510B, EPA 245.1, EPA 150.1, EPA 160.2, SM2540D, EPA 335.2, SM2540G, EPA 180.1. Organic Parameters: EPA 625, 608.)

Solid & Chemical Materials (Inorganic Parameters: 6020, 7470, 7471, 9045, 9014. Organic Parameters: EPA 8260, 8270, 8082, 8081.)

Air & Emissions (EPA TO-15.)

Louisiana Department of Environmental Quality Certificate/Lab ID: 03090. ***NELAP Accredited.***

Non-Potable Water (Inorganic Parameters: EPA 120.1, 150.1, 160.2, 180.1, 200.8, 245.1, 310.1, 335.2, 608, 625, 1631, 3010, 3015, 3020, 6020, 9010, 9014, 9040, SM2320B, 2510B, 2540D, 2540G, 4500CN-E, 4500H-B, Organic Parameters: EPA 3510, 3580, 3630, 3640, 3660, 3665, 5030, 8015 (mod), 3570, 8081, 8082, 8260, 8270,)

Solid & Chemical Materials (Inorganic Parameters: 6020, 7196, 7470, 7471, 7474, 9010, 9014, 9040, 9045, 9060. Organic Parameters: EPA 8015 (mod), EPA 3570, 1311, 3050, 3051, 3060, 3580, 3630, 3640, 3660, 3665, 5035, 8081, 8082, 8260, 8270.)

Biological Tissue (Inorganic Parameters: EPA 6020. Organic Parameters: EPA 3570, 3510, 3610, 3630, 3640, 8270.)

Massachusetts Department of Environmental Protection Certificate/Lab ID: M-MA030.

Non-Potable Water (Inorganic Parameters: SM4500H+B. Organic Parameters: EPA 624.)

New Hampshire Department of Environmental Services Certificate/Lab ID: 2206. ***NELAP Accredited.***

Non-Potable Water (Inorganic Parameters: EPA 200.8, 245.1, 1631E, 120.1, 150.1, 180.1, 310.1, 335.2, 160.2, SM2540D, 2540G, 4500CN-E, 4500H+B, 2320B, 2510B. Organic Parameters: EPA 625, 608.)

New Jersey Department of Environmental Protection Certificate/Lab ID: MA015. ***NELAP Accredited.***

Non-Potable Water (Inorganic Parameters: SW-846 1312, 3010, 3020A, 3015, 6020, SM2320B, EPA 200.8, SM2540C, 2540D, 2540G, EPA 120.1, SM2510B, EPA 180.1, 245.1, 1631E, SW-846 9040B, 6020, 9010B, 9014 Organic Parameters: EPA 608, 625, SW-846 3510C, 3580A, 5030B, 3035L, 5035H, 3630C, 3640A, 3660B, 3665A, 8081A, 8082 8260B, 8270C)

Solid & Chemical Materials (Inorganic Parameters: SW-846 6020, 9010B, 9014, 1311, 1312, 3050B, 3051, 3060A, 7196A, 7470A, 7471A, 9045C, 9060. Organic Parameters: SW-846 3580A, 5030B, 3035L, 5035H, 3630C, 3640A, 3660B, 3665A, 8081A, 8082, 8260B, 8270C, 3570, 8015B.)

Atmospheric Organic Parameters (EPA TO-15)

Biological Tissue (Inorganic Parameters: SW-846 6020 Organic Parameters: SW-846 8270C, 3510C, 3570, 3610B, 3630C, 3640A)

New York Department of Health Certificate/Lab ID: 11627. ***NELAP Accredited.***

Non-Potable Water (Inorganic Parameters: EPA 310.1, SM2320B, EPA 365.2, 160.1, EPA 160.2, SM2540D, EPA 200.8, 6020, 1631E, 245.1, 335.2, 9014, 150.1, 9040B, 120.1, SM2510B, EPA 376.2, 180.1, 9010B. Organic Parameters: EPA 624, 8260B, 8270C, 608, 8081A, 625, 8082, 3510C, 3511, 5030B.)

Solid & Hazardous Waste (Inorganic Parameters: EPA 9040B, 9045C, SW-846 Ch7 Sec 7.3, EPA 6020, 7196A, 7471A, 7474, 9014, 9040B, 9045C, 9010B. Organic Parameters: EPA 8260B, 8270C, 8081A, DRO 8015B, 8082, 1311, 3050B, 3580, 3050B, 3035, 3570, 3051, 5035, 5030B.)

Air & Emissions (EPA TO-15.)

Rhode Island Department of Health Certificate/Lab ID: LAO00299. ***NELAP Accredited via LA-DEQ.***

Refer to MA-DEP Certificate for Non-Potable Water.

Refer to LA-DEQ Certificate for Non-Potable Water.

Texas Commission of Environmental Quality Certificate/Lab ID: T104704419-08-TX. ***NELAP Accredited.***

Solid & Chemical Materials (Inorganic Parameters: EPA 6020, 7470, 7471, 1311, 7196, 9014, 9040, 9045, 9060. Organic Parameters: EPA 8015, 8270, 8260, 8081, 8082.)

Air (Organic Parameters: EPA TO-15)

U.S. Army Corps of Engineers

Department of Defense Certificate/Lab ID: L2217.01.

Solid & Hazardous Waste (Inorganic Parameters: EPA 1311, 1312,3051, 6020, 747A, 7474, 9045C,9060, SM 2540G, ASTM D422-63. Organic Parameters: EPA 3580, 3570, 3540C, 5035, 8260B, 8270C, 8270 Alk-PAH, 8082, 8081A, 8015 (SHC), 8015 (DRO).

Air & Emissions (EPA TO-15.)

Analytes Not Accredited by NELAP
Certification is not available by NELAP for the following analytes: **8270C:** Biphenyl.

SUBCONTRACT ORDER ALPHA Job # L1013586

Con-Test Analytical Laboratory

10I0004

SENDING LABORATORY:

Con-Test Analytical Laboratory
39 Spruce Street
East Longmeadow, MA 01028
Phone: 413.525.2332
Fax: 413.525.6405
Project Manager: Meghan E. Kelley

RECEIVING LABORATORY:

Alpha Analytical Laboratory
8 Walkup Drive
Westborough, MA 01581
Phone :(508) 898-9220
Fax: (508) 898-9193

Analysis	Due	Expires	Laboratory ID	Comments
Sample ID: 10I0004-02	**Soil**	**Sampled:08/30/10 14:45**		
Total Organic Carbon Soil	09/07/10 23:59	09/13/10 14:45		
Containers Supplied:				
8 oz clear glass (E)				

Released By	Date	Received By	Date
[signature]	9-2-10 0901	[signature]	9/2/10 0901

SUBCONTRACT ORDER ALPHA Job # L1013586

Con-Test Analytical Laboratory

10I0004

SENDING LABORATORY:

Con-Test Analytical Laboratory
39 Spruce Street
East Longmeadow, MA 01028
Phone: 413.525.2332
Fax: 413.525.6405
Project Manager: Meghan E. Kelley

RECEIVING LABORATORY:

Alpha Analytical Laboratory
8 Walkup Drive
Westborough, MA 01581
Phone :(508) 898-9220
Fax: (508) 898-9193

Analysis	Due	Expires	Laboratory ID	Comments
Sample ID: 10I0004-02	**Soil**	**Sampled:08/30/10 14:45**	[redacted]	
Total Organic Carbon Soil	09/07/10 23:59	09/13/10 14:45		
Containers Supplied:				
8 oz clear glass (E)				

Released By	Date	Received By	Date
[signature]	9-2-10 0901	[signature]	9/2/10 0901
[signature]	9/	P. Gilbert	9-2-10 17:30
P. Gilbert	9/2/10 18:20	[signature]	9/2/10 19:00

MADEP MCP Analytical Method Report Certification Form

Laboratory Name: Con-Test Analytical Laboratory	Project #: 10I0004
Project Location: City of New Bedford	RTN:

This Form provides certifications for the following data set: [list Laboratory Sample ID Number(s)]

10I0004-01 thru 10I0004-03

Matrices: Product/Solid Soil

CAM Protocol (check all that below)

8260 VOC CAM II A (X)	7470/7471 Hg CAM IIIB ( )	MassDEP VPH CAM IV A ( )	8081 Pesticides CAM V B ( )	7196 Hex Cr CAM VI B ( )	MassDEP APH CAM IX A ( )
8270 SVOC CAM II B ( )	7010 Metals CAM III C ( )	MassDEP EPH CAM IV A ( )	8151 Herbicides CAM V C ( )	8330 Explosives CAM VIII A ( )	TO-15 VOC CAM IX B ( )
6010 Metals CAM III A ( )	6020 Metals CAM III D ( )	8082 PCB CAM V A ( )	9014 Total Cyanide/PAC CAM VI A ( )	6860 Perchlorate CAM VIII B ( )	

Affirmative response to Questions A throughF is required for "Presumptive Certainty" status

A	Were all samples received in a condition consistent with those described on the Chain-of-Custody, properly preserved (including temperature) in the field or laboratory, and prepared/analyzed within method holding times?	☑ Yes	☐ No[1]
B	Were the analytical method(s) and all associated QC requirements specificed in the selected CAM protocol(s) followed?	☑ Yes	☐ No[1]
C	Were all required corrective actions and analytical response actions specified in the selected CAM protocol(s) implemented for all identified performance standard non-conformances?	☑ Yes	☐ No[1]
D	Does the laboratory report comply with all the reporting requirements specified in CAM VII A, Quality Assurance and Quality Control Guidlines for the Acquisition and Reporting of Analytical Data?	☑ Yes	☐ No[1]
E a	VPH, EPH, and APH Methods only: Was each method conducted without significant modification(s)? (Refer to the individual method(s) for a list of significant modifications).	☐ Yes	☐ No[1]
E b	APH and TO-15 Methods only: Was the complete analyte list reported for each method?	☐ Yes	☐ No[1]
F	Were all applicable CAM protocol QC and performance standard non-conformances identified and evaluated in a laboratory narrative (including all No responses to Qestions A through E)?	☑ Yes	☐ No[1]

A response to questions G, H and I below is required for "Presumptive Certainty" status

G	Were the reporting limits at or below all CAM reporting limits specified in the selected CAM protocol(s)?	☐ Yes	☑ No[1]

***Data User Note:* Data that achieve "Presumptive Certainty" status may not necessarily meet the data usability and representativeness requirements described in 310 CMR 40. 1056 (2)(k) and WSC-07-350.**

H	Were all QC perfomance standards specified in the CAM protocol(s) achieved?	☐ Yes	☑ No[1]
I	Were results reported for the complete analyte list specified in the selected CAM protocol(s)?	☑ Yes	☐ No[1]

[1] *All Negative responses must be addressed in an attached Environmental Laboratory case narrative.*

I, the undersigned, attest under the pains and penalties of perjury that, based upon my personal inquiry of those responsible for obtaining the information, the material contained in this analytical report is, to the best of my knowledge and belief, accurate and complete.

Signature: _____ Position: Laboratory Manager

Printed Name: Daren J. Damboragian Date: 09/20/10

APPENDIX B

UPDATED IMMINENT HAZARD SCREENING EVALUATION

UPDATED IMMINENT HAZARD SCREENING EVALUATION
INDOOR AIR
NEW BEDFORD HIGH SCHOOL
NEW BEDFORD, MASSACHUSETTS

An Imminent Hazard Screening Evaluation was conducted in March 2010 and submitted as part of the March 22, 2010 Immediate Response Action (IRA) Plan for the New Bedford High School (NBHS) campus to determine whether data collected to evaluate the January 2010 Substantial Release Migration and Critical Exposure Pathway conditions indicated that an Imminent Hazard (IH) condition existed at the NBHS building. The Imminent Hazard Screening Evaluation was updated in May 2010 and submitted as part of the May 24, 2010 IRA Status Report. Both the March and May 2010 Imminent Hazard Screening Evaluations concluded that the measured indoor air concentrations are not associated with an IH condition. This conclusion is based on the indoor air sampling conducted in January and April 2010. The evaluations further concluded that chronic indoor air exposure is associated with a condition of No Significant Risk for workers. To assist in distinguishing the contribution of vapor intrusion to the measured indoor air concentrations, the May 2010 evaluation also included fate and transport modeling of soil gas to indoor air concentrations conducted for the Lecture Room (TRC-IA-15) and Classroom A-3-112 that indicated that only a small fraction of the measured indoor air concentrations are likely to be associated with a complete vapor intrusion pathway.

As part of the continuing IRA, additional groundwater and indoor air sampling were conducted within and in the vicinity of the NBHS building between August and October 2010. This Updated Imminent Hazard Screening Evaluation evaluates the applicable supplemental data collected to determine whether the conclusions of the March and May 2010 Imminent Hazard Screening Evaluations continue to be accurate as stated. Presented as part of this Updated Imminent Hazard Screening Evaluation are risk and hazard calculations for the location-specific indoor air sampling data collected to date.

Supplemental Data Collection

Between August 24 and August 30, 2010, TRC installed five (5) shallow and two (2) deep overburden monitoring wells throughout the NBHS campus. Shallow monitoring wells MW-25 and MW-26 were installed along Parker Street in the vicinity of the flagpole island. Shallow monitoring wells MW-27 through MW-29 were installed within the Mechanical Room and downgradient pipe tunnel. Deeper monitoring wells MW-5D and MW-7D were installed in the vicinity of the Mechanical Room and flagpole island, respectively. Concurrently, TRC sampled the newly installed wells and ten (10) existing TRC wells for VOCs for a total of seventeen (17) monitoring wells sampled during the period September 8 through September 13, 2010.

On October 13, 2010, TRC installed four (4) additional shallow overburden monitoring wells at the NBHS campus. Monitoring well MW-30 was installed east of the E-Block and monitoring wells MW-31 through MW-33 were installed within the Mechanical Room in the vicinity of monitoring wells MW-27 and MW-28. TRC collected samples from the newly installed

monitoring wells and four (4) existing monitoring wells in the vicinity of the Mechanical Room and flagpole island for VOC analysis on October 21 and 22, 2010.

On August 24, 2010, TRC collected three (3) indoor air samples for analysis of VOCs. Samples were collected when the NBHS HVAC system was not in operation. The samples were collected from the following bottom floor interior locations at NBHS:

- Classroom (A-3-112) – Sample designation IA-1 (duplicate analysis performed)
- Mechanical Room (B-114) – Sample designation IA-2
- Lecture Room (D-120) – Sample designation IA-3

No supplemental soil gas samples were collected as part of investigation activities conducted since the May 2010 IRA Status Report.

Indoor Air Evaluation

In general, indoor air may be impacted by many types of potential sources, where present, including VOCs in shallow groundwater and subslab soil gas via vapor intrusion, the indoor use of VOC containing products and equipment, off-gassing from building materials and furnishings, and outdoor air quality. A determination as to whether a vapor intrusion pathway is complete and, if complete, which compounds detected in indoor air are present as a result of vapor intrusion needs to consider:

- The identity and concentration of VOCs in shallow groundwater in close proximity to the NBHS building and in soil gas beneath the slab of the NBHS building to determine those VOCs with a high likelihood of being potentially present in indoor air as a result of vapor intrusion;

- The spatial distribution of VOCs in indoor air relative to detections of VOCs in groundwater and soil gas to assist in determining whether their presence is more likely related to indoor sources than vapor intrusion;

- The concentrations of VOCs in upper floor spaces, as compared to bottom floor spaces, that are less likely to be impacted by vapor intrusion (to date, no sampling has been conducted in upper floor spaces); and

- The concentrations of volatile compounds in upwind outdoor air with the potential to impact indoor air quality (to date, no sampling has been conducted of outdoor air).

Shallow groundwater, soil gas and indoor air sampling data collected between January and October 2010 were compared to screening threshold values consisting of: Massachusetts Contingency Plan (MCP) Method 1 GW-2 cleanup standards for groundwater, indoor air screening levels set at a Hazard Quotient (HQ) of 0.2 and excess lifetime cancer risk (ELCR) of 1E-06, and 10-times the MassDEP Indoor Air Threshold Values (IATVs) for soil gas. If a VOC in groundwater or soil gas exceeds its screening threshold value, then there may be an increased likelihood that the VOC, if also detected in indoor air, is related to a complete vapor intrusion

pathway. If a VOC was never detected in groundwater or soil gas, but was detected in indoor air, then the finding is most likely related to an indoor vapor source other than vapor intrusion.

VOCs detected in groundwater, soil gas and indoor air are presented in Figure 1 by medium (i.e., groundwater, soil gas and indoor air). Those VOCs with concentrations above groundwater, soil gas or indoor air screening threshold values are highlighted on this figure. The comprehensive list of compounds found in groundwater and soil gas includes compounds with the potential to impact indoor air via vapor intrusion. A total of 26 VOCs were detected in indoor air. Four of the compounds (methylene chloride, methyl tert butyl ether, 1,2-dichlorethane and carbon tetrachloride) have not, to date, been detected in soil gas or groundwater and appear to be present in indoor air due to a source unrelated to vapor intrusion. Because outdoor air and indoor air data from upper floor spaces have not yet been collected, all VOCs detected in indoor air have been quantitatively evaluated in the risk evaluation. However, as more site-specific data are gathered, VOCs such as the four compounds identified by this preliminary assessment as being unrelated to a vapor intrusion source, may be eliminated in future evaluations.

Because sampling was conducted in maintenance and storage rooms, classrooms and other academic areas of the building, current receptors include maintenance workers, students, teachers and staff. Because students are only present for approximately four years, workers (including maintenance workers, teachers and other building staff) were evaluated due to their possible lengthy tenure at the school. Workers were assumed to be exposed to VOCs in indoor air for 8 hours per day, 250 days per year for 27 years. A chronic (i.e., 27 year) exposure period has been used since it is unknown how long exposures have been occurring. Should the chronic risk estimates be associated with a condition of no significant risk, it can also be concluded that there is no IH condition associated with the exposures.

Tables 1 through 3 present the risk and hazard calculations for the current receptors exposed to the measured indoor air concentrations within each of the 3 rooms sampled in August 2010. Rooms sampled in January and April 2010 and evaluated in the previous IH evaluations, but not resampled in August have not been include in this evaluation (i.e., Classroom B-116, Honors Dining Room B-106, the Cafeteria Storage Room, Classroom A-4-115, Classroom A-4-105, Classroom A-3-115, Classroom A-3-105, Classroom A-2-115, Classroom A-2-105, Classroom A-1-116, Classroom A-2-112, and Classroom A-1-110). For rooms that were sampled in January, April and August, the maximum detected concentration across the three rounds of sampling has been used to evaluate risk and hazard. The indoor air concentrations are shown on Tables 1 through 3, as well as the toxicity values used to estimate the Excess Lifetime Cancer Risk (ELCR) and Hazard Index (HI). Toxicity values (unit risks and reference concentrations) are the same as those used by the Massachusetts Department of Environmental Protection (MassDEP) in the development of the MCP Method 1 cleanup standards except for 1,3,5-trimethylbenzene, 1,2,4-trimethylbenzene, chloromethane, dichlorodifluoromethane, n-propylbenzene, and trichlorofluoromethane. For these five compounds, none of which are classified as Class A, B or C carcinogens, a reference concentration provided by EPA's Integrated Risk Information System was used for chloromethane, reference concentrations provided on EPA's Health Effects Assessment Summary Tables were used for dichlorodifluoromethane and trichlorofluoromethane, provisional reference concentrations provided by EPA's Superfund Technical Support Center was used for 1,2,4-trimethylbenzene

and n-propylbenzene, and the MassDEP RfC for C9-C10 aromatics was used for 1,3,5-trimethylbenzene.

The calculations indicated that risks and hazards are at or below the MCP Risk Limits of an excess lifetime cancer risk (ELCR) of 1E-05 and a hazard index (HI) of 1 for the three rooms evaluated. In addition, it can be further concluded that chronic indoor air exposure is associated with a condition of No Significant Risk for workers.

Table 1
Commercial Worker
Inhalation of Indoor Air Exposure Pathway
New Bedford High School - Mechanical Room B-114
New Bedford, Massachusetts

		EPC	Estimated Dose		Toxicity Values		Risk Estimates	
	Constituent	Indoor Air Concentration µg/m3	ADEcancer (Cancer) µg/m3	ADEnon-cancer (Non-cancer) µg/m3	Unit Risk per µg/m3	Chronic Noncancer Reference Concentration µg/m3	Cancer Risk (--)	Hazard Quotient (--)
78-93-3	2-Butanone	4.57E+00	4.1E-01	1.1E+00	NA	5.0E+03	NA	2.E-04
71-55-6	1,1,1-Trichloroethane	1.31E+00	1.2E-01	3.0E-01	NA	5.2E+03	NA	6.E-05
67-64-1	Acetone	7.86E+00	7.0E-01	1.8E+00	NA	8.0E+02	NA	2.E-03
71-43-2	Benzene	5.50E+00	4.9E-01	1.3E+00	7.8E-06	3.0E+01	4.E-06	4.E-02
56-23-5	Carbon tetrachloride	5.78E-01	5.1E-02	1.3E-01	1.5E-05	4.3E+02	8.E-07	3.E-04
74-87-3	Chloromethane	1.11E+00	9.9E-02	2.6E-01	NA	9.0E+01	NA	3.E-03
67-66-3	Chloroform	2.34E+00	2.1E-01	5.4E-01	2.3E-05	6.6E+02	5.E-06	8.E-04
156-59-2	cis-1,2-Dichloroethene	1.52E+01	1.3E+00	3.5E+00	NA	3.5E+01	NA	1.E-01
107-06-2	1,2-Dichloroethane	1.09E-01	9.7E-03	2.5E-02	2.6E-05	5.5E+01	3.E-07	5.E-04
75-71-8	Dichlorodifluoromethane	3.11E+00	2.8E-01	7.2E-01	NA	2.0E+02	NA	4.E-03
108-88-3	Toluene	4.20E+01	3.7E+00	9.7E+00	NA	5.0E+03	NA	2.E-03
156-60-5	trans-1,2-Dichloroethene	5.62E+00	5.0E-01	1.3E+00	NA	7.0E+01	NA	2.E-02
79-01-6	Trichloroethene	1.09E+01	9.7E-01	2.5E+00	1.7E-06	1.8E+02	2.E-06	1.E-02
75-69-4	Trichlorofluoromethane	1.82E+00	1.6E-01	4.2E-01	NA	7.0E+02	NA	6.E-04
100-41-4	Ethylbenzene	5.99E+00	5.3E-01	1.4E+00	NA	1.0E+03	NA	1.E-03
108-10-1	4-Methyl-2-pentanone	8.76E-01	7.8E-02	2.0E-01	NA	3.0E+03	NA	7.E-05
91-20-3	Naphthalene	6.81E-01	6.0E-02	1.6E-01	NA	3.0E+00	NA	5.E-02
1330-20-7	Xylenes	3.19E+01	2.8E+00	7.3E+00	NA	1.0E+02	NA	7.E-02
95-63-6	1,2,4,-Trimethylbenzene	9.04E+00	8.0E-01	2.1E+00	NA	7.0E+00	NA	3.E-01
108-67-8	1,3,5-Trimethylbenzene	2.54E+00	2.3E-01	5.8E-01	NA	5.0E+01	NA	1.E-02
103-65-1	n-Propylbenzene	1.49E+00	1.3E-01	3.4E-01	NA	1.0E+03	NA	3.E-04
75-01-4	Vinyl chloride	8.53E-01	7.6E-02	2.0E-01	8.8E-06	1.0E+02	7.E-07	2.E-03

RfC for C9-C10 aromatics used for 1,3,5-trimethylbenzene
Not detected in groundwater or soil gas
Where:

	Cancer Risk	Hazard Index
TOTAL:	1E-05	6E-01

LADEcancer = IAC x EFx ED x EP/APcancer
ADEnon-cancer = IAC x EF x ED x EP / APnon-cancer
Cancer Risk = LADEcancer x UR
Hazard Quotient = ADEnon-cancer / Inhalation Reference Concentration

Bold = Cancer Risk >1.0E-05 or Hazard Quotient > 1.0E+01

LADE = Life Time Average Daily Exposure
ADE = Average Daily Exposure
EPC = Exposure Point Concentration
$\mu g/m^3$ = micrograms per cubic meter

And where:

Exposure Frequency (EF) =	250	days/year (5 days a week for 26 weeks of exposure)
Exposure Duration (ED) =	8	hrs/day [1]
Exposure Period (EP) =	27	yr [1]
Unit Conversion (UC) =	0.042	days/hr
Averaging Period (APcancer) =	25550	days [1]
Averaging Period (APnon-cancer) =	9855	days [1]

[1] MADEP, 2006

Table 2
Commercial Worker
Inhalation of Indoor Air Exposure Pathway
New Bedford High School - Classroom A-3-112
New Bedford, Massachusetts

		EPC	Estimated Dose		Toxicity Values		Risk Estimates	
	Constituent	Indoor Air Concentration µg/m3	ADEcancer (Cancer) µg/m3	ADEnon-cancer (Non-cancer) µg/m3	Unit Risk per µg/m3	Chronic Noncancer Reference Concentration µg/m3	Cancer Risk (--)	Hazard Quotient (--)
95-63-6	1,2,4,-Trimethylbenzene	3.18E+00	2.8E-01	7.3E-01	NA	7.0E+00	NA	1.E-01
78-93-3	2-Butanone	1.89E+00	1.7E-01	4.3E-01	NA	5.0E+03	NA	9.E-05
67-64-1	Acetone	8.21E+00	7.3E-01	1.9E+00	NA	8.0E+02	NA	2.E-03
91-20-3	Naphthalene	3.25E-01	2.9E-02	7.5E-02	NA	3.0E+00	NA	2.E-02
71-43-2	Benzene	2.55E+00	2.3E-01	5.9E-01	7.8E-06	3.0E+01	2.E-06	2.E-02
74-87-3	Chloromethane	1.29E+00	1.1E-01	3.0E-01	NA	9.0E+01	NA	3.E-03
67-66-3	Chloroform	2.83E+00	2.5E-01	6.5E-01	2.3E-05	6.6E+02	6.E-06	1.E-03
56-23-5	Carbon Tetrachloride	5.59E-01	5.0E-02	1.3E-01	1.5E-05	4.3E+02	7.E-07	3.E-04
156-59-2	cis-1,2-Dichloroethene	3.58E+00	3.2E-01	8.2E-01	NA	3.5E+01	NA	2.E-02
75-71-8	Dichlorodifluoromethane	3.36E+00	3.0E-01	7.7E-01	NA	2.0E+02	NA	4.E-03
100-41-4	Ethylbenzene	1.80E+00	1.6E-01	4.1E-01	NA	1.0E+03	NA	4.E-04
108-10-1	4-Methyl-2-pentanone	1.21E+00	1.1E-01	2.8E-01	NA	3.0E+03	NA	9.E-05
1330-20-7	Xylenes	9.99E+00	8.9E-01	2.3E+00	NA	1.0E+02	NA	2.E-02
108-88-3	Toluene	1.31E+01	1.2E+00	3.0E+00	NA	5.0E+03	NA	6.E-04
156-60-5	trans-1,2-Dichloroethene	1.72E+00	1.5E-01	4.0E-01	NA	7.0E+01	NA	6.E-03
79-01-6	Trichloroethene	1.12E+00	9.9E-02	2.6E-01	1.7E-06	1.8E+02	2.E-07	1.E-03
75-69-4	Trichlorofluoromethane	4.92E+00	4.4E-01	1.1E+00	NA	7.0E+02	NA	2.E-03
75-01-4	Vinyl chloride	5.31E-01	4.7E-02	1.2E-01	8.8E-06	1.0E+02	4.E-07	1.E-03

Not detected in groundwater or soil gas

	Cancer Risk	Hazard Index
TOTAL:	9E-06	2E-01

Bold = Cancer Risk >1.0E-05 or Hazard Quotient > 1.0E+01

Where:

LADEcancer = IAC x EFx ED x EP/APcancer
ADEnon-cancer = IAC x EF x ED x EP / APnon-cancer
Cancer Risk = LADEcancer x UR
Hazard Quotient = ADEnon-cancer / Inhalation Reference Concentration

LADE = Life Time Average Daily Exposure
ADE = Average Daily Exposure
EPC = Exposure Point Concentration
$\mu g/m^3$ = micrograms per cubic meter

And where:

Exposure Frequency (EF) =	250	days/year (5 days a week for 26 weeks of exposure)
Exposure Duration (ED) =	8	hrs/day [1]
Exposure Period (EP) =	27	yr [1]
Unit Conversion (UC) =	0.042	days/hr
Averaging Period (APcancer) =	25550	days [1]
Averaging Period (APnon-cancer) =	9855	days [1]

[1] MADEP, 2006

Table 3
Commercial Worker
Inhalation of Indoor Air Exposure Pathway
New Bedford High School - Lecture Room D-120
New Bedford, Massachusetts

		EPC	Estimated Dose		Toxicity Values		Risk Estimates	
	Constituent	Indoor Air Concentration µg/m3	ADEcancer (Cancer) µg/m3	ADEnon-cancer (Non-cancer) µg/m3	Unit Risk per µg/m3	Chronic Noncancer Reference Concentration µg/m3	Cancer Risk (--)	Hazard Quotient (--)
78-93-3	2-Butanone	2.44E+00	2.2E-01	5.6E-01	NA	5.0E+03	NA	1.E-04
71-55-6	1,1,1-Trichloroethane	7.14E+00	6.3E-01	1.6E+00	NA	5.2E+03	NA	3.E-04
67-64-1	Acetone	9.90E+00	8.8E-01	2.3E+00	NA	8.0E+02	NA	3.E-03
71-43-2	Benzene	4.48E+00	4.0E-01	1.0E+00	7.8E-06	3.0E+01	3.E-06	3.E-02
56-23-5	Carbon tetrachloride	4.78E-01	4.2E-02	1.1E-01	1.5E-05	4.3E+02	6.E-07	3.E-04
67-66-3	Chloroform	5.90E-01	5.2E-02	1.4E-01	2.3E-05	6.6E+02	1.E-06	2.E-04
74-87-3	Chloromethane	1.23E+00	1.1E-01	2.8E-01	NA	9.0E+01	NA	3.E-03
75-71-8	Dichlorodifluoromethane	3.06E+00	2.7E-01	7.0E-01	NA	2.0E+02	NA	4.E-03
1634-04-4	Methyl tert-butyl ether	4.74E+00	4.2E-01	1.1E+00	NA	3.0E+03	NA	4.E-04
91-20-3	Naphthalene	6.44E-01	5.7E-02	1.5E-01	NA	3.0E+00	NA	5.E-02
108-88-3	Toluene	3.69E+01	3.3E+00	8.5E+00	NA	5.0E+03	NA	2.E-03
127-18-4	Tetrachloroethene	1.76E+00	1.6E-01	4.1E-01	1.0E-05	4.6E+03	2.E-06	9.E-05
79-01-6	Trichloroethene	1.07E-01	9.5E-03	2.5E-02	1.7E-06	1.8E+02	2.E-08	1.E-04
75-69-4	Trichlorofluoromethane	2.03E+00	1.8E-01	4.7E-01	NA	7.0E+02	NA	7.E-04
100-41-4	Ethylbenzene	6.00E+00	5.3E-01	1.4E+00	NA	1.0E+03	NA	1.E-03
1330-20-7	Xylenes	2.55E+01	2.3E+00	5.9E+00	NA	1.0E+02	NA	6.E-02
95-63-6	1,2,4,-Trimethylbenzene	6.96E+00	6.2E-01	1.6E+00	NA	7.0E+00	NA	2.E-01
108-67-8	1,3,5-Tricmethylbenzene	2.11E+00	1.9E-01	4.9E-01	NA	5.0E+01	NA	1.E-02
103-65-1	n-Propylbenzene	1.48E+00	1.3E-01	3.4E-01	NA	1.0E+03	NA	3.E-04

RfC for C9-C10 aromatics used for 1,3,5-trimethylbenzene
Not detected in groundwater or soil gas
Where:

	Cancer Risk	Hazard Index
TOTAL:	7E-06	4E-01

LADEcancer = IAC x EFx ED x EP/APcancer
ADEnon-cancer = IAC x EF x ED x EP / APnon-cancer
Cancer Risk = LADEcancer x UR
Hazard Quotient = ADEnon-cancer / Inhalation Reference Concentration

Bold = Cancer Risk >1.0E-05 or Hazard Quotient > 1.0E+01

LADE = Life Time Average Daily Exposure
ADE = Average Daily Exposure
EPC = Exposure Point Concentration
$\mu g/m^3$ = micrograms per cubic meter

And where:

Exposure Frequency (EF) =	250	days/year (5 days a week for 26 weeks of exposure)
Exposure Duration (ED) =	8	hrs/day [1]
Exposure Period (EP) =	27	yr [1]
Unit Conversion (UC) =	0.042	days/hr
Averaging Period (APcancer) =	25550	days [1]
Averaging Period (APnon-cancer) =	9855	days [1]

[1] MADEP, 2006

Figure 1
Determination of VOCs in Indoor Air Related to Vapor Intrusion
New Bedford High School
New Bedford, Massachusetts

GROUNDWATER	SOIL GAS	INDOOR AIR POENTIALLY RELATED TO VI	INDOOR AIR NOT RELATED TO VI
Chlorobenzene	1,1,1-Trichloroethane	Dichlorodifluoromethane	Methylene chloride
cis-1,2-Dichloroethene	**1,1-Dichloroethene**	Chloromethane	Methyl tert butyl ether
trans-1,2-Dichloroethene	1,2,4-Trimethylbenzene	**Vinyl chloride**	**1,2-Dichloroethane**
1,2-Dichlorobenzene	1,3,5-Trimethybenzene	Acetone	**Carbon tetrachloride**
1,3-Dichlorobenzene	2-Butanone	Trichlorofluoromethane	
1,4-Dichlorobenzene	2-Hexanone	trans-1,2-Dichloroethene	
p-Isopropyltoluene	**Acetone**	2-Butanone	
Tetrachloroethene	**Benzene**	**cis-1,2-Dichloroethene**	
Trichloroethene	Carbon disulfide	**Chloroform**	
Vinyl Chloride	Chloroethane	1,1,1-Trichloroethane	
	Chloroform	**Benzene**	
	Chloromethane	**Trichloroethene**	
	cis-1,2-Dichloroethene	4-Methyl-2-pentanone	
	Dichlorodifluoromethane	Toluene	
	Ethylbenzene	**Tetrachloroethene**	
	4-Methyl-2-pentanone	Ethylbenzene	
	p/m-Xylene	**p/m-Xylene**	
	o-Xylene	o-Xylene	
	Styrene	n-Propylbenzene	
	Tetrachloroethene	1,3,5-Trimethylbenzene	
	Tetrahydrofuran	1,2,4-Trimethylbenzene	
	Toluene	**Naphthalene**	
	trans-1,2-Dichloroethene		
	Trichloroethene		
	Trichlorofluoromethane		
	Vinyl chloride		
	Naphthalene		
	Isopropylbenzene		
	n-Butylbenzene		
	tert-Butylbenzene		
	n-Propylbenzene		

NOTES:

Only detected compounds shown.

Shaded values indicate exceedance of GW-2 Standard (groundwater)/soil gas screening value (soil gas)/IATV (indoor air).

Additional petroleum-related compounds, not part of the groundwater analytical program, that are considered potentially site-related.

Compounds not detected in groundwater (on-property or off-property) and therefore, not considered site-related.

Compounds with consistently higher first floor and/or outdoor air concentrations than basement, indicating outdoor or first floor source.

Indoor air COPCs not evaluated at a specific residence due to the high probability that an unrelated indoor first floor source is present.

IATV - Indoor Air Threshold Value

COPC - Contaminant of Potential Concern

APPENDIX C

GROUNDWATER MONITORING WELL INSTALLATION LOGS

TRC
Wannalancit Mills
650 Suffolk Street
Lowell MA
Telephone: 978-970-5600
Fax: 978-453-1995

BORING/WELL CONSTRUCTION LOG

CLIENT/PROJECT NUMBER City of New Bedford -115058
BORING/WELL NUMBER MW-5D
TRC GEOLOGIST J. Fiero
DRILLING CONTRACTOR/FOREMAN Geosearch/John
DATE DRILLED 8/24/2010
LOCATION NBHS - Near bay doors to mechanical room (MW-5)
SAMPLING METHOD 24" Splitspoon
DRILLING METHOD Pneumatic Hammer CME - 75

SCREEN TYPE/SLOT Sch. 40 10-slot PVC
FILTER PACK TYPE Sand
SEAL TYPE Bentonite
DEPTH TO WATER (Approximate Feet) 7
TOTAL DEPTH (Feet) 19.5
GROUND ELEVATION (Feet) 84.26
REFERENCE ELEVATION (Feet) 83.98

NOTES MW-5D (15-16.75) sampled for TOC & MW-5D (15-19.75) sampled for grain size and atteberg limits

DEPTH (ft. BGL)	BLOW COUNTS	PEN/REC (INCHES)	CORE #	GRAPHIC LOG	LITHOLOGIC DESCRIPTION	Field Testing (ppm)	SAMPLE ID/ TIME
					Augered directly to 15-feet below ground surface. See MW-5 well log for lithologic description.		
15	6 8 21 50	21/10	S-1		0-10" Tan fine-coarse SAND and 1/8-1" angular gravel, very dense.	2.0	MW-5D (15-16.75) 1000
							MW-5D (15-19.5) Hold
	50	2/2	S-2		0-18" Blow in tan to brown TILL (fine-coarse SAND, little-some 1/8-1/2 inch angular gravel and silt). 18-20" Pulverized ROCK (Mafic poor granite, bedrock). End of Boring @ 19.5 feet (Refusal)	3.0	

WELL DIAGRAM

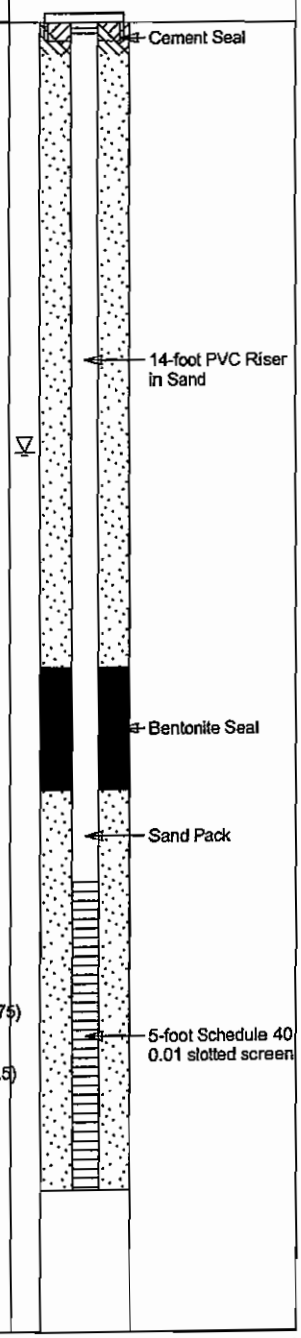

TRC
Wannalancit Mills
650 Suffolk Street
Lowell MA
Telephone: 978-970-5600
Fax: 978-453-1995

BORING/WELL CONSTRUCTION LOG

CLIENT/PROJECT NUMBER City of New Bedford -115058
BORING/WELL NUMBER MW-7D
TRC GEOLOGIST J. Fiero
DRILLING CONTRACTOR/FOREMAN Geosearch/John
DATE DRILLED 8/24/2010
LOCATION NBHS - Adjacent to MW-7 on flagpole island
SAMPLING METHOD 24" Splitspoon
DRILLING METHOD Pneumatic Hammer CME - 75

SCREEN TYPE/SLOT Sch. 40 10-slot PVC
FILTER PACK TYPE Sand
SEAL TYPE Bentonite
DEPTH TO WATER (Approximate Feet) 7
TOTAL DEPTH (Feet) 31
GROUND ELEVATION (Feet) 91.30
REFERENCE ELEVATION (Feet) 90.85

NOTES MW-7D (13-17) & (30-31.35) sampled for atterberg limits and grain size and MW-7D (8-10), (10-12), (13-15) and (20-22) sampled for TOC

DEPTH (ft. BGL)	BLOW COUNTS	PEN/REC (INCHES)	CORE #	GRAPHIC LOG	LITHOLOGIC DESCRIPTION	Field Testing (ppm)	SAMPLE ID/ TIME
1–7					Auger directly to 15-feet below ground surface. See MW-7 well log for lithologic description.		
8–9	WOR WOR	24/5	S-1		0-5" Tan to dark-brown, rusty red mottled FILL (little-trace ash, slag and glass), fine-coarse sand, some-little silt, wet-saturated.	1.5	MW-7D (8-10) 1300
10–12	1 2 1	24/15	S-2		0-5" Tan to dark-brown, rusty red mottled FILL (little-trace ash, slag and glass), fine-coarse sand, some-little silt, wet-saturated.	0.9	MW-7D (10-12) 1320
12–13	1 2 1				10-15" Dark-brown to black SILT and PEAT, some organic partings and fibers.		
13–14	3 2	24/17	S-3		0-10" Gray fine-medium SAND, little silt, trace organics.	1	MW-7D (13-15) 1330
14–15	1				10-17" Gray fine SAND, some silt, trace medium sand (native material).		
15–17	WOR WOR WOR WOR	24/18	S-4		0-18" Gray fine SAND, some silt, trace medium sand and organics.	0.3	MW-7D (13-17)
18–19	1						
20–22	2 4 7 8	24/24	S-5		Gray to light gray in bottom 5-6-inches fine-medium SAND, trace organics, saturated.	0.2	MW-7D (20-22) 1400
23–29							
30–31	9 30 50	16/16	S-6		0-4" Gray fine-medium SAND, little coarse sand (Till), dense.	0.2	MW-7D (30-31.35) Hold
					4-10" Tan fine-coarse SAND, little to some 1/4-1/3 inch angular gravel and silt.		
					10-16" Fractured weathered ROCK (mafic poor granitic bedrock).		
					End of Boring @ 31.35 feet (Refusal) (Note: WOR = Weight of Rig)		

WELL DIAGRAM

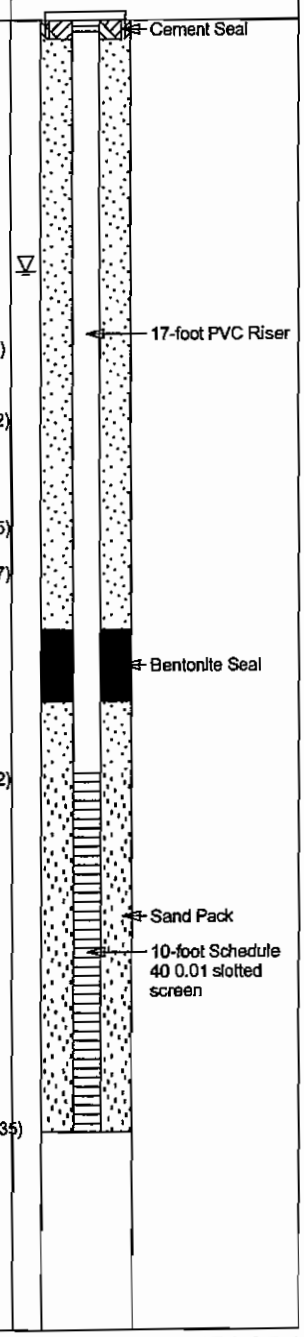

TRC
Wannalancit Mills
650 Suffolk Street
Lowell MA
Telephone: 978-970-5600
Fax: 978-453-1995

BORING/WELL CONSTRUCTION LOG

CLIENT/PROJECT NUMBER City of New Bedford -115058
BORING/WELL NUMBER MW-25
TRC GEOLOGIST E.Wachtel
DRILLING CONTRACTOR/FOREMAN New England Geotech/H. Rembijas
DATE DRILLED 8-26-10
LOCATION NBHS - West of parking entrance along Parker St.
SAMPLING METHOD 60" Macrocore
DRILLING METHOD Direct Push 6600 DT Truck Rig
NOTES No samples

SCREEN TYPE/SLOT Sch. 40 10-slot PVC
FILTER PACK TYPE Sand
SEAL TYPE Bentonite
DEPTH TO WATER (Approximate Feet) 10
TOTAL DEPTH (Feet) 16
GROUND ELEVATION (Feet) 87.53
REFERENCE ELEVATION (Feet) 87.28

DEPTH (ft. BGL)	BLOW COUNTS	PEN/REC (INCHES)	CORE #	GRAPHIC LOG	LITHOLOGIC DESCRIPTION	Field Testing (ppm)	SAMPLE ID/ TIME
		60/35	S-1		0-8" Brown TOPSOIL (fine-medium sand and grass).	0.5	
1					8-16" Tan fine to medium SAND, some angular gravel.		
2					16-32" Brown fine SAND and SILT, some fill (coal, ash, and slag).		
3							
4							
					32-35" Dark-brown PEAT, moist.		
5		60/35	S-2		0-35" Tan fine-coarse SAND, some rounded gravel.	0.0	
6							
7							
8							
9							
10		60/30	S-3		0-8" Brown fine-coarse SAND, some rounded gravel, saturated.	1268	
11					(PID headspace reading approved to be anomolous and not representative of Site conditions.)		
12					8-30" Brown fine-coarse SAND and sub-angular GRAVEL, saturated.		
13							
14							
15					End of Boring @ 15-feet		
16					(Drove well casing to 16-feet)		

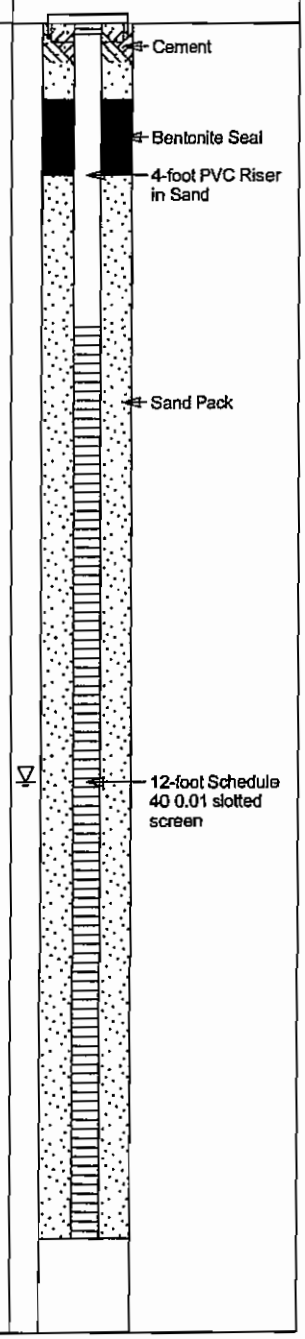

TRC
Wannalancit Mills
650 Suffolk Street
Lowell MA
Telephone: 978-970-5600
Fax: 978-453-1995

BORING/WELL CONSTRUCTION LOG

CLIENT/PROJECT NUMBER City of New Bedford -115058
BORING/WELL NUMBER MW-26
TRC GEOLOGIST E.Wachtel
DRILLING CONTRACTOR/FOREMAN New England Geotech/H. Rembijas
DATE DRILLED 8-26-10
LOCATION NBHS - Along Parker Street/South of F-block
SAMPLING METHOD 60" Macrocore
DRILLING METHOD Direct Push 6600 DT Truck Rig
NOTES No samples

SCREEN TYPE/SLOT Sch. 40 10-slot PVC
FILTER PACK TYPE Sand
SEAL TYPE Bentonite
DEPTH TO WATER (Approximate Feet) 4.5
TOTAL DEPTH (Feet) 13.5
GROUND ELEVATION (Feet) 86.47
REFERENCE ELEVATION (Feet) 86.10

DEPTH (ft. BGL)	BLOW COUNTS	PEN/REC (INCHES)	CORE #	GRAPHIC LOG	LITHOLOGIC DESCRIPTION	Field Testing (ppm)	SAMPLE ID/ TIME
		60/30	S-1		0-6" Brown organic TOPSOIL, some grass and roots.	0.0	
1					6-10" Tan fine-medium SAND, some rounded gravel.		
2					10-30" Brown fine-medium SAND and FILL (coal fragments, ash, white ash, trace bricks fragments), some rounded gravel, moist to wet with rust banding at 4.5-feet.		
3							
4							
5		60/54	S-2		0-3" Collapsed FILL.	0.0	
					3-8" Tan to gray SILT.		
6					8-38" Dark-brown PEAT, some plant fibers.		
7							
8							
					38-42" Tan fine SAND and SILT.		
9					42-54" Gray fine-medium SAND.		
10		60/36	S-3		0-36" Gray fine-medium SAND and SILT.	0.0	
11							
12							
13							
					End of Boring at 15-feet		

WELL DIAGRAM

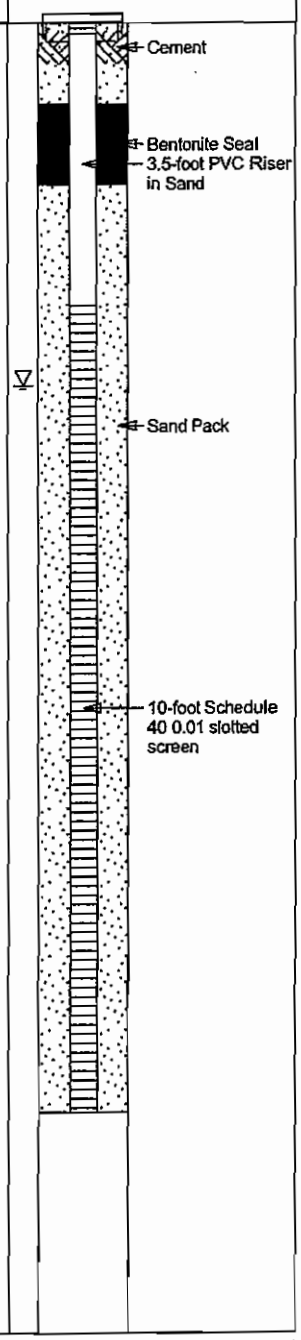

TRC
Wannalancit Mills
650 Suffolk Street
Lowell MA
Telephone: 978-970-5600
Fax: 978-453-1995

BORING/WELL CONSTRUCTION LOG

CLIENT/PROJECT NUMBER City of New Bedford -115058
BORING/WELL NUMBER MW-27
TRC GEOLOGIST J. Saunders
DRILLING CONTRACTOR/FOREMAN New England Geotech/S. Perry
DATE DRILLED 8/30/10
LOCATION NBHS - North end of mechanical room
SAMPLING METHOD 48" Macrocore
DRILLING METHOD Direct Push 540 Dolly Rig
NOTES Sampled for VOCs

SCREEN TYPE/SLOT Sch. 40 10-slot PVC
FILTER PACK TYPE Sand
SEAL TYPE Bentonite
DEPTH TO WATER (Approximate Feet) 3.5
TOTAL DEPTH (Feet) 12
GROUND ELEVATION (Feet) 84.66
REFERENCE ELEVATION (Feet) 84.44

DEPTH (ft. BGL)	BLOW COUNTS	PEN/REC (INCHES)	CORE #	GRAPHIC LOG	LITHOLOGIC DESCRIPTION	Field Testing (ppm)	SAMPLE ID/ TIME
		48/NA	S-1		0-4" CONCRETE (cored), vacumed or hand excavated approximately 6-inches below concrete.	2.0	
1					4-24" Gray GRAVEL with tan to brown fine-medium sand matrix, slightly moist, no odor, no staining.		
2							
3					24-30" Brown fine-medium SAND and fine GRAVEL, moist, no odor, no staining.		
4		48/20	S-2		(Overdrilled to 8-feet to stop borehole from collapsing.) 0-20" Gray fine SAND, moist to wet, musty chemical odor, no staining.	1766	
5							
6							
7							MW-27 (6-8) 1340
8		48/36	S-3		0-36" Gray to brown SILT and fine SAND, moist to wet, musty chemical odor, no staining. (Barrel jammed, did best to log as material was removed.	160	
9							
10							
11							
12					End of Boring at 12-feet		

WELL DIAGRAM

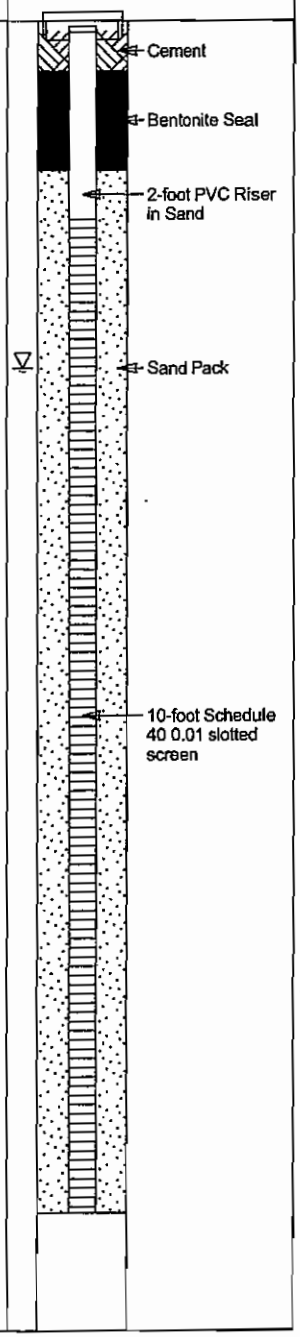

TRC
Wannalancit Mills
650 Suffolk Street
Lowell MA
Telephone: 978-970-5600
Fax: 978-453-1995

BORING/WELL CONSTRUCTION LOG

CLIENT/PROJECT NUMBER City of New Bedford -115058
BORING/WELL NUMBER MW-27D
TRC GEOLOGIST J. Saunders
DRILLING CONTRACTOR/FOREMAN Geologic EE/Glen & Dave
DATE DRILLED 11/9/10
LOCATION NBHS - Mech Room, Approx. 3' feet east of MW-27
SAMPLING METHOD 2" Diameter, 24" Split Spoon
DRILLING METHOD Drive & Wash Acker Scout ATV Rig
NOTES No Samples

SCREEN TYPE/SLOT Sch. 40 10-slot PVC
FILTER PACK TYPE Sand
SEAL TYPE Bentonite
DEPTH TO WATER (Approximate Feet) 3
TOTAL DEPTH (Feet) 17
GROUND ELEVATION (Feet)
REFERENCE ELEVATION (Feet)

DEPTH (ft. BGL)	BLOW COUNTS	PEN/REC (INCHES)	CORE #	GRAPHIC LOG	LITHOLOGIC DESCRIPTION	Field Testing (ppm)	SAMPLE ID/ TIME
					0-4" Cored CONCRETE floor (with vapor barrier)		
1					4-84" Gray to brown fine SAND, little to some silt and gravel, wet, musty chemical odor and sheen visible on purge water. (Description based on drill cuttings)	3.8	
2							
3							
4							
5							
6							
7					84-138" Gray SILT and fine SAND, trace gravel, wet, musty chemical odor, sheen on purge water. (Description based on drill cuttings)		
8							
9							
10							
11							
12	35 45 37 49	24/6	S-1		0-6" Gray to tan-brown TILL with fine-medium sand, little coarse sand, trace-little fine-medium gravel, hard, dense, wet, no staining, no odor. (Bent split spoon. Spoon may have been driven only a portion of the 24" between 11.5 and 13.5-feet as needed roller bit to advance from 12 to14-feet (possible boulder).	1	
13					144-168" GRANITE boulder.		
14					168-186" TILL (appears to be till based on cuttings).		
15							
16					186-204" BOULDER or BEDROCK (need bit to reach 17' below ground surface).		
17					End of Boring @ 17-feet (see soil boring MW-27 for additional descriptions of shallow soils in area)		

WELL DIAGRAM

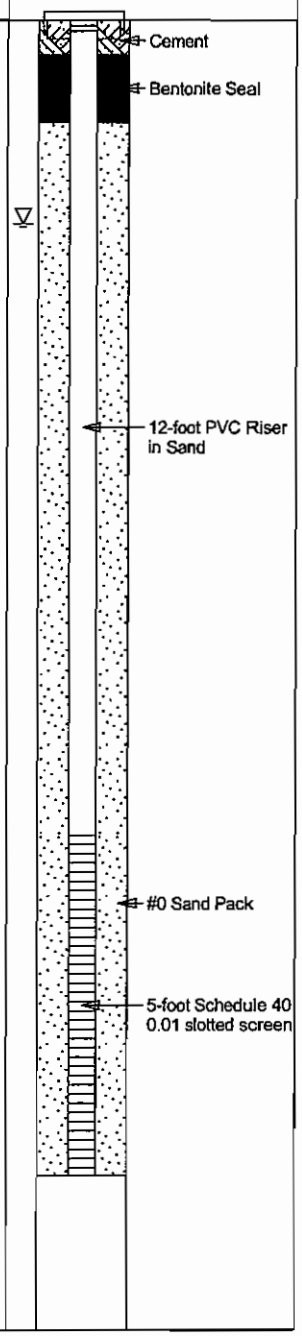

TRC
Wannalancit Mills
650 Suffolk Street
Lowell MA
Telephone: 978-970-5600
Fax: 978-453-1995

BORING/WELL CONSTRUCTION LOG

CLIENT/PROJECT NUMBER City of New Bedford -115058
BORING/WELL NUMBER MW-28
TRC GEOLOGIST J. Saunders
DRILLING CONTRACTOR/FOREMAN NEG/H. Rembijas & S. Perry
DATE DRILLED 8/30/10
LOCATION NBHS - Immediately north of PVP-6 (Mech Rm)
SAMPLING METHOD 48" Macrocore
DRILLING METHOD Direct Push 540 Dolly Rig

SCREEN TYPE/SLOT Sch. 40 10-slot PVC
FILTER PACK TYPE Sand
SEAL TYPE Bentonite
DEPTH TO WATER (Approximate Feet) 3.5
TOTAL DEPTH (Feet) 12
GROUND ELEVATION (Feet) 84.70
REFERENCE ELEVATION (Feet) 84.56

NOTES MW-28 (8-10) sampled for VOCs & MW-28 (9-10) sampled for grain size, TOC and atteberg limits

DEPTH (ft. BGL)	BLOW COUNTS	PEN/REC (INCHES)	CORE #	GRAPHIC LOG	LITHOLOGIC DESCRIPTION	Field Testing (ppm)	SAMPLE ID/ TIME
		48/28	S-1		0-4" CONCRETE floor (cored).	6.1	
1, 2, 3					4-28" Dark-orange to brown fine-medium SAND, little fine-coarse gravel, very slightly moist, no odor, no staining.		
4, 5		48/40	S-2		0-16" Brown fine-coarse SAND, trace-little fine gravel, slightly moist, no staining, slight chemical odor.	64.3	
6, 7					16-40" Gray SILT and fine SAND, slight chemical odor, no staining, moist to wet.		
8, 9, 10, 11		48/24	S-3		0-24" Gray fine SAND and SILT, wet, slight odor, no staining.	84.6	MW-28 (8-10) 1445
12					End of Boring @ 12 feet		

WELL DIAGRAM

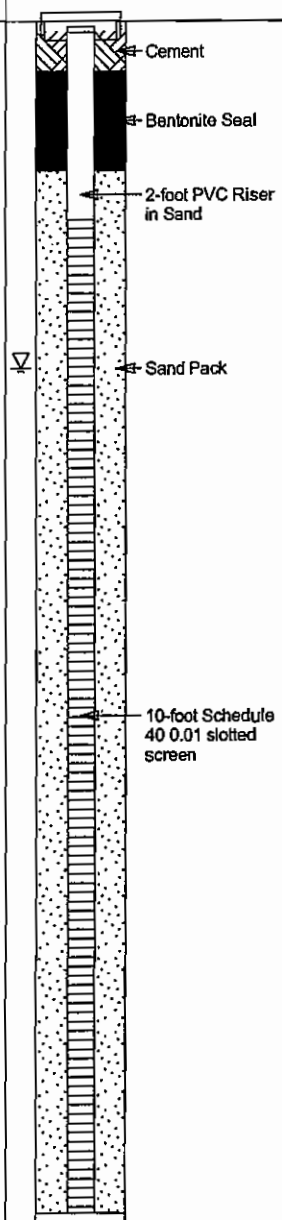

TRC
Wannalancit Mills
650 Suffolk Street
Lowell MA
Telephone: 978-970-5600
Fax: 978-453-1995

BORING/WELL CONSTRUCTION LOG

CLIENT/PROJECT NUMBER City of New Bedford -115058
BORING/WELL NUMBER MW-29
TRC GEOLOGIST J. Saunders
DRILLING CONTRACTOR/FOREMAN NEG/H. Rembijas & S. Perry
DATE DRILLED 8/30/10
LOCATION NBHS - Pipe Tunnel west of D-block
SAMPLING METHOD 48" Macrocore
DRILLING METHOD Direct Push 540 Dolly Rig
NOTES No Samples

SCREEN TYPE/SLOT Sch. 40 10-slot PVC
FILTER PACK TYPE Sand
SEAL TYPE Bentonite
DEPTH TO WATER (Approximate Feet) 4
TOTAL DEPTH (Feet) 12
GROUND ELEVATION (Feet) 84.71
REFERENCE ELEVATION (Feet) 84.53

DEPTH (ft. BGL)	BLOW COUNTS	PEN/REC (INCHES)	CORE #	GRAPHIC LOG	LITHOLOGIC DESCRIPTION	Field Testing (ppm)	SAMPLE ID/ TIME
		48/36	S-1		0-4" CONCRETE (cored).	1.3	
1					4-36" Tan to brown to orange-brown fine-medium SAND, some coarse sand, trace fine-medium gravel, very slightly moist, no odor, no staining.		
2							
3							
4		48/40	S-2		0-32" Gray to brown fine-medium SAND, trace coarse sand, fine gravel and organics at approximately 28-inches (thin layer), no staining, slight organic odor.	1.3	
5							
6							
7					32-40" Gray fine SAND and SILT, very moist to wet, no odor, no staining.		
8		48/NA	S-3		Barrel Jammed (recovery unknown), Material is gray fine SAND and SILT, wet, no staining, slight organic odor.	67.5	
9							
10							
11							
12					End of Boring @ 12 feet		

WELL DIAGRAM

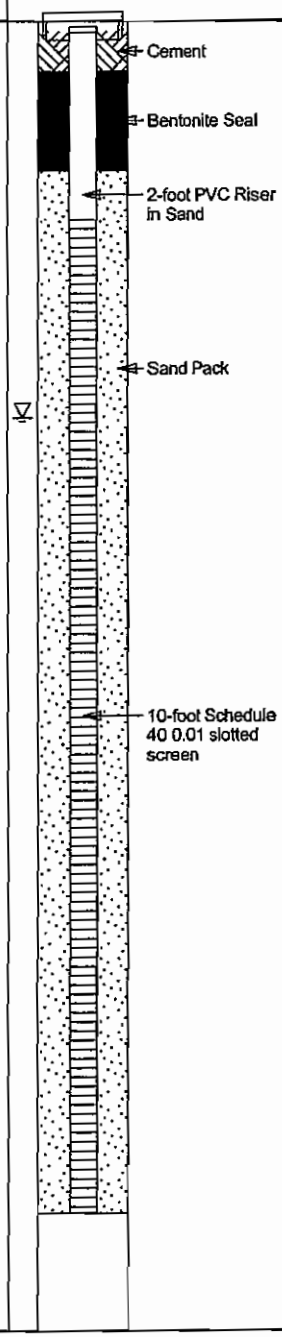

TRC
Wannalancit Mills
650 Suffolk Street
Lowell MA
Telephone: 978-970-5600
Fax: 978-453-1995

BORING/WELL CONSTRUCTION LOG

CLIENT/PROJECT NUMBER City of New Bedford -115058
BORING/WELL NUMBER MW-30
TRC GEOLOGIST J. Saunders
DRILLING CONTRACTOR/FOREMAN New England Geotech/H. Rembijas
DATE DRILLED 10/13/10
LOCATION NBHS - Off middle of E-block (girl's gym)
SAMPLING METHOD 60" Macrocore
DRILLING METHOD Direct Push 6600 DT Truck Rig
NOTES No Samples

SCREEN TYPE/SLOT Sch. 40 10-slot PVC
FILTER PACK TYPE Sand
SEAL TYPE Bentonite
DEPTH TO WATER (Approximate Feet) 8.5
TOTAL DEPTH (Feet) 15
GROUND ELEVATION (Feet)
REFERENCE ELEVATION (Feet)

DEPTH (ft. BGL)	BLOW COUNTS	PEN/REC (INCHES)	CORE #	GRAPHIC LOG	LITHOLOGIC DESCRIPTION	Field Testing (ppm)	SAMPLE ID/ TIME
		60/47	S-1		0-6" Dark-brown fine SAND, some silt, trace coarse sand and roots (topsoil), slightly moist, no odor, no staining.	1.2	
1					6-24" Dark-tan to brown fine SAND, trace to little medium-coarse sand, trace silt and fine gravel, moist, no odor, no staining.		
2							
3					24-31" Light-tan to brown fine SAND, trace silt, medium-coarse sand and fine gravel, moist, no odor, no staining.		
4					31-47" Dark-gray to brown (with some rust coloration) ashy FILL with coal, trace glass, metal and sand, moist, no odor, no staining.		
5		60/35	S-2		0-11" Gray ashy FILL material with coal, little glass, trace brick, sand and rust coloration, moist, no odor, no staining.	0.4	
6							
7					11-35" Dark-brown to black organic SILT (peat), with wood matter, very moist, no staining, slight organic odor.		
8							
9							
10		60/46	S-3		0-12" Dark-brown to black organic SILT (peat), with wood matter, very moist, no staining, slight organic odor.	0.0	
11							
12					12-46" Gray fine SAND, some silt, wet, slight organic odor, no staining.		
13							
14							
15					End of Boring @ 15-feet (Drill cuttings returned to borehole)		

WELL DIAGRAM

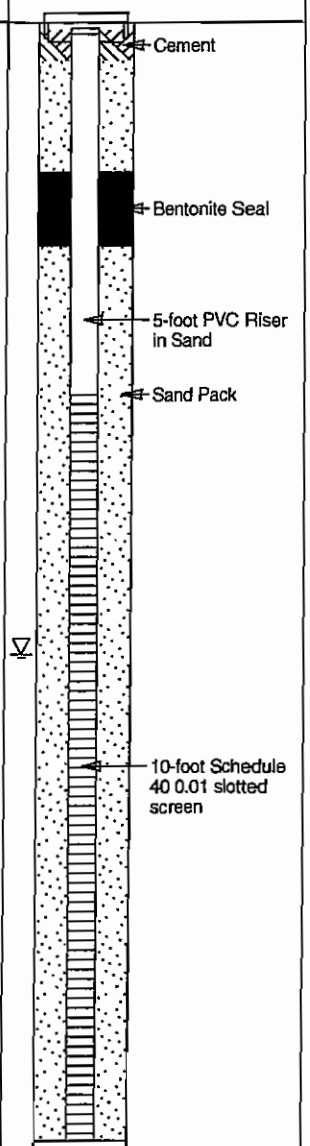

TRC
Wannalancit Mills
650 Suffolk Street
Lowell MA
Telephone: 978-970-5600
Fax: 978-453-1995

BORING/WELL CONSTRUCTION LOG

CLIENT/PROJECT NUMBER City of New Bedford -115058
BORING/WELL NUMBER MW-31
TRC GEOLOGIST J. Saunders
DRILLING CONTRACTOR/FOREMAN NEG/H. Rembijas & S. Perry
DATE DRILLED 10/13/10
LOCATION NBHS - Approx. 31-feet west of MW-27
SAMPLING METHOD 48" Macrocore
DRILLING METHOD Direct Push 9100 AMS Track Rig
NOTES No Samples

SCREEN TYPE/SLOT Sch. 40 10-slot PVC
FILTER PACK TYPE Sand
SEAL TYPE Bentonite
DEPTH TO WATER (Approximate Feet) 4
TOTAL DEPTH (Feet) 9
GROUND ELEVATION (Feet)
REFERENCE ELEVATION (Feet)

DEPTH (ft. BGL)	BLOW COUNTS	PEN/REC (INCHES)	CORE #	GRAPHIC LOG	LITHOLOGIC DESCRIPTION	Field Testing (ppm)	SAMPLE ID/ TIME
		48/28	S-1		0-4" CONCRETE (with black vapor barrier).	0.4	
1					4-28" Dark-tan to medium-brown fine SAND, little silt, trace medium-coarse sand and fine gravel, dry, no odor, no staining.		
2							
3							
4		48/36	S-2		0-26" Medium-brown fine-medium SAND, little coarse sand, grain size increases with depth, color changes to dark-gray to brown at approximately 20-inches, trace fine gravel, wet, no odor, no staining.	0.3	
5							
6							
7					26-36" Gray fine SAND and SILT, somewhat dense, wet, no odor, no staining.		
8		12/48	S-3		Barrel jammed with collapsed material, Recovery (0-12 inches) appears to be gray fine SAND and SILT, wet, no odor, no staining.	0.0	
9					End of Boring @ 9-feet		

WELL DIAGRAM

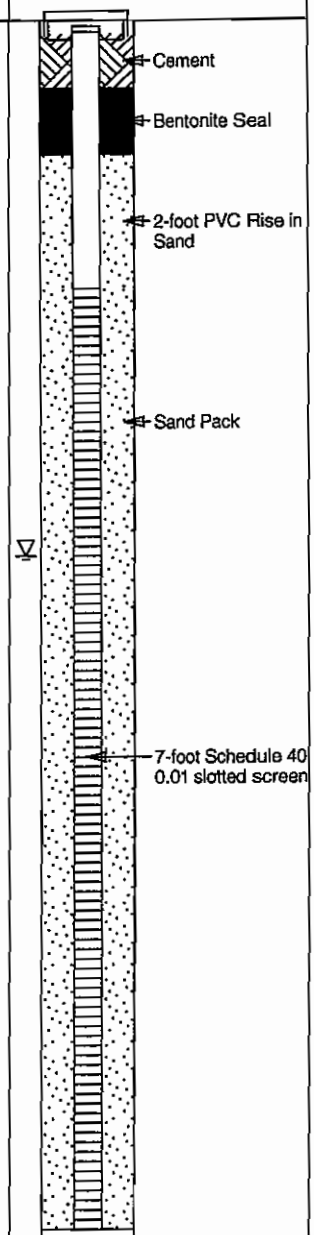

TRC
Wannalancit Mills
650 Suffolk Street
Lowell MA
Telephone: 978-970-5600
Fax: 978-453-1995

BORING/WELL CONSTRUCTION LOG

CLIENT/PROJECT NUMBER City of New Bedford -115058
BORING/WELL NUMBER MW-32
TRC GEOLOGIST J. Saunders
DRILLING CONTRACTOR/FOREMAN NEG/H. Rembijas & S. Perry
DATE DRILLED 10/13/10
LOCATION NBHS - Approx. 16-feet east of MW-27
SAMPLING METHOD 48" Macrocore
DRILLING METHOD Direct Push 9100 AMS Track Rig
NOTES No Samples

SCREEN TYPE/SLOT Sch. 40 10-slot PVC
FILTER PACK TYPE Sand
SEAL TYPE Bentonite
DEPTH TO WATER (Approximate Feet) 4
TOTAL DEPTH (Feet) 10
GROUND ELEVATION (Feet)
REFERENCE ELEVATION (Feet)

DEPTH (ft. BGL)	BLOW COUNTS	PEN/REC (INCHES)	CORE #	GRAPHIC LOG	LITHOLOGIC DESCRIPTION	Field Testing (ppm)	SAMPLE ID/ TIME
		48/23	S-1		0-4" Cored CONCRETE (with black vapor barrier).	0.6	
1					4-23" Dark to medium-brown fine SAND, little silt, trace medium-coarse sand and fine-medium gravel, very slightly moist, no staining, very slight musty odor.		
2							
3							
4		48/40	S-2		0-24" Gray to medium-brown fine SAND, some medium-coarse sand, grain size increases with depth, trace silt and fine-medium gravel (some well rounded), wet, slight organic odor, no staining.	0.4	
5							
6							
7					24-40" Gray fine SAND and SILT, trace fine-coarse gravel, wet, no staining, slight organic odor.		
8		24/24	S-3		Barrel jammed, material appears to be gray fine SAND and SILT, trace fine-coarse gravel, wet, no staining, slight organic odor.	0.0	
9							
10					End of Boring @ 10-feet		

WELL DIAGRAM

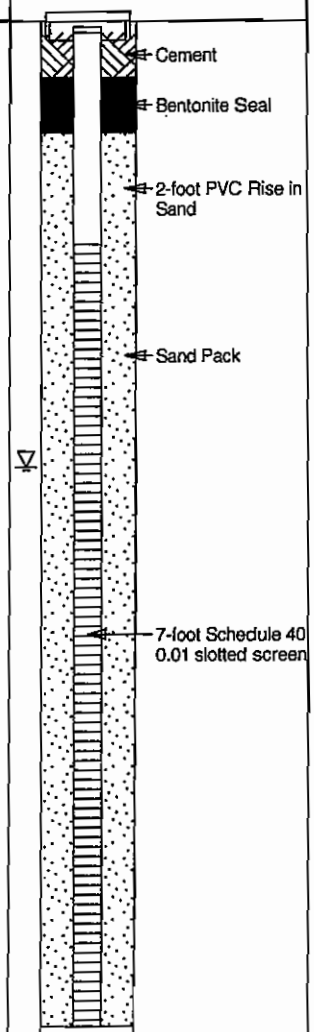

TRC
Wannalancit Mills
650 Suffolk Street
Lowell MA
Telephone: 978-970-5600
Fax: 978-453-1995

BORING/WELL CONSTRUCTION LOG

CLIENT/PROJECT NUMBER City of New Bedford -115058
BORING/WELL NUMBER MW-33
TRC GEOLOGIST J. Saunders
DRILLING CONTRACTOR/FOREMAN NEG/H. Rembijas & S. Perry
DATE DRILLED 10/13/10
LOCATION NBHS - Approx. 5.5-feet west of B-155 double doors
SAMPLING METHOD 48" Macrocore
DRILLING METHOD Direct Push 9100 AMS Track Rig
NOTES No Samples

SCREEN TYPE/SLOT Sch. 40 10-slot PVC
FILTER PACK TYPE Sand
SEAL TYPE Bentonite
DEPTH TO WATER (Approximate Feet) 4.5
TOTAL DEPTH (Feet) 10
GROUND ELEVATION (Feet)
REFERENCE ELEVATION (Feet)

DEPTH (ft. BGL)	BLOW COUNTS	PEN/REC (INCHES)	CORE #	GRAPHIC LOG	LITHOLOGIC DESCRIPTION	Field Testing (ppm)	SAMPLE ID/ TIME
		48/29	S-1		0-5" Cored CONCRETE (with black vapor barrier).	0.4	
1					5-29" Dark-tan to reddish-brown fine SAND, little silt and medium-coarse sand, trace fine-coarse gravel, very slightly moist, no odor, no staining.		
2							
3							
4		48/48	S-2		0-28" Dark-brown fine SAND, trace-little medium-coarse sand, trace silt and fine-coarse gravel, moist to wet, no staining, slight organic odor.	0.0	
5							
6							
					28-29" Thin dark-brown layer of SILT.		
7					29-48" Gray fine SAND and SILT, trace fine gravel, wet, no staining, slight organic odor.		
8		24/12	S-3		0-12" Gray fine SAND and SILT, trace fine gravel, wet, no staining, slight organic odor.	0.0	
9							
10					End of Boring @ 10-feet		

WELL DIAGRAM

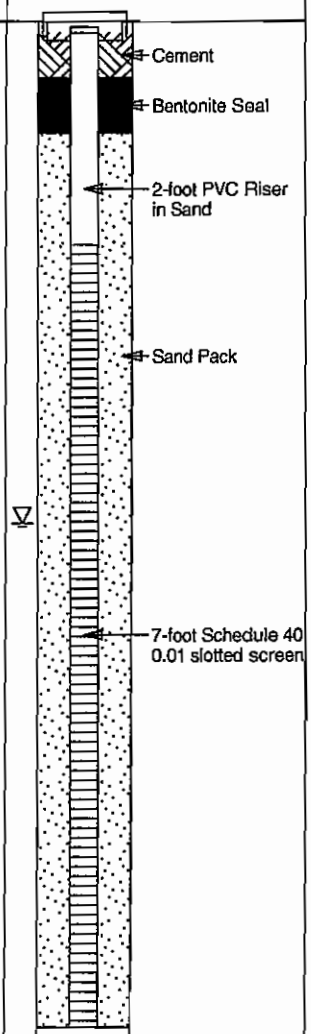

APPENDIX D

GROUNDWATER MONITORING SAMPLING LOGS

TRC

Low-flow Groundwater Sampling Data Record

Project:	Project No.:	Date/Time:	Sheet 1 of 1
City of NB-NBHS	115058	9/13/10 1440	

TRC Personnel: J. Grundy

Well Identification: MW-4

WELL INTEGRITY

	YES	NO
Protect. Casing Secure	X	
Concrete Collar Intact	X	
PVC Stick-up Intact	X	
Well Cap Present		X
Security Lock Present		X

No plug.

PID SCREENING MEAS.

Background	0.0
Well Mouth	0.5 ppm

Protective Casing Stick-up (from ground): Flush ft.

Riser Stick-up (from ground): _____ ft.

WELL DIAMETER: 2 inch / 4 inch / 6 inch / X 1"

WELL MATERIAL: X PVC / SS / ___

Well Depth: 11.32 ft. X top of riser / top of casing / measured / X historical

Water Depth: 4.47 ft.

LNAPL/DNAPL Depth = N/A

Thickness =

LOW FLOW DATA

Depth of pump intake: 8'

Static water level after pump put into well: 4.47'

Initial purge Rate/ Water Level (100-400 ml/min): 22 ml/min, 4.47'

Adjusted purge Rates/time/WL(record changes): 60 ml/min, 4.52' @ 1525

Flow rate at time of sampling: 60 ml/min

*slope not working well, but it appears to be about 4.50' & not dropping down

FIELD WATER QUALITY MEASUREMENTS (record at 3-5 minute intervals)

Time	1448	1506	1514	1520	1527*		1612	1629	1700	
Temp. (C)	Filling	20.68	20.50	20.43	20.07	Letting	Pulled			
Conduct. (µmhos/cm)	YSI	0.421	0.413	0.412	0.414	purge,	intake			
DO (mg/l)		1.41	1.11	0.92	0.78	dropping	up a			
pH (Std. Units)		4.92	4.91	4.91	4.90	YSI	foot to			
Eh (millivolts)		290.2	299.0	299.9	290.1	Turbidity	by direction			
Turb. (NTU)		701	872	1060	612	still	of Al Leonard,	558	182	
Flow (ml/min)		22	22	22	60	very	(now @			
Depth To Water (ft)		4.47	4.47	4.47	4.50'	high	7' deep).			
Time										
Temp. (C)	Sampling - Al Leonard says it is									
Conduct. (µmhos/cm)	okay to sample now due to time &									
DO (mg/l)	slowly dropping turbidity.									
pH (Std. Units)										
Eh (millivolts)										
Turb. (NTU)										
Flow (ml/min)										
Depth To Water (ft)										

Pump Type	Purge	Sample
Peristaltic Pump		
Submersible Pump		
Bladder Pump	X	X
Other: _____		

Description of Sampling Equipment and Flow Rate: YSI 600XL Sonde w/ 650 MDS Display, LaMotte 2020 Turbidimeter, Solinst WLM 101 (Slope), MP15 controller w/ CO_2 gas, Micropurge 0.75" bladder pump, dedicated tubing

Analytical Parameter	Filtered (Y/N)	Preservation	Volume	Time Collected	Sample #	Case #
VOCs	N	HCl	2x40mL VOAs	1700	MW-4	

K:\geosci\fieldforms\lowflowrecord.ppt

Signed: James A. Grundy

Rev: 1 Feb 2007

TRC

Low-flow Groundwater Sampling Data Record

Project:	Project No.:	Date/Time:	Sheet 1 of 1
City of NB-NBITS	115058	9/10/10 1230	

TRC Personnel: J. Grundy

Well Identification: MW-5

WELL INTEGRITY

	YES	NO
Protect. Casing Secure	X	
Concrete Collar Intact	X	
PVC Stick-up Intact	X	
Well Cap Present		X
Security Lock Present		X

No plug - gloves used as plug

Protective Casing Stick-up (from ground) Flush ft.

Riser Stick-up (from ground) _____ ft.

WELL DIAMETER: 2 inch; 4 inch; 6 inch; X 1"

WELL MATERIAL: X PVC; SS; ___

Well Depth 10.90 ft. X top of riser; top of casing; measured; X historical

Water Depth 4.19 ft.

LNAPL/DNAPL Depth = N/A

Thickness =

LOW FLOW DATA

Depth of pump intake: ~~7.6'~~ 7.5'

Static water level after pump put into well 4.12'

Initial purge Rate/ Water Level (100-400 ml/min): 24 ml/min ~~4.30'~~ 4.30'

Adjusted purge Rates/time/WL(record changes)

Flow rate at time of sampling: 24 ml/min.

PID SCREENING MEAS.

Background	0.0
Well Mouth	0.0

FIELD WATER QUALITY MEASUREMENTS (record at 3-5 minute intervals)

Time	1240	1252	1308	1313		1343	1348	1353	1358	1403
Temp. (C)	Started	Filling	30.71	30.73	Helped	30.41	30.40	30.33	30.31	30.31
Conduct. (µmhos/cm)	pump -	up	0.477	0.474	bailed	0.463	0.462	0.462	0.462	0.462
DO (mg/l)	very	YSI	1.68	1.48	down	0.84	0.77	0.77	0.75	0.72
pH (Std. Units)	turbid,		6.28	6.27	pump	6.27	6.27	6.27	6.28	6.28
Eh (millivolts)	letting		-4.8	-7.8	water-	-27.1	-28.9	-31.6	-32.6	-34.3
Turb. (NTU)	clear		~~2992.9~~	84.1	continued	48.5	40.9	37.6	33.1	31.2
Flow (ml/min)	out		24	24	purging	24	24	24	24	24
Depth To Water (ft)			4.40	4.40	w/no	4.40	4.40	4.40	4.40	4.40
					readings					

Time	1408	1413	1418	1423	1428	1433	Sampling @	1445	
Temp. (C)	30.27	30.25	30.20	30.08	29.99	29.88	Turbidity stabilized @ 2 hrs		
Conduct. (µmhos/cm)	0.462	0.462	0.462	0.462	0.462	0.462	of purging done.		
DO (mg/l)	0.71	0.70	0.66	0.65	0.65	0.64			
pH (Std. Units)	6.28	6.28	6.28	6.28	6.28	6.28			
Eh (millivolts)	-35.6	-36.4	-37.4	-38.1	-38.6	-39.2			
Turb. (NTU)	31.6	26.1	26.8	23.7	26.6	25.4			
Flow (ml/min)	24	24	24	24	24	24			
Depth To Water (ft)	4.40	4.40	4.40	4.40	4.40	4.40			

Pump Type	Purge	Sample
Peristaltic Pump		
Submersible Pump		
Bladder Pump	X	X
Other: _____		

Description of Sampling Equipment and Flow Rate: YSI 600XL Sonde w/ 650 MDS Display, LaMotte 2020 Turbidimeter, Solinst WLM 101 (Slope), MP15 controller w/ CO_2 gas, Micropurge 3/4" bladder pump, dedicated tubing.

Analytical Parameter	Filtered (Y/N)	Preservation	Volume	Time Collected	Sample #	Case #
VOCs	N	HCl	2x40mL VOAs	1445	MW-5	
TOC	N	H_2SO_4	2x40mL VOAs	1445	MW-5	
Nitrates	N	None	500 mL poly	1445	MW-5	
Sulfate	N	None	500 mL poly	1445	MW-5	

K:\geosci\fieldforms\lowflowrecord.ppt

Signed: James A. Grundy

Rev: 1 Feb 2007

TRC

Low-flow Groundwater Sampling Data Record

Project: NBHS | Project No.: 115058 | Date/Time: 9/10/10 1340 | Sheet 1 of 1

TRC Personnel: H Rizza

Well Identification: MW-5D

WELL INTEGRITY

	YES	NO
Protect. Casing Secure	✓	
Concrete Collar Intact	✓	
PVC Stick-up Intact	✓	
Well Cap Present	✓	
Security Lock Present		✓

Protective Casing Stick-up (from ground): Flush ft.

Riser Stick-up (from ground): ____ ft.

WELL DIAMETER: ✓ 2 inch; 4 inch; 6 inch

WELL MATERIAL: ✓ PVC; SS; ____

Well Depth 18.8 ft. ✓ top of riser; top of casing; ____ ✓ measured; historical

5' screen to bottom

Water Depth 3.23 ft. LNAPL/DNAPL Depth = ____ Thickness ____

LOW FLOW DATA

Depth of pump intake: ~~3.23~~ 16.50

Static water level after pump put into well: 3.23

Initial purge Rate/ Water Level (100-400 ml/min): 320

Adjusted purge Rates/time/WL(record changes): @1425 to 240 ml/min / 3.23

Flow rate at time of sampling:

PID SCREENING MEAS.

Background	0.0
Well Mouth	

FIELD WATER QUALITY MEASUREMENTS (record at 3-5 minute intervals)

Time	1405	1415	1425	1435	1445	1455	1505	1510	1515	1520
Temp. (C)	Start	21.28	21.03	21.19	21.11	21.13	21.08	21.07	21.06	21.04
Conduct. (µmhos/cm)	Pump	0.362	0.353	0.354	0.353	0.353	0.353	0.353	0.353	0.352
DO (mg/l)		3.76	2.20	1.63	1.11	0.96	0.86	0.77	0.76	0.74
pH (Std. Units)		5.93	5.83	5.86	5.86	5.85	5.84	5.84	5.84	5.84
Eh (millivolts)		12.3	27.1	27.3	30.2	32.5	36.4	39.1	40.5	42.1
Turb. (NTU)		71.5	61.9	52.6	43.1	32.8	29.6	27.7	27.8	27.6
Flow (ml/min)	320	320	~~3~~240	240	240	240	240	240	240	240
Depth To Water (ft)	3.23	3.23	3.23	3.23	3.23	3.23	3.23	3.23	3.23	3.23
Time										
Temp. (C)										
Conduct. (µmhos/cm)										
DO (mg/l)										
pH (Std. Units)										
Eh (millivolts)										
Turb. (NTU)										
Flow (ml/min)										
Depth To Water (ft)										

Pump Type	Purge	Sample
Peristaltic Pump		
Submersible Pump		
Bladder Pump	✓	✓
Other: ____		

Description of Sampling Equipment and Flow Rate: Sampled w/ bladder pump, YSI, MP 15 w/ CO_2 Gas, Fl, Lanotte 2020, + dedicated tubing.

Analytical Parameter	Filtered (Y/N)	Preservation	Volume	Time Collected	Sample #	Case #
VOCs + TDIS	N	HCl	2x40ml	1525	MW-5D	
Nitrate	N	None	250 ml	↓	↓	
Sulfate	N	None	↓			
TOC	N	H_2SO_4	2x40m	↓	↓	

Signed: H. Rizza

K:\geosci\fieldforms\lowflowrecord.ppt

Rev: 1 Feb 2007

TRC

Low-flow Groundwater Sampling Data Record

Project:	Project No.:	Date/Time:	Sheet
NBHS	115058	1015 9/9/10	1 of 1

TRC Personnel: H. Lizza

Well Identification: MW-7

WELL INTEGRITY

	YES	NO
Protect. Casing Secure	✓	
Concrete Collar Intact	✓	
PVC Stick-up Intact	✓	
Well Cap Present	✓	
Security Lock Present		✓

Protective Casing Stick-up (from ground): Flush ft.

Riser Stick-up (from ground): _____ ft.

WELL DIAMETER: ✓ 2 inch; 4 inch; 6 inch

WELL MATERIAL: ✓ PVC; SS; ___

Well Depth: 15.88 ft. ✓ top of riser; top of casing; ___ ✓ measured; historical

Water Depth: 10.65 ft.

LNAPL/DNAPL Depth = _____

Thickness =

LOW FLOW DATA

Depth of pump intake: 13.26 / 14.50

Static water level after pump put into well: 10.10

Initial purge Rate/ Water Level (100-400 ml/min): 50 ml/min

Adjusted purge Rates/time/WL(record changes): 40 ml/min @ 1124 / 12.68'

Flow rate at time of sampling: 40 ml/min

PID SCREENING MEAS.

Background	0.0
Well Mouth	4.0 ppm

FIELD WATER QUALITY MEASUREMENTS (record at 3-5 minute intervals)

Time	1045	1050	1100	*1105	1110	1120	1125	1130	1135	1140
Temp. (C)	start	19.59	19.21	19.23	18.39	18.75	18.80	18.95	19.24	19.42
Conduct. (µmhos/cm)	pump	0.955	0.954	0.954	0.953	0.954	0.954	0.953	0.953	0.955
DO (mg/l)	well	2.26	1.88	1.83	1.88	1.80	1.72	1.73	1.70	1.70
pH (Std. Units)	was	5.66	5.63	5.54	5.44	5.50	5.57	5.57	5.59	5.50
Eh (millivolts)	drawn	91.7	117.7	145.4	184.9	203.8	209.9	217.9	222.9	250.9
Turb. (NTU)	down	22.0	18.1	16.9	29.1	46.2	49.7	45.2	38.7	31.8
Flow (ml/min)		50	50	50	50	50	40	40	40	40
Depth To Water (ft)		11.48	11.97	12.12	12.47	12.59	12.69	12.69	12.69	12.69
Time	1145	1150	1155	1200	1205	1210	1215	1220	1225	1230
Temp. (C)	19.48	19.39	19.35	19.41	19.41	19.42	19.40	19.39	19.45	19.42
Conduct. (µmhos/cm)	0.955	0.955	0.955	0.956	0.956	0.957	0.957	0.957	0.957	0.957
DO (mg/l)	1.66	1.66	1.61	1.67	1.58	1.60	1.63	1.63	1.63	1.63
pH (Std. Units)	5.51	5.58	5.66	5.56	5.59	5.68	5.71	5.72	5.68	5.69
Eh (millivolts)	254.3	248.7	234.7	248.6	249.7	240.0	227.0	220.0	228.1	231.3
Turb. (NTU)	27.5	22.0	20.6	15.8	14.1	12.1	9.21	6.85	4.98	4.02
Flow (ml/min)	40	40	40	40	40	40	40	40	40	40
Depth To Water (ft)	12.69	12.69	12.69	12.69	12.69	12.69	12.69	12.69	12.69	12.69

Pump Type	Purge	Sample
Peristaltic Pump		
Submersible Pump		
Bladder Pump	✓	✓
Other: _____		

Description of Sampling Equipment and Flow Rate: Sampled w/ bladder pump, YSI, MP15 w/ CO_2 gas, IP, lamotte 2020, + dedicated tubing.

*@1105 - moved pump down to 14.50' - see log book.

Analytical Parameter	Filtered (Y/N)	Preservation	Volume	Time Collected	Sample #	Case #
VOCs + TDIS 1st	N	HCl	2x40ml	1235	MW-7	
Nitrate	N	none	1 250ml			
Sulfate	N	none	1x250ml			
TOC	N	H_2SO_4	2x40ml			

K:\geosci\fieldforms\lowflowrecord.ppt

Signed: H. Lizza

Rev: 1 Feb 2007

TRC

Low-flow Groundwater Sampling Data Record

Project: NBHS | Project No.: | Date/Time: 1315 9/9/10 | Sheet 1 of 1

TRC Personnel: H. Rizza

Well Identification: MW-7D

WELL INTEGRITY

	YES	NO
Protect. Casing Secure	✓	
Concrete Collar Intact	✓	
PVC Stick-up Intact	✓	
Well Cap Present	✓	
Security Lock Present		✓

Protective Casing Stick-up (from ground): Flush ft.

Riser Stick-up (from ground): _____ ft.

WELL DIAMETER: ✓ 2 inch; 4 inch; 6 inch

WELL MATERIAL: ✓ PVC; SS; ___

Well Depth: 30.35 ft. ✓ top of riser; top of casing; ✓ measured; historical

10' screen

Water Depth: 10.58 ft. LNAPL/DNAPL Depth = ____ Thickness = ____

LOW FLOW DATA

Depth of pump intake: 25.00'

Static water level after pump put into well: 10.60

Initial purge Rate/ Water Level (100-400 ml/min): ~~180~~ 160

Adjusted purge Rates/time/WL(record changes): NA

Flow rate at time of sampling: 160 ml/min

PID SCREENING MEAS.

Background	0.0
Well Mouth	

FIELD WATER QUALITY MEASUREMENTS (record at 3-5 minute intervals)

Time	1320	1335	1340	1345	1350	1355	1400	1405	1410	1415
Temp. (C)	Start	16.86	16.81	16.53	16.50	16.45	16.45	16.39	16.41	16.42
Conduct. (µmhos/cm)	Pump	0.681	0.680	0.654	0.647	0.636	0.627	0.615	0.614	0.613
DO (mg/l)		1.53	1.55	1.30	1.25	1.24	1.20	1.10	1.18	1.11
pH (Std. Units)	5.67	~~4.5~~	5.59	5.62	5.58	5.64	5.70	5.78	5.81	5.84
Eh (millivolts)		-11.5	-6.2	23.3	34.4	41.2	43.0	48.5	47.9	47.4
Turb. (NTU)	10.98		22.6	43.9	49.1	39.9	38.1	33.1	30.0	26.4
Flow (ml/min)	180	160	160	160	160	160	160	160	160	160
Depth To Water (ft)	10.60	10.60	10.60	10.60	10.60	10.60	10.60	10.60	10.60	10.60

Time	1420	1425	1430	1435	1440	1445				
Temp. (C)	16.45	16.41	16.40	16.43	16.39	16.40				
Conduct. (µmhos/cm)	0.611	0.611	0.610	0.609	0.605	0.606				
DO (mg/l)	1.05	1.15	1.10	1.01	1.06	1.03				
pH (Std. Units)	5.85	5.85	5.87	5.89	5.88	5.88				
Eh (millivolts)	49.3	49.9	51.1	52.0	53.5	54.2				
Turb. (NTU)	25.5	26.0	25.0	26.5	25.6	25.0				
Flow (ml/min)	160	160	160	160	160	160				
Depth To Water (ft)	10.60	10.60	10.60	10.60	10.60	10.60				

Pump Type	Purge	Sample
Peristaltic Pump		
Submersible Pump		
Bladder Pump	✓	✓
Other:		

Description of Sampling Equipment and Flow Rate: Sampled w/ bladder pump, YSI, MP15 w/ CO_2 Gas, IR Lamotte 2020 + Dedicated tubing.

Analytical Parameter	Filtered (Y/N)	Preservation	Volume	Time Collected	Sample #	Case #
VOC + TO15 list		HCl	2x40ml	1450	MW-7D	DUP-
Sulfate		None	250 ml	↓	↓	called MW-701
Nitrate		None	"			@1350
TOC			2x40ml	↓	↓	

K:\geosci\fieldforms\lowflowrecord.ppt

Signed: H. Rizza

Rev: 1 Feb 2007

TRC

Low-flow Groundwater Sampling Data Record

Project:	Project No.:	Date/Time:	Sheet
NBHS	115058	1150 9/13/10	1 of 1

TRC Personnel: H Rizza

Well Identification: MW-11

WELL INTEGRITY

	YES	NO
Protect. Casing Secure	✓	
Concrete Collar Intact	✓	
PVC Stick-up Intact	✓	
Well Cap Present	✓	
Security Lock Present		✓

Protective Casing Stick-up (from ground): FLUSH ft.

Riser Stick-up (from ground): _____ ft.

Well Depth: 10.62 ft. ✓ top of riser ☐ top of casing ☐ _____ ✓ measured ☐ historical

Water Depth: 3.30 ft.

LNAPL/DNAPL Depth = _____

Thickness = _____

WELL DIAMETER ✓ 2 inch ☐ 4 inch ☐ 6 inch ☐

WELL MATERIAL ✓ PVC ☐ SS ☐ ___

LOW FLOW DATA

Depth of pump intake: 6.88

Static water level after pump put into well: 3.19

Initial purge Rate/ Water Level (100-400 ml/min): 60 ml/min

Adjusted purge Rates/time/WL(record changes): NA

Flow rate at time of sampling: 60 ml/min

PID SCREENING MEAS.

Background	0.0
Well Mouth	0.0

FIELD WATER QUALITY MEASUREMENTS (record at 3-5 minute intervals)

Time	1205	1215	1235	1245	1255	1305	1310	1315	1320
Temp. (C)		21.83	21.91	22.02	22.14	22.13	22.16	22.14	22.12
Conduct. (µmhos/cm)	Start	0.383	0.378	0.384	0.391	0.403	0.405	0.408	0.409
DO (mg/l)	Pump	1.65	1.13	1.05	1.09	1.04	1.01	0.98	1.01
pH (Std. Units)		6.41	6.37	6.35	6.34	6.31	6.31	6.31	6.31
Eh (millivolts)		-32.2	34.1	-34.4	-35.4	-34.4	-34.9	-34.6	-34.6
Turb. (NTU)		125	63.2	45.5	30.2	24.3	23.5	23.3	23.5
Flow (ml/min)		60	60	60	60	60	60	60	60
Depth To Water (ft)		3.38	3.38	3.38	3.38	3.38	3.38	3.38	3.38
Time									
Temp. (C)									
Conduct. (µmhos/cm)									
DO (mg/l)									
pH (Std. Units)									
Eh (millivolts)									
Turb. (NTU)									
Flow (ml/min)									
Depth To Water (ft)									

Pump Type	Purge	Sample
Peristaltic Pump	☐	☐
Submersible Pump	☐	☐
Bladder Pump	✓	✓
Other: _____	☐	☐

Description of Sampling Equipment and Flow Rate: Sampled w/ bladder pump, YST, MP15 w/ CO_2 Gas, IP, Lamotte 2020, + dedicated tubing

Analytical Parameter	Filtered (Y/N)	Preservation	Volume	Time Collected	Sample #	Case #
VOCs + TO15	N	HCl	2x40ml	1325	MW-11	
List						

K:\geosci\fieldforms\lowflowrecord.ppt

Signed: H Rizza

Rev: 1 Feb 2007

TRC

Low-flow Groundwater Sampling Data Record

Project:	Project No.:	Date/Time:	Sheet
NBHS	115058	9/13/10 1400	1 of 1

TRC Personnel: H. Lizza

Well Identification: MW-18

WELL INTEGRITY

	YES	NO
Protect. Casing Secure	✓	
Concrete Collar Intact	✓	
PVC Stick-up Intact	✓	
Well Csp Present	✓	
Security Lock Present		✓

Protective Casing Stick-up (from ground): Flush ft.

Riser Stick-up (from ground): _____ ft.

WELL DIAMETER: ✓ 2 inch; 4 inch; 6 inch

WELL MATERIAL: ✓ PVC; SS; ___

Well Depth 10.30 ft. ✓ top of riser; top of casing; ___ ✓ measured; historical

Water Depth 3.33 ft.

LNAPL/DNAPL Depth = _____

Thickness =

LOW FLOW DATA

Depth of pump intake: 6.88

Static water level after pump put into well: 3.23

Initial purge Rate/Water Level (100-400 ml/min): 85 ml/min

Adjusted purge Rates/time/WL(record changes): @ 1438 to 50 ml/min @ 4.14'

Flow rate at time of sampling: 50 ml/min

PID SCREENING MEAS.

Background	0.0
Well Mouth	0.0

FIELD WATER QUALITY MEASUREMENTS (record at 3-5 minute intervals)

Time	1420	1435	1440	1445	1450	1455	1500	1505		
Temp. (C)		22.84	22.84	22.69	22.62	22.64	22.64	22.65		
Conduct. (µmhos/cm)	start	0.349	0.350	0.350	0.350	0.351	0.351	0.352		
DO (mg/l)	pump	2.01	1.83	1.53	1.43	1.36	1.37	1.36		
pH (Std. Units)		6.45	6.45	6.42	6.43	6.44	6.44	6.44		
Eh (millivolts)		153.1	166.7	188.5	194.7	196.8	196.2	197.0		
Turb. (NTU)	220	14.0	11.62	9.10	7.63	5.24	4.12	3.03		
Flow (ml/min)	85	85	50	50	50	50	50	50		
Depth To Water (ft)		4.10	4.16	4.16	4.16	4.16	4.16	4.16		
Time										
Temp. (C)										
Conduct. (µmhos/cm)										
DO (mg/l)										
pH (Std. Units)										
Eh (millivolts)										
Turb. (NTU)										
Flow (ml/min)										
Depth To Water (ft)										

Pump Type	Purge	Sample
Peristaltic Pump		
Submersible Pump		
Bladder Pump	✓	✓
Other: _____		

Description of Sampling Equipment and Flow Rate: Sampled w/ bladder pump, YSI, MP15 w/ CO_2 Gas, IP, Lamotte 2020 + dedicated tubing.

Analytical Parameter	Filtered (Y/N)	Preservation	Volume	Time Collected	Sample #	Case #
VOCs + TOLS list	N	HCl	2x 40ml	1510	MW-18	

K:\geosci\fieldforms\lowflowrecord.ppt

Signed: [signature]

Rev: 1 Feb 2007

TRC

Low-flow Groundwater Sampling Data Record

Project:	Project No.:	Date/Time: 0910	Sheet 1 of 1
NBHS	115058	9/10/10	

TRC Personnel: H. Rizza

Well Identification: MW-20

WELL INTEGRITY

	YES	NO
Protect. Casing Secure	✓	
Concrete Collar Intact	✓	
PVC Stick-up Intact	✓	
Well Cap Present	✓	
Security Lock Present		✓

Protective Casing Stick-up (from ground): Flush ft.

Riser Stick-up (from ground): _____ ft.

WELL DIAMETER: ✓ 2 inch; 4 inch; 6 inch

WELL MATERIAL: ✓ PVC; SS; ___

Well Depth 21.40 ft. ✓ top of riser; top of casing; ___ ✓ measured; historical

Water Depth 15.10 ft. LNAPL/DNAPL Depth = _____ Thickness =

LOW FLOW DATA

Depth of pump intake: 18.

Static water level after pump put into well: 15.

Initial purge Rate/ Water Level (100-400 ml/min): 160

Adjusted purge Rates/time/WL(record changes): NA

Flow rate at time of sampling: 160 ml/min

PID SCREENING MEAS.

Background	
Well Mouth	

FIELD WATER QUALITY MEASUREMENTS (record at 3-5 minute intervals)

Time	0930	0940	0945	0950	0955	1000	1005	1010	1015	1020
Temp. (C)	started	17.77	17.74	17.76	17.72	17.69	17.68	17.65	17.68	17.68
Conduct. (µmhos/cm)	pump	0.623	0.607	0.602	0.597	0.593	0.587	0.584	0.583	0.581
DO (mg/l)		2.13	1.54	1.51	1.27	1.16	1.17	1.11	1.13	1.12
pH (Std. Units)		6.29	6.16	6.11	6.08	6.07	6.08	6.07	6.07	6.07
Eh (millivolts)		182.7	205.7	213.9	225.0	225.5	223.7	221.3	219.3	218.2
Turb. (NTU)	45.0	24.2	21.2	17.6	14.9	9.51	9.45	9.70	9.25	7.10
Flow (ml/min)	~~160~~ 160	160	160	160	160	160	160	160	160	160
Depth To Water (ft)	15.39	15.35	15.35	15.35	15.35	15.35	15.35	15.35	15.35	15.35

Time	1025
Temp. (C)	17.67
Conduct. (µmhos/cm)	0.580
DO (mg/l)	1.11
pH (Std. Units)	6.07
Eh (millivolts)	216.9
Turb. (NTU)	4.85
Flow (ml/min)	160
Depth To Water (ft)	15.35

Pump Type	Purge	Sample
Peristaltic Pump		
Submersible Pump		
Bladder Pump	✓	✓
Other: _____		

Description of Sampling Equipment and Flow Rate: Sampled w/ bladder pump, YSI MP15 w/ CO_2, IP, Lamotte 2020, + dedicated tubing.

Analytical Parameter	Filtered (Y/N)	Preservation	Volume	Time Collected	Sample #	Case #
VOC + TO 15 list	N	HCl	2 x 40ml	1030	MW-20	

K:\geosci\fieldforms\lowflowrecord.ppt

Signed: H. Rizza

Rev: 1 Feb 2007

TRC

Low-flow Groundwater Sampling Data Record

Project:	Project No.:	Date/Time:	Sheet 1 of 1
City of NB - NBits	115058	9/13/10 1150	

TRC Personnel: J. Grundy

Well Identification: MW-21

WELL INTEGRITY

	YES	NO
Protect. Casing Secure	X	
Concrete Collar Intact	X	
PVC Stick-up Intact	X	
Well Cap Present	X	
Security Lock Present		X

Protective Casing Stick-up (from ground): Flush ft.

Riser Stick-up (from ground): _____ ft.

WELL DIAMETER: [X] 2 inch [ ] 4 inch [ ] 6 inch

WELL MATERIAL: [X] PVC [ ] SS [ ]

Well Depth 19.31 ft. [X] top of riser [ ] top of casing [ ] measured [X] historical

Water Depth 12.05 ft. LNAPL/DNAPL Depth = N/A Thickness =

JSG → ~~Sheen of on purge water~~

LOW FLOW DATA

Depth of pump intake: 15.75'

Static water level after pump put into well: 12.02'

Initial purge Rate/ Water Level (100-400 ml/min): 100 ml/min, 12.10'

Adjusted purge Rates/time/WL(record changes)

Flow rate at time of sampling: 100 ml/min

PID SCREENING MEAS.

Background	0.0
Well Mouth	0.0

FIELD WATER QUALITY MEASUREMENTS (record at 3-5 minute intervals)

Time	1156	1204	1209	1214	1219	1224	1229	1234	1239	1244
Temp. (C)	Filling	20.43	20.45	20.48	20.53	20.58	20.68	20.78	20.89	20.99
Conduct. (µmhos/cm)	YSI	0.890	0.886	0.874	0.866	0.881	0.903	0.918	0.930	0.935
DO (mg/l)		2.13	1.91	1.87	1.85	1.74	1.64	1.55	1.48	1.44
pH (Std. Units)		5.88	5.65	5.58	5.55	5.53	5.50	5.49	5.47	5.46
Eh (millivolts)		133.6	165.9	186.2	198.9	209.6	216.8	222.0	225.8	228.8
Turb. (NTU)		39.0	29.4	28.3	19.1	14.7	12.5	10.76	9.22	7.58
Flow (ml/min)		100	100	100	100	100	100	100	100	100
Depth To Water (ft)		12.13	12.14	12.14	12.14	12.14	12.14	12.14	12.14	12.14

Time	1249	1253	1258	1303	Sampling - turbidity & other parameters stable.					
Temp. (C)	21.15	21.22	21.17	21.11						
Conduct. (µmhos/cm)	0.937	0.939	0.940	0.938						
DO (mg/l)	1.41	1.38	1.36	1.35						
pH (Std. Units)	5.46	5.45	5.44	5.44						
Eh (millivolts)	230.9	233.9	237.5	239.5						
Turb. (NTU)	7.65	8.12	8.91	8.34						
Flow (ml/min)	100	100	100	100						
Depth To Water (ft)	12.14	12.14	12.14	12.14						

Pump Type	Purge	Sample
Peristaltic Pump		
Submersible Pump		
Bladder Pump	X	X
Other: _____		

Description of Sampling Equipment and Flow Rate:

YSI 600XL Sonde w/ 650 MDS Display, LaMotte 2020 Turbidimeter, Solinst WL M101 (slope), MP15 controller w/ CO_2 gas, Micropurge 1.75" bladder pump, dedicated tubing.

Analytical Parameter	Filtered (Y/N)	Preservation	Volume	Time Collected	Sample #	Case #
VOCs	N	HCl	2x40 mL VOAs	1310	MW-21	
				~~1310~~		

K:\geosci\fieldforms\lowflowrecord.ppt

Signed: James J. Grundy

Rev: 1 Feb 2007

TRC

Low-flow Groundwater Sampling Data Record

Project:	Project No.:	Date/Time:	Sheet 1 of 1
City of NB-NBHS	115058	9/13/10 0930	

TRC Personnel: J. Grundy

Well Identification: MW-22

WELL INTEGRITY

	YES	NO
Protect. Casing Secure	X	
Concrete Collar Intact	X	
PVC Stick-up Intact	X	
Well Cap Present	X	
Security Lock Present		X

Protective Casing Stick-up (from ground): Flush ft.

Riser Stick-up (from ground): _____ ft.

WELL DIAMETER: [X] 2 inch [ ] 4 inch [ ] 6 inch [ ]

WELL MATERIAL: [X] PVC [ ] SS [ ]

Well Depth 13.48 ft. [X] top of riser [ ] top of casing [ ] [ ] measured [X] historical

Water Depth 10.42 ft. LNAPL/DNAPL Depth = N/A → sheen on purge water

Thickness =

LOW FLOW DATA

Depth of pump intake: 11.50'

Static water level after pump put into well: 10.03'

Initial purge Rate/ Water Level (100-400 ml/min): 84 ml/min, 10.63' dropping

Adjusted purge Rates/time/WL(record changes): ~30 ml/min, 11.00' @ 0950 ; 84 ml/min, 11.00' @ 1006 ~60 ml/min, 11.15' @ 1010

Flow rate at time of sampling: 60 ml/min

PID SCREENING MEAS.

Background	0.0
Well Mouth	15.2 ppm

FIELD WATER QUALITY MEASUREMENTS (record at 3-5 minute intervals)

Time	0945	0953	0958	1003	1008	1013	1018	1023	1028	1033
Temp. (C)	filling	18.18	18.50	18.66	18.60	18.12	18.13	18.15	18.17	18.39
Conduct. (µmhos/cm)	YSI	1.158	1.128	1.116	1.112	1.098	1.089	1.083	1.081	1.079
DO (mg/l)		1.01	0.91	0.73	0.68	0.57	0.50	0.42	0.40	0.39
pH (Std. Units)		6.46	6.45	6.45	6.45	6.44	6.44	6.44	6.44	6.44
Eh (millivolts)		-100.6	-96.2	-92.4	-89.7	-87.0	-85.9	-85.6	-85.6	-85.6
Turb. (NTU)		56.7	58.7	51.9	46.5	46.1	39.9	31.1	27.0	23.2
Flow (ml/min)		~~27~~ 30	30	30	84	60	60	60	60	60
Depth To Water (ft)		11.00	11.00	11.00	11.10	11.19	11.24	11.28	11.28	11.29

warming due to sun coming out

Time	1038	1043	1048	1053	1058	Sampling -				
Temp. (C)	18.56	18.60	18.55	18.50	18.43	Turbidity stabilizing,				
Conduct. (µmhos/cm)	1.078	1.074	1.071	1.066	1.063	other parameters stable.				
DO (mg/l)	0.37	0.37	0.35	0.33	0.34					
pH (Std. Units)	6.43	6.42	6.40	6.37	6.37					
Eh (millivolts)	-85.1	-84.2	-82.7	-81.1	-79.8					
Turb. (NTU)	20.0	16.8	15.4	14.9	15.1					
Flow (ml/min)	60	60	60	60	60					
Depth To Water (ft)	11.29	11.29	11.29	11.29	11.29					

Pump Type	Purge	Sample
Peristaltic Pump		
Submersible Pump		
Bladder Pump	X	X
Other: _____		

Description of Sampling Equipment and Flow Rate: YSI 600XL Sonde w/ 650 MDS Display, LaMotte 2020 Turbidimeter, Solinst WLM 101 (slope), MP15 controller w/ CO_2 gas, Sample Pro Micropurge ~~1.5"~~ 1.75" bladder ~~pump~~ pump, dedicated tubing.

Analytical Parameter	Filtered (Y/N)	Preservation	Volume	Time Collected	Sample #	Case #
VOCs	N	HCl	2x 40mL VOAs	1110	MW-22	

K:\geosci\fieldforms\lowflowrecord.ppt

Signed: James A. Grundy

Rev: 1 Feb 2007

TRC

Low-flow Groundwater Sampling Data Record

Project: NBHS | Project No.: 115058 | Date/Time: 9/13/10 0915 | Sheet 1 of 1

TRC Personnel: H. Rizza

Well Identification: MW-23

WELL INTEGRITY

	YES	NO
Protect. Casing Secure	✓	
Concrete Collar Intact	✓	
PVC Stick-up Intact	✓	
Well Cap Present	✓	
Security Lock Present		✓

Protective Casing Stick-up (from ground): Flush ft.

Riser Stick-up (from ground): _____ ft.

WELL DIAMETER: ✓ 2 inch; 4 inch; 6 inch

WELL MATERIAL: ✓ PVC; SS; ___

Well Depth 11.45 ft. ✓ top of riser; top of casing; ___ ✓ measured; historical

Water Depth 8.94 ft.

LNAPL/DNAPL Depth = _____

Thickness =

LOW FLOW DATA

Depth of pump intake: 10.20

Static water level after pump put into well 8.85

Initial purge Rate/ Water Level (100-400 ml/min): 60 ml/min

Adjusted purge Rates/time/WL(record changes) 1020 40 ml/min / 9.78

Flow rate at time of sampling:

PID SCREENING MEAS.

Background	0.0
Well Mouth	0.0

FIELD WATER QUALITY MEASUREMENTS (record at 3-5 minute intervals) 1005 * 1010 * 1020

Time	0930	0945	0955	~~0950~~	~~1015~~	~~1015~~	1025	1030	1035	1040
Temp. (C)	Start	17.56	17.56	17.54	17.54	18.07	18.10	18.21	18.30	18.29
Conduct. (µmhos/cm)	pump	1.099	1.108	1.109	1.110	1.109	1.110	1.109	1.109	1.109
DO (mg/l)		2.59	2.25	2.21	2.14	2.23	2.24	2.29	2.30	2.34
pH (Std. Units)		6.22	6.27	6.28	6.30	6.35	6.34	6.33	6.32	6.33
Eh (millivolts)		-73.8	-68.3	-67.3	-65.9	-67.3	-66.5	-63.0	-61.2	-60.8
Turb. (NTU)	558	77.6	105.0	83.7	52.0	42.7	37.3	37.4	36.8	37.2
Flow (ml/min)	60	60	60	60	60	60	60	60	60	60
Depth To Water (ft)		9.28	9.72	9.85	9.98	9.75	9.80	9.80	9.80	9.80
Time										
Temp. (C)										
Conduct. (µmhos/cm)										
DO (mg/l)										
pH (Std. Units)										
Eh (millivolts)										
Turb. (NTU)										
Flow (ml/min)										
Depth To Water (ft)										

Pump Type	Purge	Sample
Peristaltic Pump		
Submersible Pump		
Bladder Pump	✓	✓
Other: _____		

Description of Sampling Equipment and Flow Rate:

Sampled w/ bladder pump, YSI, IP, Lamotte 2020, Mn 15 w/ ZOZ + dedicated tubing

*Shut off pump @ 1015 to let recharge.

Analytical Parameter	Filtered (Y/N)	Preservation	Volume	Time Collected	Sample #	Case #
VOCs + TO15 list	N	HCl	2 x 40ml	1645	MW-23	

K:\geosci\fieldforms\lowflowrecord.ppl

Signed: H. Rizza

Rev: 1 Feb 2007

TRC

Low-flow Groundwater Sampling Data Record

Project: NBHS | Project No.: 115058 | Date/Time: 9/10/10 1050 | Sheet 1 of 1

TRC Personnel: H. Rizza

Well Identification: MW-24

WELL INTEGRITY

	YES	NO
Protect. Casing Secure	✓	
Concrete Collar Intact	✓	
PVC Stick-up Intact	✓	
Well Cap Present	✓	
Security Lock Present		✓

Protective Casing Stick-up (from ground): FLUSH ft.

Riser Stick-up (from ground): ____ ft.

Well Depth: 13.60 ft. ✓ top of riser ☐ top of casing ☐ ____ ✓ measured ☐ historical

Water Depth: 9.20 ft.

LNAPL/DNAPL Depth = ____

Thickness = ____

LOW FLOW DATA

Depth of pump intake: 11.40

Static water level after pump put into well: 9.10

Initial purge Rate/ Water Level (100-400 ml/min): 80 ml/min

Adjusted purge Rates/time/WL(record changes): NA

Flow rate at time of sampling: 80 ml/min

WELL DIAMETER: ✓ 2 inch ☐ 4 inch ☐ 6 inch ☐ ____

WELL MATERIAL: ✓ PVC ☐ SS ☐ ____

PID SCREENING MEAS.

Background	0.0
Well Mouth	0.0

FIELD WATER QUALITY MEASUREMENTS (record at 3-5 minute intervals)

Time	1125	1140	~~1155~~ 1150	1200	1210	1220	1230	1235	1240	1245
Temp. (C)	start	17.80	17.10	17.25	17.42	17.59	17.18	17.19	17.29	17.21
Conduct. (µmhos/cm)	pump	1.240	1.228	1.210	1.199	1.191	1.189	1.181	1.178	1.178
DO (mg/l)		2.64	2.50	2.22	2.41	2.45	2.63	2.53	2.41	2.44
pH (Std. Units)		5.96	6.03	5.93	5.79	5.67	5.89	5.99	5.97	5.97
Eh (millivolts)		-61.2	-61.1	-58.4	53.0	-47.0	-50.6	-53.9	-53.5	-53.2
Turb. (NTU)	75.0	86.9	70.7	53.0	35.9	27.3	22.0	17.2	15.8	16.3
Flow (ml/min)	80	80	80	80	80	80	80	80	80	80
Depth To Water (ft)	9.50	9.50	9.50	9.50	9.50	9.50	9.50	9.50	9.50	9.50
Time	1250									
Temp. (C)	17.20									
Conduct. (µmhos/cm)	1.177									
DO (mg/l)	2.45									
pH (Std. Units)	5.97									
Eh (millivolts)	-53.1									
Turb. (NTU)	16.0									
Flow (ml/min)	80									
Depth To Water (ft)	9.50									

Pump Type	Purge	Sample
Peristaltic Pump	☐	☐
Submersible Pump	☐	☐
Bladder Pump	✓	✓
Other: ____	☐	☐

Description of Sampling Equipment and Flow Rate: Sampled w/ bladder pump, YSI, MP15 w/ CO_2 gas, Tl, Lamotte 2020 + dedicated tubing.

Analytical Parameter	Filtered (Y/N)	Preservation	Volume	Time Collected	Sample #	Case #
VOC + TO15 list	NO	HCl	2x40ml	1255	MW-24	

K:\geosci\fieldforms\lowflowrecord.ppt

Signed: H. Rizza

Rev: 1 Feb 2007

TRC

Low-flow Groundwater Sampling Data Record

Project:	Project No.:	Date/Time: 0920	Sheet 1 of 1
NBHS	115058	9/8/10	

TRC Personnel: H. Kizza

Well Identification: MW-25

WELL INTEGRITY

	YES	NO
Protect. Casing Secure	✓	
Concrete Collar Intact	✓	
PVC Stick-up Intact	✓	
Well Cap Present	✓	
Security Lock Present		✓

Protective Casing Stick-up (from ground): flush ft.

Riser Stick-up (from ground): _____ ft.

WELL DIAMETER: ✓ 2 inch; 4 inch; 6 inch

WELL MATERIAL: ✓ PVC; SS; ___

Well Depth 15.31 ft. ✓ top of riser; top of casing; ___ ✓ measured; historical

Water Depth 8.12 ft. LNAPL/DNAPL Depth = ____ Thickness =

LOW FLOW DATA

Depth of pump intake: 11.71

Static water level after pump put into well

Initial purge Rate/ Water Level (100-400 ml/min): 280 ml/min

Adjusted purge Rates/time/WL(record changes)

NA

Flow rate at time of sampling: 280 ml/min

PID SCREENING MEAS.

Background	0.0
Well Mouth	0.0

FIELD WATER QUALITY MEASUREMENTS (record at 3-5 minute intervals)

Time	0945	1000	1005	1010	1015	1020	1025	1030	1035	1040
Temp. (C)	start	18.41	18.43	18.40	18.39	18.33	18.34	18.41	18.38	18.38
Conduct. (µmhos/cm)	pump	0.795	0.798	0.798	0.799	0.799	0.799	0.799	0.798	0.798
DO (mg/l)		3.48	2.85	1.75	2.46	2.29	2.28	1.88	1.79	1.70
pH (Std. Units)		6.03	6.00	5.99	6.02	6.05	6.06	6.00	5.99	5.99
Eh (millivolts)		60.7	66.5	69.5	75.9	77.1	78.1	86.8	89.6	88.6
Turb. (NTU)	139	24.8	18.2	13.1	10.22	8.25	6.99	5.20	4.84	4.35
Flow (ml/min)	280	280	280	280	280	280	280	280	280	280
Depth To Water (ft)	8.12	8.12	8.12	8.12	8.12	8.12	8.12	8.12	8.12	8.12
Time										
Temp. (C)										
Conduct. (µmhos/cm)										
DO (mg/l)										
pH (Std. Units)										
Eh (millivolts)										
Turb. (NTU)										
Flow (ml/min)										
Depth To Water (ft)										

Pump Type	Purge	Sample
Peristaltic Pump		
Submersible Pump		
Bladder Pump	✓	✓
Other: ____		

Description of Sampling Equipment and Flow Rate: Sampled w/ bladder pump, YSI 600XLM w/ 650 display, MP15 w/ CO_2 Gas, IP, Lamotte 2020 + dedicated tubing

Analytical Parameter	Filtered (Y/N)	Preservation	Volume	Time Collected	Sample #	Case #
VOCs + TO15 list	N	HCl	2x40ml	1045	MW-25	

K:\geosci\fieldforms\lowflowrecord.ppt

Signed: H. Kizza

Rev: 1 Feb 2007

TRC

Low-flow Groundwater Sampling Data Record

Project:	Project No.:	Date/Time:	Sheet 1 of 1
NBHS	115058	9/8/10 1110	

TRC Personnel: H. Rizza

Well Identification: MW-26

WELL INTEGRITY

	YES	NO
Protect. Casing Secure	✓	
Concrete Collar Intact	✓	
PVC Stick-up Intact	✓	
Well Cap Present	✓	
Security Lock Present		✓

Protective Casing Stick-up (from ground) FLUSH ft.

Riser Stick-up (from ground) _____ ft.

Well Depth 12.40 ft. ✓ top of riser ✓ measured; top of casing; historical

Water Depth 7.04 ft.

LNAPL/DNAPL Depth = _____

Thickness =

WELL DIAMETER ✓ 2 inch; 4 inch; 6 inch

WELL MATERIAL ✓ PVC; SS; ___

PID SCREENING MEAS.

Background	0.0
Well Mouth	0.0

LOW FLOW DATA

Depth of pump intake: 9.72

Static water level after pump put into well 7.00

Initial purge Rate/ Water Level (100-400 ml/min): 120 ml/min

Adjusted purge Rates/time/WL(record changes) NA

Flow rate at time of sampling: 120 ml/min

FIELD WATER QUALITY MEASUREMENTS (record at 3-5 minute intervals)

Time	1120	1135	1140	1150	1200	1210	1220	1225	1230	1245
Temp. (C)		18.24	18.14	18.03	18.17	18.35	18.14	18.13	18.03	18.22
Conduct. (µmhos/cm)	start	1.074	1.059	1.016	0.994	0.974	0.950	0.942	0.935	0.915
DO (mg/l)	pump	1.81	1.62	1.68	1.70	1.77	1.65	1.76	1.73	1.85
pH (Std. Units)		6.07	6.05	5.99	5.97	5.88	5.80	5.81	5.81	5.88
Eh (millivolts)		1.1	-4.5	-8.6	-9.2	-6.9	-1.7	-1.2	-0.9	-1.7
Turb. (NTU)	72.6	156	155	107.0	84.4	65.3	51.4	45.4	41.9	42.8
Flow (ml/min)	120	120	120	120	120	120	120	120	120	120
Depth To Water (ft)	7.30	7.30	7.30	7.30	7.30	7.30	7.30	7.30	7.30	7.30
Time	1250	1255	1300	1305	1310	1315				
Temp. (C)	18.40	18.11	18.03	18.00	17.99	17.98				
Conduct. (µmhos/cm)	0.912	0.907	0.902	0.900	0.899	0.900				
DO (mg/l)	1.78	1.96	1.92	1.99	1.92	1.96				
pH (Std. Units)	5.75	5.73	5.78	5.81	5.81	5.81				
Eh (millivolts)	3.5	6.4	5.3	5.4	4.9	4.7				
Turb. (NTU)	33.8	33.2	34.7	33.0	34.8	33.3				
Flow (ml/min)	120	120	120	120	120	120				
Depth To Water (ft)	7.30	7.30	7.30	7.30	7.30	7.30				

Pump Type	Purge	Sample
Peristaltic Pump		
Submersible Pump		
Bladder Pump	✓	✓
Other: _____		

Description of Sampling Equipment and Flow Rate: Sampled w/ bladder pump, YSI MP15 w/ CO_2 Gas, Fl, Lamotte 2020, + dedicated tubing.

Analytical Parameter	Filtered (Y/N)	Preservation	Volume	Time Collected	Sample #	Case #
VOCs + TO15 15+	N	HCl	2x40ml	1320	MW-26	

K:\geosci\fieldforms\lowflowrecord.ppt

Signed: H. Rizza

Rev: 1 Feb 2007

TRC

Low-flow Groundwater Sampling Data Record

Project:	Project No.:	Date/Time:	Sheet 1 of 1
City of NB-NBITS	115058	9/9/10 1100	

TRC Personnel: J. Grundy

Well Identification: MW-27

WELL INTEGRITY

	YES	NO
Protect. Casing Secure	X	
Concrete Collar Intact	X	
PVC Stick-up Intact	X	
Well Cap Present	X	X
Security Lock Present		X

No plug

PID SCREENING MEAS.

Background	0.0
Well Mouth	0.0

Protective Casing Stick-up (from ground): Flush ft.

Riser Stick-up (from ground): _____ ft.

WELL DIAMETER: 2 inch; 4 inch; 6 inch; X 1"

WELL MATERIAL: X PVC; SS; ___

Well Depth 11.52 ft. X top of riser; top of casing; measured; X historical

Water Depth 4.03 ft.

LNAPL/DNAPL Depth = N/A

Thickness =

LOW FLOW DATA

Depth of pump intake: 7.75'

Static water level after pump put into well: 4.03

Initial purge Rate/ Water Level (100-400 ml/min): 28 mL/min, 4.05'

Adjusted purge Rates/time/WL(record changes)

Flow rate at time of sampling: 28 mL/min

FIELD WATER QUALITY MEASUREMENTS (record at 3-5 minute intervals)

Time	1100	1122	1124	11:35	1142	1147	1152	1157	1202	1207
Temp. (C)	filling	24.43	24.40	24.45	24.48	24.47	24.46	24.44	24.43	24.41
Conduct. (µmhos/cm)	YSI	0.416	0.413	0.411	0.410	0.411	0.411	0.411	0.411	0.411
DO (mg/l)		1.40	1.17	1.11	0.99	0.90	0.84	0.81	0.77	0.76
pH (Std. Units)		6.35	6.34	6.33	6.32	6.32	6.32	6.31	6.31	6.31
Eh (millivolts)		-6.1	-2.7	-0.9	-1.0	-0.1	-0.3	0.6	1.9	3.5
Turb. (NTU)		49.0	43.9	31.0	32.7	31.2	24.3	24.0	20.1	18.9
Flow (ml/min)		28	28	28	28	28	28	28	28	28
Depth To Water (ft)		4.04	4.04	4.04	4.04	4.04	4.04	4.04	4.04	4.04

Time	1212	1217	1222	1227	1232	1237	1242	Sampling @ 1300		
Temp. (C)	24.41	24.41	24.41	24.41	24.41	24.41	24.40	Turbidity stabilized &		
Conduct. (µmhos/cm)	0.411	0.410	0.410	0.410	0.410	0.409	0.409	other parameters stable		
DO (mg/l)	0.74	0.72	0.72	0.70	0.68	0.67	0.66			
pH (Std. Units)	6.31	6.31	6.31	6.30	6.30	6.30	6.30			
Eh (millivolts)	4.7	5.2	4.6	4.9	4.7	4.9	6.0			
Turb. (NTU)	17.6	18.0	16.2	15.2	15.5	16.3	15.6			
Flow (ml/min)	28	28	28	28	28	28	28			
Depth To Water (ft)	4.04	4.04	4.04	4.04	4.04	4.04	4.04			

Pump Type	Purge	Sample
Peristaltic Pump		
Submersible Pump		
Bladder Pump	X	X
Other:		

Description of Sampling Equipment and Flow Rate: YSI 600XL Sonde w/ 650 MDS Display, LaMotte 2020 Turbidimeter, Solinst Water Level model 101 (Slope), MP15 controller w/ CO_2 gas, Sample Pro 3/4" Micropurge bladder pump, dedicated tubing.

Analytical Parameter	Filtered (Y/N)	Preservation	Volume	Time Collected	Sample #	Case #
VOCs	N	HCl	2x40mL VOA	1300	MW-27	
TOC	N	H_2SO_4	2x40mL VOA	1300	MW-27	
Nitrates	N	None	250mL poly	1300	MW-27	
Sulfates	N	None	250mL poly	1300	MW-27	

K:\geosci\fieldforms\lowflowrecord.ppt

Rev: 1 Feb 2007

Signed: James A. Grundy

TRC

Low-flow Groundwater Sampling Data Record

Project:	Project No.:	Date/Time:	Sheet 1 of 2
City of NB-NBHS	115058	9/9/10 1355	

TRC Personnel: J. Grundy

Well Identification: MW-28

WELL INTEGRITY

	YES	NO
Protect. Casing Secure	X	
Concrete Collar Intact	X	
PVC Stick-up Intact	X	
Well Cap Present		X
Security Lock Present		X

No plug

PID SCREENING MEAS.

Background	0.0
Well Mouth	14.0 ppm

Protective Casing Stick-up (from ground): Flush ft.

Riser Stick-up (from ground): _____ ft.

WELL DIAMETER: 2 inch / 4 inch / 6 inch / X 1"

WELL MATERIAL: X PVC / SS / ___

Well Depth 10.12 ft. X top of riser / top of casing / measured / X historical

Water Depth 4.17 ft.

LNAPL/DNAPL Depth = N/A

Thickness =

LOW FLOW DATA

Depth of pump intake: ~~3.15~~ ~~7.15~~ 7.15

Static water level after pump put into well 4.17'

Initial purge Rate/ Water Level (100-400 ml/min): 28 mL/min, 4.20'

Adjusted purge Rates/time/WL(record changes)

Flow rate at time of sampling: 28 mL/min

FIELD WATER QUALITY MEASUREMENTS (record at 3-5 minute intervals)

Time	1357	1415	1420	1425	1430	1435	1440	1445	1450	1455
Temp. (C)	Filling	25.30	25.27	25.20	25.18	25.14	25.12	25.10	25.09	25.07
Conduct. (µmhos/cm)	YSI	0.393	0.393	0.392	0.392	0.390	0.387	0.384	0.381	0.377
DO (mg/l)		1.24	0.98	0.81	0.73	0.67	0.63	0.57	0.54	0.51
pH (Std. Units)		6.56	6.54	6.52	6.51	6.49	6.46	6.44	6.42	6.40
Eh (millivolts)		-64.5	-65.0	-64.3	-62.9	-58.7	-54.2	-49.9	-46.7	-43.2
Turb. (NTU)		7.38	6.51	11.9	22.5	54.5	75.7	87.4	86.1	82.0
Flow (ml/min)		28	28	28	28	28	28	28	28	28
Depth To Water (ft)		4.20	4.20	4.20	4.20	4.20	4.20	4.20	4.20	4.20
Time	1500	1505	1510	1515	1520	1525	1530	1535	1540	1545
Temp. (C)	25.06	25.05	25.04	25.03	25.02	25.02	25.02	25.02	25.01	25.01
Conduct. (µmhos/cm)	0.373	0.370	0.368	0.364	0.361	0.360	0.357	0.356	0.354	0.352
DO (mg/l)	0.50	0.48	0.47	0.45	0.45	0.45	0.44	0.44	0.44	0.44
pH (Std. Units)	6.38	6.36	6.36	6.33	6.32	6.31	6.30	6.30	6.28	6.28
Eh (millivolts)	-40.4	-37.4	-34.7	-30.9	-29.1	-27.2	-25.1	-24.5	-22.4	-21.3
Turb. (NTU)	78.2	66.6	59.7	50.5	46.8	40.9	37.1	32.6	30.7	27.6
Flow (ml/min)	28	28	28	28	28	28	28	28	28	28
Depth To Water (ft)	4.20	4.20	4.20	4.20	4.20	4.20	4.20	4.20	4.20	4.20

Pump Type	Purge	Sample
Peristaltic Pump		
Submersible Pump		
Bladder Pump	X	X
Other:		

Description of Sampling Equipment and Flow Rate:

YSI 600XL Sonde w/ 650 MDS Display, LaMotte 2020 Turbidimeter, Solinst WLM 101 (Slope), MP15 controller w/ CO_2 gas, Sample Pro 3/4" Micropurge bladder pump, dedicated tubing

Analytical Parameter	Filtered (Y/N)	Preservation	Volume	Time Collected	Sample #	Case #
VOCs	N	HCl	2x40 mL VOAs	1620	MW-28	
TOC	N	H_2SO_4	2x40 mL VOAs	1620	MW-28	
Nitrates	N	None	250 mL poly	1620	MW-28	
Sulfates	N	None	250 mL poly	1620	MW-28	

K:\geosci\fieldforms\lowflowrecord.ppt

Signed: James D. Grundy

Rev: 1 Feb 2007

TRC

Low-flow Groundwater Sampling Data Record

Project:	Project No.:	Date/Time:	Sheet 2 of 2
City of NB – NBHS	115058	9/9/10 1355	

TRC Personnel: J. Grundy

Well Identification: MW-28

WELL INTEGRITY

	YES	NO
Protect. Casing Secure	X	
Concrete Collar Intact	X	
PVC Stick-up Intact	X	
Well Cap Present		X
Security Lock Present		X

No plug

Protective Casing Stick-up (from ground) Flush ft.

Riser Stick-up (from ground) _____ ft.

WELL DIAMETER: 2 inch ☐ 4 inch ☐ 6 inch ☐ 1" ☒

WELL MATERIAL: PVC ☒ SS ☐ ☐

Well Depth 10.12 ft. ☒ top of riser ☐ top of casing ☐ measured ☒ historical

Water Depth 4.17 ft.

LNAPL/DNAPL Depth = N/A

Thickness =

LOW FLOW DATA

Depth of pump intake: 7.15'

Static water level after pump put into well 4.17'

Initial purge Rate/ Water Level (100-400 ml/min): 28 ml/min 4.20'

Adjusted purge Rates/time/WL(record changes)

Flow rate at time of sampling: 28 ml/min

PID SCREENING MEAS.

Background	
Well Mouth	

FIELD WATER QUALITY MEASUREMENTS (record at 3-5 minute intervals)

Time	1550	1555	1600	1605	1610	Sampling @		1620		
Temp. (C)	25.00	24.99	24.98	24.97	24.96					
Conduct. (µmhos/cm)	0.351	0.349	0.348	0.347	0.346	Purged over 2 hrs &				
DO (mg/l)	0.44	0.44	0.44	0.43	0.44	turbidity fairly stable.				
pH (Std. Units)	6.27	6.26	6.26	6.25	6.24					
Eh (millivolts)	-19.9	-18.7	-17.5	-16.3	-15.2					
Turb. (NTU)	24.8	23.2	21.3	22.1	21.5					
Flow (ml/min)	28	28	28	28	28					
Depth To Water (ft)	4.20	4.20	4.20	4.20	4.20					
Time										
Temp. (C)										
Conduct. (µmhos/cm)										
DO (mg/l)										
pH (Std. Units)										
Eh (millivolts)										
Turb. (NTU)										
Flow (ml/min)										
Depth To Water (ft)										

Pump Type	Purge	Sample
Peristaltic Pump	☐	☐
Submersible Pump	☐	☐
Bladder Pump	☒	☒
Other: _____	☐	☐

Description of Sampling Equipment and Flow Rate: See page 1

Analytical Parameter	Filtered (Y/N)	Preservation	Volume	Time Collected	Sample #	Case #
VOCs	N	HCl	2x40 mL VOA	1620	MW-28	
TOC	N	H_2SO_4	2x40 mL VOA	1620	MW-28	
Nitrates	N	None	250 mL poly	1620	MW-28	
Sulfates	N	None	250 mL poly	1620	MW-28	

K:\geosci\fieldforms\lowflowrecord.ppt

Signed: James A. Grundy

Rev: 1 Feb 2007

TRC

Low-flow Groundwater Sampling Data Record

Project:	Project No.:	Date/Time:	Sheet 1 of 1
City of NB-NBHS	115058	9/10/10 0945	

TRC Personnel: J. Grundy

Well Identification: MW-29

WELL INTEGRITY

	YES	NO
Protect. Casing Secure	X	
Concrete Collar Intact	X	
PVC Stick-up Intact	X	
Well Cap Present		X
Security Lock Present		X

No plug

PID SCREENING MEAS.

Background	0.0
Well Mouth	0.0

Protective Casing Stick-up (from ground): flush ft.

Riser Stick-up (from ground): _____ ft.

WELL DIAMETER: 2 inch / 4 inch / 6 inch / X 1"

WELL MATERIAL: X PVC / SS / ___

Well Depth: 9.53 ft. — X top of riser / top of casing / measured / X historical

Water Depth: 4.48 ft.

LNAPL/DNAPL Depth = N/A

Thickness =

LOW FLOW DATA

Depth of pump intake: 7'

Static water level after pump put into well: 4.52'

Initial purge Rate/ Water Level (100-400 ml/min): 35 ml/min, 4.55'

Adjusted purge Rates/time/WL(record changes)

Flow rate at time of sampling: 35 ml/min

FIELD WATER QUALITY MEASUREMENTS (record at 3-5 minute intervals)

Time	0955	1008	1013	1018	1023	1028	1033	1038	1043	1048
Temp. (C)	Filling	24.07	24.04	24.02	23.99	23.97	23.96	23.95	23.94	23.93
Conduct. (µmhos/cm)	YSI	0.835	0.838	0.843	0.849	0.850	0.851	0.852	0.852	0.851
DO (mg/l)		1.34	1.19	1.01	0.86	0.80	0.71	0.66	0.65	0.58
pH (Std. Units)		6.33	6.31	6.30	6.29	6.28	6.27	6.26	6.25	6.24
Eh (millivolts)		-50.8	-46.5	-41.2	-36.2	-32.7	-29.4	-26.7	-25.1	-23.3
Turb. (NTU)		13.7	14.1	15.9	13.9	13.9	12.0	9.92	8.61	7.61
Flow (ml/min)		35	35	35	35	35	35	35	35	35
Depth To Water (ft)		4.55	4.55	4.55	4.55	4.55	4.55	4.55	4.55	4.55

Time	1053	1058	1103	1108	1113	1118				
Temp. (C)	23.92	23.92	23.92	23.93	23.93	23.92				
Conduct. (µmhos/cm)	0.850	0.848	0.845	0.843	0.843	0.842				
DO (mg/l)	0.64	0.56	0.56	0.55	0.55	0.54				
pH (Std. Units)	6.24	6.23	6.23	6.22	6.21	6.21				
Eh (millivolts)	-22.4	-21.4	-20.4	-19.7	-18.8	-18.1				
Turb. (NTU)	6.19	5.46	5.27	4.51	4.31	4.32				
Flow (ml/min)	35	35	35	35	35	35				
Depth To Water (ft)	4.55	4.55	4.55	4.55	4.55	4.55				

Pump Type	Purge	Sample
Peristaltic Pump		
Submersible Pump		
Bladder Pump	X	X
Other:		

Description of Sampling Equipment and Flow Rate:

YSI 600XL Sonde w/ 650 MDS Display, LaMotte 2020 Turbidimeter, Sallinst w/ MI01 (slope), MP15 controller w/ CO_2 gas, Micropurge 3/4" bladder pump, dedicated tubing

Analytical Parameter	Filtered (Y/N)	Preservation	Volume	Time Collected	Sample #	Case #
VOCs	N	HCl	3x40mL VOA	1130	MW-29	
TOC	N	H_2SO_4	2x40mL VOA	1130	MW-29	
Nitrate	N	None	500mL poly	1130	MW-29	
Sulfate	N	None	500mL poly	1130	MW-29	

K:\geosci\fieldforms\lowflowrecord.ppt

Signed: James D. Grundy

Rev: 1 Feb 2007

TRC FIELD INSTRUMENT CALIBRATION LOG

Date: 9/8/10 Site Name: NBHS

Water Quality Instrument Type / ID: YSI 600XLM w/650 Display from Pine

Turbidity Instrument Type / ID: Lamotte 2020

Date of Last Temperature Probe Check: _____

Dissolved Oxygen (DO)

Time	Barometric Pressure (mm Hg)	Temperature (°Celsius)	100% Saturation Calibration (On Instrument)	Actual 100% Saturation Calibration (Refer to Attachment A)	Oxygen Solubility at Indicated Pressure (mg/L) (On Instrument)	Actual Oxygen Solubility at Indicated Pressure (mg/L) (Refer to Attachment B)	Zero DO Check (mg/L)	Comments	Initials
0820	755.6	24.47	99.4		8.27				HR

pH

Time	Solution Temperature (°Celsius)	pH 7	pH 4	pH 10	pH 7 Check	Comments	Initials
0830	24.17	7.00	4.00	10.00			HR

Specific Conductance

Time	Specific Conductance Reading (umhos/cm3)	Comments	Initials
0840	1.443		HR

Oxidation Reduction Potential (ORP)

Time	Solution Temperature (°Celsius)	ORP Reading (mV) (Refer to Attachment C)	Actual ORP Reading (mV) (On Instrument)	Comments	Initials
0843	24.30		239.9		HR

Turbidity

Time	Zero Standard	Standard #1 (1 NTUs)	Standard #2 (10 NTUs)	Comments	Initials
0850		1.01	10.00		HR

Calibration Fluid ID / Expiration Date:

Zero DO: 45251616

Specific Conductance: 7506 11/3/2010

pH 4: 2001172 12/2011

pH 7: 2003791 3/2012

pH 10: 2904590 10/10

ORP: 1477 3/2014

Zero Turbidity: NA

Turbidity Std. # 1: (10) 1005593 5/2011

Turbidity Std. # 2: (1) 1004593 4/2011

Signed: [illegible]

TRC FIELD INSTRUMENT CALIBRATION LOG

Date: 9/9/10 Site Name: NBHS

Water Quality Instrument Type / ID: YSI 600xLm HR YSI 600XL JG

Turbidity Instrument Type / ID: Lamotte 2020

Date of Last Temperature Probe Check: _____

Dissolved Oxygen (DO)

	Time	Barometric Pressure (mm Hg)	Temperature (°Celsius)	100% Saturation Calibration (On Instrument)	Actual 100% Saturation Calibration (Refer to Attachment A)	Oxygen Solubility at Indicated Pressure (mg/L) (On Instrument)	Actual Oxygen Solubility at Indicated Pressure (mg/L) (Refer to Attachment B)	Zero DO Check (mg/L)	Comments	Initials
HR	0810	751.4	18.21	98.8		9.31		~~0.49~~ 0.40		HR
JG	0820	751.0	20.03	98.9		8.99		0.44		JG

pH

	Time	Solution Temperature (°Celsius)	pH 7	pH 4	pH 10	pH 7 Check	Comments	Initials
JG	0833	22.20	7.00	4.00	10.00	7.01		JG
	0840	22.00	7.00	4.00	10.01	7.00		HR

Specific Conductance

	Time	Specific Conductance Reading (umhos/cm3)	Comments	Initials
HR	0835	1.413		HR
JG	0850	1.413		JG

Oxidation Reduction Potential (ORP)

Time	Solution Temperature (°Celsius)	ORP Reading (mV) (Refer to Attachment C)	Actual ORP Reading (mV) (On Instrument)	Comments	Initials
?					
~~0830~~ 0854	20.74		240.1		JG
0857	20.46		240.0		HR

Turbidity

Time	Zero Standard	Standard #1 (___ NTUs)	Standard #2 (___ NTUs)	Comments	Initials

Calibration Fluid ID / Expiration Date:

Zero DO: _____ Specific Conductance: _____

pH 4: _____ pH 7: _____ pH 10: _____

ORP: _____

see 9/8/10 Cal sheet

Zero Turbidity: _____ Turbidity Std. # 1: _____ Turbidity Std. # 2: _____

Signed _____

TRC FIELD INSTRUMENT CALIBRATION LOG

Date: 9/10/10 Site Name: NBHS

Water Quality Instrument Type / ID: YSI 600 XL w/ 650 Display

Turbidity Instrument Type / ID: Lamotte 2020

Date of Last Temperature Probe Check: _____

Dissolved Oxygen (DO)

Time	Barometric Pressure (mm Hg)	Temperature (°Celsius)	100% Saturation Calibration (On Instrument)	Actual 100% Saturation Calibration (Refer to Attachment A)	Oxygen Solubility at Indicated Pressure (mg/L) (On Instrument)	Actual Oxygen Solubility at Indicated Pressure (mg/L) (Refer to Attachment B)	Zero DO Check (mg/L)	Comments	Initials
HR 0730	752.9	18.20	99.1		9.34		0.40		HR
JG 0810	752.5	18.56	99.0		9.27		0.10		JG

pH

Time	Solution Temperature (°Celsius)	pH 7	pH 4	pH 10	pH 7 Check	Comments	Initials
0740	19.53	7.00	4.00	10.00	6.99		HR
0830	18.07	7.00	4.00	10.00	7.01		JG

Specific Conductance

Time	Specific Conductance Reading (umhos/cm3)	Comments	Initials
0750	1.414		HR
0820	1.414		

Oxidation Reduction Potential (ORP)

Time	Solution Temperature (°Celsius)	ORP Reading (mV) (Refer to Attachment C)	Actual ORP Reading (mV) (On Instrument)	Comments	Initials
0800 ~~749.04~~	19.64		240.0		HR
0825	18.29		240.1		JG

Turbidity

Time	Zero Standard	Standard #1 (1 NTUs)	Standard #2 (10 NTUs)	Comments	Initials
0840		1.01	10.00		HR
↓		0.99	9.98		JG

Calibration Fluid ID / Expiration Date:

Zero DO: _____ Specific Conductance: _____

pH 4: _____ see 9/8/10 Cal Sheet pH 7: _____ pH 10: _____

ORP: _____

Zero Turbidity: _____ Turbidity Std. # 1: _____ Turbidity Std. # 2: _____

Signed: H. Rin

TRC FIELD INSTRUMENT CALIBRATION LOG

Date: 9/13/10 Site Name: NBHS

Water Quality Instrument Type / ID: YSI 600XC w/ 650 Display

Turbidity Instrument Type / ID: Lamotte 2020

Date of Last Temperature Probe Check: _____

Dissolved Oxygen (DO)

Time	Barometric Pressure (mm Hg)	Temperature (°Celsius)	100% Saturation Calibration (On Instrument)	Actual 100% Saturation Calibration (Refer to Attachment A)	Oxygen Solubility at Indicated Pressure (mg/L) (On Instrument)	Actual Oxygen Solubility at Indicated Pressure (mg/L) (Refer to Attachment B)	Zero DO Check (mg/L)	Comments	Initials
0745	758.1	17.37	99.9		9.58		0.25		JG
0800	759.7	17.65	100.0		9.53				HR

pH

Time	Solution Temperature (°Celsius)	pH 7	pH 4	pH 10	pH 7 Check	Comments	Initials
0755	17.58	7.00	3.99	9.99	7.01		JG
0814	16.40	7.00	4.00	10.02	7.02		HR

Specific Conductance

Time	Specific Conductance Reading (umhos/cm3)	Comments	Initials
0808	1.413		JG
0825	1.413		HR

Oxidation Reduction Potential (ORP)

Time	Solution Temperature (°Celsius)	ORP Reading (mV) (Refer to Attachment C)	Actual ORP Reading (mV) (On Instrument)	Comments	Initials
0812	17.38		240.0		JG
0835	16.51		240.0		HR

Turbidity

Time	Zero Standard	Standard #1 (1 NTUs)	Standard #2 (10 NTUs)	Comments	Initials
0820	—	0.97	10.04		JG
0820	—	1.00	9.98		HR

Calibration Fluid ID / Expiration Date:

Zero DO: _____ Specific Conductance: _____

pH 4: _____ pH 7: _____ pH 10: _____

See 9/8/10 Cal Sheet

ORP: _____

Zero Turbidity: _____ Turbidity Std. # 1: _____ Turbidity Std. # 2: _____

Signed H. Rm

TRC

Low-flow Groundwater Sampling Data Record

Project:	Project No.:	Date/Time:	Sheet 1 of 2
City of New Bedford – NBHS	115058	10/22/10	

Well Identification: MW-7

TRC Personnel: Allison Drouin

WELL INTEGRITY

	YES	NO
Protect. Casing Secure	X	
Concrete Collar Intact	X	
PVC Stick-up Intact	X	
Well Cap Present	X	
Security Lock Present	X	

Protective Casing Stick-up (from ground) NA ft.

Riser Stick-up (from ground) NA ft.

WELL DIAMETER: X 2 inch; 4 inch; 6 inch

WELL MATERIAL: X PVC; SS; ___

Well Depth 15.88 ft. X top of riser; top of casing; ___ X measured; X historical 16.15

Water Depth 9.91 ft. LNAPL/DNAPL Depth = Sheen Thickness =

LOW FLOW DATA

Depth of pump intake: 14+

Static water level after pump put into well 9.89

Initial purge Rate/ Water Level (100-400 ml/min):

Adjusted purge Rates/time/WL(record changes) Drawdown initially. Turned down to 2 cycles per minute to stabalize.

Flow rate at time of sampling:

-possible IP Not working properly. No Strain on probe.

PID SCREENING MEAS.

Background	0.0
Well Mouth	0.0

umping so slowly that there is little actual low through zil. Had to zach stabilize many arameters.

FIELD WATER QUALITY MEASUREMENTS (record at 3-5 minute intervals)

Time	0810	0815	0820	0825	0830	0835	0840	0845	0850	0855
Temp. (C) 3%	12.29	12.53	12.65	12.71	12.73	12.95	12.97	13.19	13.35	13.38
Conduct. (µmhos/cm) 3%	0.1653	0.1657	0.1660	0.1660	0.1659	0.1662	0.1662	0.1667	0.1670	0.1670
DO (mg/l) 10%	2.84	2.66	2.76	2.13	2.07	2.82	2.63	2.08	1.97	1.92
pH (Std. Units) ±0.1	6.41	6.42	6.41	6.40	6.39	6.40	6.39	6.39	6.39	6.39
Eh (millivolts) ±10	156.6	182.2	198.7	198.3	190.8	172.4	174.6	164.8	153.2	151.2
Turb. (NTU) <5, ~~10%~~	BAT	10.19	9.84	7.69	7.96	7.11	10.84	9.28	7.89	7.23
Flow (ml/min)	44	44	33	33	22	22	22	22	22	22
Depth To Water (ft)	10.35	10.70	10.84	11.05	11.21	11.31	11.32	11.36	11.42	11.44
Time	0900	0905	0910	0913	0916	0919	0922	0925	0928	0931
Temp. (C)	13.42	13.59	13.62	13.66	13.78	13.98	14.12	14.26	14.16	14.19
Conduct. (µmhos/cm)	0.1671	0.1673	0.1674	0.1675	0.1676	0.1679	0.1682	0.1685	0.1683	0.1682
DO (mg/l)	1.87	1.74	1.72	1.90	1.89	1.76	1.71	1.60	1.57	1.55
pH (Std. Units)	6.39	6.39	6.38	6.38	6.38	6.38	6.38	6.38	6.38	6.37
Eh (millivolts)	147.5	140.2	136.9	125.3	129.7	130.5	126.2	123.7	126.3	121.7
Turb. (NTU)	7.94	8.30	8.04	7.75	6.78	5.99	7.63	6.48	7.47	6.65
Flow (ml/min)	22	22	22	22	22	22	~~22~~ 33	44	44	44
Depth To Water (ft)	11.45	11.48	11.44	11.5	11.52	11.52	11.55	11.59	11.65	11.76

Pump Type	Purge	Sample
Peristaltic Pump		
Submersible Pump		
Bladder Pump	X	X
Other:		

Description of Sampling Equipment and Flow Rate: YSI 556 MPS XL, Lamotte 2020, Solinst interface probe, MP-15 controller w/ CO_2 gas.

Analytical Parameter	Filtered (Y/N)	Preservation	Volume	Time Collected	Sample #	Case #
VOCs	N	HCl	2,40mL	1020	MW-7	

K:\geosci\fieldforms\lowflowrecord.ppt

Signed: Allison Drouin

Rev: 1 Feb 2007

TRC

Low-flow Groundwater Sampling Data Record

Project:	Project No.:	Date/Time:	Sheet 2 of 2
City of New Bedford – NBHS	115058	10/22/10	

Well Identification: MW-7

TRC Personnel: ASD

WELL INTEGRITY

	YES	NO
Protect. Casing Secure		
Concrete Collar Intact		
PVC Stick-up Intact		
Well Cap Present		
Security Lock Present		

SEE pg1

PID SCREENING MEAS.

Background	
Well Mouth	

Protective Casing Stick-up _____ ft. (from ground)

Riser Stick-up (from ground) _____ ft.

WELL DIAMETER ☐ 2 inch ☐ 4 inch ☐ 6 inch ☐

WELL MATERIAL ☐ PVC ☐ SS ☐ ___

Well Depth _____ ft. ☐ top of riser ☐ top of casing ☐ _____ ☐ measured ☐ historical

Water Depth _____ ft.

LNAPL/DNAPL Depth = _____

Thickness =

LOW FLOW DATA

Depth of pump intake: _____

Static water level after pump put into well

Initial purge Rate/ Water Level (100-400 ml/min):

Adjusted purge Rates/time/WL(record changes)

Flow rate at time of sampling:

FIELD WATER QUALITY MEASUREMENTS (record at 3-5 minute intervals)

Time	0934	0937	0940	0943	0946	0949	0952	0955	0958	1001
Temp. (C)	14.22	14.12	14.08	14.02	1405	14.07	14.22	14.28	14.35	14.40
Conduct. (µmhos/cm)	0.683	0.681	0.680	0.679	0.680	0.681	0.682	0.684	0.685	0.686
DO (mg/l)	1.49	1.50	1.49	1.48	1.55	1.52	1.44	1.38	1.33	1.34
pH (Std. Units)	6.38	6.37	6.37	6.37	6.37	6.37	6.37	6.37	6.37	6.37
Eh (millivolts)	119.7	119.6	118.6	117.0	116.5	115.9	116.2	115.2	112.1	112.2
Turb. (NTU)	6.24	6.46	6.72	6.09	6.39	6.22	5.95	6.35	5.04	6.27
Flow (ml/min)	44	44	44	44	55	55	55	55	55	55
Depth To Water (ft)	11.80	11.86	11.88	11.92	11.98	12.02	12.06	12.16	12.24	12.31
Time	1004	1007	1010	1013						
Temp. (C)	14.37	14.44	14.49	14.48	All stable					
Conduct. (µmhos/cm)	0.686	0.687	0.688	0.688	drawdown					
DO (mg/l)	1.32	1.32	1.30	1.31	slowing.	Will				
pH (Std. Units)	6.37	6.37	6.37	6.37						
Eh (millivolts)	111.7	109.5	108.2	108.9	sample					
Turb. (NTU)	5.07	5.41	5.08	4.09						
Flow (ml/min)	55	55	55	55						
Depth To Water (ft)	12.34	12.39	12.43	12.45						

Pump Type	Purge	Sample
Peristaltic Pump		
Submarsible Pump		
Bladder Pump		
Other: _____		

Description of Sampling Equipment and Flow Rate:

SEE pg1

Analytical Parameter	Filtered (Y/N)	Preservation	Volume	Time Collected	Sample #	Case #

K:\geosci\fieldforms\lowflowrecord.ppt

Rev: 1 Feb 2007

Signed: Allen Drain

TRC

Low-flow Groundwater Sampling Data Record

Project:	Project No.:	Date/Time:	Sheet 1 of 1
City of New Bedford – NBHS	115058	10/21/10	

Well Identification: MW-24

TRC Personnel: Allison Drain

WELL INTEGRITY

	YES	NO
Protect. Casing Secure	X	
Concrete Collar Intact	X	
PVC Stick-up Intact	X	
Well Cap Present	X	
Security Lock Present	X	

Protective Casing Stick-up (from ground): NA ft.

Riser Stick-up (from ground): NA ft.

WELL DIAMETER: [X] 2 inch [ ] 4 inch [ ] 6 inch

WELL MATERIAL: [X] PVC [ ] SS [ ] —

Well Depth 13.6 ft. [X] top of riser [ ] top of casing [ ] — [ ] measured [X] historical

Water Depth 8.71 ft. LNAPL/DNAPL Depth = Possible sheen @ water table. IP May be active up. Has been all day. No sheen on probe. Thickness = —

LOW FLOW DATA

Depth of pump intake: 11'

Static water level after pump put into well: 8.70

Initial purge Rate/ Water Level (100-400 ml/min): 44 ml/min

Adjusted purge Rates/time/WL(record changes)

Flow rate at time of sampling: 44 ml/min

PID SCREENING MEAS.

Background	0.7
Well Mouth	0.7

FIELD WATER QUALITY MEASUREMENTS (record at 3-5 minute intervals)

Time	1515	1520	1525	1530	1535	1540	1545	1550	~~1555~~	
Temp. (C) 3%	16.26	16.2	16.09	16.02	15.90	15.8	15.79	15.8		
3% Conduct. (µmhos/cm)	0.509	1.004	1.003	1.003	1.000	0.997	0.996	0.996		
DO (mg/l) 10%	1.65	1.53	1.52	1.43	1.31	1.26	1.25	1.29		
pH (Std. Units) ±0.1	6.48	6.48	6.48	6.48	6.48	6.48	6.48	6.48		
Eh (millivolts) ±10	-69.9	-68.3	-65.5	-63.4	-66.8	-68.2	-69.8	-68.9		
Turb. (NTU) <5, 10%	10.37	9.08	8.07	7.05	5.54	5.37	4.09	4.01		
Flow (ml/min)	44	44	44	44	44	44	44	44		
Depth To Water (ft)	8.84	8.84	8.85	8.85	8.85	8.85	8.84	8.85		
Time										
Temp. (C)										
Conduct. (µmhos/cm)										
DO (mg/l)										
pH (Std. Units)										
Eh (millivolts)										
Turb. (NTU)										
Flow (ml/min)										
Depth To Water (ft)										

Pump Type	Purge	Sample
Peristaltic Pump	[ ]	[ ]
Submersible Pump	[ ]	[ ]
Bladder Pump	[X]	[X]
Other:	[ ]	[ ]

Description of Sampling Equipment and Flow Rate: YSI ~~1550~~ 556 (60) XL, LaMotte 2020, Solinst interface probe, MP-15 controller w/ CO_2 gas

Analytical Parameter	Filtered (Y/N)	Preservation	Volume	Time Collected	Sample #	Case #
VOCs	N	HCl	2.40 mL	1530	MW-24	

K:\geosci\fieldforms\lowflowrecord.ppt

Signed: Allison Drain

Rev: 1 Feb 2007

TRC

Low-flow Groundwater Sampling Data Record

Project:	Project No.:	Date/Time:	Sheet 1 of 1
City of New Bedford – NBHS	115058	10/21/10	

Well Identification: MW-27

TRC Personnel: Kevin Jordan

WELL INTEGRITY

	YES	NO
Protect. Casing Secure	X	
Concrete Collar Intact	X	
PVC Stick-up Intact	X	
Well Cap Present		X
Security Lock Present	X	

Protective Casing Stick-up (from ground) NA ft.

Riser Stick-up (from ground) NA ft.

Well Depth 11.52 ft. [X] top of riser [ ] top of casing [ ] [ ] measured [X] historical

Water Depth 3.18 ft.

LNAPL/DNAPL Depth = —

Thickness =

WELL DIAMETER [ ] 2 inch [ ] 4 inch [ ] 6 inch [X] 1 in

WELL MATERIAL [X] PVC [ ] SS [ ] —

PID SCREENING MEAS.

Background	0.3
Well Mouth	7.1

LOW FLOW DATA

Depth of pump intake: 10'

Static water level after pump put into well

Initial purge Rate/ Water Level (100-400 ml/min): 84 mL/min ; 3.20

Adjusted purge Rates/time/WL(record changes)

Flow rate at time of sampling: 90

FIELD WATER QUALITY MEASUREMENTS (record at 3-5 minute intervals)

Time	1530	1535	1540	1545	1550	1555	1600			
Temp. (C) 3%	22.95	22.72	22.65	22.59	22.59	22.59	22.59			
3% Conduct. (µmhos/cm)	0.330	0.328	0.327	0.325	0.325	0.324	0.325			
DO (mg/l) 10%	0.73	0.45	0.33	0.33	0.29	0.31	0.31			
pH (Std. Units) ±0.1	6.19	6.18	6.18	6.17	6.17	6.17	6.17			
Eh (millivolts) ±10	-12.7	-15.2	-16.5	-18.3	-18.6	-18.9	-19.5			
Turb. (NTU) <5	13.0	12.2	7.96	5.49	3.99	4.42	3.76			
Flow (ml/min)	84	70	70	84	84	84	90			
Depth To Water (ft)	3.20	3.22	3.22	3.22	3.27	3.25	3.27			
Time										
Temp. (C)										
Conduct. (µmhos/cm)										
DO (mg/l)										
pH (Std. Units)										
Eh (millivolts)										
Turb. (NTU)										
Flow (ml/min)										
Depth To Water (ft)										

Pump Type	Purge	Sample
Peristaltic Pump	[ ]	[ ]
Submersible Pump	[ ]	[ ]
Bladder Pump	[X]	[X]
Other:	[ ]	[ ]

Description of Sampling Equipment and Flow Rate: YSI ~~#556~~ 556MPS XL, LaMotte 2020, Solinst interface probe, MP 15 controller w/ CO_2 gas

Analytical Parameter	Filtered (Y/N)	Preservation	Volume	Time Collected	Sample #	Case #
VOCs	N	HCL	2,40mL	1605	MW-27	

K:\geosci\fieldforms\lowflowrecord.ppt

Rev: 1 Feb 2007

Signed: Kevin Jordan

TRC

Low-flow Groundwater Sampling Data Record

Project:	Project No.:	Date/Time:	Sheet 1 of 1
City of New Bedford – NBHS / 115058		10/21/10	

Well Identification: MW-28

TRC Personnel: Kevin Jordan

WELL INTEGRITY

	YES	NO
Protect. Casing Secure	X	
Concrete Collar Intact	X	
PVC Stick-up Intact	X	
Well Cap Present		X
Security Lock Present	X	

PID SCREENING MEAS.

Background	0.7
Well Mouth	26.0

Protective Casing Stick-up (from ground) NA ft.

Riser Stick-up (from ground) NA ft.

WELL DIAMETER ☐ 2 inch ☐ 4 inch ☐ 6 inch ☒ 1 in

WELL MATERIAL ☒ PVC ☐ SS ☐ —

Well Depth 10.12 ft. ☒ top of riser ☐ top of casing ☐ measured ☒ historical

Water Depth 3.29 ft.

LNAPL/DNAPL Depth = ____ Thickness =

LOW FLOW DATA

Depth of pump intake: ____

Static water level after pump put into well 3.35

Initial purge Rate/ Water Level (100-400 ml/min): 56 ml/min ; 3.35'

Adjusted purge Rates/time/WL(record changes) started low, but adjusted due to no drawdown

Flow rate at time of sampling: 72 ml/min

FIELD WATER QUALITY MEASUREMENTS (record at 3-5 minute intervals)

Time	1215	1220	1225	1230	1235	1240	1245	1250	1255	1300
Temp. (C) 3%	24.72	24.61	24.58	24.48	24.41	24.28	24.21	24.15	24.13	24.13
3% Conduct. (µmhos/cm)	0.177	0.331	0.330	0.328	0.327	0.324	0.323	0.322	0.320	0.319
DO (mg/l) 10%	8.21	1.26	0.96	0.68	0.51	0.45	0.38	0.37	0.34	0.32
pH (Std. Units) ±0.1	6.14	6.17	6.17	6.18	6.18	6.18	6.18	6.17	6.17	6.17
Eh (millivolts) ±10	-24.3	-50.8	-55.5	-70.3	-72.8	-76.4	-77.3	-77.4	-76.0	-72.9
Turb. (NTU) <5	46.3	49.1	28.1	41.3	60.0	93.4	130.	121	60.7	47.8
Flow (ml/min)	56	56	56	60	60	60	60	60	60	60
Depth To Water (ft)	3.35	3.33	3.34	3.35	3.35	3.33	3.34	3.35	3.35	3.35

Time	1305	1310	1315	1320	1325	1330	1335	1340	1345	1350
Temp. (C)	24.11	24.08	24.06	24.06	24.06	24.06	24.07	24.07	24.07	24.07
Conduct. (µmhos/cm)	0.318	0.318	0.317	0.317	0.316	0.315	0.315	0.315	0.314	0.314
DO (mg/l)	0.33	0.33	0.40	0.38	0.31	0.29	0.34	0.33	0.31	0.29
pH (Std. Units)	6.17	6.17	6.17	6.17	6.16	6.16	6.16	6.16	6.16	6.16
Eh (millivolts)	-78.5	-79.5	-80.2	-83.2	-82.5	-81.4	-82.4	-84.0	-85.0	-85.3
Turb. (NTU)	42.6	36.1	29.2	23.2	20.3	12.0	11.8	9.77	6.96	5.32
Flow (ml/min)	72	72	72	72	72	72	72	72	72	72
Depth To Water (ft)	3.34	3.35	3.33	3.34	3.35	3.35	3.34	3.33	3.35	3.34

Pump Type	Purge	Sample
Peristaltic Pump	☐	☐
Submersible Pump	☐	☐
Bladder Pump	☒	☒
Other: ____	☐	☐

Description of Sampling Equipment and Flow Rate: ~~YSI 556~~ 556MPS XL, Lamotte 2020, Solinst interface probe, MP 15 controller w/ CO_2 gas

Analytical Parameter	Filtered (Y/N)	Preservation	Volume	Time Collected	Sample #	Case #
VOCs	N	HCl	2,40mL	13:55	MW-28	

K:\geosci\fieldforms\lowflowrecord.ppt

Rev: 1 Feb 2007

Signed: Kevin Jordan

TRC

Low-flow Groundwater Sampling Data Record

Project:	Project No.:	Date/Time:	Sheet 1 of 1
City of New Bedford – NBHS	115058	10/21/10	

Well Identification: MW-30

TRC Personnel: Kevin Jordan

WELL INTEGRITY

	YES	NO
Protect. Casing Secure	X	
Concrete Collar Intact	X	
PVC Stick-up Intact	X	
Well Cap Present	X	
Security Lock Present	X	

Protective Casing Stick-up (from ground): NA ft.

Riser Stick-up (from ground): NA ft.

Well Depth: 15' ft. [X] top of riser [ ] top of casing [ ] [ ] measured [X] historical

Water Depth: 9.10 ft.

LNAPL/DNAPL Depth = ____

Thickness = ____

WELL DIAMETER [X] 2 inch [ ] 4 inch [ ] 6 inch [ ] ____

WELL MATERIAL [X] PVC [ ] SS [ ] ____

PID SCREENING MEAS.

Background	0.0
Well Mouth	0.2

LOW FLOW DATA

Depth of pump intake: 12'

Static water level after pump put into well: 9.62'

Initial purge Rate/ Water Level (100-400 ml/min): 36 / 9.62'

Adjusted purge Rates/time/WL(record changes)

Flow rate at time of sampling: 36 mL/min

FIELD WATER QUALITY MEASUREMENTS (record at 3-5 minute intervals)

Time	0850	0855	0900	0905	0910	0915	0920	0925	0930	0935
Temp. (C) 3%	13.24	13.05	12.82	13.16	13.28	13.57	13.50	13.31	13.32	15.17
3% Conduct. (µmhos/cm)	0.677	0.675	0.672	0.675	0.677	0.683	0.681	0.679	0.679	0.678
DO (mg/l) 10%	1.40	1.34	1.27	1.31	0.88	0.84	0.72	0.64	0.55	0.54
pH (Std. Units) ±0.1	6.65	6.64	6.63	6.63	6.62	6.62	6.61	6.41	6.61	6.60
Eh (millivolts) ±10	98.1	89.3	82.8	73.1	67.5	56.7	30.5	13.1	1.1	-5.7
Turb. (NTU) <5	1.99	1.78	1.42	1.56	1.49	1.68	1.57	1.53	2.62	2.82
Flow (ml/min)	36	36	48	48	48	36	36	36	36	36
Depth To Water (ft)	9.62	9.70	9.71	9.82	9.79	9.80	9.86	9.79	9.79	9.79
Time	0940	0945								
Temp. (C)	13.07	13.16								
Conduct. (µmhos/cm)	0.678	0.678								
DO (mg/l)	0.52	0.51								
pH (Std. Units)	6.60	6.60								
Eh (millivolts)	-12.6	-14.9								
Turb. (NTU)	2.74	2.18								
Flow (ml/min)	36	36								
Depth To Water (ft)	9.80	9.79								

Pump Type	Purge	Sample
Peristaltic Pump	[ ]	[ ]
Submersible Pump	[ ]	[ ]
Bladder Pump	[X]	[X]
Other: ____	[ ]	[ ]

Description of Sampling Equipment and Flow Rate: YSI ~~1050~~ 556 MPS XL, Lamotte 2020, Solinst interface probe, MP 15 controller w/ CO_2 gas

Analytical Parameter	Filtered (Y/N)	Preservation	Volume	Time Collected	Sample #	Case #
VOCs	N	HCL	2, 40mL	0950	MW-30	

K:\geosci\fieldforms\lowflowrecord.ppt

Rev: 1 Feb 2007

Signed: Kevin Jordan

TRC

Low-flow Groundwater Sampling Data Record

Project: City of New Bedford – NBHS / 115058 **Project No.:**

Date/Time: 10 21 10

Sheet 1 **of** 2

Well Identification: MW-31

TRC Personnel: Kevin Jordan

WELL INTEGRITY

	YES	NO
Protect. Casing Secure	X	
Concrete Collar Intact	X	
PVC Stick-up Intact	X	
Well Cap Present	~~X~~ PSD	X
Security Lock Present	X	

PID SCREENING MEAS.

Background	0.0
Well Mouth	0.3

Protective Casing Stick-up (from ground) NA ft.

Riser Stick-up (from ground) NA ft.

WELL DIAMETER ☐ 2 inch ☐ 4 inch ☐ 6 inch ☒ 1in

WELL MATERIAL ☒ PVC ☐ SS ☐ ___

Well Depth 91 ft. ☒ top of riser ☐ top of casing ☐ ___ ☐ measured ☒ historical

Water Depth 3.30 ft. LNAPL/DNAPL Depth = ___ Thickness =

LOW FLOW DATA

Depth of pump intake: 6'

Static water level after pump put into well 3.25'

Initial purge Rate/ Water Level (100-400 ml/min): 80

Adjusted purge Rates/time/WL(record changes)

Flow rate at time of sampling: 92

FIELD WATER QUALITY MEASUREMENTS (record at 3-5 minute intervals)

Time	0850	0855	0900	0905	0910	0915	0920	0925	0930	0935
Temp. (C) 3%	23.06	23.06	23.04	23.04	23.04	23.04	23.04	23.03	23.03	23.03
3% Conduct. (µmhos/cm)	0.472	0.472	0.470	0.470	0.471	0.470	0.469	0.468	0.468	0.469
DO (mg/l) 10%	1.08	0.99	0.98	0.97	1.07	1.06	1.05	1.02	1.02	1.03
pH (Std. Units) ±0.1	5.29	5.27	5.26	5.26	5.26	5.26	5.25	5.25	5.25	5.24
Eh (millivolts) ±10	8.9	-11.4	-24.0	-27.7	-32.7	-34.1	-36.5	-41.5	-43.4	-45.5
Turb. (NTU) <5	OR	1169	875	734	682	632	453	270	220	234
Flow (ml/min)	80	120	80	80	60	120	80	80	120	80
Depth To Water (ft)	3.12	3.38	3.35	3.26	3.31	3.12	3.12	3.33	3.27	3.10

OR = out of range

Time	0940	0945	0950	0955	1000	1005	1010	1015	1020	1025
Temp. (C)	23.03	23.03	23.03	23.03	23.03	23.04	23.04	23.04	23.04	23.04
Conduct. (µmhos/cm)	0.469	0.469	0.471	0.470	0.472	0.473	0.474	0.474	0.475	0.474
DO (mg/l)	1.02	1.03	1.00	1.00	0.98	0.95	0.94	0.93	0.90	0.90
pH (Std. Units)	5.25	5.24	5.24	5.24	5.24	5.25	5.25	5.25	5.25	5.26
Eh (millivolts)	-47.9	-48.8	-51.1	-53.2	-57.2	-58.7	-61.2	-62.5	-64.6	-66.4
Turb. (NTU)	227	238	309	232	190	188	208	164	228	252
Flow (ml/min)	80	96	80	120	60	120	80	88	128	60
Depth To Water (ft)	3.15	3.32	3.30	3.37	3.34	3.17	3.26	3.31	3.17	2.98

Pump Type	Purge	Sample
Peristaltic Pump	☐	☐
Submersible Pump	☐	☐
Bladder Pump	☒	☒
Other: ___	☐	☐

Description of Sampling Equipment and Flow Rate: YSI ~~650~~ 556 (MPS) XL, LaMotte 2020, Solinst interface water level meter, MP-15 controller w/ CO_2 gas

Analytical Parameter	Filtered (Y/N)	Preservation	Volume	Time Collected	Sample #	Case #
VOCs	N	HCl	2, 40mL	1100	MW-31	

K:\geosci\fieldforms\lowflowrecord.ppt

Signed: Kevin Jordan

Rev: 1 Feb 2007

TRC

Low-flow Groundwater Sampling Data Record

Project:	Project No.:	Date/Time:	Sheet 2 of 2
City of New Bedford – NBHS	115058	10/21/10	

Well Identification: MW-31

TRC Personnel: KDJ

WELL INTEGRITY

	YES	NO
Protect. Casing Secure		
Concrete Collar Intact		
PVC Stick-up Intact		
Well Cap Present		
Security Lock Present		

Protective Casing Stick-up _____ ft. (from ground)

Riser Stick-up (from ground) _____ ft.

WELL DIAMETER ☐ 2 inch ☐ 4 inch ☐ 6 inch ☐ _____

WELL MATERIAL ☐ PVC ☐ SS ☐ ___

Well Depth _____ ft. ☐ top of riser ☐ top of casing ☐ _____ ☐ measured ☐ historical

Water Depth _____ ft.

LNAPL/DNAPL Depth = _____

Thickness =

LOW FLOW DATA

Depth of pump intake: _____

Static water level after pump put into well

Initial purge Rate/ Water Level (100-400 ml/min):

Adjusted purge Rates/time/WL(record changes)

Flow rate at time of sampling:

PID SCREENING MEAS.

Background	
Well Mouth	

FIELD WATER QUALITY MEASUREMENTS (record at 3-5 minute intervals)

Time	1030	1035	1040	1045	1050	1055				
Temp. (C)	23.04	23.04	23.04	23.04	23.04	23.04				
Conduct. (µmhos/cm)	0.476	0.477	0.477	0.477	0.477	0.478				
DO (mg/l)	0.89	0.90	0.95	0.97	0.93	0.97				
pH (Std. Units)	5.25	5.26	5.25	5.26	5.26	5.26				
Eh (millivolts)	-69.0	-69.8	-72.5	-73.0	-74.1	-74.6				
Turb. (NTU)	178	178	150	129	137	135				
Flow (ml/min)	96	80	96	96	96	92				
Depth To Water (ft)	2.97	3.22	3.21	3.23	3.18	3.20				
Time										
Temp. (C)										
Conduct. (µmhos/cm)										
DO (mg/l)										
pH (Std. Units)										
Eh (millivolts)										
Turb. (NTU)										
Flow (ml/min)										
Depth To Water (ft)										

Pump Type	Purge	Sample
Peristaltic Pump		
Submersible Pump		
Bladder Pump		
Other: _____		

Description of Sampling Equipment and Flow Rate:

Analytical Parameter	Filtered (Y/N)	Preservation	Volume	Time Collected	Sample #	Case #

pg. 1

pg. see 1

K:\geosci\fieldforms\lowflowrecord.ppt

Signed: Kevin Jordan

Rev: 1 Feb 2007

TRC

Low-flow Groundwater Sampling Data Record

Project: City of New Bedford – NBHS / 115058 **Project No.:**

Date/Time: 10/21/10

Sheet 1 **of** 2

Well Identification: MW-32

TRC Personnel: Allison Drain

WELL INTEGRITY

	YES	NO
Protect. Casing Secure	X	
Concrete Collar Intact	X	
PVC Stick-up Intact	X	
Well Cap Present		X
Security Lock Present	X	

Protective Casing Stick-up (from ground) NA ft.

Riser Stick-up (from ground) NA ft.

Well Depth 91 ft. [X] top of riser [ ] top of casing [ ] [ ] measured [X] historical

Water Depth 3.31 ft.

LNAPL/DNAPL Depth = —

Thickness =

WELL DIAMETER [ ] 2 inch [ ] 4 inch [ ] 6 inch [X] 1in

WELL MATERIAL [X] PVC [ ] SS [ ] —

LOW FLOW DATA

Depth of pump intake: 60'

Static water level after pump put into well 3.30

Initial purge Rate/ Water Level (100-400 ml/min): 55

Adjusted purge Rates/time/WL(record changes) could not get pump above 66 mL/min

Flow rate at time of sampling: 66 mL/min

PID SCREENING MEAS.

Background	0.0
Well Mouth	0.1

FIELD WATER QUALITY MEASUREMENTS (record at 3-5 minute intervals)

Time	0830	0845	0850	0855	0900	0905	0910	0915	0920	0925
Temp. (C) 3%	23.1	23.11	23.06	23.05	23.07	23.02	23.02	23.00	22.99	22.96
3% Conduct. (µmhos/cm)	0.446	0.445	0.443	0.443	0.442	0.441	0.441	0.439	0.439	0.438
DO (mg/l) 10%	—	1.61	1.74	1.77	1.85	3.22	2.31	2.10	2.07	2.05
pH (Std. Units) ±0.1	5.28	5.26	5.25	5.25	5.24	5.24	5.24	5.23	5.23	5.23
Eh (millivolts) ±10	-20.1	-16.7	-29.2	-23.6	-37.0	-29.2	-40.4	-39.5	-26.6	-31.9
Turb. (NTU) <5	OR	273	799	268	239	260	245	275	249	226
Flow (ml/min)	40	55	55	55	66	66	66	66	66	60
Depth To Water (ft)	3.38	3.42	3.43	3.41	3.41	3.41	3.42	3.41	3.44	3.42
Time	0930	0935	0940	0945	0950	0955	1000	1005	1010	1015
Temp. (C)	22.98	23.00	23.01	22.94	22.91	22.88	22.85	22.83	22.84	22.86
Conduct. (µmhos/cm)	0.438	0.438	0.439	0.438	0.439	0.440	0.442	0.443	0.443	0.448
DO (mg/l)	2.05	2.04	2.84	2.52	2.42	2.38	2.39	2.31	2.70	2.36
pH (Std. Units)	5.23	5.24	5.24	5.24	5.24	5.24	5.24	5.24	5.24	5.25
Eh (millivolts)	-28.2	-24.1	-32.7	-44.3	-61.8	-66.6	-69.0	-70.7	-76.2	-8.7
Turb. (NTU)	156	117	124	159	216	280	804	761	841	950
Flow (ml/min)	60	60	66	66	66	66	66	66	66	66
Depth To Water (ft)	3.44	3.42	3.42	3.42	3.42	3.42	3.42	3.42	3.42	3.42

F - out of range

D off at start - recalib. 100% sat

Pump Type	Purge	Sample
Peristaltic Pump	[ ]	[ ]
Submersible Pump	[ ]	[ ]
Bladder Pump	[X]	[X]
Other:	[ ]	[ ]

Description of Sampling Equipment and Flow Rate: YSI ~~650~~ 556 MPS XL, Lamotte 2020, 50 inst interface probe, MP15 controller w/ CO_2 gas

Analytical Parameter	Filtered (Y/N)	Preservation	Volume	Time Collected	Sample #	Case #
VOCs	N	HCl	2.40 ml	1045	MW-32	

K:\geosci\fieldforms\lowflowrecord.ppt

Signed: Allison Drain

Rev: 1 Feb 2007

TRC

Low-flow Groundwater Sampling Data Record

Project:	Project No.:	Date/Time:	Sheet 2 of 2
City of New Bedford – NBHS	115058	10/21/10	

Well Identification: MW-3Z

TRC Personnel: ASD

WELL INTEGRITY

	YES	NO
Protect. Casing Secure		
Concrete Collar Intact		
PVC Stick-up Intact		
Well Cap Present		
Security Lock Present		

PID SCREENING MEAS.

Background	
Well Mouth	

Protective Casing Stick-up _____ ft. (from ground)

Riser Stick-up (from ground) _____ ft.

WELL DIAMETER ☐ 2 inch ☐ 4 inch ☐ 6 inch

WELL MATERIAL ☐ PVC ☐ SS ☐ ___

Well Depth _____ ft. ☐ top of riser ☐ top of casing ☐ _____ ☐ measured ☐ historical

Water Depth _____ ft.

LNAPL/DNAPL Depth = _____ Thickness =

LOW FLOW DATA

Depth of pump intake: _____

Static water level after pump put into well

Initial purge Rate/ Water Level (100-400 ml/min):

Adjusted purge Rates/time/WL(record changes)

Flow rate at time of sampling:

FIELD WATER QUALITY MEASUREMENTS (record at 3-5 minute intervals)

Time	1020	1025	1030	1035	1040	1045				
Temp. (C)	22.86	22.88	22.88	22.9	22.9	22.89				
Conduct. (µmhos/cm)	0.448	0.448	0.451	0.450	0.451	0.452				
DO (mg/l)	2.30	2.27	2.26	2.27	2.26	2.26				
pH (Std. Units)	5.25	5.25	5.25	5.25	5.26	5.26				
Eh (millivolts)	-66.0	-72.2	-73.0	-64.6	-61.4	-69.4				
Turb. (NTU)	862	256	238	269	254	248				
Flow (ml/min)	66	66	66	66	66	66				
Depth To Water (ft)	3.42	3.42	3.43	3.42	3.42	3.42				
Time										
Temp. (C)										
Conduct. (µmhos/cm)										
DO (mg/l)										
pH (Std. Units)										
Eh (millivolts)										
Turb. (NTU)										
Flow (ml/min)										
Depth To Water (ft)										

Pump Type	Purge	Sample
Peristaltic Pump		
Submersible Pump		
Bladder Pump		
Other: _____		

Description of Sampling Equipment and Flow Rate:

Analytical Parameter	Filtered (Y/N)	Preservation	Volume	Time Collected	Sample #	Case #

Signed: [signature]

TRC

Low-flow Groundwater Sampling Data Record

Project:	Project No.:	Date/Time:	Sheet 1 of 2
City of New Bedford – NBHS	115058	10 21 10	

Well Identification: MW-33

TRC Personnel: Allison Drain

WELL INTEGRITY

	YES	NO
Protect. Casing Secure	X	
Concrete Collar Intact	X	
PVC Stick-up Intact	X	
Well Cap Present		X
Security Lock Present	X	

Protective Casing Stick-up (from ground): NA ft.

Riser Stick-up (from ground): NA ft.

Well Depth: 9' ft. — [X] top of riser [ ] top of casing [ ] [ ] measured [X] historical

Water Depth: 3.28 ft.

LNAPL/DNAPL Depth = —

Thickness = —

WELL DIAMETER [ ] 2 inch [ ] 4 inch [ ] 6 inch [X] 1 inch

WELL MATERIAL [X] PVC [ ] SS [ ] —

LOW FLOW DATA

Depth of pump intake: 6'

Static water level after pump put into well: 3.21

Initial purge Rate/ Water Level (100-400 ml/min): 66

Adjusted purge Rates/time/WL(record changes)

Flow rate at time of sampling: 42 ml/min

PID SCREENING MEAS.

Background	0.7
Well Mouth	0.7

FIELD WATER QUALITY MEASUREMENTS (record at 3-5 minute intervals)

Time	1130	1135	1140	1145	1150	1155	1200	1205	1210	1215
Temp. (C) 3%	22.23	22.17	22.16	22.11	22.10	22.09			22.04	
3% Conduct. (µmhos/cm)	0.442	0.454	0.454	0.452	0.452	0.451	No draw down. to pump while having Lunch.	allowing	0.445	
DO (mg/l) 10%	1.88	2.21	2.24	2.23	2.23	2.52			2.26	
pH (Std. Units) ±0.1	5.31	5.29	5.29	5.29	5.28	5.27			5.34	
Eh (millivolts) ±10	27.5	15.4	12.1	-9.8	-19.5	-26.6			-48.2	
Turb. (NTU) <5	1,671	1984	2,215	2,052	1,870	1,928			2,238	
Flow (ml/min)	1010	55	55	55	55	44			44	
Depth To Water (ft)	3.54	3.91	3.85	3.98	4.06	3.98	3.46		3.76	

Time	1225	1235	1240	1305	1310	1315	1320	1325	1330	1335
Temp. (C)	21.82	22.	22.08	22.09	22.08	22.08	22.08	22.08	22.10	22.11
Conduct. (µmhos/cm)	0.442		0.424	0.424	0.426	0.424	0.424	0.423	0.419	0.415
DO (mg/l)	3.43	Flow through cell not full	6.51	1.87	1.46	1.34	1.37	1.45	1.24	1.5
pH (Std. Units)	5.40		5.62	5.60	5.60	5.60	5.63	5.64	5.68	5.75
Eh (millivolts)	-71.1		18.2	7.0	4.4	3.2	-4.8	-9.2	-21.7	-33.0
Turb. (NTU)	292	284	257	241	260	183	141	140	108	86.5
Flow (ml/min)	44			48	48	48	48	48	48	40
Depth To Water (ft)	3.71	3.69		3.69	3.69	3.69	3.73	3.74	3.75	3.75

rinsed flow through 1225

Pump Type	Purge	Sample
Peristaltic Pump		
Submersible Pump		
Bladder Pump	X	X
Other:		

Description of Sampling Equipment and Flow Rate: YSI 556 MPS XL, Lamotte 2020, Solinst interface water level meter, MP15 Controller w/ CO_2 gas

Analytical Parameter	Filtered (Y/N)	Preservation	Volume	Time Collected	Sample #	Case #
VOCs	N	HCl	2.40 mL	1410	MW-33	

Signed: Allison Drain

TRC

Low-flow Groundwater Sampling Data Record

Project: City of New Bedford – NBHS / 115058 **Project No.:**

Date/Time: 10 | 21 | 10

Sheet 2 **of** 2

Well Identification: MW-33

TRC Personnel: Allison Drouin

SEE AGE 1

WELL INTEGRITY

	YES	NO
Protect. Casing Secure		
Concrete Collar Intact		
PVC Stick-up Intact		
Well Cap Present		
Security Lock Present		

PID SCREENING MEAS.

Background	
Well Mouth	

Protective Casing Stick-up _____ ft. (from ground)

Riser Stick-up (from ground) _____ ft.

WELL DIAMETER ☐ 2 inch ☐ 4 inch ☐ 6 inch ☐ ____

WELL MATERIAL ☐ PVC ☐ SS ☐ ____

Well Depth _____ ft. ☐ top of riser ☐ top of casing ☐ _____ ☐ measured ☐ historical

Water Depth _____ ft. LNAPL/DNAPL Depth = _____ Thickness =

LOW FLOW DATA

Depth of pump intake: _____

Static water level after pump put into well

Initial purge Rate/ Water Level (100-400 ml/min):

Adjusted purge Rates/time/WL(record changes)

Flow rate at time of sampling:

FIELD WATER QUALITY MEASUREMENTS (record at 3-5 minute intervals)

Time	1340	1345	1350	1355	1400	1405	1410	1415		
Temp. (C)	22.13	22.13	22.13	22.14	22.15	22.15				
Conduct. (µmhos/cm)	0.412	0.408	0.405	0.403	0.402	0.402				
DO (mg/l)	1.40	1.21	1.24	1.10	0.14	0.13				
pH (Std. Units)	5.77	5.80	5.86	5.89	5.93	5.95				
Eh (millivolts)	-34.5	-39.3	-46.2	-49.9	-54.1	-57.1				
Turb. (NTU)	86.4	84.8	71.5	51.4	52.10	56.2				
Flow (ml/min)	310	42	42	42	42	42				
Depth To Water (ft)	3.75	3.74	3.75	3.75	3.75	3.75				
Time										
Temp. (C)										
Conduct. (µmhos/cm)										
DO (mg/l)										
pH (Std. Units)										
Eh (millivolts)										
Turb. (NTU)										
Flow (ml/min)										
Depth To Water (ft)										

sampled pumped over 2 hrs and turbidity now going back up.

Pump Type	Purge	Sample
Peristaltic Pump	☐	☐
Submersible Pump	☐	☐
Bladder Pump	☐	☐
Other: _____	☐	☐

Description of Sampling Equipment and Flow Rate:

SEE PG 1

Analytical Parameter	Filtered (Y/N)	Preservation	Volume	Time Collected	Sample #	Case #

K:\geosci\fieldforms\lowflowrecord.ppt

Signed: Allison Drouin

Rev: 1 Feb 2007

Field Instrument Calibration Log

TRC

Date: 10/21/2010 Site Name: City of New Bedford - NBHS

Water Quality Instrument Type / ID: YSI 556 - #1-10612/6003664M #2 10F20/1003336-4M

Turbidity Instrument Type / ID: LaMotte 2020e #1 11550 #2

Date of Last Temperature Probe Check:

Dissolved Oxygen (DO)

	Time	Barometric Pressure (mm Hg)	Temperature (° Celsius)	100% Saturation Calibration (On Instrument)	Actual 100% Saturation Calibration (Refer to Attachment A)	Oxygen Solubility at Indicated Pressure (mg/L) (On Instrument)	Actual Oxygen Solubility at Indicated Pressure (mg/L) (Refer to Attachment B)	Zero DO Check (mg/L)	Comments	Initials
#1	0645	760	75°F	100%	100%	10.38	10.5	0.23	Recal. to	AW
#2	0700		75°F	100%	100%	9.72	9.63	0.03	100% Sat	KJ

pH

	Time	Solution Temperature (° Celsius)	pH 7	pH 4	pH 10	pH 7 Check	Comments	Initials
#1	0650	13.37	7.00	4.00	9.99	7.02		AW
#2	0705	15.2	7.00	4.00	9.99	7.07		KJ

Specific Conductance

	Time	Specific Conductance Reading (umhos/cm3)	Comments	Initials
#1	0655	1.413	fro 1.398 → 1.413	AW
#2	0713	1.413	fro 1.322 → 1.413	KJ

KJ's solutions warmed significantly in the mechanical room.

Oxidation Reduction Potential (ORP)

	Time	Solution Temperature (° Celsius)	ORP Reading (mV) (Refer to Attachment C)	Actual ORP Reading (mV) (On Instrument)	Comments	Initials
#1	0659	13.21	246.6	246.6		AW
#2	0718	16.65	241.4	241.5		KJ

Turbidity

	Time	Zero Standard	Standard #1 (1 NTUs)	Standard #1 (10 NTUs)	Comments	Initials
#1	0725	0	1	9.98		AW
	0730	0	1	9.95		KJ

Calibration Fluid ID / Expiration Date:

Zero DO: 4 5251616 Specific Conductance: 8924 - 7/9/2011

pH 4: 2001122 / 12-2011 ph 7: 2003791 / 3-2012 pH 10: 1002035 / 7-2011

ORP: 23103

Zero Turbidity: Turbidity Std. # 1: Turbidity Std. #2:

Signed [signature]

L2008-213

TRC

Low-flow Groundwater Sampling Data Record

Project: NBHS | Project No.: 115058 | Date/Time: 0945 11/18/10 | Sheet 1 of 1

TRC Personnel: H. Rizza

Well Identification: MW-27D

WELL INTEGRITY

	YES	NO
Protect. Casing Secure	✓	
Concrete Collar Intact	✓	
PVC Stick-up Intact	✓	
Well Cap Present	✓	
Security Lock Present		✓

Protective Casing Stick-up (from ground): Flush ft.

Riser Stick-up (from ground): NA ft.

WELL DIAMETER: ✓ 2 inch; 4 inch; 6 inch

WELL MATERIAL: ✓ PVC; SS; ___

Well Depth: 17.00 ft. ✓ top of riser; top of casing; ___ measured; ✓ historical

Water Depth: 2.16 ft.

LNAPL/DNAPL Depth = ND Thickness = ND

LOW FLOW DATA

Depth of pump intake: 14.5 (5' screen)

Static water level after pump put into well: 2.16

Initial purge Rate/ Water Level (100-400 ml/min): 150 ml/min

Adjusted purge Rates/time/WL(record changes): NA

Flow rate at time of sampling: 150 ml/min

PID SCREENING MEAS.

Background	0.0
Well Mouth	1.4

FIELD WATER QUALITY MEASUREMENTS (record at 3-5 minute intervals)

Time	0955	1000	1005	1010	1015	1020	1025	1030	1035	
Temp. (C)	start	21.03	20.94	20.92	20.90	20.87	20.87	20.87	20.86	
Conduct. (µmhos/cm)	pump	0.306	0.307	0.307	0.307	0.306	0.305	0.305	0.305	
DO (mg/l)		1.03	0.69	0.56	0.47	0.41	0.40	0.35	0.33	
pH (Std. Units)		5.93	5.90	5.90	5.90	5.91	5.91	5.91	5.91	
Eh (millivolts)		-46.3	-98.8	-115.8	-145.2	-166.5	-171.0	-175.5	171.6	
Turb. (NTU)		3.11	2.41	1.57	1.37	1.23	1.21	1.18	1.15	
Flow (ml/min)		150	150	150	150	150	150	150	150	
Depth To Water (ft)		2.16	2.16	2.16	2.16	2.16	2.16	2.16	2.16	
Time										
Temp. (C)										
Conduct. (µmhos/cm)										
DO (mg/l)										
pH (Std. Units)										
Eh (millivolts)										
Turb. (NTU)										
Flow (ml/min)										
Depth To Water (ft)										

Pump Type	Purge	Sample
Peristaltic Pump		
Submersible Pump		
Bladder Pump	✓	✓
Other:		

Description of Sampling Equipment and Flow Rate: Sampled w/ bladder pump, YSI MP15 w/ CO_2 Gas, IP, Lanotte 2020 + dedicated tubing.

Analytical Parameter	Filtered (Y/N)	Preservation	Volume	Time Collected	Sample #	Case #
VOCs + TOIS	N	HCl	3 x 40 ml	1040	MW-27D	NA

K:\geosci\fieldforms\lowflowrecord.ppt

Signed: H Rizza

Rev: 1 Feb 2007

Field Instrument Calibration Log

TRC

Date: 11/18/10 Site Name: NBHS

Water Quality Instrument Type / ID: YSI 600 XL w/ 650 Display Pine # 2243

Turbidity Instrument Type / ID: Lamotte 2020 Pine

Date of Last Temperature Probe Check: 11/17/2011

Dissolved Oxygen (DO)

Time	Barometric Pressure (mm Hg)	Temperature (° Celsius)	100% Saturation Calibration (On Instrument)	Actual 100% Saturation Calibration (Refer to Attachment A)	Oxygen Solubility at Indicated Pressure (mg/L) (On Instrument)	Actual Oxygen Solubility at Indicated Pressure (mg/L) (Refer to Attachment B)	Zero DO Check (mg/L)	Comments	Initials
0855	760.0	16.05	100.0		9.84		0.34		HR

pH

Time	Solution Temperature (° Celsius)	pH 7	pH 4	pH 10	pH 7 Check	Comments	Initials
0900	15.74	7.00	4.06	10.00	7.01		HR

Specific Conductance

Time	Specific Conductance Reading (umhos/cm3)	Comments	Initials
0905	1.413		HR

Oxidation Reduction Potential (ORP)

Time	Solution Temperature (° Celsius)	ORP Reading (mV) (Refer to Attachment C)	Actual ORP Reading (mV) (On Instrument)	Comments	Initials
0909	16.13	242.7	242.9		HR

Turbidity

Time	Zero Standard	Standard #1 (____ NTUs)	Standard #1 (____ NTUs)	Comments	Initials
					HR

Calibration Fluid ID / Expiration Date:

Zero DO: 44328

Specific Conductance: 8124 7/8/2011

pH 4: 200/172 12/2011

ph 7: 2910105 9/2011

pH 10: 8421 10/8/2011

ORP: 1477 3/2014

Zero Turbidity: NA

Turbidity Std. # 1:

Turbidity Std. #2:

Signed [signature]

L2008-213