IMMEDIATE RESPONSE ACTION STATUS REPORT & REMEDIAL MONITORING REPORT

New Bedford High School Substantial Release Migration / Critical Exposure Pathway
230 Hathaway Boulevard
New Bedford, Massachusetts
Release Tracking Number 4-22409

Prepared for:

City of New Bedford
133 William Street
New Bedford, Massachusetts 02740

Prepared by:

TRC Environmental Corporation
Wannalancit Mills
650 Suffolk Street
Lowell, Massachusetts 01854
(978) 970-5600

November 2015

TABLE OF CONTENTS

1.0 INTRODUCTION 1

2.0 BACKGROUND 2

2.1 Release Discovery 2
2.2 Release Reporting 3
2.3 Imminent Hazard Evaluation 3
2.4 Subsequent Discovery of DNAPL and PCBs 3
2.5 IRA Plan and IRA Plan Modifications 4
2.5.1 Verbally approved IRA activities (January 2010) 4
2.5.2 IRA Plan (March 2010) 4
2.5.3 IRA Plan Modification (January 2011) 5
2.5.4 IRA Plan Modification (February 2012) 5
2.6 Activities Performed Prior to this Reporting Period 5

3.0 IMMEDIATE RESPONSE ACTION STATUS 7

3.1 The Status of Assessment and Remedial Actions 7
3.2 Hydraulic Control and Subslab Venting Systems 7
3.2.1 Routine System Inspections 8
3.2.2 Non-Routine System Maintenance and Scheduled or Unscheduled Downtime 9
3.2.3 Evaluation of Indoor Air Conditions 10
3.2.4 Influent & Effluent Monitoring and Results 11
3.2.5 Quarterly Discharge Monitoring 11
3.2.6 Emissions Monitoring Results 12
3.2.7 Hydraulic Control and Venting System Operation and Maintenance Summary 13
3.3 Groundwater Monitoring 13
3.3.1 Groundwater Sampling Event – July 27, 2015 14
3.4 Management of Remedial Wastewater and Remediation Wastes 14
3.4.1 Management of Remedial Wastewater 14
3.4.2 Management of Other Remediation Wastes 15
3.4.3 Management of Investigation Wastes 15
3.4.4 Cumulative Record of Remediation Waste Management 15
3.5 Strategy for IRA Completion 16
3.6 LSP Opinion 17

4.0 REFERENCES 18

TABLES

Table 1: Summary of Analytical Results for Aqueous Seep Samples (2009 through 2013)
Table 2: Summary of Analytical Results for Groundwater Samples (2008 through 2015)
Table 3: Summary of Analytical Results for Indoor Air Samples (2010 through 2015)
Table 4: Summary of Analytical Results for Soil Gas Samples (2010 through 2015)
Table 5: Summary of Hydraulic Control System Results for Water Samples (2012 through 2015)
Table 6: Summary of Analytical Results for Quarterly Discharge Monitoring Samples (2012 through 2015)
Table 7: Summary of Subslab Vapor Mitigation System Emission Results (2012 through 2015)

FIGURES

Figure 1: Site Aerial Photograph
Figure 2: Site Plan with Sampling Locations
Figure 3: Mechanical Room Soil PCB Results Summary Map
Figure 4: Process and Instrumentation Diagram
Figure 5: Indoor Air, Soil Gas and Wipe Sample Locations in Vicinity of Mechanical Room

APPENDICES

Appendix A: Copy of Discharge Permit # S-123
Appendix B: Hydraulic Control System Operation, Maintenance & Monitoring Logs
Appendix C: Laboratory Data Reports
Appendix D: Groundwater Sampling Forms

1.0 INTRODUCTION

TRC Environmental Corporation (TRC) is submitting this Immediate Response Action Status Report (IRA Status Report) to the Massachusetts Department of Environmental Protection (MassDEP) on behalf of the City of New Bedford (City) through the City's Department of Environmental Stewardship and per the Massachusetts Contingency Plan (MCP; 310 CMR 40.0000). The IRA addresses a former Condition of Substantial Release Migration (SRM) at the New Bedford High School (NBHS) campus located at 230 Hathaway Boulevard in New Bedford, Massachusetts (the "Site") as defined under 310 CMR 40.0006 of the MCP. The location of the Site is shown on Figure 1.

The City reported the condition to MassDEP per 310 CMR 40.0313(5) and 310 CMR 40.0412(2) via telephone with TRC on January 29, 2010 at approximately 11:05 AM. MassDEP verbally approved IRA assessment and mitigation activities at the Site, and assigned Release Tracking Number (RTN) 4-22409. The IRA Plan was submitted by the City to MassDEP on March 22, 2010 (TRC, 2010a). On April 17, 2014, the City submitted a Tier Classification to MassDEP for RTN 4-22409. The Tier Classification, which included a summary of compliance history and a Conceptual Phase II Scope of Work, was submitted consistent with the proposed amendments to the MCP (310 CMR 40.0510).[1] RTN 4-22409 was given a Tier I Classification consistent with the criteria provided in 310 CMR 40.0520(2) of the revised MCP.

This IRA Status Report covers the period from April 13 through October 13, 2015. The report is organized as follows: Section 2 (Background) briefly summarizes information on TRC's involvement with the Site, the circumstances of the release, and the response actions conducted at the Site under MassDEP approval; Section 3 (IRA Status Report) provides the contents of an IRA Status Report as set forth under the MCP, specifically 310 CMR 40.0425; and Section 4 (References) lists information sources relied upon in the preparation of this IRA Status Report.

[1] Final amendments were published on April 25, 2014 with an effective date of June 20, 2014. The City received concurrence from MassDEP to submit the Tier Classification consistent with the proposed amendments in advance of the final published and effective dates.

2.0 BACKGROUND

The SRM condition was discovered during investigation of water pooled on the lower floors of the Mechanical Room (B-114) of the NBHS building. Several samples of the water, which appeared to have seeped through cracks or seams in the floor, were collected and submitted for laboratory analysis. Analytical results for these samples suggested the potential for chlorinated volatile organic compounds (VOCs) to be present in indoor air in the building, which resulted in the reporting condition and the initiation of IRA assessment activities.

2.1 Release Discovery

A detailed description of the release discovery in the Mechanical Room of the NBHS building is presented in the IRA Plan submitted to MassDEP on March 22, 2010 (TRC, 2010a) and subsequent IRA Status Reports and IRA Plan Modifications associated with RTN 4-22409 as referenced in Section 4. A brief summary is provided herein.

On December 2, 2009, aqueous samples were collected from four locations (BRM-S-1 through BRM-S-3 and FIP-S-1) where water was present on the lower floor of the Mechanical Room of the NBHS building (see Figure 2). The water appeared to have seeped through cracks and seams in the lower concrete floor. The detected concentration of vinyl chloride (VC) in seep sample BRM-S-3 (2.1 micrograms per liter; µg/L) was greater than the MCP Method 1 GW-2 groundwater standard of 2 µg/L (see Table 1).

To evaluate the presence of VC, additional samples of the water were collected for VOC analysis on January 7, 2010. As indicated in Table 1, chlorinated VOCs were not detected in two out of the four samples (BRM-S-1 and BRM-S-2). Chlorinated VOCs were detected in sample BRM-S-3 (chlorobenzene, 1,3-dichlorobenzene [1,3-DCB], 1,4-dichlorobenzene [1,4-DCB], cis-1,2-dichloroethylene [cis-1,2-DCE], trans-1,2-dichloroethylene [trans-1,2-DCE], trichloroethylene [TCE] and VC) and sample FIP-S-1 (cis-1,2-DCE and trans-1,2-DCE).

On January 6 and 7, 2010, groundwater samples were collected from monitoring wells MW-4 through MW-7 at the Site (see Figure 2). Chlorinated VOCs were detected in groundwater samples from two of the monitoring wells (MW-5 located in the Boiler Room adjacent to the Mechanical Room, and MW-7 located in front of NBHS near the flagpole). The concentrations of tetrachloroethylene (PCE) and VC in the sample from MW-7 exceeded their respective MCP Method 1 GW-2 groundwater standards (see Table 2).

In parallel with the aforementioned investigation activities, the City evaluated building structural features that might influence fate and transport in the groundwater beneath the NBHS building (as well as the investigative approach), the results of which have been provided in previous status reports.

2.2 Release Reporting

On January 28, 2010 at approximately 3:30 PM, TRC advised the City's Department of Environmental Stewardship that the seep and impacted water and the underdrain system represented two potential SRM conditions as defined in 310 CMR 40.0006:

- Releases to the groundwater that have migrated or are expected to migrate more than 200 feet per year; or
- Releases to the groundwater or to the vadose zone that have resulted or are within one year likely to result in the discharge of vapors into school buildings or occupied residential dwellings.

Either of these conditions constituted a 72-hour regulatory reporting obligation to the MassDEP in accordance with 310 CMR 40.0313(5).

The SRM conditions described above were reported by the City to the MassDEP via telephone on January 29, 2010 at approximately 11:05 AM. MassDEP verbally approved IRA activities at the Site and assigned RTN 4-22409.

2.3 Imminent Hazard Evaluation

Under 310 CMR 40.0426, "an Imminent Hazard (IH) Evaluation shall be performed as part of an Immediate Response Action at sites where a release or threat of release could pose an Imminent Hazard to human health, safety, public welfare, or the environment." At this site, an IH screening evaluation was performed and submitted with the IRA Plan (TRC, 2010a) and updated versions were included in the IRA Status Reports submitted to MassDEP on May 24, 2010 (TRC, 2010b) and November 29, 2010 (TRC, 2010c). An additional update was provided in the IRA Status Report dated May 31, 2011 (TRC, 2011b).

Based on the sampling conducted in January, April and August 2010 and April 2011, there is no IH Condition or chronic risk/hazard exceeding MCP risk limits associated with current indoor air exposures.

2.4 Subsequent Discovery of DNAPL and PCBs

Initially, this release (RTN 4-22409) was characterized by the presence of chlorinated VOCs in groundwater and potentially indoor air. Subsequent investigations between 2010 and July 2014 identified the presence of localized dense non-aqueous phase liquid (DNAPL) beneath the floor of the Mechanical Room, identified the presence of polychlorinated biphenyls (PCBs) within the DNAPL, and delineated the extent of PCBs in nearby soils (see Figure 3 for PCB results). Recent actions performed under this IRA have been designed to assess and/or mitigate the DNAPL and PCB contamination in addition to the chlorinated VOCs.

On August 30, 2010, TRC observed small globules of DNAPL during development of newly-installed well MW-27. A sample of the DNAPL was collected for laboratory VOC analysis.

The analytical results indicated that TCE was present in the DNAPL.

On August 2, 2011 the City was notified that groundwater shipped for disposal at United Industrial Services of Meriden, Connecticut following a short-term IRA groundwater removal event contained PCBs at a concentration of 160 parts per million (ppm). The City notified MassDEP and the United States Environmental Protection Agency (EPA) Region 1 PCB Coordinator of this information via telephone with TRC on August 2, 2011. PCBs were later found to represent approximately 25-percent of the DNAPL and to be present in soils beneath the Mechanical Room floor.

2.5 IRA Plan and IRA Plan Modifications

The approved IRA Plan is comprised of the initial verbally approved IRA Plan as amended by the written IRA Plan (TRC, 2010a), and the two IRA Plan Modifications (TRC, 2011a and TRC, 2012a).

2.5.1 Verbally approved IRA activities (January 2010)

The initial IRA Plan was authorized by MassDEP at the time the release was reported on January 29, 2010 and consisted of the following:

- Monitoring of indoor air locations, including the Mechanical Room, for VOCs with expedited analysis. Recognizing that indoor air in the Mechanical Room may reflect materials stored in this area, MassDEP suggested taking an inventory of chemicals stored at the NBHS building, relocation of indoor chemical sources, and ventilation of the Mechanical Room prior to re-sampling in this area;
- Re-sampling of aqueous seeps in the Mechanical Room floor; and
- Sealing of the floor seeps.

2.5.2 IRA Plan (March 2010)

The written IRA Plan submitted in March 2010 (TRC, 2010a) identified the following activities:

- Characterization of indoor air;
- Additional characterization of subslab soil vapors;
- Additional characterization of groundwater from new and existing monitoring wells located in and around the NBHS building;
- Additional evaluation of the storm sewer system on the NBHS campus;
- Additional evaluation of the sanitary sewer system on the NBHS campus;
- Additional evaluation of the air handling systems, foundation cracks, floor drains, sink drains and other annular spaces;

- Evaluation of the Critical Exposure Pathway (CEP) and implementation of CEP mitigation measures, where warranted;
- Removal of interior sources to evaluate potential contributions to indoor air readings if appropriate; and
- Sealing of drains and cracks.

2.5.3 IRA Plan Modification (January 2011)

The January 2011 IRA Plan Modification (TRC, 2011a) added the removal and off-site disposal of chlorinated VOC-impacted groundwater in the vicinity of monitoring well MW-27 to the previously approved IRA activities. Groundwater removal was performed using a vacuum truck during short-term pumping events (Total Fluid Extraction [TFE]) at monitoring well MW-27R, and post-extraction groundwater samples were subsequently collected in accordance with EPA Region 1 low-flow sampling techniques.

On February 23, 2011, MassDEP issued an approval of the IRA Plan Modification. A copy of the approval letter is included in the IRA Status Report submitted to MassDEP on May 31, 2011 (TRC, 2011b).

2.5.4 IRA Plan Modification (February 2012)

The second IRA Plan Modification (TRC, 2012a) described additional activities to further investigate and control migration of chlorinated VOC impacts in the vicinity of MW-27R. The modifications included installation, operation and maintenance of a hydraulic control system in the Mechanical Room and additional investigation of subsurface impacts in the area using a Membrane Interface Probe System (MIPS). MassDEP provided verbal approval of the IRA Plan Modification on March 15, 2012.

2.6 Activities Performed Prior to this Reporting Period

The results of IRA investigation, impact removal and mitigation activities conducted prior to this IRA Status Report are detailed in the IRA-related plans, modifications and status reports referenced in Section 4. Analytical results obtained during previous IRA activities are summarized in the tables included with this report. The prior work has included but is not limited to the following:

- Evaluation of the CEP and implementation of CEP mitigation measures, where warranted;
- Investigation of soil vapors and indoor air;
- Sealing of drains and cracks using Contite® penetrating mortar[2];
- Evaluation of aqueous seeps[3];

[2] The application of the Contite® penetrating mortar was successful in eliminating seepage throughout a large portion of the Mechanical Room.

- Evaluation of a potential IH condition associated with the seeps;
- Assessment of soils in the vicinity of the Mechanical Room;
- Investigation of subsurface impacts using a MIPS;
- Evaluation of groundwater conditions via new and existing monitoring wells located inside and around the NBHS building;
- Analysis of the DNAPL encountered below the Mechanical Room;
- Assessment of potential leaks into or out of the storm sewer and sanitary sewer systems at the Site;
- Evaluation of the air handling systems, foundation cracks, floor drains, sink drains and other annular spaces in the building;
- TFE groundwater removal events at recovery well MW-27R;
- Installation and operation of a groundwater pump and treat system at recovery wells MW-27R and MW-42R to control migration of and remove contaminants from groundwater; and
- Installation and operation of a subslab venting system to prevent vapor migration to the Mechanical Room.

[3] Although the seepage has significantly attenuated, seepage is observed periodically within the chiller deck and former incinerator pit. The analytical results from recent seep samples do not indicate the presence of compounds of concern; however, the chiller deck, former incinerator pit and the locations of previous seeps continue to be observed.

3.0 IMMEDIATE RESPONSE ACTION STATUS

This IRA Status Report provides the information set forth under 310 CMR 40.0425(3)(a) through (e) of the MCP for the reporting period of April 13 through October 13, 2015.

3.1 The Status of Assessment and Remedial Actions

During the reporting period, the City has continued implementation of activities under the second IRA Plan Modification (TRC, 2012a) and conducted supplemental investigatory sampling. Work performed during the reporting period has included the following:

- Operation and maintenance of the hydraulic control and subslab venting systems;
- Evaluation of indoor air conditions;
- Evaluation of seep mitigation measures; and
- Groundwater sampling and analysis.

New information associated with these activities is provided below in Sections 3.2 through 3.6.

3.2 Hydraulic Control and Subslab Venting Systems

The hydraulic control system utilizes pumping to control migration of impacted groundwater. The extracted groundwater is treated, then discharged to the municipal sewer system. The current process and instrumentation diagram for the hydraulic control system is provided as Figure 4.

Groundwater is discharged to the municipal sewer system under a discharge permit obtained from the City's Department of Public Infrastructure (DPI). The original permit was effective on April 1, 2012. The permit was recently renewed through April 1, 2018. Copies of the original permit and permit addendum were provided in the IRA Status Reports dated November 28, 2012 (TRC, 2012c) and May 28, 2013 (TRC, 2013), respectively. A copy of the current permit is provided in Appendix A.

Groundwater is pumped from recovery wells MW-27R and MW-42R using individual above-grade centrifugal pumps to two 500-gallon capacity accumulation/settling tanks. These tanks provide separation/removal of particulates and potential non-aqueous phase liquids and allow break-up of oil emulsions. Recovered groundwater is then pumped through two bag filters equipped with oil absorbing 5-micron filter bags to remove oil and provide filtration of particulate (the second bag filter was increased from 1 micron to 5 microns in May 2013 in an effort to reduce the frequency of bag filter replacement and still maintain a suitable level of system performance). Bag Filter No. 2 discharges to three carbon filtration vessels, each with 300-pounds (lbs.) of granular activated carbon (see Figure 4).

The hydraulic control system equipment is installed in the former incinerator pit inside the Mechanical Room, adjacent to the recovery wells. Recovery wells MW-27R and MW-42R each have maximum yields in the range of approximately 1 to 2 gallons per minute (gpm). The

hydraulic control treatment system is designed to accommodate as much as 10 gpm. The design flow rate for the system is based on hydraulic calculations by TRC (see Appendix A of the IRA Plan Modification [TRC, 2012a]).

Sub-slab vapors in the vicinity of the recovery wells are collected to mitigate potential migration of impacted vapors to the dewatered underdrain system. A vacuum blower is used to extract vapor from MW-27R through the exposed (i.e., above the water table) portion of the well screen. The extracted vapors then pass through two 200-lb. vapor-phase carbon vessels installed immediately downstream of the blower to remove organic contaminants from the exhaust stream. The treated vapors are then discharged to an exhaust stack that previously served the former incinerator. The vapor collection and treatment configuration is depicted on the same process and instrumentation diagram as the hydraulic control system (see Figure 4).

3.2.1 *Routine System Inspections*

Routine hydraulic control system inspections were performed weekly during the first month of operation, and then decreased to a biweekly basis. Following MassDEP approval in October 2012, the inspection frequency was reduced to monthly. During this reporting period, the monthly system inspections were performed on the following dates:

- Week 163 – May 14, 2015
- Week 167 – June 5, 2015 (system shut down)
- Week 171 – Not Applicable (system restarted on July 27, 2015)
- Week 175 – August 14, 2015
- Week 179 – September 15, 2015
- Week 183 – October 13, 2015

Inspections by a certified Grade 2 treatment plant operator have been conducted every three months (in June and September 2015 during this reporting period). Inspections not performed by the certified plant operator have been performed by other qualified TRC personnel in coordination with the certified treatment plant operator.

A routine inspection of the hydraulic control system includes a set of maintenance procedures, system measurements, and collection of aqueous and vapor samples. System operation and maintenance logs from this reporting period are included as Appendix B. Refer to Figure 4 for the locations of sample ports (SP), pressure gauges (PG), valves (V), and vapor sample ports (VSP). Operation and maintenance procedures generally include the following:

- Check holding tanks and measure turbidity and liquid level;
- Check air filter for possible clogging;
- Check fault controls to verify proper operation;
- Check bag filters and replace them if necessary;
- Record total flow since system startup (FM-1);

- Record temperature (Ambient and T-1);
- Record valve positions (PG-1 through PG-5, V-2/V-4, V-5) and adjust if necessary;
- Record pressure at various gauges throughout the system (PG-1 through PG-8);
- Measure turbidity of water at designated sample locations (Influent Tank-1, SP-2, SP-4, SP-5, SP-6 and SP-7);
- Measure vapor concentrations with a photoionization detector (PID) at designated sample locations (Influent Tank-1, SP-1 [MW-27R], SP-2, SP-4 or SP-5, SP-6, SP-7, and SP-8 [MW-42R]);
- Measure vacuum at designated locations in the vapor system (VG-1, VG-2 and PG-9); and
- Gauge depth to water in selected wells (MW-27D, MW-31, MW-32 and MW-40).

Influent and effluent water samples are collected in conjunction with monthly system inspections, and pre-carbon vessel and intra-carbon vessel aqueous samples have been collected in conjunction with selected system inspections. Vapor inlet and emission samples continue to be collected on a monthly basis.

3.2.2 *Non-Routine System Maintenance and Scheduled or Unscheduled Downtime*

An auto-dialer is utilized to provide remote notification to the system operator of non-routine conditions that might require unscheduled system maintenance and/or might result in system downtime. Non-routine maintenance and repair activities did not account for any downtime during this reporting period.

The following summarizes downtime associated with scheduled maintenance or other events:

- June 5 to July 27, 2015 – The system was shut down for approximately 1,254 hours (52.25 days). Prior to resumption of system operation on July 27, indoor air (IA), soil vapor, and groundwater were sampled to evaluate the effects of the extended downtime.

- September 15, 2015 – The system was shut down for two hours for routine maintenance that included back-flushing the carbon, cleaning of the float controls and replacement of the bag filters. The float control switch in MW-42R was removed and cleaned; however, this did not resolve the problem, so the float control electrical contacts were bypassed to allow continuous operation of MW-42R and the float switch was scheduled for replacement.

The system was in operation for approximately 131 of the possible 183 days of operation between the April 13, 2015 maintenance event and the maintenance event conducted on October 13, 2015, representing approximately 71.6% of the reporting period. The system downtime during the reporting period was primarily associated with the planned system shutdown utilized to assess conditions in the absence of the system. Unscheduled shutdown periods accounted for less than 1% of the reporting period.

3.2.3 Evaluation of Indoor Air and Subslab Soil Gas Conditions

During the reporting period, TRC collected several IA samples in accordance with the Closure Sampling procedures described in the MassDEP Public Review Draft Vapor Intrusion Guidance WSC-14-435 (MassDEP, 2014). The Vapor Intrusion Guidance recommends IA sample rounds during a minimum of three system shutdown periods over a period of two years, with at least one shutdown/IA sampling event during the heating season and one event during a period of high groundwater levels. For each of these rounds, the system should be shut down for at least seven days prior to IA sampling.

The first system shutdown/IA sampling event for the NBHS subslab depressurization system was conducted by TRC in September 2014; refer to the November 2014 IRA Status report (TRC, 2014b) for additional details. The second system shutdown/IA sampling event was conducted during the winter school vacation period in December 2014 and January 2015; refer to the April 2015 IRA Status Report (TRC, 2015) for additional details.

The pumping and subslab depressurization systems at NBHS were shut down from June 5 to July 27, 2015. Three IA sampling events were conducted following the shutdown as summarized below. The IA samples were each collected over a 24-hour period and the samples were submitted to Alpha Analytical of Westborough, Massachusetts (Alpha) for analysis of VOCs by the TO-15 Method.

- One evacuated stainless steel summa canister was deployed on June 21, 2015 (16 days after system shutdown) in the mechanical room (IA-16).

- One evacuated stainless steel summa canister was deployed on July 9, 2015 (34 days after system shutdown) in the mechanical room (IA-16).

- Three evacuated stainless steel summa canisters were deployed on July 24, 2015 (49 days after system shutdown) in three locations within the Mechanical Room and the adjacent Kitchen Storage Area (TRC-IA-4, TRC-IA-16, and TRC-IA-17 as shown on Figure 5).

In addition, before system operation was resumed, an evacuated stainless steel summa canister was used to collect a soil gas sample from sample point PVP-6 (see Figure 5). The soil gas sample was collected over a 38-minute period and submitted to Alpha for analysis of VOCs by the TO-15 Method. The pumping and venting systems were restarted on July 27, 2015 following the completion of indoor air/soil gas sampling and subsequent groundwater sampling (discussed in Section 3.3).

The IA analytical results are provided in Table 3 and the soil gas analytical results are provided in Table 4. The associated laboratory reports are provided in Appendix C. The IA results summarized in Table 3 indicate that January 2015 post-shutdown IA concentrations do not exceed any MassDEP Indoor Air Threshold Values (IATVs), and concentrations of compounds of concern with regard to this IRA (i.e., chlorinated ethenes) were not detected.

The soil gas sample results summarized in Table 4 indicate that results for sample PVP-6 exceed recommended soil gas screening values for trans-1,2-DCE and TCE, consistent with historical results from this location.

The next closure sampling round is tentatively scheduled to coincide with the 2015 winter vacation period observed at NBHS.

3.2.4 Influent & Effluent Monitoring and Results

The monthly hydraulic control system influent and effluent monitoring samples are submitted to Alpha for analysis of VOCs (SW-846 Method 8260B) and PCBs (SW-846 Method 8082). Analytical results for samples collected during the reporting period are discussed below and summarized in Table 5. The laboratory reports are included in Appendix C.

During the reporting period, system influent and effluent samples exhibited detectable concentrations of chlorinated VOCs. Influent samples contained concentrations of TCE, VC, cis-1,2-DCE, trans-1,2-DCE, and 1,4-DCB. Effluent samples contained concentrations of cis-1,2-DCE (ranging from 19 to 30 µg/L) and trans-1,2-DCE (ranging from 16 to 28 µg/L). Because the publicly owned treatment works (POTW) does not limit discharges of these compounds, their detection in the effluent did not warrant a change out of the carbon filters.

Consistent with past monitoring events, PCBs were detected in each of the influent samples but were not detected in any of the effluent samples collected during this reporting period. The PCBs detected in the influent samples were generally identified as Aroclor 1254 and concentrations ranged from 5.89 to 14.3 ug/L.

3.2.5 Quarterly Discharge Monitoring

Treated groundwater is discharged to the municipal sanitary sewer system via a floor drain located in the former incinerator pit in accordance with the Industrial Discharge Permit (#S-123) obtained by TRC from the City's DPI. The permit is valid through April 1, 2018.

The Industrial Discharge Permit contains reporting and self-monitoring conditions that include the collection of discharge samples on a quarterly basis[4]. Quarterly discharge monitoring sampling events were conducted by TRC on behalf of the City on June 5, 2015 and September 15, 2015 per the permit requirements and the sampling, preservation, handling and analytical methods specified in 40 CFR § 136.

Aqueous discharge samples were collected during each quarterly event to be representative of daily hydraulic control system operations. Individual discrete samples are collected for pH (EPA Method 150.1) and Oil & Grease (EPA Method 1664A) analysis. Time-proportioned Biological Oxygen Demand (BOD; Method SM 5210B), Total Suspended Solids (TSS; Method SM

[4] The permit conditions were revised on July 2, 2012 (see Appendix B of the IRA Status Report prepared by TRC and dated November 28, 2012).

2540D), and PCB (EPA Method 608) samples are collected and composited in the field. Individually preserved sample aliquots were collected for VOC analysis during each event and submitted to Alpha for time-proportioned compositing per EPA Method 5030. Analytical results are summarized in Table 6 and the laboratory reports are included in Appendix C.

In addition, as required on an annual basis, a set of influent and effluent grab samples were collected by the City of New Bedford POTW on July 30, 2015 by Mr. Wayne Perry of the DPI. Samples were collected from the tank (influent) and from SP-7 (effluent) for analysis of VOCs and PCBs. TRC submitted a split set of the same samples to Alpha for laboratory analysis of VOCs and PCBs. Analytical results for the samples collected by TRC are included in Table 5 and the laboratory report is provided in Appendix C.

Based on the results of the June and September 2015 quarterly self-monitoring events, as well as the samples collected in July 2015, and consistent with the IRA-related monitoring activities since system startup, the discharge permit pretreatment standards are being met. No additional operation and maintenance and/or additional pretreatment efforts have been required to date to meet the requirements of the permit.

3.2.6 Emissions Monitoring Results

Venting system vapor samples are collected on a monthly basis. During the reporting period, inlet and outlet samples collected from the venting system in May, June, August, September and October 2015 were submitted to Alpha for analysis of VOCs (Method TO-15) and PCBs (Method TO-10A/8082). No samples were collected in July because the system only operated for five days in July following shut down at the end of the June 2015 sampling event. Analytical results are summarized in Table 7 and the laboratory reports are included in Appendix C.

Analytical results of vapor inlet sampling events during this reporting period have consistently indicated detectable concentrations of VOCs (VC, acetone, 1,2, 1,3 and 1,4-dichlorobenzene, trans-1,2-DCE, cis-1,2-DCE, chloroform, TCE, and toluene) and PCB Aroclors (see Table 7).

Several VOCs (including VC, trans-1,2-DCE, cis-1,2-DCE, benzene, chloroform, chlorobenzene, ethylbenzene, naphthalene, styrene, TCE, toluene and xylenes) were detected in the vapor discharge samples collected during the reporting period (see Table 7). PCB Aroclors were not detected in the vapor discharge samples collected during the reporting period.

In response to detections of VC and other compounds, air dispersion modeling was conducted for the emissions as detailed in the IRA Status Report dated May 29, 2012 (TRC, 2012b). Different models were employed to evaluate potential exposures to the NBHS air intake vent, exterior playground and parking lot area. The air dispersion modeling results indicated that the concentrations of VC and other compounds at these potential points of exposure for receptors are significantly below the associated MassDEP Ambient Air Limits. The air dispersion model has been updated periodically to include additional parameters and/or to revise the emission concentrations.[5]

[5] See Appendix F of the IRA Status Report dated November 28, 2012.

3.2.7 Hydraulic Control and Venting System Operation and Maintenance Summary

In addition to effluent and vapor sample results, as summarized above, system inspection logs and quarterly system operator reports (see Appendix B) provided the following information as of the September 2015 inspection:

- The flow meter recorded 133,058 gallons treated and discharged between April 13 and October 13, 2015. While the system was operating during this period, the average flow rate was 0.71 gpm. The average flow rate since system startup is approximately 0.90 gpm.
- The flow velocity of the venting system was measured on April 17, 2012 to be 5,600 to 5,650 feet per minute, which equates to approximately 110 cubic feet per minute (cfm). That measured flow rate is presumed to be representative of the current flow rate.
- System operating temperature (i.e., the ambient temperature in the vicinity of the hydraulic control system) ranged from 80°F to 89°F during the reporting period. This is slightly higher than measured during the first eight weeks of system operation (70°F to 77°F).
- Vacuum influence continues to be measured in the monitoring wells located within the Mechanical Room (e.g., MW-28, MW-32 and MW-41), some of them located over 30 feet from recovery wells MW-27R and/or MW-42R and showing a demonstrable negative pressure regime indicative of effects from the subslab ventilation system.
- Filtration breakthrough of VOCs has been detected in the aqueous phase treatment system since September 2012, when VC was detected in the effluent. The DPI discharge permit does not have limits for VOC discharges, therefore this is not a concern at this time.
- The discharge permit limit on PCB concentrations in the effluent is 5 µg/L. PCBs have not been detected in the aqueous phase treatment system effluent. Therefore, replacing the aqueous phase carbon is not required at this time.
- The pump in recovery well MW-42R was not functioning properly for an undetermined period of time between July 27 and September 15, 2015, resulting in a lower than average flow rate. Additionally, relatively dry weather conditions may have resulted in a low groundwater table which may have also contributed to the lower than average flow rate.

3.3 Groundwater Monitoring

Between 2008 and 2015, groundwater sampling has been conducted periodically throughout the NBHS Campus. The results of these sampling events are summarized in Table 2. The following describes groundwater sampling conducted during the reporting period.

3.3.1 Groundwater Sampling Event – July 27, 2015

Groundwater samples were collected from five monitoring wells (MW-27R, MW-28, MW-32, MW-41 and MW-42R) on July 27, 2015. Monitoring wells were sampled in accordance with EPA Region 1 low-flow sampling techniques. The groundwater samples were submitted to Alpha for analysis of VOCs (SW-846 Method 8260B) and/or PCB Aroclors (SW-846 Method 8082). Filtered aliquots (0.45 micron filters) from monitoring wells MW-27R, MW-28, MW-41 and MW-42R were also analyzed for PCB Aroclors. Groundwater sampling forms are included in Appendix D. The results of these analyses are summarized in Table 2.

Monitoring wells MW-27R, MW-28, MW-32, MW-41 and MW-42R exhibited detectable concentrations of VOCs, as shown in Table 2. VC was detected in samples collected from monitoring wells MW-38, MW-41 and MW-42R at concentrations exceeding the MCP GW-2 standard and TCE was detected above the GW-2 standard in MW-27R and MW-41.

Unfiltered samples from wells MW-27R, MW-28, MW-41 and MW-42R exhibited detectable concentrations of PCB Aroclors (including one sample from MW-28 which exceeded the GW-2 standard). These concentrations were reduced when the samples were filtered through the 0.45 micron filter. Analytical results for each sample analyzed for PCBs are listed below in µg/L:

Monitoring Well ID	Unfiltered Result (µg/L)	0.45µ Filter Result (µg/L)
MW-27R	1.23	<0.250 (ND)
MW-28	6.53	<0.250 (ND)
MW-32	<0.250	NA
MW-41	3.0	<0.250 (ND)
MW-42R	0.548	<0.250 (ND)

NA: not analyzed
ND: not detected above the specified laboratory reporting detection limit
<: less than

3.4 Management of Remedial Wastewater and Remediation Wastes

In accordance with 310 CMR 40.0425(3)(c), this section describes the management of remedial wastewaters, remediation wastes, and investigative wastes associated with this IRA.

3.4.1 Management of Remedial Wastewater

Groundwater extracted and treated under the IRA Plan Modification dated February 24, 2012 (TRC, 2012a) is discharged from the hydraulic control system to the municipal sanitary sewer system via a floor drain located in the former incinerator pit. Discharge to the sanitary sewer system is conducted in accordance with the Industrial Discharge Permit (#S-123) obtained by TRC from the City's DPI. The remedial wastewater has been managed in a manner consistent with 310 CMR 40.0041, General Provisions for the Management of Remedial Wastewater and/or Remedial Additives; 310 CMR 40.0043: Remedial Wastewater Discharges to Publicly Owned

Treatment Works (POTW); and 310 CMR 40.0047, Reporting Requirements for Discharges of Remedial Wastewater and Remedial Additives.

3.4.2 Management of Other Remediation Wastes

Other waste products generated by the hydraulic control system include spent bag filters, spent activated carbon, spent organo-clay, and sediments accumulated in the settling tanks. These wastes have been managed or will be managed in accordance with 310 CMR 40.0030: Management Procedures for Remediation Waste.

- Bag filters are replaced periodically, with spent bag filters accumulated in a drum located adjacent to the treatment system. When the accumulation drum is full, it will be removed for appropriate off-site disposal.

- Activated carbon (and previously, organo-clay) utilized in groundwater treatment are periodically replaced with fresh material, at which time the spent carbon (or organo-clay) is removed for appropriate off-site disposal.

- Sediment has accumulated in the settling tanks since system startup. This sediment will be removed for off-site disposal at a future date.

During this reporting period, bag filters were accumulated and managed in the manner described above but neither spent activated carbon or sediment wastes were generated and no remediation wastes were transported from the Site for off-site disposal.

3.4.3 Management of Investigation Wastes

Waste products generated by investigation activities include purge water and used personal protective equipment (PPE).

- Purge water generated during well development and groundwater sampling is treated by the groundwater treatment system and discharged to the POTW under permit #S-123.

- Used PPE is placed in an accumulation drum located adjacent to the treatment system. When the accumulation drum is full, it will be removed for appropriate off-site disposal.

During this reporting period, purge water and PPE were generated and managed as described above.

3.4.4 Cumulative Record of Remediation Waste Management

Other than the continuous discharges of treated groundwater to the POTW, no remediation wastes were transported from the Site for off-site disposal during this reporting period. A cumulative record of remediation wastes previously transported from this Site for off-site disposal is provided in the following table.

Description	Transport Date	Amount		Receiving Facility
Well development and purge water	03/25/10	3 drums	1200 lbs.	Triumvirate Environmental, Inc.
Well development and purge water	04/26/10	3 drums	1200 lbs.	Triumvirate Environmental, Inc.
Soil cuttings from drilling activities	02/25/11	3 drums	1700 lbs.	Triumvirate Environmental, Inc.
Vacuum truck - groundwater plus accumulated purge water from drums	02/25/11		590 gallons	United Oil Recovery, Inc, Meriden, CT
Vacuum truck - groundwater	03/21/11		490 gallons	United Oil Recovery, Inc, Meriden, CT
Vacuum truck - groundwater	04/05/11		609 gallons	United Oil Recovery, Inc, Meriden, CT
Vacuum truck - groundwater	04/25/11		671 gallons	United Oil Recovery, Inc, Meriden, CT
Vacuum truck - groundwater	07/28/11		609 gallons	United Oil Recovery, Inc, Meriden, CT
Liquid waste - PCB contaminated	08/16/11	2 drums	300 lbs.	CWM Chemical Services, LLC, Model City, NY
Liquid waste - PCB contaminated	08/19/11	3 drums	450 lbs.	CWM Chemical Services, LLC, Model City, NY
Liquid waste - PCB contaminated	08/19/11	2 Tote Pack	500 lbs.	CWM Chemical Services, LLC, Model City, NY
Solid waste - PCB contaminated	08/19/11	1 drum	200 lbs.	CWM Chemical Services, LLC, Model City, NY
Solid waste - PCB contaminated	08/19/11	1 drum	150 lbs.	CWM Chemical Services, LLC, Model City, NY
Solid waste - PCB contaminated	08/24/11	1 CY box	75 lbs.	CWM Chemical Services, LLC, Model City, NY
PPE and spent bag filters w/PCBs	01/30/13	1 drum	40 lbs.	Enpro, Williston, VT
Spent carbon w/ PCBs	01/30/13	2 drums	60 lbs.	Enpro, Williston, VT
Soil cuttings w/PCBs	01/30/13	2 drums	280 lbs.	Enpro, Williston, VT
Concrete cores - No PCBs	01/30/13	1 drum	45 lbs.	Enpro, Williston, VT
Solid waste - PCB contaminated - spent carbon	4/14/2014	1 drum	110 lbs.	Clean Harbors, Deer Park, TX
Solid waste - PCB contaminated - bag filters	4/14/2014	1 drum	80 lbs.	Clean Harbors Grassy Mountain, Clive, UT

3.5 Strategy for IRA Completion

The IRA Plan at this Site includes investigation, evaluation, and mitigation measures specified in Section 2.5 of this report. As of November 2014, each of the investigation and evaluation activities have been completed. Mitigation measures also appear to be complete; however, shutdown of the subslab venting system requires assessment over a two-year period[6].

The Vapor Intrusion Guidance (MassDEP, 2014) recommends a minimum of three IA sample rounds over a period of two years, with at least one event during the heating season and one

[6] Closure Sampling procedures are described in the MassDEP Public Review Draft Vapor Intrusion Guidance WSC-14-435 (MassDEP, 2014).

shut down for at least seven days prior to sampling. The September 2014 IA sampling event was the first round in the closure sampling sequence for NBHS. The second closure round was conducted during the holiday vacation period in December 2014 and January 2015. The third closure sampling round was conducted during the summer vacation period during June and July 2015. A fourth event is planned during the upcoming vacation period in December 2015 and January 2016, as a conservative measure.

If IA concentrations continue to be found to be acceptable after the completion of two years of testing in this manner, then the hydraulic control and subslab venting systems will be shut down and an IRA Completion Report will be prepared.

3.6 LSP Opinion

The objectives of this IRA have been to characterize soil, groundwater, seep water, soil vapor and indoor air to determine if vapor migration has occurred, to characterize VOCs in subsurface storm sewer lines and sanitary sewer lines to determine if VOC migration from the groundwater to the storm and sanitary sewer infrastructure has occurred, and to implement mitigation measures associated with the SRM condition at the NBHS building.

The IRA Plan Modifications dated January 18, 2011 (TRC, 2011a) and February 24, 2012 (TRC, 2012) added to the previously approved IRA activities for the removal of chlorinated VOC-impacted groundwater in the vicinity of MW-27. The additional activities conducted under the second IRA Plan Modification are described in previous IRA Status reports, and include installation, operation and maintenance of a hydraulic control system in the vicinity of recovery wells MW-27R and MW-42R and further investigation of the soil, groundwater and NAPL.

This IRA Status Report has been prepared in accordance with 310 CMR 40.0425 as set forth in the MCP.

David M. Sullivan, LSP
TRC Environmental Corporation
Licensed Site Professional No. 1488

11/30/2015
Date

Stamp

4.0 REFERENCES

EPA, 2004 User's Guide for the AMS/EPA Regulatory Model – AERMOD. EPA-454/B-03-001. U.S. Environmental Protection Agency, Research Triangle Park, NC 27711.

EPA, 2009 Risk Management Program Guidance for Offsite Consequence Analysis, United States Environmental Protection Agency, Office of Solid Waste and Emergency Response, EPA 550-B-99-009, March 2009.

EPA, 2011 *ProUCL version 4.1.01. July 2011.* *http://www.epa.gov/osp/hstl/tsc/software.htm*

EPA, 2012 *Regional Screening Levels (RSLs).* http://www.epa.gov/region9/superfund/prg/. November 2012.

MassDEP, 2014 *MassDEP Public Review Draft Vapor Intrusion Guidance* WSC-14-435

TRC, 2010a *Immediate Response Action Plan, New Bedford High School Substantial Release Migration / Critical Exposure Pathway, 230 Hathaway Boulevard, New Bedford, Massachusetts.* Prepared for: City of New Bedford Department of Environmental Stewardship. Prepared by: TRC Environmental Corporation. March 2010.

TRC, 2010b *Immediate Response Action Status Report - New Bedford High School Substantial Release Migration / Critical Exposure Pathway, 230 Hathaway Boulevard, New Bedford, Massachusetts.* Prepared for: City of New Bedford Department of Environmental Stewardship. Prepared by: TRC Environmental Corporation. May 2010.

TRC, 2010c *Immediate Response Action Status Report - New Bedford High School Substantial Release Migration / Critical Exposure Pathway, 230 Hathaway Boulevard, New Bedford, Massachusetts.* Prepared for: City of New Bedford Department of Environmental Stewardship. Prepared by: TRC Environmental Corporation. November 2010.

TRC, 2011a *Immediate Response Action Plan Modification - New Bedford High School, 230 Hathaway Boulevard, New Bedford, Massachusetts.* Prepared for: City of New Bedford Department of Environmental Stewardship. Prepared by: TRC Environmental Corporation. January 2011.

TRC, 2011b *Immediate Response Action Status Report - New Bedford High School Substantial Release Migration / Critical Exposure Pathway, 230 Hathaway Boulevard, New Bedford, Massachusetts.* Prepared for: City of New Bedford Department of Environmental Stewardship. Prepared by: TRC

Environmental Corporation. May 2011.

TRC, 2011c *Immediate Response Action Status Report - New Bedford High School Substantial Release Migration / Critical Exposure Pathway, 230 Hathaway Boulevard, New Bedford, Massachusetts.* Prepared for: City of New Bedford Department of Environmental Stewardship. Prepared by: TRC Environmental Corporation. November 2011.

TRC, 2012a *Immediate Response Action Plan Modification - New Bedford High School, 230 Hathaway Boulevard, New Bedford, Massachusetts.* Prepared for: City of New Bedford Department of Environmental Stewardship. Prepared by: TRC Environmental Corporation. February 2012.

TRC, 2012b *Immediate Response Action Status Report - New Bedford High School Substantial Release Migration / Critical Exposure Pathway, 230 Hathaway Boulevard, New Bedford, Massachusetts.* Prepared for: City of New Bedford Department of Environmental Stewardship. Prepared by: TRC Environmental Corporation. May 2012.

TRC, 2012c *Immediate Response Action Status Report - New Bedford High School Substantial Release Migration / Critical Exposure Pathway, 230 Hathaway Boulevard, New Bedford, Massachusetts.* Prepared for: City of New Bedford Department of Environmental Stewardship. Prepared by: TRC Environmental Corporation. November 2012.

TRC, 2013a *Immediate Response Action Status Report - New Bedford High School Substantial Release Migration / Critical Exposure Pathway, 230 Hathaway Boulevard, New Bedford, Massachusetts.* Prepared for: City of New Bedford Department of Environmental Stewardship. Prepared by: TRC Environmental Corporation. May 2013.

TRC, 2013b *Immediate Response Action Status Report - New Bedford High School Substantial Release Migration / Critical Exposure Pathway, 230 Hathaway Boulevard, New Bedford, Massachusetts.* Prepared for: City of New Bedford Department of Environmental Stewardship. Prepared by: TRC Environmental Corporation. December 2013.

TRC, 2014a *Immediate Response Action Status Report - New Bedford High School Substantial Release Migration / Critical Exposure Pathway, 230 Hathaway Boulevard, New Bedford, Massachusetts.* Prepared for: City of New Bedford Department of Environmental Stewardship. Prepared by: TRC Environmental Corporation. May 2014.

TRC, 2014b *Immediate Response Action Status Report - New Bedford High School Substantial Release Migration / Critical Exposure Pathway, 230 Hathaway Boulevard, New Bedford, Massachusetts.* Prepared for: City of New Bedford Department of Environmental Stewardship. Prepared by: TRC Environmental Corporation. November 2014.

TRC, 2015 *Immediate Response Action Status Report - New Bedford High School Substantial Release Migration / Critical Exposure Pathway, 230 Hathaway Boulevard, New Bedford, Massachusetts.* Prepared for: City of New Bedford Department of Environmental Stewardship. Prepared by: TRC Environmental Corporation. May 2015.

TABLES

Table 1
Summary of Analytical Results for Aqueous Seep Samples
2009 through 2013
New Bedford High School
New Bedford, Massachusetts

Analysis	Analyte		Sample Location:	**NBHSBRM**	**BRM-S-1**			**BRM-S-2**				**BRM-S-3**						**WEST SEEP**	**FIP-S-1**		
			Sample ID:	NBHSBRM	BRM-S-1			BRM-S-2			WEST SEEP	BRM-S-3				EAST SEEP		WEST SEEP	FIP-S-1		
			Sample Date:	2/20/2009	12/2/2009	1/7/2010	1/30/2010	12/2/2009	1/7/2010	1/30/2010	2/27/2012	12/2/2009	1/7/2010	1/30/2010	1/30/2010	2/27/2012	1/15/2013	1/15/2013	12/2/2009	1/7/2010	1/30/2010
		GW-2	GW-3												Field Dup						
VOCs																					
(ug/L)	Methylene Chloride	10,000	50,000	NA	5.0 U	5.0 U	1.0 U	5.0 U	5.0 U	1.0 U	2.0 U	5.0 U	5.0 U	1.0 U	1.0 U	20 U	2.0 U	2.0 U	5.0 U	5.0 U	1.0 U
	1,1-Dichloroethane	1,000	20,000	NA	1.0 U	1.0 U	1.0 U	1.0 U	1.0 U	1.0 U	1.0 U	1.0 U	1.0 U	1.0 U	1.0 U	10 U	1.0 U	1.0 U	1.0 U	1.0 U	1.0 U
	Chloroform	50	20,000	NA	2.0 U	2.0 U	1.0 U	2.0 U	2.0 U	1.0 U	1.0 U	2.0 U	2.0 U	1.0 U	1.0 U	10 U	1.0 U	1.0 U	2.0 U	2.0 U	1.0 U
	Carbon Tetrachloride	2	5,000	NA	1.0 U	1.0 U	1.0 U	1.0 U	1.0 U	1.0 U	1.0 U	1.0 U	1.0 U	1.0 U	1.0 U	10 U	1.0 U	1.0 U	1.0 U	1.0 U	1.0 U
	1,2-Dichloropropane	3	50,000	NA	1.0 U	1.0 U	1.0 U	1.0 U	1.0 U	1.0 U	1.0 U	1.0 U	1.0 U	1.0 U	1.0 U	10 U	1.0 U	1.0 U	1.0 U	1.0 U	1.0 U
	Chlorodibromomethane	20	50,000	NA	0.50 U	10 U	1.0 U	0.50 U	10 U	1.0 U	1.0 U	0.50 U	10 U	1.0 U	1.0 U	10 U	1.0 U	1.0 U	0.50 U	10 U	1.0 U
	1,1,2-Trichloroethane	900	50,000	NA	1.0 U	1.0 U	1.0 U	1.0 U	1.0 U	1.0 U	1.0 U	1.0 U	1.0 U	1.0 U	1.0 U	10 U	1.0 U	1.0 U	1.0 U	1.0 U	1.0 U
	Tetrachloroethylene	50	30,000	NA	1.0 U	1.0 U	1.0 U	1.0 U	1.0 U	1.0 U	1.0 U	1.0 U	1.0 U	1.0 U	1.0 U	10 U	1.0 U	1.0 U	1.0 U	1.0 U	1.0 U
	Chlorobenzene	200	1,000	NA	1.0 U	1.0 U	1.0 U	1.0 U	1.0 U	1.0 U	1.0 U	1.0 U	**9.5**	1.0 U	1.0 U	10 U	1.0 U	1.0 U	1.0 U	1.0 U	1.0 U
	Trichlorofluoromethane (Freon 11)	NS	NS	NA	2.0 U	2.0 U	2.0 U	2.0 U	2.0 U	2.0 U	2.0 U	2.0 U	2.0 U	2.0 U	2.0 U	20 U	2.0 U	2.0 U	2.0 U	2.0 U	2.0 U
	1,2-Dichloroethane	5	20,000	NA	1.0 U	1.0 U	1.0 U	1.0 U	1.0 U	1.0 U	1.0 U	1.0 U	1.0 U	1.0 U	1.0 U	10 U	1.0 U	1.0 U	1.0 U	1.0 U	1.0 U
	1,1,1-Trichloroethane	4,000	20,000	NA	1.0 U	1.0 U	1.0 U	1.0 U	1.0 U	1.0 U	1.0 U	1.0 U	1.0 U	1.0 U	1.0 U	10 U	1.0 U	1.0 U	1.0 U	1.0 U	1.0 U
	Bromodichloromethane	6	50,000	NA	1.0 U	5.0 U	1.0 U	1.0 U	5.0 U	1.0 U	1.0 U	1.0 U	5.0 U	1.0 U	1.0 U	10 U	1.0 U	1.0 U	1.0 U	5.0 U	1.0 U
	trans-1,3-Dichloropropene	10[2]	200[2]	NA	0.50 U	5.0 U	0.50 U	0.50 U	5.0 U	0.50 U	0.50 U	0.50 U	5.0 U	0.50 U	0.50 U	5.0 U	0.50 U	0.50 U	0.50 U	5.0 U	0.50 U
	cis-1,3-Dichloropropene	10[2]	200[2]	NA	0.50 U	5.0 U	0.50 U	0.50 U	5.0 U	0.50 U	0.50 U	0.50 U	5.0 U	0.50 U	0.50 U	5.0 U	0.50 U	0.50 U	0.50 U	5.0 U	0.50 U
	1,1-Dichloropropene	NS	NS	NA	2.0 U	2.0 U	1.0 U	2.0 U	2.0 U	1.0 U	2.0 U	2.0 U	2.0 U	1.0 U	1.0 U	20 U	2.0 U	2.0 U	2.0 U	2.0 U	1.0 U
	Bromoform	700	50,000	NA	5.0 U	10 U	1.0 U	5.0 U	10 U	1.0 U	2.0 U	5.0 U	10 U	1.0 U	1.0 U	20 U	2.0 U	2.0 U	5.0 U	10 U	1.0 U
	1,1,2,2-Tetrachloroethane	9	50,000	NA	0.50 U	0.50 U	2.0 U	0.50 U	0.50 U	2.0 U	1.0 U	0.50 U	0.50 U	2.0 U	2.0 U	10 U	1.0 U	1.0 U	0.50 U	0.50 U	2.0 U
	Benzene	2,000	10,000	NA	1.0 U	1.0 U	1.0 U	1.0 U	1.0 U	1.0 U	0.50 U	1.0 U	1.0 U	1.0 U	1.0 U	5.0 U	0.50 U	0.50 U	1.0 U	1.0 U	1.0 U
	Toluene	50,000	40,000	NA	1.0 U	1.0 U	1.0 U	1.0 U	1.0 U	1.0 U	1.0 U	1.0 U	1.0 U	1.0 U	1.0 U	10 U	1.0 U	1.0 U	1.0 U	1.0 U	1.0 U
	Ethylbenzene	20,000	5,000	NA	1.0 U	1.0 U	1.0 U	1.0 U	1.0 U	1.0 U	1.0 U	1.0 U	1.0 U	1.0 U	1.0 U	10 U	1.0 U	1.0 U	1.0 U	1.0 U	1.0 U
	Chloromethane	NS	NS	NA	2.0 U	2.0 U	1.0 U	2.0 U	2.0 U	1.0 U	2.0 U	2.0 U	2.0 U	1.0 U	1.0 U	20 U	2.0 U	2.0 U	2.0 U	2.0 U	1.0 U
	Bromomethane	7	800	NA	2.0 U	2.0 U	5.0 U	2.0 U	2.0 U	5.0 U	2.0 U	2.0 U	2.0 U	5.0 U	5.0 U	20 U	2.0 U	2.0 U	2.0 U	2.0 U	5.0 U
	Vinyl Chloride	2	50,000	NA	2.0 U	2.0 U	1.0 U	2.0 U	2.0 U	1.0 U	1.0 U	**2.1**	**34**	**1.4**	**1.3**	10 U	1.0 U	1.0 U	2.0 U	2.0 U	**1.3**
	Chloroethane	NS	NS	NA	2.0 U	2.0 U	1.0 U	2.0 U	2.0 U	1.0 U	2.0 U	2.0 U	2.0 U	1.0 U	1.0 U	20 U	2.0 U	2.0 U	2.0 U	2.0 U	1.0 U
	1,1-Dichloroethylene	80	30,000	NA	1.0 U	1.0 U	1.0 U	1.0 U	1.0 U	1.0 U	1.0 U	1.0 U	1.0 U	1.0 U	1.0 U	10 U	1.0 U	1.0 U	1.0 U	1.0 U	1.0 U
	trans-1,2-Dichloroethylene	90	50,000	NA	1.0 U	1.0 U	1.0 U	1.0 U	1.0 U	1.0 U	1.0 U	**14**	**57**	**8.2**	**8.1**	10 U	1.0 U	1.0 U	1.0 U	**1.0**	**1.4**
	Trichloroethylene	30	5,000	NA	1.0 U	1.0 U	1.0 U	1.0 U	1.0 U	1.0 U	1.0 U	1.0 U	**6.0**	**1.2**	**1.3**	10 U	1.0 U	1.0 U	1.0 U	1.0 U	1.0 U
	1,2-Dichlorobenzene	2,000	2,000	NA	1.0 U	1.0 U	1.0 U	1.0 U	1.0 U	1.0 U	1.0 U	1.0 U	1.0 U	1.0 U	1.0 U	10 U	1.0 U	1.0 U	1.0 U	1.0 U	1.0 U
	1,3-Dichlorobenzene	2,000	50,000	NA	1.0 U	1.0 U	1.0 U	1.0 U	1.0 U	1.0 U	1.0 U	1.0 U	**1.6**	1.0 U	1.0 U	10 U	1.0 U	1.0 U	1.0 U	1.0 U	1.0 U
	1,4-Dichlorobenzene	200	8,000	NA	1.0 U	1.0 U	1.0 U	1.0 U	1.0 U	1.0 U	1.0 U	1.0 U	**6.8**	1.0 U	1.0 U	10 U	1.0 U	1.0 U	1.0 U	1.0 U	1.0 U
	Methyl tert-Butyl Ether (MTBE)	50,000	50,000	NA	1.0 U	1.0 U	2.0 U	1.0 U	1.0 U	2.0 U	2.0 U	1.0 U	1.0 U	2.0 U	2.0 U	20 U	2.0 U	2.0 U	1.0 U	1.0 U	2.0 U
	m+p Xylene	9,000	5,000	NA	2.0 U	2.0 U	2.0 U	2.0 U	2.0 U	2.0 U	2.0 U	2.0 U	2.0 U	2.0 U	2.0 U	20 U	2.0 U	2.0 U	2.0 U	2.0 U	2.0 U
	o-Xylene	9,000	5,000	NA	1.0 U	1.0 U	2.0 U	1.0 U	1.0 U	2.0 U	1.0 U	1.0 U	1.0 U	2.0 U	2.0 U	10 U	1.0 U	1.0 U	1.0 U	1.0 U	2.0 U
	cis-1,2-Dichloroethylene	100	50,000	NA	1.0 U	1.0 U	1.0 U	1.0 U	1.0 U	1.0 U	1.0 U	**54**	**180**	**24**	**23**	10 U	1.0 U	1.0 U	1.0 U	**5.6**	**7.2**
	Dibromomethane	NS	NS	NA	1.0 U	1.0 U	1.0 U	1.0 U	1.0 U	1.0 U	2.0 U	1.0 U	1.0 U	1.0 U	1.0 U	20 U	2.0 U	2.0 U	1.0 U	1.0 U	1.0 U
	1,2,3-Trichloropropane	NS	NS	NA	2.0 U	2.0 U	1.0 U	2.0 U	2.0 U	1.0 U	2.0 U	2.0 U	2.0 U	1.0 U	1.0 U	20 U	2.0 U	2.0 U	2.0 U	2.0 U	1.0 U
	Styrene	100	6,000	NA	1.0 U	1.0 U	1.0 U	1.0 U	1.0 U	1.0 U	1.0 U	1.0 U	1.0 U	1.0 U	1.0 U	10 U	1.0 U	1.0 U	1.0 U	1.0 U	1.0 U
	Dichlorodifluoromethane (Freon 12)	NS	NS	NA	2.0 U	2.0 U	1.0 U	2.0 U	2.0 U	1.0 U	2.0 U	2.0 U	2.0 U	1.0 U	1.0 U	20 U	2.0 U	2.0 U	2.0 U	2.0 U	1.0 U
	Acetone	50,000	50,000	NA	50 U	50 U	5.0 U	50 U	50 U	5.0 U	5.0 U	50 U	50 U	5.0 U	5.0 U	50 U	5.0 U	**8.9**	50 U	50 U	5.0 U
	Carbon Disulfide	NS	NS	NA	3.0 U	5.0 U	1.0 U	3.0 U	5.0 U	1.0 U	2.0 U	3.0 U	5.0 U	1.0 U	1.0 U	20 U	2.0 U	2.0 U	3.0 U	5.0 U	1.0 U
	2-Butanone (MEK)	50,000	50,000	NA	20 U	20 U	10 U	20 U	20 U	10 U	5.0 U	20 U	20 U	10 U	10 U	50 U	5.0 U	5.0 U	20 U	20 U	10 U
	4-Methyl-2-pentanone (MIBK)	50,000	50,000	NA	10 U	10 U	5.0 U	10 U	10 U	5.0 U	5.0 U	10 U	10 U	5.0 U	5.0 U	50 U	5.0 U	5.0 U	10 U	10 U	5.0 U
	2-Hexanone (MBK)	NS	NS	NA	10 U	10 U	1.0 U	10 U	10 U	1.0 U	5.0 U	10 U	10 U	1.0 U	1.0 U	50 U	5.0 U	5.0 U	10 U	10 U	1.0 U
	Bromochloromethane	NS	NS	NA	1.0 U	1.0 U	1.0 U	1.0 U	1.0 U	1.0 U	2.0 U	1.0 U	1.0 U	1.0 U	1.0 U	20 U	2.0 U	2.0 U	1.0 U	1.0 U	1.0 U
	Tetrahydrofuran	NS	NS	NA	10 U	10 U	5.0 U	10 U	10 U	5.0 U	5.0 U	10 U	10 U	5.0 U	5.0 U	50 U	5.0 U	5.0 U	10 U	10 U	5.0 U
	2,2-Dichloropropane	NS	NS	NA	1.0 U	1.0 U	1.0 U	1.0 U	1.0 U	1.0 U	2.0 U	1.0 U	1.0 U	1.0 U	1.0 U	20 U	2.0 U	2.0 U	1.0 U	1.0 U	1.0 U
	1,2-Dibromoethane (EDB)	2	50,000	NA	0.50 U	0.50 U	1.0 U	0.50 U	0.50 U	1.0 U	2.0 U	0.50 U	0.50 U	1.0 U	1.0 U	20 U	2.0 U	2.0 U	0.50 U	0.50 U	1.0 U
	1,3-Dichloropropane	NS	NS	NA	0.50 U	0.50 U	1.0 U	0.50 U	0.50 U	1.0 U	2.0 U	0.50 U	0.50 U	1.0 U	1.0 U	20 U	2.0 U	2.0 U	0.50 U	0.50 U	1.0 U
	1,1,1,2-Tetrachloroethane	10	50,000	NA	1.0 U	5.0 U	1.0 U	1.0 U	5.0 U	1.0 U	1.0 U	1.0 U	5.0 U	1.0 U	1.0 U	10 U	1.0 U	1.0 U	1.0 U	5.0 U	1.0 U
	Bromobenzene	NS	NS	NA	1.0 U	1.0 U	1.0 U	1.0 U	1.0 U	1.0 U	2.0 U	1.0 U	1.0 U	1.0 U	1.0 U	20 U	2.0 U	2.0 U	1.0 U	1.0 U	1.0 U
	n-Butylbenzene	7,000[1]	50,000[1]	NA	1.0 U	1.0 U	1.0 U	1.0 U	1.0 U	1.0 U	2.0 U	1.0 U	1.0 U	1.0 U	1.0 U	20 U	2.0 U	2.0 U	1.0 U	1.0 U	1.0 U
	sec-Butylbenzene	7,000[1]	50,000[1]	NA	1.0 U	1.0 U	1.0 U	1.0 U	1.0 U	1.0 U	2.0 U	1.0 U	1.0 U	1.0 U	1.0 U	20 U	2.0 U	2.0 U	1.0 U	1.0 U	1.0 U
	tert-Butylbenzene	7,000[1]	50,000[1]	NA	1.0 U	1.0 U	1.0 U	1.0 U	1.0 U	1.0 U	2.0 U	1.0 U	1.0 U	1.0 U	1.0 U	20 U	2.0 U	2.0 U	1.0 U	1.0 U	1.0 U
	2-Chlorotoluene	NS	NS	NA	1.0 U	1.0 U	1.0 U	1.0 U	1.0 U	1.0 U	2.0 U	1.0 U	1.0 U	1.0 U	1.0 U	20 U	2.0 U	2.0 U	1.0 U	1.0 U	1.0 U

Table 1
Summary of Analytical Results for Aqueous Seep Samples
2009 through 2013
New Bedford High School
New Bedford, Massachusetts

Analysis	Analyte	Sample Location:		**NBHSBRM**	**BRM-S-1**			**BRM-S-2**				**BRM-S-3**						**WEST SEEP**	**FIP-S-1**		
		Sample ID:		NBHSBRM	BRM-S-1			BRM-S-2			WEST SEEP	BRM-S-3				EAST SEEP		WEST SEEP	FIP-S-1		
		Sample Date:		2/20/2009	12/2/2009	1/7/2010	1/30/2010	12/2/2009	1/7/2010	1/30/2010	2/27/2012	12/2/2009	1/7/2010	1/30/2010	1/30/2010	2/27/2012	1/15/2013	1/15/2013	12/2/2009	1/7/2010	1/30/2010
		GW-2	GW-3												Field Dup						
	4-Chlorotoluene	NS	NS	NA	1.0 U	1.0 U	1.0 U	1.0 U	1.0 U	1.0 U	2.0 U	1.0 U	1.0 U	1.0 U	1.0 U	20 U	2.0 U	2.0 U	1.0 U	1.0 U	1.0 U
	1,2-Dibromo-3-chloropropane (DBCP)	NS	NS	NA	5.0 U	10 U	5.0 U	5.0 U	10 U	5.0 U	2.0 U	5.0 U	10 U	5.0 U	5.0 U	20 U	2.0 U	2.0 U	5.0 U	10 U	5.0 U
	Hexachlorobutadiene	1	3,000	NA	1.0 U	1.0 U	0.50 U	1.0 U	1.0 U	0.50 U	0.60 U	1.0 U	1.0 U	0.50 U	0.50 U	6.0 U	0.60 U	0.60 U	1.0 U	1.0 U	0.50 U
	Isopropylbenzene (Cumene)	7,000[1]	50,000[1]	NA	1.0 U	1.0 U	1.0 U	1.0 U	1.0 U	1.0 U	2.0 U	1.0 U	1.0 U	1.0 U	1.0 U	20 U	2.0 U	2.0 U	1.0 U	1.0 U	1.0 U
	p-Isopropyltoluene (p-Cymene)	7,000[1]	50,000[1]	NA	1.0 U	1.0 U	1.0 U	1.0 U	1.0 U	1.0 U	2.0 U	1.0 U	1.0 U	1.0 U	1.0 U	20 U	2.0 U	2.0 U	1.0 U	1.0 U	1.0 U
	Naphthalene	1,000	20,000	NA	5.0 U	2.0 U	5.0 U	5.0 U	2.0 U	5.0 U	2.0 U	5.0 U	2.0 U	5.0 U	5.0 U	20 U	2.0 U	2.0 U	5.0 U	2.0 U	5.0 U
	n-Propylbenzene	7,000[1]	50,000[1]	NA	1.0 U	1.0 U	1.0 U	1.0 U	1.0 U	1.0 U	2.0 U	1.0 U	1.0 U	1.0 U	1.0 U	20 U	2.0 U	2.0 U	1.0 U	1.0 U	1.0 U
	1,2,3-Trichlorobenzene	NS	NS	NA	5.0 U	5.0 U	2.0 U	5.0 U	5.0 U	2.0 U	2.0 U	5.0 U	5.0 U	2.0 U	2.0 U	20 U	2.0 U	2.0 U	5.0 U	5.0 U	2.0 U
	1,2,4-Trichlorobenzene	2,000	50,000	NA	5.0 U	1.0 U	2.0 U	5.0 U	1.0 U	2.0 U	2.0 U	5.0 U	1.0 U	2.0 U	2.0 U	20 U	2.0 U	2.0 U	5.0 U	1.0 U	2.0 U
	1,3,5-Trimethylbenzene	7,000[1]	50,000[1]	NA	1.0 U	1.0 U	1.0 U	1.0 U	1.0 U	1.0 U	2.0 U	1.0 U	1.0 U	1.0 U	1.0 U	20 U	2.0 U	2.0 U	1.0 U	1.0 U	1.0 U
	1,2,4-Trimethylbenzene	7,000[1]	50,000[1]	NA	1.0 U	1.0 U	1.0 U	1.0 U	1.0 U	1.0 U	2.0 U	1.0 U	1.0 U	1.0 U	1.0 U	20 U	2.0 U	2.0 U	1.0 U	1.0 U	1.0 U
	Diethyl Ether	NS	NS	NA	2.0 U	2.0 U	2.0 U	2.0 U	2.0 U	2.0 U	2.0 U	2.0 U	2.0 U	2.0 U	2.0 U	20 U	2.0 U	2.0 U	2.0 U	2.0 U	2.0 U
	Diisopropyl Ether (DIPE)	NS	NS	NA	0.50 U	0.50 U	2.0 U	0.50 U	0.50 U	2.0 U	2.0 U	0.50 U	0.50 U	2.0 U	2.0 U	20 U	2.0 U	2.0 U	0.50 U	0.50 U	2.0 U
	tert-Butyl Ethyl Ether (TBEE)	NS	NS	NA	0.50 U	0.50 U	2.0 U	0.50 U	0.50 U	2.0 U	2.0 U	0.50 U	0.50 U	2.0 U	2.0 U	20 U	2.0 U	2.0 U	0.50 U	0.50 U	2.0 U
	tert-Amyl Methyl Ether (TAME)	NS	NS	NA	0.50 U	0.50 U	2.0 U	0.50 U	0.50 U	2.0 U	2.0 U	0.50 U	0.50 U	2.0 U	2.0 U	20 U	2.0 U	2.0 U	0.50 U	0.50 U	2.0 U
	1,4-Dioxane	6,000	50,000	NA	50 U	50 U	100 U	50 U	50 U	100 U	250 U	50 U	50 U	100 U	100 U	2,500 U	250 U	250 U	50 U	50 U	100 U
EPH																					
(ug/L)	C9-C18 Aliphatics	5,000	50,000	NA	150 U	NA	NA	150 U	NA	NA	NA	150 U	NA	NA	NA	NA	NA	NA	150 U	NA	NA
	C19-C36 Aliphatics	NS	50,000	NA	**190**	NA	NA	150 U	NA	NA	NA	150 U	NA	NA	NA	NA	NA	NA	150 U	NA	NA
	C11-C22 Aromatics	50,000	5,000	NA	100 U	NA	NA	100 U	NA	NA	NA	100 U	NA	NA	NA	NA	NA	NA	100 U	NA	NA
	Acenaphthene	NS	6,000	NA	2.0 U	NA	NA	2.0 U	NA	NA	NA	2.0 U	NA	NA	NA	NA	NA	NA	2.0 U	NA	NA
	Acenaphthylene	10,000	40	NA	2.0 U	NA	NA	2.0 U	NA	NA	NA	2.0 U	NA	NA	NA	NA	NA	NA	2.0 U	NA	NA
	Anthracene	NS	30	NA	2.0 U	NA	NA	2.0 U	NA	NA	NA	2.0 U	NA	NA	NA	NA	NA	NA	2.0 U	NA	NA
	Benzo(a)anthracene	NS	1,000	NA	2.0 U	NA	NA	2.0 U	NA	NA	NA	2.0 U	NA	NA	NA	NA	NA	NA	2.0 U	NA	NA
	Benzo(a)pyrene	NS	500	NA	2.0 U	NA	NA	2.0 U	NA	NA	NA	2.0 U	NA	NA	NA	NA	NA	NA	2.0 U	NA	NA
	Benzo(b)fluoranthene	NS	400	NA	2.0 U	NA	NA	2.0 U	NA	NA	NA	2.0 U	NA	NA	NA	NA	NA	NA	2.0 U	NA	NA
	Benzo(g,h,i)perylene	NS	20	NA	2.0 U	NA	NA	2.0 U	NA	NA	NA	2.0 U	NA	NA	NA	NA	NA	NA	2.0 U	NA	NA
	Benzo(k)fluoranthene	NS	100	NA	2.0 U	NA	NA	2.0 U	NA	NA	NA	2.0 U	NA	NA	NA	NA	NA	NA	2.0 U	NA	NA
	Chrysene	NS	70	NA	2.0 U	NA	NA	2.0 U	NA	NA	NA	2.0 U	NA	NA	NA	NA	NA	NA	2.0 U	NA	NA
	Dibenz(a,h)anthracene	NS	40	NA	2.0 U	NA	NA	2.0 U	NA	NA	NA	2.0 U	NA	NA	NA	NA	NA	NA	2.0 U	NA	NA
	Fluoranthene	NS	200	NA	2.0 U	NA	NA	2.0 U	NA	NA	NA	2.0 U	NA	NA	NA	NA	NA	NA	2.0 U	NA	NA
	Fluorene	NS	40	NA	2.0 U	NA	NA	2.0 U	NA	NA	NA	2.0 U	NA	NA	NA	NA	NA	NA	2.0 U	NA	NA
	Indeno(1,2,3-cd)pyrene	NS	100	NA	2.0 U	NA	NA	2.0 U	NA	NA	NA	2.0 U	NA	NA	NA	NA	NA	NA	2.0 U	NA	NA
	2-Methylnaphthalene	2,000	20,000	NA	2.0 U	NA	NA	2.0 U	NA	NA	NA	2.0 U	NA	NA	NA	NA	NA	NA	2.0 U	NA	NA
	Naphthalene	1,000	20,000	NA	2.0 U	NA	NA	2.0 U	NA	NA	NA	2.0 U	NA	NA	NA	NA	NA	NA	2.0 U	NA	NA
	Phenanthrene	NS	10,000	NA	2.0 U	NA	NA	2.0 U	NA	NA	NA	2.0 U	NA	NA	NA	NA	NA	NA	2.0 U	NA	NA
	Pyrene	NS	20	NA	2.0 U	NA	NA	2.0 U	NA	NA	NA	2.0 U	NA	NA	NA	NA	NA	NA	2.0 U	NA	NA
PAHs																					
(ug/L)	Acenaphthene	NS	6,000	NA	0.30 U	NA	NA	0.30 U	NA	NA	NA	0.30 U	NA	NA	NA	NA	NA	NA	0.30 U	NA	NA
	Acenaphthylene	10,000	40	NA	0.30 U	NA	NA	0.30 U	NA	NA	NA	0.30 U	NA	NA	NA	NA	NA	NA	0.30 U	NA	NA
	Anthracene	NS	30	NA	0.20 U	NA	NA	0.20 U	NA	NA	NA	0.20 U	NA	NA	NA	NA	NA	NA	0.20 U	NA	NA
	Benzo(a)anthracene	NS	1,000	NA	0.050 U	NA	NA	0.050 U	NA	NA	NA	0.050 U	NA	NA	NA	NA	NA	NA	0.050 U	NA	NA
	Benzo(a)pyrene	NS	500	NA	0.10 U	NA	NA	0.10 U	NA	NA	NA	0.10 U	NA	NA	NA	NA	NA	NA	0.10 U	NA	NA
	Benzo(b)fluoranthene	NS	400	NA	0.050 U	NA	NA	0.050 U	NA	NA	NA	0.050 U	NA	NA	NA	NA	NA	NA	0.050 U	NA	NA
	Benzo(g,h,i)perylene	NS	20	NA	0.50 U	NA	NA	0.50 U	NA	NA	NA	0.50 U	NA	NA	NA	NA	NA	NA	0.50 U	NA	NA
	Benzo(k)fluoranthene	NS	100	NA	0.20 U	NA	NA	0.20 U	NA	NA	NA	0.20 U	NA	NA	NA	NA	NA	NA	0.20 U	NA	NA
	Chrysene	NS	70	NA	0.20 U	NA	NA	0.20 U	NA	NA	NA	0.20 U	NA	NA	NA	NA	NA	NA	0.20 U	NA	NA
	Dibenz(a,h)anthracene	NS	40	NA	0.20 U	NA	NA	0.20 U	NA	NA	NA	0.20 U	NA	NA	NA	NA	NA	NA	0.20 U	NA	NA
	Fluoranthene	NS	200	NA	0.50 U	NA	NA	0.50 U	NA	NA	NA	0.50 U	NA	NA	NA	NA	NA	NA	0.50 U	NA	NA
	Fluorene	NS	40	NA	1.0 U	NA	NA	1.0 U	NA	NA	NA	1.0 U	NA	NA	NA	NA	NA	NA	1.0 U	NA	NA
	Indeno(1,2,3-cd)pyrene	NS	100	NA	0.20 U	NA	NA	0.20 U	NA	NA	NA	0.20 U	NA	NA	NA	NA	NA	NA	0.20 U	NA	NA
	2-Methylnaphthalene	2,000	20,000	NA	1.0 U	NA	NA	1.0 U	NA	NA	NA	1.0 U	NA	NA	NA	NA	NA	NA	1.0 U	NA	NA
	Naphthalene	1,000	20,000	NA	1.0 U	NA	NA	1.0 U	NA	NA	NA	1.0 U	NA	NA	NA	NA	NA	NA	1.0 U	NA	NA
	Phenanthrene	NS	10,000	NA	0.050 U	NA	NA	0.050 U	NA	NA	NA	0.050 U	NA	NA	NA	NA	NA	NA	0.050 U	NA	NA
	Pyrene	NS	20	NA	1.0 U	NA	NA	1.0 U	NA	NA	NA	1.0 U	NA	NA	NA	NA	NA	NA	1.0 U	NA	NA

Table 1
Summary of Analytical Results for Aqueous Seep Samples
2009 through 2013
New Bedford High School
New Bedford, Massachusetts

Analysis	Analyte	Sample Location:		NBHSBRM	BRM-S-1			BRM-S-2				BRM-S-3						WEST SEEP	FIP-S-1		
		Sample ID:		NBHSBRM	BRM-S-1			BRM-S-2			WEST SEEP	BRM-S-3				EAST SEEP		WEST SEEP	FIP-S-1		
		Sample Date:		2/20/2009	12/2/2009	1/7/2010	1/30/2010	12/2/2009	1/7/2010	1/30/2010	2/27/2012	12/2/2009	1/7/2010	1/30/2010	1/30/2010	2/27/2012	1/15/2013	1/15/2013	12/2/2009	1/7/2010	1/30/2010
		GW-2	GW-3												Field Dup						
PCBs																					
(ug/L)	Aroclor 1016	5	10	1.0 U	0.0500 U	NA	NA	0.0500 U	NA	NA	NA	0.0500 U	NA	NA	NA	NA	NA	NA	0.0500 U	NA	NA
	Aroclor 1221	5	10	1.0 U	0.0500 U	NA	NA	0.0500 U	NA	NA	NA	0.0500 U	NA	NA	NA	NA	NA	NA	0.0500 U	NA	NA
	Aroclor 1232	5	10	1.0 U	0.0500 U	NA	NA	0.0500 U	NA	NA	NA	0.0500 U	NA	NA	NA	NA	NA	NA	0.0500 U	NA	NA
	Aroclor 1242	5	10	1.0 U	0.0500 U	NA	NA	0.0500 U	NA	NA	NA	0.0500 U	NA	NA	NA	NA	NA	NA	0.0500 U	NA	NA
	Aroclor 1248	5	10	1.0 U	0.0500 U	NA	NA	0.0500 U	NA	NA	NA	0.0500 U	NA	NA	NA	NA	NA	NA	0.0500 U	NA	NA
	Aroclor 1254	5	10	1.0 U	0.0500 U	NA	NA	0.0500 U	NA	NA	NA	0.0500 U	NA	NA	NA	NA	NA	NA	0.0500 U	NA	NA
	Aroclor 1260	5	10	1.0 U	0.0500 U	NA	NA	0.0500 U	NA	NA	NA	0.0500 U	NA	NA	NA	NA	NA	NA	0.0500 U	NA	NA
	Total PCB Amount	5	10	1.0 U	0.0500 U	NA	NA	0.0500 U	NA	NA	NA	0.0500 U	NA	NA	NA	NA	NA	NA	0.0500 U	NA	NA
Metals, total																					
(ug/L)	Antimony	NS	8,000	40.0 U	40 U	NA	NA	40 U	NA	NA	NA	40 U	NA	NA	NA	NA	NA	NA	40 U	NA	NA
	Arsenic	NS	900	5.0 U	**9.2**	NA	NA	**11**	NA	NA	NA	**10**	NA	NA	NA	NA	NA	NA	**5.8**	NA	NA
	Barium	NS	50,000	**288**	**98**	NA	NA	**76**	NA	NA	NA	**140**	NA	NA	NA	NA	NA	NA	50 U	NA	NA
	Beryllium	NS	200	2.0 U	2.5 U	NA	NA	2.5 U	NA	NA	NA	2.5 U	NA	NA	NA	NA	NA	NA	2.5 U	NA	NA
	Cadmium	NS	4	**3.7**	2.5 U	NA	NA	2.5 U	NA	NA	NA	2.5 U	NA	NA	NA	NA	NA	NA	2.5 U	NA	NA
	Chromium	NS	300	**30.0**	5.0 U	NA	NA	5.0 U	NA	NA	NA	5.0 U	NA	NA	NA	NA	NA	NA	5.0 U	NA	NA
	Lead	NS	10	**50.8**	7.5 U	NA	NA	7.5 U	NA	NA	NA	**220**	NA	NA	NA	NA	NA	NA	7.5 U	NA	NA
	Mercury	NS	20	**0.36**	0.10 U	NA	NA	0.10 U	NA	NA	NA	0.10 U	NA	NA	NA	NA	NA	NA	0.10 U	NA	NA
	Nickel	NS	200	**26.0**	5.0 U	NA	NA	5.0 U	NA	NA	NA	5.0 U	NA	NA	NA	NA	NA	NA	5.0 U	NA	NA
	Selenium	NS	100	30.0 U	25 U	NA	NA	25 U	NA	NA	NA	25 U	NA	NA	NA	NA	NA	NA	25 U	NA	NA
	Silver	NS	7	3.0 U	2.5 U	NA	NA	2.5 U	NA	NA	NA	2.5 U	NA	NA	NA	NA	NA	NA	2.5 U	NA	NA
	Thallium	NS	3,000	30.0 U	30 U	NA	NA	30 U	NA	NA	NA	30 U	NA	NA	NA	NA	NA	NA	30 U	NA	NA
	Vanadium	NS	4,000	25.0 U	25 U	NA	NA	25 U	NA	NA	NA	25 U	NA	NA	NA	NA	NA	NA	25 U	NA	NA
	Zinc	NS	900	**1,870**	**260**	NA	NA	**51**	NA	NA	NA	**150**	NA	NA	NA	NA	NA	NA	**21**	NA	NA
Metals, dissolved																					
(ug/L)	Antimony	NS	8,000	NA	40 U	NA	NA	40 U	NA	NA	NA	40 U	NA	NA	NA	NA	NA	NA	40 U	NA	NA
	Arsenic	NS	900	NA	**6.5**	NA	NA	**8.9**	NA	NA	NA	**8.4**	NA	NA	NA	NA	NA	NA	**6.0**	NA	NA
	Barium	NS	50,000	NA	**79**	NA	NA	**73**	NA	NA	NA	**67**	NA	NA	NA	NA	NA	NA	50 U	NA	NA
	Beryllium	NS	200	NA	2.5 U	NA	NA	2.5 U	NA	NA	NA	2.5 U	NA	NA	NA	NA	NA	NA	2.5 U	NA	NA
	Cadmium	NS	4	NA	2.5 U	NA	NA	2.5 U	NA	NA	NA	2.5 U	NA	NA	NA	NA	NA	NA	2.5 U	NA	NA
	Chromium	NS	300	NA	5.0 U	NA	NA	5.0 U	NA	NA	NA	5.0 U	NA	NA	NA	NA	NA	NA	5.0 U	NA	NA
	Lead	NS	10	NA	7.5 U	NA	NA	7.5 U	NA	NA	NA	7.5 U	NA	NA	NA	NA	NA	NA	7.5 U	NA	NA
	Mercury	NS	20	NA	0.10 U	NA	NA	0.10 U	NA	NA	NA	0.10 U	NA	NA	NA	NA	NA	NA	0.10 U	NA	NA
	Nickel	NS	200	NA	5.0 U	NA	NA	5.0 U	NA	NA	NA	5.0 U	NA	NA	NA	NA	NA	NA	5.0 U	NA	NA
	Selenium	NS	100	NA	25 U	NA	NA	25 U	NA	NA	NA	25 U	NA	NA	NA	NA	NA	NA	25 U	NA	NA
	Silver	NS	7	NA	2.5 U	NA	NA	2.5 U	NA	NA	NA	2.5 U	NA	NA	NA	NA	NA	NA	2.5 U	NA	NA
	Thallium	NS	3,000	NA	30 U	NA	NA	30 U	NA	NA	NA	30 U	NA	NA	NA	NA	NA	NA	30 U	NA	NA
	Vanadium	NS	4,000	NA	25 U	NA	NA	25 U	NA	NA	NA	25 U	NA	NA	NA	NA	NA	NA	25 U	NA	NA
	Zinc	NS	900	NA	**160**	NA	NA	**43**	NA	NA	NA	**48**	NA	NA	NA	NA	NA	NA	**25**	NA	NA

Notes:
ug/L - micrograms per liter.
NA - Sample not analyzed for the listed analyte.
NS - No MassDEP standards exist for this compound.
U - Compound was not detected at specified quantitation limit.
Values in **Bold** indicate the compound was detected.
VOCs - Volatile Organic Compounds.
EPH - Extractable Petroleum Hydrocarbons.
PAHs - Polynuclear Aromatic Hydrocarbons.
PCBs - Polychlorinated Biphenyls.
(1) - MassDEP Method 1 standards for C9-C10 aromatic hydrocarbons used.
(2) - MassDEP Method 1 standards for 1,3-Dichloropropene used.

Table 2
Summary of Analytical Results for Groundwater Samples --
2008 through 2015
New Bedford High School
New Bedford, Massachusetts

Analysis	Analyte		Sample ID:	**CLEAN OUT**	**MW-4**						**MW-5**													**MW-5D**						
		Filter Size (micron)^:		N/A	N/A	N/A	N/A	N/A	N/A	N/A	N/A	N/A	N/A	N/A	N/A	N/A	N/A	N/A	N/A	N/A	N/A	N/A	N/A	N/A	N/A	N/A	N/A	N/A	N/A	N/A
		Sample Date:		4/28/2011	8/19/2008	8/19/2008	1/6/2010	2/17/2010	4/9/2010	9/13/2010	8/19/2008	1/6/2010	1/6/2010	2/17/2010	4/8/2010	9/10/2010	3/8/2011	4/11/2011	4/29/2011	8/24/2011	2/27/2012	4/10/2012	12/14/2012	9/10/2010	4/8/2011	4/28/2011	8/24/2011	2/27/2012	4/10/2012	12/14/2012
		GW-2	GW-3			Field Dup							Field Dup																	
VOCs																														
(ug/L)	Methylene Chloride	2,000	50,000	2.0 U	NA	NA	5.0 U	5.0 U	5.0 U	2.0 U	NA	5.0 U	5.0 U	5.0 U	5.0 U	2.0 U	2.0 U	2.0 U	2.0 U	2.0 U	2.0 U	2.0 U	2.0 U	2.0 U	2.0 U	2.0 U	2.0 U	2.0 U	2.0 U	2.0 U
	1,1-Dichloroethane	2,000	20,000	1.0 U	NA	NA	1.0 U	1.0 U	1.0 U	1.0 U	NA	1.0 U	1.0 U	1.0 U	1.0 U	1.0 U	1.0 U	1.0 U	1.0 U	1.0 U	1.0 U	1.0 U	1.0 U	1.0 U	1.0 U	1.0 U	1.0 U	1.0 U	1.0 U	1.0 U
	Chloroform	50	20,000	1.0 U	NA	NA	2.0 U	1.0 U	1.0 U	1.0 U	NA	2.0 U	2.0 U	1.0 U	1.0 U	1.0 U	1.0 U	1.0 U	1.0 U	1.0 U	1.0 U	1.0 U	1.0 U	1.0 U	1.0 U	1.0 U	1.0 U	1.0 U	1.0 U	1.0 U
	Carbon Tetrachloride	2	5,000	1.0 U	NA	NA	1.0 U	1.0 U	1.0 U	1.0 U	NA	1.0 U	1.0 U	1.0 U	1.0 U	1.0 U	1.0 U	1.0 U	1.0 U	1.0 U	1.0 U	1.0 U	1.0 U	1.0 U	1.0 U	1.0 U	1.0 U	1.0 U	1.0 U	1.0 U
	1,2-Dichloropropane	3	50,000	1.0 U	NA	NA	1.0 U	1.0 U	1.0 U	1.0 U	NA	1.0 U	1.0 U	1.0 U	1.0 U	1.0 U	1.0 U	1.0 U	1.0 U	1.0 U	1.0 U	1.0 U	1.0 U	1.0 U	1.0 U	1.0 U	1.0 U	1.0 U	1.0 U	1.0 U
	Chlorodibromomethane	20	50,000	1.0 U	NA	NA	10 U	1.0 U	1.0 U	1.0 U	NA	10 U	10 U	1.0 U	1.0 U	1.0 U	1.0 U	1.0 U	1.0 U	1.0 U	1.0 U	1.0 U	1.0 U	1.0 U	1.0 U	1.0 U	1.0 U	1.0 U	1.0 U	1.0 U
	1,1,2-Trichloroethane	900	50,000	1.0 U	NA	NA	1.0 U	1.0 U	1.0 U	1.0 U	NA	1.0 U	1.0 U	1.0 U	1.0 U	1.0 U	1.0 U	1.0 U	1.0 U	1.0 U	1.0 U	1.0 U	1.0 U	1.0 U	1.0 U	1.0 U	1.0 U	1.0 U	1.0 U	1.0 U
	Tetrachloroethylene	50	30,000	1.0 U	NA	NA	1.0 U	1.0 U	1.0 U	1.0 U	NA	1.0 U	1.0 U	1.0 U	1.0 U	1.0 U	1.0 U	1.0 U	1.0 U	1.0 U	1.0 U	1.0 U	1.0 U	1.0 U	1.0 U	1.0 U	1.0 U	1.0 U	1.0 U	1.0 U
	Chlorobenzene	200	1,000	1.0 U	NA	NA	1.0 U	1.0 U	1.0 U	1.0 U	NA	1.0 U	1.0 U	1.0 U	1.0 U	1.0 U	1.0 U	1.0 U	1.0 U	1.0 U	1.0 U	1.0 U	1.0 U	1.0 U	1.0 U	1.0 U	1.0 U	1.0 U	1.0 U	1.0 U
	Trichlorofluoromethane (Freon 11)	NS	NS	2.0 U	NA	NA	2.0 U	2.0 U	2.0 U	2.0 U	NA	2.0 U	2.0 U	2.0 U	2.0 U	2.0 U	2.0 U	2.0 U	2.0 U	2.0 U	2.0 U	2.0 U	2.0 U	2.0 U	2.0 U	2.0 U	2.0 U	2.0 U	2.0 U	2.0 U
	1,2-Dichloroethane	5	20,000	1.0 U	NA	NA	1.0 U	1.0 U	1.0 U	1.0 U	NA	1.0 U	1.0 U	1.0 U	1.0 U	1.0 U	1.0 U	1.0 U	1.0 U	1.0 U	1.0 U	1.0 U	1.0 U	1.0 U	1.0 U	1.0 U	1.0 U	1.0 U	1.0 U	1.0 U
	1,1,1-Trichloroethane	4,000	20,000	1.0 U	NA	NA	1.0 U	1.0 U	1.0 U	1.0 U	NA	1.0 U	1.0 U	1.0 U	1.0 U	1.0 U	1.0 U	1.0 U	1.0 U	1.0 U	1.0 U	1.0 U	1.0 U	1.0 U	1.0 U	1.0 U	1.0 U	1.0 U	1.0 U	1.0 U
	Bromodichloromethane	6	50,000	1.0 U	NA	NA	5.0 U	1.0 U	1.0 U	1.0 U	NA	5.0 U	5.0 U	1.0 U	1.0 U	1.0 U	1.0 U	1.0 U	1.0 U	1.0 U	1.0 U	1.0 U	1.0 U	1.0 U	1.0 U	1.0 U	1.0 U	1.0 U	1.0 U	1.0 U
	trans-1,3-Dichloropropene	10[2]	200[2]	0.50 U	NA	NA	5.0 U	0.50 U	0.50 U	0.50 U	NA	5.0 U	5.0 U	0.50 U	0.50 U	0.50 U	0.50 U	0.50 U	0.50 U	0.50 U	0.50 U	0.50 U	0.50 U	0.50 U	0.50 U	0.50 U	0.50 U	0.50 U	0.50 U	0.50 U
	cis-1,3-Dichloropropene	10[2]	200[2]	0.50 U	NA	NA	5.0 U	0.50 U	0.50 U	0.50 U	NA	5.0 U	5.0 U	0.50 U	0.50 U	0.50 U	0.50 U	0.50 U	0.50 U	0.50 U	0.50 U	0.50 U	0.50 U	0.50 U	0.50 U	0.50 U	0.50 U	0.50 U	0.50 U	0.50 U
	1,3-Dichloropropene, Total	10	200	NA	NA	NA	NA	NA	NA	NA	NA	NA	NA	NA	NA	NA	NA	NA	NA	NA	NA	NA	NA	NA	NA	NA	NA	NA	NA	NA
	1,1-Dichloropropene	NS	NS	2.0 U	NA	NA	2.0 U	2.0 U	2.0 U	2.0 U	NA	2.0 U	2.0 U	2.0 U	2.0 U	2.0 U	2.0 U	2.0 U	2.0 U	2.0 U	2.0 U	2.0 U	2.0 U	2.0 U	2.0 U	2.0 U	2.0 U	2.0 U	2.0 U	2.0 U
	Bromoform	700	50,000	2.0 U	NA	NA	10 U	2.0 U	2.0 U	2.0 U	NA	10 U	10 U	2.0 U	2.0 U	2.0 U	2.0 U	2.0 U	2.0 U	2.0 U	2.0 U	2.0 U	2.0 U	2.0 U	2.0 U	2.0 U	2.0 U	2.0 U	2.0 U	2.0 U
	1,1,2,2-Tetrachloroethane	9	50,000	1.0 U	NA	NA	0.50 U	1.0 U	1.0 U	1.0 U	NA	0.50 U	0.50 U	1.0 U	1.0 U	1.0 U	1.0 U	1.0 U	1.0 U	1.0 U	1.0 U	1.0 U	1.0 U	1.0 U	1.0 U	1.0 U	1.0 U	1.0 U	1.0 U	1.0 U
	Benzene	1,000	10,000	1.0 U	NA	NA	1.0 U	1.0 U	1.0 U	1.0 U	NA	1.0 U	1.0 U	1.0 U	1.0 U	1.0 U	1.0 U	1.0 U	1.0 U	0.50 U	0.50 U	0.50 U	0.50 U	1.0 U	1.0 U	1.0 U	0.50 U	0.50 U	0.50 U	0.50 U
	Toluene	50,000	40,000	1.0 U	NA	NA	1.0 U	1.0 U	1.0 U	1.0 U	NA	1.0 U	1.0 U	1.0 U	1.0 U	1.0 U	1.0 U	1.0 U	1.0 U	1.0 U	1.0 U	1.0 U	1.0 U	1.0 U	1.0 U	1.0 U	1.0 U	1.0 U	1.0 U	1.0 U
	Ethylbenzene	20,000	5,000	1.0 U	NA	NA	1.0 U	1.0 U	1.0 U	1.0 U	NA	1.0 U	1.0 U	1.0 U	1.0 U	1.0 U	1.0 U	1.0 U	1.0 U	1.0 U	1.0 U	1.0 U	1.0 U	1.0 U	1.0 U	1.0 U	1.0 U	1.0 U	1.0 U	1.0 U
	Chloromethane	NS	NS	2.0 U	NA	NA	2.0 U	2.0 U	2.0 U	2.0 U	NA	2.0 U	2.0 U	2.0 U	2.0 U	2.0 U	2.0 U	2.0 U	2.0 U	2.0 U	2.0 U	2.0 U	2.0 U	2.0 U	2.0 U	2.0 U	2.0 U	2.0 U	2.0 U	2.0 U
	Bromomethane	7	800	2.0 U	NA	NA	2.0 U	5.0 U	5.0 U	2.0 U	NA	2.0 U	2.0 U	5.0 U	5.0 U	2.0 U	2.0 U	2.0 U	2.0 U	2.0 U	2.0 U	2.0 U	2.0 U	2.0 U	2.0 U	2.0 U	2.0 U	2.0 U	2.0 U	2.0 U
	Vinyl Chloride	2	50,000	1.0 U	NA	NA	2.0 U	1.0 U	1.0 U	1.0 U	NA	2.0 U	2.0 U	1.0 U	1.0 U	1.0 U	1.0 U	1.0 U	1.0 U	1.0 U	1.0 U	1.0 U	1.0 U	1.0 U	1.0 U	1.0 U	1.0 U	1.0 U	1.0 U	1.0 U
	Chloroethane	NS	NS	2.0 U	NA	NA	2.0 U	2.0 U	2.0 U	2.0 U	NA	2.0 U	2.0 U	2.0 U	2.0 U	2.0 U	2.0 U	2.0 U	2.0 U	2.0 U	2.0 U	2.0 U	2.0 U	2.0 U	2.0 U	2.0 U	2.0 U	2.0 U	2.0 U	2.0 U
	1,1-Dichloroethylene	80	30,000	1.0 U	NA	NA	1.0 U	1.0 U	1.0 U	1.0 U	NA	1.0 U	1.0 U	1.0 U	1.0 U	1.0 U	1.0 U	1.0 U	1.0 U	1.0 U	1.0 U	1.0 U	1.0 U	1.0 U	1.0 U	1.0 U	1.0 U	1.0 U	1.0 U	1.0 U
	trans-1,2-Dichloroethylene	80	50,000	1.0 U	NA	NA	1.0 U	1.0 U	1.0 U	1.0 U	NA	1.0 U	1.0 U	1.0 U	1.0 U	1.0 U	1.0 U	1.0 U	1.0 U	1.0 U	1.0 U	1.0 U	1.0 U	1.0 U	1.0 U	1.0 U	1.0 U	1.0 U	1.0 U	1.0 U
	Trichloroethylene	5	5,000	1.0 U	NA	NA	1.0 U	1.0 U	1.0 U	1.0 U	NA	1.0 U	1.0 U	1.0 U	1.0 U	1.0 U	1.0 U	**2.8**	**2.1**	**4.4**	1.0 U	**5.3**	**2.9**	**1.8**	**1.1**	**3.4**	**3.5**	**31**	**7.5**	**5.9**	**1.1**
	1,2-Dichlorobenzene	8,000	2,000	1.0 U	NA	NA	1.0 U	1.0 U	1.0 U	1.0 U	NA	1.0 U	1.0 U	1.0 U	1.0 U	1.0 U	1.0 U	1.0 U	1.0 U	1.0 U	1.0 U	1.0 U	1.0 U	1.0 U	1.0 U	1.0 U	1.0 U	1.0 U	1.0 U	1.0 U	1.0 U
	1,3-Dichlorobenzene	6,000	50,000	1.0 U	NA	NA	1.0 U	1.0 U	1.0 U	1.0 U	NA	1.0 U	1.0 U	1.0 U	1.0 U	1.0 U	1.0 U	1.0 U	1.0 U	1.0 U	1.0 U	1.0 U	1.0 U	1.0 U	1.0 U	1.0 U	1.0 U	1.0 U	1.0 U	1.0 U	1.0 U
	1,4-Dichlorobenzene	60	8,000	1.0 U	NA	NA	1.0 U	1.0 U	1.0 U	1.0 U	NA	1.0 U	1.0 U	1.0 U	1.0 U	1.0 U	1.0 U	1.0 U	1.0 U	1.0 U	1.0 U	1.0 U	1.0 U	1.0 U	1.0 U	1.0 U	1.0 U	1.0 U	1.0 U	1.0 U	1.0 U
	Methyl tert-Butyl Ether (MTBE)	50,000	50,000	2.0 U	NA	NA	1.0 U	2.0 U	2.0 U	2.0 U	NA	1.0 U	1.0 U	2.0 U	2.0 U	2.0 U	2.0 U	2.0 U	2.0 U	2.0 U	2.0 U	2.0 U	2.0 U	2.0 U	2.0 U	2.0 U	2.0 U	2.0 U	2.0 U	2.0 U	2.0 U
	m+p Xylene	3,000[3]	5,000[3]	2.0 U	NA	NA	2.0 U	2.0 U	2.0 U	2.0 U	NA	2.0 U	2.0 U	2.0 U	2.0 U	2.0 U	2.0 U	2.0 U	2.0 U	2.0 U	2.0 U	2.0 U	2.0 U	2.0 U	2.0 U	2.0 U	2.0 U	2.0 U	2.0 U	2.0 U	2.0 U
	o-Xylene	3,000[3]	5,000[3]	1.0 U	NA	NA	1.0 U	1.0 U	1.0 U	1.0 U	NA	1.0 U	1.0 U	1.0 U	1.0 U	1.0 U	1.0 U	1.0 U	1.0 U	1.0 U	1.0 U	1.0 U	1.0 U	1.0 U	1.0 U	1.0 U	1.0 U	1.0 U	1.0 U	1.0 U	1.0 U
	Xylene (Total)	3,000	5,000	2.0 U	NA	NA	2.0 U	2.0 U	2.0 U	2.0 U	NA	2.0 U	2.0 U	2.0 U	2.0 U	2.0 U	2.0 U	2.0 U	2.0 U	2.0 U	2.0 U	2.0 U	2.0 U	2.0 U	2.0 U	2.0 U	2.0 U	2.0 U	2.0 U	2.0 U	2.0 U
	cis-1,2-Dichloroethylene	20	50,000	1.0 U	NA	NA	1.0 U	1.0 U	1.0 U	1.0 U	NA	**3.7**	**4.1**	**5.9**	**3.2**	**7.1**	**3.8**	**4.0**	**5.1**	**3.1**	**8.3**	**4.0**	**9.7**	1.0 U	1.0 U	1.0 U	**6.3**	**7.4**	**5.7**	**1.3**
	1,2-Dichloroethene (total)	NS	NS	NA	NA	NA	NA	NA	NA	NA	NA	NA	NA	NA	NA	NA	NA	NA	NA	NA	NA	NA	NA	NA	NA	NA	NA	NA	NA	NA
	Dibromomethane	NS	NS	2.0 U	NA	NA	1.0 U	2.0 U	2.0 U	2.0 U	NA	1.0 U	1.0 U	2.0 U	2.0 U	2.0 U	2.0 U	2.0 U	2.0 U	2.0 U	2.0 U	2.0 U	2.0 U	2.0 U	2.0 U	2.0 U	2.0 U	2.0 U	2.0 U	2.0 U	2.0 U
	1,2,3-Trichloropropane	NS	NS	2.0 U	NA	NA	2.0 U	2.0 U	2.0 U	2.0 U	NA	2.0 U	2.0 U	2.0 U	2.0 U	2.0 U	2.0 U	2.0 U	2.0 U	2.0 U	2.0 U	2.0 U	2.0 U	2.0 U	2.0 U	2.0 U	2.0 U	2.0 U	2.0 U	2.0 U	2.0 U
	Styrene	100	6,000	1.0 U	NA	NA	1.0 U	1.0 U	1.0 U	1.0 U	NA	1.0 U	1.0 U	1.0 U	1.0 U	1.0 U	1.0 U	1.0 U	1.0 U	1.0 U	1.0 U	1.0 U	1.0 U	1.0 U	1.0 U	1.0 U	1.0 U	1.0 U	1.0 U	1.0 U	1.0 U
	Dichlorodifluoromethane (Freon 12)	NS	NS	2.0 U	NA	NA	2.0 U	2.0 U	2.0 U	2.0 U	NA	2.0 U	2.0 U	2.0 U	2.0 U	2.0 U	2.0 U	2.0 U	2.0 U	2.0 U	2.0 U	2.0 U	2.0 U	2.0 U	2.0 U	2.0 U	2.0 U	2.0 U	2.0 U	2.0 U	2.0 U
	Acetone	50,000	50,000	5.0 U	NA	NA	50 U	5.0 U	5.0 U	5.0 U	NA	50 U	50 U	5.0 U	5.0 U	5.0 U	5.0 U	5.0 U	5.0 U	5.0 U	5.0 U	5.0 U	5.0 U	5.0 U	5.0 U	5.0 U	5.0 U	5.0 U	5.0 U	5.0 U	5.0 U
	Carbon Disulfide	NS	NS	2.0 U	NA	NA	5.0 U	2.0 U	2.0 U	2.0 U	NA	5.0 U	5.0 U	2.0 U	2.0 U	2.0 U	2.0 U	2.0 U	2.0 U	2.0 U	2.0 U	2.0 U	2.0 U	2.0 U	2.0 U	2.0 U	2.0 U	2.0 U	2.0 U	2.0 U	2.0 U
	2-Butanone (MEK)	50,000	50,000	5.0 U	NA	NA	20 U	5.0 U	5.0 U	5.0 U	NA	20 U	20 U	5.0 U	5.0 U	5.0 U	5.0 U	5.0 U	5.0 U	5.0 U	5.0 U	5.0 U	5.0 U	5.0 U	5.0 U	5.0 U	5.0 U	5.0 U	5.0 U	5.0 U	5.0 U
	4-Methyl-2-pentanone (MIBK)	50,000	50,000	5.0 U	NA	NA	10 U	5.0 U	5.0 U	5.0 U	NA	10 U	10 U	5.0 U	5.0 U	5.0 U	5.0 U	5.0 U	5.0 U	5.0 U	5.0 U	5.0 U	5.0 U	5.0 U	5.0 U	5.0 U	5.0 U	5.0 U	5.0 U	5.0 U	5.0 U
	2-Hexanone (MBK)	NS	NS	5.0 U	NA	NA	10 U	5.0 U	5.0 U	5.0 U	NA	10 U	10 U	5.0 U	5.0 U	5.0 U	5.0 U	5.0 U	5.0 U	5.0 U	5.0 U	5.0 U	5.0 U	5.0 U	5.0 U	5.0 U	5.0 U	5.0 U	5.0 U	5.0 U	5.0 U
	Bromochloromethane	NS	NS	2.0 U	NA	NA	1.0 U	2.0 U	2.0 U	2.0 U	NA	1.0 U	1.0 U	2.0 U	2.0 U	2.0 U	2.0 U	2.0 U	2.0 U	2.0 U	2.0 U	2.0 U	2.0 U	2.0 U	2.0 U	2.0 U	2.0 U	2.0 U	2.0 U	2.0 U	2.0 U
	Tetrahydrofuran	NS	NS	5.0 U	NA	NA	10 U	10 U	10 U	10 U	NA	10 U	10 U	10 U	10 U	10 U	5.0 U	5.0 U	5.0 U	5.0 U	5.0 U	5.0 U	5.0 U	10 U	5.0 U	5.0 U	5.0 U	5.0 U	5.0 U	5.0 U	5.0 U
	2,2-Dichloropropane	NS	NS	2.0 U	NA	NA	1.0 U	2.0 U	2.0 U	2.0 U	NA	1.0 U	1.0 U	2.0 U	2.0 U	2.0 U	2.0 U	2.0 U	2.0 U	2.0 U	2.0 U	2.0 U	2.0 U	2.0 U	2.0 U	2.0 U	2.0 U	2.0 U	2.0 U	2.0 U	2.0 U
	1,2-Dibromoethane (EDB)	2	50,000	2.0 U	NA	NA	0.50 U	2.0 U	2.0 U	2.0 U	NA	0.50 U	0.50 U	2.0 U	2.0 U	2.0 U	2.0 U	2.0 U	2.0 U	2.0 U	2.0 U	2.0 U	2.0 U	2.0 U	2.0 U	2.0 U	2.0 U	2.0 U	2.0 U	2.0 U	2.0 U
	1,3-Dichloropropane	NS	NS	2.0 U	NA	NA	0.50 U	2.0 U	2.0 U	2.0 U	NA	0.50 U	0.50 U	2.0 U	2.0 U	2.0 U	2.0 U	2.0 U	2.0 U	2.0 U	2.0 U	2.0 U	2.0 U	2.0 U	2.0 U	2.0 U	2.0 U	2.0 U	2.0 U	2.0 U	2.0 U
	1,1,1,2-Tetrachloroethane	10	50,000	1.0 U	NA	NA	5.0 U	1.0 U	1.0 U	1.0 U	NA	5.0 U	5.0 U	1.0 U	1.0 U	1.0 U	1.0 U	1.0 U	1.0 U	1.0 U	1.0 U	1.0 U	1.0 U	1.0 U	1.0 U	1.0 U	1.0 U	1.0 U	1.0 U	1.0 U	1.0 U
	Bromobenzene	NS	NS	2.0 U	NA	NA	1.0 U	2.0 U	2.0 U	2.0 U	NA	1.0 U	1.0 U	2.0 U	2.0 U	2.0 U	2.0 U	2.0 U	2.0 U	2.0 U	2.0 U	2.0 U	2.0 U	2.0 U	2.0 U	2.0 U	2.0 U	2.0 U	2.0 U	2.0 U	2.0 U
	n-Butylbenzene	4,000[1]	50,000[1]	2.0 U	NA	NA	1.0 U	2.0 U	2.0 U	2.0 U	NA	1.0 U	1.0 U	2.0 U	2.0 U	2.0 U	2.0 U	2.0 U	2.0 U	2.0 U	2.0 U	2.0 U	2.0 U	2.0 U	2.0 U	2.0 U	2.0 U	2.0 U	2.0 U	2.0 U	2.0 U
	sec-Butylbenzene	4,000[1]	50,000[1]	2.0 U	NA	NA	1.0 U	2.0 U	2.0 U	2.0 U	NA	1.0 U	1.0 U	2.0 U	2.0 U	2.0 U	2.0 U	2.0 U	2.0 U	2.0 U	2.0 U	2.0 U	2.0 U	2.0 U	2.0 U	2.0 U	2.0 U	2.0 U	2.0 U	2.0 U	2.0 U
	tert-Butylbenzene	4,000[1]	50,000[1]	2.0 U	NA	NA	1.0 U	2.0 U	2.0 U	2.0 U	NA	1.0 U	1.0 U	2.0 U	2.0 U	2.0 U	2.0 U	2.0 U	2.0 U	2.0 U	2.0 U	2.0 U	2.0 U	2.0 U	2.0 U	2.0 U	2.0 U	2.0 U	2.0 U	2.0 U	2.0 U
	2-Chlorotoluene	NS	NS	2.0 U	NA	NA	1.0 U	2.0 U	2.0 U	2.0 U	NA	1.0 U	1.0 U	2.0 U	2.0 U	2.0 U	2.0 U	2.0 U	2.0 U	2.0 U	2.0 U	2.0 U	2.0 U	2.0 U	2.0 U	2.0 U	2.0 U	2.0 U	2.0 U	2.0 U	2.0 U
	4-Chlorotoluene	NS	NS	2.0 U	NA	NA	1.0 U	2.0 U	2.0 U	2.0 U	NA	1.0 U	1.0 U	2.0 U	2.0 U	2.0 U	2.0 U	2.0 U	2.0 U	2.0 U	2.0 U	2.0 U	2.0 U	2.0 U	2.0 U	2.0 U	2.0 U	2.0 U	2.0 U	2.0 U	2.0 U
	1,2-Dibromo-3-chloropropane (DBCP)	NS	NS	2.0 U	NA	NA	10 U	5.0 U	5.0 U	2.0 U	NA	10 U	10 U	5.0 U	5.0 U	2.0 U	2.0 U	2.0 U	2.0 U	2.0 U	2.0 U	2.0 U	2.0 U	2.0 U	2.0 U	2.0 U	2.0 U	2.0 U	2.0 U	2.0 U	2.0 U
	Hexachlorobutadiene	50	3,000	0.60 U	NA	NA	1.0 U	0.60 U	0.60 U	0.60 U	NA	1.0 U	1.0 U	0.60 U	0.60 U	0.60 U	0.60 U	0.60 U	0.60 U	0.60 U	0.60 U	0.60 U	0.60 U	0.60 U	0.60 U	0.60 U	0.60 U	0.60 U	0.60 U	0.60 U	0.60 U
	Isopropylbenzene (Cumene)	4,000[1]	50,000[1]	2.0 U	NA	NA	1.0 U	2.0 U	2.0 U	2.0 U	NA	1.0 U	1.0 U	2.0 U	2.0 U	2.0 U	2.0 U	2.0 U	2.0 U	2.0 U	2.0 U	2.0 U	2.0 U	2.0 U	2.0 U	2.0 U	2.0 U	2.0 U	2.0 U	2.0 U	2.0 U
	p-Isopropyltoluene (p-Cymene)	4,000[1]	50,000[1]	2.0 U	NA	NA	1.0 U	2.0 U	2.0 U	2.0 U	NA	1.0 U	1.0 U	2.0 U	2.0 U	2.0 U	2.0 U	2.0 U	2.0 U	2.0 U	2.0 U	2.0 U	2.0 U	2.0 U	2.0 U	2.0 U	2.0 U	2.0 U	2.0 U	2.0 U	2.0 U
	Naphthalene	700	20,000	2.0 U	NA	NA	2.0 U	5.0 U	5.0 U	2.0 U	NA	2.0 U	2.0 U	5.0 U	5.0 U	5.0 U	2.0 U	2.0 U	2.0 U	2.0 U	2.0 U	2.0 U	2.0 U	5.0 U	2.0 U	2.0 U	2.0 U	2.0 U	2.0 U	2.0 U	2.0 U
	n-Propylbenzene	4,000[1]	50,000[1]	2.0 U	NA	NA	1.0 U	2.0 U	2.0 U	2.0 U	NA	1.0 U	1.0 U	2.0 U	2.0 U	2.0 U	2.0 U	2.0 U	2.0 U	2.0 U	2.0 U	2.0 U	2.0 U	2.0 U	2.0 U	2.0 U	2.0 U	2.0 U	2.0 U	2.0 U	2.0 U
	1,2,3-Trichlorobenzene	NS	NS	2.0 U	NA	NA	5.0 U	2.0 U	2.0 U	2.0 U	NA	5.0 U	5.0 U	2.0 U	2.0 U	2.0 U	2.0 U	2.0 U	2.0 U	2.0 U	2.0 U	2.0 U	2.0 U	2.0 U	2.0 U	2.0 U	2.0 U	2.0 U	2.0 U	2.0 U	2.0 U
	1,2,4-Trichlorobenzene	200	50,000	2.0 U	NA	NA	1.0 U	2.0 U	2.0 U	2.0 U	NA	1.0 U	1.0 U	2.0 U	2.0 U	2.0 U	2.0 U	2.0 U	2.0 U	2.0 U	2.0 U	2.0 U	2.0 U	2.0 U	2.0 U	2.0 U	2.0 U	2.0 U	2.0 U	2.0 U	2.0 U
	1,3,5-Trimethylbenzene	4,000[1]	50,000[1]	2.0 U	NA	NA	1.0 U	2.0 U	2.0 U	2.0 U	NA	1.0 U	1.0 U	2.0 U	2.0 U	2.0 U	2.0 U	2.0 U	2.0 U	2.0 U	2.0 U	2.0 U	2.0 U	2.0 U	2.0 U	2.0 U	2.0 U	2.0 U	2.0 U	2.0 U	2.0 U
	1,2,4-Trimethylbenzene	4,000[1]	50,000[1]	2.0 U	NA	NA	1.0 U	2.0 U	2.0 U	2.0 U	NA	1.0 U	1.0 U	2.0 U	2.0 U	2.0 U	2.0 U	2.0 U	2.0 U	2.0 U	2.0 U	2.0 U	2.0 U	2.0 U	2.0 U	2.0 U	2.0 U	2.0 U	2.0 U	2.0 U	2.0 U
	Diisopropyl Ether (DIPE)	NS	NS	2.0 U	NA	NA	0.50 U	2.0 U	2.0 U	2.0 U	NA	0.50 U	0.50 U	2.0 U	2.0 U	2.0 U	2.0 U	2.0 U	2.0 U	2.0 U	2.0 U	2.0 U	2.0 U	2.0 U	2.0 U	2.0 U	2.0 U	2.0 U	2.0 U	2.0 U	2.0 U
	tert-Butyl Ethyl Ether (TBEE)	NS	NS	2.0 U	NA	NA	0.50 U	2.0 U	2.0 U	2.0 U	NA	0.50 U	0.50 U	2.0 U	2.0 U	2.0 U	2.0 U	2.0 U	2.0 U	2.0 U	2.0 U	2.0 U	2.0 U	2.0 U	2.0 U	2.0 U	2.0 U	2.0 U	2.0 U	2.0 U	2.0 U
	tert-Amyl Methyl Ether (TAME)	NS	NS	2.0 U	NA	NA	0.50 U	2.0 U	2.0 U	2.0 U	NA	0.50 U	0.50 U	2.0 U	2.0 U	2.0 U	2.0 U	2.0 U	2.0 U	2.0 U	2.0 U	2.0 U	2.0 U	2.0 U	2.0 U	2.0 U	2.0 U	2.0 U	2.0 U	2.0 U	2.0 U
	1,4-Dioxane	6,000	50,000	250 U	NA	NA	50 U	250 U	250 U	250 U	NA	50 U	50 U	250 U	250 U	250 U	250 U	250 U	250 U	250 U	250 U	250 U	250 U	250 U	250 U	250 U	250 U	250 U	250 U	250 U	250 U
	Diethyl Ether	NS	NS	2.0 U	NA	NA	2.0 U	2.0 U	2.0 U	2.0 U	NA	2.0 U	2.0 U	2.0 U	2.0 U	2.0 U	2.0 U	2.0 U	2.0 U	2.0 U	2.0 U	2.0 U	2.0 U	2.0 U	2.0 U	2.0 U	2.0 U	2.0 U	2.0 U	2.0 U	2.0 U

Table 2
Summary of Analytical Results for Groundwater Samples --
2008 through 2015
New Bedford High School
New Bedford, Massachusetts

Analysis	Analyte		Sample ID:	**CLEAN OUT**	**MW-4**						**MW-5**													**MW-5D**						
		Filter Size (micron)^:		N/A	N/A	N/A	N/A	N/A	N/A	N/A	N/A	N/A	N/A	N/A	N/A	N/A	N/A	N/A	N/A	N/A	N/A	N/A	N/A	N/A	N/A	N/A	N/A	N/A	N/A	N/A
		Sample Date:		4/28/2011	8/19/2008	8/19/2008	1/6/2010	2/17/2010	4/9/2010	9/13/2010	8/19/2008	1/6/2010	1/6/2010	2/17/2010	4/8/2010	9/10/2010	3/8/2011	4/11/2011	4/29/2011	8/24/2011	2/27/2012	4/10/2012	12/14/2012	9/10/2010	4/8/2011	4/28/2011	8/24/2011	2/27/2012	4/10/2012	12/14/2012
		GW-2	GW-3			Field Dup							Field Dup																	
PAHs																														
(ug/L)	Acenaphthene	NS	10,000	NA	0.30 U	0.30 U	NA	NA	NA	NA	0.30 U	NA	NA	NA	NA	NA	NA	NA	NA	NA	NA	NA	NA	NA	NA	NA	NA	NA	NA	NA
	Acenaphthylene	10,000	40	NA	0.30 U	0.30 U	NA	NA	NA	NA	0.30 U	NA	NA	NA	NA	NA	NA	NA	NA	NA	NA	NA	NA	NA	NA	NA	NA	NA	NA	NA
	Anthracene	NS	30	NA	0.20 U	0.20 U	NA	NA	NA	NA	0.20 U	NA	NA	NA	NA	NA	NA	NA	NA	NA	NA	NA	NA	NA	NA	NA	NA	NA	NA	NA
	Benzo(a)anthracene	NS	1,000	NA	0.05 U	0.05 U	NA	NA	NA	NA	0.05 U	NA	NA	NA	NA	NA	NA	NA	NA	NA	NA	NA	NA	NA	NA	NA	NA	NA	NA	NA
	Benzo(a)pyrene	NS	500	NA	0.10 U	0.10 U	NA	NA	NA	NA	0.10 U	NA	NA	NA	NA	NA	NA	NA	NA	NA	NA	NA	NA	NA	NA	NA	NA	NA	NA	NA
	Benzo(b)fluoranthene	NS	400	NA	0.05 U	0.05 U	NA	NA	NA	NA	0.05 U	NA	NA	NA	NA	NA	NA	NA	NA	NA	NA	NA	NA	NA	NA	NA	NA	NA	NA	NA
	Benzo(g,h,i)perylene	NS	20	NA	0.50 U	0.50 U	NA	NA	NA	NA	0.50 U	NA	NA	NA	NA	NA	NA	NA	NA	NA	NA	NA	NA	NA	NA	NA	NA	NA	NA	NA
	Benzo(k)fluoranthene	NS	100	NA	0.20 U	0.20 U	NA	NA	NA	NA	0.20 U	NA	NA	NA	NA	NA	NA	NA	NA	NA	NA	NA	NA	NA	NA	NA	NA	NA	NA	NA
	Chrysene	NS	70	NA	0.20 U	0.20 U	NA	NA	NA	NA	0.20 U	NA	NA	NA	NA	NA	NA	NA	NA	NA	NA	NA	NA	NA	NA	NA	NA	NA	NA	NA
	Dibenz(a,h)anthracene	NS	40	NA	0.50 U	0.50 U	NA	NA	NA	NA	0.50 U	NA	NA	NA	NA	NA	NA	NA	NA	NA	NA	NA	NA	NA	NA	NA	NA	NA	NA	NA
	Fluoranthene	NS	200	NA	0.50 U	0.50 U	NA	NA	NA	NA	0.50 U	NA	NA	NA	NA	NA	NA	NA	NA	NA	NA	NA	NA	NA	NA	NA	NA	NA	NA	NA
	Fluorene	NS	40	NA	1.0 U	1.0 U	NA	NA	NA	NA	1.0 U	NA	NA	NA	NA	NA	NA	NA	NA	NA	NA	NA	NA	NA	NA	NA	NA	NA	NA	NA
	Indeno(1,2,3-cd)pyrene	NS	100	NA	0.50 U	0.50 U	NA	NA	NA	NA	0.50 U	NA	NA	NA	NA	NA	NA	NA	NA	NA	NA	NA	NA	NA	NA	NA	NA	NA	NA	NA
	2-Methylnaphthalene	2,000	20,000	NA	1.0 U	1.0 U	NA	NA	NA	NA	1.0 U	NA	NA	NA	NA	NA	NA	NA	NA	NA	NA	NA	NA	NA	NA	NA	NA	NA	NA	NA
	Naphthalene	700	20,000	NA	1.0 U	1.0 U	NA	NA	NA	NA	1.0 U	NA	NA	NA	NA	NA	NA	NA	NA	NA	NA	NA	NA	NA	NA	NA	NA	NA	NA	NA
	Phenanthrene	NS	10,000	NA	0.05 U	0.05 U	NA	NA	NA	NA	**0.18**	NA	NA	NA	NA	NA	NA	NA	NA	NA	NA	NA	NA	NA	NA	NA	NA	NA	NA	NA
	Pyrene	NS	20	NA	1.0 U	1.0 U	NA	NA	NA	NA	1.0 U	NA	NA	NA	NA	NA	NA	NA	NA	NA	NA	NA	NA	NA	NA	NA	NA	NA	NA	NA
PCBs																														
(ug/L)	Aroclor 1016	NS	NS	NA	0.0500 U	0.0500 U	NA	NA	NA	NA	0.0500 U	NA	NA	NA	NA	NA	NA	NA	NA	0.0521 U	0.050 U	0.0500 U	0.25 U	NA	NA	NA	0.0500 U	0.050 U	0.0500 U	0.25 U
	Aroclor 1221	NS	NS	NA	0.0500 U	0.0500 U	NA	NA	NA	NA	0.0500 U	NA	NA	NA	NA	NA	NA	NA	NA	0.0521 U	0.050 U	**0.0202 J**	0.25 U	NA	NA	NA	0.0500 U	0.050 U	0.0500 U	0.25 U
	Aroclor 1232	NS	NS	NA	0.0500 U	0.0500 U	NA	NA	NA	NA	0.0500 U	NA	NA	NA	NA	NA	NA	NA	NA	0.0521 U	0.050 U	0.0500 U	0.25 U	NA	NA	NA	0.0500 U	0.050 U	0.0500 U	0.25 U
	Aroclor 1242	NS	NS	NA	0.0500 U	0.0500 U	NA	NA	NA	NA	0.0500 U	NA	NA	NA	NA	NA	NA	NA	NA	0.0521 U	0.050 U	0.0500 U	0.25 U	NA	NA	NA	0.0500 U	0.050 U	0.0500 U	0.25 U
	Aroclor 1248	NS	NS	NA	0.0500 U	0.0500 U	NA	NA	NA	NA	0.0500 U	NA	NA	NA	NA	NA	NA	NA	NA	**0.129**	**0.0595**	**0.0727 J**	0.25 U	NA	NA	NA	0.0500 U	0.050 U	0.0500 U	0.25 U
	Aroclor 1254	NS	NS	NA	0.0500 U	0.0500 U	NA	NA	NA	NA	**0.0731 J**	NA	NA	NA	NA	NA	NA	NA	NA	0.0521 U	**0.0319 J**	**0.0373 J**	0.25 U	NA	NA	NA	0.0500 U	**0.0283 J**	0.0500 U	0.25 U
	Aroclor 1260	NS	NS	NA	0.0500 U	0.0500 U	NA	NA	NA	NA	0.0500 U	NA	NA	NA	NA	NA	NA	NA	NA	0.0521 U	0.050 U	0.0500 U	0.25 U	NA	NA	NA	0.0500 U	0.050 U	0.0500 U	0.25 U
	Aroclor 1262	NS	NS	NA	NA	NA	NA	NA	NA	NA	NA	NA	NA	NA	NA	NA	NA	NA	NA	NA	NA	NA	0.25 U	NA	NA	NA	NA	NA	NA	0.25 U
	Aroclor 1268	NS	NS	NA	NA	NA	NA	NA	NA	NA	NA	NA	NA	NA	NA	NA	NA	NA	NA	NA	NA	NA	0.25 U	NA	NA	NA	NA	NA	NA	0.25 U
	Total PCBs	5	10	NA	0.0500 U	0.0500 U	NA	NA	NA	NA	**0.0731 J**	NA	NA	NA	NA	NA	NA	NA	NA	**0.129**	**0.0914 J**	**0.1302 J**	0.25 U	NA	NA	NA	0.0500 U	**0.0283 J**	0.0500 U	0.25 U
Total Petroleum Hydrocarbons																														
(ug/L)	Total Petroleum Hydrocarbons (C9-C44)	5,000	5,000	NA	NA	NA	NA	NA	NA	NA	NA	NA	NA	NA	NA	NA	NA	NA	NA	NA	NA	NA	NA	NA	NA	NA	NA	NA	NA	NA
Metals, total																														
(ug/L)	Antimony	NS	8,000	NA	3.0 U	3.0 U	NA	NA	NA	NA	3.0 U	NA	NA	NA	NA	NA	NA	NA	NA	NA	NA	NA	NA	NA	NA	NA	NA	NA	NA	NA
	Arsenic	NS	900	NA	**7.0**	5.0 U	NA	NA	NA	NA	**15.0**	NA	NA	NA	NA	NA	NA	NA	NA	NA	NA	NA	NA	NA	NA	NA	NA	NA	NA	NA
	Barium	NS	50,000	NA	50 U	50 U	NA	NA	NA	NA	**122**	NA	NA	NA	NA	NA	NA	NA	NA	NA	NA	NA	NA	NA	NA	NA	NA	NA	NA	NA
	Beryllium	NS	200	NA	2.0 U	2.0 U	NA	NA	NA	NA	2.0 U	NA	NA	NA	NA	NA	NA	NA	NA	NA	NA	NA	NA	NA	NA	NA	NA	NA	NA	NA
	Cadmium	NS	4	NA	2.5 U	2.5 U	NA	NA	NA	NA	2.5 U	NA	NA	NA	NA	NA	NA	NA	NA	NA	NA	NA	NA	NA	NA	NA	NA	NA	NA	NA
	Chromium	NS	300	NA	5.0 U	5.0 U	NA	NA	NA	NA	**52.0**	NA	NA	NA	NA	NA	NA	NA	NA	NA	NA	NA	NA	NA	NA	NA	NA	NA	NA	NA
	Lead	NS	10	NA	7.5 U	7.5 U	NA	NA	NA	NA	**19.2**	NA	NA	NA	NA	NA	NA	NA	NA	NA	NA	NA	NA	NA	NA	NA	NA	NA	NA	NA
	Mercury	NS	20	NA	0.10 U	0.10 U	NA	NA	NA	NA	0.10 U	NA	NA	NA	NA	NA	NA	NA	NA	NA	NA	NA	NA	NA	NA	NA	NA	NA	NA	NA
	Nickel	NS	200	NA	5.0 U	5.0 U	NA	NA	NA	NA	**20.0**	NA	NA	NA	NA	NA	NA	NA	NA	NA	NA	NA	NA	NA	NA	NA	NA	NA	NA	NA
	Selenium	NS	100	NA	30 U	30 U	NA	NA	NA	NA	30 U	NA	NA	NA	NA	NA	NA	NA	NA	NA	NA	NA	NA	NA	NA	NA	NA	NA	NA	NA
	Silver	NS	7	NA	3.0 U	3.0 U	NA	NA	NA	NA	**5.0**	NA	NA	NA	NA	NA	NA	NA	NA	NA	NA	NA	NA	NA	NA	NA	NA	NA	NA	NA
	Thallium	NS	3,000	NA	1.0 U	1.0 U	NA	NA	NA	NA	1.0 U	NA	NA	NA	NA	NA	NA	NA	NA	NA	NA	NA	NA	NA	NA	NA	NA	NA	NA	NA
	Vanadium	NS	4,000	NA	25 U	25 U	NA	NA	NA	NA	25 U	NA	NA	NA	NA	NA	NA	NA	NA	NA	NA	NA	NA	NA	NA	NA	NA	NA	NA	NA
	Zinc	NS	900	NA	**12.0**	**16.0**	NA	NA	NA	NA	**68.0**	NA	NA	NA	NA	NA	NA	NA	NA	NA	NA	NA	NA	NA	NA	NA	NA	NA	NA	NA
Metals, dissolved																														
(ug/L)	Antimony	NS	8,000	NA	3.0 U	3.0 U	NA	NA	NA	NA	3.0 U	NA	NA	NA	NA	NA	NA	NA	NA	NA	NA	NA	NA	NA	NA	NA	NA	NA	NA	NA
	Arsenic	NS	900	NA	10 U	10 U	NA	NA	NA	NA	**10**	NA	NA	NA	NA	NA	NA	NA	NA	NA	NA	NA	NA	NA	NA	NA	NA	NA	NA	NA
	Barium	NS	50,000	NA	50 U	50 U	NA	NA	NA	NA	**64.9**	NA	NA	NA	NA	NA	NA	NA	NA	NA	NA	NA	NA	NA	NA	NA	NA	NA	NA	NA
	Beryllium	NS	200	NA	2.0 U	2.0 U	NA	NA	NA	NA	2.0 U	NA	NA	NA	NA	NA	NA	NA	NA	NA	NA	NA	NA	NA	NA	NA	NA	NA	NA	NA
	Cadmium	NS	4	NA	2.5 U	2.5 U	NA	NA	NA	NA	2.5 U	NA	NA	NA	NA	NA	NA	NA	NA	NA	NA	NA	NA	NA	NA	NA	NA	NA	NA	NA
	Chromium	NS	300	NA	5.0 U	5.0 U	NA	NA	NA	NA	5.0 U	NA	NA	NA	NA	NA	NA	NA	NA	NA	NA	NA	NA	NA	NA	NA	NA	NA	NA	NA
	Lead	NS	10	NA	8.0 U	8.0 U	NA	NA	NA	NA	8.0 U	NA	NA	NA	NA	NA	NA	NA	NA	NA	NA	NA	NA	NA	NA	NA	NA	NA	NA	NA
	Mercury	NS	20	NA	0.10 U	0.10 U	NA	NA	NA	NA	0.10 U	NA	NA	NA	NA	NA	NA	NA	NA	NA	NA	NA	NA	NA	NA	NA	NA	NA	NA	NA
	Nickel	NS	200	NA	5.0 U	5.0 U	NA	NA	NA	NA	5.0 U	NA	NA	NA	NA	NA	NA	NA	NA	NA	NA	NA	NA	NA	NA	NA	NA	NA	NA	NA
	Selenium	NS	100	NA	30 U	30 U	NA	NA	NA	NA	30 U	NA	NA	NA	NA	NA	NA	NA	NA	NA	NA	NA	NA	NA	NA	NA	NA	NA	NA	NA
	Silver	NS	7	NA	2.5 U	2.5 U	NA	NA	NA	NA	2.5 U	NA	NA	NA	NA	NA	NA	NA	NA	NA	NA	NA	NA	NA	NA	NA	NA	NA	NA	NA
	Thallium	NS	3,000	NA	1.0 U	1.0 U	NA	NA	NA	NA	1.0 U	NA	NA	NA	NA	NA	NA	NA	NA	NA	NA	NA	NA	NA	NA	NA	NA	NA	NA	NA
	Vanadium	NS	4,000	NA	50 U	50 U	NA	NA	NA	NA	50 U	NA	NA	NA	NA	NA	NA	NA	NA	NA	NA	NA	NA	NA	NA	NA	NA	NA	NA	NA
	Zinc	NS	900	NA	**11**	**119**	NA	NA	NA	NA	**10**	NA	NA	NA	NA	NA	NA	NA	NA	NA	NA	NA	NA	NA	NA	NA	NA	NA	NA	NA
General Chemistry																														
(ug/L)	Nitrogen, Nitrate	NS	NS	NA	NA	NA	NA	NA	NA	NA	NA	NA	NA	NA	NA	100 U	NA	NA	NA	NA	NA	NA	NA	**280**	NA	NA	NA	NA	NA	NA
	Sulfate	NS	NS	NA	NA	NA	NA	NA	NA	NA	NA	NA	NA	NA	NA	10,000 U	NA	NA	NA	NA	NA	NA	NA	**10,000**	NA	NA	NA	NA	NA	NA
	Total Organic Carbon	NS	NS	NA	NA	NA	NA	NA	NA	NA	NA	NA	NA	NA	NA	**6,800**	NA	NA	NA	NA	NA	NA	NA	**2,900**	NA	NA	NA	NA	NA	NA

Notes:
ug/L - micrograms per liter.
B - Compound detected in associated method blank
J - Estimated value.
NA - Sample not analyzed for the listed analyte.
N/A - Not applicable.
NS - No MassDEP standards exist for this compound.
U - Compound was not detected at specified quantitation limit.
Values in **Bold** indicate the compound was detected.
VOCs - Volatile Organic Compounds.
PAHs - Polynuclear Aromatic Hydrocarbons.
PCBs - Polychlorinated Biphenyls.
(1) - MassDEP Method 1 standards for C9-C10 aromatic hydrocarbons used.
(2) - MassDEP Method 1 standards for 1,3-Dichloropropene used.
(3) - criteria applicable to xylene (total), the sum of the xylene isomers.
^ - 0.45 micron filtration done in field; 0.20 and 2.0 micron filtration performed in lab.
* - Sample collected on 4/10/2012 for PCB analysis was broken and was recollected on 4/18/2012.
** - Lab filtered sample using a 2.0 micron filter and then filtered a second time using a 0.20 micron filter.

Table 2
Summary of Analytical Results for Groundwater Samples --
2008 through 2015
New Bedford High School
New Bedford, Massachusetts

Analysis	Analyte		Sample ID:	MW-6			MW-7							MW-7D		MW-8A	MW-8B	MW-11			MW-12	MW-13	MW-14	MW-15	MW-16	
		Filter Size (micron)^:		N/A	N/A	N/A	N/A	N/A	N/A	N/A	N/A	N/A	N/A	N/A	N/A	N/A	N/A	N/A	N/A	N/A	N/A	N/A	N/A	N/A	N/A	N/A
		Sample Date:		8/19/2008	1/7/2010	2/18/2010	9/16/2008	1/7/2010	2/17/2010	2/17/2010	4/7/2010	9/9/2010	10/22/2010	9/9/2010	9/9/2010	2/18/2010	9/16/2008	2/19/2010	4/7/2010	9/13/2010	2/18/2010	2/19/2010	2/19/2010	2/18/2010	2/19/2010	4/28/2011
		GW-2	GW-3							Field Dup					Field Dup											
VOCs																										
(ug/L)	Methylene Chloride	2,000	50,000	NA	5.0 U	5.0 U	NA	5.0 U	5.0 U	5.0 U	5.0 U	2.0 U	2.0 U	2.0 U	2.0 U	5.0 U	NA	5.0 U	5.0 U	2.0 U	5.0 U	5.0 U	5.0 U	5.0 U	5.0 U	2.0 U
	1,1-Dichloroethane	2,000	20,000	NA	1.0 U	1.0 U	NA	1.0 U	1.0 U	1.0 U	1.0 U	1.0 U	1.0 U	**3.9**	**2.9**	1.0 U	NA	1.0 U	1.0 U	1.0 U	1.0 U	1.0 U	1.0 U	1.0 U	1.0 U	1.0 U
	Chloroform	50	20,000	NA	2.0 U	1.0 U	NA	2.0 U	1.0 U	1.0 U	1.0 U	1.0 U	1.0 U	1.0 U	1.0 U	1.0 U	NA	1.0 U	1.0 U	1.0 U	1.0 U	1.0 U	1.0 U	1.0 U	1.0 U	1.0 U
	Carbon Tetrachloride	2	5,000	NA	1.0 U	1.0 U	NA	1.0 U	1.0 U	1.0 U	1.0 U	1.0 U	1.0 U	1.0 U	1.0 U	1.0 U	NA	1.0 U	1.0 U	1.0 U	1.0 U	1.0 U	1.0 U	1.0 U	1.0 U	1.0 U
	1,2-Dichloropropane	3	50,000	NA	1.0 U	1.0 U	NA	1.0 U	1.0 U	1.0 U	1.0 U	1.0 U	1.0 U	1.0 U	1.0 U	1.0 U	NA	1.0 U	1.0 U	1.0 U	1.0 U	1.0 U	1.0 U	1.0 U	1.0 U	1.0 U
	Chlorodibromomethane	20	50,000	NA	10 U	1.0 U	NA	10 U	1.0 U	1.0 U	1.0 U	1.0 U	1.0 U	1.0 U	1.0 U	1.0 U	NA	1.0 U	1.0 U	1.0 U	1.0 U	1.0 U	1.0 U	1.0 U	1.0 U	1.0 U
	1,1,2-Trichloroethane	900	50,000	NA	1.0 U	1.0 U	NA	1.0 U	1.0 U	1.0 U	1.0 U	1.0 U	1.0 U	1.0 U	1.0 U	1.0 U	NA	1.0 U	1.0 U	1.0 U	1.0 U	1.0 U	1.0 U	1.0 U	1.0 U	1.0 U
	Tetrachloroethylene	50	30,000	NA	1.0 U	1.0 U	NA	**63**	**60**	**64**	**64**	**25**	**26**	**1.3**	1.0 U	1.0 U	NA	1.0 U	1.0 U	1.0 U	1.0 U	1.0 U	1.0 U	1.0 U	1.0 U	1.0 U
	Chlorobenzene	200	1,000	NA	1.0 U	1.0 U	NA	1.0 U	1.0 U	1.0 U	1.0 U	1.0 U	1.0 U	1.0 U	1.0 U	1.0 U	NA	1.0 U	1.0 U	1.0 U	1.0 U	1.0 U	1.0 U	1.0 U	1.0 U	1.0 U
	Trichlorofluoromethane (Freon 11)	NS	NS	NA	2.0 U	2.0 U	NA	2.0 U	2.0 U	2.0 U	2.0 U	2.0 U	2.0 U	2.0 U	2.0 U	2.0 U	NA	2.0 U	2.0 U	2.0 U	2.0 U	2.0 U	2.0 U	2.0 U	2.0 U	2.0 U
	1,2-Dichloroethane	5	20,000	NA	1.0 U	1.0 U	NA	1.0 U	1.0 U	1.0 U	1.0 U	1.0 U	1.0 U	1.0 U	1.0 U	1.0 U	NA	1.0 U	1.0 U	1.0 U	1.0 U	1.0 U	1.0 U	1.0 U	1.0 U	1.0 U
	1,1,1-Trichloroethane	4,000	20,000	NA	1.0 U	1.0 U	NA	1.0 U	1.0 U	1.0 U	1.0 U	1.0 U	1.0 U	**3.9**	**2.7**	1.0 U	NA	1.0 U	1.0 U	1.0 U	1.0 U	1.0 U	1.0 U	1.0 U	1.0 U	1.0 U
	Bromodichloromethane	6	50,000	NA	5.0 U	1.0 U	NA	5.0 U	1.0 U	1.0 U	1.0 U	1.0 U	1.0 U	1.0 U	1.0 U	1.0 U	NA	1.0 U	1.0 U	1.0 U	1.0 U	1.0 U	1.0 U	1.0 U	1.0 U	1.0 U
	trans-1,3-Dichloropropene	10[2]	200[2]	NA	5.0 U	0.50 U	NA	5.0 U	0.50 U	0.50 U	0.50 U	0.50 U	0.50 U	0.50 U	0.50 U	0.50 U	NA	0.50 U	0.50 U	0.50 U	0.50 U	0.50 U	0.50 U	0.50 U	0.50 U	0.50 U
	cis-1,3-Dichloropropene	10[2]	200[2]	NA	5.0 U	0.50 U	NA	5.0 U	0.50 U	0.50 U	0.50 U	0.50 U	0.50 U	0.50 U	0.50 U	0.50 U	NA	0.50 U	0.50 U	0.50 U	0.50 U	0.50 U	0.50 U	0.50 U	0.50 U	0.50 U
	1,3-Dichloropropene, Total	10	200	NA	NA	NA	NA	NA	NA	NA	NA	NA	NA	NA	NA	NA	NA	NA	NA	NA	NA	NA	NA	NA	NA	NA
	1,1-Dichloropropene	NS	NS	NA	2.0 U	2.0 U	NA	2.0 U	2.0 U	2.0 U	2.0 U	2.0 U	2.0 U	2.0 U	2.0 U	2.0 U	NA	2.0 U	2.0 U	2.0 U	2.0 U	2.0 U	2.0 U	2.0 U	2.0 U	2.0 U
	Bromoform	700	50,000	NA	10 U	2.0 U	NA	10 U	2.0 U	2.0 U	2.0 U	2.0 U	2.0 U	2.0 U	2.0 U	2.0 U	NA	2.0 U	2.0 U	2.0 U	2.0 U	2.0 U	2.0 U	2.0 U	2.0 U	2.0 U
	1,1,2,2-Tetrachloroethane	9	50,000	NA	0.50 U	1.0 U	NA	0.50 U	1.0 U	1.0 U	1.0 U	1.0 U	1.0 U	1.0 U	1.0 U	1.0 U	NA	1.0 U	1.0 U	1.0 U	1.0 U	1.0 U	1.0 U	1.0 U	1.0 U	1.0 U
	Benzene	1,000	10,000	NA	1.0 U	1.0 U	NA	1.0 U	1.0 U	1.0 U	1.0 U	1.0 U	1.0 U	1.0 U	1.0 U	1.0 U	NA	1.0 U	1.0 U	1.0 U	1.0 U	1.0 U	1.0 U	1.0 U	1.0 U	1.0 U
	Toluene	50,000	40,000	NA	1.0 U	1.0 U	NA	1.0 U	1.0 U	1.0 U	1.0 U	1.0 U	1.0 U	1.0 U	1.0 U	1.0 U	NA	1.0 U	1.0 U	1.0 U	1.0 U	1.0 U	1.0 U	1.0 U	1.0 U	1.0 U
	Ethylbenzene	20,000	5,000	NA	1.0 U	1.0 U	NA	1.0 U	1.0 U	1.0 U	1.0 U	1.0 U	1.0 U	1.0 U	1.0 U	1.0 U	NA	1.0 U	1.0 U	1.0 U	1.0 U	1.0 U	1.0 U	1.0 U	1.0 U	1.0 U
	Chloromethane	NS	NS	NA	2.0 U	2.0 U	NA	2.0 U	2.0 U	2.0 U	2.0 U	2.0 U	2.0 U	2.0 U	2.0 U	2.0 U	NA	2.0 U	2.0 U	2.0 U	2.0 U	2.0 U	2.0 U	2.0 U	2.0 U	2.0 U
	Bromomethane	7	800	NA	2.0 U	5.0 U	NA	2.0 U	5.0 U	5.0 U	5.0 U	2.0 U	2.0 U	2.0 U	2.0 U	5.0 U	NA	5.0 U	5.0 U	2.0 U	5.0 U	5.0 U	5.0 U	5.0 U	5.0 U	2.0 U
	Vinyl Chloride	2	50,000	NA	2.0 U	1.0 U	NA	**3.4**	**9.2**	**9.9**	**1.6**	**1.4**	**3.7**	1.0 U	1.0 U	1.0 U	NA	1.0 U	1.0 U	1.0 U	1.0 U	1.0 U	1.0 U	1.0 U	1.0 U	1.0 U
	Chloroethane	NS	NS	NA	2.0 U	2.0 U	NA	2.0 U	2.0 U	2.0 U	2.0 U	2.0 U	2.0 U	2.0 U	2.0 U	2.0 U	NA	2.0 U	2.0 U	2.0 U	2.0 U	2.0 U	2.0 U	2.0 U	2.0 U	2.0 U
	1,1-Dichloroethylene	80	30,000	NA	1.0 U	1.0 U	NA	1.0 U	1.0 U	1.0 U	1.0 U	1.0 U	1.0 U	1.0 U	1.0 U	1.0 U	NA	1.0 U	1.0 U	1.0 U	1.0 U	1.0 U	1.0 U	1.0 U	1.0 U	1.0 U
	trans-1,2-Dichloroethylene	80	50,000	NA	1.0 U	1.0 U	NA	1.0 U	1.0 U	1.0 U	1.0 U	1.0 U	1.0 U	1.0 U	1.0 U	1.0 U	NA	1.0 U	1.0 U	1.0 U	1.0 U	1.0 U	1.0 U	1.0 U	1.0 U	1.0 U
	Trichloroethylene	5	5,000	NA	1.0 U	1.0 U	NA	**6.8**	**5.8**	**6.5**	**4.5**	**14**	1.0 U	**13**	**10**	1.0 U	NA	1.0 U	1.0 U	1.0 U	1.0 U	1.0 U	1.0 U	1.0 U	1.0 U	1.0 U
	1,2-Dichlorobenzene	8,000	2,000	NA	1.0 U	1.0 U	NA	1.0 U	1.0 U	1.0 U	1.0 U	1.0 U	1.0 U	1.0 U	1.0 U	1.0 U	NA	1.0 U	1.0 U	1.0 U	1.0 U	1.0 U	1.0 U	1.0 U	1.0 U	1.0 U
	1,3-Dichlorobenzene	6,000	50,000	NA	1.0 U	1.0 U	NA	1.0 U	1.0 U	1.0 U	1.0 U	1.0 U	1.0 U	1.0 U	1.0 U	1.0 U	NA	1.0 U	1.0 U	1.0 U	1.0 U	1.0 U	1.0 U	1.0 U	1.0 U	1.0 U
	1,4-Dichlorobenzene	60	8,000	NA	1.0 U	1.0 U	NA	1.0 U	1.0 U	1.0 U	1.0 U	1.0 U	1.0 U	1.0 U	1.0 U	1.0 U	NA	1.0 U	1.0 U	1.0 U	1.0 U	1.0 U	1.0 U	1.0 U	1.0 U	1.0 U
	Methyl tert-Butyl Ether (MTBE)	50,000	50,000	NA	1.0 U	2.0 U	NA	1.0 U	2.0 U	2.0 U	2.0 U	2.0 U	2.0 U	2.0 U	2.0 U	2.0 U	NA	2.0 U	2.0 U	2.0 U	2.0 U	2.0 U	2.0 U	2.0 U	2.0 U	2.0 U
	m+p Xylene	3,000[3]	5,000[3]	NA	2.0 U	2.0 U	NA	2.0 U	2.0 U	2.0 U	2.0 U	2.0 U	2.0 U	2.0 U	2.0 U	2.0 U	NA	2.0 U	2.0 U	2.0 U	2.0 U	2.0 U	2.0 U	2.0 U	2.0 U	2.0 U
	o-Xylene	3,000[3]	5,000[3]	NA	1.0 U	1.0 U	NA	1.0 U	1.0 U	1.0 U	1.0 U	1.0 U	1.0 U	1.0 U	1.0 U	1.0 U	NA	1.0 U	1.0 U	1.0 U	1.0 U	1.0 U	1.0 U	1.0 U	1.0 U	1.0 U
	Xylene (Total)	3,000	5,000	NA	2.0 U	2.0 U	NA	2.0 U	2.0 U	2.0 U	2.0 U	2.0 U	2.0 U	2.0 U	2.0 U	2.0 U	NA	2.0 U	2.0 U	2.0 U	2.0 U	2.0 U	2.0 U	2.0 U	2.0 U	2.0 U
	cis-1,2-Dichloroethylene	20	50,000	NA	1.0 U	1.0 U	NA	**20**	**30**	**30**	**9.6**	**47**	**49**	**2.2**	**1.8**	1.0 U	NA	1.0 U	1.0 U	1.0 U	1.0 U	1.0 U	1.0 U	1.0 U	1.0 U	1.0 U
	1,2-Dichloroethene (total)	NS	NS	NA	NA	NA	NA	NA	NA	NA	NA	NA	NA	NA	NA	NA	NA	NA	NA	NA	NA	NA	NA	NA	NA	NA
	Dibromomethane	NS	NS	NA	1.0 U	2.0 U	NA	1.0 U	2.0 U	2.0 U	2.0 U	2.0 U	2.0 U	2.0 U	2.0 U	2.0 U	NA	2.0 U	2.0 U	2.0 U	2.0 U	2.0 U	2.0 U	2.0 U	2.0 U	2.0 U
	1,2,3-Trichloropropane	NS	NS	NA	2.0 U	2.0 U	NA	2.0 U	2.0 U	2.0 U	2.0 U	2.0 U	2.0 U	2.0 U	2.0 U	2.0 U	NA	2.0 U	2.0 U	2.0 U	2.0 U	2.0 U	2.0 U	2.0 U	2.0 U	2.0 U
	Styrene	100	6,000	NA	1.0 U	1.0 U	NA	1.0 U	1.0 U	1.0 U	1.0 U	1.0 U	1.0 U	1.0 U	1.0 U	1.0 U	NA	1.0 U	1.0 U	1.0 U	1.0 U	1.0 U	1.0 U	1.0 U	1.0 U	1.0 U
	Dichlorodifluoromethane (Freon 12)	NS	NS	NA	2.0 U	2.0 U	NA	2.0 U	2.0 U	2.0 U	2.0 U	2.0 U	2.0 U	2.0 U	2.0 U	2.0 U	NA	2.0 U	2.0 U	2.0 U	2.0 U	2.0 U	2.0 U	2.0 U	2.0 U	2.0 U
	Acetone	50,000	50,000	NA	50 U	5.0 U	NA	50 U	5.0 U	5.0 U	5.0 U	5.0 U	5.0 U	5.0 U	5.0 U	5.0 U	NA	5.0 U	5.0 U	5.0 U	5.0 U	5.0 U	5.0 U	5.0 U	5.0 U	5.0 U
	Carbon Disulfide	NS	NS	NA	5.0 U	2.0 U	NA	5.0 U	2.0 U	2.0 U	2.0 U	2.0 U	2.0 U	2.0 U	2.0 U	2.0 U	NA	2.0 U	2.0 U	2.0 U	2.0 U	2.0 U	2.0 U	2.0 U	2.0 U	2.0 U
	2-Butanone (MEK)	50,000	50,000	NA	20 U	5.0 U	NA	20 U	5.0 U	5.0 U	5.0 U	5.0 U	5.0 U	5.0 U	5.0 U	5.0 U	NA	5.0 U	5.0 U	5.0 U	5.0 U	5.0 U	5.0 U	5.0 U	5.0 U	5.0 U
	4-Methyl-2-pentanone (MIBK)	50,000	50,000	NA	10 U	5.0 U	NA	10 U	5.0 U	5.0 U	5.0 U	5.0 U	5.0 U	5.0 U	5.0 U	5.0 U	NA	5.0 U	5.0 U	5.0 U	5.0 U	5.0 U	5.0 U	5.0 U	5.0 U	5.0 U
	2-Hexanone (MBK)	NS	NS	NA	10 U	5.0 U	NA	10 U	5.0 U	5.0 U	5.0 U	5.0 U	5.0 U	5.0 U	5.0 U	5.0 U	NA	5.0 U	5.0 U	5.0 U	5.0 U	5.0 U	5.0 U	5.0 U	5.0 U	5.0 U
	Bromochloromethane	NS	NS	NA	1.0 U	2.0 U	NA	1.0 U	2.0 U	2.0 U	2.0 U	2.0 U	2.0 U	2.0 U	2.0 U	2.0 U	NA	2.0 U	2.0 U	2.0 U	2.0 U	2.0 U	2.0 U	2.0 U	2.0 U	2.0 U
	Tetrahydrofuran	NS	NS	NA	10 U	10 U	NA	10 U	10 U	10 U	10 U	10 U	10 U	10 U	10 U	10 U	NA	10 U	10 U	10 U	10 U	10 U	10 U	10 U	10 U	5.0 U
	2,2-Dichloropropane	NS	NS	NA	1.0 U	2.0 U	NA	1.0 U	2.0 U	2.0 U	2.0 U	2.0 U	2.0 U	2.0 U	2.0 U	2.0 U	NA	2.0 U	2.0 U	2.0 U	2.0 U	2.0 U	2.0 U	2.0 U	2.0 U	2.0 U
	1,2-Dibromoethane (EDB)	2	50,000	NA	0.50 U	2.0 U	NA	0.50 U	2.0 U	2.0 U	2.0 U	2.0 U	2.0 U	2.0 U	2.0 U	2.0 U	NA	2.0 U	2.0 U	2.0 U	2.0 U	2.0 U	2.0 U	2.0 U	2.0 U	2.0 U
	1,3-Dichloropropane	NS	NS	NA	0.50 U	2.0 U	NA	0.50 U	2.0 U	2.0 U	2.0 U	2.0 U	2.0 U	2.0 U	2.0 U	2.0 U	NA	2.0 U	2.0 U	2.0 U	2.0 U	2.0 U	2.0 U	2.0 U	2.0 U	2.0 U
	1,1,1,2-Tetrachloroethane	10	50,000	NA	5.0 U	1.0 U	NA	5.0 U	1.0 U	1.0 U	1.0 U	1.0 U	1.0 U	1.0 U	1.0 U	1.0 U	NA	1.0 U	1.0 U	1.0 U	1.0 U	1.0 U	1.0 U	1.0 U	1.0 U	1.0 U
	Bromobenzene	NS	NS	NA	1.0 U	2.0 U	NA	1.0 U	2.0 U	2.0 U	2.0 U	2.0 U	2.0 U	2.0 U	2.0 U	2.0 U	NA	2.0 U	2.0 U	2.0 U	2.0 U	2.0 U	2.0 U	2.0 U	2.0 U	2.0 U
	n-Butylbenzene	4,000[1]	50,000[1]	NA	1.0 U	2.0 U	NA	1.0 U	2.0 U	2.0 U	2.0 U	2.0 U	2.0 U	2.0 U	2.0 U	2.0 U	NA	2.0 U	2.0 U	2.0 U	2.0 U	2.0 U	2.0 U	2.0 U	2.0 U	2.0 U
	sec-Butylbenzene	4,000[1]	50,000[1]	NA	1.0 U	2.0 U	NA	1.0 U	2.0 U	2.0 U	2.0 U	2.0 U	2.0 U	2.0 U	2.0 U	2.0 U	NA	2.0 U	2.0 U	2.0 U	2.0 U	2.0 U	2.0 U	2.0 U	2.0 U	2.0 U
	tert-Butylbenzene	4,000[1]	50,000[1]	NA	1.0 U	2.0 U	NA	1.0 U	2.0 U	2.0 U	2.0 U	2.0 U	2.0 U	2.0 U	2.0 U	2.0 U	NA	2.0 U	2.0 U	2.0 U	2.0 U	2.0 U	2.0 U	2.0 U	2.0 U	2.0 U
	2-Chlorotoluene	NS	NS	NA	1.0 U	2.0 U	NA	1.0 U	2.0 U	2.0 U	2.0 U	2.0 U	2.0 U	2.0 U	2.0 U	2.0 U	NA	2.0 U	2.0 U	2.0 U	2.0 U	2.0 U	2.0 U	2.0 U	2.0 U	2.0 U
	4-Chlorotoluene	NS	NS	NA	1.0 U	2.0 U	NA	1.0 U	2.0 U	2.0 U	2.0 U	2.0 U	2.0 U	2.0 U	2.0 U	2.0 U	NA	2.0 U	2.0 U	2.0 U	2.0 U	2.0 U	2.0 U	2.0 U	2.0 U	2.0 U
	1,2-Dibromo-3-chloropropane (DBCP)	NS	NS	NA	10 U	5.0 U	NA	10 U	5.0 U	5.0 U	5.0 U	2.0 U	2.0 U	2.0 U	2.0 U	5.0 U	NA	5.0 U	5.0 U	2.0 U	5.0 U	5.0 U	5.0 U	5.0 U	5.0 U	2.0 U
	Hexachlorobutadiene	50	3,000	NA	1.0 U	0.60 U	NA	1.0 U	0.60 U	0.60 U	0.60 U	0.60 U	0.60 U	0.60 U	0.60 U	0.60 U	NA	0.60 U	0.60 U	0.60 U	0.60 U	0.60 U	0.60 U	0.60 U	0.60 U	0.60 U
	Isopropylbenzene (Cumene)	4,000[1]	50,000[1]	NA	1.0 U	2.0 U	NA	1.0 U	2.0 U	2.0 U	2.0 U	2.0 U	2.0 U	2.0 U	2.0 U	2.0 U	NA	2.0 U	2.0 U	2.0 U	2.0 U	2.0 U	2.0 U	2.0 U	2.0 U	2.0 U
	p-Isopropyltoluene (p-Cymene)	4,000[1]	50,000[1]	NA	1.0 U	2.0 U	NA	1.0 U	2.0 U	2.0 U	2.0 U	2.0 U	2.0 U	2.0 U	2.0 U	2.0 U	NA	2.0 U	2.0 U	2.0 U	2.0 U	2.0 U	2.0 U	2.0 U	2.0 U	2.0 U
	Naphthalene	700	20,000	NA	2.0 U	5.0 U	NA	2.0 U	5.0 U	5.0 U	5.0 U	5.0 U	2.0 U	5.0 U	5.0 U	5.0 U	NA	5.0 U	5.0 U	2.0 U	5.0 U	5.0 U	5.0 U	5.0 U	5.0 U	2.0 U
	n-Propylbenzene	4,000[1]	50,000[1]	NA	1.0 U	2.0 U	NA	1.0 U	2.0 U	2.0 U	2.0 U	2.0 U	2.0 U	2.0 U	2.0 U	2.0 U	NA	2.0 U	2.0 U	2.0 U	2.0 U	2.0 U	2.0 U	2.0 U	2.0 U	2.0 U
	1,2,3-Trichlorobenzene	NS	NS	NA	5.0 U	2.0 U	NA	5.0 U	2.0 U	2.0 U	2.0 U	2.0 U	2.0 U	2.0 U	2.0 U	2.0 U	NA	2.0 U	2.0 U	2.0 U	2.0 U	2.0 U	2.0 U	2.0 U	2.0 U	2.0 U
	1,2,4-Trichlorobenzene	200	50,000	NA	1.0 U	2.0 U	NA	1.0 U	2.0 U	2.0 U	2.0 U	2.0 U	2.0 U	2.0 U	2.0 U	2.0 U	NA	2.0 U	2.0 U	2.0 U	2.0 U	2.0 U	2.0 U	2.0 U	2.0 U	2.0 U
	1,3,5-Trimethylbenzene	4,000[1]	50,000[1]	NA	1.0 U	2.0 U	NA	1.0 U	2.0 U	2.0 U	2.0 U	2.0 U	2.0 U	2.0 U	2.0 U	2.0 U	NA	2.0 U	2.0 U	2.0 U	2.0 U	2.0 U	2.0 U	2.0 U	2.0 U	2.0 U
	1,2,4-Trimethylbenzene	4,000[1]	50,000[1]	NA	1.0 U	2.0 U	NA	1.0 U	2.0 U	2.0 U	2.0 U	2.0 U	2.0 U	2.0 U	2.0 U	2.0 U	NA	2.0 U	2.0 U	2.0 U	2.0 U	2.0 U	2.0 U	2.0 U	2.0 U	2.0 U
	Diisopropyl Ether (DIPE)	NS	NS	NA	0.50 U	2.0 U	NA	0.50 U	2.0 U	2.0 U	2.0 U	2.0 U	2.0 U	2.0 U	2.0 U	2.0 U	NA	2.0 U	2.0 U	2.0 U	2.0 U	2.0 U	2.0 U	2.0 U	2.0 U	2.0 U
	tert-Butyl Ethyl Ether (TBEE)	NS	NS	NA	0.50 U	2.0 U	NA	0.50 U	2.0 U	2.0 U	2.0 U	2.0 U	2.0 U	2.0 U	2.0 U	2.0 U	NA	2.0 U	2.0 U	2.0 U	2.0 U	2.0 U	2.0 U	2.0 U	2.0 U	2.0 U
	tert-Amyl Methyl Ether (TAME)	NS	NS	NA	0.50 U	2.0 U	NA	0.50 U	2.0 U	2.0 U	2.0 U	2.0 U	2.0 U	2.0 U	2.0 U	2.0 U	NA	2.0 U	2.0 U	2.0 U	2.0 U	2.0 U	2.0 U	2.0 U	2.0 U	2.0 U
	1,4-Dioxane	6,000	50,000	NA	50 U	250 U	NA	50 U	250 U	250 U	250 U	250 U	250 U	250 U	250 U	250 U	NA	250 U	250 U	250 U	250 U	250 U	250 U	250 U	250 U	250 U
	Diethyl Ether	NS	NS	NA	2.0 U	2.0 U	NA	2.0 U	2.0 U	2.0 U	2.0 U	2.0 U	2.0 U	2.0 U	2.0 U	2.0 U	NA	2.0 U	2.0 U	2.0 U	2.0 U	2.0 U	2.0 U	2.0 U	2.0 U	2.0 U

Table 2
Summary of Analytical Results for Groundwater Samples --
2008 through 2015
New Bedford High School
New Bedford, Massachusetts

Analysis	Analyte		Sample ID:	MW-6			MW-7							MW-7D		MW-8A	MW-8B	MW-11			MW-12	MW-13	MW-14	MW-15	MW-16	
		Filter Size (micron)^:		N/A	N/A	N/A	N/A	N/A	N/A	N/A	N/A	N/A	N/A	N/A	N/A	N/A	N/A	N/A	N/A	N/A	N/A	N/A	N/A	N/A	N/A	N/A
		Sample Date:		8/19/2008	1/7/2010	2/18/2010	9/16/2008	1/7/2010	2/17/2010	2/17/2010	4/7/2010	9/9/2010	10/22/2010	9/9/2010	9/9/2010	2/18/2010	9/16/2008	2/19/2010	4/7/2010	9/13/2010	2/18/2010	2/19/2010	2/19/2010	2/18/2010	2/19/2010	4/28/2011
		GW-2	GW-3							Field Dup					Field Dup											
PAHs																										
(ug/L)	Acenaphthene	NS	10,000	0.30 U	NA	NA	5.0 U	NA	NA	NA	NA	NA	NA	NA	NA	NA	5.0 U	NA	NA	NA	NA	NA	NA	NA	NA	NA
	Acenaphthylene	10,000	40	0.30 U	NA	NA	5.0 U	NA	NA	NA	NA	NA	NA	NA	NA	NA	5.0 U	NA	NA	NA	NA	NA	NA	NA	NA	NA
	Anthracene	NS	30	0.20 U	NA	NA	5.0 U	NA	NA	NA	NA	NA	NA	NA	NA	NA	5.0 U	NA	NA	NA	NA	NA	NA	NA	NA	NA
	Benzo(a)anthracene	NS	1,000	0.05 U	NA	NA	5.0 U	NA	NA	NA	NA	NA	NA	NA	NA	NA	5.0 U	NA	NA	NA	NA	NA	NA	NA	NA	NA
	Benzo(a)pyrene	NS	500	0.10 U	NA	NA	5.0 U	NA	NA	NA	NA	NA	NA	NA	NA	NA	5.0 U	NA	NA	NA	NA	NA	NA	NA	NA	NA
	Benzo(b)fluoranthene	NS	400	0.05 U	NA	NA	5.0 U	NA	NA	NA	NA	NA	NA	NA	NA	NA	5.0 U	NA	NA	NA	NA	NA	NA	NA	NA	NA
	Benzo(g,h,i)perylene	NS	20	0.50 U	NA	NA	5.0 U	NA	NA	NA	NA	NA	NA	NA	NA	NA	5.0 U	NA	NA	NA	NA	NA	NA	NA	NA	NA
	Benzo(k)fluoranthene	NS	100	0.20 U	NA	NA	5.0 U	NA	NA	NA	NA	NA	NA	NA	NA	NA	5.0 U	NA	NA	NA	NA	NA	NA	NA	NA	NA
	Chrysene	NS	70	0.20 U	NA	NA	5.0 U	NA	NA	NA	NA	NA	NA	NA	NA	NA	5.0 U	NA	NA	NA	NA	NA	NA	NA	NA	NA
	Dibenz(a,h)anthracene	NS	40	0.50 U	NA	NA	5.0 U	NA	NA	NA	NA	NA	NA	NA	NA	NA	5.0 U	NA	NA	NA	NA	NA	NA	NA	NA	NA
	Fluoranthene	NS	200	0.50 U	NA	NA	5.0 U	NA	NA	NA	NA	NA	NA	NA	NA	NA	5.0 U	NA	NA	NA	NA	NA	NA	NA	NA	NA
	Fluorene	NS	40	1.0 U	NA	NA	5.0 U	NA	NA	NA	NA	NA	NA	NA	NA	NA	5.0 U	NA	NA	NA	NA	NA	NA	NA	NA	NA
	Indeno(1,2,3-cd)pyrene	NS	100	0.50 U	NA	NA	5.0 U	NA	NA	NA	NA	NA	NA	NA	NA	NA	5.0 U	NA	NA	NA	NA	NA	NA	NA	NA	NA
	2-Methylnaphthalene	2,000	20,000	1.0 U	NA	NA	5.0 U	NA	NA	NA	NA	NA	NA	NA	NA	NA	5.0 U	NA	NA	NA	NA	NA	NA	NA	NA	NA
	Naphthalene	700	20,000	1.0 U	NA	NA	5.0 U	NA	NA	NA	NA	NA	NA	NA	NA	NA	5.0 U	NA	NA	NA	NA	NA	NA	NA	NA	NA
	Phenanthrene	NS	10,000	**0.09**	NA	NA	5.0 U	NA	NA	NA	NA	NA	NA	NA	NA	NA	5.0 U	NA	NA	NA	NA	NA	NA	NA	NA	NA
	Pyrene	NS	20	1.0 U	NA	NA	5.0 U	NA	NA	NA	NA	NA	NA	NA	NA	NA	5.0 U	NA	NA	NA	NA	NA	NA	NA	NA	NA
PCBs																										
(ug/L)	Aroclor 1016	NS	NS	0.0500 U	NA	NA	0.0500 U	NA	NA	NA	NA	NA	NA	NA	NA	NA	0.0500 U	NA	NA	NA	NA	NA	NA	NA	NA	NA
	Aroclor 1221	NS	NS	0.0500 U	NA	NA	0.0500 U	NA	NA	NA	NA	NA	NA	NA	NA	NA	0.0500 U	NA	NA	NA	NA	NA	NA	NA	NA	NA
	Aroclor 1232	NS	NS	0.0500 U	NA	NA	0.0500 U	NA	NA	NA	NA	NA	NA	NA	NA	NA	0.0500 U	NA	NA	NA	NA	NA	NA	NA	NA	NA
	Aroclor 1242	NS	NS	0.0500 U	NA	NA	0.0500 U	NA	NA	NA	NA	NA	NA	NA	NA	NA	0.0500 U	NA	NA	NA	NA	NA	NA	NA	NA	NA
	Aroclor 1248	NS	NS	0.0500 U	NA	NA	0.0500 U	NA	NA	NA	NA	NA	NA	NA	NA	NA	0.0500 U	NA	NA	NA	NA	NA	NA	NA	NA	NA
	Aroclor 1254	NS	NS	0.0500 U	NA	NA	0.0500 U	NA	NA	NA	NA	NA	NA	NA	NA	NA	0.0500 U	NA	NA	NA	NA	NA	NA	NA	NA	NA
	Aroclor 1260	NS	NS	0.0500 U	NA	NA	0.0500 U	NA	NA	NA	NA	NA	NA	NA	NA	NA	0.0500 U	NA	NA	NA	NA	NA	NA	NA	NA	NA
	Aroclor 1262	NS	NS	NA	NA	NA	NA	NA	NA	NA	NA	NA	NA	NA	NA	NA	NA	NA	NA	NA	NA	NA	NA	NA	NA	NA
	Aroclor 1268	NS	NS	NA	NA	NA	NA	NA	NA	NA	NA	NA	NA	NA	NA	NA	NA	NA	NA	NA	NA	NA	NA	NA	NA	NA
	Total PCBs	5	10	0.0500 U	NA	NA	0.0500 U	NA	NA	NA	NA	NA	NA	NA	NA	NA	0.0500 U	NA	NA	NA	NA	NA	NA	NA	NA	NA
Total Petroleum Hydrocarbons																										
(ug/L)	Total Petroleum Hydrocarbons (C9-C44)	5,000	5,000	NA	NA	NA	NA	NA	NA	NA	NA	NA	NA	NA	NA	NA	NA	NA	NA	NA	NA	NA	NA	NA	NA	NA
Metals, total																										
(ug/L)	Antimony	NS	8,000	3.0 U	NA	NA	5.0 U	NA	NA	NA	NA	NA	NA	NA	NA	NA	5.0 U	NA	NA	NA	NA	NA	NA	NA	NA	NA
	Arsenic	NS	900	**13.0**	NA	NA	2.0 U	NA	NA	NA	NA	NA	NA	NA	NA	NA	2.0 U	NA	NA	NA	NA	NA	NA	NA	NA	NA
	Barium	NS	50,000	50 U	NA	NA	**254**	NA	NA	NA	NA	NA	NA	NA	NA	NA	250 U	NA	NA	NA	NA	NA	NA	NA	NA	NA
	Beryllium	NS	200	2.0 U	NA	NA	2.0 U	NA	NA	NA	NA	NA	NA	NA	NA	NA	2.0 U	NA	NA	NA	NA	NA	NA	NA	NA	NA
	Cadmium	NS	4	2.5 U	NA	NA	2.5 U	NA	NA	NA	NA	NA	NA	NA	NA	NA	2.5 U	NA	NA	NA	NA	NA	NA	NA	NA	NA
	Chromium	NS	300	5.0 U	NA	NA	50 U	NA	NA	NA	NA	NA	NA	NA	NA	NA	50 U	NA	NA	NA	NA	NA	NA	NA	NA	NA
	Lead	NS	10	7.5 U	NA	NA	5.0 U	NA	NA	NA	NA	NA	NA	NA	NA	NA	5.0 U	NA	NA	NA	NA	NA	NA	NA	NA	NA
	Mercury	NS	20	0.10 U	NA	NA	0.10 U	NA	NA	NA	NA	NA	NA	NA	NA	NA	0.10 U	NA	NA	NA	NA	NA	NA	NA	NA	NA
	Nickel	NS	200	5.0 U	NA	NA	**29.4**	NA	NA	NA	NA	NA	NA	NA	NA	NA	25 U	NA	NA	NA	NA	NA	NA	NA	NA	NA
	Selenium	NS	100	30 U	NA	NA	25 U	NA	NA	NA	NA	NA	NA	NA	NA	NA	25 U	NA	NA	NA	NA	NA	NA	NA	NA	NA
	Silver	NS	7	**3.0**	NA	NA	2.5 U	NA	NA	NA	NA	NA	NA	NA	NA	NA	2.5 U	NA	NA	NA	NA	NA	NA	NA	NA	NA
	Thallium	NS	3,000	1.0 U	NA	NA	1.0 U	NA	NA	NA	NA	NA	NA	NA	NA	NA	**1.29**	NA	NA	NA	NA	NA	NA	NA	NA	NA
	Vanadium	NS	4,000	25 U	NA	NA	25 U	NA	NA	NA	NA	NA	NA	NA	NA	NA	25 U	NA	NA	NA	NA	NA	NA	NA	NA	NA
	Zinc	NS	900	**110**	NA	NA	**894**	NA	NA	NA	NA	NA	NA	NA	NA	NA	100 U	NA	NA	NA	NA	NA	NA	NA	NA	NA
Metals, dissolved																										
(ug/L)	Antimony	NS	8,000	3.0 U	NA	NA	5.0 U	NA	NA	NA	NA	NA	NA	NA	NA	NA	5.0 U	NA	NA	NA	NA	NA	NA	NA	NA	NA
	Arsenic	NS	900	**10**	NA	NA	**2.41**	NA	NA	NA	NA	NA	NA	NA	NA	NA	2.0 U	NA	NA	NA	NA	NA	NA	NA	NA	NA
	Barium	NS	50,000	50 U	NA	NA	250 U	NA	NA	NA	NA	NA	NA	NA	NA	NA	250 U	NA	NA	NA	NA	NA	NA	NA	NA	NA
	Beryllium	NS	200	2.0 U	NA	NA	2.0 U	NA	NA	NA	NA	NA	NA	NA	NA	NA	2.0 U	NA	NA	NA	NA	NA	NA	NA	NA	NA
	Cadmium	NS	4	2.5 U	NA	NA	2.5 U	NA	NA	NA	NA	NA	NA	NA	NA	NA	2.5 U	NA	NA	NA	NA	NA	NA	NA	NA	NA
	Chromium	NS	300	5.0 U	NA	NA	50 U	NA	NA	NA	NA	NA	NA	NA	NA	NA	50 U	NA	NA	NA	NA	NA	NA	NA	NA	NA
	Lead	NS	10	8.0 U	NA	NA	5.0 U	NA	NA	NA	NA	NA	NA	NA	NA	NA	5.0 U	NA	NA	NA	NA	NA	NA	NA	NA	NA
	Mercury	NS	20	0.10 U	NA	NA	0.10 U	NA	NA	NA	NA	NA	NA	NA	NA	NA	0.10 U	NA	NA	NA	NA	NA	NA	NA	NA	NA
	Nickel	NS	200	5.0 U	NA	NA	**27.7**	NA	NA	NA	NA	NA	NA	NA	NA	NA	25 U	NA	NA	NA	NA	NA	NA	NA	NA	NA
	Selenium	NS	100	30 U	NA	NA	25 U	NA	NA	NA	NA	NA	NA	NA	NA	NA	25 U	NA	NA	NA	NA	NA	NA	NA	NA	NA
	Silver	NS	7	**2.6**	NA	NA	2.5 U	NA	NA	NA	NA	NA	NA	NA	NA	NA	2.5 U	NA	NA	NA	NA	NA	NA	NA	NA	NA
	Thallium	NS	3,000	1.0 U	NA	NA	1.0 U	NA	NA	NA	NA	NA	NA	NA	NA	NA	1.0 U	NA	NA	NA	NA	NA	NA	NA	NA	NA
	Vanadium	NS	4,000	50 U	NA	NA	25 U	NA	NA	NA	NA	NA	NA	NA	NA	NA	25 U	NA	NA	NA	NA	NA	NA	NA	NA	NA
	Zinc	NS	900	10 U	NA	NA	**870**	NA	NA	NA	NA	NA	NA	NA	NA	NA	100 U	NA	NA	NA	NA	NA	NA	NA	NA	NA
General Chemistry																										
(ug/L)	Nitrogen, Nitrate	NS	NS	NA	NA	NA	NA	NA	NA	NA	NA	100 U	NA	100 U	100 U	NA	NA	NA	NA	NA	NA	NA	NA	NA	NA	NA
	Sulfate	NS	NS	NA	NA	NA	NA	NA	NA	NA	NA	**25,000**	NA	**20,000**	**20,000**	NA	NA	NA	NA	NA	NA	NA	NA	NA	NA	NA
	Total Organic Carbon	NS	NS	NA	NA	NA	NA	NA	NA	NA	NA	**7,400**	NA	**6,100**	**6,100**	NA	NA	NA	NA	NA	NA	NA	NA	NA	NA	NA

Notes:
ug/L - micrograms per liter.
B - Compound detected in associated method blank
J - Estimated value.
NA - Sample not analyzed for the listed analyte.
N/A - Not applicable.
NS - No MassDEP standards exist for this compound.
U - Compound was not detected at specified quantitation limit.
Values in **Bold** indicate the compound was detected.
VOCs - Volatile Organic Compounds.
PAHs - Polynuclear Aromatic Hydrocarbons.
PCBs - Polychlorinated Biphenyls.
(1) - MassDEP Method 1 standards for C9-C10 aromatic hydrocarbons used.
(2) - MassDEP Method 1 standards for 1,3-Dichloropropene used.
(3) - criteria applicable to xylene (total), the sum of the xylene isomers.
^ - 0.45 micron filtration done in field; 0.20 and 2.0 micron filtration performed in lab.
* - Sample collected on 4/10/2012 for PCB analysis was broken and was recollected on 4/18/2012.
** - Lab filtered sample using a 2.0 micron filter and then filtered a second time using a 0.20 micron fil

Table 2
Summary of Analytical Results for Groundwater Samples --
2008 through 2015
New Bedford High School
New Bedford, Massachusetts

Analysis	Analyte		Sample ID:	MW-17	MW-18					MW-19	MW-20		MW-21		MW-22			MW-23		MW-24				MW-25	MW-26	MW-27	
			Filter Size (micron)^:	N/A	N/A	N/A	N/A	N/A	N/A	N/A	N/A	N/A	N/A	N/A	N/A	N/A	N/A	N/A	N/A	N/A	N/A	N/A	N/A	N/A	N/A	N/A	N/A
			Sample Date:	2/18/2010	2/18/2010	4/9/2010	9/13/2010	4/28/2011	4/10/2012	2/18/2010	4/8/2010	9/10/2010	4/8/2010	9/13/2010	4/8/2010	4/8/2010	9/13/2010	4/8/2010	9/13/2010	4/8/2010	9/10/2010	10/21/2010	10/21/2010	9/8/2010	9/8/2010	9/9/2010	10/21/2010
		GW-2	GW-3													Field Dup							Field Dup				
VOCs																											
(ug/L)	Methylene Chloride	2,000	50,000	5.0 U	5.0 U	5.0 U	2.0 U	2.0 U	2.0 U	5.0 U	5.0 U	2.0 U	5.0 U	2.0 U	5.0 U	5.0 U	2.0 U	5.0 U	2.0 U	5.0 U	2.0 U	2.0 U	2.0 U	2.0 U	2.0 U	800 U	200 U
	1,1-Dichloroethane	2,000	20,000	1.0 U	1.0 U	1.0 U	1.0 U	1.0 U	1.0 U	1.0 U	1.0 U	1.0 U	1.0 U	1.0 U	1.0 U	1.0 U	1.0 U	1.0 U	1.0 U	1.0 U	1.0 U	1.0 U	1.0 U	1.0 U	1.0 U	400 U	100 U
	Chloroform	50	20,000	1.0 U	1.0 U	1.0 U	1.0 U	1.0 U	1.0 U	1.0 U	1.0 U	1.0 U	1.0 U	1.0 U	1.0 U	1.0 U	1.0 U	1.0 U	1.0 U	1.0 U	1.0 U	1.0 U	1.0 U	1.0 U	1.0 U	400 U	100 U
	Carbon Tetrachloride	2	5,000	1.0 U	1.0 U	1.0 U	1.0 U	1.0 U	1.0 U	1.0 U	1.0 U	1.0 U	1.0 U	1.0 U	1.0 U	1.0 U	1.0 U	1.0 U	1.0 U	1.0 U	1.0 U	1.0 U	1.0 U	1.0 U	1.0 U	400 U	100 U
	1,2-Dichloropropane	3	50,000	1.0 U	1.0 U	1.0 U	1.0 U	1.0 U	1.0 U	1.0 U	1.0 U	1.0 U	1.0 U	1.0 U	1.0 U	1.0 U	1.0 U	1.0 U	1.0 U	1.0 U	1.0 U	1.0 U	1.0 U	1.0 U	1.0 U	400 U	100 U
	Chlorodibromomethane	20	50,000	1.0 U	1.0 U	1.0 U	1.0 U	1.0 U	1.0 U	1.0 U	1.0 U	1.0 U	1.0 U	1.0 U	1.0 U	1.0 U	1.0 U	1.0 U	1.0 U	1.0 U	1.0 U	1.0 U	1.0 U	1.0 U	1.0 U	400 U	100 U
	1,1,2-Trichloroethane	900	50,000	1.0 U	1.0 U	1.0 U	1.0 U	1.0 U	1.0 U	1.0 U	1.0 U	1.0 U	1.0 U	1.0 U	1.0 U	1.0 U	1.0 U	1.0 U	1.0 U	1.0 U	1.0 U	1.0 U	1.0 U	1.0 U	1.0 U	400 U	100 U
	Tetrachloroethylene	50	30,000	1.0 U	1.0 U	1.0 U	1.0 U	1.0 U	1.0 U	1.0 U	1.0 U	1.0 U	1.0 U	1.0 U	1.0 U	1.0 U	1.0 U	1.0 U	1.0 U	1.0 U	1.0 U	1.0 U	1.0 U	1.0 U	1.0 U	400 U	100 U
	Chlorobenzene	200	1,000	1.0 U	1.0 U	1.0 U	1.0 U	1.0 U	1.0 U	1.0 U	1.0 U	1.0 U	1.0 U	1.0 U	1.0 U	1.0 U	1.0 U	1.0 U	1.0 U	1.0 U	1.0 U	1.0 U	1.0 U	1.0 U	1.0 U	400 U	100 U
	Trichlorofluoromethane (Freon 11)	NS	NS	2.0 U	2.0 U	2.0 U	2.0 U	2.0 U	2.0 U	2.0 U	2.0 U	2.0 U	2.0 U	2.0 U	2.0 U	2.0 U	2.0 U	2.0 U	2.0 U	2.0 U	2.0 U	2.0 U	2.0 U	2.0 U	2.0 U	800 U	200 U
	1,2-Dichloroethane	5	20,000	1.0 U	1.0 U	1.0 U	1.0 U	1.0 U	1.0 U	1.0 U	1.0 U	1.0 U	1.0 U	1.0 U	1.0 U	1.0 U	1.0 U	1.0 U	1.0 U	1.0 U	1.0 U	1.0 U	1.0 U	1.0 U	1.0 U	400 U	100 U
	1,1,1-Trichloroethane	4,000	20,000	1.0 U	1.0 U	1.0 U	1.0 U	1.0 U	1.0 U	1.0 U	1.0 U	1.0 U	1.0 U	1.0 U	1.0 U	1.0 U	1.0 U	1.0 U	1.0 U	1.0 U	1.0 U	1.0 U	1.0 U	1.0 U	1.0 U	400 U	100 U
	Bromodichloromethane	6	50,000	1.0 U	1.0 U	1.0 U	1.0 U	1.0 U	1.0 U	1.0 U	1.0 U	1.0 U	1.0 U	1.0 U	1.0 U	1.0 U	1.0 U	1.0 U	1.0 U	1.0 U	1.0 U	1.0 U	1.0 U	1.0 U	1.0 U	400 U	100 U
	trans-1,3-Dichloropropene	10[2]	200[2]	0.50 U	0.50 U	0.50 U	0.50 U	0.50 U	0.50 U	0.50 U	0.50 U	0.50 U	0.50 U	0.50 U	0.50 U	0.50 U	0.50 U	0.50 U	0.50 U	0.50 U	0.50 U	0.50 U	0.50 U	0.50 U	0.50 U	200 U	50 U
	cis-1,3-Dichloropropene	10[2]	200[2]	0.50 U	0.50 U	0.50 U	0.50 U	0.50 U	0.50 U	0.50 U	0.50 U	0.50 U	0.50 U	0.50 U	0.50 U	0.50 U	0.50 U	0.50 U	0.50 U	0.50 U	0.50 U	0.50 U	0.50 U	0.50 U	0.50 U	200 U	50 U
	1,3-Dichloropropene, Total	10	200	NA	NA	NA	NA	NA	NA	NA	NA	NA	NA	NA	NA	NA	NA	NA	NA	NA	NA	NA	NA	NA	NA	NA	NA
	1,1-Dichloropropene	NS	NS	2.0 U	2.0 U	2.0 U	2.0 U	2.0 U	2.0 U	2.0 U	2.0 U	2.0 U	2.0 U	2.0 U	2.0 U	2.0 U	2.0 U	2.0 U	2.0 U	2.0 U	2.0 U	2.0 U	2.0 U	2.0 U	2.0 U	800 U	200 U
	Bromoform	700	50,000	2.0 U	2.0 U	2.0 U	2.0 U	2.0 U	2.0 U	2.0 U	2.0 U	2.0 U	2.0 U	2.0 U	2.0 U	2.0 U	2.0 U	2.0 U	2.0 U	2.0 U	2.0 U	2.0 U	2.0 U	2.0 U	2.0 U	800 U	200 U
	1,1,2,2-Tetrachloroethane	9	50,000	1.0 U	1.0 U	1.0 U	1.0 U	1.0 U	1.0 U	1.0 U	1.0 U	1.0 U	1.0 U	1.0 U	1.0 U	1.0 U	1.0 U	1.0 U	1.0 U	1.0 U	1.0 U	1.0 U	1.0 U	1.0 U	1.0 U	400 U	100 U
	Benzene	1,000	10,000	1.0 U	1.0 U	1.0 U	1.0 U	1.0 U	0.50 U	1.0 U	1.0 U	1.0 U	1.0 U	1.0 U	1.0 U	1.0 U	1.0 U	1.0 U	1.0 U	1.0 U	1.0 U	1.0 U	1.0 U	1.0 U	1.0 U	400 U	100 U
	Toluene	50,000	40,000	1.0 U	1.0 U	1.0 U	1.0 U	1.0 U	1.0 U	1.0 U	1.0 U	1.0 U	1.0 U	1.0 U	1.0 U	1.0 U	1.0 U	1.0 U	1.0 U	1.0 U	1.0 U	1.0 U	1.0 U	1.0 U	1.0 U	400 U	100 U
	Ethylbenzene	20,000	5,000	1.0 U	1.0 U	1.0 U	1.0 U	1.0 U	1.0 U	1.0 U	1.0 U	1.0 U	1.0 U	1.0 U	1.0 U	1.0 U	1.0 U	1.0 U	1.0 U	1.0 U	1.0 U	1.0 U	1.0 U	1.0 U	1.0 U	400 U	100 U
	Chloromethane	NS	NS	2.0 U	2.0 U	2.0 U	2.0 U	2.0 U	2.0 U	2.0 U	2.0 U	2.0 U	2.0 U	2.0 U	2.0 U	2.0 U	2.0 U	2.0 U	2.0 U	2.0 U	2.0 U	2.0 U	2.0 U	2.0 U	2.0 U	800 U	200 U
	Bromomethane	7	800	5.0 U	5.0 U	5.0 U	2.0 U	2.0 U	2.0 U	5.0 U	5.0 U	2.0 U	5.0 U	2.0 U	5.0 U	5.0 U	2.0 U	5.0 U	2.0 U	5.0 U	2.0 U	2.0 U	2.0 U	2.0 U	2.0 U	800 U	200 U
	Vinyl Chloride	2	50,000	1.0 U	1.0 U	1.0 U	1.0 U	1.0 U	1.0 U	1.0 U	1.0 U	1.0 U	1.0 U	1.0 U	1.0 U	1.0 U	1.0 U	1.0 U	1.0 U	**4.8**	**1.5**	**1.2**	**1.2**	1.0 U	1.0 U	**550.0**	**10.3 J**
	Chloroethane	NS	NS	2.0 U	2.0 U	2.0 U	2.0 U	2.0 U	2.0 U	2.0 U	2.0 U	2.0 U	2.0 U	2.0 U	2.0 U	2.0 U	2.0 U	2.0 U	2.0 U	2.0 U	2.0 U	2.0 U	2.0 U	2.0 U	2.0 U	800 U	200 U
	1,1-Dichloroethylene	80	30,000	1.0 U	1.0 U	1.0 U	1.0 U	1.0 U	1.0 U	1.0 U	1.0 U	1.0 U	1.0 U	1.0 U	1.0 U	1.0 U	1.0 U	1.0 U	1.0 U	1.0 U	1.0 U	1.0 U	1.0 U	1.0 U	1.0 U	400 U	100 U
	trans-1,2-Dichloroethylene	80	50,000	1.0 U	1.0 U	1.0 U	1.0 U	1.0 U	1.0 U	1.0 U	1.0 U	1.0 U	1.0 U	1.0 U	1.0 U	1.0 U	1.0 U	1.0 U	1.0 U	1.0 U	1.0 U	1.0 U	1.0 U	1.0 U	1.0 U	**700**	**26.5 J**
	Trichloroethylene	5	5,000	1.0 U	1.0 U	1.0 U	1.0 U	1.0 U	1.0 U	1.0 U	**1.5**	1.0 U	1.0 U	1.0 U	1.0 U	1.0 U	1.0 U	1.0 U	1.0 U	1.0 U	1.0 U	1.0 U	1.0 U	1.0 U	1.0 U	**31,000**	**4,500**
	1,2-Dichlorobenzene	8,000	2,000	1.0 U	1.0 U	1.0 U	1.0 U	1.0 U	1.0 U	1.0 U	1.0 U	1.0 U	1.0 U	1.0 U	1.0 U	1.0 U	1.0 U	1.0 U	1.0 U	1.0 U	1.0 U	1.0 U	1.0 U	1.0 U	1.0 U	400 U	100 U
	1,3-Dichlorobenzene	6,000	50,000	1.0 U	1.0 U	1.0 U	1.0 U	1.0 U	1.0 U	1.0 U	1.0 U	1.0 U	1.0 U	1.0 U	1.0 U	1.0 U	1.0 U	1.0 U	1.0 U	1.0 U	1.0 U	1.0 U	1.0 U	1.0 U	1.0 U	400 U	100 U
	1,4-Dichlorobenzene	60	8,000	1.0 U	1.0 U	1.0 U	1.0 U	1.0 U	1.0 U	1.0 U	1.0 U	1.0 U	1.0 U	1.0 U	1.0 U	1.0 U	1.0 U	1.0 U	1.0 U	1.0 U	1.0 U	1.0 U	1.0 U	1.0 U	1.0 U	400 U	100 U
	Methyl tert-Butyl Ether (MTBE)	50,000	50,000	2.0 U	2.0 U	2.0 U	2.0 U	2.0 U	2.0 U	2.0 U	2.0 U	2.0 U	2.0 U	2.0 U	2.0 U	2.0 U	2.0 U	2.0 U	2.0 U	2.0 U	2.0 U	2.0 U	2.0 U	2.0 U	2.0 U	800 U	200 U
	m+p Xylene	3,000[3]	5,000[3]	2.0 U	2.0 U	2.0 U	2.0 U	2.0 U	2.0 U	2.0 U	2.0 U	2.0 U	2.0 U	2.0 U	2.0 U	2.0 U	2.0 U	2.0 U	2.0 U	2.0 U	2.0 U	2.0 U	2.0 U	2.0 U	2.0 U	800 U	200 U
	o-Xylene	3,000[3]	5,000[3]	1.0 U	1.0 U	1.0 U	1.0 U	1.0 U	1.0 U	1.0 U	1.0 U	1.0 U	1.0 U	1.0 U	1.0 U	1.0 U	1.0 U	1.0 U	1.0 U	1.0 U	1.0 U	1.0 U	1.0 U	1.0 U	1.0 U	400 U	100 U
	Xylene (Total)	3,000	5,000	2.0 U	2.0 U	2.0 U	2.0 U	2.0 U	2.0 U	2.0 U	2.0 U	2.0 U	2.0 U	2.0 U	2.0 U	2.0 U	2.0 U	2.0 U	2.0 U	2.0 U	2.0 U	2.0 U	2.0 U	2.0 U	2.0 U	800 U	200 U
	cis-1,2-Dichloroethylene	20	50,000	1.0 U	1.0 U	1.0 U	1.0 U	1.0 U	1.0 U	1.0 U	**1.5**	**1.8**	1.0 U	1.0 U	1.0 U	1.0 U	1.0 U	1.0 U	1.0 U	**1.8**	1.0 U	1.0 U	1.0 U	1.0 U	1.0 U	**4,100**	**290**
	1,2-Dichloroethene (total)	NS	NS	NA	NA	NA	NA	NA	NA	NA	NA	NA	NA	NA	NA	NA	NA	NA	NA	NA	NA	NA	NA	NA	NA	NA	NA
	Dibromomethane	NS	NS	2.0 U	2.0 U	2.0 U	2.0 U	2.0 U	2.0 U	2.0 U	2.0 U	2.0 U	2.0 U	2.0 U	2.0 U	2.0 U	2.0 U	2.0 U	2.0 U	2.0 U	2.0 U	2.0 U	2.0 U	2.0 U	2.0 U	800 U	200 U
	1,2,3-Trichloropropane	NS	NS	2.0 U	2.0 U	2.0 U	2.0 U	2.0 U	2.0 U	2.0 U	2.0 U	2.0 U	2.0 U	2.0 U	2.0 U	2.0 U	2.0 U	2.0 U	2.0 U	2.0 U	2.0 U	2.0 U	2.0 U	2.0 U	2.0 U	800 U	200 U
	Styrene	100	6,000	1.0 U	1.0 U	1.0 U	1.0 U	1.0 U	1.0 U	1.0 U	1.0 U	1.0 U	1.0 U	1.0 U	1.0 U	1.0 U	1.0 U	1.0 U	1.0 U	1.0 U	1.0 U	1.0 U	1.0 U	1.0 U	1.0 U	400 U	100 U
	Dichlorodifluoromethane (Freon 12)	NS	NS	2.0 U	2.0 U	2.0 U	2.0 U	2.0 U	2.0 U	2.0 U	2.0 U	2.0 U	2.0 U	2.0 U	2.0 U	2.0 U	2.0 U	2.0 U	2.0 U	2.0 U	2.0 U	2.0 U	2.0 U	2.0 U	2.0 U	800 U	200 U
	Acetone	50,000	50,000	5.0 U	5.0 U	5.0 U	5.0 U	5.0 U	5.0 U	5.0 U	5.0 U	5.0 U	5.0 U	5.0 U	5.0 U	5.0 U	5.0 U	5.0 U	5.0 U	5.0 U	5.0 U	5.0 U	5.0 U	5.0 U	5.0 U	2,000 U	500 U
	Carbon Disulfide	NS	NS	2.0 U	2.0 U	2.0 U	2.0 U	2.0 U	**2.3**	2.0 U	2.0 U	2.0 U	2.0 U	2.0 U	2.0 U	2.0 U	2.0 U	2.0 U	2.0 U	2.0 U	2.0 U	2.0 U	2.0 U	2.0 U	2.0 U	800 U	200 U
	2-Butanone (MEK)	50,000	50,000	5.0 U	5.0 U	5.0 U	5.0 U	5.0 U	5.0 U	5.0 U	5.0 U	5.0 U	5.0 U	5.0 U	5.0 U	5.0 U	5.0 U	5.0 U	5.0 U	5.0 U	5.0 U	5.0 U	5.0 U	5.0 U	5.0 U	2,000 U	500 U
	4-Methyl-2-pentanone (MIBK)	50,000	50,000	5.0 U	5.0 U	5.0 U	5.0 U	5.0 U	5.0 U	5.0 U	5.0 U	5.0 U	5.0 U	5.0 U	5.0 U	5.0 U	5.0 U	5.0 U	5.0 U	5.0 U	5.0 U	5.0 U	5.0 U	5.0 U	5.0 U	2,000 U	500 U
	2-Hexanone (MBK)	NS	NS	5.0 U	5.0 U	5.0 U	5.0 U	5.0 U	5.0 U	5.0 U	5.0 U	5.0 U	5.0 U	5.0 U	5.0 U	5.0 U	5.0 U	5.0 U	5.0 U	5.0 U	5.0 U	5.0 U	5.0 U	5.0 U	5.0 U	2,000 U	500 U
	Bromochloromethane	NS	NS	2.0 U	2.0 U	2.0 U	2.0 U	2.0 U	2.0 U	2.0 U	2.0 U	2.0 U	2.0 U	2.0 U	2.0 U	2.0 U	2.0 U	2.0 U	2.0 U	2.0 U	2.0 U	2.0 U	2.0 U	2.0 U	2.0 U	800 U	200 U
	Tetrahydrofuran	NS	NS	10 U	10 U	10 U	10 U	5.0 U	5.0 U	10 U	10 U	10 U	10 U	10 U	10 U	10 U	10 U	10 U	10 U	10 U	10 U	10 U	10 U	10 U	10 U	4,000 U	1,000 U
	2,2-Dichloropropane	NS	NS	2.0 U	2.0 U	2.0 U	2.0 U	2.0 U	2.0 U	2.0 U	2.0 U	2.0 U	2.0 U	2.0 U	2.0 U	2.0 U	2.0 U	2.0 U	2.0 U	2.0 U	2.0 U	2.0 U	2.0 U	2.0 U	2.0 U	800 U	200 U
	1,2-Dibromoethane (EDB)	2	50,000	2.0 U	2.0 U	2.0 U	2.0 U	2.0 U	2.0 U	2.0 U	2.0 U	2.0 U	2.0 U	2.0 U	2.0 U	2.0 U	2.0 U	2.0 U	2.0 U	2.0 U	2.0 U	2.0 U	2.0 U	2.0 U	2.0 U	800 U	200 U
	1,3-Dichloropropane	NS	NS	2.0 U	2.0 U	2.0 U	2.0 U	2.0 U	2.0 U	2.0 U	2.0 U	2.0 U	2.0 U	2.0 U	2.0 U	2.0 U	2.0 U	2.0 U	2.0 U	2.0 U	2.0 U	2.0 U	2.0 U	2.0 U	2.0 U	800 U	200 U
	1,1,1,2-Tetrachloroethane	10	50,000	1.0 U	1.0 U	1.0 U	1.0 U	1.0 U	1.0 U	1.0 U	1.0 U	1.0 U	1.0 U	1.0 U	1.0 U	1.0 U	1.0 U	1.0 U	1.0 U	1.0 U	1.0 U	1.0 U	1.0 U	1.0 U	1.0 U	400 U	100 U
	Bromobenzene	NS	NS	2.0 U	2.0 U	2.0 U	2.0 U	2.0 U	2.0 U	2.0 U	2.0 U	2.0 U	2.0 U	2.0 U	2.0 U	2.0 U	2.0 U	2.0 U	2.0 U	2.0 U	2.0 U	2.0 U	2.0 U	2.0 U	2.0 U	800 U	200 U
	n-Butylbenzene	4,000[1]	50,000[1]	2.0 U	2.0 U	2.0 U	2.0 U	2.0 U	2.0 U	2.0 U	2.0 U	2.0 U	2.0 U	2.0 U	2.0 U	2.0 U	2.0 U	2.0 U	2.0 U	2.0 U	2.0 U	2.0 U	2.0 U	2.0 U	2.0 U	800 U	200 U
	sec-Butylbenzene	4,000[1]	50,000[1]	2.0 U	2.0 U	2.0 U	2.0 U	2.0 U	2.0 U	2.0 U	2.0 U	2.0 U	2.0 U	2.0 U	2.0 U	2.0 U	2.0 U	2.0 U	2.0 U	2.0 U	2.0 U	2.0 U	2.0 U	2.0 U	2.0 U	800 U	200 U
	tert-Butylbenzene	4,000[1]	50,000[1]	2.0 U	2.0 U	2.0 U	2.0 U	2.0 U	2.0 U	2.0 U	2.0 U	2.0 U	2.0 U	2.0 U	2.0 U	2.0 U	2.0 U	2.0 U	2.0 U	2.0 U	2.0 U	2.0 U	2.0 U	2.0 U	2.0 U	800 U	200 U
	2-Chlorotoluene	NS	NS	2.0 U	2.0 U	2.0 U	2.0 U	2.0 U	2.0 U	2.0 U	2.0 U	2.0 U	2.0 U	2.0 U	2.0 U	2.0 U	2.0 U	2.0 U	2.0 U	2.0 U	2.0 U	2.0 U	2.0 U	2.0 U	2.0 U	800 U	200 U
	4-Chlorotoluene	NS	NS	2.0 U	2.0 U	2.0 U	2.0 U	2.0 U	2.0 U	2.0 U	2.0 U	2.0 U	2.0 U	2.0 U	2.0 U	2.0 U	2.0 U	2.0 U	2.0 U	2.0 U	2.0 U	2.0 U	2.0 U	2.0 U	2.0 U	800 U	200 U
	1,2-Dibromo-3-chloropropane (DBCP)	NS	NS	5.0 U	5.0 U	5.0 U	2.0 U	2.0 U	2.0 U	5.0 U	5.0 U	2.0 U	5.0 U	2.0 U	5.0 U	5.0 U	2.0 U	5.0 U	2.0 U	5.0 U	2.0 U	2.0 U	2.0 U	2.0 U	2.0 U	800 U	200 U
	Hexachlorobutadiene	50	3,000	0.60 U	0.60 U	0.60 U	0.60 U	0.60 U	0.60 U	0.60 U	0.60 U	0.60 U	0.60 U	0.60 U	0.60 U	0.60 U	0.60 U	0.60 U	0.60 U	0.60 U	0.60 U	0.60 U	0.60 U	0.60 U	0.60 U	240 U	60 U
	Isopropylbenzene (Cumene)	4,000[1]	50,000[1]	2.0 U	2.0 U	2.0 U	2.0 U	2.0 U	2.0 U	2.0 U	2.0 U	2.0 U	2.0 U	2.0 U	2.0 U	2.0 U	2.0 U	2.0 U	2.0 U	2.0 U	2.0 U	2.0 U	2.0 U	2.0 U	2.0 U	800 U	200 U
	p-Isopropyltoluene (p-Cymene)	4,000[1]	50,000[1]	2.0 U	2.0 U	2.0 U	2.0 U	2.0 U	2.0 U	2.0 U	2.0 U	2.0 U	2.0 U	2.0 U	2.0 U	**6.2**	**6.2**	2.0 U	2.0 U	2.0 U	2.0 U	2.0 U	2.0 U	2.0 U	2.0 U	800 U	200 U
	Naphthalene	700	20,000	5.0 U	5.0 U	5.0 U	2.0 U	2.0 U	2.0 U	5.0 U	5.0 U	5.0 U	5.0 U	2.0 U	5.0 U	5.0 U	2.0 U	5.0 U	2.0 U	5.0 U	5.0 U	2.0 U	2.0 U	5.0 U	5.0 U	2,000 U	200 U
	n-Propylbenzene	4,000[1]	50,000[1]	2.0 U	2.0 U	2.0 U	2.0 U	2.0 U	2.0 U	2.0 U	2.0 U	2.0 U	2.0 U	2.0 U	2.0 U	2.0 U	2.0 U	2.0 U	2.0 U	2.0 U	2.0 U	2.0 U	2.0 U	2.0 U	2.0 U	800 U	200 U
	1,2,3-Trichlorobenzene	NS	NS	2.0 U	2.0 U	2.0 U	2.0 U	2.0 U	2.0 U	2.0 U	2.0 U	2.0 U	2.0 U	2.0 U	2.0 U	2.0 U	2.0 U	2.0 U	2.0 U	2.0 U	2.0 U	2.0 U	2.0 U	2.0 U	2.0 U	800 U	200 U
	1,2,4-Trichlorobenzene	200	50,000	2.0 U	2.0 U	2.0 U	2.0 U	2.0 U	2.0 U	2.0 U	2.0 U	2.0 U	2.0 U	2.0 U	2.0 U	2.0 U	2.0 U	2.0 U	2.0 U	2.0 U	2.0 U	2.0 U	2.0 U	2.0 U	2.0 U	800 U	200 U
	1,3,5-Trimethylbenzene	4,000[1]	50,000[1]	2.0 U	2.0 U	2.0 U	2.0 U	2.0 U	2.0 U	2.0 U	2.0 U	2.0 U	2.0 U	2.0 U	2.0 U	2.0 U	2.0 U	2.0 U	2.0 U	2.0 U	2.0 U	2.0 U	2.0 U	2.0 U	2.0 U	800 U	200 U
	1,2,4-Trimethylbenzene	4,000[1]	50,000[1]	2.0 U	2.0 U	2.0 U	2.0 U	2.0 U	2.0 U	2.0 U	2.0 U	2.0 U	2.0 U	2.0 U	2.0 U	2.0 U	2.0 U	2.0 U	2.0 U	2.0 U	2.0 U	2.0 U	2.0 U	2.0 U	2.0 U	800 U	200 U
	Diisopropyl Ether (DIPE)	NS	NS	2.0 U	2.0 U	2.0 U	2.0 U	2.0 U	2.0 U	2.0 U	2.0 U	2.0 U	2.0 U	2.0 U	2.0 U	2.0 U	2.0 U	2.0 U	2.0 U	2.0 U	2.0 U	2.0 U	2.0 U	2.0 U	2.0 U	800 U	200 U
	tert-Butyl Ethyl Ether (TBEE)	NS	NS	2.0 U	2.0 U	2.0 U	2.0 U	2.0 U	2.0 U	2.0 U	2.0 U	2.0 U	2.0 U	2.0 U	2.0 U	2.0 U	2.0 U	2.0 U	2.0 U	2.0 U	2.0 U	2.0 U	2.0 U	2.0 U	2.0 U	800 U	200 U
	tert-Amyl Methyl Ether (TAME)	NS	NS	2.0 U	2.0 U	2.0 U	2.0 U	2.0 U	2.0 U	2.0 U	2.0 U	2.0 U	2.0 U	2.0 U	2.0 U	2.0 U	2.0 U	2.0 U	2.0 U	2.0 U	2.0 U	2.0 U	2.0 U	2.0 U	2.0 U	800 U	200 U
	1,4-Dioxane	6,000	50,000	250 U	250 U	250 U	250 U	250 U	250 U	250 U	250 U	250 U	250 U	250 U	250 U	250 U	250 U	250 U	250 U	250 U	250 U	250 U	250 U	250 U	250 U	100,000 U	25,000 U
	Diethyl Ether	NS	NS	2.0 U	2.0 U	2.0 U	2.0 U	2.0 U	2.0 U	2.0 U	2.0 U	2.0 U	2.0 U	2.0 U	2.0 U	2.0 U	2.0 U	2.0 U	2.0 U	2.0 U	2.0 U	2.0 U	2.0 U	2.0 U	2.0 U	800 U	200 U

Table 2
Summary of Analytical Results for Groundwater Samples --
2008 through 2015
New Bedford High School
New Bedford, Massachusetts

Analysis	Analyte		Sample ID:	MW-17	MW-18					MW-19	MW-20		MW-21		MW-22			MW-23		MW-24				MW-25	MW-26	MW-27	
		Filter Size (micron)^:		N/A	N/A	N/A	N/A	N/A	N/A	N/A	N/A	N/A	N/A	N/A	N/A	N/A	N/A	N/A	N/A	N/A	N/A	N/A	N/A	N/A	N/A	N/A	N/A
			Sample Date:	2/18/2010	2/18/2010	4/9/2010	9/13/2010	4/28/2011	4/10/2012	2/18/2010	4/8/2010	9/10/2010	4/8/2010	9/13/2010	4/8/2010	4/8/2010	9/13/2010	4/8/2010	9/13/2010	4/8/2010	9/10/2010	10/21/2010	10/21/2010	9/8/2010	9/8/2010	9/9/2010	10/21/2010
		GW-2	GW-3													Field Dup							Field Dup				
PAHs																											
(ug/L)	Acenaphthene	NS	10,000	NA	NA	NA	NA	NA	NA	NA	NA	NA	NA	NA	NA	NA	NA	NA	NA	NA	NA	NA	NA	NA	NA	NA	NA
	Acenaphthylene	10,000	40	NA	NA	NA	NA	NA	NA	NA	NA	NA	NA	NA	NA	NA	NA	NA	NA	NA	NA	NA	NA	NA	NA	NA	NA
	Anthracene	NS	30	NA	NA	NA	NA	NA	NA	NA	NA	NA	NA	NA	NA	NA	NA	NA	NA	NA	NA	NA	NA	NA	NA	NA	NA
	Benzo(a)anthracene	NS	1,000	NA	NA	NA	NA	NA	NA	NA	NA	NA	NA	NA	NA	NA	NA	NA	NA	NA	NA	NA	NA	NA	NA	NA	NA
	Benzo(a)pyrene	NS	500	NA	NA	NA	NA	NA	NA	NA	NA	NA	NA	NA	NA	NA	NA	NA	NA	NA	NA	NA	NA	NA	NA	NA	NA
	Benzo(b)fluoranthene	NS	400	NA	NA	NA	NA	NA	NA	NA	NA	NA	NA	NA	NA	NA	NA	NA	NA	NA	NA	NA	NA	NA	NA	NA	NA
	Benzo(g,h,i)perylene	NS	20	NA	NA	NA	NA	NA	NA	NA	NA	NA	NA	NA	NA	NA	NA	NA	NA	NA	NA	NA	NA	NA	NA	NA	NA
	Benzo(k)fluoranthene	NS	100	NA	NA	NA	NA	NA	NA	NA	NA	NA	NA	NA	NA	NA	NA	NA	NA	NA	NA	NA	NA	NA	NA	NA	NA
	Chrysene	NS	70	NA	NA	NA	NA	NA	NA	NA	NA	NA	NA	NA	NA	NA	NA	NA	NA	NA	NA	NA	NA	NA	NA	NA	NA
	Dibenz(a,h)anthracene	NS	40	NA	NA	NA	NA	NA	NA	NA	NA	NA	NA	NA	NA	NA	NA	NA	NA	NA	NA	NA	NA	NA	NA	NA	NA
	Fluoranthene	NS	200	NA	NA	NA	NA	NA	NA	NA	NA	NA	NA	NA	NA	NA	NA	NA	NA	NA	NA	NA	NA	NA	NA	NA	NA
	Fluorene	NS	40	NA	NA	NA	NA	NA	NA	NA	NA	NA	NA	NA	NA	NA	NA	NA	NA	NA	NA	NA	NA	NA	NA	NA	NA
	Indeno(1,2,3-cd)pyrene	NS	100	NA	NA	NA	NA	NA	NA	NA	NA	NA	NA	NA	NA	NA	NA	NA	NA	NA	NA	NA	NA	NA	NA	NA	NA
	2-Methylnaphthalene	2,000	20,000	NA	NA	NA	NA	NA	NA	NA	NA	NA	NA	NA	NA	NA	NA	NA	NA	NA	NA	NA	NA	NA	NA	NA	NA
	Naphthalene	700	20,000	NA	NA	NA	NA	NA	NA	NA	NA	NA	NA	NA	NA	NA	NA	NA	NA	NA	NA	NA	NA	NA	NA	NA	NA
	Phenanthrene	NS	10,000	NA	NA	NA	NA	NA	NA	NA	NA	NA	NA	NA	NA	NA	NA	NA	NA	NA	NA	NA	NA	NA	NA	NA	NA
	Pyrene	NS	20	NA	NA	NA	NA	NA	NA	NA	NA	NA	NA	NA	NA	NA	NA	NA	NA	NA	NA	NA	NA	NA	NA	NA	NA
PCBs																											
(ug/L)	Aroclor 1016	NS	NS	NA	NA	NA	NA	NA	0.0500 U	NA	NA	NA	NA	NA	NA	NA	NA	NA	NA	NA	NA	NA	NA	NA	NA	NA	NA
	Aroclor 1221	NS	NS	NA	NA	NA	NA	NA	0.0500 U	NA	NA	NA	NA	NA	NA	NA	NA	NA	NA	NA	NA	NA	NA	NA	NA	NA	NA
	Aroclor 1232	NS	NS	NA	NA	NA	NA	NA	0.0500 U	NA	NA	NA	NA	NA	NA	NA	NA	NA	NA	NA	NA	NA	NA	NA	NA	NA	NA
	Aroclor 1242	NS	NS	NA	NA	NA	NA	NA	0.0500 U	NA	NA	NA	NA	NA	NA	NA	NA	NA	NA	NA	NA	NA	NA	NA	NA	NA	NA
	Aroclor 1248	NS	NS	NA	NA	NA	NA	NA	0.0500 U	NA	NA	NA	NA	NA	NA	NA	NA	NA	NA	NA	NA	NA	NA	NA	NA	NA	NA
	Aroclor 1254	NS	NS	NA	NA	NA	NA	NA	0.0500 U	NA	NA	NA	NA	NA	NA	NA	NA	NA	NA	NA	NA	NA	NA	NA	NA	NA	NA
	Aroclor 1260	NS	NS	NA	NA	NA	NA	NA	0.0500 U	NA	NA	NA	NA	NA	NA	NA	NA	NA	NA	NA	NA	NA	NA	NA	NA	NA	NA
	Aroclor 1262	NS	NS	NA	NA	NA	NA	NA	NA	NA	NA	NA	NA	NA	NA	NA	NA	NA	NA	NA	NA	NA	NA	NA	NA	NA	NA
	Aroclor 1268	NS	NS	NA	NA	NA	NA	NA	NA	NA	NA	NA	NA	NA	NA	NA	NA	NA	NA	NA	NA	NA	NA	NA	NA	NA	NA
	Total PCBs	5	10	NA	NA	NA	NA	NA	0.0500 U	NA	NA	NA	NA	NA	NA	NA	NA	NA	NA	NA	NA	NA	NA	NA	NA	NA	NA
Total Petroleum Hydrocarbons																											
(ug/L)	Total Petroleum Hydrocarbons (C9-C44)	5,000	5,000	NA	NA	NA	NA	NA	NA	NA	NA	NA	NA	NA	NA	NA	NA	NA	NA	NA	NA	NA	NA	NA	NA	NA	NA
Metals, total																											
(ug/L)	Antimony	NS	8,000	NA	NA	NA	NA	NA	NA	NA	NA	NA	NA	NA	NA	NA	NA	NA	NA	NA	NA	NA	NA	NA	NA	NA	NA
	Arsenic	NS	900	NA	NA	NA	NA	NA	NA	NA	NA	NA	NA	NA	NA	NA	NA	NA	NA	NA	NA	NA	NA	NA	NA	NA	NA
	Barium	NS	50,000	NA	NA	NA	NA	NA	NA	NA	NA	NA	NA	NA	NA	NA	NA	NA	NA	NA	NA	NA	NA	NA	NA	NA	NA
	Beryllium	NS	200	NA	NA	NA	NA	NA	NA	NA	NA	NA	NA	NA	NA	NA	NA	NA	NA	NA	NA	NA	NA	NA	NA	NA	NA
	Cadmium	NS	4	NA	NA	NA	NA	NA	NA	NA	NA	NA	NA	NA	NA	NA	NA	NA	NA	NA	NA	NA	NA	NA	NA	NA	NA
	Chromium	NS	300	NA	NA	NA	NA	NA	NA	NA	NA	NA	NA	NA	NA	NA	NA	NA	NA	NA	NA	NA	NA	NA	NA	NA	NA
	Lead	NS	10	NA	NA	NA	NA	NA	NA	NA	NA	NA	NA	NA	NA	NA	NA	NA	NA	NA	NA	NA	NA	NA	NA	NA	NA
	Mercury	NS	20	NA	NA	NA	NA	NA	NA	NA	NA	NA	NA	NA	NA	NA	NA	NA	NA	NA	NA	NA	NA	NA	NA	NA	NA
	Nickel	NS	200	NA	NA	NA	NA	NA	NA	NA	NA	NA	NA	NA	NA	NA	NA	NA	NA	NA	NA	NA	NA	NA	NA	NA	NA
	Selenium	NS	100	NA	NA	NA	NA	NA	NA	NA	NA	NA	NA	NA	NA	NA	NA	NA	NA	NA	NA	NA	NA	NA	NA	NA	NA
	Silver	NS	7	NA	NA	NA	NA	NA	NA	NA	NA	NA	NA	NA	NA	NA	NA	NA	NA	NA	NA	NA	NA	NA	NA	NA	NA
	Thallium	NS	3,000	NA	NA	NA	NA	NA	NA	NA	NA	NA	NA	NA	NA	NA	NA	NA	NA	NA	NA	NA	NA	NA	NA	NA	NA
	Vanadium	NS	4,000	NA	NA	NA	NA	NA	NA	NA	NA	NA	NA	NA	NA	NA	NA	NA	NA	NA	NA	NA	NA	NA	NA	NA	NA
	Zinc	NS	900	NA	NA	NA	NA	NA	NA	NA	NA	NA	NA	NA	NA	NA	NA	NA	NA	NA	NA	NA	NA	NA	NA	NA	NA
Metals, dissolved																											
(ug/L)	Antimony	NS	8,000	NA	NA	NA	NA	NA	NA	NA	NA	NA	NA	NA	NA	NA	NA	NA	NA	NA	NA	NA	NA	NA	NA	NA	NA
	Arsenic	NS	900	NA	NA	NA	NA	NA	NA	NA	NA	NA	NA	NA	NA	NA	NA	NA	NA	NA	NA	NA	NA	NA	NA	NA	NA
	Barium	NS	50,000	NA	NA	NA	NA	NA	NA	NA	NA	NA	NA	NA	NA	NA	NA	NA	NA	NA	NA	NA	NA	NA	NA	NA	NA
	Beryllium	NS	200	NA	NA	NA	NA	NA	NA	NA	NA	NA	NA	NA	NA	NA	NA	NA	NA	NA	NA	NA	NA	NA	NA	NA	NA
	Cadmium	NS	4	NA	NA	NA	NA	NA	NA	NA	NA	NA	NA	NA	NA	NA	NA	NA	NA	NA	NA	NA	NA	NA	NA	NA	NA
	Chromium	NS	300	NA	NA	NA	NA	NA	NA	NA	NA	NA	NA	NA	NA	NA	NA	NA	NA	NA	NA	NA	NA	NA	NA	NA	NA
	Lead	NS	10	NA	NA	NA	NA	NA	NA	NA	NA	NA	NA	NA	NA	NA	NA	NA	NA	NA	NA	NA	NA	NA	NA	NA	NA
	Mercury	NS	20	NA	NA	NA	NA	NA	NA	NA	NA	NA	NA	NA	NA	NA	NA	NA	NA	NA	NA	NA	NA	NA	NA	NA	NA
	Nickel	NS	200	NA	NA	NA	NA	NA	NA	NA	NA	NA	NA	NA	NA	NA	NA	NA	NA	NA	NA	NA	NA	NA	NA	NA	NA
	Selenium	NS	100	NA	NA	NA	NA	NA	NA	NA	NA	NA	NA	NA	NA	NA	NA	NA	NA	NA	NA	NA	NA	NA	NA	NA	NA
	Silver	NS	7	NA	NA	NA	NA	NA	NA	NA	NA	NA	NA	NA	NA	NA	NA	NA	NA	NA	NA	NA	NA	NA	NA	NA	NA
	Thallium	NS	3,000	NA	NA	NA	NA	NA	NA	NA	NA	NA	NA	NA	NA	NA	NA	NA	NA	NA	NA	NA	NA	NA	NA	NA	NA
	Vanadium	NS	4,000	NA	NA	NA	NA	NA	NA	NA	NA	NA	NA	NA	NA	NA	NA	NA	NA	NA	NA	NA	NA	NA	NA	NA	NA
	Zinc	NS	900	NA	NA	NA	NA	NA	NA	NA	NA	NA	NA	NA	NA	NA	NA	NA	NA	NA	NA	NA	NA	NA	NA	NA	NA
General Chemistry																											
(ug/L)	Nitrogen, Nitrate	NS	NS	NA	NA	NA	NA	NA	NA	NA	NA	NA	NA	NA	NA	NA	NA	NA	NA	NA	NA	NA	NA	NA	NA	**1,000**	NA
	Sulfate	NS	NS	NA	NA	NA	NA	NA	NA	NA	NA	NA	NA	NA	NA	NA	NA	NA	NA	NA	NA	NA	NA	NA	NA	**21,000**	NA
	Total Organic Carbon	NS	NS	NA	NA	NA	NA	NA	NA	NA	NA	NA	NA	NA	NA	NA	NA	NA	NA	NA	NA	NA	NA	NA	NA	**8,700**	NA

Notes:
ug/L - micrograms per liter.
B - Compound detected in associated method blank
J - Estimated value.
NA - Sample not analyzed for the listed analyte.
N/A - Not applicable.
NS - No MassDEP standards exist for this compound.
U - Compound was not detected at specified quantitation limit.
Values in **Bold** indicate the compound was detected.
VOCs - Volatile Organic Compounds.
PAHs - Polynuclear Aromatic Hydrocarbons.
PCBs - Polychlorinated Biphenyls.
(1) - MassDEP Method 1 standards for C9-C10 aromatic hydrocarbons used.
(2) - MassDEP Method 1 standards for 1,3-Dichloropropene used.
(3) - criteria applicable to xylene (total), the sum of the xylene isomers.
^ - 0.45 micron filtration done in field; 0.20 and 2.0 micron filtration performed in lab.
* - Sample collected on 4/10/2012 for PCB analysis was broken and was recollected on 4/18/2012.
** - Lab filtered sample using a 2.0 micron filter and then filtered a second time using a 0.20 micron fil

Table 2
Summary of Analytical Results for Groundwater Samples --
2008 through 2015
New Bedford High School
New Bedford, Massachusetts

Analysis	Analyte	Sample ID:		MW-27D													MW-27R													
		Filter Size (micron)^:		N/A	N/A	N/A	N/A	N/A	N/A	N/A	N/A	N/A	N/A	N/A	N/A	N/A	N/A	N/A	N/A	N/A	N/A	N/A	N/A	N/A	N/A	N/A	N/A	N/A	N/A	N/A
		Sample Date:		11/18/2010	3/8/2011	3/25/2011	4/8/2011	4/29/2011	4/29/2011	7/27/2011	8/25/2011	2/27/2012	2/27/2012	4/11/2012	4/11/2012	12/13/2012	3/8/2011	3/8/2011	3/25/2011	4/8/2011	4/29/2011	7/27/2011	7/27/2011	8/2/2011	8/25/2011	8/25/2011	2/27/2012	2/27/2012	9/18/2012	10/18/2012
		GW-2	GW-3						Field Dup				Field Dup		Field Dup			Field Dup						Field Dup			Field Dup		Field Dup		
VOCs (ug/L)	Methylene Chloride	2,000	50,000	2.0 U	2.0 U	2.0 U	2.0 U	2.0 U	2.0 U	2.0 U	2.0 U	4.0 U	4.0 U	2.0 U	2.0 U	2.0 U	4,000 U	4,000 U	4,000 U	2,000 U	1,000 U	400 U	200 U	500 U	400 U	400 U	200 U	NA	4.0 U	2.0 U
	1,1-Dichloroethane	2,000	20,000	1.0 U	1.0 U	1.0 U	1.0 U	1.0 U	1.0 U	1.0 U	1.0 U	2.0 U	2.0 U	1.0 U	1.0 U	1.0 U	2,000 U	2,000 U	2,000 U	1,000 U	500 U	200 U	100 U	250 U	200 U	200 U	100 U	NA	2.0 U	1.0 U
	Chloroform	50	20,000	1.0 U	1.0 U	1.0 U	1.0 U	1.0 U	1.0 U	1.0 U	1.0 U	2.0 U	2.0 U	1.0 U	1.0 U	1.0 U	2,000 U	2,000 U	2,000 U	1,000 U	500 U	200 U	100 U	250 U	200 U	200 U	100 U	NA	2.0 U	1.0 U
	Carbon Tetrachloride	2	5,000	1.0 U	1.0 U	1.0 U	1.0 U	1.0 U	1.0 U	1.0 U	1.0 U	2.0 U	2.0 U	1.0 U	1.0 U	1.0 U	2,000 U	2,000 U	2,000 U	1,000 U	500 U	200 U	100 U	250 U	200 U	200 U	100 U	NA	2.0 U	1.0 U
	1,2-Dichloropropane	3	50,000	1.0 U	1.0 U	1.0 U	1.0 U	1.0 U	1.0 U	1.0 U	1.0 U	2.0 U	2.0 U	1.0 U	1.0 U	1.0 U	2,000 U	2,000 U	2,000 U	1,000 U	500 U	200 U	100 U	250 U	200 U	200 U	100 U	NA	2.0 U	1.0 U
	Chlorodibromomethane	20	50,000	1.0 U	1.0 U	1.0 U	1.0 U	1.0 U	1.0 U	1.0 U	1.0 U	2.0 U	2.0 U	1.0 U	1.0 U	1.0 U	2,000 U	2,000 U	2,000 U	1,000 U	500 U	200 U	100 U	250 U	200 U	200 U	100 U	NA	2.0 U	1.0 U
	1,1,2-Trichloroethane	900	50,000	1.0 U	1.0 U	1.0 U	1.0 U	1.0 U	1.0 U	1.0 U	1.0 U	2.0 U	2.0 U	1.0 U	1.0 U	1.0 U	2,000 U	2,000 U	2,000 U	1,000 U	500 U	200 U	100 U	250 U	200 U	200 U	100 U	NA	2.0 U	1.0 U
	Tetrachloroethylene	50	30,000	1.0 U	1.0 U	1.0 U	1.0 U	1.0 U	1.0 U	1.0 U	1.0 U	2.0 U	2.0 U	1.0 U	1.0 U	1.0 U	2,000 U	2,000 U	2,000 U	1,000 U	500 U	200 U	100 U	250 U	200 U	200 U	100 U	NA	2.0 U	1.0 U
	Chlorobenzene	200	1,000	1.0 U	1.0 U	1.0 U	1.0 U	1.0 U	1.0 U	1.0 U	1.0 U	2.0 U	2.0 U	1.0 U	1.0 U	1.0 U	2,000 U	2,000 U	2,000 U	1,000 U	500 U	200 U	100 U	250 U	200 U	200 U	100 U	NA	**2.7**	**1.2**
	Trichlorofluoromethane (Freon 11)	NS	NS	2.0 U	2.0 U	2.0 U	2.0 U	2.0 U	2.0 U	2.0 U	2.0 U	4.0 U	4.0 U	2.0 U	2.0 U	2.0 U	4,000 U	4,000 U	4,000 U	2,000 U	1,000 U	400 U	200 U	500 U	400 U	400 U	200 U	NA	4.0 U	2.0 U
	1,2-Dichloroethane	5	20,000	1.0 U	1.0 U	1.0 U	1.0 U	1.0 U	1.0 U	1.0 U	1.0 U	2.0 U	2.0 U	1.0 U	1.0 U	1.0 U	2,000 U	2,000 U	2,000 U	1,000 U	500 U	200 U	100 U	250 U	200 U	200 U	100 U	NA	2.0 U	1.0 U
	1,1,1-Trichloroethane	4,000	20,000	1.0 U	1.0 U	1.0 U	1.0 U	1.0 U	1.0 U	1.0 U	1.0 U	2.0 U	2.0 U	1.0 U	1.0 U	1.0 U	2,000 U	2,000 U	2,000 U	1,000 U	500 U	200 U	100 U	250 U	200 U	200 U	100 U	NA	2.0 U	1.0 U
	Bromodichloromethane	6	50,000	1.0 U	1.0 U	1.0 U	1.0 U	1.0 U	1.0 U	1.0 U	1.0 U	2.0 U	2.0 U	1.0 U	1.0 U	1.0 U	2,000 U	2,000 U	2,000 U	1,000 U	500 U	200 U	100 U	250 U	200 U	200 U	100 U	NA	2.0 U	1.0 U
	trans-1,3-Dichloropropene	10[2]	200[2]	0.50 U	0.50 U	0.50 U	0.50 U	0.50 U	0.50 U	0.50 U	0.50 U	1.0 U	1.0 U	0.50 U	0.50 U	0.50 U	1,000 U	1,000 U	1,000 U	500 U	250 U	100 U	50 U	120 U	100 U	100 U	50 U	NA	1.0 U	0.50 U
	cis-1,3-Dichloropropene	10[2]	200[2]	0.50 U	0.50 U	0.50 U	0.50 U	0.50 U	0.50 U	0.50 U	0.50 U	1.0 U	1.0 U	0.50 U	0.50 U	0.50 U	1,000 U	1,000 U	1,000 U	500 U	250 U	100 U	50 U	120 U	100 U	100 U	50 U	NA	1.0 U	0.50 U
	1,3-Dichloropropene, Total	10	200	NA	NA	NA	NA	NA	NA	NA	NA	NA	NA	NA	NA	NA	NA	NA	NA	NA	NA	NA	NA	NA	NA	NA	NA	NA	NA	NA
	1,1-Dichloropropene	NS	NS	2.0 U	2.0 U	2.0 U	2.0 U	2.0 U	2.0 U	2.0 U	2.0 U	4.0 U	4.0 U	2.0 U	2.0 U	2.0 U	4,000 U	4,000 U	4,000 U	2,000 U	1,000 U	400 U	200 U	500 U	400 U	400 U	200 U	NA	4.0 U	2.0 U
	Bromoform	700	50,000	2.0 U	2.0 U	2.0 U	2.0 U	2.0 U	2.0 U	2.0 U	2.0 U	4.0 U	4.0 U	2.0 U	2.0 U	2.0 U	4,000 U	4,000 U	4,000 U	2,000 U	1,000 U	400 U	200 U	500 U	400 U	400 U	200 U	NA	4.0 U	2.0 U
	1,1,2,2-Tetrachloroethane	9	50,000	1.0 U	1.0 U	1.0 U	1.0 U	1.0 U	1.0 U	1.0 U	1.0 U	2.0 U	2.0 U	1.0 U	1.0 U	1.0 U	2,000 U	2,000 U	2,000 U	1,000 U	500 U	200 U	100 U	250 U	200 U	200 U	100 U	NA	2.0 U	1.0 U
	Benzene	1,000	10,000	1.0 U	1.0 U	1.0 U	1.0 U	1.0 U	1.0 U	0.50 U	0.50 U	1.0 U	1.0 U	0.50 U	0.50 U	0.50 U	2,000 U	2,000 U	2,000 U	1,000 U	500 U	100 U	50 U	120 U	100 U	100 U	50 U	NA	1.0 U	0.50 U
	Toluene	50,000	40,000	1.0 U	1.0 U	1.0 U	1.0 U	1.0 U	1.0 U	1.0 U	1.0 U	2.0 U	2.0 U	1.0 U	1.0 U	1.0 U	2,000 U	2,000 U	2,000 U	1,000 U	500 U	200 U	100 U	250 U	200 U	200 U	100 U	NA	2.0 U	1.0 U
	Ethylbenzene	20,000	5,000	1.0 U	1.0 U	1.0 U	1.0 U	1.0 U	1.0 U	1.0 U	1.0 U	2.0 U	2.0 U	1.0 U	1.0 U	1.0 U	2,000 U	2,000 U	2,000 U	1,000 U	500 U	200 U	100 U	250 U	200 U	200 U	100 U	NA	**7.7**	**3.1**
	Chloromethane	NS	NS	2.0 U	2.0 U	2.0 U	2.0 U	2.0 U	2.0 U	2.0 U	2.0 U	4.0 U	4.0 U	2.0 U	2.0 U	2.0 U	4,000 U	4,000 U	4,000 U	2,000 U	1,000 U	400 U	200 U	500 U	400 U	400 U	200 U	NA	4.0 U	2.0 U
	Bromomethane	7	800	2.0 U	2.0 U	2.0 U	2.0 U	2.0 U	2.0 U	2.0 U	2.0 U	4.0 U	4.0 U	2.0 U	2.0 U	2.0 U	4,000 U	4,000 U	4,000 U	2,000 U	1,000 U	400 U	200 U	500 U	400 U	400 U	200 U	NA	4.0 U	2.0 U
	Vinyl Chloride	2	50,000	1.0 U	1.0 U	1.0 U	1.0 U	1.0 U	1.0 U	**35**	**9.8**	**26**	**28**	1.0 U	1.0 U	1.0 U	2,000 U	2,000 U	2,000 U	1,000 U	500 U	**1,900**	**1,300**	**510**	**1,000**	**990**	**1,800**	NA	**24**	**4.1**
	Chloroethane	NS	NS	2.0 U	2.0 U	2.0 U	2.0 U	2.0 U	2.0 U	2.0 U	2.0 U	4.0 U	4.0 U	2.0 U	2.0 U	2.0 U	4,000 U	4,000 U	4,000 U	2,000 U	1,000 U	400 U	200 U	500 U	400 U	400 U	200 U	NA	4.0 U	2.0 U
	1,1-Dichloroethylene	80	30,000	1.0 U	1.0 U	1.0 U	1.0 U	1.0 U	1.0 U	1.0 U	1.0 U	2.0 U	2.0 U	1.0 U	1.0 U	1.0 U	2,000 U	2,000 U	2,000 U	1,000 U	500 U	200 U	100 U	250 U	200 U	200 U	100 U	NA	2.0 U	1.0 U
	trans-1,2-Dichloroethylene	80	50,000	1.0 U	1.0 U	1.0 U	1.0 U	1.0 U	1.0 U	**7.5**	**2.2**	**22**	**23**	1.0 U	1.0 U	1.0 U	**2,500**	**2,500**	**2,600**	**1,900**	**1,400**	**2,200**	**1,700**	**940**	**1,700**	**1,700**	**1,700**	NA	**23**	**6.0**
	Trichloroethylene	5	5,000	1.0 U	**1.4**	**0.71 J**	**1.7**	**3.8**	**3.8**	**15**	**4.8**	**2.9**	**3.9**	1.0 U	1.0 U	1.0 U	**210,000**	**180,000**	**410,000**	**130,000**	**38,000**	**16,000**	**13,000**	**23,000**	**27,000**	**28,000**	**4,300**	NA	**31**	**6.9**
	1,2-Dichlorobenzene	8,000	2,000	1.0 U	1.0 U	1.0 U	1.0 U	1.0 U	1.0 U	1.0 U	1.0 U	2.0 U	2.0 U	1.0 U	1.0 U	1.0 U	2,000 U	2,000 U	2,000 U	1,000 U	500 U	200 U	100 U	250 U	200 U	200 U	100 U	NA	**4.9**	**3.0**
	1,3-Dichlorobenzene	6,000	50,000	1.0 U	1.0 U	1.0 U	1.0 U	1.0 U	1.0 U	1.0 U	1.0 U	2.0 U	2.0 U	1.0 U	1.0 U	1.0 U	2,000 U	2,000 U	2,000 U	1,000 U	500 U	200 U	100 U	250 U	200 U	200 U	100 U	NA	**14**	**6.8**
	1,4-Dichlorobenzene	60	8,000	1.0 U	1.0 U	1.0 U	1.0 U	1.0 U	1.0 U	**3.0**	**1.3**	2.0 U	2.0 U	1.0 U	1.0 U	1.0 U	2,000 U	2,000 U	2,000 U	1,000 U	500 U	200 U	100 U	250 U	200 U	200 U	100 U	NA	**67**	**38**
	Methyl tert-Butyl Ether (MTBE)	50,000	50,000	2.0 U	2.0 U	2.0 U	2.0 U	2.0 U	2.0 U	2.0 U	2.0 U	4.0 U	4.0 U	2.0 U	2.0 U	2.0 U	4,000 U	4,000 U	4,000 U	2,000 U	1,000 U	400 U	200 U	500 U	400 U	400 U	200 U	NA	4.0 U	2.0 U
	m+p Xylene	3,000[3]	5,000[3]	2.0 U	2.0 U	2.0 U	2.0 U	2.0 U	2.0 U	2.0 U	2.0 U	4.0 U	4.0 U	2.0 U	2.0 U	2.0 U	4,000 U	4,000 U	4,000 U	2,000 U	1,000 U	400 U	200 U	500 U	400 U	400 U	200 U	NA	4.0 U	2.0 U
	o-Xylene	3,000[3]	5,000[3]	1.0 U	1.0 U	1.0 U	1.0 U	1.0 U	1.0 U	1.0 U	1.0 U	2.0 U	2.0 U	1.0 U	1.0 U	1.0 U	2,000 U	2,000 U	2,000 U	1,000 U	500 U	200 U	100 U	250 U	200 U	200 U	100 U	NA	2.0 U	1.0 U
	Xylene (Total)	3,000	5,000	2.0 U	2.0 U	2.0 U	2.0 U	2.0 U	2.0 U	2.0 U	2.0 U	4.0 U	4.0 U	2.0 U	2.0 U	2.0 U	4,000 U	4,000 U	4,000 U	2,000 U	1,000 U	400 U	200 U	500 U	400 U	400 U	200 U	NA	4.0 U	2.0 U
	cis-1,2-Dichloroethylene	20	50,000	1.0 U	1.0 U	1.0 U	1.0 U	1.0 U	1.0 U	**45**	**12**	**110**	**120**	1.0 U	1.0 U	1.0 U	**11,000**	**12,000**	**9,500**	**7,400**	**4,600**	**14,000**	**11,000**	**5,400**	**22,000**	**22,000**	**8,500**	NA	**120**	**35**
	1,2-Dichloroethene (total)	NS	NS	NA	NA	NA	NA	NA	NA	NA	NA	NA	NA	NA	NA	NA	NA	NA	NA	NA	NA	NA	NA	NA	NA	NA	NA	NA	NA	NA
	Dibromomethane	NS	NS	2.0 U	2.0 U	2.0 U	2.0 U	2.0 U	2.0 U	2.0 U	2.0 U	4.0 U	4.0 U	2.0 U	2.0 U	2.0 U	4,000 U	4,000 U	4,000 U	2,000 U	1,000 U	400 U	200 U	500 U	400 U	400 U	200 U	NA	4.0 U	2.0 U
	1,2,3-Trichloropropane	NS	NS	2.0 U	2.0 U	2.0 U	2.0 U	2.0 U	2.0 U	2.0 U	2.0 U	4.0 U	4.0 U	2.0 U	2.0 U	2.0 U	4,000 U	4,000 U	4,000 U	2,000 U	1,000 U	400 U	200 U	500 U	400 U	400 U	200 U	NA	4.0 U	2.0 U
	Styrene	100	6,000	1.0 U	1.0 U	1.0 U	1.0 U	1.0 U	1.0 U	1.0 U	1.0 U	2.0 U	2.0 U	1.0 U	1.0 U	1.0 U	2,000 U	2,000 U	2,000 U	1,000 U	500 U	200 U	100 U	250 U	200 U	200 U	100 U	NA	2.0 U	1.0 U
	Dichlorodifluoromethane (Freon 12)	NS	NS	2.0 U	2.0 U	2.0 U	2.0 U	2.0 U	2.0 U	2.0 U	2.0 U	4.0 U	4.0 U	2.0 U	2.0 U	2.0 U	4,000 U	4,000 U	4,000 U	2,000 U	1,000 U	400 U	200 U	500 U	400 U	400 U	200 U	NA	4.0 U	2.0 U
	Acetone	50,000	50,000	5.0 U	5.0 U	5.0 U	5.0 U	5.0 U	5.0 U	5.0 U	5.0 U	10.0 U	10.0 U	5.0 U	5.0 U	5.0 U	10,000 U	10,000 U	10,000 U	5,000 U	2,500 U	1,000 U	500 U	1,200 U	1,000 U	1,000 U	500 U	NA	10 U	**77**
	Carbon Disulfide	NS	NS	2.0 U	2.0 U	2.0 U	2.0 U	2.0 U	2.0 U	2.0 U	2.0 U	4.0 U	4.0 U	2.0 U	2.0 U	2.0 U	4,000 U	4,000 U	4,000 U	2,000 U	1,000 U	400 U	200 U	500 U	400 U	400 U	200 U	NA	4.0 U	2.0 U
	2-Butanone (MEK)	50,000	50,000	5.0 U	5.0 U	5.0 U	5.0 U	5.0 U	5.0 U	5.0 U	5.0 U	10.0 U	10.0 U	5.0 U	5.0 U	5.0 U	10,000 U	10,000 U	10,000 U	5,000 U	2,500 U	1,000 U	500 U	1,200 U	1,000 U	1,000 U	500 U	NA	10 U	5.0 U
	4-Methyl-2-pentanone (MIBK)	50,000	50,000	5.0 U	5.0 U	5.0 U	5.0 U	5.0 U	5.0 U	5.0 U	5.0 U	10.0 U	10.0 U	5.0 U	5.0 U	5.0 U	10,000 U	10,000 U	10,000 U	5,000 U	2,500 U	1,000 U	500 U	1,200 U	1,000 U	1,000 U	500 U	NA	10 U	5.0 U
	2-Hexanone (MBK)	NS	NS	5.0 U	5.0 U	5.0 U	5.0 U	5.0 U	5.0 U	5.0 U	5.0 U	10.0 U	10.0 U	5.0 U	5.0 U	5.0 U	10,000 U	10,000 U	10,000 U	5,000 U	2,500 U	1,000 U	500 U	1,200 U	1,000 U	1,000 U	500 U	NA	10 U	5.0 U
	Bromochloromethane	NS	NS	2.0 U	2.0 U	2.0 U	2.0 U	2.0 U	2.0 U	2.0 U	2.0 U	4.0 U	4.0 U	2.0 U	2.0 U	2.0 U	4,000 U	4,000 U	4,000 U	2,000 U	1,000 U	400 U	200 U	500 U	400 U	400 U	200 U	NA	4.0 U	2.0 U
	Tetrahydrofuran	NS	NS	10 U	5.0 U	5.0 U	5.0 U	5.0 U	5.0 U	5.0 U	5.0 U	10.0 U	10.0 U	5.0 U	5.0 U	5.0 U	10,000 U	10,000 U	10,000 U	5,000 U	2,500 U	1,000 U	500 U	1,200 U	1,000 U	1,000 U	500 U	NA	10 U	5.0 U
	2,2-Dichloropropane	NS	NS	2.0 U	2.0 U	2.0 U	2.0 U	2.0 U	2.0 U	2.0 U	2.0 U	4.0 U	4.0 U	2.0 U	2.0 U	2.0 U	4,000 U	4,000 U	4,000 U	2,000 U	1,000 U	400 U	200 U	500 U	400 U	400 U	200 U	NA	4.0 U	2.0 U
	1,2-Dibromoethane (EDB)	2	50,000	2.0 U	2.0 U	2.0 U	2.0 U	2.0 U	2.0 U	2.0 U	2.0 U	4.0 U	4.0 U	2.0 U	2.0 U	2.0 U	4,000 U	4,000 U	4,000 U	2,000 U	1,000 U	400 U	200 U	500 U	400 U	400 U	200 U	NA	4.0 U	2.0 U
	1,3-Dichloropropane	NS	NS	2.0 U	2.0 U	2.0 U	2.0 U	2.0 U	2.0 U	2.0 U	2.0 U	4.0 U	4.0 U	2.0 U	2.0 U	2.0 U	4,000 U	4,000 U	4,000 U	2,000 U	1,000 U	400 U	200 U	500 U	400 U	400 U	200 U	NA	4.0 U	2.0 U
	1,1,1,2-Tetrachloroethane	10	50,000	1.0 U	1.0 U	1.0 U	1.0 U	1.0 U	1.0 U	1.0 U	1.0 U	2.0 U	2.0 U	1.0 U	1.0 U	1.0 U	2,000 U	2,000 U	2,000 U	1,000 U	500 U	200 U	100 U	250 U	200 U	200 U	100 U	NA	2.0 U	1.0 U
	Bromobenzene	NS	NS	2.0 U	2.0 U	2.0 U	2.0 U	2.0 U	2.0 U	2.0 U	2.0 U	4.0 U	4.0 U	2.0 U	2.0 U	2.0 U	4,000 U	4,000 U	4,000 U	2,000 U	1,000 U	400 U	200 U	500 U	400 U	400 U	200 U	NA	4.0 U	2.0 U
	n-Butylbenzene	4,000[1]	50,000[1]	2.0 U	2.0 U	2.0 U	2.0 U	2.0 U	2.0 U	2.0 U	2.0 U	4.0 U	4.0 U	2.0 U	2.0 U	2.0 U	4,000 U	4,000 U	4,000 U	2,000 U	1,000 U	400 U	200 U	500 U	400 U	400 U	200 U	NA	4.0 U	2.0 U
	sec-Butylbenzene	4,000[1]	50,000[1]	2.0 U	2.0 U	2.0 U	2.0 U	2.0 U	2.0 U	2.0 U	2.0 U	4.0 U	4.0 U	2.0 U	2.0 U	2.0 U	4,000 U	4,000 U	4,000 U	2,000 U	1,000 U	400 U	200 U	500 U	400 U	400 U	200 U	NA	4.0 U	2.0 U
	tert-Butylbenzene	4,000[1]	50,000[1]	2.0 U	2.0 U	2.0 U	2.0 U	2.0 U	2.0 U	2.0 U	2.0 U	4.0 U	4.0 U	2.0 U	2.0 U	2.0 U	4,000 U	4,000 U	4,000 U	2,000 U	1,000 U	400 U	200 U	500 U	400 U	400 U	200 U	NA	4.0 U	2.0 U
	2-Chlorotoluene	NS	NS	2.0 U	2.0 U	2.0 U	2.0 U	2.0 U	2.0 U	2.0 U	2.0 U	4.0 U	4.0 U	2.0 U	2.0 U	2.0 U	4,000 U	4,000 U	4,000 U	2,000 U	1,000 U	400 U	200 U	500 U	400 U	400 U	200 U	NA	4.0 U	2.0 U
	4-Chlorotoluene	NS	NS	2.0 U	2.0 U	2.0 U	2.0 U	2.0 U	2.0 U	2.0 U	2.0 U	4.0 U	4.0 U	2.0 U	2.0 U	2.0 U	4,000 U	4,000 U	4,000 U	2,000 U	1,000 U	400 U	200 U	500 U	400 U	400 U	200 U	NA	4.0 U	2.0 U
	1,2-Dibromo-3-chloropropane (DBCP)	NS	NS	2.0 U	2.0 U	2.0 U	2.0 U	2.0 U	2.0 U	2.0 U	2.0 U	4.0 U	4.0 U	2.0 U	2.0 U	2.0 U	4,000 U	4,000 U	4,000 U	2,000 U	1,000 U	400 U	200 U	500 U	400 U	400 U	200 U	NA	4.0 U	2.0 U
	Hexachlorobutadiene	50	3,000	0.60 U	0.60 U	0.60 U	0.60 U	0.60 U	0.60 U	0.60 U	0.60 U	1.2 U	1.2 U	0.60 U	0.60 U	0.60 U	1,200 U	1,200 U	1,200 U	600 U	300 U	120 U	60 U	150 U	120 U	120 U	60 U	NA	1.2 U	0.60 U
	Isopropylbenzene (Cumene)	4,000[1]	50,000[1]	2.0 U	2.0 U	2.0 U	2.0 U	2.0 U	2.0 U	2.0 U	2.0 U	4.0 U	4.0 U	2.0 U	2.0 U	2.0 U	4,000 U	4,000 U	4,000 U	2,000 U	1,000 U	400 U	200 U	500 U	400 U	400 U	200 U	NA	4.0 U	2.0 U
	p-Isopropyltoluene (p-Cymene)	4,000[1]	50,000[1]	2.0 U	2.0 U	2.0 U	2.0 U	2.0 U	2.0 U	2.0 U	2.0 U	4.0 U	4.0 U	2.0 U	2.0 U	2.0 U	4,000 U	4,000 U	4,000 U	2,000 U	1,000 U	400 U	200 U	500 U	400 U	400 U	200 U	NA	4.0 U	2.0 U
	Naphthalene	700	20,000	2.0 U	2.0 U	2.0 U	2.0 U	2.0 U	2.0 U	2.0 U	2.0 U	4.0 U	4.0 U	2.0 U	2.0 U	2.0 U	4,000 U	4,000 U	4,000 U	2,000 U	1,000 U	400 U	200 U	500 U	400 U	400 U	200 U	NA	4.0 U	2.0 U
	n-Propylbenzene	4,000[1]	50,000[1]	2.0 U	2.0 U	2.0 U	2.0 U	2.0 U	2.0 U	2.0 U	2.0 U	4.0 U	4.0 U	2.0 U	2.0 U	2.0 U	4,000 U	4,000 U	4,000 U	2,000 U	1,000 U	400 U	200 U	500 U	400 U	400 U	200 U	NA	4.0 U	2.0 U
	1,2,3-Trichlorobenzene	NS	NS	2.0 U	2.0 U	2.0 U	2.0 U	2.0 U	2.0 U	2.0 U	2.0 U	4.0 U	4.0 U	2.0 U	2.0 U	2.0 U	4,000 U	4,000 U	4,000 U	2,000 U	1,000 U	400 U	200 U	500 U	400 U	400 U	200 U	NA	4.0 U	**3.3**
	1,2,4-Trichlorobenzene	200	50,000	2.0 U	2.0 U	2.0 U	2.0 U	2.0 U	2.0 U	2.0 U	2.0 U	4.0 U	4.0 U	2.0 U	2.0 U	2.0 U	4,000 U	4,000 U	4,000 U	2,000 U	1,000 U	400 U	200 U	500 U	400 U	400 U	200 U	NA	**23**	**14**
	1,3,5-Trimethylbenzene	4,000[1]	50,000[1]	2.0 U	2.0 U	2.0 U	2.0 U	2.0 U	2.0 U	2.0 U	2.0 U	4.0 U	4.0 U	2.0 U	2.0 U	2.0 U	4,000 U	4,000 U	4,000 U	2,000 U	1,000 U	400 U	200 U	500 U	400 U	400 U	200 U	NA	4.0 U	2.0 U
	1,2,4-Trimethylbenzene	4,000[1]	50,000[1]	2.0 U	2.0 U	2.0 U	2.0 U	2.0 U	2.0 U	2.0 U	2.0 U	4.0 U	4.0 U	2.0 U	2.0 U	2.0 U	4,000 U	4,000 U	4,000 U	2,000 U	1,000 U	400 U	200 U	500 U	400 U	400 U	200 U	NA	4.0 U	2.0 U
	Diisopropyl Ether (DIPE)	NS	NS	2.0 U	2.0 U	2.0 U	2.0 U	2.0 U	2.0 U	2.0 U	2.0 U	4.0 U	4.0 U	2.0 U	2.0 U	2.0 U	4,000 U	4,000 U	4,000 U	2,000 U	1,000 U	400 U	200 U	500 U	400 U	400 U	200 U	NA	4.0 U	2.0 U
	tert-Butyl Ethyl Ether (TBEE)	NS	NS	2.0 U	2.0 U	2.0 U	2.0 U	2.0 U	2.0 U	2.0 U	2.0 U	4.0 U	4.0 U	2.0 U	2.0 U	2.0 U	4,000 U	4,000 U	4,000 U	2,000 U	1,000 U	400 U	200 U	500 U	400 U	400 U	200 U	NA	4.0 U	2.0 U
	tert-Amyl Methyl Ether (TAME)	NS	NS	2.0 U	2.0 U	2.0 U	2.0 U	2.0 U	2.0 U	2.0 U	2.0 U	4.0 U	4.0 U	2.0 U	2.0 U	2.0 U	4,000 U	4,000 U	4,000 U	2,000 U	1,000 U	400 U	200 U	500 U	400 U	400 U	200 U	NA	4.0 U	2.0 U
	1,4-Dioxane	6,000	50,000	250 U	250 U	250 U	250 U	250 U	250 U	250 U	250 U	500 U	500 U	250 U	250 U	250 U	500,000 U	500,000 U	500,000 U	250,000 U	120,000 U	50,000 U	25,000 U	62,000 U	50,000 U	50,000 U	25,000 U	NA	500 U	250 U
	Diethyl Ether	NS	NS	2.0 U	2.0 U	2.0 U	2.0 U	2.0 U	2.0 U	2.0 U	2.0 U	4.0 U	4.0 U	2.0 U	2.0 U	2.0 U	4,000 U	4,000 U	4,000 U	2,000 U	1,000 U	400 U	200 U	500 U	400 U	400 U	200 U	NA	4.0 U	2.0 U

Table 2
Summary of Analytical Results for Groundwater Samples --
2008 through 2015
New Bedford High School
New Bedford, Massachusetts

Analysis	Analyte		Sample ID:	MW-27D													MW-27R													
		Filter Size (micron)^:		N/A	N/A	N/A	N/A	N/A	N/A	N/A	N/A	N/A	N/A	N/A	N/A	N/A	N/A	N/A	N/A	N/A	N/A	N/A	N/A	N/A	N/A	N/A	N/A	N/A	N/A	N/A
		Sample Date:		11/18/2010	3/8/2011	3/25/2011	4/8/2011	4/29/2011	4/29/2011	7/27/2011	8/25/2011	2/27/2012	2/27/2012	4/11/2012	4/11/2012	12/13/2012	3/8/2011	3/8/2011	3/25/2011	4/8/2011	4/29/2011	7/27/2011	7/27/2011	8/2/2011	8/25/2011	8/25/2011	2/27/2012	2/27/2012	9/18/2012	10/18/2012
		GW-2	GW-3						Field Dup				Field Dup		Field Dup			Field Dup						Field Dup			Field Dup		Field Dup		
PAHs																														
(ug/L)	Acenaphthene	NS	10,000	NA	NA	NA	NA	NA	NA	NA	NA	NA	NA	NA	NA	NA	NA	NA	NA	NA	NA	NA	NA	NA	NA	NA	NA	NA	NA	NA
	Acenaphthylene	10,000	40	NA	NA	NA	NA	NA	NA	NA	NA	NA	NA	NA	NA	NA	NA	NA	NA	NA	NA	NA	NA	NA	NA	NA	NA	NA	NA	NA
	Anthracene	NS	30	NA	NA	NA	NA	NA	NA	NA	NA	NA	NA	NA	NA	NA	NA	NA	NA	NA	NA	NA	NA	NA	NA	NA	NA	NA	NA	NA
	Benzo(a)anthracene	NS	1,000	NA	NA	NA	NA	NA	NA	NA	NA	NA	NA	NA	NA	NA	NA	NA	NA	NA	NA	NA	NA	NA	NA	NA	NA	NA	NA	NA
	Benzo(a)pyrene	NS	500	NA	NA	NA	NA	NA	NA	NA	NA	NA	NA	NA	NA	NA	NA	NA	NA	NA	NA	NA	NA	NA	NA	NA	NA	NA	NA	NA
	Benzo(b)fluoranthene	NS	400	NA	NA	NA	NA	NA	NA	NA	NA	NA	NA	NA	NA	NA	NA	NA	NA	NA	NA	NA	NA	NA	NA	NA	NA	NA	NA	NA
	Benzo(g,h,i)perylene	NS	20	NA	NA	NA	NA	NA	NA	NA	NA	NA	NA	NA	NA	NA	NA	NA	NA	NA	NA	NA	NA	NA	NA	NA	NA	NA	NA	NA
	Benzo(k)fluoranthene	NS	100	NA	NA	NA	NA	NA	NA	NA	NA	NA	NA	NA	NA	NA	NA	NA	NA	NA	NA	NA	NA	NA	NA	NA	NA	NA	NA	NA
	Chrysene	NS	70	NA	NA	NA	NA	NA	NA	NA	NA	NA	NA	NA	NA	NA	NA	NA	NA	NA	NA	NA	NA	NA	NA	NA	NA	NA	NA	NA
	Dibenz(a,h)anthracene	NS	40	NA	NA	NA	NA	NA	NA	NA	NA	NA	NA	NA	NA	NA	NA	NA	NA	NA	NA	NA	NA	NA	NA	NA	NA	NA	NA	NA
	Fluoranthene	NS	200	NA	NA	NA	NA	NA	NA	NA	NA	NA	NA	NA	NA	NA	NA	NA	NA	NA	NA	NA	NA	NA	NA	NA	NA	NA	NA	NA
	Fluorene	NS	40	NA	NA	NA	NA	NA	NA	NA	NA	NA	NA	NA	NA	NA	NA	NA	NA	NA	NA	NA	NA	NA	NA	NA	NA	NA	NA	NA
	Indeno(1,2,3-cd)pyrene	NS	100	NA	NA	NA	NA	NA	NA	NA	NA	NA	NA	NA	NA	NA	NA	NA	NA	NA	NA	NA	NA	NA	NA	NA	NA	NA	NA	NA
	2-Methylnaphthalene	2,000	20,000	NA	NA	NA	NA	NA	NA	NA	NA	NA	NA	NA	NA	NA	NA	NA	NA	NA	NA	NA	NA	NA	NA	NA	NA	NA	NA	NA
	Naphthalene	700	20,000	NA	NA	NA	NA	NA	NA	NA	NA	NA	NA	NA	NA	NA	NA	NA	NA	NA	NA	NA	NA	NA	NA	NA	NA	NA	NA	NA
	Phenanthrene	NS	10,000	NA	NA	NA	NA	NA	NA	NA	NA	NA	NA	NA	NA	NA	NA	NA	NA	NA	NA	NA	NA	NA	NA	NA	NA	NA	NA	NA
	Pyrene	NS	20	NA	NA	NA	NA	NA	NA	NA	NA	NA	NA	NA	NA	NA	NA	NA	NA	NA	NA	NA	NA	NA	NA	NA	NA	NA	NA	NA
PCBs																														
(ug/L)	Aroclor 1016	NS	NS	NA	NA	NA	NA	NA	NA	NA	0.150 U	0.10 U	NA	0.0500 U	0.0500 U	0.25 U	NA	NA	NA	NA	NA	NA	NA	NA	2.50 U	3.00 U	3.5 U	3.54 U	5.0 U	5.0 U
	Aroclor 1221	NS	NS	NA	NA	NA	NA	NA	NA	NA	0.150 U	0.10 U	NA	0.0500 U	0.0500 U	0.25 U	NA	NA	NA	NA	NA	NA	NA	NA	2.50 U	3.00 U	3.5 U	3.54 U	5.0 U	5.0 U
	Aroclor 1232	NS	NS	NA	NA	NA	NA	NA	NA	NA	0.150 U	0.10 U	NA	0.0500 U	0.0500 U	0.25 U	NA	NA	NA	NA	NA	NA	NA	NA	2.50 U	3.00 U	3.5 U	3.54 U	5.0 U	5.0 U
	Aroclor 1242	NS	NS	NA	NA	NA	NA	NA	NA	NA	0.150 U	0.10 U	NA	0.0500 U	0.0500 U	0.25 U	NA	NA	NA	NA	NA	NA	NA	NA	**7.62**	**7.52**	3.5 U	3.54 U	5.0 U	5.0 U
	Aroclor 1248	NS	NS	NA	NA	NA	NA	NA	NA	NA	**0.358**	**0.206**	NA	0.0500 U	0.0500 U	0.25 U	NA	NA	NA	NA	NA	NA	NA	NA	2.50 U	3.00 U	**11.5**	**9.99**	5.0 U	5.0 U
	Aroclor 1254	NS	NS	NA	NA	NA	NA	NA	NA	NA	**1.20**	**0.605**	NA	**0.0973 J**	**0.102 J**	0.25 U	NA	NA	NA	NA	NA	NA	NA	NA	**30.0**	**33.80**	**13.0**	**10.6**	**105**	**69.7**
	Aroclor 1260	NS	NS	NA	NA	NA	NA	NA	NA	NA	0.150 U	0.10 U	NA	0.0500 U	0.0500 U	0.25 U	NA	NA	NA	NA	NA	NA	NA	NA	2.50 U	3.00 U	3.5 U	3.54 U	5.0 U	5.0 U
	Aroclor 1262	NS	NS	NA	NA	NA	NA	NA	NA	NA	NA	NA	NA	NA	NA	0.25 U	NA	NA	NA	NA	NA	NA	NA	NA	NA	NA	NA	NA	5.0 U	5.0 U
	Aroclor 1268	NS	NS	NA	NA	NA	NA	NA	NA	NA	NA	NA	NA	NA	NA	0.25 U	NA	NA	NA	NA	NA	NA	NA	NA	NA	NA	NA	NA	5.0 U	5.0 U
	Total PCBs	5	10	NA	NA	NA	NA	NA	NA	NA	**1.558**	**0.811**	NA	**0.0973 J**	**0.102 J**	0.25 U	NA	NA	NA	NA	NA	NA	NA	NA	**37.62**	**41.32**	**24.5**	**20.59**	**105**	**69.7**
Total Petroleum Hydrocarbons																														
(ug/L)	Total Petroleum Hydrocarbons (C9-C44)	5,000	5,000	NA	NA	NA	NA	NA	NA	NA	NA	NA	NA	NA	NA	NA	NA	NA	NA	NA	NA	NA	NA	NA	NA	NA	NA	NA	NA	NA
Metals, total																														
(ug/L)	Antimony	NS	8,000	NA	NA	NA	NA	NA	NA	NA	NA	NA	NA	NA	NA	NA	NA	NA	NA	NA	NA	NA	NA	NA	NA	NA	NA	NA	NA	NA
	Arsenic	NS	900	NA	NA	NA	NA	NA	NA	NA	NA	NA	NA	NA	NA	NA	NA	NA	NA	NA	NA	NA	NA	NA	NA	NA	NA	NA	NA	NA
	Barium	NS	50,000	NA	NA	NA	NA	NA	NA	NA	NA	NA	NA	NA	NA	NA	NA	NA	NA	NA	NA	NA	NA	NA	NA	NA	NA	NA	NA	NA
	Beryllium	NS	200	NA	NA	NA	NA	NA	NA	NA	NA	NA	NA	NA	NA	NA	NA	NA	NA	NA	NA	NA	NA	NA	NA	NA	NA	NA	NA	NA
	Cadmium	NS	4	NA	NA	NA	NA	NA	NA	NA	NA	NA	NA	NA	NA	NA	NA	NA	NA	NA	NA	NA	NA	NA	NA	NA	NA	NA	NA	NA
	Chromium	NS	300	NA	NA	NA	NA	NA	NA	NA	NA	NA	NA	NA	NA	NA	NA	NA	NA	NA	NA	NA	NA	NA	NA	NA	NA	NA	NA	NA
	Lead	NS	10	NA	NA	NA	NA	NA	NA	NA	NA	NA	NA	NA	NA	NA	NA	NA	NA	NA	NA	NA	NA	NA	NA	NA	NA	NA	NA	NA
	Mercury	NS	20	NA	NA	NA	NA	NA	NA	NA	NA	NA	NA	NA	NA	NA	NA	NA	NA	NA	NA	NA	NA	NA	NA	NA	NA	NA	NA	NA
	Nickel	NS	200	NA	NA	NA	NA	NA	NA	NA	NA	NA	NA	NA	NA	NA	NA	NA	NA	NA	NA	NA	NA	NA	NA	NA	NA	NA	NA	NA
	Selenium	NS	100	NA	NA	NA	NA	NA	NA	NA	NA	NA	NA	NA	NA	NA	NA	NA	NA	NA	NA	NA	NA	NA	NA	NA	NA	NA	NA	NA
	Silver	NS	7	NA	NA	NA	NA	NA	NA	NA	NA	NA	NA	NA	NA	NA	NA	NA	NA	NA	NA	NA	NA	NA	NA	NA	NA	NA	NA	NA
	Thallium	NS	3,000	NA	NA	NA	NA	NA	NA	NA	NA	NA	NA	NA	NA	NA	NA	NA	NA	NA	NA	NA	NA	NA	NA	NA	NA	NA	NA	NA
	Vanadium	NS	4,000	NA	NA	NA	NA	NA	NA	NA	NA	NA	NA	NA	NA	NA	NA	NA	NA	NA	NA	NA	NA	NA	NA	NA	NA	NA	NA	NA
	Zinc	NS	900	NA	NA	NA	NA	NA	NA	NA	NA	NA	NA	NA	NA	NA	NA	NA	NA	NA	NA	NA	NA	NA	NA	NA	NA	NA	NA	NA
Metals, dissolved																														
(ug/L)	Antimony	NS	8,000	NA	NA	NA	NA	NA	NA	NA	NA	NA	NA	NA	NA	NA	NA	NA	NA	NA	NA	NA	NA	NA	NA	NA	NA	NA	NA	NA
	Arsenic	NS	900	NA	NA	NA	NA	NA	NA	NA	NA	NA	NA	NA	NA	NA	NA	NA	NA	NA	NA	NA	NA	NA	NA	NA	NA	NA	NA	NA
	Barium	NS	50,000	NA	NA	NA	NA	NA	NA	NA	NA	NA	NA	NA	NA	NA	NA	NA	NA	NA	NA	NA	NA	NA	NA	NA	NA	NA	NA	NA
	Beryllium	NS	200	NA	NA	NA	NA	NA	NA	NA	NA	NA	NA	NA	NA	NA	NA	NA	NA	NA	NA	NA	NA	NA	NA	NA	NA	NA	NA	NA
	Cadmium	NS	4	NA	NA	NA	NA	NA	NA	NA	NA	NA	NA	NA	NA	NA	NA	NA	NA	NA	NA	NA	NA	NA	NA	NA	NA	NA	NA	NA
	Chromium	NS	300	NA	NA	NA	NA	NA	NA	NA	NA	NA	NA	NA	NA	NA	NA	NA	NA	NA	NA	NA	NA	NA	NA	NA	NA	NA	NA	NA
	Lead	NS	10	NA	NA	NA	NA	NA	NA	NA	NA	NA	NA	NA	NA	NA	NA	NA	NA	NA	NA	NA	NA	NA	NA	NA	NA	NA	NA	NA
	Mercury	NS	20	NA	NA	NA	NA	NA	NA	NA	NA	NA	NA	NA	NA	NA	NA	NA	NA	NA	NA	NA	NA	NA	NA	NA	NA	NA	NA	NA
	Nickel	NS	200	NA	NA	NA	NA	NA	NA	NA	NA	NA	NA	NA	NA	NA	NA	NA	NA	NA	NA	NA	NA	NA	NA	NA	NA	NA	NA	NA
	Selenium	NS	100	NA	NA	NA	NA	NA	NA	NA	NA	NA	NA	NA	NA	NA	NA	NA	NA	NA	NA	NA	NA	NA	NA	NA	NA	NA	NA	NA
	Silver	NS	7	NA	NA	NA	NA	NA	NA	NA	NA	NA	NA	NA	NA	NA	NA	NA	NA	NA	NA	NA	NA	NA	NA	NA	NA	NA	NA	NA
	Thallium	NS	3,000	NA	NA	NA	NA	NA	NA	NA	NA	NA	NA	NA	NA	NA	NA	NA	NA	NA	NA	NA	NA	NA	NA	NA	NA	NA	NA	NA
	Vanadium	NS	4,000	NA	NA	NA	NA	NA	NA	NA	NA	NA	NA	NA	NA	NA	NA	NA	NA	NA	NA	NA	NA	NA	NA	NA	NA	NA	NA	NA
	Zinc	NS	900	NA	NA	NA	NA	NA	NA	NA	NA	NA	NA	NA	NA	NA	NA	NA	NA	NA	NA	NA	NA	NA	NA	NA	NA	NA	NA	NA
General Chemistry																														
(ug/L)	Nitrogen, Nitrate	NS	NS	NA	NA	NA	NA	NA	NA	NA	NA	NA	NA	NA	NA	NA	NA	NA	NA	NA	NA	NA	NA	NA	NA	NA	NA	NA	NA	NA
	Sulfate	NS	NS	NA	NA	NA	NA	NA	NA	NA	NA	NA	NA	NA	NA	NA	NA	NA	NA	NA	NA	NA	NA	NA	NA	NA	NA	NA	NA	NA
	Total Organic Carbon	NS	NS	NA	NA	NA	NA	NA	NA	NA	NA	NA	NA	NA	NA	NA	NA	NA	NA	NA	NA	NA	NA	NA	NA	NA	NA	NA	NA	NA

Notes:
ug/L - micrograms per liter.
B - Compound detected in associated method blank
J - Estimated value.
NA - Sample not analyzed for the listed analyte.
N/A - Not applicable.
NS - No MassDEP standards exist for this compound.
U - Compound was not detected at specified quantitation limit.
Values in **Bold** indicate the compound was detected.
VOCs - Volatile Organic Compounds.
PAHs - Polynuclear Aromatic Hydrocarbons.
PCBs - Polychlorinated Biphenyls.
(1) - MassDEP Method 1 standards for C9-C10 aromatic hydrocarbons used.
(2) - MassDEP Method 1 standards for 1,3-Dichloropropene used.
(3) - criteria applicable to xylene (total), the sum of the xylene isomers.
^ - 0.45 micron filtration done in field; 0.20 and 2.0 micron filtration performed in lab.
* - Sample collected on 4/10/2012 for PCB analysis was broken and was recollected on 4/18/2012.
** - Lab filtered sample using a 2.0 micron filter and then filtered a second time using a 0.20 micron fil

Table 2
Summary of Analytical Results for Groundwater Samples --
2008 through 2015
New Bedford High School
New Bedford, Massachusetts

Analysis	Analyte		Sample ID:	MW-27R											MW-28																		
		Filter Size (micron)^:		N/A	N/A	0.45	0.20	N/A	0.45	0.20	N/A	0.45	N/A	0.45	N/A	N/A	N/A	N/A	N/A	N/A	N/A	N/A	N/A	N/A	N/A	N/A	N/A	N/A	N/A	2.0	2.0	0.45	0.45	0.20
		Sample Date:		12/14/2012	2/14/2014	2/14/2014	2/14/2014	2/21/2014	2/21/2014	2/21/2014	1/5/2015	1/5/2015	7/27/2015	7/27/2015	9/9/2010	10/21/2010	3/8/2011	3/25/2011	4/11/2011	4/28/2011	7/27/2011	8/2/2011	8/25/2011	2/27/2012	4/11/2012	12/13/2012	1/16/2014	1/16/2014	1/16/2014	1/16/2014	1/16/2014	1/16/2014	1/16/2014
		GW-2	GW-3																									Field Dup		Field Dup		Field Dup	**
VOCs																																	
(ug/L)	Methylene Chloride	2,000	50,000	2.0 U	2.0 U	NA	NA	2.0 U	NA	NA	2.0 U	NA	2.0 U	NA	2.0 U	2.0 U	2.0 U	5.0 U	2.0 U	10 U	2.0 U	5.0 U	2.0 U	2.0 U	10 U	2.0 U	2.0 U	2.0 U	NA	NA	NA	NA	NA
	1,1-Dichloroethane	2,000	20,000	1.0 U	1.0 U	NA	NA	1.0 U	NA	NA	1.0 U	NA	1.0 U	NA	1.0 U	1.0 U	1.0 U	2.5 U	1.0 U	5.0 U	1.0 U	2.5 U	1.0 U	1.0 U	5.0 U	1.0 U	1.0 U	1.0 U	NA	NA	NA	NA	NA
	Chloroform	50	20,000	1.0 U	1.0 U	NA	NA	1.0 U	NA	NA	1.0 U	NA	1.0 U	NA	1.0 U	1.0 U	1.0 U	2.5 U	1.0 U	5.0 U	1.0 U	2.5 U	1.0 U	1.0 U	5.0 U	1.0 U	1.0 U	1.0 U	NA	NA	NA	NA	NA
	Carbon Tetrachloride	2	5,000	1.0 U	1.0 U	NA	NA	1.0 U	NA	NA	1.0 U	NA	1.0 U	NA	1.0 U	1.0 U	1.0 U	2.5 U	1.0 U	5.0 U	1.0 U	2.5 U	1.0 U	1.0 U	5.0 U	1.0 U	1.0 U	1.0 U	NA	NA	NA	NA	NA
	1,2-Dichloropropane	3	50,000	1.0 U	1.0 U	NA	NA	1.0 U	NA	NA	1.0 U	NA	1.0 U	NA	1.0 U	1.0 U	1.0 U	2.5 U	1.0 U	5.0 U	1.0 U	2.5 U	1.0 U	1.0 U	5.0 U	1.0 U	1.0 U	1.0 U	NA	NA	NA	NA	NA
	Chlorodibromomethane	20	50,000	1.0 U	1.0 U	NA	NA	1.0 U	NA	NA	1.0 U	NA	1.0 U	NA	1.0 U	1.0 U	1.0 U	2.5 U	1.0 U	5.0 U	1.0 U	2.5 U	1.0 U	1.0 U	5.0 U	1.0 U	1.0 U	1.0 U	NA	NA	NA	NA	NA
	1,1,2-Trichloroethane	900	50,000	1.0 U	1.0 U	NA	NA	1.0 U	NA	NA	1.0 U	NA	1.0 U	NA	1.0 U	1.0 U	1.0 U	2.5 U	1.0 U	5.0 U	1.0 U	2.5 U	1.0 U	1.0 U	5.0 U	1.0 U	1.0 U	1.0 U	NA	NA	NA	NA	NA
	Tetrachloroethylene	50	30,000	1.0 U	1.0 U	NA	NA	1.0 U	NA	NA	1.0 U	NA	1.0 U	NA	1.0 U	1.0 U	1.0 U	2.5 U	1.0 U	5.0 U	1.0 U	2.5 U	1.0 U	1.0 U	5.0 U	1.0 U	1.0 U	1.0 U	NA	NA	NA	NA	NA
	Chlorobenzene	200	1,000	**1.5**	1.0 U	NA	NA	1.0 U	NA	NA	1.0 U	NA	1.0 U	NA	**38**	**8.5**	1.0 U	2.5 U	1.0 U	5.0 U	**28**	**39**	**35**	**4.2**	**11**	1.0 U	1.0 U	1.0 U	NA	NA	NA	NA	NA
	Trichlorofluoromethane (Freon 11)	NS	NS	2.0 U	2.0 U	NA	NA	2.0 U	NA	NA	2.0 U	NA	2.0 U	NA	2.0 U	2.0 U	2.0 U	5.0 U	2.0 U	10 U	2.0 U	5.0 U	2.0 U	2.0 U	10 U	2.0 U	2.0 U	2.0 U	NA	NA	NA	NA	NA
	1,2-Dichloroethane	5	20,000	1.0 U	1.0 U	NA	NA	1.0 U	NA	NA	1.0 U	NA	1.0 U	NA	1.0 U	1.0 U	1.0 U	2.5 U	1.0 U	5.0 U	1.0 U	2.5 U	1.0 U	1.0 U	5.0 U	1.0 U	1.0 U	1.0 U	NA	NA	NA	NA	NA
	1,1,1-Trichloroethane	4,000	20,000	1.0 U	1.0 U	NA	NA	1.0 U	NA	NA	1.0 U	NA	1.0 U	NA	1.0 U	1.0 U	1.0 U	2.5 U	1.0 U	5.0 U	1.0 U	2.5 U	1.0 U	1.0 U	5.0 U	1.0 U	1.0 U	1.0 U	NA	NA	NA	NA	NA
	Bromodichloromethane	6	50,000	1.0 U	1.0 U	NA	NA	1.0 U	NA	NA	1.0 U	NA	1.0 U	NA	1.0 U	1.0 U	1.0 U	2.5 U	1.0 U	5.0 U	1.0 U	2.5 U	1.0 U	1.0 U	5.0 U	1.0 U	1.0 U	1.0 U	NA	NA	NA	NA	NA
	trans-1,3-Dichloropropene	10[2]	200[2]	0.50 U	0.50 U	NA	NA	0.50 U	NA	NA	0.50 U	NA	0.50 U	NA	0.50 U	0.50 U	0.50 U	1.2 U	0.50 U	2.5 U	0.50 U	1.2 U	0.50 U	0.50 U	2.5 U	0.50 U	0.50 U	0.50 U	NA	NA	NA	NA	NA
	cis-1,3-Dichloropropene	10[2]	200[2]	0.50 U	0.50 U	NA	NA	0.50 U	NA	NA	0.50 U	NA	0.50 U	NA	0.50 U	0.50 U	0.50 U	1.2 U	0.50 U	2.5 U	0.50 U	1.2 U	0.50 U	0.50 U	2.5 U	0.50 U	0.50 U	0.50 U	NA	NA	NA	NA	NA
	1,3-Dichloropropene, Total	10	200	NA	NA	NA	NA	NA	NA	NA	0.50 U	NA	0.50 U	NA	NA	NA	NA	NA	NA	NA	NA	NA	NA	NA	NA	NA	NA	NA	NA	NA	NA	NA	NA
	1,1-Dichloropropene	NS	NS	2.0 U	2.0 U	NA	NA	2.0 U	NA	NA	2.0 U	NA	2.0 U	NA	2.0 U	2.0 U	2.0 U	5.0 U	2.0 U	10 U	2.0 U	5.0 U	2.0 U	2.0 U	10 U	2.0 U	2.0 U	2.0 U	NA	NA	NA	NA	NA
	Bromoform	700	50,000	2.0 U	2.0 U	NA	NA	2.0 U	NA	NA	2.0 U	NA	2.0 U	NA	2.0 U	2.0 U	2.0 U	5.0 U	2.0 U	10 U	2.0 U	5.0 U	2.0 U	2.0 U	10 U	2.0 U	2.0 U	2.0 U	NA	NA	NA	NA	NA
	1,1,2,2-Tetrachloroethane	9	50,000	1.0 U	1.0 U	NA	NA	1.0 U	NA	NA	1.0 U	NA	1.0 U	NA	1.0 U	1.0 U	1.0 U	2.5 U	1.0 U	5.0 U	1.0 U	2.5 U	1.0 U	1.0 U	5.0 U	1.0 U	1.0 U	1.0 U	NA	NA	NA	NA	NA
	Benzene	1,000	10,000	0.50 U	0.50 U	NA	NA	0.50 U	NA	NA	0.50 U	NA	0.50 U	NA	1.0 U	1.0 U	1.0 U	2.5 U	1.0 U	5.0 U	**0.56**	1.2 U	**0.65**	0.5 U	2.5 U	0.50 U	0.50 U	0.50 U	NA	NA	NA	NA	NA
	Toluene	50,000	40,000	1.0 U	**2.9**	NA	NA	1.0 U	NA	NA	1.0 U	NA	1.0 U	NA	1.0 U	1.0 U	1.0 U	2.5 U	1.0 U	5.0 U	1.0 U	2.5 U	1.0 U	1.0 U	5.0 U	1.0 U	1.0 U	1.0 U	NA	NA	NA	NA	NA
	Ethylbenzene	20,000	5,000	**5.8**	1.0 U	NA	NA	1.0 U	NA	NA	1.0 U	NA	1.0 U	NA	1.0 U	1.0 U	1.0 U	2.5 U	1.0 U	5.0 U	1.0 U	2.5 U	1.0 U	1.0 U	5.0 U	1.0 U	1.0 U	1.0 U	NA	NA	NA	NA	NA
	Chloromethane	NS	NS	2.0 U	2.0 U	NA	NA	2.0 U	NA	NA	2.0 U	NA	2.0 U	NA	2.0 U	2.0 U	2.0 U	5.0 U	2.0 U	10 U	2.0 U	5.0 U	2.0 U	2.0 U	10 U	2.0 U	2.0 U	2.0 U	NA	NA	NA	NA	NA
	Bromomethane	7	800	2.0 U	2.0 U	NA	NA	2.0 U	NA	NA	2.0 U	NA	2.0 U	NA	2.0 U	2.0 U	2.0 U	5.0 U	2.0 U	10 U	2.0 U	5.0 U	2.0 U	2.0 U	10 U	2.0 U	2.0 U	2.0 U	NA	NA	NA	NA	NA
	Vinyl Chloride	2	50,000	**16**	1.0 U	NA	NA	1.0 U	NA	NA	**1.2**	NA	**2.6**	NA	**9.7**	**3.8**	**10**	**22**	**23**	**7.4**	**36**	**42**	**55**	**90**	**130**	**6.5**	1.0 U	1.0 U	NA	NA	NA	NA	NA
	Chloroethane	NS	NS	2.0 U	2.0 U	NA	NA	2.0 U	NA	NA	2.0 U	NA	2.0 U	NA	2.0 U	2.0 U	2.0 U	5.0 U	2.0 U	10 U	2.0 U	5.0 U	2.0 U	2.0 U	10 U	2.0 U	2.0 U	2.0 U	NA	NA	NA	NA	NA
	1,1-Dichloroethylene	80	30,000	1.0 U	1.0 U	NA	NA	1.0 U	NA	NA	1.0 U	NA	1.0 U	NA	1.0 U	1.0 U	1.0 U	2.5 U	1.0 U	5.0 U	1.0 U	2.5 U	1.0 U	**2.7**	5.0 U	1.0 U	1.0 U	1.0 U	NA	NA	NA	NA	NA
	trans-1,2-Dichloroethylene	80	50,000	**9.2**	1.0 U	NA	NA	1.0 U	NA	NA	1.0 U	NA	**1.9**	NA	**9.2**	**2.9**	**15**	**40**	**36**	**12**	**51**	**42**	**51**	**100**	**95**	**7.2**	1.0 U	1.0 U	NA	NA	NA	NA	NA
	Trichloroethylene	5	5,000	**5.8**	**1.2**	NA	NA	**7.6**	NA	NA	**12**	NA	**5.8**	NA	**11**	**5.0**	**110**	**220**	**200**	**150**	**87**	**52**	**78**	**190**	**180**	**43**	**24**	**24**	NA	NA	NA	NA	NA
	1,2-Dichlorobenzene	8,000	2,000	**2.7**	1.0 U	NA	NA	1.0 U	NA	NA	1.0 U	NA	1.0 U	NA	**2.0**	1.0 U	1.0 U	2.5 U	1.0 U	5.0 U	1.0 U	2.5 U	**1.2**	1.0 U	5.0 U	1.0 U	1.0 U	1.0 U	NA	NA	NA	NA	NA
	1,3-Dichlorobenzene	6,000	50,000	**7.8**	**1.2**	NA	NA	**1.0**	NA	NA	**1.5**	NA	1.0 U	NA	**9.9**	**2.5**	1.0 U	**0.84 J**	1.0 U	5.0 U	**3.8**	**6.0**	**6.2**	**1.0**	5.0 U	**1.3**	1.0 U	1.0 U	NA	NA	NA	NA	NA
	1,4-Dichlorobenzene	60	8,000	**40**	**4.8**	NA	NA	**4.4**	NA	NA	**6.0**	NA	1.0 U	NA	**48**	**11**	**2.7**	**3.4**	**3.8**	5.0 U	**12**	**23**	**25**	**3.5**	**9.3**	**5.5**	**3.0**	**3.0**	NA	NA	NA	NA	NA
	Methyl tert-Butyl Ether (MTBE)	50,000	50,000	2.0 U	2.0 U	NA	NA	2.0 U	NA	NA	2.0 U	NA	2.0 U	NA	2.0 U	2.0 U	2.0 U	5.0 U	2.0 U	10 U	2.0 U	5.0 U	2.0 U	2.0 U	10 U	2.0 U	2.0 U	2.0 U	NA	NA	NA	NA	NA
	m+p Xylene	3,000[3]	5,000[3]	2.0 U	2.0 U	NA	NA	2.0 U	NA	NA	2.0 U	NA	2.0 U	NA	2.0 U	2.0 U	2.0 U	5.0 U	2.0 U	10 U	2.0 U	5.0 U	2.0 U	2.0 U	10 U	2.0 U	2.0 U	2.0 U	NA	NA	NA	NA	NA
	o-Xylene	3,000[3]	5,000[3]	1.0 U	1.0 U	NA	NA	1.0 U	NA	NA	1.0 U	NA	1.0 U	NA	1.0 U	1.0 U	1.0 U	2.5 U	1.0 U	5.0 U	1.0 U	2.5 U	1.0 U	1.0 U	5.0 U	1.0 U	1.0 U	1.0 U	NA	NA	NA	NA	NA
	Xylene (Total)	3,000	5,000	2.0 U	2.0 U	NA	NA	2.0 U	NA	NA	1.0 U	NA	1.0 U	NA	2.0 U	2.0 U	2.0 U	5.0 U	2.0 U	10 U	2.0 U	5.0 U	2.0 U	2.0 U	10 U	2.0 U	2.0 U	2.0 U	NA	NA	NA	NA	NA
	cis-1,2-Dichloroethylene	20	50,000	**30**	**1.8**	NA	NA	1.0 U	NA	NA	**2.1**	NA	**6.1**	NA	**25**	**11**	**70**	**180**	**170**	**56**	**170**	**140**	**200**	**680**	**660**	**52**	**3.2**	**3.1**	NA	NA	NA	NA	NA
	1,2-Dichloroethene (total)	NS	NS	NA	NA	NA	NA	NA	NA	NA	**2.1**	NA	**8.0**	NA	NA	NA	NA	NA	NA	NA	NA	NA	NA	NA	NA	NA	NA	NA	NA	NA	NA	NA	NA
	Dibromomethane	NS	NS	2.0 U	2.0 U	NA	NA	2.0 U	NA	NA	2.0 U	NA	2.0 U	NA	2.0 U	2.0 U	2.0 U	5.0 U	2.0 U	10 U	2.0 U	5.0 U	2.0 U	2.0 U	10 U	2.0 U	2.0 U	2.0 U	NA	NA	NA	NA	NA
	1,2,3-Trichloropropane	NS	NS	2.0 U	2.0 U	NA	NA	2.0 U	NA	NA	2.0 U	NA	2.0 U	NA	2.0 U	2.0 U	2.0 U	5.0 U	2.0 U	10 U	2.0 U	5.0 U	2.0 U	2.0 U	10 U	2.0 U	2.0 U	2.0 U	NA	NA	NA	NA	NA
	Styrene	100	6,000	1.0 U	1.0 U	NA	NA	1.0 U	NA	NA	1.0 U	NA	1.0 U	NA	1.0 U	1.0 U	1.0 U	2.5 U	1.0 U	5.0 U	1.0 U	2.5 U	1.0 U	1.0 U	5.0 U	1.0 U	1.0 U	1.0 U	NA	NA	NA	NA	NA
	Dichlorodifluoromethane (Freon 12)	NS	NS	2.0 U	2.0 U	NA	NA	2.0 U	NA	NA	2.0 U	NA	2.0 U	NA	2.0 U	2.0 U	2.0 U	5.0 U	2.0 U	10 U	2.0 U	5.0 U	2.0 U	2.0 U	10 U	2.0 U	2.0 U	2.0 U	NA	NA	NA	NA	NA
	Acetone	50,000	50,000	**24**	5.0 U	NA	NA	5.0 U	NA	NA	5.0 U	NA	5.0 U	NA	5.0 U	5.0 U	5.0 U	12 U	5.0 U	25 U	5.0 U	12 U	5.0 U	5.0 U	25 U	5.0 U	5.0 U	5.0 U	NA	NA	NA	NA	NA
	Carbon Disulfide	NS	NS	2.0 U	2.0 U	NA	NA	2.0 U	NA	NA	2.0 U	NA	2.0 U	NA	2.0 U	2.0 U	2.0 U	5.0 U	2.0 U	10 U	2.0 U	5.0 U	2.0 U	2.0 U	10 U	2.0 U	2.0 U	2.0 U	NA	NA	NA	NA	NA
	2-Butanone (MEK)	50,000	50,000	5.0 U	5.0 U	NA	NA	5.0 U	NA	NA	5.0 U	NA	5.0 U	NA	5.0 U	5.0 U	5.0 U	12 U	5.0 U	25 U	5.0 U	12 U	5.0 U	5.0 U	25 U	5.0 U	5.0 U	5.0 U	NA	NA	NA	NA	NA
	4-Methyl-2-pentanone (MIBK)	50,000	50,000	5.0 U	5.0 U	NA	NA	5.0 U	NA	NA	5.0 U	NA	5.0 U	NA	5.0 U	5.0 U	5.0 U	12 U	5.0 U	25 U	5.0 U	12 U	5.0 U	5.0 U	25 U	5.0 U	5.0 U	5.0 U	NA	NA	NA	NA	NA
	2-Hexanone (MBK)	NS	NS	5.0 U	5.0 U	NA	NA	5.0 U	NA	NA	5.0 U	NA	5.0 U	NA	5.0 U	5.0 U	5.0 U	12 U	5.0 U	25 U	5.0 U	12 U	5.0 U	5.0 U	25 U	5.0 U	5.0 U	5.0 U	NA	NA	NA	NA	NA
	Bromochloromethane	NS	NS	2.0 U	2.0 U	NA	NA	2.0 U	NA	NA	2.0 U	NA	2.0 U	NA	2.0 U	2.0 U	2.0 U	5.0 U	2.0 U	10 U	2.0 U	5.0 U	2.0 U	2.0 U	10 U	2.0 U	2.0 U	2.0 U	NA	NA	NA	NA	NA
	Tetrahydrofuran	NS	NS	5.0 U	2.0 U	NA	NA	2.0 U	NA	NA	2.0 U	NA	2.0 U	NA	10 U	10 U	5.0 U	12 U	5.0 U	25 U	5.0 U	12 U	5.0 U	5.0 U	25 U	5.0 U	2.0 U	2.0 U	NA	NA	NA	NA	NA
	2,2-Dichloropropane	NS	NS	2.0 U	2.0 U	NA	NA	2.0 U	NA	NA	2.0 U	NA	2.0 U	NA	2.0 U	2.0 U	2.0 U	5.0 U	2.0 U	10 U	2.0 U	5.0 U	2.0 U	2.0 U	10 U	2.0 U	2.0 U	2.0 U	NA	NA	NA	NA	NA
	1,2-Dibromoethane (EDB)	2	50,000	2.0 U	2.0 U	NA	NA	2.0 U	NA	NA	2.0 U	NA	2.0 U	NA	2.0 U	2.0 U	2.0 U	5.0 U	2.0 U	10 U	2.0 U	5.0 U	2.0 U	2.0 U	10 U	2.0 U	2.0 U	2.0 U	NA	NA	NA	NA	NA
	1,3-Dichloropropane	NS	NS	2.0 U	2.0 U	NA	NA	2.0 U	NA	NA	2.0 U	NA	2.0 U	NA	2.0 U	2.0 U	2.0 U	5.0 U	2.0 U	10 U	2.0 U	5.0 U	2.0 U	2.0 U	10 U	2.0 U	2.0 U	2.0 U	NA	NA	NA	NA	NA
	1,1,1,2-Tetrachloroethane	10	50,000	1.0 U	1.0 U	NA	NA	1.0 U	NA	NA	1.0 U	NA	1.0 U	NA	1.0 U	1.0 U	1.0 U	2.5 U	1.0 U	5.0 U	1.0 U	2.5 U	1.0 U	1.0 U	5.0 U	1.0 U	1.0 U	1.0 U	NA	NA	NA	NA	NA
	Bromobenzene	NS	NS	2.0 U	2.0 U	NA	NA	2.0 U	NA	NA	2.0 U	NA	2.0 U	NA	2.0 U	2.0 U	2.0 U	5.0 U	2.0 U	10 U	2.0 U	5.0 U	2.0 U	2.0 U	10 U	2.0 U	2.0 U	2.0 U	NA	NA	NA	NA	NA
	n-Butylbenzene	4,000[1]	50,000[1]	2.0 U	2.0 U	NA	NA	2.0 U	NA	NA	2.0 U	NA	2.0 U	NA	2.0 U	2.0 U	2.0 U	5.0 U	2.0 U	10 U	2.0 U	5.0 U	2.0 U	2.0 U	10 U	2.0 U	2.0 U	2.0 U	NA	NA	NA	NA	NA
	sec-Butylbenzene	4,000[1]	50,000[1]	2.0 U	2.0 U	NA	NA	2.0 U	NA	NA	2.0 U	NA	2.0 U	NA	2.0 U	2.0 U	2.0 U	5.0 U	2.0 U	10 U	2.0 U	5.0 U	2.0 U	2.0 U	10 U	2.0 U	2.0 U	2.0 U	NA	NA	NA	NA	NA
	tert-Butylbenzene	4,000[1]	50,000[1]	2.0 U	2.0 U	NA	NA	2.0 U	NA	NA	2.0 U	NA	2.0 U	NA	2.0 U	2.0 U	2.0 U	5.0 U	2.0 U	10 U	2.0 U	5.0 U	2.0 U	2.0 U	10 U	2.0 U	2.0 U	2.0 U	NA	NA	NA	NA	NA
	2-Chlorotoluene	NS	NS	2.0 U	2.0 U	NA	NA	2.0 U	NA	NA	2.0 U	NA	2.0 U	NA	2.0 U	2.0 U	2.0 U	5.0 U	2.0 U	10 U	2.0 U	5.0 U	2.0 U	2.0 U	10 U	2.0 U	2.0 U	2.0 U	NA	NA	NA	NA	NA
	4-Chlorotoluene	NS	NS	2.0 U	2.0 U	NA	NA	2.0 U	NA	NA	2.0 U	NA	2.0 U	NA	2.0 U	2.0 U	2.0 U	5.0 U	2.0 U	10 U	2.0 U	5.0 U	2.0 U	2.0 U	10 U	2.0 U	2.0 U	2.0 U	NA	NA	NA	NA	NA
	1,2-Dibromo-3-chloropropane (DBCP)	NS	NS	2.0 U	2.0 U	NA	NA	2.0 U	NA	NA	2.0 U	NA	2.0 U	NA	2.0 U	2.0 U	2.0 U	5.0 U	2.0 U	10 U	2.0 U	5.0 U	2.0 U	2.0 U	10 U	2.0 U	2.0 U	2.0 U	NA	NA	NA	NA	NA
	Hexachlorobutadiene	50	3,000	0.60 U	0.60 U	NA	NA	0.60 U	NA	NA	0.60 U	NA	0.60 U	NA	0.60 U	0.60 U	0.60 U	1.5 U	0.60 U	3.0 U	0.60 U	1.5 U	0.60 U	0.60 U	3.0 U	0.60 U	0.60 U	0.60 U	NA	NA	NA	NA	NA
	Isopropylbenzene (Cumene)	4,000[1]	50,000[1]	2.0 U	2.0 U	NA	NA	2.0 U	NA	NA	2.0 U	NA	2.0 U	NA	2.0 U	2.0 U	2.0 U	5.0 U	2.0 U	10 U	2.0 U	5.0 U	2.0 U	2.0 U	10 U	2.0 U	2.0 U	2.0 U	NA	NA	NA	NA	NA
	p-Isopropyltoluene (p-Cymene)	4,000[1]	50,000[1]	2.0 U	2.0 U	NA	NA	2.0 U	NA	NA	2.0 U	NA	2.0 U	NA	2.0 U	2.0 U	2.0 U	5.0 U	2.0 U	10 U	2.0 U	5.0 U	2.0 U	2.0 U	10 U	2.0 U	2.0 U	2.0 U	NA	NA	NA	NA	NA
	Naphthalene	700	20,000	2.0 U	2.0 U	NA	NA	2.0 U	NA	NA	2.0 U	NA	2.0 U	NA	5.0 U	2.0 U	2.0 U	5.0 U	2.0 U	10 U	2.0 U	5.0 U	2.0 U	2.0 U	10 U	2.0 U	2.0 U	2.0 U	NA	NA	NA	NA	NA
	n-Propylbenzene	4,000[1]	50,000[1]	2.0 U	2.0 U	NA	NA	2.0 U	NA	NA	2.0 U	NA	2.0 U	NA	2.0 U	2.0 U	2.0 U	5.0 U	2.0 U	10 U	2.0 U	5.0 U	2.0 U	2.0 U	10 U	2.0 U	2.0 U	2.0 U	NA	NA	NA	NA	NA
	1,2,3-Trichlorobenzene	NS	NS	**2.4**	2.0 U	NA	NA	2.0 U	NA	NA	2.0 U	NA	2.0 U	NA	2.0 U	2.0 U	2.0 U	5.0 U	2.0 U	10 U	2.0 U	5.0 U	2.0 U	2.0 U	10 U	2.0 U	2.0 U	2.0 U	NA	NA	NA	NA	NA
	1,2,4-Trichlorobenzene	200	50,000	**18**	**2.9**	NA	NA	**2.7**	NA	NA	**2.8**	NA	2.0 U	NA	2.0 U	2.0 U	2.0 U	**1.3 J**	2.0 U	10 U	2.0 U	5.0 U	2.0 U	2.0 U	10 U	**2.4**	2.0 U	2.0 U	NA	NA	NA	NA	NA
	1,3,5-Trimethylbenzene	4,000[1]	50,000[1]	2.0 U	2.0 U	NA	NA	2.0 U	NA	NA	2.0 U	NA	2.0 U	NA	2.0 U	2.0 U	2.0 U	5.0 U	2.0 U	10 U	2.0 U	5.0 U	2.0 U	2.0 U	10 U	2.0 U	2.0 U	2.0 U	NA	NA	NA	NA	NA
	1,2,4-Trimethylbenzene	4,000[1]	50,000[1]	2.0 U	2.0 U	NA	NA	2.0 U	NA	NA	2.0 U	NA	2.0 U	NA	2.0 U	2.0 U	2.0 U	5.0 U	2.0 U	10 U	2.0 U	5.0 U	2.0 U	2.0 U	10 U	2.0 U	2.0 U	2.0 U	NA	NA	NA	NA	NA
	Diisopropyl Ether (DIPE)	NS	NS	2.0 U	2.0 U	NA	NA	2.0 U	NA	NA	2.0 U	NA	2.0 U	NA	2.0 U	2.0 U	2.0 U	5.0 U	2.0 U	10 U	2.0 U	5.0 U	2.0 U	2.0 U	10 U	2.0 U	2.0 U	2.0 U	NA	NA	NA	NA	NA
	tert-Butyl Ethyl Ether (TBEE)	NS	NS	2.0 U	2.0 U	NA	NA	2.0 U	NA	NA	2.0 U	NA	2.0 U	NA	2.0 U	2.0 U	2.0 U	5.0 U	2.0 U	10 U	2.0 U	5.0 U	2.0 U	2.0 U	10 U	2.0 U	2.0 U	2.0 U	NA	NA	NA	NA	NA
	tert-Amyl Methyl Ether (TAME)	NS	NS	2.0 U	2.0 U	NA	NA	2.0 U	NA	NA	2.0 U	NA	2.0 U	NA	2.0 U	2.0 U	2.0 U	5.0 U	2.0 U	10 U	2.0 U	5.0 U	2.0 U	2.0 U	10 U	2.0 U	2.0 U	2.0 U	NA	NA	NA	NA	NA
	1,4-Dioxane	6,000	50,000	250 U	250 U	NA	NA	250 U	NA	NA	250 U	NA	250 U	NA	250 U	250 U	250 U	620 U	250 U	1,200 U	250 U	620 U	250 U	250 U	1,200 U	250 U	250 U	250 U	NA	NA	NA	NA	NA
	Diethyl Ether	NS	NS	2.0 U	2.0 U	NA	NA	2.0 U	NA	NA	2.0 U	NA	2.0 U	NA	2.0 U	2.0 U	2.0 U	5.0 U	2.0 U	10 U	2.0 U	5.0 U	2.0 U	2.0 U	10 U	2.0 U	2.0 U	2.0 U	NA	NA	NA	NA	NA

Table 2
Summary of Analytical Results for Groundwater Samples --
2008 through 2015
New Bedford High School
New Bedford, Massachusetts

Analysis	Analyte		Sample ID:	MW-27R											MW-28																		
		Filter Size (micron)^:		N/A	N/A	0.45	0.20	N/A	0.45	0.20	N/A	0.45	N/A	0.45	N/A	N/A	N/A	N/A	N/A	N/A	N/A	N/A	N/A	N/A	N/A	N/A	N/A	N/A	2.0	2.0	0.45	0.45	0.20
		Sample Date:		12/14/2012	2/14/2014	2/14/2014	2/14/2014	2/21/2014	2/21/2014	2/21/2014	1/5/2015	1/5/2015	7/27/2015	7/27/2015	9/9/2010	10/21/2010	3/8/2011	3/25/2011	4/11/2011	4/28/2011	7/27/2011	8/2/2011	8/25/2011	2/27/2012	4/11/2012	12/13/2012	1/16/2014	1/16/2014	1/16/2014	1/16/2014	1/16/2014	1/16/2014	1/16/2014
		GW-2	GW-3																									Field Dup		Field Dup		Field Dup	**
PAHs																																	
(ug/L)	Acenaphthene	NS	10,000	NA	NA	NA	NA	NA	NA	NA	NA	NA	NA	NA	NA	NA	NA	NA	NA	NA	NA	NA	NA	NA	NA	NA	NA	NA	NA	NA	NA	NA	NA
	Acenaphthylene	10,000	40	NA	NA	NA	NA	NA	NA	NA	NA	NA	NA	NA	NA	NA	NA	NA	NA	NA	NA	NA	NA	NA	NA	NA	NA	NA	NA	NA	NA	NA	NA
	Anthracene	NS	30	NA	NA	NA	NA	NA	NA	NA	NA	NA	NA	NA	NA	NA	NA	NA	NA	NA	NA	NA	NA	NA	NA	NA	NA	NA	NA	NA	NA	NA	NA
	Benzo(a)anthracene	NS	1,000	NA	NA	NA	NA	NA	NA	NA	NA	NA	NA	NA	NA	NA	NA	NA	NA	NA	NA	NA	NA	NA	NA	NA	NA	NA	NA	NA	NA	NA	NA
	Benzo(a)pyrene	NS	500	NA	NA	NA	NA	NA	NA	NA	NA	NA	NA	NA	NA	NA	NA	NA	NA	NA	NA	NA	NA	NA	NA	NA	NA	NA	NA	NA	NA	NA	NA
	Benzo(b)fluoranthene	NS	400	NA	NA	NA	NA	NA	NA	NA	NA	NA	NA	NA	NA	NA	NA	NA	NA	NA	NA	NA	NA	NA	NA	NA	NA	NA	NA	NA	NA	NA	NA
	Benzo(g,h,i)perylene	NS	20	NA	NA	NA	NA	NA	NA	NA	NA	NA	NA	NA	NA	NA	NA	NA	NA	NA	NA	NA	NA	NA	NA	NA	NA	NA	NA	NA	NA	NA	NA
	Benzo(k)fluoranthene	NS	100	NA	NA	NA	NA	NA	NA	NA	NA	NA	NA	NA	NA	NA	NA	NA	NA	NA	NA	NA	NA	NA	NA	NA	NA	NA	NA	NA	NA	NA	NA
	Chrysene	NS	70	NA	NA	NA	NA	NA	NA	NA	NA	NA	NA	NA	NA	NA	NA	NA	NA	NA	NA	NA	NA	NA	NA	NA	NA	NA	NA	NA	NA	NA	NA
	Dibenz(a,h)anthracene	NS	40	NA	NA	NA	NA	NA	NA	NA	NA	NA	NA	NA	NA	NA	NA	NA	NA	NA	NA	NA	NA	NA	NA	NA	NA	NA	NA	NA	NA	NA	NA
	Fluoranthene	NS	200	NA	NA	NA	NA	NA	NA	NA	NA	NA	NA	NA	NA	NA	NA	NA	NA	NA	NA	NA	NA	NA	NA	NA	NA	NA	NA	NA	NA	NA	NA
	Fluorene	NS	40	NA	NA	NA	NA	NA	NA	NA	NA	NA	NA	NA	NA	NA	NA	NA	NA	NA	NA	NA	NA	NA	NA	NA	NA	NA	NA	NA	NA	NA	NA
	Indeno(1,2,3-cd)pyrene	NS	100	NA	NA	NA	NA	NA	NA	NA	NA	NA	NA	NA	NA	NA	NA	NA	NA	NA	NA	NA	NA	NA	NA	NA	NA	NA	NA	NA	NA	NA	NA
	2-Methylnaphthalene	2,000	20,000	NA	NA	NA	NA	NA	NA	NA	NA	NA	NA	NA	NA	NA	NA	NA	NA	NA	NA	NA	NA	NA	NA	NA	NA	NA	NA	NA	NA	NA	NA
	Naphthalene	700	20,000	NA	NA	NA	NA	NA	NA	NA	NA	NA	NA	NA	NA	NA	NA	NA	NA	NA	NA	NA	NA	NA	NA	NA	NA	NA	NA	NA	NA	NA	NA
	Phenanthrene	NS	10,000	NA	NA	NA	NA	NA	NA	NA	NA	NA	NA	NA	NA	NA	NA	NA	NA	NA	NA	NA	NA	NA	NA	NA	NA	NA	NA	NA	NA	NA	NA
	Pyrene	NS	20	NA	NA	NA	NA	NA	NA	NA	NA	NA	NA	NA	NA	NA	NA	NA	NA	NA	NA	NA	NA	NA	NA	NA	NA	NA	NA	NA	NA	NA	NA
PCBs																																	
(ug/L)	Aroclor 1016	NS	NS	50 U	0.500 U	0.250 U	0.250 U	0.250 U	0.250 U	0.250 U	1.25 U	0.250 U	0.250 U	0.250 U	NA	NA	NA	NA	NA	NA	NA	NA	1.10 U	2.0 U	0.500 U	1.0 U	NA	NA	1.25 U	1.25 U	0.250 U	0.250 U	0.258 U
	Aroclor 1221	NS	NS	50 U	0.500 U	0.250 U	0.250 U	0.250 U	0.250 U	0.250 U	1.25 U	0.250 U	0.250 U	0.250 U	NA	NA	NA	NA	NA	NA	NA	NA	1.10 U	2.0 U	**3.31 J**	1.0 U	NA	NA	1.25 U	1.25 U	0.250 U	0.250 U	0.258 U
	Aroclor 1232	NS	NS	50 U	0.500 U	0.250 U	0.250 U	0.250 U	0.250 U	0.250 U	1.25 U	0.250 U	0.250 U	0.250 U	NA	NA	NA	NA	NA	NA	NA	NA	1.10 U	2.0 U	0.500 U	1.0 U	NA	NA	1.25 U	1.25 U	0.250 U	0.250 U	0.258 U
	Aroclor 1242	NS	NS	50 U	0.500 U	0.250 U	0.250 U	0.250 U	0.250 U	0.250 U	**3.43**	0.250 U	0.250 U	0.250 U	NA	NA	NA	NA	NA	NA	NA	NA	**3.98**	2.0 U	0.500 U	**8.13**	NA	NA	1.25 U	1.25 U	0.250 U	0.250 U	0.258 U
	Aroclor 1248	NS	NS	50 U	0.500 U	0.250 U	0.250 U	0.250 U	0.250 U	0.250 U	1.25 U	0.250 U	0.250 U	0.250 U	NA	NA	NA	NA	NA	NA	NA	NA	1.10 U	**7.85**	**6.12 J**	1.0 U	NA	NA	1.25 U	1.25 U	0.250 U	0.250 U	0.258 U
	Aroclor 1254	NS	NS	**1,060**	**6.95**	0.250 U	0.250 U	**5.26**	0.250 U	0.250 U	**13.1**	**0.796**	**1.23**	0.250 U	NA	NA	NA	NA	NA	NA	NA	NA	**10.9**	**9.53**	**5.59 J**	**11.0**	NA	NA	**8.93**	**9.33**	0.250 U	0.250 U	0.258 U
	Aroclor 1260	NS	NS	50 U	0.500 U	0.250 U	0.250 U	0.250 U	0.250 U	0.250 U	1.25 U	0.250 U	0.250 U	0.250 U	NA	NA	NA	NA	NA	NA	NA	NA	1.10 U	2.0 U	0.500 U	1.0 U	NA	NA	1.25 U	1.25 U	0.250 U	0.250 U	0.258 U
	Aroclor 1262	NS	NS	50 U	0.500 U	0.250 U	0.250 U	0.250 U	0.250 U	0.250 U	1.25 U	0.250 U	0.250 U	0.250 U	NA	NA	NA	NA	NA	NA	NA	NA	NA	NA	NA	1.0 U	NA	NA	1.25 U	1.25 U	0.250 U	0.250 U	0.258 U
	Aroclor 1268	NS	NS	50 U	0.500 U	0.250 U	0.250 U	0.250 U	0.250 U	0.250 U	1.25 U	0.250 U	0.250 U	0.250 U	NA	NA	NA	NA	NA	NA	NA	NA	NA	NA	NA	1.0 U	NA	NA	1.25 U	1.25 U	0.250 U	0.250 U	0.258 U
	Total PCBs	5	10	**1,060**	**6.95**	0.250 U	0.250 U	**5.26**	0.250 U	0.250 U	**16.5**	**0.796**	**1.23**	0.250 U	NA	NA	NA	NA	NA	NA	NA	NA	**14.88**	**17.38**	**15.02 J**	**19.13**	NA	NA	**8.93**	**9.33**	0.250 U	0.250 U	0.258 U
Total Petroleum Hydrocarbons																																	
(ug/L)	Total Petroleum Hydrocarbons (C9-C44)	5,000	5,000	NA	NA	NA	NA	NA	NA	NA	NA	NA	NA	NA	NA	NA	NA	NA	NA	NA	NA	NA	NA	NA	NA	NA	NA	NA	NA	NA	NA	NA	NA
Metals, total																																	
(ug/L)	Antimony	NS	8,000	NA	NA	NA	NA	NA	NA	NA	NA	NA	NA	NA	NA	NA	NA	NA	NA	NA	NA	NA	NA	NA	NA	NA	NA	NA	NA	NA	NA	NA	NA
	Arsenic	NS	900	NA	NA	NA	NA	NA	NA	NA	NA	NA	NA	NA	NA	NA	NA	NA	NA	NA	NA	NA	NA	NA	NA	NA	NA	NA	NA	NA	NA	NA	NA
	Barium	NS	50,000	NA	NA	NA	NA	NA	NA	NA	NA	NA	NA	NA	NA	NA	NA	NA	NA	NA	NA	NA	NA	NA	NA	NA	NA	NA	NA	NA	NA	NA	NA
	Beryllium	NS	200	NA	NA	NA	NA	NA	NA	NA	NA	NA	NA	NA	NA	NA	NA	NA	NA	NA	NA	NA	NA	NA	NA	NA	NA	NA	NA	NA	NA	NA	NA
	Cadmium	NS	4	NA	NA	NA	NA	NA	NA	NA	NA	NA	NA	NA	NA	NA	NA	NA	NA	NA	NA	NA	NA	NA	NA	NA	NA	NA	NA	NA	NA	NA	NA
	Chromium	NS	300	NA	NA	NA	NA	NA	NA	NA	NA	NA	NA	NA	NA	NA	NA	NA	NA	NA	NA	NA	NA	NA	NA	NA	NA	NA	NA	NA	NA	NA	NA
	Lead	NS	10	NA	NA	NA	NA	NA	NA	NA	NA	NA	NA	NA	NA	NA	NA	NA	NA	NA	NA	NA	NA	NA	NA	NA	NA	NA	NA	NA	NA	NA	NA
	Mercury	NS	20	NA	NA	NA	NA	NA	NA	NA	NA	NA	NA	NA	NA	NA	NA	NA	NA	NA	NA	NA	NA	NA	NA	NA	NA	NA	NA	NA	NA	NA	NA
	Nickel	NS	200	NA	NA	NA	NA	NA	NA	NA	NA	NA	NA	NA	NA	NA	NA	NA	NA	NA	NA	NA	NA	NA	NA	NA	NA	NA	NA	NA	NA	NA	NA
	Selenium	NS	100	NA	NA	NA	NA	NA	NA	NA	NA	NA	NA	NA	NA	NA	NA	NA	NA	NA	NA	NA	NA	NA	NA	NA	NA	NA	NA	NA	NA	NA	NA
	Silver	NS	7	NA	NA	NA	NA	NA	NA	NA	NA	NA	NA	NA	NA	NA	NA	NA	NA	NA	NA	NA	NA	NA	NA	NA	NA	NA	NA	NA	NA	NA	NA
	Thallium	NS	3,000	NA	NA	NA	NA	NA	NA	NA	NA	NA	NA	NA	NA	NA	NA	NA	NA	NA	NA	NA	NA	NA	NA	NA	NA	NA	NA	NA	NA	NA	NA
	Vanadium	NS	4,000	NA	NA	NA	NA	NA	NA	NA	NA	NA	NA	NA	NA	NA	NA	NA	NA	NA	NA	NA	NA	NA	NA	NA	NA	NA	NA	NA	NA	NA	NA
	Zinc	NS	900	NA	NA	NA	NA	NA	NA	NA	NA	NA	NA	NA	NA	NA	NA	NA	NA	NA	NA	NA	NA	NA	NA	NA	NA	NA	NA	NA	NA	NA	NA
Metals, dissolved																																	
(ug/L)	Antimony	NS	8,000	NA	NA	NA	NA	NA	NA	NA	NA	NA	NA	NA	NA	NA	NA	NA	NA	NA	NA	NA	NA	NA	NA	NA	NA	NA	NA	NA	NA	NA	NA
	Arsenic	NS	900	NA	NA	NA	NA	NA	NA	NA	NA	NA	NA	NA	NA	NA	NA	NA	NA	NA	NA	NA	NA	NA	NA	NA	NA	NA	NA	NA	NA	NA	NA
	Barium	NS	50,000	NA	NA	NA	NA	NA	NA	NA	NA	NA	NA	NA	NA	NA	NA	NA	NA	NA	NA	NA	NA	NA	NA	NA	NA	NA	NA	NA	NA	NA	NA
	Beryllium	NS	200	NA	NA	NA	NA	NA	NA	NA	NA	NA	NA	NA	NA	NA	NA	NA	NA	NA	NA	NA	NA	NA	NA	NA	NA	NA	NA	NA	NA	NA	NA
	Cadmium	NS	4	NA	NA	NA	NA	NA	NA	NA	NA	NA	NA	NA	NA	NA	NA	NA	NA	NA	NA	NA	NA	NA	NA	NA	NA	NA	NA	NA	NA	NA	NA
	Chromium	NS	300	NA	NA	NA	NA	NA	NA	NA	NA	NA	NA	NA	NA	NA	NA	NA	NA	NA	NA	NA	NA	NA	NA	NA	NA	NA	NA	NA	NA	NA	NA
	Lead	NS	10	NA	NA	NA	NA	NA	NA	NA	NA	NA	NA	NA	NA	NA	NA	NA	NA	NA	NA	NA	NA	NA	NA	NA	NA	NA	NA	NA	NA	NA	NA
	Mercury	NS	20	NA	NA	NA	NA	NA	NA	NA	NA	NA	NA	NA	NA	NA	NA	NA	NA	NA	NA	NA	NA	NA	NA	NA	NA	NA	NA	NA	NA	NA	NA
	Nickel	NS	200	NA	NA	NA	NA	NA	NA	NA	NA	NA	NA	NA	NA	NA	NA	NA	NA	NA	NA	NA	NA	NA	NA	NA	NA	NA	NA	NA	NA	NA	NA
	Selenium	NS	100	NA	NA	NA	NA	NA	NA	NA	NA	NA	NA	NA	NA	NA	NA	NA	NA	NA	NA	NA	NA	NA	NA	NA	NA	NA	NA	NA	NA	NA	NA
	Silver	NS	7	NA	NA	NA	NA	NA	NA	NA	NA	NA	NA	NA	NA	NA	NA	NA	NA	NA	NA	NA	NA	NA	NA	NA	NA	NA	NA	NA	NA	NA	NA
	Thallium	NS	3,000	NA	NA	NA	NA	NA	NA	NA	NA	NA	NA	NA	NA	NA	NA	NA	NA	NA	NA	NA	NA	NA	NA	NA	NA	NA	NA	NA	NA	NA	NA
	Vanadium	NS	4,000	NA	NA	NA	NA	NA	NA	NA	NA	NA	NA	NA	NA	NA	NA	NA	NA	NA	NA	NA	NA	NA	NA	NA	NA	NA	NA	NA	NA	NA	NA
	Zinc	NS	900	NA	NA	NA	NA	NA	NA	NA	NA	NA	NA	NA	NA	NA	NA	NA	NA	NA	NA	NA	NA	NA	NA	NA	NA	NA	NA	NA	NA	NA	NA
General Chemistry																																	
(ug/L)	Nitrogen, Nitrate	NS	NS	NA	NA	NA	NA	NA	NA	NA	NA	NA	NA	NA	100 U	NA	NA	NA	NA	NA	NA	NA	NA	NA	NA	NA	NA	NA	NA	NA	NA	NA	NA
	Sulfate	NS	NS	NA	NA	NA	NA	NA	NA	NA	NA	NA	NA	NA	**13,000**	NA	NA	NA	NA	NA	NA	NA	NA	NA	NA	NA	NA	NA	NA	NA	NA	NA	NA
	Total Organic Carbon	NS	NS	NA	NA	NA	NA	NA	NA	NA	NA	NA	NA	NA	**5,200**	NA	NA	NA	NA	NA	NA	NA	NA	NA	NA	NA	NA	NA	NA	NA	NA	NA	NA

Notes:
ug/L - micrograms per liter.
B - Compound detected in associated method blank
J - Estimated value.
NA - Sample not analyzed for the listed analyte.
N/A - Not applicable.
NS - No MassDEP standards exist for this compound.
U - Compound was not detected at specified quantitation limit.
Values in **Bold** indicate the compound was detected.
VOCs - Volatile Organic Compounds.
PAHs - Polynuclear Aromatic Hydrocarbons.
PCBs - Polychlorinated Biphenyls.
(1) - MassDEP Method 1 standards for C9-C10 aromatic hydrocarbons used.
(2) - MassDEP Method 1 standards for 1,3-Dichloropropene used.
(3) - criteria applicable to xylene (total), the sum of the xylene isomers.
^ - 0.45 micron filtration done in field; 0.20 and 2.0 micron filtration performed in lab.
* - Sample collected on 4/10/2012 for PCB analysis was broken and was recollected on 4/18/2012.
** - Lab filtered sample using a 2.0 micron filter and then filtered a second time using a 0.20 micron fil

Table 2
Summary of Analytical Results for Groundwater Samples --
2008 through 2015
New Bedford High School
New Bedford, Massachusetts

Analysis	Analyte		Sample ID:	MW-28						MW-29		MW-30	MW-31					MW-32									
		Filter Size (micron)^:		N/A	0.45	N/A	0.45	N/A	0.45	N/A	N/A	N/A	N/A	N/A	N/A	N/A	N/A	N/A	N/A	N/A	N/A	N/A	N/A	N/A	N/A	N/A	N/A
		Sample Date:		2/21/2014	2/21/2014	1/5/2015	1/5/2015	7/27/2015	7/27/2015	9/10/2010	4/10/2012	10/22/2010	10/21/2010	3/8/2011	4/11/2011	8/24/2011	4/10/2012 *	10/21/2010	3/8/2011	3/25/2011	3/25/2011 Field Dup	4/8/2011	4/8/2011 Field Dup	4/28/2011	7/27/2011	8/2/2011	8/2/2011 Field Dup
		GW-2	GW-3																								
VOCs																											
(ug/L)	Methylene Chloride	2,000	50,000	2.0 U	NA	2.0 U	NA	2.0 U	NA	2.0 U	2.0 U	2.0 U	2.0 U	2.0 U	2.0 U	2.0 U	2.0 U	2.0 U	1,000 U	200 U	200 U	400 U	400 U	400 U	100 U	50 U	100 U
	1,1-Dichloroethane	2,000	20,000	1.0 U	NA	1.0 U	NA	1.0 U	NA	1.0 U	1.0 U	1.0 U	1.0 U	1.0 U	1.0 U	1.0 U	1.0 U	1.0 U	500 U	100 U	100 U	200 U	200 U	200 U	50 U	25 U	50 U
	Chloroform	50	20,000	1.0 U	NA	1.0 U	NA	1.0 U	NA	1.0 U	1.0 U	1.0 U	1.0 U	1.0 U	1.0 U	1.0 U	1.0 U	1.0 U	500 U	100 U	100 U	200 U	200 U	200 U	50 U	25 U	50 U
	Carbon Tetrachloride	2	5,000	1.0 U	NA	1.0 U	NA	1.0 U	NA	1.0 U	1.0 U	1.0 U	1.0 U	1.0 U	1.0 U	1.0 U	1.0 U	1.0 U	500 U	100 U	100 U	200 U	200 U	200 U	50 U	25 U	50 U
	1,2-Dichloropropane	3	50,000	1.0 U	NA	1.0 U	NA	1.0 U	NA	1.0 U	1.0 U	1.0 U	1.0 U	1.0 U	1.0 U	1.0 U	1.0 U	1.0 U	500 U	100 U	100 U	200 U	200 U	200 U	50 U	25 U	50 U
	Chlorodibromomethane	20	50,000	1.0 U	NA	1.0 U	NA	1.0 U	NA	1.0 U	1.0 U	1.0 U	1.0 U	1.0 U	1.0 U	1.0 U	1.0 U	1.0 U	500 U	100 U	100 U	200 U	200 U	200 U	50 U	25 U	50 U
	1,1,2-Trichloroethane	900	50,000	1.0 U	NA	1.0 U	NA	1.0 U	NA	1.0 U	1.0 U	1.0 U	1.0 U	1.0 U	1.0 U	1.0 U	1.0 U	1.0 U	500 U	100 U	100 U	200 U	200 U	200 U	50 U	25 U	50 U
	Tetrachloroethylene	50	30,000	1.0 U	NA	1.0 U	NA	1.0 U	NA	1.0 U	1.0 U	1.0 U	1.0 U	1.0 U	1.0 U	1.0 U	1.0 U	1.0 U	500 U	100 U	100 U	200 U	200 U	200 U	50 U	25 U	50 U
	Chlorobenzene	200	1,000	1.0 U	NA	1.0 U	NA	**5.2**	NA	1.0 U	1.0 U	1.0 U	1.0 U	1.0 U	1.0 U	1.0 U	1.0 U	1.0 U	500 U	100 U	100 U	200 U	200 U	200 U	50 U	25 U	50 U
	Trichlorofluoromethane (Freon 11)	NS	NS	2.0 U	NA	2.0 U	NA	2.0 U	NA	2.0 U	2.0 U	2.0 U	2.0 U	2.0 U	2.0 U	2.0 U	2.0 U	2.0 U	1,000 U	200 U	200 U	400 U	400 U	400 U	100 U	50 U	100 U
	1,2-Dichloroethane	5	20,000	1.0 U	NA	1.0 U	NA	1.0 U	NA	1.0 U	1.0 U	1.0 U	1.0 U	1.0 U	1.0 U	1.0 U	1.0 U	1.0 U	500 U	100 U	100 U	200 U	200 U	200 U	50 U	25 U	50 U
	1,1,1-Trichloroethane	4,000	20,000	1.0 U	NA	1.0 U	NA	1.0 U	NA	1.0 U	1.0 U	1.0 U	1.0 U	1.0 U	1.0 U	1.0 U	1.0 U	1.0 U	500 U	100 U	100 U	200 U	200 U	200 U	50 U	25 U	50 U
	Bromodichloromethane	6	50,000	1.0 U	NA	1.0 U	NA	1.0 U	NA	1.0 U	1.0 U	1.0 U	1.0 U	1.0 U	1.0 U	1.0 U	1.0 U	1.0 U	500 U	100 U	100 U	200 U	200 U	200 U	50 U	25 U	50 U
	trans-1,3-Dichloropropene	10[2]	200[2]	0.50 U	NA	0.50 U	NA	0.50 U	NA	0.50 U	0.50 U	0.50 U	0.50 U	0.50 U	0.50 U	0.50 U	0.50 U	0.50 U	250 U	50 U	50 U	100 U	100 U	100 U	25 U	12 U	25 U
	cis-1,3-Dichloropropene	10[2]	200[2]	0.50 U	NA	0.50 U	NA	0.50 U	NA	0.50 U	0.50 U	0.50 U	0.50 U	0.50 U	0.50 U	0.50 U	0.50 U	0.50 U	250 U	50 U	50 U	100 U	100 U	100 U	25 U	12 U	25 U
	1,3-Dichloropropene, Total	10	200	NA	NA	0.50 U	NA	0.50 U	NA	NA	NA	NA	NA	NA	NA	NA	NA	NA	NA	NA	NA	NA	NA	NA	NA	NA	NA
	1,1-Dichloropropene	NS	NS	2.0 U	NA	2.0 U	NA	2.0 U	NA	2.0 U	2.0 U	2.0 U	2.0 U	2.0 U	2.0 U	2.0 U	2.0 U	2.0 U	1,000 U	200 U	200 U	400 U	400 U	400 U	100 U	50 U	100 U
	Bromoform	700	50,000	2.0 U	NA	2.0 U	NA	2.0 U	NA	2.0 U	2.0 U	2.0 U	2.0 U	2.0 U	2.0 U	2.0 U	2.0 U	2.0 U	1,000 U	200 U	200 U	400 U	400 U	400 U	100 U	50 U	100 U
	1,1,2,2-Tetrachloroethane	9	50,000	1.0 U	NA	1.0 U	NA	1.0 U	NA	1.0 U	1.0 U	1.0 U	1.0 U	1.0 U	1.0 U	1.0 U	1.0 U	1.0 U	500 U	100 U	100 U	200 U	200 U	200 U	50 U	25 U	50 U
	Benzene	1,000	10,000	0.50 U	NA	0.50 U	NA	0.50 U	NA	1.0 U	0.50 U	1.0 U	1.0 U	1.0 U	1.0 U	0.50 U	0.50 U	1.0 U	500 U	100 U	100 U	200 U	200 U	200 U	25 U	12 U	25 U
	Toluene	50,000	40,000	1.0 U	NA	1.0 U	NA	1.0 U	NA	1.0 U	1.0 U	1.0 U	1.0 U	1.0 U	1.0 U	1.0 U	1.0 U	1.0 U	500 U	100 U	100 U	200 U	200 U	200 U	50 U	25 U	50 U
	Ethylbenzene	20,000	5,000	1.0 U	NA	1.0 U	NA	1.0 U	NA	1.0 U	1.0 U	1.0 U	1.0 U	1.0 U	1.0 U	1.0 U	1.0 U	1.0 U	500 U	100 U	100 U	200 U	200 U	200 U	50 U	25 U	50 U
	Chloromethane	NS	NS	2.0 U	NA	2.0 U	NA	2.0 U	NA	2.0 U	2.0 U	2.0 U	2.0 U	2.0 U	2.0 U	2.0 U	2.0 U	2.0 U	1,000 U	200 U	200 U	400 U	400 U	400 U	100 U	50 U	100 U
	Bromomethane	7	800	2.0 U	NA	2.0 U	NA	2.0 U	NA	2.0 U	2.0 U	2.0 U	2.0 U	2.0 U	2.0 U	2.0 U	2.0 U	2.0 U	1,000 U	200 U	200 U	400 U	400 U	400 U	100 U	50 U	100 U
	Vinyl Chloride	2	50,000	1.0 U	NA	1.0 U	NA	**17**	NA	1.0 U	1.0 U	1.0 U	1.0 U	1.0 U	1.0 U	1.0 U	1.0 U	1.0 U	500 U	100 U	100 U	200 U	200 U	200 U	50 U	25 U	50 U
	Chloroethane	NS	NS	2.0 U	NA	2.0 U	NA	2.0 U	NA	2.0 U	2.0 U	2.0 U	2.0 U	2.0 U	2.0 U	2.0 U	2.0 U	2.0 U	1,000 U	200 U	200 U	400 U	400 U	400 U	100 U	50 U	100 U
	1,1-Dichloroethylene	80	30,000	1.0 U	NA	1.0 U	NA	1.0 U	NA	1.0 U	1.0 U	1.0 U	1.0 U	1.0 U	1.0 U	1.0 U	1.0 U	1.0 U	500 U	100 U	100 U	200 U	200 U	200 U	50 U	25 U	50 U
	trans-1,2-Dichloroethylene	80	50,000	1.0 U	NA	1.0 U	NA	**2.8**	NA	1.0 U	1.0 U	1.0 U	1.0 U	1.0 U	1.0 U	1.0 U	1.0 U	1.0 U	500 U	**230**	**220**	200 U	200 U	200 U	50 U	**27**	50 U
	Trichloroethylene	5	5,000	**21**	NA	**20**	NA	**3.5**	NA	**1.2**	1.0 U	1.0 U	1.0 U	1.0 U	1.0 U	1.0 U	1.0 U	**1.1**	**17,000**	**26,000**	**26,000**	**21,000**	**21,000**	**4,700**	**2,600**	**2,500**	**2,000**
	1,2-Dichlorobenzene	8,000	2,000	1.0 U	NA	1.0 U	NA	1.0 U	NA	1.0 U	1.0 U	1.0 U	1.0 U	1.0 U	1.0 U	1.0 U	1.0 U	1.0 U	500 U	100 U	100 U	200 U	200 U	200 U	50 U	25 U	50 U
	1,3-Dichlorobenzene	6,000	50,000	1.0 U	NA	1.0 U	NA	**1.2**	NA	1.0 U	1.0 U	1.0 U	1.0 U	1.0 U	1.0 U	1.0 U	1.0 U	1.0 U	500 U	100 U	100 U	200 U	200 U	200 U	50 U	25 U	50 U
	1,4-Dichlorobenzene	60	8,000	**2.8**	NA	**2.1**	NA	**6.7**	NA	1.0 U	1.0 U	1.0 U	1.0 U	1.0 U	1.0 U	1.0 U	1.0 U	1.0 U	500 U	100 U	100 U	200 U	200 U	200 U	50 U	25 U	50 U
	Methyl tert-Butyl Ether (MTBE)	50,000	50,000	2.0 U	NA	2.0 U	NA	2.0 U	NA	2.0 U	2.0 U	2.0 U	2.0 U	2.0 U	2.0 U	2.0 U	2.0 U	2.0 U	1,000 U	200 U	200 U	400 U	400 U	400 U	100 U	50 U	100 U
	m+p Xylene	3,000[3]	5,000[3]	2.0 U	NA	2.0 U	NA	2.0 U	NA	2.0 U	2.0 U	2.0 U	2.0 U	2.0 U	2.0 U	2.0 U	2.0 U	2.0 U	1,000 U	200 U	200 U	400 U	400 U	400 U	100 U	50 U	100 U
	o-Xylene	3,000[3]	5,000[3]	1.0 U	NA	1.0 U	NA	1.0 U	NA	1.0 U	1.0 U	1.0 U	1.0 U	1.0 U	1.0 U	1.0 U	1.0 U	1.0 U	500 U	100 U	100 U	200 U	200 U	200 U	50 U	25 U	50 U
	Xylene (Total)	3,000	5,000	2.0 U	NA	1.0 U	NA	1.0 U	NA	2.0 U	2.0 U	2.0 U	2.0 U	2.0 U	2.0 U	2.0 U	2.0 U	2.0 U	1,000 U	200 U	200 U	400 U	400 U	400 U	100 U	50 U	100 U
	cis-1,2-Dichloroethylene	20	50,000	**2.6**	NA	**1.8**	NA	**11**	NA	1.0 U	1.0 U	1.0 U	1.0 U	1.0 U	1.0 U	1.0 U	1.0 U	**4.5**	**910**	**980**	**1,000**	**480**	**470**	**250**	**200**	**220**	**180**
	1,2-Dichloroethene (total)	NS	NS	NA	NA	**1.8**	NA	**14**	NA	NA	NA	NA	NA	NA	NA	NA	NA	NA	NA	NA	NA	NA	NA	NA	NA	NA	NA
	Dibromomethane	NS	NS	2.0 U	NA	2.0 U	NA	2.0 U	NA	2.0 U	2.0 U	2.0 U	2.0 U	2.0 U	2.0 U	2.0 U	2.0 U	2.0 U	1,000 U	200 U	200 U	400 U	400 U	400 U	100 U	50 U	100 U
	1,2,3-Trichloropropane	NS	NS	2.0 U	NA	2.0 U	NA	2.0 U	NA	2.0 U	2.0 U	2.0 U	2.0 U	2.0 U	2.0 U	2.0 U	2.0 U	2.0 U	1,000 U	200 U	200 U	400 U	400 U	400 U	100 U	50 U	100 U
	Styrene	100	6,000	1.0 U	NA	1.0 U	NA	1.0 U	NA	1.0 U	1.0 U	1.0 U	1.0 U	1.0 U	1.0 U	1.0 U	1.0 U	1.0 U	500 U	100 U	100 U	200 U	200 U	200 U	50 U	25 U	50 U
	Dichlorodifluoromethane (Freon 12)	NS	NS	2.0 U	NA	2.0 U	NA	2.0 U	NA	2.0 U	2.0 U	2.0 U	2.0 U	2.0 U	2.0 U	2.0 U	2.0 U	2.0 U	1,000 U	200 U	200 U	400 U	400 U	400 U	100 U	50 U	100 U
	Acetone	50,000	50,000	5.0 U	NA	5.0 U	NA	5.0 U	NA	5.0 U	5.0 U	5.0 U	5.0 U	5.0 U	5.0 U	5.0 U	5.0 U	5.0 U	2,500 U	500 U	500 U	1,000 U	1,000 U	1,000 U	250 U	120 U	250 U
	Carbon Disulfide	NS	NS	2.0 U	NA	2.0 U	NA	2.0 U	NA	2.0 U	2.0 U	2.0 U	2.0 U	2.0 U	2.0 U	2.0 U	2.0 U	2.0 U	1,000 U	200 U	200 U	400 U	400 U	400 U	100 U	50 U	100 U
	2-Butanone (MEK)	50,000	50,000	5.0 U	NA	5.0 U	NA	5.0 U	NA	5.0 U	5.0 U	5.0 U	5.0 U	5.0 U	5.0 U	5.0 U	5.0 U	5.0 U	2,500 U	500 U	500 U	1,000 U	1,000 U	1,000 U	250 U	120 U	250 U
	4-Methyl-2-pentanone (MIBK)	50,000	50,000	5.0 U	NA	5.0 U	NA	5.0 U	NA	5.0 U	5.0 U	5.0 U	5.0 U	5.0 U	5.0 U	5.0 U	5.0 U	5.0 U	2,500 U	500 U	500 U	1,000 U	1,000 U	1,000 U	250 U	120 U	250 U
	2-Hexanone (MBK)	NS	NS	5.0 U	NA	5.0 U	NA	5.0 U	NA	5.0 U	5.0 U	5.0 U	5.0 U	5.0 U	5.0 U	5.0 U	5.0 U	5.0 U	2,500 U	500 U	500 U	1,000 U	1,000 U	1,000 U	250 U	120 U	250 U
	Bromochloromethane	NS	NS	2.0 U	NA	2.0 U	NA	2.0 U	NA	2.0 U	2.0 U	2.0 U	2.0 U	2.0 U	2.0 U	2.0 U	2.0 U	2.0 U	1,000 U	200 U	200 U	400 U	400 U	400 U	100 U	50 U	100 U
	Tetrahydrofuran	NS	NS	2.0 U	NA	2.0 U	NA	2.0 U	NA	10 U	5.0 U	10 U	10 U	5.0 U	5.0 U	5.0 U	5.0 U	10 U	2,500 U	500 U	500 U	1,000 U	1,000 U	1,000 U	250 U	120 U	250 U
	2,2-Dichloropropane	NS	NS	2.0 U	NA	2.0 U	NA	2.0 U	NA	2.0 U	2.0 U	2.0 U	2.0 U	2.0 U	2.0 U	2.0 U	2.0 U	2.0 U	1,000 U	200 U	200 U	400 U	400 U	400 U	100 U	50 U	100 U
	1,2-Dibromoethane (EDB)	2	50,000	2.0 U	NA	2.0 U	NA	2.0 U	NA	2.0 U	2.0 U	2.0 U	2.0 U	2.0 U	2.0 U	2.0 U	2.0 U	2.0 U	1,000 U	200 U	200 U	400 U	400 U	400 U	100 U	50 U	100 U
	1,3-Dichloropropane	NS	NS	2.0 U	NA	2.0 U	NA	2.0 U	NA	2.0 U	2.0 U	2.0 U	2.0 U	2.0 U	2.0 U	2.0 U	2.0 U	2.0 U	1,000 U	200 U	200 U	400 U	400 U	400 U	100 U	50 U	100 U
	1,1,1,2-Tetrachloroethane	10	50,000	1.0 U	NA	1.0 U	NA	1.0 U	NA	1.0 U	1.0 U	1.0 U	1.0 U	1.0 U	1.0 U	1.0 U	1.0 U	1.0 U	500 U	100 U	100 U	200 U	200 U	200 U	50 U	25 U	50 U
	Bromobenzene	NS	NS	2.0 U	NA	2.0 U	NA	2.0 U	NA	2.0 U	2.0 U	2.0 U	2.0 U	2.0 U	2.0 U	2.0 U	2.0 U	2.0 U	1,000 U	200 U	200 U	400 U	400 U	400 U	100 U	50 U	100 U
	n-Butylbenzene	4,000[1]	50,000[1]	2.0 U	NA	2.0 U	NA	2.0 U	NA	2.0 U	2.0 U	2.0 U	2.0 U	2.0 U	2.0 U	2.0 U	2.0 U	2.0 U	1,000 U	200 U	200 U	400 U	400 U	400 U	100 U	50 U	100 U
	sec-Butylbenzene	4,000[1]	50,000[1]	2.0 U	NA	2.0 U	NA	2.0 U	NA	2.0 U	2.0 U	2.0 U	2.0 U	2.0 U	2.0 U	2.0 U	2.0 U	2.0 U	1,000 U	200 U	200 U	400 U	400 U	400 U	100 U	50 U	100 U
	tert-Butylbenzene	4,000[1]	50,000[1]	2.0 U	NA	2.0 U	NA	2.0 U	NA	2.0 U	2.0 U	2.0 U	2.0 U	2.0 U	2.0 U	2.0 U	2.0 U	2.0 U	1,000 U	200 U	200 U	400 U	400 U	400 U	100 U	50 U	100 U
	2-Chlorotoluene	NS	NS	2.0 U	NA	2.0 U	NA	2.0 U	NA	2.0 U	2.0 U	2.0 U	2.0 U	2.0 U	2.0 U	2.0 U	2.0 U	2.0 U	1,000 U	200 U	200 U	400 U	400 U	400 U	100 U	50 U	100 U
	4-Chlorotoluene	NS	NS	2.0 U	NA	2.0 U	NA	2.0 U	NA	2.0 U	2.0 U	2.0 U	2.0 U	2.0 U	2.0 U	2.0 U	2.0 U	2.0 U	1,000 U	200 U	200 U	400 U	400 U	400 U	100 U	50 U	100 U
	1,2-Dibromo-3-chloropropane (DBCP)	NS	NS	2.0 U	NA	2.0 U	NA	2.0 U	NA	2.0 U	2.0 U	2.0 U	2.0 U	2.0 U	2.0 U	2.0 U	2.0 U	2.0 U	1,000 U	200 U	200 U	400 U	400 U	400 U	100 U	50 U	100 U
	Hexachlorobutadiene	50	3,000	0.60 U	NA	0.60 U	NA	0.60 U	NA	0.60 U	0.60 U	0.60 U	0.60 U	0.60 U	0.60 U	0.60 U	0.60 U	0.60 U	300 U	60 U	60 U	120 U	120 U	120 U	30 U	15 U	30 U
	Isopropylbenzene (Cumene)	4,000[1]	50,000[1]	2.0 U	NA	2.0 U	NA	2.0 U	NA	2.0 U	2.0 U	2.0 U	2.0 U	2.0 U	2.0 U	2.0 U	2.0 U	2.0 U	1,000 U	200 U	200 U	400 U	400 U	400 U	100 U	50 U	100 U
	p-Isopropyltoluene (p-Cymene)	4,000[1]	50,000[1]	2.0 U	NA	2.0 U	NA	2.0 U	NA	2.0 U	2.0 U	2.0 U	2.0 U	2.0 U	2.0 U	2.0 U	2.0 U	2.0 U	1,000 U	200 U	200 U	400 U	400 U	400 U	100 U	50 U	100 U
	Naphthalene	700	20,000	2.0 U	NA	2.0 U	NA	2.0 U	NA	5.0 U	2.0 U	2.0 U	2.0 U	2.0 U	2.0 U	2.0 U	2.0 U	2.0 U	1,000 U	200 U	200 U	400 U	400 U	400 U	100 U	50 U	100 U
	n-Propylbenzene	4,000[1]	50,000[1]	2.0 U	NA	2.0 U	NA	2.0 U	NA	2.0 U	2.0 U	2.0 U	2.0 U	2.0 U	2.0 U	2.0 U	2.0 U	2.0 U	1,000 U	200 U	200 U	400 U	400 U	400 U	100 U	50 U	100 U
	1,2,3-Trichlorobenzene	NS	NS	2.0 U	NA	2.0 U	NA	2.0 U	NA	2.0 U	2.0 U	2.0 U	2.0 U	2.0 U	2.0 U	2.0 U	2.0 U	2.0 U	1,000 U	200 U	200 U	400 U	400 U	400 U	100 U	50 U	100 U
	1,2,4-Trichlorobenzene	200	50,000	2.0 U	NA	2.0 U	NA	2.0 U	NA	2.0 U	2.0 U	2.0 U	2.0 U	2.0 U	2.0 U	2.0 U	2.0 U	2.0 U	1,000 U	200 U	200 U	400 U	400 U	400 U	100 U	50 U	100 U
	1,3,5-Trimethylbenzene	4,000[1]	50,000[1]	2.0 U	NA	2.0 U	NA	2.0 U	NA	2.0 U	2.0 U	2.0 U	2.0 U	2.0 U	2.0 U	2.0 U	2.0 U	2.0 U	1,000 U	200 U	200 U	400 U	400 U	400 U	100 U	50 U	100 U
	1,2,4-Trimethylbenzene	4,000[1]	50,000[1]	2.0 U	NA	2.0 U	NA	2.0 U	NA	2.0 U	2.0 U	2.0 U	2.0 U	2.0 U	2.0 U	2.0 U	2.0 U	2.0 U	1,000 U	200 U	200 U	400 U	400 U	400 U	100 U	50 U	100 U
	Diisopropyl Ether (DIPE)	NS	NS	2.0 U	NA	2.0 U	NA	2.0 U	NA	2.0 U	2.0 U	2.0 U	2.0 U	2.0 U	2.0 U	2.0 U	2.0 U	2.0 U	1,000 U	200 U	200 U	400 U	400 U	400 U	100 U	50 U	100 U
	tert-Butyl Ethyl Ether (TBEE)	NS	NS	2.0 U	NA	2.0 U	NA	2.0 U	NA	2.0 U	2.0 U	2.0 U	2.0 U	2.0 U	2.0 U	2.0 U	2.0 U	2.0 U	1,000 U	200 U	200 U	400 U	400 U	400 U	100 U	50 U	100 U
	tert-Amyl Methyl Ether (TAME)	NS	NS	2.0 U	NA	2.0 U	NA	2.0 U	NA	2.0 U	2.0 U	2.0 U	2.0 U	2.0 U	2.0 U	2.0 U	2.0 U	2.0 U	1,000 U	200 U	200 U	400 U	400 U	400 U	100 U	50 U	100 U
	1,4-Dioxane	6,000	50,000	250 U	NA	250 U	NA	250 U	NA	250 U	250 U	250 U	250 U	250 U	250 U	250 U	250 U	250 U	120,000 U	25,000 U	25,000 U	50,000 U	50,000 U	50,000 U	12,000 U	6,200 U	12,000 U
	Diethyl Ether	NS	NS	2.0 U	NA	2.0 U	NA	2.0 U	NA	2.0 U	2.0 U	2.0 U	2.0 U	2.0 U	2.0 U	2.0 U	2.0 U	2.0 U	1,000 U	200 U	200 U	400 U	400 U	400 U	100 U	50 U	100 U

Table 2
Summary of Analytical Results for Groundwater Samples --
2008 through 2015
New Bedford High School
New Bedford, Massachusetts

Analysis	Analyte		Sample ID:	MW-28						MW-29		MW-30	MW-31					MW-32									
		Filter Size (micron)^:		N/A	0.45	N/A	0.45	N/A	0.45	N/A	N/A	N/A	N/A	N/A	N/A	N/A	N/A	N/A	N/A	N/A	N/A	N/A	N/A	N/A	N/A	N/A	N/A
		Sample Date:		2/21/2014	2/21/2014	1/5/2015	1/5/2015	7/27/2015	7/27/2015	9/10/2010	4/10/2012	10/22/2010	10/21/2010	3/8/2011	4/11/2011	8/24/2011	4/10/2012 *	10/21/2010	3/8/2011	3/25/2011	3/25/2011 Field Dup	4/8/2011	4/8/2011 Field Dup	4/28/2011	7/27/2011	8/2/2011	8/2/2011 Field Dup
		GW-2	GW-3																								
PAHs																											
(ug/L)	Acenaphthene	NS	10,000	NA	NA	NA	NA	NA	NA	NA	NA	NA	NA	NA	NA	NA	NA	NA	NA	NA	NA	NA	NA	NA	NA	NA	NA
	Acenaphthylene	10,000	40	NA	NA	NA	NA	NA	NA	NA	NA	NA	NA	NA	NA	NA	NA	NA	NA	NA	NA	NA	NA	NA	NA	NA	NA
	Anthracene	NS	30	NA	NA	NA	NA	NA	NA	NA	NA	NA	NA	NA	NA	NA	NA	NA	NA	NA	NA	NA	NA	NA	NA	NA	NA
	Benzo(a)anthracene	NS	1,000	NA	NA	NA	NA	NA	NA	NA	NA	NA	NA	NA	NA	NA	NA	NA	NA	NA	NA	NA	NA	NA	NA	NA	NA
	Benzo(a)pyrene	NS	500	NA	NA	NA	NA	NA	NA	NA	NA	NA	NA	NA	NA	NA	NA	NA	NA	NA	NA	NA	NA	NA	NA	NA	NA
	Benzo(b)fluoranthene	NS	400	NA	NA	NA	NA	NA	NA	NA	NA	NA	NA	NA	NA	NA	NA	NA	NA	NA	NA	NA	NA	NA	NA	NA	NA
	Benzo(g,h,i)perylene	NS	20	NA	NA	NA	NA	NA	NA	NA	NA	NA	NA	NA	NA	NA	NA	NA	NA	NA	NA	NA	NA	NA	NA	NA	NA
	Benzo(k)fluoranthene	NS	100	NA	NA	NA	NA	NA	NA	NA	NA	NA	NA	NA	NA	NA	NA	NA	NA	NA	NA	NA	NA	NA	NA	NA	NA
	Chrysene	NS	70	NA	NA	NA	NA	NA	NA	NA	NA	NA	NA	NA	NA	NA	NA	NA	NA	NA	NA	NA	NA	NA	NA	NA	NA
	Dibenz(a,h)anthracene	NS	40	NA	NA	NA	NA	NA	NA	NA	NA	NA	NA	NA	NA	NA	NA	NA	NA	NA	NA	NA	NA	NA	NA	NA	NA
	Fluoranthene	NS	200	NA	NA	NA	NA	NA	NA	NA	NA	NA	NA	NA	NA	NA	NA	NA	NA	NA	NA	NA	NA	NA	NA	NA	NA
	Fluorene	NS	40	NA	NA	NA	NA	NA	NA	NA	NA	NA	NA	NA	NA	NA	NA	NA	NA	NA	NA	NA	NA	NA	NA	NA	NA
	Indeno(1,2,3-cd)pyrene	NS	100	NA	NA	NA	NA	NA	NA	NA	NA	NA	NA	NA	NA	NA	NA	NA	NA	NA	NA	NA	NA	NA	NA	NA	NA
	2-Methylnaphthalene	2,000	20,000	NA	NA	NA	NA	NA	NA	NA	NA	NA	NA	NA	NA	NA	NA	NA	NA	NA	NA	NA	NA	NA	NA	NA	NA
	Naphthalene	700	20,000	NA	NA	NA	NA	NA	NA	NA	NA	NA	NA	NA	NA	NA	NA	NA	NA	NA	NA	NA	NA	NA	NA	NA	NA
	Phenanthrene	NS	10,000	NA	NA	NA	NA	NA	NA	NA	NA	NA	NA	NA	NA	NA	NA	NA	NA	NA	NA	NA	NA	NA	NA	NA	NA
	Pyrene	NS	20	NA	NA	NA	NA	NA	NA	NA	NA	NA	NA	NA	NA	NA	NA	NA	NA	NA	NA	NA	NA	NA	NA	NA	NA
PCBs																											
(ug/L)	Aroclor 1016	NS	NS	1.25 U	0.250 U	0.500 U	0.250 U	0.250 U	0.250 U	NA	0.0500 U	NA	NA	NA	NA	0.0500 U	0.0532 U	NA	NA	NA	NA	NA	NA	NA	NA	NA	NA
	Aroclor 1221	NS	NS	1.25 U	0.250 U	0.500 U	0.250 U	0.250 U	0.250 U	NA	0.0500 U	NA	NA	NA	NA	0.0500 U	0.0532 U	NA	NA	NA	NA	NA	NA	NA	NA	NA	NA
	Aroclor 1232	NS	NS	1.25 U	0.250 U	0.500 U	0.250 U	0.250 U	0.250 U	NA	0.0500 U	NA	NA	NA	NA	0.0500 U	0.0532 U	NA	NA	NA	NA	NA	NA	NA	NA	NA	NA
	Aroclor 1242	NS	NS	1.25 U	0.250 U	**4.42**	0.250 U	0.250 U	0.250 U	NA	0.0500 U	NA	NA	NA	NA	0.0500 U	0.0532 U	NA	NA	NA	NA	NA	NA	NA	NA	NA	NA
	Aroclor 1248	NS	NS	1.25 U	0.250 U	0.500 U	0.250 U	0.250 U	0.250 U	NA	**0.0329 J**	NA	NA	NA	NA	0.0500 U	0.0532 U	NA	NA	NA	NA	NA	NA	NA	NA	NA	NA
	Aroclor 1254	NS	NS	**8.96**	0.250 U	**7.48**	0.250 U	**6.53**	0.250 U	NA	**0.0371 J**	NA	NA	NA	NA	**0.0685**	**0.0547 J**	NA	NA	NA	NA	NA	NA	NA	NA	NA	NA
	Aroclor 1260	NS	NS	1.25 U	0.250 U	0.500 U	0.250 U	0.250 U	0.250 U	NA	0.0500 U	NA	NA	NA	NA	0.0500 U	0.0532 U	NA	NA	NA	NA	NA	NA	NA	NA	NA	NA
	Aroclor 1262	NS	NS	1.25 U	0.250 U	0.500 U	0.250 U	0.250 U	0.250 U	NA	NA	NA	NA	NA	NA	NA	NA	NA	NA	NA	NA	NA	NA	NA	NA	NA	NA
	Aroclor 1268	NS	NS	1.25 U	0.250 U	0.500 U	0.250 U	0.250 U	0.250 U	NA	NA	NA	NA	NA	NA	NA	NA	NA	NA	NA	NA	NA	NA	NA	NA	NA	NA
	Total PCBs	5	10	**8.96**	0.250 U	**11.9**	0.250 U	**6.53**	0.250 U	NA	**0.0700 J**	NA	NA	NA	NA	**0.0685**	**0.0547 J**	NA	NA	NA	NA	NA	NA	NA	NA	NA	NA
Total Petroleum Hydrocarbons																											
(ug/L)	Total Petroleum Hydrocarbons (C9-C44)	5,000	5,000	NA	NA	NA	NA	NA	NA	NA	NA	NA	NA	NA	NA	NA	NA	NA	NA	NA	NA	NA	NA	NA	NA	NA	NA
Metals, total																											
(ug/L)	Antimony	NS	8,000	NA	NA	NA	NA	NA	NA	NA	NA	NA	NA	NA	NA	NA	NA	NA	NA	NA	NA	NA	NA	NA	NA	NA	NA
	Arsenic	NS	900	NA	NA	NA	NA	NA	NA	NA	NA	NA	NA	NA	NA	NA	NA	NA	NA	NA	NA	NA	NA	NA	NA	NA	NA
	Barium	NS	50,000	NA	NA	NA	NA	NA	NA	NA	NA	NA	NA	NA	NA	NA	NA	NA	NA	NA	NA	NA	NA	NA	NA	NA	NA
	Beryllium	NS	200	NA	NA	NA	NA	NA	NA	NA	NA	NA	NA	NA	NA	NA	NA	NA	NA	NA	NA	NA	NA	NA	NA	NA	NA
	Cadmium	NS	4	NA	NA	NA	NA	NA	NA	NA	NA	NA	NA	NA	NA	NA	NA	NA	NA	NA	NA	NA	NA	NA	NA	NA	NA
	Chromium	NS	300	NA	NA	NA	NA	NA	NA	NA	NA	NA	NA	NA	NA	NA	NA	NA	NA	NA	NA	NA	NA	NA	NA	NA	NA
	Lead	NS	10	NA	NA	NA	NA	NA	NA	NA	NA	NA	NA	NA	NA	NA	NA	NA	NA	NA	NA	NA	NA	NA	NA	NA	NA
	Mercury	NS	20	NA	NA	NA	NA	NA	NA	NA	NA	NA	NA	NA	NA	NA	NA	NA	NA	NA	NA	NA	NA	NA	NA	NA	NA
	Nickel	NS	200	NA	NA	NA	NA	NA	NA	NA	NA	NA	NA	NA	NA	NA	NA	NA	NA	NA	NA	NA	NA	NA	NA	NA	NA
	Selenium	NS	100	NA	NA	NA	NA	NA	NA	NA	NA	NA	NA	NA	NA	NA	NA	NA	NA	NA	NA	NA	NA	NA	NA	NA	NA
	Silver	NS	7	NA	NA	NA	NA	NA	NA	NA	NA	NA	NA	NA	NA	NA	NA	NA	NA	NA	NA	NA	NA	NA	NA	NA	NA
	Thallium	NS	3,000	NA	NA	NA	NA	NA	NA	NA	NA	NA	NA	NA	NA	NA	NA	NA	NA	NA	NA	NA	NA	NA	NA	NA	NA
	Vanadium	NS	4,000	NA	NA	NA	NA	NA	NA	NA	NA	NA	NA	NA	NA	NA	NA	NA	NA	NA	NA	NA	NA	NA	NA	NA	NA
	Zinc	NS	900	NA	NA	NA	NA	NA	NA	NA	NA	NA	NA	NA	NA	NA	NA	NA	NA	NA	NA	NA	NA	NA	NA	NA	NA
Metals, dissolved																											
(ug/L)	Antimony	NS	8,000	NA	NA	NA	NA	NA	NA	NA	NA	NA	NA	NA	NA	NA	NA	NA	NA	NA	NA	NA	NA	NA	NA	NA	NA
	Arsenic	NS	900	NA	NA	NA	NA	NA	NA	NA	NA	NA	NA	NA	NA	NA	NA	NA	NA	NA	NA	NA	NA	NA	NA	NA	NA
	Barium	NS	50,000	NA	NA	NA	NA	NA	NA	NA	NA	NA	NA	NA	NA	NA	NA	NA	NA	NA	NA	NA	NA	NA	NA	NA	NA
	Beryllium	NS	200	NA	NA	NA	NA	NA	NA	NA	NA	NA	NA	NA	NA	NA	NA	NA	NA	NA	NA	NA	NA	NA	NA	NA	NA
	Cadmium	NS	4	NA	NA	NA	NA	NA	NA	NA	NA	NA	NA	NA	NA	NA	NA	NA	NA	NA	NA	NA	NA	NA	NA	NA	NA
	Chromium	NS	300	NA	NA	NA	NA	NA	NA	NA	NA	NA	NA	NA	NA	NA	NA	NA	NA	NA	NA	NA	NA	NA	NA	NA	NA
	Lead	NS	10	NA	NA	NA	NA	NA	NA	NA	NA	NA	NA	NA	NA	NA	NA	NA	NA	NA	NA	NA	NA	NA	NA	NA	NA
	Mercury	NS	20	NA	NA	NA	NA	NA	NA	NA	NA	NA	NA	NA	NA	NA	NA	NA	NA	NA	NA	NA	NA	NA	NA	NA	NA
	Nickel	NS	200	NA	NA	NA	NA	NA	NA	NA	NA	NA	NA	NA	NA	NA	NA	NA	NA	NA	NA	NA	NA	NA	NA	NA	NA
	Selenium	NS	100	NA	NA	NA	NA	NA	NA	NA	NA	NA	NA	NA	NA	NA	NA	NA	NA	NA	NA	NA	NA	NA	NA	NA	NA
	Silver	NS	7	NA	NA	NA	NA	NA	NA	NA	NA	NA	NA	NA	NA	NA	NA	NA	NA	NA	NA	NA	NA	NA	NA	NA	NA
	Thallium	NS	3,000	NA	NA	NA	NA	NA	NA	NA	NA	NA	NA	NA	NA	NA	NA	NA	NA	NA	NA	NA	NA	NA	NA	NA	NA
	Vanadium	NS	4,000	NA	NA	NA	NA	NA	NA	NA	NA	NA	NA	NA	NA	NA	NA	NA	NA	NA	NA	NA	NA	NA	NA	NA	NA
	Zinc	NS	900	NA	NA	NA	NA	NA	NA	NA	NA	NA	NA	NA	NA	NA	NA	NA	NA	NA	NA	NA	NA	NA	NA	NA	NA
General Chemistry																											
(ug/L)	Nitrogen, Nitrate	NS	NS	NA	NA	NA	NA	NA	NA	**110**	**110**	NA	NA	NA	NA	NA	NA	NA	NA	NA	NA	NA	NA	NA	NA	NA	NA
	Sulfate	NS	NS	NA	NA	NA	NA	NA	NA	10,000 U	10,000 U	NA	NA	NA	NA	NA	NA	NA	NA	NA	NA	NA	NA	NA	NA	NA	NA
	Total Organic Carbon	NS	NS	NA	NA	NA	NA	NA	NA	**4,700**	**4,700**	NA	NA	NA	NA	NA	NA	NA	NA	NA	NA	NA	NA	NA	NA	NA	NA

Notes:
ug/L - micrograms per liter.
B - Compound detected in associated method blank
J - Estimated value.
NA - Sample not analyzed for the listed analyte.
N/A - Not applicable.
NS - No MassDEP standards exist for this compound.
U - Compound was not detected at specified quantitation limit.
Values in **Bold** indicate the compound was detected.
VOCs - Volatile Organic Compounds.
PAHs - Polynuclear Aromatic Hydrocarbons.
PCBs - Polychlorinated Biphenyls.
(1) - MassDEP Method 1 standards for C9-C10 aromatic hydrocarbons used.
(2) - MassDEP Method 1 standards for 1,3-Dichloropropene used.
(3) - criteria applicable to xylene (total), the sum of the xylene isomers.
^ - 0.45 micron filtration done in field; 0.20 and 2.0 micron filtration performed in lab.
* - Sample collected on 4/10/2012 for PCB analysis was broken and was recollected on 4/18/2012.
** - Lab filtered sample using a 2.0 micron filter and then filtered a second time using a 0.20 micron fil

Table 2
Summary of Analytical Results for Groundwater Samples --
2008 through 2015
New Bedford High School
New Bedford, Massachusetts

Analysis	Analyte	Sample ID:		MW-32							MW-33					MW-40			MW-41													
		Filter Size (micron)^:		N/A	N/A	N/A	N/A	N/A	N/A	N/A	N/A	N/A	N/A	N/A	N/A	N/A	N/A	0.45	N/A	N/A	N/A	N/A	2.0	0.45	0.20	N/A	0.45	0.20	N/A	0.45	N/A	0.45
		Sample Date:		8/25/2011	2/27/2012	4/11/2012	12/13/2012	1/17/2014	1/5/2015	7/27/2015	10/21/2010	3/8/2011	4/12/2011	8/24/2011	4/11/2012	7/3/2012	1/17/2014	1/17/2014	7/3/2012	7/3/2012	12/13/2012	1/17/2014	1/17/2014	1/17/2014	1/17/2014	2/21/2014	2/21/2014	2/21/2014	1/5/2015	1/5/2015	7/27/2015	7/27/2015
		GW-2	GW-3																	Field Dup					**							
VOCs (ug/L)	Methylene Chloride	2,000	50,000	50 U	2.0 U	4.0 U	2.0 U	2.0 U	2.0 U	2.0 U	2.0 U	2.0 U	2.0 U	2.0 U	2.0 U	2.0 U	2.0 U	NA	2.0 U	2.0 U	2.0 U	2.0 U	NA	NA	NA	2.0 U	NA	NA	2.0 U	NA	2.0 U	NA
	1,1-Dichloroethane	2,000	20,000	25 U	1.0 U	2.0 U	1.0 U	1.0 U	1.0 U	1.0 U	1.0 U	1.0 U	1.0 U	1.0 U	1.0 U	1.0 U	1.0 U	NA	1.0 U	1.0 U	1.0 U	1.0 U	NA	NA	NA	1.0 U	NA	NA	1.0 U	NA	1.0 U	NA
	Chloroform	50	20,000	25 U	1.0 U	2.0 U	1.0 U	1.0 U	1.0 U	1.0 U	1.0 U	1.0 U	1.0 U	1.0 U	1.0 U	1.0 U	1.0 U	NA	1.0 U	1.0 U	1.0 U	1.0 U	NA	NA	NA	1.0 U	NA	NA	1.0 U	NA	1.0 U	NA
	Carbon Tetrachloride	2	5,000	25 U	1.0 U	2.0 U	1.0 U	1.0 U	1.0 U	1.0 U	1.0 U	1.0 U	1.0 U	1.0 U	1.0 U	1.0 U	1.0 U	NA	1.0 U	1.0 U	1.0 U	1.0 U	NA	NA	NA	1.0 U	NA	NA	1.0 U	NA	1.0 U	NA
	1,2-Dichloropropane	3	50,000	25 U	1.0 U	2.0 U	1.0 U	1.0 U	1.0 U	1.0 U	1.0 U	1.0 U	1.0 U	1.0 U	1.0 U	1.0 U	1.0 U	NA	1.0 U	1.0 U	1.0 U	1.0 U	NA	NA	NA	1.0 U	NA	NA	1.0 U	NA	1.0 U	NA
	Chlorodibromomethane	20	50,000	25 U	1.0 U	2.0 U	1.0 U	1.0 U	1.0 U	1.0 U	1.0 U	1.0 U	1.0 U	1.0 U	1.0 U	1.0 U	1.0 U	NA	1.0 U	1.0 U	1.0 U	1.0 U	NA	NA	NA	1.0 U	NA	NA	1.0 U	NA	1.0 U	NA
	1,1,2-Trichloroethane	900	50,000	25 U	1.0 U	2.0 U	1.0 U	1.0 U	1.0 U	1.0 U	1.0 U	1.0 U	1.0 U	1.0 U	1.0 U	1.0 U	1.0 U	NA	1.0 U	1.0 U	1.0 U	1.0 U	NA	NA	NA	1.0 U	NA	NA	1.0 U	NA	1.0 U	NA
	Tetrachloroethylene	50	30,000	25 U	1.0 U	2.0 U	1.0 U	1.0 U	1.0 U	1.0 U	1.0 U	1.0 U	1.0 U	1.0 U	1.0 U	1.0 U	1.0 U	NA	1.0 U	1.0 U	1.0 U	1.0 U	NA	NA	NA	1.0 U	NA	NA	1.0 U	NA	1.0 U	NA
	Chlorobenzene	200	1,000	25 U	1.0 U	2.0 U	1.0 U	1.0 U	1.0 U	1.0 U	1.0 U	1.0 U	1.0 U	1.0 U	1.0 U	1.0 U	1.0 U	NA	1.0 U	1.0 U	1.0 U	1.0 U	NA	NA	NA	1.0 U	NA	NA	1.0 U	NA	1.0 U	NA
	Trichlorofluoromethane (Freon 11)	NS	NS	50 U	2.0 U	4.0 U	2.0 U	2.0 U	2.0 U	2.0 U	2.0 U	2.0 U	2.0 U	2.0 U	2.0 U	2.0 U	2.0 U	NA	2.0 U	2.0 U	2.0 U	2.0 U	NA	NA	NA	2.0 U	NA	NA	2.0 U	NA	2.0 U	NA
	1,2-Dichloroethane	5	20,000	25 U	1.0 U	2.0 U	1.0 U	1.0 U	1.0 U	1.0 U	1.0 U	1.0 U	1.0 U	1.0 U	1.0 U	1.0 U	1.0 U	NA	1.0 U	1.0 U	1.0 U	1.0 U	NA	NA	NA	1.0 U	NA	NA	1.0 U	NA	1.0 U	NA
	1,1,1-Trichloroethane	4,000	20,000	25 U	1.0 U	2.0 U	1.0 U	1.0 U	1.0 U	1.0 U	1.0 U	1.0 U	1.0 U	1.0 U	1.0 U	1.0 U	1.0 U	NA	1.0 U	1.0 U	1.0 U	1.0 U	NA	NA	NA	1.0 U	NA	NA	1.0 U	NA	1.0 U	NA
	Bromodichloromethane	6	50,000	25 U	1.0 U	2.0 U	1.0 U	1.0 U	1.0 U	1.0 U	1.0 U	1.0 U	1.0 U	1.0 U	1.0 U	1.0 U	1.0 U	NA	1.0 U	1.0 U	1.0 U	1.0 U	NA	NA	NA	1.0 U	NA	NA	1.0 U	NA	1.0 U	NA
	trans-1,3-Dichloropropene	10[(2)]	200[(2)]	12 U	0.5 U	1.0 U	0.50 U	0.50 U	0.50 U	0.5 U	0.50 U	0.50 U	0.50 U	0.50 U	0.50 U	0.50 U	0.50 U	NA	0.50 U	0.50 U	0.50 U	0.50 U	NA	NA	NA	0.50 U	NA	NA	0.50 U	NA	0.50 U	NA
	cis-1,3-Dichloropropene	10[(2)]	200[(2)]	12 U	0.5 U	1.0 U	0.50 U	0.50 U	0.50 U	0.5 U	0.50 U	0.50 U	0.50 U	0.50 U	0.50 U	0.50 U	0.50 U	NA	0.50 U	0.50 U	0.50 U	0.50 U	NA	NA	NA	0.50 U	NA	NA	0.50 U	NA	0.50 U	NA
	1,3-Dichloropropene, Total	10	200	NA	NA	NA	NA	NA	0.50 U	0.5 U	NA	NA	NA	NA	NA	NA	NA	NA	NA	NA	NA	NA	NA	NA	NA	NA	NA	NA	0.50 U	NA	0.50 U	NA
	1,1-Dichloropropene	NS	NS	50 U	2.0 U	4.0 U	2.0 U	2.0 U	2.0 U	2.0 U	2.0 U	2.0 U	2.0 U	2.0 U	2.0 U	2.0 U	2.0 U	NA	2.0 U	2.0 U	2.0 U	2.0 U	NA	NA	NA	2.0 U	NA	NA	2.0 U	NA	2.0 U	NA
	Bromoform	700	50,000	50 U	2.0 U	4.0 U	2.0 U	2.0 U	2.0 U	2.0 U	2.0 U	2.0 U	2.0 U	2.0 U	2.0 U	2.0 U	2.0 U	NA	2.0 U	2.0 U	2.0 U	2.0 U	NA	NA	NA	2.0 U	NA	NA	2.0 U	NA	2.0 U	NA
	1,1,2,2-Tetrachloroethane	9	50,000	25 U	1.0 U	2.0 U	1.0 U	1.0 U	1.0 U	1.0 U	1.0 U	1.0 U	1.0 U	1.0 U	1.0 U	1.0 U	1.0 U	NA	1.0 U	1.0 U	1.0 U	1.0 U	NA	NA	NA	1.0 U	NA	NA	1.0 U	NA	1.0 U	NA
	Benzene	1,000	10,000	12 U	0.5 U	1.0 U	0.50 U	0.50 U	0.50 U	0.5 U	1.0 U	1.0 U	1.0 U	0.50 U	0.50 U	0.50 U	0.50 U	NA	0.50 U	0.50 U	0.50 U	0.50 U	NA	NA	NA	0.50 U	NA	NA	0.50 U	NA	0.50 U	NA
	Toluene	50,000	40,000	25 U	1.0 U	2.0 U	1.0 U	1.0 U	1.0 U	1.0 U	1.0 U	1.0 U	1.0 U	1.0 U	1.0 U	1.0 U	1.0 U	NA	1.0 U	1.0 U	1.0 U	1.0 U	NA	NA	NA	1.0 U	NA	NA	1.0 U	NA	1.0 U	NA
	Ethylbenzene	20,000	5,000	25 U	1.0 U	2.0 U	1.0 U	1.0 U	1.0 U	1.0 U	1.0 U	1.0 U	1.0 U	1.0 U	1.0 U	1.0 U	1.0 U	NA	1.0 U	1.0 U	1.0 U	1.0 U	NA	NA	NA	1.0 U	NA	NA	1.0 U	NA	1.0 U	NA
	Chloromethane	NS	NS	50 U	2.0 U	4.0 U	2.0 U	2.0 U	2.0 U	2.0 U	2.0 U	2.0 U	2.0 U	2.0 U	2.0 U	2.0 U	2.0 U	NA	2.0 U	2.0 U	2.0 U	2.0 U	NA	NA	NA	2.0 U	NA	NA	2.0 U	NA	2.0 U	NA
	Bromomethane	7	800	50 U	2.0 U	4.0 U	2.0 U	2.0 U	2.0 U	2.0 U	2.0 U	2.0 U	2.0 U	2.0 U	2.0 U	2.0 U	2.0 U	NA	2.0 U	2.0 U	2.0 U	2.0 U	NA	NA	NA	2.0 U	NA	NA	2.0 U	NA	2.0 U	NA
	Vinyl Chloride	2	50,000	25 U	1.0 U	**2.0**	**15**	**11**	**2.1**	1.0 U	1.0 U	1.0 U	1.0 U	1.0 U	1.0 U	**7.6**	1.0 U	NA	**1,200**	**1,200**	**84**	**5.0**	NA	NA	NA	**4.5**	NA	NA	**1.0**	NA	**16**	NA
	Chloroethane	NS	NS	50 U	2.0 U	4.0 U	2.0 U	2.0 U	2.0 U	2.0 U	2.0 U	2.0 U	2.0 U	2.0 U	2.0 U	2.0 U	2.0 U	NA	2.0 U	2.0 U	2.0 U	2.0 U	NA	NA	NA	2.0 U	NA	NA	2.0 U	NA	2.0 U	NA
	1,1-Dichloroethylene	80	30,000	25 U	1.0 U	2.0 U	1.0 U	1.0 U	1.0 U	1.0 U	1.0 U	1.0 U	1.0 U	1.0 U	1.0 U	1.0 U	1.0 U	NA	1.0 U	1.0 U	1.0 U	1.0 U	NA	NA	NA	1.0 U	NA	NA	1.0 U	NA	1.0 U	NA
	trans-1,2-Dichloroethylene	80	50,000	**29**	**3.5**	**6.5**	**1.5**	1.0 U	1.0 U	1.0 U	1.0 U	1.0 U	1.0 U	1.0 U	1.0 U	**12**	1.0 U	NA	**2,300**	**2,400**	**31**	**3.7**	NA	NA	NA	**3.2**	NA	NA	1.0 U	NA	25	NA
	Trichloroethylene	5	5,000	**2,800**	**110**	**170**	**2.2**	**1.1**	1.0 U	**2.6**	1.0 U	1.0 U	1.0 U	**1.1**	1.0 U	**13**	1.0 U	NA	**280**	**280**	**5.5**	**11**	NA	NA	NA	**6.6**	NA	NA	**9.1**	NA	**5.4**	NA
	1,2-Dichlorobenzene	8,000	2,000	25 U	1.0 U	2.0 U	1.0 U	1.0 U	1.0 U	1.0 U	1.0 U	1.0 U	1.0 U	1.0 U	1.0 U	1.0 U	1.0 U	NA	**5.6**	1.0 U	1.0 U	1.0 U	NA	NA	NA	1.0 U	NA	NA	1.0 U	NA	1.0 U	NA
	1,3-Dichlorobenzene	6,000	50,000	25 U	1.0 U	2.0 U	1.0 U	1.0 U	1.0 U	1.0 U	1.0 U	1.0 U	1.0 U	1.0 U	1.0 U	1.0 U	1.0 U	NA	**4.2**	**4.0**	**3.6**	1.0 U	NA	NA	NA	**1.2**	NA	NA	1.0 U	NA	**2.0**	NA
	1,4-Dichlorobenzene	60	8,000	25 U	1.0 U	2.0 U	1.0 U	1.0 U	1.0 U	1.0 U	1.0 U	1.0 U	1.0 U	1.0 U	1.0 U	1.0 U	1.0 U	NA	**4.9**	**4.8**	**2.4**	**1.1**	NA	NA	NA	**1.2**	NA	NA	1.0 U	NA	**2.9**	NA
	Methyl tert-Butyl Ether (MTBE)	50,000	50,000	50 U	2.0 U	4.0 U	2.0 U	2.0 U	2.0 U	2.0 U	2.0 U	2.0 U	2.0 U	2.0 U	2.0 U	2.0 U	2.0 U	NA	2.0 U	2.0 U	2.0 U	2.0 U	NA	NA	NA	2.0 U	NA	NA	2.0 U	NA	2.0 U	NA
	m+p Xylene	3,000[(3)]	5,000[(3)]	50 U	2.0 U	4.0 U	2.0 U	2.0 U	2.0 U	2.0 U	2.0 U	2.0 U	2.0 U	2.0 U	2.0 U	2.0 U	2.0 U	NA	2.0 U	2.0 U	2.0 U	2.0 U	NA	NA	NA	2.0 U	NA	NA	2.0 U	NA	2.0 U	NA
	o-Xylene	3,000[(3)]	5,000[(3)]	25 U	1.0 U	2.0 U	1.0 U	1.0 U	1.0 U	1.0 U	1.0 U	1.0 U	1.0 U	1.0 U	1.0 U	1.0 U	1.0 U	NA	1.0 U	1.0 U	1.0 U	1.0 U	NA	NA	NA	1.0 U	NA	NA	1.0 U	NA	1.0 U	NA
	Xylene (Total)	3,000	5,000	50 U	2.0 U	4.0 U	2.0 U	2.0 U	1.0 U	1.0 U	2.0 U	2.0 U	2.0 U	2.0 U	2.0 U	2.0 U	2.0 U	NA	2.0 U	2.0 U	2.0 U	2.0 U	NA	NA	NA	2.0 U	NA	NA	1.0 U	NA	1.0 U	NA
	cis-1,2-Dichloroethylene	20	50,000	**250**	**50**	**190**	**71**	**8.1**	**1.8**	**1.5**	1.0 U	1.0 U	1.0 U	1.0 U	1.0 U	**32**	1.0 U	NA	**6,600**	**6,800**	**82**	**13**	NA	NA	NA	**13**	NA	NA	**8.8**	NA	**55**	NA
	1,2-Dichloroethene (total)	NS	NS	NA	NA	NA	NA	NA	**1.8**	**1.5**	NA	NA	NA	NA	NA	NA	NA	NA	NA	NA	NA	NA	NA	NA	NA	NA	NA	NA	**8.8**	NA	**80**	NA
	Dibromomethane	NS	NS	50 U	2.0 U	4.0 U	2.0 U	2.0 U	2.0 U	2.0 U	2.0 U	2.0 U	2.0 U	2.0 U	2.0 U	2.0 U	2.0 U	NA	2.0 U	2.0 U	2.0 U	2.0 U	NA	NA	NA	2.0 U	NA	NA	2.0 U	NA	2.0 U	NA
	1,2,3-Trichloropropane	NS	NS	50 U	2.0 U	4.0 U	2.0 U	2.0 U	2.0 U	2.0 U	2.0 U	2.0 U	2.0 U	2.0 U	2.0 U	2.0 U	2.0 U	NA	2.0 U	2.0 U	2.0 U	2.0 U	NA	NA	NA	2.0 U	NA	NA	2.0 U	NA	2.0 U	NA
	Styrene	100	6,000	25 U	1.0 U	2.0 U	1.0 U	1.0 U	1.0 U	1.0 U	1.0 U	1.0 U	1.0 U	1.0 U	1.0 U	1.0 U	1.0 U	NA	1.0 U	1.0 U	1.0 U	1.0 U	NA	NA	NA	1.0 U	NA	NA	1.0 U	NA	1.0 U	NA
	Dichlorodifluoromethane (Freon 12)	NS	NS	50 U	2.0 U	4.0 U	2.0 U	2.0 U	2.0 U	2.0 U	2.0 U	2.0 U	2.0 U	2.0 U	2.0 U	2.0 U	2.0 U	NA	2.0 U	2.0 U	2.0 U	2.0 U	NA	NA	NA	2.0 U	NA	NA	2.0 U	NA	2.0 U	NA
	Acetone	50,000	50,000	120 U	5.0 U	10 U	5.0 U	5.0 U	5.0 U	5.0 U	5.0 U	5.0 U	5.0 U	5.0 U	5.0 U	5.0 U	5.0 U	NA	5.0 U	5.0 U	5.0 U	5.0 U	NA	NA	NA	5.0 U	NA	NA	5.0 U	NA	5.0 U	NA
	Carbon Disulfide	NS	NS	50 U	2.0 U	4.0 U	2.0 U	2.0 U	2.0 U	2.0 U	2.0 U	2.0 U	2.0 U	2.0 U	2.0 U	2.0 U	2.0 U	NA	2.0 U	2.0 U	2.0 U	2.0 U	NA	NA	NA	2.0 U	NA	NA	2.0 U	NA	2.0 U	NA
	2-Butanone (MEK)	50,000	50,000	120 U	5.0 U	10 U	5.0 U	5.0 U	5.0 U	5.0 U	5.0 U	5.0 U	5.0 U	5.0 U	5.0 U	5.0 U	5.0 U	NA	5.0 U	5.0 U	5.0 U	5.0 U	NA	NA	NA	5.0 U	NA	NA	5.0 U	NA	5.0 U	NA
	4-Methyl-2-pentanone (MIBK)	50,000	50,000	120 U	5.0 U	10 U	5.0 U	5.0 U	5.0 U	5.0 U	5.0 U	5.0 U	5.0 U	5.0 U	5.0 U	5.0 U	5.0 U	NA	5.0 U	5.0 U	5.0 U	5.0 U	NA	NA	NA	5.0 U	NA	NA	5.0 U	NA	5.0 U	NA
	2-Hexanone (MBK)	NS	NS	120 U	5.0 U	10 U	5.0 U	5.0 U	5.0 U	5.0 U	5.0 U	5.0 U	5.0 U	5.0 U	5.0 U	5.0 U	5.0 U	NA	5.0 U	5.0 U	5.0 U	5.0 U	NA	NA	NA	5.0 U	NA	NA	5.0 U	NA	5.0 U	NA
	Bromochloromethane	NS	NS	50 U	2.0 U	4.0 U	2.0 U	2.0 U	2.0 U	2.0 U	2.0 U	2.0 U	2.0 U	2.0 U	2.0 U	2.0 U	2.0 U	NA	2.0 U	2.0 U	2.0 U	2.0 U	NA	NA	NA	2.0 U	NA	NA	2.0 U	NA	2.0 U	NA
	Tetrahydrofuran	NS	NS	120 U	5.0 U	10 U	5.0 U	2.0 U	2.0 U	2.0 U	10 U	5.0 U	5.0 U	5.0 U	5.0 U	5.0 U	2.0 U	NA	5.0 U	5.0 U	5.0 U	2.0 U	NA	NA	NA	2.0 U	NA	NA	2.0 U	NA	2.0 U	NA
	2,2-Dichloropropane	NS	NS	50 U	2.0 U	4.0 U	2.0 U	2.0 U	2.0 U	2.0 U	2.0 U	2.0 U	2.0 U	2.0 U	2.0 U	2.0 U	2.0 U	NA	2.0 U	2.0 U	2.0 U	2.0 U	NA	NA	NA	2.0 U	NA	NA	2.0 U	NA	2.0 U	NA
	1,2-Dibromoethane (EDB)	2	50,000	50 U	2.0 U	4.0 U	2.0 U	2.0 U	2.0 U	2.0 U	2.0 U	2.0 U	2.0 U	2.0 U	2.0 U	2.0 U	2.0 U	NA	2.0 U	2.0 U	2.0 U	2.0 U	NA	NA	NA	2.0 U	NA	NA	2.0 U	NA	2.0 U	NA
	1,3-Dichloropropane	NS	NS	50 U	2.0 U	4.0 U	2.0 U	2.0 U	2.0 U	2.0 U	2.0 U	2.0 U	2.0 U	2.0 U	2.0 U	2.0 U	2.0 U	NA	2.0 U	2.0 U	2.0 U	2.0 U	NA	NA	NA	2.0 U	NA	NA	2.0 U	NA	2.0 U	NA
	1,1,1,2-Tetrachloroethane	10	50,000	25 U	1.0 U	2.0 U	1.0 U	1.0 U	1.0 U	1.0 U	1.0 U	1.0 U	1.0 U	1.0 U	1.0 U	1.0 U	1.0 U	NA	1.0 U	1.0 U	1.0 U	1.0 U	NA	NA	NA	1.0 U	NA	NA	1.0 U	NA	1.0 U	NA
	Bromobenzene	NS	NS	50 U	2.0 U	4.0 U	2.0 U	2.0 U	2.0 U	2.0 U	2.0 U	2.0 U	2.0 U	2.0 U	2.0 U	2.0 U	2.0 U	NA	2.0 U	2.0 U	2.0 U	2.0 U	NA	NA	NA	2.0 U	NA	NA	2.0 U	NA	2.0 U	NA
	n-Butylbenzene	4,000[(1)]	50,000[(1)]	50 U	2.0 U	4.0 U	2.0 U	2.0 U	2.0 U	2.0 U	2.0 U	2.0 U	2.0 U	2.0 U	2.0 U	2.0 U	2.0 U	NA	2.0 U	2.0 U	2.0 U	2.0 U	NA	NA	NA	2.0 U	NA	NA	2.0 U	NA	2.0 U	NA
	sec-Butylbenzene	4,000[(1)]	50,000[(1)]	50 U	2.0 U	4.0 U	2.0 U	2.0 U	2.0 U	2.0 U	2.0 U	2.0 U	2.0 U	2.0 U	2.0 U	2.0 U	2.0 U	NA	2.0 U	2.0 U	2.0 U	2.0 U	NA	NA	NA	2.0 U	NA	NA	2.0 U	NA	2.0 U	NA
	tert-Butylbenzene	4,000[(1)]	50,000[(1)]	50 U	2.0 U	4.0 U	2.0 U	2.0 U	2.0 U	2.0 U	2.0 U	2.0 U	2.0 U	2.0 U	2.0 U	2.0 U	2.0 U	NA	2.0 U	2.0 U	2.0 U	2.0 U	NA	NA	NA	2.0 U	NA	NA	2.0 U	NA	2.0 U	NA
	2-Chlorotoluene	NS	NS	50 U	2.0 U	4.0 U	2.0 U	2.0 U	2.0 U	2.0 U	2.0 U	2.0 U	2.0 U	2.0 U	2.0 U	2.0 U	2.0 U	NA	2.0 U	2.0 U	2.0 U	2.0 U	NA	NA	NA	2.0 U	NA	NA	2.0 U	NA	2.0 U	NA
	4-Chlorotoluene	NS	NS	50 U	2.0 U	4.0 U	2.0 U	2.0 U	2.0 U	2.0 U	2.0 U	2.0 U	2.0 U	2.0 U	2.0 U	2.0 U	2.0 U	NA	2.0 U	2.0 U	2.0 U	2.0 U	NA	NA	NA	2.0 U	NA	NA	2.0 U	NA	2.0 U	NA
	1,2-Dibromo-3-chloropropane (DBCP)	NS	NS	50 U	2.0 U	4.0 U	2.0 U	2.0 U	2.0 U	2.0 U	2.0 U	2.0 U	2.0 U	2.0 U	2.0 U	2.0 U	2.0 U	NA	2.0 U	2.0 U	2.0 U	2.0 U	NA	NA	NA	2.0 U	NA	NA	2.0 U	NA	2.0 U	NA
	Hexachlorobutadiene	50	3,000	15 U	0.6 U	1.2 U	0.60 U	0.60 U	0.60 U	0.6 U	0.60 U	0.60 U	0.60 U	0.60 U	0.60 U	0.60 U	0.60 U	NA	0.60 U	0.60 U	0.60 U	0.60 U	NA	NA	NA	0.60 U	NA	NA	0.60 U	NA	0.60 U	NA
	Isopropylbenzene (Cumene)	4,000[(1)]	50,000[(1)]	50 U	2.0 U	4.0 U	2.0 U	2.0 U	2.0 U	2.0 U	2.0 U	2.0 U	2.0 U	2.0 U	2.0 U	2.0 U	2.0 U	NA	2.0 U	2.0 U	2.0 U	2.0 U	NA	NA	NA	2.0 U	NA	NA	2.0 U	NA	2.0 U	NA
	p-Isopropyltoluene (p-Cymene)	4,000[(1)]	50,000[(1)]	50 U	2.0 U	4.0 U	2.0 U	2.0 U	2.0 U	2.0 U	2.0 U	2.0 U	2.0 U	2.0 U	2.0 U	2.0 U	2.0 U	NA	2.0 U	2.0 U	2.0 U	2.0 U	NA	NA	NA	2.0 U	NA	NA	2.0 U	NA	2.0 U	NA
	Naphthalene	700	20,000	50 U	2.0 U	4.0 U	2.0 U	2.0 U	2.0 U	2.0 U	2.0 U	2.0 U	2.0 U	2.0 U	2.0 U	2.0 U	2.0 U	NA	2.0 U	2.0 U	2.0 U	2.0 U	NA	NA	NA	2.0 U	NA	NA	2.0 U	NA	2.0 U	NA
	n-Propylbenzene	4,000[(1)]	50,000[(1)]	50 U	2.0 U	4.0 U	2.0 U	2.0 U	2.0 U	2.0 U	2.0 U	2.0 U	2.0 U	2.0 U	2.0 U	2.0 U	2.0 U	NA	2.0 U	2.0 U	2.0 U	2.0 U	NA	NA	NA	2.0 U	NA	NA	2.0 U	NA	2.0 U	NA
	1,2,3-Trichlorobenzene	NS	NS	50 U	2.0 U	4.0 U	2.0 U	2.0 U	2.0 U	2.0 U	2.0 U	2.0 U	2.0 U	2.0 U	2.0 U	2.0 U	2.0 U	NA	2.0 U	2.0 U	2.0 U	2.0 U	NA	NA	NA	2.0 U	NA	NA	2.0 U	NA	2.0 U	NA
	1,2,4-Trichlorobenzene	200	50,000	50 U	2.0 U	4.0 U	2.0 U	2.0 U	2.0 U	2.0 U	2.0 U	2.0 U	2.0 U	2.0 U	2.0 U	2.0 U	2.0 U	NA	**4.7**	**4.4**	**12**	**3.4**	NA	NA	NA	**5.0**	NA	NA	2.0 U	NA	2.0 U	NA
	1,3,5-Trimethylbenzene	4,000[(1)]	50,000[(1)]	50 U	2.0 U	4.0 U	2.0 U	2.0 U	2.0 U	2.0 U	2.0 U	2.0 U	2.0 U	2.0 U	2.0 U	2.0 U	2.0 U	NA	2.0 U	2.0 U	2.0 U	2.0 U	NA	NA	NA	2.0 U	NA	NA	2.0 U	NA	2.0 U	NA
	1,2,4-Trimethylbenzene	4,000[(1)]	50,000[(1)]	50 U	2.0 U	4.0 U	2.0 U	2.0 U	2.0 U	2.0 U	2.0 U	2.0 U	2.0 U	2.0 U	2.0 U	2.0 U	2.0 U	NA	2.0 U	2.0 U	2.0 U	2.0 U	NA	NA	NA	2.0 U	NA	NA	2.0 U	NA	2.0 U	NA
	Diisopropyl Ether (DIPE)	NS	NS	50 U	2.0 U	4.0 U	2.0 U	2.0 U	2.0 U	2.0 U	2.0 U	2.0 U	2.0 U	2.0 U	2.0 U	2.0 U	2.0 U	NA	2.0 U	2.0 U	2.0 U	2.0 U	NA	NA	NA	2.0 U	NA	NA	2.0 U	NA	2.0 U	NA
	tert-Butyl Ethyl Ether (TBEE)	NS	NS	50 U	2.0 U	4.0 U	2.0 U	2.0 U	2.0 U	2.0 U	2.0 U	2.0 U	2.0 U	2.0 U	2.0 U	2.0 U	2.0 U	NA	2.0 U	2.0 U	2.0 U	2.0 U	NA	NA	NA	2.0 U	NA	NA	2.0 U	NA	2.0 U	NA
	tert-Amyl Methyl Ether (TAME)	NS	NS	50 U	2.0 U	4.0 U	2.0 U	2.0 U	2.0 U	2.0 U	2.0 U	2.0 U	2.0 U	2.0 U	2.0 U	2.0 U	2.0 U	NA	2.0 U	2.0 U	2.0 U	2.0 U	NA	NA	NA	2.0 U	NA	NA	2.0 U	NA	2.0 U	NA
	1,4-Dioxane	6,000	50,000	6,200 U	250 U	500 U	250 U	250 U	250 U	250 U	250 U	250 U	250 U	250 U	250 U	250 U	250 U	NA	250 U	250 U	250 U	250 U	NA	NA	NA	250 U	NA	NA	250 U	NA	250 U	NA
	Diethyl Ether	NS	NS	50 U	2.0 U	4.0 U	2.0 U	2.0 U	2.0 U	2.0 U	2.0 U	2.0 U	2.0 U	2.0 U	2.0 U	2.0 U	2.0 U	NA	2.0 U	2.0 U	2.0 U	2.0 U	NA	NA	NA	2.0 U	NA	NA	2.0 U	NA	2.0 U	NA

Table 2
Summary of Analytical Results for Groundwater Samples --
2008 through 2015
New Bedford High School
New Bedford, Massachusetts

Analysis	Analyte	Sample ID:		MW-32							MW-33					MW-40			MW-41												
		Filter Size (micron)^:		N/A	N/A	N/A	N/A	N/A	N/A	N/A	N/A	N/A	N/A	N/A	N/A	N/A	N/A	0.45	N/A	N/A	N/A	N/A	2.0	0.45	0.20	N/A	0.45	0.20	N/A	0.45	N/A	0.45
		Sample Date:		8/25/2011	2/27/2012	4/11/2012	12/13/2012	1/17/2014	1/5/2015	7/27/2015	10/21/2010	3/8/2011	4/12/2011	8/24/2011	4/11/2012	7/3/2012	1/17/2014	1/17/2014	7/3/2012	7/3/2012	12/13/2012	1/17/2014	1/17/2014	1/17/2014	1/17/2014	2/21/2014	2/21/2014	2/21/2014	1/5/2015	1/5/2015	7/27/2015	7/27/2015
		GW-2	GW-3																	Field Dup					**							
PAHs																																
(ug/L)	Acenaphthene	NS	10,000	NA	NA	NA	NA	NA	NA	NA	NA	NA	NA	NA	NA	NA	NA	NA	NA	NA	NA	NA	NA	NA	NA	NA	NA	NA	NA	NA	NA	NA
	Acenaphthylene	10,000	40	NA	NA	NA	NA	NA	NA	NA	NA	NA	NA	NA	NA	NA	NA	NA	NA	NA	NA	NA	NA	NA	NA	NA	NA	NA	NA	NA	NA	NA
	Anthracene	NS	30	NA	NA	NA	NA	NA	NA	NA	NA	NA	NA	NA	NA	NA	NA	NA	NA	NA	NA	NA	NA	NA	NA	NA	NA	NA	NA	NA	NA	NA
	Benzo(a)anthracene	NS	1,000	NA	NA	NA	NA	NA	NA	NA	NA	NA	NA	NA	NA	NA	NA	NA	NA	NA	NA	NA	NA	NA	NA	NA	NA	NA	NA	NA	NA	NA
	Benzo(a)pyrene	NS	500	NA	NA	NA	NA	NA	NA	NA	NA	NA	NA	NA	NA	NA	NA	NA	NA	NA	NA	NA	NA	NA	NA	NA	NA	NA	NA	NA	NA	NA
	Benzo(b)fluoranthene	NS	400	NA	NA	NA	NA	NA	NA	NA	NA	NA	NA	NA	NA	NA	NA	NA	NA	NA	NA	NA	NA	NA	NA	NA	NA	NA	NA	NA	NA	NA
	Benzo(g,h,i)perylene	NS	20	NA	NA	NA	NA	NA	NA	NA	NA	NA	NA	NA	NA	NA	NA	NA	NA	NA	NA	NA	NA	NA	NA	NA	NA	NA	NA	NA	NA	NA
	Benzo(k)fluoranthene	NS	100	NA	NA	NA	NA	NA	NA	NA	NA	NA	NA	NA	NA	NA	NA	NA	NA	NA	NA	NA	NA	NA	NA	NA	NA	NA	NA	NA	NA	NA
	Chrysene	NS	70	NA	NA	NA	NA	NA	NA	NA	NA	NA	NA	NA	NA	NA	NA	NA	NA	NA	NA	NA	NA	NA	NA	NA	NA	NA	NA	NA	NA	NA
	Dibenz(a,h)anthracene	NS	40	NA	NA	NA	NA	NA	NA	NA	NA	NA	NA	NA	NA	NA	NA	NA	NA	NA	NA	NA	NA	NA	NA	NA	NA	NA	NA	NA	NA	NA
	Fluoranthene	NS	200	NA	NA	NA	NA	NA	NA	NA	NA	NA	NA	NA	NA	NA	NA	NA	NA	NA	NA	NA	NA	NA	NA	NA	NA	NA	NA	NA	NA	NA
	Fluorene	NS	40	NA	NA	NA	NA	NA	NA	NA	NA	NA	NA	NA	NA	NA	NA	NA	NA	NA	NA	NA	NA	NA	NA	NA	NA	NA	NA	NA	NA	NA
	Indeno(1,2,3-cd)pyrene	NS	100	NA	NA	NA	NA	NA	NA	NA	NA	NA	NA	NA	NA	NA	NA	NA	NA	NA	NA	NA	NA	NA	NA	NA	NA	NA	NA	NA	NA	NA
	2-Methylnaphthalene	2,000	20,000	NA	NA	NA	NA	NA	NA	NA	NA	NA	NA	NA	NA	NA	NA	NA	NA	NA	NA	NA	NA	NA	NA	NA	NA	NA	NA	NA	NA	NA
	Naphthalene	700	20,000	NA	NA	NA	NA	NA	NA	NA	NA	NA	NA	NA	NA	NA	NA	NA	NA	NA	NA	NA	NA	NA	NA	NA	NA	NA	NA	NA	NA	NA
	Phenanthrene	NS	10,000	NA	NA	NA	NA	NA	NA	NA	NA	NA	NA	NA	NA	NA	NA	NA	NA	NA	NA	NA	NA	NA	NA	NA	NA	NA	NA	NA	NA	NA
	Pyrene	NS	20	NA	NA	NA	NA	NA	NA	NA	NA	NA	NA	NA	NA	NA	NA	NA	NA	NA	NA	NA	NA	NA	NA	NA	NA	NA	NA	NA	NA	NA
PCBs																																
(ug/L)	Aroclor 1016	NS	NS	0.0500 U	0.0500 U	0.0500 U	0.25 U	NA	0.250 U	0.250 U	NA	NA	NA	0.0500 U	0.0500 U	0.25 U	0.250 U	0.250 U	0.25 U	0.50 U	1.0 U	NA	0.250 U	0.250 U	0.250 U	0.500 U	0.250 U	0.250 U	1.25 U	0.250 U	0.250 U	0.250 U
	Aroclor 1221	NS	NS	0.0500 U	0.0500 U	0.0500 U	0.25 U	NA	0.250 U	0.250 U	NA	NA	NA	0.0500 U	0.0500 U	0.25 U	0.250 U	0.250 U	0.25 U	0.50 U	1.0 U	NA	0.250 U	0.250 U	0.250 U	0.500 U	0.250 U	0.250 U	1.25 U	0.250 U	0.250 U	0.250 U
	Aroclor 1232	NS	NS	0.0500 U	0.0500 U	0.0500 U	0.25 U	NA	0.250 U	0.250 U	NA	NA	NA	0.0500 U	0.0500 U	0.25 U	0.250 U	0.250 U	0.25 U	0.50 U	1.0 U	NA	0.250 U	0.250 U	0.250 U	0.500 U	0.250 U	0.250 U	1.25 U	0.250 U	0.250 U	0.250 U
	Aroclor 1242	NS	NS	0.0500 U	0.0500 U	0.0500 U	0.25 U	NA	0.250 U	0.250 U	NA	NA	NA	0.0500 U	0.0500 U	0.25 U	0.250 U	0.250 U	0.25 U	0.50 U	**6.06**	NA	0.250 U	0.250 U	0.250 U	0.500 U	0.250 U	0.250 U	**8.88**	**1.06**	0.250 U	0.250 U
	Aroclor 1248	NS	NS	0.0500 U	**0.0889**	**0.0858 J**	0.25 U	NA	0.250 U	0.250 U	NA	NA	NA	0.0500 U	**0.0242 J**	0.25 U	0.250 U	0.250 U	0.25 U	0.50 U	1.0 U	NA	0.250 U	0.250 U	0.250 U	0.500 U	0.250 U	0.250 U	1.25 U	0.250 U	0.250 U	0.250 U
	Aroclor 1254	NS	NS	**0.121**	**0.2420**	**0.147 J**	0.25 U	NA	**0.262**	0.250 U	NA	NA	NA	**0.0630**	**0.0228 J**	0.25 U	0.250 U	0.250 U	**5.51**	**6.41**	**9.69**	NA	**3.25**	**1.59**	0.250 U	**5.27**	0.250 U	0.250 U	**6.29**	**0.874**	**3.00**	0.250 U
	Aroclor 1260	NS	NS	0.0500 U	0.0500 U	0.0500 U	0.25 U	NA	0.250 U	0.250 U	NA	NA	NA	0.0500 U	0.0500 U	0.25 U	0.250 U	0.250 U	0.25 U	0.50 U	1.0 U	NA	0.250 U	0.250 U	0.250 U	0.500 U	0.250 U	0.250 U	1.25 U	0.250 U	0.250 U	0.250 U
	Aroclor 1262	NS	NS	NA	NA	NA	0.25 U	NA	0.250 U	0.250 U	NA	NA	NA	NA	NA	0.25 U	0.250 U	0.250 U	0.25 U	0.50 U	1.0 U	NA	0.250 U	0.250 U	0.250 U	0.500 U	0.250 U	0.250 U	1.25 U	0.250 U	0.250 U	0.250 U
	Aroclor 1268	NS	NS	NA	NA	NA	0.25 U	NA	0.250 U	0.250 U	NA	NA	NA	NA	NA	0.25 U	0.250 U	0.250 U	0.25 U	0.50 U	1.0 U	NA	0.250 U	0.250 U	0.250 U	0.500 U	0.250 U	0.250 U	1.25 U	0.250 U	0.250 U	0.250 U
	Total PCBs	5	10	**0.121**	**0.3309**	**0.2328 J**	0.25 U	NA	**0.262**	0.250 U	NA	NA	NA	**0.0630**	**0.0470 J**	0.25 U	0.250 U	0.250 U	**5.51**	**6.41**	**15.75**	NA	**3.25**	**1.59**	0.250 U	**5.27**	0.250 U	0.250 U	**15.2**	**1.93**	**3.00**	0.250 U
Total Petroleum Hydrocarbons																																
(ug/L)	Total Petroleum Hydrocarbons (C9-C44)	5,000	5,000	NA	NA	NA	NA	NA	NA	NA	NA	NA	NA	NA	NA	NA	NA	NA	NA	NA	NA	NA	NA	NA	NA	NA	NA	NA	NA	NA	NA	NA
Metals, total																																
(ug/L)	Antimony	NS	8,000	NA	NA	NA	NA	NA	NA	NA	NA	NA	NA	NA	NA	NA	NA	NA	NA	NA	NA	NA	NA	NA	NA	NA	NA	NA	NA	NA	NA	NA
	Arsenic	NS	900	NA	NA	NA	NA	NA	NA	NA	NA	NA	NA	NA	NA	NA	NA	NA	NA	NA	NA	NA	NA	NA	NA	NA	NA	NA	NA	NA	NA	NA
	Barium	NS	50,000	NA	NA	NA	NA	NA	NA	NA	NA	NA	NA	NA	NA	NA	NA	NA	NA	NA	NA	NA	NA	NA	NA	NA	NA	NA	NA	NA	NA	NA
	Beryllium	NS	200	NA	NA	NA	NA	NA	NA	NA	NA	NA	NA	NA	NA	NA	NA	NA	NA	NA	NA	NA	NA	NA	NA	NA	NA	NA	NA	NA	NA	NA
	Cadmium	NS	4	NA	NA	NA	NA	NA	NA	NA	NA	NA	NA	NA	NA	NA	NA	NA	NA	NA	NA	NA	NA	NA	NA	NA	NA	NA	NA	NA	NA	NA
	Chromium	NS	300	NA	NA	NA	NA	NA	NA	NA	NA	NA	NA	NA	NA	NA	NA	NA	NA	NA	NA	NA	NA	NA	NA	NA	NA	NA	NA	NA	NA	NA
	Lead	NS	10	NA	NA	NA	NA	NA	NA	NA	NA	NA	NA	NA	NA	NA	NA	NA	NA	NA	NA	NA	NA	NA	NA	NA	NA	NA	NA	NA	NA	NA
	Mercury	NS	20	NA	NA	NA	NA	NA	NA	NA	NA	NA	NA	NA	NA	NA	NA	NA	NA	NA	NA	NA	NA	NA	NA	NA	NA	NA	NA	NA	NA	NA
	Nickel	NS	200	NA	NA	NA	NA	NA	NA	NA	NA	NA	NA	NA	NA	NA	NA	NA	NA	NA	NA	NA	NA	NA	NA	NA	NA	NA	NA	NA	NA	NA
	Selenium	NS	100	NA	NA	NA	NA	NA	NA	NA	NA	NA	NA	NA	NA	NA	NA	NA	NA	NA	NA	NA	NA	NA	NA	NA	NA	NA	NA	NA	NA	NA
	Silver	NS	7	NA	NA	NA	NA	NA	NA	NA	NA	NA	NA	NA	NA	NA	NA	NA	NA	NA	NA	NA	NA	NA	NA	NA	NA	NA	NA	NA	NA	NA
	Thallium	NS	3,000	NA	NA	NA	NA	NA	NA	NA	NA	NA	NA	NA	NA	NA	NA	NA	NA	NA	NA	NA	NA	NA	NA	NA	NA	NA	NA	NA	NA	NA
	Vanadium	NS	4,000	NA	NA	NA	NA	NA	NA	NA	NA	NA	NA	NA	NA	NA	NA	NA	NA	NA	NA	NA	NA	NA	NA	NA	NA	NA	NA	NA	NA	NA
	Zinc	NS	900	NA	NA	NA	NA	NA	NA	NA	NA	NA	NA	NA	NA	NA	NA	NA	NA	NA	NA	NA	NA	NA	NA	NA	NA	NA	NA	NA	NA	NA
Metals, dissolved																																
(ug/L)	Antimony	NS	8,000	NA	NA	NA	NA	NA	NA	NA	NA	NA	NA	NA	NA	NA	NA	NA	NA	NA	NA	NA	NA	NA	NA	NA	NA	NA	NA	NA	NA	NA
	Arsenic	NS	900	NA	NA	NA	NA	NA	NA	NA	NA	NA	NA	NA	NA	NA	NA	NA	NA	NA	NA	NA	NA	NA	NA	NA	NA	NA	NA	NA	NA	NA
	Barium	NS	50,000	NA	NA	NA	NA	NA	NA	NA	NA	NA	NA	NA	NA	NA	NA	NA	NA	NA	NA	NA	NA	NA	NA	NA	NA	NA	NA	NA	NA	NA
	Beryllium	NS	200	NA	NA	NA	NA	NA	NA	NA	NA	NA	NA	NA	NA	NA	NA	NA	NA	NA	NA	NA	NA	NA	NA	NA	NA	NA	NA	NA	NA	NA
	Cadmium	NS	4	NA	NA	NA	NA	NA	NA	NA	NA	NA	NA	NA	NA	NA	NA	NA	NA	NA	NA	NA	NA	NA	NA	NA	NA	NA	NA	NA	NA	NA
	Chromium	NS	300	NA	NA	NA	NA	NA	NA	NA	NA	NA	NA	NA	NA	NA	NA	NA	NA	NA	NA	NA	NA	NA	NA	NA	NA	NA	NA	NA	NA	NA
	Lead	NS	10	NA	NA	NA	NA	NA	NA	NA	NA	NA	NA	NA	NA	NA	NA	NA	NA	NA	NA	NA	NA	NA	NA	NA	NA	NA	NA	NA	NA	NA
	Mercury	NS	20	NA	NA	NA	NA	NA	NA	NA	NA	NA	NA	NA	NA	NA	NA	NA	NA	NA	NA	NA	NA	NA	NA	NA	NA	NA	NA	NA	NA	NA
	Nickel	NS	200	NA	NA	NA	NA	NA	NA	NA	NA	NA	NA	NA	NA	NA	NA	NA	NA	NA	NA	NA	NA	NA	NA	NA	NA	NA	NA	NA	NA	NA
	Selenium	NS	100	NA	NA	NA	NA	NA	NA	NA	NA	NA	NA	NA	NA	NA	NA	NA	NA	NA	NA	NA	NA	NA	NA	NA	NA	NA	NA	NA	NA	NA
	Silver	NS	7	NA	NA	NA	NA	NA	NA	NA	NA	NA	NA	NA	NA	NA	NA	NA	NA	NA	NA	NA	NA	NA	NA	NA	NA	NA	NA	NA	NA	NA
	Thallium	NS	3,000	NA	NA	NA	NA	NA	NA	NA	NA	NA	NA	NA	NA	NA	NA	NA	NA	NA	NA	NA	NA	NA	NA	NA	NA	NA	NA	NA	NA	NA
	Vanadium	NS	4,000	NA	NA	NA	NA	NA	NA	NA	NA	NA	NA	NA	NA	NA	NA	NA	NA	NA	NA	NA	NA	NA	NA	NA	NA	NA	NA	NA	NA	NA
	Zinc	NS	900	NA	NA	NA	NA	NA	NA	NA	NA	NA	NA	NA	NA	NA	NA	NA	NA	NA	NA	NA	NA	NA	NA	NA	NA	NA	NA	NA	NA	NA
General Chemistry																																
(ug/L)	Nitrogen, Nitrate	NS	NS	NA	NA	NA	NA	NA	NA	NA	NA	NA	NA	NA	NA	NA	NA	NA	NA	NA	NA	NA	NA	NA	NA	NA	NA	NA	NA	NA	NA	NA
	Sulfate	NS	NS	NA	NA	NA	NA	NA	NA	NA	NA	NA	NA	NA	NA	NA	NA	NA	NA	NA	NA	NA	NA	NA	NA	NA	NA	NA	NA	NA	NA	NA
	Total Organic Carbon	NS	NS	NA	NA	NA	NA	NA	NA	NA	NA	NA	NA	NA	NA	NA	NA	NA	NA	NA	NA	NA	NA	NA	NA	NA	NA	NA	NA	NA	NA	NA

Notes:
ug/L - micrograms per liter.
B - Compound detected in associated method blank
J - Estimated value.
NA - Sample not analyzed for the listed analyte.
N/A - Not applicable.
NS - No MassDEP standards exist for this compound.
U - Compound was not detected at specified quantitation limit.
Values in **Bold** indicate the compound was detected.
VOCs - Volatile Organic Compounds.
PAHs - Polynuclear Aromatic Hydrocarbons.
PCBs - Polychlorinated Biphenyls.
(1) - MassDEP Method 1 standards for C9-C10 aromatic hydrocarbons used.
(2) - MassDEP Method 1 standards for 1,3-Dichloropropene used.
(3) - criteria applicable to xylene (total), the sum of the xylene isomers.
^ - 0.45 micron filtration done in field; 0.20 and 2.0 micron filtration performed in lab.
* - Sample collected on 4/10/2012 for PCB analysis was broken and was recollected on 4/18/2012.
** - Lab filtered sample using a 2.0 micron filter and then filtered a second time using a 0.20 micron fil

Table 2
Summary of Analytical Results for Groundwater Samples --
2008 through 2015
New Bedford High School
New Bedford, Massachusetts

Analysis	Analyte		Sample ID:	MW-42R																		MW-HH-13			MW-HRC-33			TMW-BC2		TMW-BC3	
		Filter Size (micron)^:		N/A	N/A	N/A	N/A	0.45	0.20	N/A	N/A	0.45	0.45	0.20	0.20	N/A	0.45	N/A	N/A	0.45	0.45	N/A	N/A	N/A	N/A	N/A	N/A	Unfiltered	0.45	Unfiltered	0.45
		Sample Date:		9/18/2012	10/18/2012	12/14/2012	2/14/2014	2/14/2014	2/14/2014	2/21/2014	2/21/2014	2/21/2014	2/21/2014	2/21/2014	2/21/2014	1/5/2015	1/5/2015	7/27/2015	7/27/2015	7/27/2015	7/27/2015	4/23/2009	4/23/2009	2/18/2010	4/23/2009	4/23/2009	2/17/2010	7/1/2014	7/1/2014	7/1/2014	7/1/2014
		GW-2	GW-3								Field Dup		Field Dup		Field Dup				Field Dup		Field Dup		Field Dup			Field Dup					
VOCs (ug/L)	Methylene Chloride	2,000	50,000	40 U	20 U	20 U	2.0 U	NA	NA	2.0 U	2.0 U	NA	NA	NA	NA	2.0 U	NA	2.0 U	2.0 U	NA	NA	NA	NA	5.0 U	NA	NA	5.0 U	5.0 U	NA	5.0 U	NA
	1,1-Dichloroethane	2,000	20,000	20 U	10 U	10 U	1.0 U	NA	NA	1.0 U	1.0 U	NA	NA	NA	NA	1.0 U	NA	1.0 U	1.0 U	NA	NA	NA	NA	1.0 U	NA	NA	1.0 U	1.0 U	NA	1.0 U	NA
	Chloroform	50	20,000	20 U	10 U	10 U	1.0 U	NA	NA	1.0 U	1.0 U	NA	NA	NA	NA	1.0 U	NA	1.0 U	1.0 U	NA	NA	NA	NA	1.0 U	NA	NA	1.0 U	2.0 U	NA	2.0 U	NA
	Carbon Tetrachloride	2	5,000	20 U	10 U	10 U	1.0 U	NA	NA	1.0 U	1.0 U	NA	NA	NA	NA	1.0 U	NA	1.0 U	1.0 U	NA	NA	NA	NA	1.0 U	NA	NA	1.0 U	1.0 U	NA	1.0 U	NA
	1,2-Dichloropropane	3	50,000	20 U	10 U	10 U	1.0 U	NA	NA	1.0 U	1.0 U	NA	NA	NA	NA	1.0 U	NA	1.0 U	1.0 U	NA	NA	NA	NA	1.0 U	NA	NA	1.0 U	1.0 U	NA	1.0 U	NA
	Chlorodibromomethane	20	50,000	20 U	10 U	10 U	1.0 U	NA	NA	1.0 U	1.0 U	NA	NA	NA	NA	1.0 U	NA	1.0 U	1.0 U	NA	NA	NA	NA	1.0 U	NA	NA	1.0 U	0.50 U	NA	0.50 U	NA
	1,1,2-Trichloroethane	900	50,000	20 U	10 U	10 U	1.0 U	NA	NA	1.0 U	1.0 U	NA	NA	NA	NA	1.0 U	NA	1.0 U	1.0 U	NA	NA	NA	NA	1.0 U	NA	NA	1.0 U	1.0 U	NA	1.0 U	NA
	Tetrachloroethylene	50	30,000	20 U	10 U	10 U	1.0 U	NA	NA	1.0 U	1.0 U	NA	NA	NA	NA	1.0 U	NA	1.0 U	1.0 U	NA	NA	NA	NA	1.0 U	NA	NA	1.0 U	1.0 U	NA	1.0 U	NA
	Chlorobenzene	200	1,000	20 U	10 U	10 U	1.0 U	NA	NA	1.0 U	1.0 U	NA	NA	NA	NA	1.0 U	NA	1.0 U	1.0 U	NA	NA	NA	NA	1.0 U	NA	NA	1.0 U	1.0 U	NA	1.0 U	NA
	Trichlorofluoromethane (Freon 11)	NS	NS	40 U	20 U	20 U	2.0 U	NA	NA	2.0 U	2.0 U	NA	NA	NA	NA	2.0 U	NA	2.0 U	2.0 U	NA	NA	NA	NA	2.0 U	NA	NA	2.0 U	2.0 U	NA	2.0 U	NA
	1,2-Dichloroethane	5	20,000	20 U	10 U	10 U	1.0 U	NA	NA	1.0 U	1.0 U	NA	NA	NA	NA	1.0 U	NA	1.0 U	1.0 U	NA	NA	NA	NA	1.0 U	NA	NA	1.0 U	5.0 U	NA	5.0 U	NA
	1,1,1-Trichloroethane	4,000	20,000	20 U	10 U	10 U	1.0 U	NA	NA	1.0 U	1.0 U	NA	NA	NA	NA	1.0 U	NA	1.0 U	1.0 U	NA	NA	NA	NA	1.0 U	NA	NA	1.0 U	1.0 U	NA	1.0 U	NA
	Bromodichloromethane	6	50,000	20 U	10 U	10 U	1.0 U	NA	NA	1.0 U	1.0 U	NA	NA	NA	NA	1.0 U	NA	1.0 U	1.0 U	NA	NA	NA	NA	1.0 U	NA	NA	1.0 U	1.0 U	NA	1.0 U	NA
	trans-1,3-Dichloropropene	10[2]	200[2]	10 U	5.0 U	5.0 U	0.50 U	NA	NA	0.50 U	0.50 U	NA	NA	NA	NA	0.50 U	NA	0.50 U	0.50 U	NA	NA	NA	NA	0.50 U	NA	NA	0.50 U	0.40 U	NA	0.40 U	NA
	cis-1,3-Dichloropropene	10[2]	200[2]	10 U	5.0 U	5.0 U	0.50 U	NA	NA	0.50 U	0.50 U	NA	NA	NA	NA	0.50 U	NA	0.50 U	0.50 U	NA	NA	NA	NA	0.50 U	NA	NA	0.50 U	0.40 U	NA	0.40 U	NA
	1,3-Dichloropropene, Total	10	200	NA	NA	NA	NA	NA	NA	NA	NA	NA	NA	NA	NA	0.50 U	NA	0.50 U	0.50 U	NA	NA	NA	NA	NA	NA	NA	NA	NA	NA	NA	NA
	1,1-Dichloropropene	NS	NS	40 U	20 U	20 U	2.0 U	NA	NA	2.0 U	2.0 U	NA	NA	NA	NA	2.0 U	NA	2.0 U	2.0 U	NA	NA	NA	NA	2.0 U	NA	NA	2.0 U	0.50 U	NA	0.50 U	NA
	Bromoform	700	50,000	40 U	20 U	20 U	2.0 U	NA	NA	2.0 U	2.0 U	NA	NA	NA	NA	2.0 U	NA	2.0 U	2.0 U	NA	NA	NA	NA	2.0 U	NA	NA	2.0 U	1.0 U	NA	1.0 U	NA
	1,1,2,2-Tetrachloroethane	9	50,000	20 U	10 U	10 U	1.0 U	NA	NA	1.0 U	1.0 U	NA	NA	NA	NA	1.0 U	NA	1.0 U	1.0 U	NA	NA	NA	NA	1.0 U	NA	NA	1.0 U	0.50 U	NA	0.50 U	NA
	Benzene	1,000	10,000	10 U	5.0 U	5.0 U	0.50 U	NA	NA	0.50 U	0.50 U	NA	NA	NA	NA	0.50 U	NA	0.50 U	0.50 U	NA	NA	NA	NA	1.0 U	NA	NA	1.0 U	1.0 U	NA	1.0 U	NA
	Toluene	50,000	40,000	20 U	10 U	10 U	1.0 U	NA	NA	1.0 U	1.0 U	NA	NA	NA	NA	1.0 U	NA	1.0 U	1.0 U	NA	NA	NA	NA	1.0 U	NA	NA	1.0 U	1.0 U	NA	1.0 U	NA
	Ethylbenzene	20,000	5,000	20 U	10 U	10 U	1.0 U	NA	NA	1.0 U	1.0 U	NA	NA	NA	NA	1.0 U	NA	1.0 U	1.0 U	NA	NA	NA	NA	1.0 U	NA	NA	1.0 U	1.0 U	NA	1.0 U	NA
	Chloromethane	NS	NS	40 U	20 U	20 U	2.0 U	NA	NA	2.0 U	2.0 U	NA	NA	NA	NA	2.0 U	NA	2.0 U	2.0 U	NA	NA	NA	NA	2.0 U	NA	NA	2.0 U	5.0 U	NA	5.0 U	NA
	Bromomethane	7	800	40 U	20 U	20 U	2.0 U	NA	NA	2.0 U	2.0 U	NA	NA	NA	NA	2.0 U	NA	2.0 U	2.0 U	NA	NA	NA	NA	5.0 U	NA	NA	5.0 U	5.0 U	NA	5.0 U	NA
	Vinyl Chloride	2	50,000	**58**	**29**	**34**	**8.2**	NA	NA	**110**	**97**	NA	NA	NA	NA	**43**	NA	**4.4**	**4.4**	NA	NA	NA	NA	1.0 U	NA	NA	1.0 U	2.0 U	NA	**2.5**	NA
	Chloroethane	NS	NS	40 U	20 U	20 U	2.0 U	NA	NA	2.0 U	2.0 U	NA	NA	NA	NA	2.0 U	NA	2.0 U	2.0 U	NA	NA	NA	NA	2.0 U	NA	NA	2.0 U	2.0 U	NA	2.0 U	NA
	1,1-Dichloroethylene	80	30,000	20 U	10 U	10 U	1.0 U	NA	NA	1.0 U	1.0 U	NA	NA	NA	NA	1.0 U	NA	1.0 U	1.0 U	NA	NA	NA	NA	1.0 U	NA	NA	1.0 U	1.0 U	NA	1.0 U	NA
	trans-1,2-Dichloroethylene	80	50,000	**250**	**180**	**160**	**2.9**	NA	NA	**30**	**32**	NA	NA	NA	NA	**6.5**	NA	**2.5**	**2.4**	NA	NA	NA	NA	1.0 U	NA	NA	1.0 U	1.0 U	NA	**1.0**	NA
	Trichloroethylene	5	5,000	**150**	**80**	**59**	**14**	NA	NA	**4.0**	**4.0**	NA	NA	NA	NA	**2.6**	NA	**2.9**	**2.8**	NA	NA	NA	NA	1.0 U	NA	NA	1.0 U	**1.4**	NA	1.0 U	NA
	1,2-Dichlorobenzene	8,000	2,000	20 U	10 U	10 U	1.0 U	NA	NA	1.0 U	1.0 U	NA	NA	NA	NA	1.0 U	NA	1.0 U	1.0 U	NA	NA	NA	NA	1.0 U	NA	NA	1.0 U	1.0 U	NA	1.0 U	NA
	1,3-Dichlorobenzene	6,000	50,000	20 U	10 U	10 U	1.0 U	NA	NA	1.0 U	1.0 U	NA	NA	NA	NA	1.0 U	NA	1.0 U	1.0 U	NA	NA	NA	NA	1.0 U	NA	NA	1.0 U	1.0 U	NA	1.0 U	NA
	1,4-Dichlorobenzene	60	8,000	**26**	**16**	**13**	1.0 U	NA	NA	**3.4**	**3.6**	NA	NA	NA	NA	**2.8**	NA	1.0 U	1.0 U	NA	NA	NA	NA	1.0 U	NA	NA	1.0 U	1.0 U	NA	**1.4**	NA
	Methyl tert-Butyl Ether (MTBE)	50,000	50,000	40 U	20 U	20 U	2.0 U	NA	NA	2.0 U	2.0 U	NA	NA	NA	NA	2.0 U	NA	2.0 U	2.0 U	NA	NA	NA	NA	2.0 U	NA	NA	2.0 U	1.0 U	NA	1.0 U	NA
	m+p Xylene	3,000[3]	5,000[3]	40 U	20 U	20 U	2.0 U	NA	NA	2.0 U	2.0 U	NA	NA	NA	NA	2.0 U	NA	2.0 U	2.0 U	NA	NA	NA	NA	2.0 U	NA	NA	2.0 U	2.0 U	NA	2.0 U	NA
	o-Xylene	3,000[3]	5,000[3]	20 U	10 U	10 U	1.0 U	NA	NA	1.0 U	1.0 U	NA	NA	NA	NA	1.0 U	NA	1.0 U	1.0 U	NA	NA	NA	NA	1.0 U	NA	NA	1.0 U	1.0 U	NA	1.0 U	NA
	Xylene (Total)	3,000	5,000	40 U	20 U	20 U	2.0 U	NA	NA	2.0 U	2.0 U	NA	NA	NA	NA	1.0 U	NA	1.0 U	1.0 U	NA	NA	NA	NA	2.0 U	NA	NA	2.0 U	2.0 U	NA	2.0 U	NA
	cis-1,2-Dichloroethylene	20	50,000	**1,100**	**710**	**530**	**5.6**	NA	NA	**48**	**49**	NA	NA	NA	NA	**6.8**	NA	**4.0**	**3.7**	NA	NA	NA	NA	1.0 U	NA	NA	1.0 U	1.0 U	NA	**4.8**	NA
	1,2-Dichloroethene (total)	NS	NS	NA	NA	NA	NA	NA	NA	NA	NA	NA	NA	NA	NA	**13**	NA	**6.5**	**6.1**	NA	NA	NA	NA	NA	NA	NA	NA	NA	NA	NA	NA
	Dibromomethane	NS	NS	40 U	20 U	20 U	2.0 U	NA	NA	2.0 U	2.0 U	NA	NA	NA	NA	2.0 U	NA	2.0 U	2.0 U	NA	NA	NA	NA	2.0 U	NA	NA	2.0 U	1.0 U	NA	1.0 U	NA
	1,2,3-Trichloropropane	NS	NS	40 U	20 U	20 U	2.0 U	NA	NA	2.0 U	2.0 U	NA	NA	NA	NA	2.0 U	NA	2.0 U	2.0 U	NA	NA	NA	NA	2.0 U	NA	NA	2.0 U	2.0 U	NA	2.0 U	NA
	Styrene	100	6,000	20 U	10 U	10 U	1.0 U	NA	NA	1.0 U	1.0 U	NA	NA	NA	NA	1.0 U	NA	1.0 U	1.0 U	NA	NA	NA	NA	1.0 U	NA	NA	1.0 U	1.0 U	NA	1.0 U	NA
	Dichlorodifluoromethane (Freon 12)	NS	NS	40 U	20 U	20 U	2.0 U	NA	NA	2.0 U	2.0 U	NA	NA	NA	NA	2.0 U	NA	2.0 U	2.0 U	NA	NA	NA	NA	2.0 U	NA	NA	2.0 U	2.0 U	NA	2.0 U	NA
	Acetone	50,000	50,000	100 U	50 U	50 U	5.0 U	NA	NA	5.0 U	5.0 U	NA	NA	NA	NA	5.0 U	NA	5.0 U	5.0 U	NA	NA	NA	NA	5.0 U	NA	NA	5.0 U	20 U	NA	20 U	NA
	Carbon Disulfide	NS	NS	40 U	20 U	20 U	2.0 U	NA	NA	2.0 U	2.0 U	NA	NA	NA	NA	2.0 U	NA	2.0 U	2.0 U	NA	NA	NA	NA	2.0 U	NA	NA	2.0 U	5.0 U	NA	5.0 U	NA
	2-Butanone (MEK)	50,000	50,000	100 U	50 U	50 U	5.0 U	NA	NA	5.0 U	5.0 U	NA	NA	NA	NA	5.0 U	NA	5.0 U	5.0 U	NA	NA	NA	NA	5.0 U	NA	NA	5.0 U	50 U	NA	50 U	NA
	4-Methyl-2-pentanone (MIBK)	50,000	50,000	100 U	50 U	50 U	5.0 U	NA	NA	5.0 U	5.0 U	NA	NA	NA	NA	5.0 U	NA	5.0 U	5.0 U	NA	NA	NA	NA	5.0 U	NA	NA	5.0 U	10 U	NA	10 U	NA
	2-Hexanone (MBK)	NS	NS	100 U	50 U	50 U	5.0 U	NA	NA	5.0 U	5.0 U	NA	NA	NA	NA	5.0 U	NA	5.0 U	5.0 U	NA	NA	NA	NA	5.0 U	NA	NA	5.0 U	10 U	NA	10 U	NA
	Bromochloromethane	NS	NS	40 U	20 U	20 U	2.0 U	NA	NA	2.0 U	2.0 U	NA	NA	NA	NA	2.0 U	NA	2.0 U	2.0 U	NA	NA	NA	NA	2.0 U	NA	NA	2.0 U	1.0 U	NA	1.0 U	NA
	Tetrahydrofuran	NS	NS	100 U	50 U	50 U	2.0 U	NA	NA	2.0 U	2.0 U	NA	NA	NA	NA	2.0 U	NA	2.0 U	2.0 U	NA	NA	NA	NA	10 U	NA	NA	10 U	2.0 U	NA	2.0 U	NA
	2,2-Dichloropropane	NS	NS	40 U	20 U	20 U	2.0 U	NA	NA	2.0 U	2.0 U	NA	NA	NA	NA	2.0 U	NA	2.0 U	2.0 U	NA	NA	NA	NA	2.0 U	NA	NA	2.0 U	1.0 U	NA	1.0 U	NA
	1,2-Dibromoethane (EDB)	2	50,000	40 U	20 U	20 U	2.0 U	NA	NA	2.0 U	2.0 U	NA	NA	NA	NA	2.0 U	NA	2.0 U	2.0 U	NA	NA	NA	NA	2.0 U	NA	NA	2.0 U	0.50 U	NA	0.50 U	NA
	1,3-Dichloropropane	NS	NS	40 U	20 U	20 U	2.0 U	NA	NA	2.0 U	2.0 U	NA	NA	NA	NA	2.0 U	NA	2.0 U	2.0 U	NA	NA	NA	NA	2.0 U	NA	NA	2.0 U	0.50 U	NA	0.50 U	NA
	1,1,1,2-Tetrachloroethane	10	50,000	20 U	10 U	10 U	1.0 U	NA	NA	1.0 U	1.0 U	NA	NA	NA	NA	1.0 U	NA	1.0 U	1.0 U	NA	NA	NA	NA	1.0 U	NA	NA	1.0 U	1.0 U	NA	1.0 U	NA
	Bromobenzene	NS	NS	40 U	20 U	20 U	2.0 U	NA	NA	2.0 U	2.0 U	NA	NA	NA	NA	2.0 U	NA	2.0 U	2.0 U	NA	NA	NA	NA	2.0 U	NA	NA	2.0 U	1.0 U	NA	1.0 U	NA
	n-Butylbenzene	4,000[1]	50,000[1]	40 U	20 U	20 U	2.0 U	NA	NA	2.0 U	2.0 U	NA	NA	NA	NA	2.0 U	NA	2.0 U	2.0 U	NA	NA	NA	NA	2.0 U	NA	NA	2.0 U	1.0 U	NA	1.0 U	NA
	sec-Butylbenzene	4,000[1]	50,000[1]	40 U	20 U	20 U	2.0 U	NA	NA	2.0 U	2.0 U	NA	NA	NA	NA	2.0 U	NA	2.0 U	2.0 U	NA	NA	NA	NA	2.0 U	NA	NA	2.0 U	1.0 U	NA	1.0 U	NA
	tert-Butylbenzene	4,000[1]	50,000[1]	40 U	20 U	20 U	2.0 U	NA	NA	2.0 U	2.0 U	NA	NA	NA	NA	2.0 U	NA	2.0 U	2.0 U	NA	NA	NA	NA	2.0 U	NA	NA	2.0 U	1.0 U	NA	1.0 U	NA
	2-Chlorotoluene	NS	NS	40 U	20 U	20 U	2.0 U	NA	NA	2.0 U	2.0 U	NA	NA	NA	NA	2.0 U	NA	2.0 U	2.0 U	NA	NA	NA	NA	2.0 U	NA	NA	2.0 U	1.0 U	NA	1.0 U	NA
	4-Chlorotoluene	NS	NS	40 U	20 U	20 U	2.0 U	NA	NA	2.0 U	2.0 U	NA	NA	NA	NA	2.0 U	NA	2.0 U	2.0 U	NA	NA	NA	NA	2.0 U	NA	NA	2.0 U	1.0 U	NA	1.0 U	NA
	1,2-Dibromo-3-chloropropane (DBCP)	NS	NS	40 U	20 U	20 U	2.0 U	NA	NA	2.0 U	2.0 U	NA	NA	NA	NA	2.0 U	NA	2.0 U	2.0 U	NA	NA	NA	NA	5.0 U	NA	NA	5.0 U	5.0 U	NA	5.0 U	NA
	Hexachlorobutadiene	50	3,000	12 U	6.0 U	6.0 U	0.60 U	NA	NA	0.60 U	0.60 U	NA	NA	NA	NA	0.60 U	NA	0.6 U	0.60 U	NA	NA	NA	NA	0.60 U	NA	NA	0.60 U	0.50 U	NA	0.50 U	NA
	Isopropylbenzene (Cumene)	4,000[1]	50,000[1]	40 U	20 U	20 U	2.0 U	NA	NA	2.0 U	2.0 U	NA	NA	NA	NA	2.0 U	NA	2.0 U	2.0 U	NA	NA	NA	NA	2.0 U	NA	NA	2.0 U	1.0 U	NA	1.0 U	NA
	p-Isopropyltoluene (p-Cymene)	4,000[1]	50,000[1]	40 U	20 U	20 U	2.0 U	NA	NA	2.0 U	2.0 U	NA	NA	NA	NA	2.0 U	NA	2.0 U	2.0 U	NA	NA	NA	NA	2.0 U	NA	NA	2.0 U	1.0 U	NA	1.0 U	NA
	Naphthalene	700	20,000	40 U	20 U	20 U	2.0 U	NA	NA	2.0 U	2.0 U	NA	NA	NA	NA	2.0 U	NA	2.0 U	2.0 U	NA	NA	NA	NA	5.0 U	NA	NA	5.0 U	2.0 U	NA	2.0 U	NA
	n-Propylbenzene	4,000[1]	50,000[1]	40 U	20 U	20 U	2.0 U	NA	NA	2.0 U	2.0 U	NA	NA	NA	NA	2.0 U	NA	2.0 U	2.0 U	NA	NA	NA	NA	2.0 U	NA	NA	2.0 U	1.0 U	NA	1.0 U	NA
	1,2,3-Trichlorobenzene	NS	NS	40 U	20 U	20 U	2.0 U	NA	NA	2.0 U	2.0 U	NA	NA	NA	NA	2.0 U	NA	2.0 U	2.0 U	NA	NA	NA	NA	2.0 U	NA	NA	2.0 U	2.0 U	NA	2.0 U	NA
	1,2,4-Trichlorobenzene	200	50,000	40 U	20 U	20 U	2.0 U	NA	NA	2.0 U	2.0 U	NA	NA	NA	NA	2.0 U	NA	2.0 U	2.0 U	NA	NA	NA	NA	2.0 U	NA	NA	2.0 U	1.0 U	NA	1.0 U	NA
	1,3,5-Trimethylbenzene	4,000[1]	50,000[1]	40 U	20 U	20 U	2.0 U	NA	NA	2.0 U	2.0 U	NA	NA	NA	NA	2.0 U	NA	2.0 U	2.0 U	NA	NA	NA	NA	2.0 U	NA	NA	2.0 U	1.0 U	NA	1.0 U	NA
	1,2,4-Trimethylbenzene	4,000[1]	50,000[1]	40 U	20 U	20 U	2.0 U	NA	NA	2.0 U	2.0 U	NA	NA	NA	NA	2.0 U	NA	2.0 U	2.0 U	NA	NA	NA	NA	2.0 U	NA	NA	2.0 U	1.0 U	NA	1.0 U	NA
	Diisopropyl Ether (DIPE)	NS	NS	40 U	20 U	20 U	2.0 U	NA	NA	2.0 U	2.0 U	NA	NA	NA	NA	2.0 U	NA	2.0 U	2.0 U	NA	NA	NA	NA	2.0 U	NA	NA	2.0 U	0.50 U	NA	0.50 U	NA
	tert-Butyl Ethyl Ether (TBEE)	NS	NS	40 U	20 U	20 U	2.0 U	NA	NA	2.0 U	2.0 U	NA	NA	NA	NA	2.0 U	NA	2.0 U	2.0 U	NA	NA	NA	NA	2.0 U	NA	NA	2.0 U	0.50 U	NA	0.50 U	NA
	tert-Amyl Methyl Ether (TAME)	NS	NS	40 U	20 U	20 U	2.0 U	NA	NA	2.0 U	2.0 U	NA	NA	NA	NA	2.0 U	NA	2.0 U	2.0 U	NA	NA	NA	NA	2.0 U	NA	NA	2.0 U	0.50 U	NA	0.50 U	NA
	1,4-Dioxane	6,000	50,000	5,000 U	2,500 U	2,500 U	250 U	NA	NA	250 U	250 U	NA	NA	NA	NA	250 U	NA	250 U	250 U	NA	NA	NA	NA	250 U	NA	NA	250 U	50 U	NA	50 U	NA
	Diethyl Ether	NS	NS	40 U	20 U	20 U	2.0 U	NA	NA	2.0 U	2.0 U	NA	NA	NA	NA	2.0 U	NA	2.0 U	2.0 U	NA	NA	NA	NA	2.0 U	NA	NA	2.0 U	2.0 U	NA	2.0 U	NA

Table 2
Summary of Analytical Results for Groundwater Samples --
2008 through 2015
New Bedford High School
New Bedford, Massachusetts

Analysis	Analyte		Sample ID:	MW-42R																		MW-HH-13			MW-HRC-33			TMW-BC2		TMW-BC3	
		Filter Size (micron)^:		N/A	N/A	N/A	N/A	0.45	0.20	N/A	N/A	0.45	0.45	0.20	0.20	N/A	0.45	N/A	N/A	0.45	0.45	N/A	N/A	N/A	N/A	N/A	N/A	Unfiltered	0.45	Unfiltered	0.45
		Sample Date:		9/18/2012	10/18/2012	12/14/2012	2/14/2014	2/14/2014	2/14/2014	2/21/2014	2/21/2014	2/21/2014	2/21/2014	2/21/2014	2/21/2014	1/5/2015	1/5/2015	7/27/2015	7/27/2015	7/27/2015	7/27/2015	4/23/2009	4/23/2009	2/18/2010	4/23/2009	4/23/2009	2/17/2010	7/1/2014	7/1/2014	7/1/2014	7/1/2014
		GW-2	GW-3								Field Dup		Field Dup		Field Dup				Field Dup		Field Dup		Field Dup			Field Dup					
PAHs																															
(ug/L)	Acenaphthene	NS	10,000	NA	NA	NA	NA	NA	NA	NA	NA	NA	NA	NA	NA	NA	NA	NA	NA	NA	NA	0.30 U	0.30 U	NA	0.30 U	NA	NA	NA	NA	NA	NA
	Acenaphthylene	10,000	40	NA	NA	NA	NA	NA	NA	NA	NA	NA	NA	NA	NA	NA	NA	NA	NA	NA	NA	0.30 U	0.30 U	NA	0.30 U	NA	NA	NA	NA	NA	NA
	Anthracene	NS	30	NA	NA	NA	NA	NA	NA	NA	NA	NA	NA	NA	NA	NA	NA	NA	NA	NA	NA	0.20 U	0.20 U	NA	0.20 U	NA	NA	NA	NA	NA	NA
	Benzo(a)anthracene	NS	1,000	NA	NA	NA	NA	NA	NA	NA	NA	NA	NA	NA	NA	NA	NA	NA	NA	NA	NA	0.05 U	0.05 U	NA	0.05 U	NA	NA	NA	NA	NA	NA
	Benzo(a)pyrene	NS	500	NA	NA	NA	NA	NA	NA	NA	NA	NA	NA	NA	NA	NA	NA	NA	NA	NA	NA	0.10 U	0.10 U	NA	0.10 U	NA	NA	NA	NA	NA	NA
	Benzo(b)fluoranthene	NS	400	NA	NA	NA	NA	NA	NA	NA	NA	NA	NA	NA	NA	NA	NA	NA	NA	NA	NA	0.05 U	0.05 U	NA	0.05 U	NA	NA	NA	NA	NA	NA
	Benzo(g,h,i)perylene	NS	20	NA	NA	NA	NA	NA	NA	NA	NA	NA	NA	NA	NA	NA	NA	NA	NA	NA	NA	0.50 U	0.50 U	NA	0.50 U	NA	NA	NA	NA	NA	NA
	Benzo(k)fluoranthene	NS	100	NA	NA	NA	NA	NA	NA	NA	NA	NA	NA	NA	NA	NA	NA	NA	NA	NA	NA	0.20 U	0.20 U	NA	0.20 U	NA	NA	NA	NA	NA	NA
	Chrysene	NS	70	NA	NA	NA	NA	NA	NA	NA	NA	NA	NA	NA	NA	NA	NA	NA	NA	NA	NA	0.20 U	0.20 U	NA	0.20 U	NA	NA	NA	NA	NA	NA
	Dibenz(a,h)anthracene	NS	40	NA	NA	NA	NA	NA	NA	NA	NA	NA	NA	NA	NA	NA	NA	NA	NA	NA	NA	0.20 U	0.20 U	NA	0.20 U	NA	NA	NA	NA	NA	NA
	Fluoranthene	NS	200	NA	NA	NA	NA	NA	NA	NA	NA	NA	NA	NA	NA	NA	NA	NA	NA	NA	NA	0.50 U	0.50 U	NA	0.50 U	NA	NA	NA	NA	NA	NA
	Fluorene	NS	40	NA	NA	NA	NA	NA	NA	NA	NA	NA	NA	NA	NA	NA	NA	NA	NA	NA	NA	1.0 U	1.0 U	NA	1.0 U	NA	NA	NA	NA	NA	NA
	Indeno(1,2,3-cd)pyrene	NS	100	NA	NA	NA	NA	NA	NA	NA	NA	NA	NA	NA	NA	NA	NA	NA	NA	NA	NA	0.20 U	0.20 U	NA	0.20 U	NA	NA	NA	NA	NA	NA
	2-Methylnaphthalene	2,000	20,000	NA	NA	NA	NA	NA	NA	NA	NA	NA	NA	NA	NA	NA	NA	NA	NA	NA	NA	1.0 U	1.0 U	NA	1.0 U	NA	NA	NA	NA	NA	NA
	Naphthalene	700	20,000	NA	NA	NA	NA	NA	NA	NA	NA	NA	NA	NA	NA	NA	NA	NA	NA	NA	NA	1.0 U	1.0 U	NA	1.0 U	NA	NA	NA	NA	NA	NA
	Phenanthrene	NS	10,000	NA	NA	NA	NA	NA	NA	NA	NA	NA	NA	NA	NA	NA	NA	NA	NA	NA	NA	0.05 U	0.05 U	NA	0.05 U	NA	NA	NA	NA	NA	NA
	Pyrene	NS	20	NA	NA	NA	NA	NA	NA	NA	NA	NA	NA	NA	NA	NA	NA	NA	NA	NA	NA	1.0 U	1.0 U	NA	1.0 U	NA	NA	NA	NA	NA	NA
PCBs																															
(ug/L)	Aroclor 1016	NS	NS	1.25 U	1.25 U	1.0 U	0.500 U	0.250 U	0.250 U	0.250 U	0.500 U	0.250 U	0.250 U	0.250 U	0.250 U	0.500 U	0.250 U	0.250 U	0.250 U	0.250 U	0.250 U	0.050 U	NA	NA	0.050 U	0.050 U	NA	0.20 U	0.20 U	0.20 U	0.20 U
	Aroclor 1221	NS	NS	1.25 U	1.25 U	1.0 U	0.500 U	0.250 U	0.250 U	0.250 U	0.500 U	0.250 U	0.250 U	0.250 U	0.250 U	0.500 U	0.250 U	0.250 U	0.250 U	0.250 U	0.250 U	0.050 U	NA	NA	0.050 U	0.050 U	NA	0.20 U	0.20 U	0.20 U	0.20 U
	Aroclor 1232	NS	NS	1.25 U	1.25 U	1.0 U	0.500 U	0.250 U	0.250 U	0.250 U	0.500 U	0.250 U	0.250 U	0.250 U	0.250 U	0.500 U	0.250 U	0.250 U	0.250 U	0.250 U	0.250 U	0.050 U	NA	NA	0.050 U	0.050 U	NA	0.20 U	0.20 U	0.20 U	0.20 U
	Aroclor 1242	NS	NS	1.25 U	1.25 U	**9.06**	0.500 U	0.250 U	0.250 U	0.250 U	0.500 U	0.250 U	0.250 U	0.250 U	0.250 U	**4.02**	**0.750**	0.250 U	0.250 U	0.250 U	0.250 U	0.050 U	NA	NA	0.050 U	0.050 U	NA	0.20 U	0.20 U	0.20 U	0.20 U
	Aroclor 1248	NS	NS	1.25 U	1.25 U	1.0 U	0.500 U	0.250 U	0.250 U	0.250 U	0.500 U	0.250 U	0.250 U	0.250 U	0.250 U	0.500 U	0.250 U	0.250 U	0.250 U	0.250 U	0.250 U	0.050 U	NA	NA	0.050 U	0.050 U	NA	**1.1**	**0.31**	**1.9**	0.20 U
	Aroclor 1254	NS	NS	**15.7**	**12.8**	**16.6**	**6.66**	0.250 U	0.250 U	**5.29**	**6.34**	0.250 U	0.250 U	0.250 U	0.250 U	**5.10**	**1.39**	**3.43**	**3.83**	**0.548**	0.250 U	0.050 U	NA	NA	0.050 U	0.050 U	NA	**0.86**	0.20 U	**1.1**	0.20 U
	Aroclor 1260	NS	NS	1.25 U	1.25 U	1.0 U	0.500 U	0.250 U	0.250 U	0.250 U	0.500 U	0.250 U	0.250 U	0.250 U	0.250 U	0.500 U	0.250 U	0.250 U	0.250 U	0.250 U	0.250 U	0.050 U	NA	NA	0.050 U	0.050 U	NA	0.20 U	0.20 U	0.20 U	0.20 U
	Aroclor 1262	NS	NS	1.25 U	1.25 U	1.0 U	0.500 U	0.250 U	0.250 U	0.250 U	0.500 U	0.250 U	0.250 U	0.250 U	0.250 U	0.500 U	0.250 U	0.250 U	0.250 U	0.250 U	0.250 U	NA	NA	NA	NA	NA	NA	0.20 U	0.20 U	0.20 U	0.20 U
	Aroclor 1268	NS	NS	1.25 U	1.25 U	1.0 U	0.500 U	0.250 U	0.250 U	0.250 U	0.500 U	0.250 U	0.250 U	0.250 U	0.250 U	0.500 U	0.250 U	0.250 U	0.250 U	0.250 U	0.250 U	NA	NA	NA	NA	NA	NA	0.20 U	0.20 U	0.20 U	0.20 U
	Total PCBs	5	10	**15.7**	**12.8**	**25.66**	**6.66**	0.250 U	0.250 U	**5.29**	**6.34**	0.250 U	0.250 U	0.250 U	0.250 U	**9.12**	**2.14**	**3.43**	**3.83**	**0.548**	0.250 U	0.050 U	NA	NA	0.050 U	0.050 U	NA	**1.96**	**0.31**	**3.0**	0.20 U
Total Petroleum Hydrocarbons																															
(ug/L)	Total Petroleum Hydrocarbons (C9-C44)	5,000	5,000	NA	NA	NA	NA	NA	NA	NA	NA	NA	NA	NA	NA	NA	NA	NA	NA	NA	NA	NA	NA	NA	NA	NA	NA	NA	NA	NA	NA
Metals, total																															
(ug/L)	Antimony	NS	8,000	NA	NA	NA	NA	NA	NA	NA	NA	NA	NA	NA	NA	NA	NA	NA	NA	NA	NA	40.0 U	40.0 U	NA	40.0 U	NA	NA	NA	NA	NA	NA
	Arsenic	NS	900	NA	NA	NA	NA	NA	NA	NA	NA	NA	NA	NA	NA	NA	NA	NA	NA	NA	NA	5.0 U	5.0 U	NA	5.0 U	NA	NA	NA	NA	NA	NA
	Barium	NS	50,000	NA	NA	NA	NA	NA	NA	NA	NA	NA	NA	NA	NA	NA	NA	NA	NA	NA	NA	**5,570**	**5,710**	NA	**157**	NA	NA	NA	NA	NA	NA
	Beryllium	NS	200	NA	NA	NA	NA	NA	NA	NA	NA	NA	NA	NA	NA	NA	NA	NA	NA	NA	NA	2.0 U	2.0 U	NA	2.0 U	NA	NA	NA	NA	NA	NA
	Cadmium	NS	4	NA	NA	NA	NA	NA	NA	NA	NA	NA	NA	NA	NA	NA	NA	NA	NA	NA	NA	2.5 U	2.5 U	NA	2.5 U	NA	NA	NA	NA	NA	NA
	Chromium	NS	300	NA	NA	NA	NA	NA	NA	NA	NA	NA	NA	NA	NA	NA	NA	NA	NA	NA	NA	5.0 U	5.0 U	NA	5.0 U	NA	NA	NA	NA	NA	NA
	Lead	NS	10	NA	NA	NA	NA	NA	NA	NA	NA	NA	NA	NA	NA	NA	NA	NA	NA	NA	NA	7.5 U	7.5 U	NA	**10.5**	NA	NA	NA	NA	NA	NA
	Mercury	NS	20	NA	NA	NA	NA	NA	NA	NA	NA	NA	NA	NA	NA	NA	NA	NA	NA	NA	NA	0.10 U	0.10 U	NA	0.10 U	NA	NA	NA	NA	NA	NA
	Nickel	NS	200	NA	NA	NA	NA	NA	NA	NA	NA	NA	NA	NA	NA	NA	NA	NA	NA	NA	NA	5.0 U	5.0 U	NA	5.0 U	NA	NA	NA	NA	NA	NA
	Selenium	NS	100	NA	NA	NA	NA	NA	NA	NA	NA	NA	NA	NA	NA	NA	NA	NA	NA	NA	NA	30.0 U	30.0 U	NA	30.0 U	NA	NA	NA	NA	NA	NA
	Silver	NS	7	NA	NA	NA	NA	NA	NA	NA	NA	NA	NA	NA	NA	NA	NA	NA	NA	NA	NA	3.0 U	3.0 U	NA	3.0 U	NA	NA	NA	NA	NA	NA
	Thallium	NS	3,000	NA	NA	NA	NA	NA	NA	NA	NA	NA	NA	NA	NA	NA	NA	NA	NA	NA	NA	30.0 U	30.0 U	NA	30.0 U	NA	NA	NA	NA	NA	NA
	Vanadium	NS	4,000	NA	NA	NA	NA	NA	NA	NA	NA	NA	NA	NA	NA	NA	NA	NA	NA	NA	NA	25.0 U	25.0 U	NA	25.0 U	NA	NA	NA	NA	NA	NA
	Zinc	NS	900	NA	NA	NA	NA	NA	NA	NA	NA	NA	NA	NA	NA	NA	NA	NA	NA	NA	NA	**17.0**	**20.0**	NA	**300**	NA	NA	NA	NA	NA	NA
Metals, dissolved																															
(ug/L)	Antimony	NS	8,000	NA	NA	NA	NA	NA	NA	NA	NA	NA	NA	NA	NA	NA	NA	NA	NA	NA	NA	40.0 U	40.0 U	NA	40.0 U	NA	NA	NA	NA	NA	NA
	Arsenic	NS	900	NA	NA	NA	NA	NA	NA	NA	NA	NA	NA	NA	NA	NA	NA	NA	NA	NA	NA	5.0 U	5.0 U	NA	5.0 U	NA	NA	NA	NA	NA	NA
	Barium	NS	50,000	NA	NA	NA	NA	NA	NA	NA	NA	NA	NA	NA	NA	NA	NA	NA	NA	NA	NA	**5,340**	**5,490**	NA	**141**	NA	NA	NA	NA	NA	NA
	Beryllium	NS	200	NA	NA	NA	NA	NA	NA	NA	NA	NA	NA	NA	NA	NA	NA	NA	NA	NA	NA	2.0 U	2.0 U	NA	2.0 U	NA	NA	NA	NA	NA	NA
	Cadmium	NS	4	NA	NA	NA	NA	NA	NA	NA	NA	NA	NA	NA	NA	NA	NA	NA	NA	NA	NA	2.5 U	2.5 U	NA	2.5 U	NA	NA	NA	NA	NA	NA
	Chromium	NS	300	NA	NA	NA	NA	NA	NA	NA	NA	NA	NA	NA	NA	NA	NA	NA	NA	NA	NA	5.0 U	5.0 U	NA	5.0 U	NA	NA	NA	NA	NA	NA
	Lead	NS	10	NA	NA	NA	NA	NA	NA	NA	NA	NA	NA	NA	NA	NA	NA	NA	NA	NA	NA	7.5 U	7.5 U	NA	7.5 U	NA	NA	NA	NA	NA	NA
	Mercury	NS	20	NA	NA	NA	NA	NA	NA	NA	NA	NA	NA	NA	NA	NA	NA	NA	NA	NA	NA	0.10 U	0.10 U	NA	0.10 U	NA	NA	NA	NA	NA	NA
	Nickel	NS	200	NA	NA	NA	NA	NA	NA	NA	NA	NA	NA	NA	NA	NA	NA	NA	NA	NA	NA	5.0 U	5.0 U	NA	5.0 U	NA	NA	NA	NA	NA	NA
	Selenium	NS	100	NA	NA	NA	NA	NA	NA	NA	NA	NA	NA	NA	NA	NA	NA	NA	NA	NA	NA	30.0 U	30.0 U	NA	30.0 U	NA	NA	NA	NA	NA	NA
	Silver	NS	7	NA	NA	NA	NA	NA	NA	NA	NA	NA	NA	NA	NA	NA	NA	NA	NA	NA	NA	3.0 U	3.0 U	NA	3.0 U	NA	NA	NA	NA	NA	NA
	Thallium	NS	3,000	NA	NA	NA	NA	NA	NA	NA	NA	NA	NA	NA	NA	NA	NA	NA	NA	NA	NA	30.0 U	30.0 U	NA	30.0 U	NA	NA	NA	NA	NA	NA
	Vanadium	NS	4,000	NA	NA	NA	NA	NA	NA	NA	NA	NA	NA	NA	NA	NA	NA	NA	NA	NA	NA	25.0 U	25.0 U	NA	25.0 U	NA	NA	NA	NA	NA	NA
	Zinc	NS	900	NA	NA	NA	NA	NA	NA	NA	NA	NA	NA	NA	NA	NA	NA	NA	NA	NA	NA	**14.0**	**15.0**	NA	**270**	NA	NA	NA	NA	NA	NA
General Chemistry																															
(ug/L)	Nitrogen, Nitrate	NS	NS	NA	NA	NA	NA	NA	NA	NA	NA	NA	NA	NA	NA	NA	NA	NA	NA	NA	NA	NA	NA	NA	NA	NA	NA	NA	NA	NA	NA
	Sulfate	NS	NS	NA	NA	NA	NA	NA	NA	NA	NA	NA	NA	NA	NA	NA	NA	NA	NA	NA	NA	NA	NA	NA	NA	NA	NA	NA	NA	NA	NA
	Total Organic Carbon	NS	NS	NA	NA	NA	NA	NA	NA	NA	NA	NA	NA	NA	NA	NA	NA	NA	NA	NA	NA	NA	NA	NA	NA	NA	NA	NA	NA	NA	NA

Notes:
ug/L - micrograms per liter.
B - Compound detected in associated method blank
J - Estimated value.
NA - Sample not analyzed for the listed analyte.
N/A - Not applicable.
NS - No MassDEP standards exist for this compound.
U - Compound was not detected at specified quantitation limit.
Values in **Bold** indicate the compound was detected.
VOCs - Volatile Organic Compounds.
PAHs - Polynuclear Aromatic Hydrocarbons.
PCBs - Polychlorinated Biphenyls.
(1) - MassDEP Method 1 standards for C9-C10 aromatic hydrocarbons used.
(2) - MassDEP Method 1 standards for 1,3-Dichloropropene used.
(3) - criteria applicable to xylene (total), the sum of the xylene isomers.
^ - 0.45 micron filtration done in field; 0.20 and 2.0 micron filtration performed in lab.
* - Sample collected on 4/10/2012 for PCB analysis was broken and was recollected on 4/18/2012.
** - Lab filtered sample using a 2.0 micron filter and then filtered a second time using a 0.20 micron fil

Table 3
Summary of Analytical Results for Indoor Air Samples
2010 through 2015
New Bedford High School
New Bedford, Massachusetts

Analysis	Analyte	Sample Locatoin:	Mechanical Room B-114																Classroom B-116	Senior Honor Lounge Room B-109		
		Sample ID:	TRC-IA-1	TRC-IA-1	IA-2	TRC IA 16		TRC IA 16		TRC IA 16		TRC-IA-16	TRC-IA-16	TRC-IA-16	TRC IA 17	TRC IA 17	TRC IA 17	TRC IA 17	TRC-IA-2	TRC-IA-3	B109	
		Sample Date:	1/31/2010	4/20/2010	8/24/2010	8/22/2014	8/22/2014	9/2/2014	9/2/2014	1/3/2015	1/3/2015	6/22/2015	7/10/2015	7/25/2015	8/22/2014	9/2/2014	1/3/2015	7/25/2015	1/31/2010	1/31/2010	4/8/2011	4/8/2011
		IATV					Field Dup		Field Dup		Field Dup											Field Dup
TO-15																						
(ug/m3)	Vinyl chloride	1.3	**0.562**	**0.853**	0.051 U	0.051 U	0.051 U	0.051 U	0.051 U	0.051 U	0.051 U	0.051 U	0.051 U	0.051 U	0.051 U	0.051 U	0.051 U	0.051 U	0.051 U	0.051 U	0.051 U	0.051 U
	Bromomethane	4.4	0.776 U	0.776 U	0.776 U	0.078 U	0.078 U	0.078 U	0.078 U	0.078 U	0.078 U	0.078 U	0.078 U	0.078 U	0.078 U	0.078 U	0.078 U	0.078 U	0.776 U	0.776 U	0.078 U	0.078 U
	Acetone	710	**3.40**	**2.58**	**7.86**	**64.6**	**67.5**	**83.4**	**84.1**	**59.9**	**56.8**	**59.9**	**52.5**	**70.3**	**62.2**	**82.7**	**50.4**	**65.3**	**3.57**	**29.6**	**4.57**	**5.31**
	1,1-Dichloroethene	180	0.792 U	0.792 U	0.792 U	0.079 U	0.079 U	0.079 U	0.079 U	0.079 U	0.079 U	0.079 U	0.079 U	0.079 U	0.079 U	0.079 U	0.079 U	0.079 U	0.792 U	0.792 U	0.079 U	0.079 U
	Methylene chloride	530	1.74 U	1.74 U	4.86 U	4.86 U	4.86 U	4.86 U	4.86 U	4.86 U	4.86 U	**5.21**	**9.83**	**2.59**	4.86 U	4.86 U	**13.5**	**1.99**	1.74 U	1.74 U	4.86 U	4.86 U
	trans-1,2-Dichloroethene	62	**2.38**	**5.62**	**0.23**	**0.329**	**0.337**	0.079 U	0.079 U	0.079 U	0.079 U	0.079 U	0.079 U	0.079 U	**0.317**	0.079 U	0.079 U	0.079 U	0.079 U	0.079 U	**0.083**	**0.095**
	1,1-Dichloroethane	440	0.809 U	0.809 U	0.809 U	0.081 U	0.081 U	0.081 U	0.081 U	0.081 U	0.081 U	0.081 U	0.081 U	0.081 U	0.081 U	0.081 U	0.081 U	0.081 U	0.809 U	0.809 U	0.081 U	0.081 U
	Methyl tert butyl ether	2700	0.720 U	0.720 U	0.720 U	**0.321**	0.072 U	**0.443**	**0.451**	**0.303**	**0.288**	0.721 U	0.721 U	0.721 U	**0.299**	**0.422**	**0.213**	0.721 U	0.720 U	0.720 U	0.072 U	0.072 U
	2-Butanone	4,400	**1.01**	**4.57**	**3.04**	**13.7**	**14.3**	**20.7**	**20.7**	**10.4**	**9.82**	**11.3**	**9.59**	**11.4**	**14**	**22.5**	**8.85**	**11.0**	0.589 U	0.589 U	**0.784**	**1.35**
	cis-1,2-Dichloroethene	31	**4.27**	**15.2**	**0.103**	**0.452**	**0.464**	0.079 U	0.079 U	0.079 U	0.079 U	0.079 U	0.079 U	0.079 U	**0.428**	0.079 U	0.079 U	0.079 U	**0.087**	0.079 U	**0.551**	**0.539**
	Chloroform	3	0.098 U	**0.161**	**2.34**	**3.56**	**3.59**	**3.24**	**3.25**	**2.84**	**2.75**	**6.89**	**4.13**	**5.32**	**3.18**	**3.02**	**2.09**	**4.49**	0.098 U	0.098 U	0.098 U	0.098 U
	1,2-Dichloroethane	0.44	0.081 U	**0.109**	0.081 U	**0.093**	**0.097**	**0.125**	**0.130**	0.081 U	0.081 U	0.081 U	0.081 U	0.081 U	**0.097**	**0.130**	0.081 U	0.081 U	0.081 U	0.081 U	0.081 U	0.081 U
	1,1,1-Trichloroethane	4,600	1.09 U	1.09 U	**1.31**	**2.28**	**2.35**	**2.38**	**2.40**	**1.35**	**1.23**	**1.38**	**1.16**	**2.11**	**2.51**	**3.07**	**1.13**	**2.35**	1.09 U	1.09 U	**1.85**	**1.78**
	Benzene	11	**0.865**	**5.50**	**1.52**	**0.879**	**1.10**	**0.744**	**0.767**	**2.40**	**2.20**	**3.74**	**3.32**	**11.3**	**0.939**	**0.866**	**1.87**	**3.64**	**0.424**	**0.447**	**0.495**	**0.498**
	Carbon tetrachloride	1.9	**0.578**	**0.509**	**0.66**	**0.447**	**0.503**	**0.453**	**0.447**	**0.516**	**0.491**	**0.371**	**0.447**	**0.440**	**0.459**	**0.459**	**0.409**	**0.428**	**0.484**	**0.390**	**0.396**	**0.377**
	1,2-Dichloropropane	0.6	0.092 U	0.092 U	0.092 U	0.092 U	0.092 U	0.092 U	0.092 U	0.092 U	0.092 U	0.092 U	0.092 U	0.092 U	0.092 U	0.092 U	0.092 U	0.092 U	0.092 U	0.092 U	0.092 U	0.092 U
	Bromodichloromethane	0.65	0.134 U	0.134 U	**0.355**	**0.663**	**0.663**	**0.663**	**0.663**	**0.315**	**0.295**	**1.15**	**0.925**	**1.05**	**0.643**	**0.663**	**0.221**	**1.07**	0.134 U	0.134 U	0.134 U	0.134 U
	Trichloroethene	1.8	**2.20**	**10.9**	**0.204**	0.107 U	0.107 U	0.107 U	0.107 U	0.107 U	0.107 U	0.107 U	0.107 U	0.107 U	0.107 U	0.107 U	0.107 U	0.107 U	0.107 U	0.107 U	**17.5**	**17.2**
	1,4-Dioxane	2.8	0.360 U	0.360 U	0.36 U	0.360 U	0.360 U	0.360 U	0.360 U	0.360 U	0.360 U	0.360 U	0.360 U	0.360 U	0.360 U	0.360 U	0.360 U	0.360 U	0.360 U	0.360 U	0.360 U	0.360 U
	cis-1,3-Dichloropropene	2.9	0.091 U	0.091 U	0.091 U	0.091 U	0.091 U	0.091 U	0.091 U	0.091 U	0.091 U	0.091 U	0.091 U	0.091 U	0.091 U	0.091 U	0.091 U	0.091 U	0.091 U	0.091 U	0.091 U	0.091 U
	4-Methyl-2-pentanone	2700	0.819 U	0.819 U	**0.876**	0.820 U	0.820 U	0.820 U	0.820 U	0.820 U	0.820 U	2.05 U	2.05 U	2.05 U	0.820 U	0.820 U	0.820 U	2.05 U	0.819 U	0.819 U	0.819 U	0.819 U
	trans-1,3-Dichloropropene	2.9	0.091 U	0.091 U	0.091 U	0.091 U	0.091 U	0.091 U	0.091 U	0.091 U	0.091 U	0.091 U	0.091 U	0.091 U	0.091 U	0.091 U	0.091 U	0.091 U	0.091 U	0.091 U	0.091 U	0.091 U
	1,1,2-Trichloroethane	0.72	0.109 U	0.109 U	0.109 U	0.109 U	0.109 U	0.109 U	0.109 U	0.109 U	0.109 U	0.109 U	0.109 U	0.109 U	0.109 U	0.109 U	0.109 U	0.109 U	0.109 U	0.109 U	0.109 U	0.109 U
	Toluene	4,400	**1.97**	**42.0**	**9.47**	**24.7**	**26**	**25.4**	**25.6**	**23.8**	**23.4**	**33.4**	**26.7**	**33.1**	**26.2**	**25.5**	**21.9**	**33.5**	0.753 U	**4.18**	**1.30**	**1.44**
	Dibromochloromethane	0.48	0.096 U	0.096 U	0.170 U	0.170 U	0.170 U	0.17 U	0.17 U	0.170 U	0.170 U	0.170 U	0.170 U	0.170 U	0.170 U	0.17 U	0.170 U	0.170 U	0.096 U	0.096 U	0.170 U	0.170 U
	1,2-Dibromoethane	0.038	0.154 U	0.154 U	0.154 U	0.154 U	0.154 U	0.154 U	0.154 U	0.154 U	0.154 U	0.154 U	0.154 U	0.154 U	0.154 U	0.154 U	0.154 U	0.154 U	0.154 U	0.154 U	0.154 U	0.154 U
	Tetrachloroethene	4.1	0.136 U	0.136 U	0.136 U	**0.176**	**0.203**	**0.210**	**0.210**	0.136 U	0.136 U	**0.210**	0.136 U	**0.190**	**0.183**	**0.237**	0.136 U	**0.251**	0.136 U	0.136 U	**0.142**	**0.142**
	Chlorobenzene	18	0.920 U	0.920 U	0.920 U	0.092 U	0.092 U	0.092 U	0.092 U	0.092 U	0.092 U	0.092 U	0.092 U	0.092 U	0.092 U	0.092 U	0.092 U	0.092 U	0.920 U	0.920 U	0.092 U	0.092 U
	Ethylbenzene	880	0.868 U	**5.99**	**1.43**	**2.33**	**2.47**	**1.93**	**1.97**	**2.32**	**2.25**	**2.36**	**1.68**	**2.23**	**2.68**	**2.21**	**2.21**	**2.49**	0.868 U	**3.06**	**0.160**	**0.212**
	p/m-Xylene	88	1.74 U	**24.4**	**6.13**	**6.65**	**7.04**	**5.73**	**5.86**	**6.69**	**6.52**	**8.47**	**5.91**	**7.91**	**7.47**	**6.60**	**6.52**	**8.77**	1.74 U	**9.61**	**0.408**	**0.616**
	Bromoform	10	2.06 U	2.06 U	2.06 U	0.207 U	0.207 U	0.207 U	0.207 U	0.207 U	0.207 U	0.207 U	0.207 U	0.207 U	0.207 U	0.207 U	0.207 U	0.207 U	2.06 U	2.06 U	0.206 U	0.206 U
	Styrene	20	0.851 U	0.851 U	0.851 U	**0.400**	**0.392**	**0.600**	**0.609**	**0.128**	**0.141**	**0.524**	**0.328**	**0.681**	**0.345**	**0.571**	**0.115**	**0.553**	0.851 U	0.851 U	0.085 U	0.085 U
	1,1,2,2-Tetrachloroethane	0.2	0.137 U	0.137 U	0.137 U	0.137 U	0.137 U	0.137 U	0.137 U	0.137 U	0.137 U	0.137 U	0.137 U	0.137 U	0.137 U	0.137 U	0.137 U	0.137 U	0.137 U	0.137 U	0.137 U	0.137 U
	o-Xylene	88	0.868 U	**7.49**	**1.90**	**2.39**	**2.52**	**2.16**	**2.20**	**2.35**	**2.31**	**2.71**	**1.91**	**2.57**	**2.62**	**2.43**	**2.33**	**2.77**	0.868 U	**2.03**	**0.148**	**0.226**
	1,3-Dichlorobenzene	180	1.20 U	1.20 U	1.20 U	0.120 U	0.120 U	0.120 U	0.120 U	0.120 U	0.120 U	0.120 U	0.120 U	0.120 U	0.120 U	0.120 U	0.120 U	0.120 U	1.20 U	1.20 U	0.120 U	0.120 U
	1,4-Dichlorobenzene	1.7	0.120 U	0.120 U	0.120 U	0.120 U	0.120 U	0.120 U	0.120 U	0.120 U	0.120 U	0.120 U	0.120 U	**0.222**	0.120 U	0.120 U	0.120 U	**0.138**	0.120 U	0.120 U	0.120 U	0.120 U
	1,2-Dichlorobenzene	180	1.20 U	1.20 U	1.20 U	0.120 U	0.120 U	**0.156**	**0.156**	0.120 U	0.120 U	0.120 U	0.120 U	0.120 U	**0.120**	**0.204**	0.120 U	0.120 U	1.20 U	1.20 U	0.120 U	0.120 U
	1,2,4-Trichlorobenzene	180	1.48 U	1.48 U	1.48 U	0.371 U	0.371 U	0.371 U	0.371 U	0.371 U	0.371 U	0.371 U	0.371 U	0.371 U	0.371 U	0.371 U	0.371 U	0.371 U	1.48 U	1.48 U	0.371 U	0.371 U

Table 3
Summary of Analytical Results for Indoor Air Samples
2010 through 2015
New Bedford High School
New Bedford, Massachusetts

Analysis	Analyte	Sample Locatoin:	Mechanical Room B-114																Classroom B-116	Senior Honor Lounge Room B-109		
		Sample ID:	TRC-IA-1	TRC-IA-1	IA-2	TRC IA 16		TRC IA 16		TRC IA 16		TRC-IA-16	TRC-IA-16	TRC-IA-16	TRC IA 17	TRC IA 17	TRC IA 17	TRC IA 17	TRC-IA-2	TRC-IA-3	B109	
		Sample Date:	1/31/2010	4/20/2010	8/24/2010	8/22/2014	8/22/2014	9/2/2014	9/2/2014	1/3/2015	1/3/2015	6/22/2015	7/10/2015	7/25/2015	8/22/2014	9/2/2014	1/3/2015	7/25/2015	1/31/2010	1/31/2010	4/8/2011	4/8/2011
		IATV					Field Dup		Field Dup		Field Dup											Field Dup
	Naphthalene	2.7	0.262 U	**0.681**	0.262 U	**0.341**	**0.288**	**0.357**	**0.367**	0.262 U	0.262 U	**1.05**	**0.692**	**0.876**	**0.288**	**0.435**	0.262 U	**0.551**	0.262 U	**0.665**	0.262 U	0.262 U
	Hexachlorobutadiene	4.6	0.192 U	0.192 U	0.533 U	0.533 U	0.533 U	0.533 U	0.533 U	0.533 U	0.533 U	0.533 U	0.533 U	0.533 U	0.533 U	0.533 U	0.533 U	0.533 U	0.192 U	0.192 U	0.533 U	0.533 U
	n-Propylbenzene	44(a)	0.982 U	**1.49**	0.982 U	NA	NA	NA	NA	NA	NA	NA	NA	NA	NA	NA	NA	NA	0.982 U	0.982 U	0.982 U	0.982 U
	n-Butylbenzene	44(a)	1.10 U	1.10 U	1.10 U	NA	NA	NA	NA	NA	NA	NA	NA	NA	NA	NA	NA	NA	1.10 U	1.10 U	2.74 U	2.74 U
	4-Chlorotoluene	N/A	1.03 U	1.03 U	1.03 U	NA	NA	NA	NA	NA	NA	NA	NA	NA	NA	NA	NA	NA	1.03 U	1.03 U	1.03 U	1.03 U
	Diisopropyl ether	N/A	0.835 U	0.835 U	0.835 U	NA	NA	NA	NA	NA	NA	NA	NA	NA	NA	NA	NA	NA	0.835 U	0.835 U	0.835 U	0.835 U
	1,3,5-Trimethybenzene	44(a)	0.982 U	**2.54**	0.982 U	NA	NA	NA	NA	NA	NA	NA	NA	NA	NA	NA	NA	NA	0.982 U	0.982 U	0.098 U	0.098 U
	Bromobenzene	N/A	1.28 U	1.28 U	1.28 U	NA	NA	NA	NA	NA	NA	NA	NA	NA	NA	NA	NA	NA	1.28 U	1.28 U	1.28 U	1.28 U
	Tetrahydrofuran	N/A	0.589 U	0.589 U	0.589 U	NA	NA	NA	NA	NA	NA	NA	NA	NA	NA	NA	NA	NA	0.589 U	0.589 U	0.589 U	0.589 U
	Xylenes (total)	88	1.74 U	**31.89**	**8.03**	NA	NA	NA	NA	NA	NA	NA	NA	NA	NA	NA	NA	NA	1.74 U	**11.64**	**0.556**	**0.842**
	sec-Butylbenzene	44(a)	1.10 U	1.10 U	1.10 U	NA	NA	NA	NA	NA	NA	NA	NA	NA	NA	NA	NA	NA	1.10 U	1.10 U	2.74 U	2.74 U
	1,3-Dichloropropane	N/A	0.923 U	0.923 U	0.923 U	NA	NA	NA	NA	NA	NA	NA	NA	NA	NA	NA	NA	NA	0.923 U	0.923 U	0.923 U	0.923 U
	1,1-Dichloropropene	N/A	0.907 U	0.907 U	0.907 U	NA	NA	NA	NA	NA	NA	NA	NA	NA	NA	NA	NA	NA	0.907 U	0.907 U	0.907 U	0.907 U
	2-Hexanone	N/A	0.819 U	0.819 U	0.819 U	NA	NA	NA	NA	NA	NA	NA	NA	NA	NA	NA	NA	NA	0.819 U	0.819 U	0.819 U	0.819 U
	2,2-Dichloropropane	N/A	0.923 U	0.923 U	0.923 U	NA	NA	NA	NA	NA	NA	NA	NA	NA	NA	NA	NA	NA	0.923 U	0.923 U	0.923 U	0.923 U
	Ethyl ether	44(a)	0.606 U	0.606 U	0.606 U	NA	NA	NA	NA	NA	NA	NA	NA	NA	NA	NA	NA	NA	0.606 U	0.606 U	0.606 U	0.606 U
	1,1,1,2-Tetrachloroethane	N/A	1.37 U	1.37 U	1.37 U	NA	NA	NA	NA	NA	NA	NA	NA	NA	NA	NA	NA	NA	1.37 U	1.37 U	0.137 U	0.137 U
	tert-Butyl Ethyl Ether	N/A	0.835 U	0.835 U	0.835 U	NA	NA	NA	NA	NA	NA	NA	NA	NA	NA	NA	NA	NA	0.835 U	0.835 U	0.835 U	0.835 U
	Chloromethane	N/A	**1.11**	**1.04**	**1.10**	NA	NA	NA	NA	NA	NA	NA	NA	NA	NA	NA	NA	NA	**1.03**	**0.92**	1.03 U	1.03 U
	Dibromomethane	N/A	1.42 U	1.42 U	1.42 U	NA	NA	NA	NA	NA	NA	NA	NA	NA	NA	NA	NA	NA	1.42 U	1.42 U	1.42 U	1.42 U
	Chloroethane	N/A	0.527 U	0.527 U	0.527 U	NA	NA	NA	NA	NA	NA	NA	NA	NA	NA	NA	NA	NA	0.527 U	0.527 U	0.053 U	0.053 U
	Carbon disulfide	N/A	0.622 U	0.622 U	0.622 U	NA	NA	NA	NA	NA	NA	NA	NA	NA	NA	NA	NA	NA	0.622 U	0.622 U	0.622 U	0.622 U
	Trichlorofluoromethane	N/A	1.12 U	**1.25**	**1.82**	NA	NA	NA	NA	NA	NA	NA	NA	NA	NA	NA	NA	NA	1.12 U	1.12 U	**1.18**	**1.10**
	Dichlorodifluoromethane	N/A	**2.00**	**2.27**	**3.11**	NA	NA	NA	NA	NA	NA	NA	NA	NA	NA	NA	NA	NA	**2.02**	**2.08**	**2.34**	**2.24**
	1,2,3-Trichlorobenzene	N/A	1.48 U	1.48 U	1.48 U	NA	NA	NA	NA	NA	NA	NA	NA	NA	NA	NA	NA	NA	1.48 U	1.48 U	0.371 U	0.371 U
	2-Chlorotoluene	N/A	1.03 U	1.03 U	1.03 U	NA	NA	NA	NA	NA	NA	NA	NA	NA	NA	NA	NA	NA	1.03 U	1.03 U	1.03 U	1.03 U
	1,2,4-Trimethylbenzene	44(a)	0.982 U	**9.04**	**2.36**	NA	NA	NA	NA	NA	NA	NA	NA	NA	NA	NA	NA	NA	0.982 U	0.982 U	0.098 U	**0.157**
	1,2-Dibromo-3-chloropropane	N/A	1.93 U	1.93 U	1.93 U	NA	NA	NA	NA	NA	NA	NA	NA	NA	NA	NA	NA	NA	1.93 U	1.93 U	1.93 U	1.93 U
	1,2,3-Trichloropropane	N/A	1.20 U	1.20 U	1.20 U	NA	NA	NA	NA	NA	NA	NA	NA	NA	NA	NA	NA	NA	1.20 U	1.20 U	1.20 U	1.20 U
	tert-Butylbenzene	44(a)	1.10 U	1.10 U	1.10 U	NA	NA	NA	NA	NA	NA	NA	NA	NA	NA	NA	NA	NA	1.10 U	1.10 U	1.10 U	1.10 U
	Isopropylbenzene	44(a)	0.982 U	0.982 U	0.982 U	NA	NA	NA	NA	NA	NA	NA	NA	NA	NA	NA	NA	NA	0.982 U	0.982 U	2.46 U	2.46 U
	tert-Amyl Methyl Ether	N/A	0.835 U	0.835 U	0.835 U	NA	NA	NA	NA	NA	NA	NA	NA	NA	NA	NA	NA	NA	0.835 U	0.835 U	0.835 U	0.835 U
	p-Isopropyltoluene	44(a)	1.10 U	1.10 U	1.10 U	NA	NA	NA	NA	NA	NA	NA	NA	NA	NA	NA	NA	NA	1.10 U	1.10 U	2.74 U	2.74 U

Notes:
ug/m3 - micrograms per cubic meter.
NA - Sample not analyzed for the listed analyte.
N/A - No MassDEP criteria exist for this analyte.
U - Compound was not detected at specified quantitation limit.
Values in Bold indicate the compound was detected.
TO - Toxic organics.
IATV - MassDEP, Indoor Air Threshold Values (IATV), Commercial/ Industrial, Vapor Intrusion Guidance- Interim Final, December 2011 with updated screening values from February 22 and March 7, 2013.
(a) - IATV criteria for C9-C10 aromatics used.

Table 3
Summary of Analytical Results for Indoor Air Samples
2010 through 2015
New Bedford High School
New Bedford, Massachusetts

Analysis	Analyte	Sample Locatoin:	Cafeteria Storage Room B-155					Classroom A-112-3				Classroom A-115-4	Classroom A-105-4	Classroom A-115-3	Classroom A-105-3	Classroom A-115-2	Classroom A-105-2	Classroom A-116-1	Classroom A-112-2	Classroom A-110-1	Lecture Room D-120		Storage Room	Can Wash
		Sample ID:	TRC-IA-4	TRC IA 4	TRC IA 4	TRC IA 4	TRC IA 4	TRC-IA-5	TRC-IA-5	IA-1		TRC-IA-6	TRC-IA-7	TRC-IA-8	TRC-IA-9	TRC-IA-10	TRC-IA-11	TRC-IA-12	TRC-IA-13	TRC-IA-14	TRC-IA-15	IA-3	B106	B147
		Sample Date:	1/31/2010	8/22/2014	9/2/2014	1/3/2015	7/25/2015	1/31/2010	4/20/2010	8/24/2010	8/24/2010 Field Dup	4/20/2010	4/20/2010	4/20/2010	4/20/2010	4/20/2010	4/20/2010	4/20/2010	4/20/2010	4/20/2010	4/20/2010	8/24/2010	4/8/2011	4/8/2011
		IATV																						
TO-15																								
(ug/m3)	Vinyl chloride	1.3	0.051 U	0.051 U	0.051 U	0.051 U	0.051 U	**0.531**	0.051 U	0.051 U	0.051 U	0.051 U	0.051 U	0.051 U	0.051 U	0.051 U	0.051 U	0.051 U	0.051 U	0.051 U	0.051 U	0.051 U	0.051 U	0.051 U
	Bromomethane	4.4	0.776 U	0.078 U	0.078 U	0.078 U	0.078 U	0.776 U	0.776 U	0.776 U	0.776 U	0.776 U	0.776 U	0.776 U	0.776 U	0.776 U	0.776 U	0.776 U	0.776 U	0.776 U	0.776 U	0.776 U	0.078 U	0.078 U
	Acetone	710	**3.68**	**16.6**	**8.67**	**15.5**	2.38 U	2.37 U	**4.83**	**7.52**	**8.21**	**6.81**	**5.18**	**7.56**	**5.78**	**4.64**	**7.75**	**5.30**	**5.02**	**4.62**	**8.21**	**9.90**	**59.1**	**6.11**
	1,1-Dichloroethene	180	0.792 U	0.079 U	0.079 U	0.079 U	0.079 U	0.792 U	0.792 U	0.792 U	0.792 U	0.792 U	0.792 U	0.792 U	0.792 U	0.792 U	0.792 U	0.792 U	0.792 U	0.792 U	0.792 U	0.792 U	0.079 U	0.079 U
	Methylene chloride	530	1.74 U	4.86 U	4.86 U	4.86 U	**3.45**	1.74 U	1.74 U	4.86 U	4.86 U	1.74 U	1.74 U	1.74 U	**2.87**	1.74 U	1.74 U	1.74 U	1.74 U	1.74 U	1.74 U	4.86 U	4.86 U	4.86 U
	trans-1,2-Dichloroethene	62	0.079 U	0.079 U	0.079 U	0.079 U	0.079 U	**1.72**	0.079 U	0.079 U	0.079 U	0.079 U	0.079 U	0.079 U	0.079 U	0.079 U	0.079 U	0.079 U	0.079 U	0.079 U	0.079 U	0.079 U	0.079 U	0.079 U
	1,1-Dichloroethane	440	0.809 U	0.081 U	0.081 U	0.081 U	0.081 U	0.809 U	0.809 U	0.809 U	0.809 U	0.809 U	0.809 U	0.809 U	0.809 U	0.809 U	0.809 U	0.809 U	0.809 U	0.809 U	0.809 U	0.809 U	0.081 U	0.081 U
	Methyl tert butyl ether	2700	0.720 U	0.072 U	**0.094**	0.072 U	0.721 U	0.720 U	0.720 U	0.720 U	0.720 U	0.720 U	0.720 U	0.720 U	0.720 U	0.720 U	0.720 U	0.720 U	0.720 U	0.720 U	**4.74**	0.720 U	0.072 U	0.072 U
	2-Butanone	4,400	0.589 U	**1.11**	**1.99**	**1.77**	**1.80**	**1.89**	0.589 U	0.589 U	**0.628**	0.589 U	0.589 U	**0.922**	0.589 U	0.589 U	**0.746**	**0.648**	0.589 U	0.589 U	**2.44**	**1.79**	**0.996**	**1.16**
	cis-1,2-Dichloroethene	31	0.079 U	0.079 U	0.079 U	0.079 U	0.079 U	**3.58**	0.079 U	0.079 U	0.079 U	**0.103**	**0.246**	0.079 U	**0.119**	0.079 U	0.079 U	0.079 U	0.079 U	0.079 U	0.079 U	0.079 U	**0.226**	**0.254**
	Chloroform	3	0.098 U	**0.259**	**0.200**	**0.469**	**0.576**	**0.283**	0.098 U	**1.31**	**0.146**	0.098 U	0.098 U	0.098 U	0.098 U	0.098 U	0.098 U	0.098 U	0.098 U	0.098 U	**0.590**	**0.107**	**0.098**	**0.107**
	1,2-Dichloroethane	0.44	0.081 U	0.081 U	0.081 U	0.081 U	**0.109**	0.081 U	0.081 U	0.081 U	0.081 U	0.081 U	0.081 U	0.081 U	0.081 U	0.081 U	0.081 U	0.081 U	0.081 U	0.081 U	0.081 U	0.081 U	0.081 U	0.081 U
	1,1,1-Trichloroethane	4,600	1.09 U	**0.191**	**0.186**	**0.393**	**0.218**	1.09 U	1.09 U	1.09 U	1.09 U	1.09 U	1.09 U	1.09 U	1.09 U	1.09 U	1.09 U	1.09 U	1.09 U	1.09 U	**7.14**	1.09 U	**1.10**	**1.07**
	Benzene	11	**0.479**	0.319 U	0.319 U	**1.34**	**0.588**	**2.55**	**0.345**	0.319 U	0.319 U	**0.405**	0.319 U	0.319 U	**0.354**	0.319 U	0.319 U	**0.358**	**0.322**	0.319 U	**4.48**	**0.348**	**0.447**	**0.492**
	Carbon tetrachloride	1.9	**0.490**	**0.447**	**0.465**	**0.421**	**0.478**	**0.559**	**0.566**	**0.654**	**0.666**	**0.629**	**0.478**	**0.484**	**0.541**	**0.490**	**0.509**	**0.610**	**0.578**	**0.484**	**0.478**	**0.679**	**0.390**	**0.383**
	1,2-Dichloropropane	0.6	0.092 U	0.092 U	0.092 U	0.092 U	0.092 U	0.092 U	0.092 U	0.092 U	0.092 U	0.092 U	0.092 U	0.092 U	0.092 U	0.092 U	0.092 U	0.092 U	0.092 U	0.092 U	0.092 U	0.092 U	0.092 U	0.092 U
	Bromodichloromethane	0.65	0.134 U	0.134 U	0.134 U	0.134 U	0.134 U	0.134 U	0.134 U	0.134 U	0.134 U	0.134 U	0.134 U	0.134 U	0.134 U	0.134 U	0.134 U	0.134 U	0.134 U	0.134 U	0.134 U	0.134 U	0.134 U	0.134 U
	Trichloroethene	1.8	0.107 U	0.107 U	0.107 U	0.107 U	0.107 U	**1.12**	0.107 U	0.107 U	0.107 U	**0.172**	**0.462**	0.107 U	0.107 U	0.107 U	0.107 U	0.107 U	0.107 U	0.107 U	**0.107**	0.107 U	**7.25**	**7.42**
	1,4-Dioxane	2.8	0.360 U	0.360 U	0.360 U	0.360 U	0.360 U	0.360 U	0.360 U	0.360 U	0.360 U	0.360 U	0.360 U	0.360 U	0.360 U	0.360 U	0.360 U	0.360 U	0.360 U	0.360 U	0.360 U	0.360 U	0.360 U	0.360 U
	cis-1,3-Dichloropropene	2.9	0.091 U	0.091 U	0.091 U	0.091 U	0.091 U	0.091 U	0.091 U	0.091 U	0.091 U	0.091 U	0.091 U	0.091 U	0.091 U	0.091 U	0.091 U	0.091 U	0.091 U	0.091 U	0.091 U	0.091 U	0.091 U	0.091 U
	4-Methyl-2-pentanone	2700	0.819 U	0.820 U	0.820 U	0.820 U	2.05 U	**1.21**	0.819 U	0.819 U	0.819 U	0.819 U	0.819 U	0.819 U	0.819 U	0.819 U	0.819 U	0.819 U	0.819 U	0.819 U	0.819 U	0.819 U	0.819 U	0.819 U
	trans-1,3-Dichloropropene	2.9	0.091 U	0.091 U	0.091 U	0.091 U	0.091 U	0.091 U	0.091 U	0.091 U	0.091 U	0.091 U	0.091 U	0.091 U	0.091 U	0.091 U	0.091 U	0.091 U	0.091 U	0.091 U	0.091 U	0.091 U	0.091 U	0.091 U
	1,1,2-Trichloroethane	0.72	0.109 U	0.109 U	0.109 U	0.109 U	0.109 U	0.109 U	0.109 U	0.109 U	0.109 U	0.109 U	0.109 U	0.109 U	0.109 U	0.109 U	0.109 U	0.109 U	0.109 U	0.109 U	0.109 U	0.109 U	0.109 U	0.109 U
	Toluene	4,400	0.753 U	**1.00**	**1.35**	**8.37**	**3.88**	**13.1**	0.753 U	**0.922**	**0.979**	**0.874**	**1.41**	0.753 U	**0.915**	0.753 U	**1.31**	0.753 U	0.753 U	0.753 U	**36.9**	**3.54**	**1.30**	**1.37**
	Dibromochloromethane	0.48	0.096 U	0.170 U	0.17 U	0.170 U	0.170 U	0.096 U	0.096 U	0.170 U	0.170 U	0.096 U	0.096 U	0.096 U	0.096 U	0.096 U	0.096 U	0.096 U	0.096 U	0.096 U	0.096 U	0.170 U	0.170 U	0.170 U
	1,2-Dibromoethane	0.038	0.154 U	0.154 U	0.154 U	0.154 U	0.154 U	0.154 U	0.154 U	0.154 U	0.154 U	0.154 U	0.154 U	0.154 U	0.154 U	0.154 U	0.154 U	0.154 U	0.154 U	0.154 U	0.154 U	0.154 U	0.154 U	0.154 U
	Tetrachloroethene	4.1	0.136 U	0.136 U	0.136 U	0.136 U	**0.197**	0.136 U	0.136 U	0.136 U	0.136 U	0.136 U	0.136 U	0.136 U	**0.196**	0.136 U	0.136 U	0.136 U	0.136 U	0.136 U	**1.76**	**0.136**	0.136 U	0.136 U
	Chlorobenzene	18	0.920 U	0.092 U	0.092 U	0.092 U	0.092 U	0.920 U	0.920 U	0.920 U	0.920 U	0.920 U	0.920 U	0.920 U	0.920 U	0.920 U	0.920 U	0.920 U	0.920 U	0.920 U	0.920 U	0.920 U	0.092 U	0.092 U
	Ethylbenzene	880	0.868 U	**0.204**	**0.291**	**1.01**	**0.573**	**1.80**	0.868 U	0.868 U	0.868 U	0.868 U	0.868 U	0.868 U	0.868 U	0.868 U	0.868 U	0.868 U	0.868 U	0.868 U	**6.00**	0.868 U	**0.260**	**0.252**
	p/m-Xylene	88	1.74 U	**0.539**	**0.799**	**3.22**	**1.22**	**7.55**	1.74 U	1.74 U	1.74 U	1.74 U	1.74 U	1.74 U	1.74 U	1.74 U	1.74 U	1.74 U	1.74 U	1.74 U	**18.8**	**2.41**	**0.720**	**0.781**
	Bromoform	10	2.06 U	0.207 U	0.207 U	0.207 U	0.207 U	2.06 U	2.06 U	2.06 U	2.06 U	2.06 U	2.06 U	2.06 U	2.06 U	2.06 U	2.06 U	2.06 U	2.06 U	2.06 U	2.06 U	2.06 U	0.206 U	0.206 U
	Styrene	20	0.851 U	**0.392**	**0.643**	**0.251**	**5.28**	0.851 U	0.851 U	0.851 U	0.851 U	0.851 U	0.851 U	0.851 U	0.851 U	0.851 U	0.851 U	0.851 U	0.851 U	0.851 U	0.851 U	0.851 U	**0.294**	0.085 U
	1,1,2,2-Tetrachloroethane	0.2	0.137 U	0.137 U	0.137 U	0.137 U	0.137 U	0.137 U	0.137 U	0.137 U	0.137 U	0.137 U	0.137 U	0.137 U	0.137 U	0.137 U	0.137 U	0.137 U	0.137 U	0.137 U	0.137 U	0.137 U	0.137 U	0.137 U
	o-Xylene	88	0.868 U	**0.213**	**0.369**	**1.14**	**0.478**	**2.44**	0.868 U	0.868 U	0.868 U	0.868 U	0.868 U	0.868 U	0.868 U	0.868 U	0.868 U	0.868 U	0.868 U	0.868 U	**6.69**	0.868 U	**0.317**	**0.321**
	1,3-Dichlorobenzene	180	1.20 U	0.120 U	0.120 U	0.120 U	0.120 U	1.20 U	1.20 U	1.20 U	1.20 U	1.20 U	1.20 U	1.20 U	1.20 U	1.20 U	1.20 U	1.20 U	1.20 U	1.20 U	1.20 U	1.20 U	0.120 U	0.120 U
	1,4-Dichlorobenzene	1.7	0.120 U	0.120 U	0.120 U	0.120 U	**0.162**	0.120 U	0.120 U	0.120 U	0.120 U	0.120 U	0.120 U	0.120 U	0.120 U	0.120 U	0.120 U	0.120 U	0.120 U	0.120 U	0.120 U	0.120 U	0.120 U	0.120 U
	1,2-Dichlorobenzene	180	1.20 U	0.120 U	0.120 U	0.120 U	0.120 U	1.20 U	1.20 U	1.20 U	1.20 U	1.20 U	1.20 U	1.20 U	1.20 U	1.20 U	1.20 U	1.20 U	1.20 U	1.20 U	1.20 U	1.20 U	0.120 U	0.120 U
	1,2,4-Trichlorobenzene	180	1.48 U	0.371 U	0.371 U	0.371 U	0.371 U	1.48 U	1.48 U	1.48 U	1.48 U	1.48 U	1.48 U	1.48 U	1.48 U	1.48 U	1.48 U	1.48 U	1.48 U	1.48 U	1.48 U	1.48 U	0.371 U	0.371 U

Table 3
Summary of Analytical Results for Indoor Air Samples
2010 through 2015
New Bedford High School
New Bedford, Massachusetts

Analysis	Analyte	Sample Locatoin:	Cafeteria Storage Room B-155					Classroom A-112-3				Classroom A-115-4	Classroom A-105-4	Classroom A-115-3	Classroom A-105-3	Classroom A-115-2	Classroom A-105-2	Classroom A-116-1	Classroom A-112-2	Classroom A-110-1	Lecture Room D-120		Storage Room	Can Wash
		Sample ID:	TRC-IA-4	TRC IA 4	TRC IA 4	TRC IA 4	TRC IA 4	TRC-IA-5	TRC-IA-5	IA-1		TRC-IA-6	TRC-IA-7	TRC-IA-8	TRC-IA-9	TRC-IA-10	TRC-IA-11	TRC-IA-12	TRC-IA-13	TRC-IA-14	TRC-IA-15	IA-3	B106	B147
		Sample Date:	1/31/2010	8/22/2014	9/2/2014	1/3/2015	7/25/2015	1/31/2010	4/20/2010	8/24/2010	8/24/2010 Field Dup	4/20/2010	4/20/2010	4/20/2010	4/20/2010	4/20/2010	4/20/2010	4/20/2010	4/20/2010	4/20/2010	4/20/2010	8/24/2010	4/8/2011	4/8/2011
		IATV																						
	Naphthalene	2.7	0.262 U	0.262 U	0.262 U	0.262 U	**0.288**	**0.325**	0.262 U	0.262 U	0.262 U	0.262 U	0.262 U	0.262 U	0.262 U	0.262 U	0.262 U	0.262 U	0.262 U	0.262 U	**0.644**	0.262 U	0.262 U	0.262 U
	Hexachlorobutadiene	4.6	0.192 U	0.533 U	0.533 U	0.533 U	0.533 U	0.192 U	0.192 U	0.533 U	0.533 U	0.192 U	0.192 U	0.192 U	0.192 U	0.192 U	0.192 U	0.192 U	0.192 U	0.192 U	0.192 U	0.533 U	0.533 U	0.533 U
	n-Propylbenzene	44(a)	0.982 U	NA	NA	NA	NA	0.982 U	0.982 U	0.982 U	0.982 U	0.982 U	0.982 U	0.982 U	0.982 U	0.982 U	0.982 U	0.982 U	0.982 U	0.982 U	**1.48**	0.982 U	0.982 U	0.982 U
	n-Butylbenzene	44(a)	1.10 U	NA	NA	NA	NA	1.10 U	1.10 U	1.10 U	1.10 U	1.10 U	1.10 U	1.10 U	1.10 U	1.10 U	1.10 U	1.10 U	1.10 U	1.10 U	1.10 U	1.10 U	2.74 U	2.74 U
	4-Chlorotoluene	N/A	1.03 U	NA	NA	NA	NA	1.03 U	1.03 U	1.03 U	1.03 U	1.03 U	1.03 U	1.03 U	1.03 U	1.03 U	1.03 U	1.03 U	1.03 U	1.03 U	1.03 U	1.03 U	1.03 U	1.03 U
	Diisopropyl ether	N/A	0.835 U	NA	NA	NA	NA	0.835 U	0.835 U	0.835 U	0.835 U	0.835 U	0.835 U	0.835 U	0.835 U	0.835 U	0.835 U	0.835 U	0.835 U	0.835 U	0.835 U	0.835 U	0.835 U	0.835 U
	1,3,5-Trimethybenzene	44(a)	0.982 U	NA	NA	NA	NA	0.982 U	0.982 U	0.982 U	0.982 U	0.982 U	0.982 U	0.982 U	0.982 U	0.982 U	0.982 U	0.982 U	0.982 U	0.982 U	**2.11**	0.982 U	0.098 U	0.098 U
	Bromobenzene	N/A	1.28 U	NA	NA	NA	NA	1.28 U	1.28 U	1.28 U	1.28 U	1.28 U	1.28 U	1.28 U	1.28 U	1.28 U	1.28 U	1.28 U	1.28 U	1.28 U	1.28 U	1.28 U	1.28 U	1.28 U
	Tetrahydrofuran	N/A	0.589 U	NA	NA	NA	NA	0.589 U	0.589 U	0.589 U	0.589 U	0.589 U	0.589 U	0.589 U	0.589 U	0.589 U	0.589 U	0.589 U	0.589 U	0.589 U	0.589 U	0.589 U	0.589 U	0.589 U
	Xylenes (total)	88	1.74 U	NA	NA	NA	NA	**9.99**	1.74 U	1.74 U	1.74 U	1.74 U	1.74 U	1.74 U	1.74 U	1.74 U	1.74 U	1.74 U	1.74 U	1.74 U	**25.49**	**2.41**	**1.037**	**1.102**
	sec-Butylbenzene	44(a)	1.10 U	NA	NA	NA	NA	1.10 U	1.10 U	1.10 U	1.10 U	1.10 U	1.10 U	1.10 U	1.10 U	1.10 U	1.10 U	1.10 U	1.10 U	1.10 U	1.10 U	1.10 U	2.74 U	2.74 U
	1,3-Dichloropropane	N/A	0.923 U	NA	NA	NA	NA	0.923 U	0.923 U	0.923 U	0.923 U	0.923 U	0.923 U	0.923 U	0.923 U	0.923 U	0.923 U	0.923 U	0.923 U	0.923 U	0.923 U	0.923 U	0.923 U	0.923 U
	1,1-Dichloropropene	N/A	0.907 U	NA	NA	NA	NA	0.907 U	0.907 U	0.907 U	0.907 U	0.907 U	0.907 U	0.907 U	0.907 U	0.907 U	0.907 U	0.907 U	0.907 U	0.907 U	0.907 U	0.907 U	0.907 U	0.907 U
	2-Hexanone	N/A	0.819 U	NA	NA	NA	NA	0.819 U	0.819 U	0.819 U	0.819 U	0.819 U	0.819 U	0.819 U	0.819 U	0.819 U	0.819 U	0.819 U	0.819 U	0.819 U	0.819 U	0.819 U	0.819 U	0.819 U
	2,2-Dichloropropane	N/A	0.923 U	NA	NA	NA	NA	0.923 U	0.923 U	0.923 U	0.923 U	0.923 U	0.923 U	0.923 U	0.923 U	0.923 U	0.923 U	0.923 U	0.923 U	0.923 U	0.923 U	0.923 U	0.923 U	0.923 U
	Ethyl ether	44(a)	0.606 U	NA	NA	NA	NA	0.606 U	0.606 U	0.606 U	0.606 U	0.606 U	0.606 U	0.606 U	0.606 U	0.606 U	0.606 U	0.606 U	0.606 U	0.606 U	0.606 U	0.606 U	0.606 U	0.606 U
	1,1,1,2-Tetrachloroethane	N/A	1.37 U	NA	NA	NA	NA	1.37 U	1.37 U	1.37 U	1.37 U	1.37 U	1.37 U	1.37 U	1.37 U	1.37 U	1.37 U	1.37 U	1.37 U	1.37 U	1.37 U	1.37 U	0.137 U	0.137 U
	tert-Butyl Ethyl Ether	N/A	0.835 U	NA	NA	NA	NA	0.835 U	0.835 U	0.835 U	0.835 U	0.835 U	0.835 U	0.835 U	0.835 U	0.835 U	0.835 U	0.835 U	0.835 U	0.835 U	0.835 U	0.835 U	0.835 U	0.835 U
	Chloromethane	N/A	**1.16**	NA	NA	NA	NA	**1.29**	**1.29**	**1.04**	**1.09**	**1.54**	**1.11**	**1.09**	**1.08**	**1.19**	**1.07**	**1.33**	**1.42**	**1.01**	**1.12**	**1.23**	1.03 U	1.03 U
	Dibromomethane	N/A	1.42 U	NA	NA	NA	NA	1.42 U	1.42 U	1.42 U	1.42 U	1.42 U	1.42 U	1.42 U	1.42 U	1.42 U	1.42 U	1.42 U	1.42 U	1.42 U	1.42 U	1.42 U	1.42 U	1.42 U
	Chloroethane	N/A	0.527 U	NA	NA	NA	NA	0.527 U	0.527 U	0.527 U	0.527 U	0.527 U	0.527 U	0.527 U	0.527 U	0.527 U	0.527 U	0.527 U	0.527 U	0.527 U	0.527 U	0.527 U	0.053 U	0.053 U
	Carbon disulfide	N/A	0.622 U	NA	NA	NA	NA	0.622 U	0.622 U	0.622 U	0.622 U	0.622 U	0.622 U	0.622 U	0.622 U	0.622 U	0.622 U	0.622 U	0.622 U	0.622 U	0.622 U	0.622 U	0.622 U	0.622 U
	Trichlorofluoromethane	N/A	1.12 U	NA	NA	NA	NA	**4.92**	**1.37**	**1.5**	**1.6**	**1.57**	1.12 U	**1.25**	1.12 U	**1.20**	**1.18**	**1.48**	**1.36**	**1.21**	**1.58**	**2.03**	**1.16**	**1.14**
	Dichlorodifluoromethane	N/A	**2.13**	NA	NA	NA	NA	**3.36**	**2.55**	**2.52**	**2.92**	**3.09**	**2.16**	**2.31**	**1.95**	**2.21**	**2.20**	**2.85**	**2.56**	**2.23**	**2.28**	**3.06**	**2.33**	**2.21**
	1,2,3-Trichlorobenzene	N/A	1.48 U	NA	NA	NA	NA	1.48 U	1.48 U	1.48 U	1.48 U	1.48 U	1.48 U	1.48 U	1.48 U	1.48 U	1.48 U	1.48 U	1.48 U	1.48 U	1.48 U	1.48 U	0.371 U	0.371 U
	2-Chlorotoluene	N/A	1.03 U	NA	NA	NA	NA	1.03 U	1.03 U	1.03 U	1.03 U	1.03 U	1.03 U	1.03 U	1.03 U	1.03 U	1.03 U	1.03 U	1.03 U	1.03 U	1.03 U	1.03 U	1.03 U	1.03 U
	1,2,4-Trimethylbenzene	44(a)	0.982 U	NA	NA	NA	NA	**3.18**	0.982 U	0.982 U	0.982 U	0.982 U	0.982 U	0.982 U	0.982 U	0.982 U	0.982 U	0.982 U	0.982 U	0.982 U	**6.96**	0.982 U	**0.182**	**0.167**
	1,2-Dibromo-3-chloropropane	N/A	1.93 U	NA	NA	NA	NA	1.93 U	1.93 U	1.93 U	1.93 U	1.93 U	1.93 U	1.93 U	1.93 U	1.93 U	1.93 U	1.93 U	1.93 U	1.93 U	1.93 U	1.93 U	1.93 U	1.93 U
	1,2,3-Trichloropropane	N/A	1.20 U	NA	NA	NA	NA	1.20 U	1.20 U	1.20 U	1.20 U	1.20 U	1.20 U	1.20 U	1.20 U	1.20 U	1.20 U	1.20 U	1.20 U	1.20 U	1.20 U	1.20 U	1.20 U	1.20 U
	tert-Butylbenzene	44(a)	1.10 U	NA	NA	NA	NA	1.10 U	1.10 U	1.10 U	1.10 U	1.10 U	1.10 U	1.10 U	1.10 U	1.10 U	1.10 U	1.10 U	1.10 U	1.10 U	1.10 U	1.10 U	1.10 U	1.10 U
	Isopropylbenzene	44(a)	0.982 U	NA	NA	NA	NA	0.982 U	0.982 U	0.982 U	0.982 U	0.982 U	0.982 U	0.982 U	0.982 U	0.982 U	0.982 U	0.982 U	0.982 U	0.982 U	0.982 U	0.982 U	2.46 U	2.46 U
	tert-Amyl Methyl Ether	N/A	0.835 U	NA	NA	NA	NA	0.835 U	0.835 U	0.835 U	0.835 U	0.835 U	0.835 U	0.835 U	0.835 U	0.835 U	0.835 U	0.835 U	0.835 U	0.835 U	0.835 U	0.835 U	0.835 U	0.835 U
	p-Isopropyltoluene	44(a)	1.10 U	NA	NA	NA	NA	1.10 U	1.10 U	1.10 U	1.10 U	1.10 U	1.10 U	1.10 U	1.10 U	1.10 U	1.10 U	1.10 U	1.10 U	1.10 U	1.10 U	1.10 U	2.74 U	2.74 U

Notes:
ug/m3 - micrograms per cubic meter.
NA - Sample not analyzed for the listed analyte.
N/A - No MassDEP criteria exist for this analyte.
U - Compound was not detected at specified quantitation limit.
Values in Bold indicate the compound was detected.
TO - Toxic organics.
IATV - MassDEP, Indoor Air Threshold Values (IATV), Commercial/ Industrial, Vapor Intrusion Guidance- Interim Final, December 2011 with updated screening values from February 22 and March 7, 2013.
(a) - IATV criteria for C9-C10 aromatics used.

Table 4
Summary of Analytical Results for Soil Gas Samples
2010 through 2015
New Bedford High School
New Bedford, Massachusetts

Analysis	Analyte	Sample Location:	PVP-1		PVP-2		PVP-3		PVP-4		PVP-5		
		Location Room:	Classroom A-115-4		Classroom A-115-3		Classroom A-112-3		Classroom A-115-2		Classroom A-105-1		
		Sample ID:	TVP-1	PVP-1	TVP-3	PVP-2	TVP-4	PVP-3	TVP-6	PVP-4	TVP-9		PVP-5
		Sample Date:	2/15/2010	4/20/2010	2/15/2010	4/20/2010	2/15/2010	4/20/2010	2/15/2010	4/20/2010	2/15/2010	2/15/2010 Field Dup	4/20/2010
		Screening Values*											
TO-15 (ug/m3)	Vinyl chloride	13.5	5.11 U	0.511 U	1.28 U	0.511 U	0.511 U	0.511 U	0.511 U	0.511 U	0.511 U	0.511 U	0.511 U
	Bromomethane	30	7.76 U	0.776 U	1.94 U	0.776 U	0.776 U	0.776 U	0.776 U	0.776 U	0.776 U	0.776 U	0.776 U
	Acetone	4,550	**1,100**	**4.10**	**665**	**24.5**	**137**	**29.8**	**52.9**	**158**	**24.1**	**33.5**	**71.3**
	1,1-Dichloroethene	40	7.92 U	0.792 U	1.98 U	0.792 U	0.792 U	0.792 U	0.792 U	0.792 U	0.792 U	0.792 U	0.792 U
	Methylene chloride	550	17.4 U	1.74 U	4.34 U	1.74 U	1.74 U	1.74 U	1.74 U	1.74 U	1.74 U	1.74 U	1.74 U
	trans-1,2-Dichloroethene	40	7.92 U	0.792 U	1.98 U	0.792 U	0.792 U	0.792 U	0.792 U	0.792 U	0.792 U	0.792 U	0.792 U
	1,1-Dichloroethane	40	8.09 U	0.809 U	2.02 U	0.809 U	0.809 U	0.809 U	0.809 U	0.809 U	0.809 U	0.809 U	0.809 U
	Methyl tert butyl ether	1,950	7.20 U	0.720 U	1.80 U	0.720 U	0.720 U	0.720 U	0.720 U	0.720 U	0.720 U	0.720 U	0.720 U
	2-Butanone	600	**17.3**	0.589 U	**36.3**	**3.04**	**5.42**	**5.45**	**3.88**	**21.1**	**2.57**	**3.42**	**6.75**
	cis-1,2-Dichloroethene	40	7.92 U	0.792 U	1.98 U	0.792 U	0.792 U	0.792 U	0.792 U	0.792 U	0.792 U	0.792 U	0.792 U
	Chloroform	95	9.76 U	0.976 U	2.44 U	0.976 U	0.976 U	0.976 U	**2.28**	0.976 U	0.976 U	0.976 U	0.976 U
	1,2-Dichloroethane	4.5	8.09 U	0.809 U	2.02 U	0.809 U	0.809 U	0.809 U	0.809 U	0.809 U	0.809 U	0.809 U	0.809 U
	1,1,1-Trichloroethane	150	10.9 U	1.09 U	2.72 U	1.09 U	1.09 U	1.09 U	1.09 U	1.09 U	1.09 U	1.09 U	1.09 U
	Benzene	115	**84.7**	0.638 U	**33.6**	0.638 U	**3.93**	0.638 U	**0.964**	**6.36**	**1.74**	**1.95**	**3.71**
	Carbon tetrachloride	27	12.6 U	1.26 U	3.14 U	1.26 U	1.26 U	1.26 U	1.26 U	1.26 U	1.26 U	1.26 U	1.26 U
	1,2-Dichloropropane	6	9.24 U	0.924 U	2.31 U	0.924 U	0.924 U	0.924 U	0.924 U	0.924 U	0.924 U	0.924 U	0.924 U
	Bromodichloromethane	6.5	13.4 U	1.34 U	3.35 U	1.34 U	1.34 U	1.34 U	1.34 U	1.34 U	1.34 U	1.34 U	1.34 U
	Trichloroethene	20	**22.6**	**2.06**	**15.0**	1.07 U	1.07 U	1.07 U	1.07 U	**7.61**	1.07 U	1.07 U	**1.35**
	1,4-Dioxane	28.5	7.20 U	0.720 U	1.80 U	0.720 U	0.720 U	0.720 U	0.720 U	0.720 U	0.720 U	0.720 U	0.720 U
	cis-1,3-Dichloropropene	29	9.07 U	0.907 U	2.27 U	0.907 U	0.907 U	0.907 U	0.907 U	0.907 U	0.907 U	0.907 U	0.907 U
	4-Methyl-2-pentanone	110	8.19 U	0.819 U	**9.43**	0.819 U	**5.19**	0.819 U	**1.44**	**2.96**	0.819 U	0.819 U	0.819 U
	trans-1,3-Dichloropropene	29	9.07 U	0.907 U	2.27 U	0.907 U	0.907 U	0.907 U	0.907 U	0.907 U	0.907 U	0.907 U	0.907 U
	1,1,2-Trichloroethane	7.5	10.9 U	1.09 U	2.72 U	1.09 U	1.09 U	1.09 U	1.09 U	1.09 U	1.09 U	1.09 U	1.09 U
	Toluene	2,700	**21.6**	0.753 U	**21.3**	0.753 U	**2.97**	0.753 U	**0.764**	**4.95**	**3.12**	**3.92**	**2.49**
	Dibromochloromethane	4.85	17.0 U	1.70 U	4.26 U	1.70 U	1.70 U	1.70 U	1.70 U	1.70 U	1.70 U	1.70 U	1.70 U
	1,2-Dibromoethane	0.39	15.4 U	1.54 U	3.84 U	1.54 U	1.54 U	1.54 U	1.54 U	1.54 U	1.54 U	1.54 U	1.54 U
	Tetrachloroethene	70	13.6 U	**6.73**	3.39 U	**2.22**	1.36 U	**1.77**	**10.3**	1.36 U	**5.17**	**4.69**	**8.70**
	Chlorobenzene	115	9.20 U	0.920 U	2.30 U	0.920 U	0.920 U	0.920 U	0.920 U	0.920 U	0.920 U	0.920 U	0.920 U
	Ethylbenzene	370	8.68 U	0.868 U	**4.09**	0.868 U	0.868 U	0.868 U	0.868 U	**1.46**	**1.38**	**1.67**	0.868 U
	p/m-Xylene	1,000	17.4 U	1.74 U	**7.83**	1.74 U	**2.03**	1.74 U	1.74 U	**4.67**	**5.22**	**5.55**	**2.63**
	Bromoform	105	20.6 U	2.06 U	5.16 U	2.06 U	2.06 U	2.06 U	2.06 U	2.06 U	2.06 U	2.06 U	2.06 U
	Styrene	70	8.51 U	0.851 U	**3.33**	0.851 U	0.851 U	0.851 U	0.851 U	0.851 U	0.851 U	0.851 U	0.851 U
	1,1,2,2-Tetrachloroethane	2	13.7 U	1.37 U	3.43 U	1.37 U	1.37 U	1.37 U	1.37 U	1.37 U	1.37 U	1.37 U	1.37 U
	o-Xylene	1,000	8.68 U	0.868 U	2.17 U	0.868 U	0.868 U	0.868 U	0.868 U	**1.72**	**2.54**	**2.35**	**0.985**
	1,3-Dichlorobenzene	30	12.0 U	1.20 U	3.00 U	1.20 U	1.20 U	1.20 U	1.20 U	1.20 U	1.20 U	1.20 U	1.20 U
	1,4-Dichlorobenzene	25	12.0 U	1.20 U	3.00 U	1.20 U	1.20 U	1.20 U	1.20 U	1.20 U	1.20 U	1.20 U	1.20 U
	1,2-Dichlorobenzene	36	12.0 U	1.20 U	3.00 U	1.20 U	1.20 U	1.20 U	1.20 U	1.20 U	1.20 U	1.20 U	1.20 U
	1,2,4-Trichlorobenzene	170	14.8 U	1.48 U	3.71 U	1.48 U	1.48 U	1.48 U	1.48 U	1.48 U	1.48 U	1.48 U	1.48 U

Table 4
Summary of Analytical Results for Soil Gas Samples
2010 through 2015
New Bedford High School
New Bedford, Massachusetts

Analysis	Analyte	Sample Location:	PVP-1		PVP-2		PVP-3		PVP-4		PVP-5		
		Location Room:	Classroom A-115-4		Classroom A-115-3		Classroom A-112-3		Classroom A-115-2		Classroom A-105-1		
		Sample ID:	TVP-1	PVP-1	TVP-3	PVP-2	TVP-4	PVP-3	TVP-6	PVP-4	TVP-9		PVP-5
		Sample Date:	2/15/2010	4/20/2010	2/15/2010	4/20/2010	2/15/2010	4/20/2010	2/15/2010	4/20/2010	2/15/2010	2/15/2010 Field Dup	4/20/2010
		Screening Values*											
	Naphthalene	30	10.5 U	1.05 U	**3.31**	1.05 U	1.05 U	1.05 U	1.05 U	1.05 U	**3.84**	1.05 U	1.05 U
	Hexachlorobutadiene	5.5	21.3 U	2.13 U	5.33 U	2.13 U	2.13 U	2.13 U	2.13 U	2.13 U	2.13 U	2.13 U	2.13 U
	1,2,4-Trimethylbenzene	500(1)	9.82 U	0.982 U	2.46 U	0.982 U	0.982 U	0.982 U	0.982 U	**1.92**	**7.24**	**1.86**	0.982 U
	1,3,5-Trimethybenzene	500(1)	9.82 U	0.982 U	2.46 U	0.982 U	0.982 U	0.982 U	0.982 U	0.982 U	**1.39**	0.982 U	0.982 U
	2-Hexanone	NS	8.19 U	0.819 U	2.05 U	0.819 U	0.819 U	0.819 U	0.819 U	**1.41**	0.819 U	0.819 U	0.819 U
	Carbon disulfide	NS	6.22 U	0.622 U	**3.04**	**1.09**	0.622 U	0.622 U	0.622 U	0.622 U	0.622 U	0.622 U	0.622 U
	Chloroethane	NS	5.27 U	0.527 U	**1.83**	0.527 U	0.527 U	0.527 U	0.527 U	0.527 U	0.527 U	0.527 U	0.527 U
	Chloromethane	NS	4.13 U	0.413 U	**3.06**	0.413 U	**0.442**	0.413 U	0.413 U	**1.04**	0.413 U	0.413 U	**1.26**
	Dichlorodifluoromethane	NS	9.88 U	**3.29**	2.47 U	**2.78**	**2.44**	**2.61**	**2.26**	**2.02**	**2.26**	**2.65**	**3.34**
	Tetrahydrofuran	NS	5.89 U	0.589 U	1.47 U	0.589 U	0.589 U	0.589 U	0.589 U	0.589 U	0.589 U	0.589 U	**0.919**
	Trichlorofluoromethane	NS	11.2 U	**1.84**	2.81 U	**1.53**	**1.21**	**1.46**	1.12 U	**1.23**	1.12 U	**1.18**	**1.64**
	1,1,1,2-Tetrachloroethane	NS	13.7 U	1.37 U	3.43 U	1.37 U	1.37 U	1.37 U	1.37 U	1.37 U	1.37 U	1.37 U	1.37 U
	Isopropylbenzene	500(1)	**198**	0.982 U	**36.0**	0.982 U	**7.45**	0.982 U	0.982 U	0.982 U	0.982 U	0.982 U	0.982 U
	1,2,3-Trichloropropane	NS	12.0 U	1.20 U	3.01 U	1.20 U	1.20 U	1.20 U	1.20 U	1.20 U	1.20 U	1.20 U	1.20 U
	Bromobenzene	NS	12.8 U	1.28 U	3.21 U	1.28 U	1.28 U	1.28 U	1.28 U	1.28 U	1.28 U	1.28 U	1.28 U
	Dibromomethane	NS	14.2 U	1.42 U	3.55 U	1.42 U	1.42 U	1.42 U	1.42 U	1.42 U	1.42 U	1.42 U	1.42 U
	tert-Amyl Methyl Ether	NS	8.35 U	0.835 U	2.09 U	0.835 U	0.835 U	0.835 U	0.835 U	0.835 U	0.835 U	0.835 U	0.835 U
	2-Chlorotoluene	NS	10.3 U	1.03 U	2.59 U	1.03 U	1.03 U	1.03 U	1.03 U	1.03 U	1.03 U	1.03 U	1.03 U
	4-Chlorotoluene	NS	10.3 U	1.03 U	2.59 U	1.03 U	1.03 U	1.03 U	1.03 U	1.03 U	1.03 U	1.03 U	1.03 U
	2,2-Dichloropropane	NS	9.23 U	0.923 U	2.31 U	0.923 U	0.923 U	0.923 U	0.923 U	0.923 U	0.923 U	0.923 U	0.923 U
	1,1-Dichloropropene	NS	9.07 U	0.907 U	2.27 U	0.907 U	0.907 U	0.907 U	0.907 U	0.907 U	0.907 U	0.907 U	0.907 U
	Diisopropyl ether	NS	8.35 U	0.835 U	2.09 U	0.835 U	0.835 U	0.835 U	0.835 U	0.835 U	0.835 U	0.835 U	0.835 U
	tert-Butyl Ethyl Ether	NS	8.35 U	0.835 U	2.09 U	0.835 U	0.835 U	0.835 U	0.835 U	0.835 U	0.835 U	0.835 U	0.835 U
	1,2,3-Trichlorobenzene	NS	14.8 U	1.48 U	3.71 U	1.48 U	1.48 U	1.48 U	1.48 U	1.48 U	1.48 U	1.48 U	1.48 U
	Ethyl ether	NS	6.06 U	0.606 U	1.51 U	0.606 U	0.606 U	0.606 U	0.606 U	0.606 U	0.606 U	0.606 U	0.606 U
	n-Butylbenzene	500(1)	11.0 U	1.10 U	2.74 U	1.10 U	1.10 U	1.10 U	1.10 U	1.10 U	1.10 U	1.10 U	1.10 U
	sec-Butylbenzene	500(1)	11.0 U	1.10 U	2.74 U	1.10 U	1.10 U	1.10 U	1.10 U	1.10 U	1.10 U	1.10 U	1.10 U
	tert-Butylbenzene	500(1)	11.0 U	1.10 U	2.74 U	1.10 U	1.10 U	1.10 U	1.10 U	1.10 U	1.10 U	1.10 U	1.10 U
	1,2-Dibromo-3-chloropropane	NS	19.3 U	1.93 U	4.83 U	1.93 U	1.93 U	1.93 U	1.93 U	1.93 U	1.93 U	1.93 U	1.93 U
	p-Isopropyltoluene	500(1)	11.0 U	1.10 U	2.74 U	1.10 U	1.10 U	1.10 U	1.10 U	1.10 U	1.10 U	1.10 U	1.10 U
	n-Propylbenzene	500(1)	9.82 U	0.982 U	2.46 U	0.982 U	0.982 U	0.982 U	0.982 U	0.982 U	0.982 U	0.982 U	0.982 U
	1,3-Dichloropropane	NS	9.23 U	0.923 U	2.31 U	0.923 U	0.923 U	0.923 U	0.923 U	0.923 U	0.923 U	0.923 U	0.923 U

Notes:

ug/m3 - micrograms per cubic meters.

E - Value exceeds calibration range.

NA - Sample not analyzed for the listed analyte.

NS - No MassDEP standards exist for this compound.

U - Compound was not detected at specified quantitation limit.

Values in **Bold** indicate the compound was detected.

TO - Toxic organics.

* - Soil Gas Screening Values are based on 50x the MassDEP Indoor Residential Air Threshold Values from Vapor Intrusion Guidance - Interim Final, December 2011 with updated screening values from February 22 and March 7, 2013 which represents a conservative soil gas to indoor air dilution attenuation factor.

(1) - IATV for C9-C10 aromatics used.

Table 4
Summary of Analytical Results for Soil Gas Samples
2010 through 2015
New Bedford High School
New Bedford, Massachusetts

Analysis	Analyte	Sample Location:	PVP-6					PVP-7		PVP-8		TVP-2	TVP-5	TVP-7	TVP-8	MW-27R/INLET
		Location Room:	Mechanical Room B-114					Wood Shop D-105		Auto Shop D-116		Classroom A-105-4	Classroom A-105-3	Classroom A-105-2	Classroom A-115-1	System Inlet
		Sample ID:	PVP-6					TVP-10	PVP-7	TVP-11	PVP-8	TVP-2	TVP-5	TVP-7	TVP-8	MW-27R/INLET
		Sample Date:	4/9/2010	4/20/2010	9/2/2014	1/3/2015	7/27/2015	2/15/2010	4/20/2010	2/15/2010	4/20/2010	2/15/2010	2/15/2010	2/15/2010	2/15/2010	9/2/2014
		Screening Values*														
TO-15																
(ug/m3)	Vinyl chloride	13.5	**1,680**	**2,960**	**94.3**	**0.286**	**1.98**	0.511 U	0.511 U	5.11 U	1.02 U	0.511 U	0.511 U	0.511 U	0.511 U	**2.13**
	Bromomethane	30	9.15 U	8.76 U	0.259 U	0.155 U	0.259 U	0.776 U	0.776 U	7.76 U	1.55 U	0.776 U	0.776 U	0.776 U	0.776 U	0.078 U
	Acetone	4,550	560 U	536 U	7.91 U	4.75 U	7.91 U	**325**	**13.3**	**4,730**	**62.8**	**94.8**	**31.0**	**46.7**	**167**	**5.06**
	1,1-Dichloroethene	40	**163**	**594**	0.264 U	0.159 U	0.264 U	**2.20**	0.792 U	7.92 U	1.58 U	0.792 U	0.792 U	0.792 U	0.792 U	0.079 U
	Methylene chloride	550	409 U	392 U	16.2 U	9.73 U	5.80 U	1.74 U	1.74 U	17.4 U	3.47 U	1.74 U	1.74 U	1.74 U	1.74 U	4.86 U
	trans-1,2-Dichloroethene	40	**33,400**	**73,100 E**	**488**	**87.6**	**306**	0.792 U	0.792 U	7.92 U	1.58 U	0.792 U	0.792 U	0.792 U	0.792 U	**3.96**
	1,1-Dichloroethane	40	9.54 U	9.13 U	0.270 U	0.162 U	0.270 U	0.809 U	0.809 U	8.09 U	1.62 U	0.809 U	0.809 U	0.809 U	0.809 U	0.081 U
	Methyl tert butyl ether	1,950	8.49 U	8.13 U	0.240 U	0.144 U	2.40 U	0.720 U	0.720 U	7.20 U	1.44 U	0.720 U	0.720 U	0.720 U	0.720 U	0.072 U
	2-Butanone	600	174 U	166 U	1.97 U	1.18 U	4.93 U	**19.1**	**1.64**	5.89 U	**6.32**	**4.06**	**2.93**	**5.08**	**5.68**	**1.16**
	cis-1,2-Dichloroethene	40	**1,270**	**5,430**	**24.2**	**11.6**	**29.0**	0.792 U	0.792 U	7.92 U	1.58 U	0.792 U	0.792 U	0.792 U	0.792 U	**3.13**
	Chloroform	95	**12.6**	**33.6**	**3.91**	**2.90**	**4.70**	0.976 U	0.976 U	9.76 U	1.95 U	0.976 U	0.976 U	0.976 U	0.976 U	**0.899**
	1,2-Dichloroethane	4.5	9.54 U	9.13 U	0.270 U	0.162 U	0.270 U	0.809 U	0.809 U	8.09 U	1.62 U	0.809 U	0.809 U	0.809 U	0.809 U	0.081 U
	1,1,1-Trichloroethane	150	12.8 U	12.3 U	**1.95**	**1.55**	**1.40**	**12.7**	**2.15**	10.9 U	2.18 U	1.09 U	1.09 U	1.09 U	1.09 U	**0.147**
	Benzene	115	37.6 U	36 U	1.06 U	**1.21**	**1.10**	**4.38**	**3.62**	6.38 U	**10.4**	**1.36**	**1.54**	**1.42**	**1.60**	0.319 U
	Carbon tetrachloride	27	14.8 U	14.2 U	0.420 U	**0.302**	0.420 U	1.26 U	1.26 U	12.6 U	2.51 U	1.26 U	1.26 U	1.26 U	1.26 U	**0.403**
	1,2-Dichloropropane	6	10.9 U	10.4 U	0.308 U	0.185 U	0.308 U	0.924 U	0.924 U	9.24 U	1.85 U	0.924 U	0.924 U	0.924 U	0.924 U	0.092 U
	Bromodichloromethane	6.5	15.8 U	**67.3**	0.447 U	0.268 U	0.447 U	1.34 U	1.34 U	13.4 U	2.68 U	1.34 U	1.34 U	1.34 U	1.34 U	0.134 U
	Trichloroethene	20	**3,120**	**7,160**	**530**	**326**	**828**	1.07 U	1.07 U	10.7 U	2.15 U	1.07 U	1.07 U	1.07 U	1.07 U	0.360 U
	1,4-Dioxane	28.5	42.4 U	40.6 U	1.20 U	0.721 U	1.20 U	0.720 U	0.720 U	7.20 U	1.44 U	0.720 U	0.720 U	0.720 U	0.720 U	**8.81**
	cis-1,3-Dichloropropene	29	10.7 U	10.2 U	0.303 U	0.182 U	0.303 U	0.907 U	0.907 U	9.07 U	1.81 U	0.907 U	0.907 U	0.907 U	0.907 U	0.091 U
	4-Methyl-2-pentanone	110	241 U	231 U	2.73 U	1.64 U	6.84 U	**24.2**	0.819 U	8.19 U	1.64 U	**1.31**	0.819 U	**2.04**	**2.83**	0.82 U
	trans-1,3-Dichloropropene	29	10.7 U	10.2 U	0.303 U	0.182 U	0.303 U	0.907 U	0.907 U	9.07 U	1.81 U	0.907 U	0.907 U	0.907 U	0.907 U	0.091 U
	1,1,2-Trichloroethane	7.5	12.8 U	12.3 U	0.364 U	0.218 U	0.364 U	1.09 U	1.09 U	10.9 U	2.18 U	1.09 U	1.09 U	1.09 U	1.09 U	0.109 U
	Toluene	2,700	22.2 U	21.2 U	**0.652**	**0.407**	**1.90**	**17.6**	**0.764**	7.53 U	1.51 U	**2.57**	**1.19**	**0.761**	**3.67**	**1.52**
	Dibromochloromethane	4.85	20.1 U	19.2 U	0.568 U	0.341 U	0.568 U	1.70 U	1.70 U	17.0 U	3.40 U	1.70 U	1.70 U	1.70 U	1.70 U	0.170 U
	1,2-Dibromoethane	0.39	18.1 U	17.3 U	0.513 U	0.307 U	0.513 U	1.54 U	1.54 U	15.4 U	3.07 U	1.54 U	1.54 U	1.54 U	1.54 U	0.154 U
	Tetrachloroethene	70	**1,930**	**51.3**	**2.92**	**1.80**	**4.14**	**2.20**	**4.70**	**39.2**	**61.9**	**1.79**	**1.48**	**2.90**	**2.18**	**0.821**
	Chlorobenzene	115	10.8 U	10.4 U	**1.74**	**1.13**	**1.98**	0.920 U	0.920 U	9.20 U	1.84 U	0.920 U	0.920 U	0.920 U	0.920 U	**0.115**
	Ethylbenzene	370	10.2 U	9.8 U	0.290 U	0.174 U	**0.521**	**6.21**	0.868 U	8.68 U	1.74 U	0.868 U	0.868 U	0.868 U	0.868 U	**0.365**
	p/m-Xylene	1,000	10.7 U	10.2 U	0.578 U	0.347 U	**2.03**	**39.8**	1.74 U	**23.7**	3.47 U	**1.91**	1.74 U	1.74 U	1.74 U	**1.91**
	Bromoform	105	24.4 U	23.3 U	0.690 U	0.414 U	0.690 U	2.06 U	2.06 U	20.6 U	4.13 U	2.06 U	2.06 U	2.06 U	2.06 U	0.207 U
	Styrene	70	10.0 U	9.61 U	0.284 U	0.170 U	0.284 U	0.851 U	0.851 U	8.51 U	1.70 U	0.851 U	0.851 U	0.851 U	0.851 U	**0.102**
	1,1,2,2-Tetrachloroethane	2	16.2 U	15.5 U	0.458 U	0.275 U	0.458 U	1.37 U	1.37 U	13.7 U	2.74 U	1.37 U	1.37 U	1.37 U	1.37 U	0.137 U
	o-Xylene	1,000	10.2 U	9.8 U	0.290 U	0.174 U	**0.882**	**12.8**	0.868 U	**13.5**	1.74 U	0.868 U	0.868 U	0.868 U	0.868 U	**2.02**
	1,3-Dichlorobenzene	30	14.2 U	13.6 U	0.401 U	0.240 U	0.401 U	1.20 U	1.20 U	12.0 U	2.40 U	1.20 U	1.20 U	1.20 U	1.20 U	**0.120**
	1,4-Dichlorobenzene	25	14.2 U	13.6 U	0.401 U	0.240 U	0.401 U	1.20 U	1.20 U	12.0 U	2.40 U	1.20 U	1.20 U	1.20 U	1.20 U	**0.283**
	1,2-Dichlorobenzene	36	14.2 U	13.6 U	0.401 U	0.240 U	0.401 U	1.20 U	1.20 U	12.0 U	2.40 U	1.20 U	1.20 U	1.20 U	1.20 U	0.120 U
	1,2,4-Trichlorobenzene	170	43.7 U	41.8 U	1.24 U	0.742 U	1.24 U	1.48 U	1.48 U	14.8 U	2.97 U	1.48 U	1.48 U	1.48 U	1.48 U	0.371 U

Table 4
Summary of Analytical Results for Soil Gas Samples
2010 through 2015
New Bedford High School
New Bedford, Massachusetts

Analysis	Analyte	Sample Location:	PVP-6					PVP-7		PVP-8		TVP-2	TVP-5	TVP-7	TVP-8	MW-27R/INLET
		Location Room:	Mechanical Room B-114					Wood Shop D-105		Auto Shop D-116		Classroom A-105-4	Classroom A-105-3	Classroom A-105-2	Classroom A-115-1	System Inlet
		Sample ID:	PVP-6					TVP-10	PVP-7	TVP-11	PVP-8	TVP-2	TVP-5	TVP-7	TVP-8	MW-27R/INLET
		Sample Date:	4/9/2010	4/20/2010	9/2/2014	1/3/2015	7/27/2015	2/15/2010	4/20/2010	2/15/2010	4/20/2010	2/15/2010	2/15/2010	2/15/2010	2/15/2010	9/2/2014
		Screening Values*														
	Naphthalene	30	30.9 U	29.6 U	**20**	**0.703**	0.876 U	**3.22**	1.05 U	10.5 U	2.10 U	1.05 U	1.05 U	1.05 U	1.05 U	**7.18**
	Hexachlorobutadiene	5.5	62.8 U	60.2 U	1.78 U	1.07 U	1.78 U	2.13 U	2.13 U	21.3 U	4.26 U	2.13 U	2.13 U	2.13 U	2.13 U	0.533 U
	1,2,4-Trimethylbenzene	500(1)	116 U	55.4 U	NA	NA	NA	**16.1**	0.982 U	9.82 U	1.96 U	**1.78**	0.982 U	0.982 U	0.982 U	NA
	1,3,5-Trimethybenzene	500(1)	116 U	55.4 U	NA	NA	NA	**3.19**	0.982 U	9.82 U	1.96 U	0.982 U	0.982 U	0.982 U	0.982 U	NA
	2-Hexanone	NS	96.5 U	46.2 U	NA	NA	NA	0.819 U	0.819 U	8.19 U	1.64 U	0.819 U	0.819 U	0.819 U	0.819 U	NA
	Carbon disulfide	NS	73.4 U	35.1 U	NA	NA	NA	0.622 U	0.622 U	6.22 U	1.24 U	0.622 U	0.622 U	0.622 U	0.622 U	NA
	Chloroethane	NS	62.2 U	29.8 U	NA	NA	NA	**0.678**	0.527 U	5.27 U	1.05 U	0.527 U	0.527 U	0.527 U	0.527 U	NA
	Chloromethane	NS	48.6 U	23.3 U	NA	NA	NA	**0.792**	**0.512**	4.13 U	**3.18**	0.413 U	0.413 U	0.413 U	**0.454**	NA
	Dichlorodifluoromethane	NS	116 U	55.8 U	NA	NA	NA	**2.35**	**2.59**	9.88 U	**2.83**	**2.15**	**2.21**	**2.32**	**2.45**	NA
	Tetrahydrofuran	NS	69.5 U	33.3 U	NA	NA	NA	**30.7**	0.589 U	5.89 U	1.18 U	0.589 U	0.589 U	0.589 U	0.589 U	NA
	Trichlorofluoromethane	NS	132 U	63.4 U	NA	NA	NA	**1.21**	**1.41**	11.2 U	2.24 U	**1.17**	1.12 U	1.12 U	**1.26**	NA
	1,1,1,2-Tetrachloroethane	NS	162 U	77.4 U	NA	NA	NA	1.37 U	1.37 U	13.7 U	2.74 U	1.37 U	1.37 U	1.37 U	1.37 U	NA
	Isopropylbenzene	500(1)	116 U	55.4 U	NA	NA	NA	0.982 U	0.982 U	9.82 U	1.96 U	0.982 U	0.982 U	0.982 U	**39.3**	NA
	1,2,3-Trichloropropane	NS	142 U	68.0 U	NA	NA	NA	1.20 U	1.20 U	12.0 U	2.41 U	1.20 U	1.20 U	1.20 U	1.20 U	NA
	Bromobenzene	NS	151 U	72.4 U	NA	NA	NA	1.28 U	1.28 U	12.8 U	2.57 U	1.28 U	1.28 U	1.28 U	1.28 U	NA
	Dibromomethane	NS	168 U	80.2 U	NA	NA	NA	1.42 U	1.42 U	14.2 U	2.84 U	1.42 U	1.42 U	1.42 U	1.42 U	NA
	tert-Amyl Methyl Ether	NS	98.4 U	47.1 U	NA	NA	NA	0.835 U	0.835 U	8.35 U	1.67 U	0.835 U	0.835 U	0.835 U	0.835 U	NA
	2-Chlorotoluene	NS	122 U	58.4 U	NA	NA	NA	1.03 U	1.03 U	10.3 U	2.07 U	1.03 U	1.03 U	1.03 U	1.03 U	NA
	4-Chlorotoluene	NS	122 U	58.4 U	NA	NA	NA	1.03 U	1.03 U	10.3 U	2.07 U	1.03 U	1.03 U	1.03 U	1.03 U	NA
	2,2-Dichloropropane	NS	109 U	52.1 U	NA	NA	NA	0.923 U	0.923 U	9.23 U	1.85 U	0.923 U	0.923 U	0.923 U	0.923 U	NA
	1,1-Dichloropropene	NS	107 U	51.2 U	NA	NA	NA	0.907 U	0.907 U	9.07 U	1.81 U	0.907 U	0.907 U	0.907 U	0.907 U	NA
	Diisopropyl ether	NS	98.4 U	47.1 U	NA	NA	NA	0.835 U	0.835 U	8.35 U	1.67 U	0.835 U	0.835 U	0.835 U	0.835 U	NA
	tert-Butyl Ethyl Ether	NS	98.5 U	47.2 U	NA	NA	NA	0.835 U	0.835 U	8.35 U	1.67 U	0.835 U	0.835 U	0.835 U	0.835 U	NA
	1,2,3-Trichlorobenzene	NS	175 U	83.7 U	NA	NA	NA	1.48 U	1.48 U	14.8 U	2.97 U	1.48 U	1.48 U	1.48 U	1.48 U	NA
	Ethyl ether	NS	71.4 U	34.2 U	NA	NA	NA	0.606 U	0.606 U	6.06 U	1.21 U	0.606 U	0.606 U	0.606 U	0.606 U	NA
	n-Butylbenzene	500(1)	129 U	61.9 U	NA	NA	NA	**1.71**	1.10 U	11.0 U	2.19 U	1.10 U	1.10 U	1.10 U	1.10 U	NA
	sec-Butylbenzene	500(1)	129 U	61.9 U	NA	NA	NA	1.10 U	1.10 U	11.0 U	2.19 U	1.10 U	1.10 U	1.10 U	1.10 U	NA
	tert-Butylbenzene	500(1)	129 U	61.9 U	NA	NA	NA	**1.91**	1.10 U	11.0 U	2.19 U	1.10 U	1.10 U	1.10 U	**3.66**	NA
	1,2-Dibromo-3-chloropropane	NS	228 U	109 U	NA	NA	NA	1.93 U	1.93 U	19.3 U	3.86 U	1.93 U	1.93 U	1.93 U	1.93 U	NA
	p-Isopropyltoluene	500(1)	129 U	61.9 U	NA	NA	NA	1.10 U	1.10 U	11.0 U	2.19 U	1.10 U	1.10 U	1.10 U	1.10 U	NA
	n-Propylbenzene	500(1)	116 U	55.4 U	NA	NA	NA	**1.85**	0.982 U	9.82 U	1.96 U	0.982 U	0.982 U	0.982 U	0.982 U	NA
	1,3-Dichloropropane	NS	109 U	52.1 U	NA	NA	NA	0.923 U	0.923 U	9.23 U	1.85 U	0.923 U	0.923 U	0.923 U	0.923 U	NA

Notes:

ug/m3 - micrograms per cubic meters.

E - Value exceeds calibration range.

NA - Sample not analyzed for the listed analyte.

NS - No MassDEP standards exist for this compound.

U - Compound was not detected at specified quantitation limit.

Values in **Bold** indicate the compound was detected.

TO - Toxic organics.

* - Soil Gas Screening Values are based on 50x the MassDEP Indoor Residential Air Threshold Values from Vapor Intrusion Guidance - Interim Final, December 2011 with updated screening values from February 22 and March 7, 2013 which represents a conservative soil gas to indoor air dilution attenuation factor.

(1) - IATV for C9-C10 aromatics used.

Table 5
Summary of Hydraulic Control System Results for Water Samples
2012 through 2015
New Bedford High School
New Bedford, Massachusetts

Analysis	Analyte	Sample Port:	SP-1																					
		Sample ID:	INFLUENT	INFLUENT	INFLUENT	INFLUENT	INFLUENT	INFLUENT	INFLUENT	INFLUENT	INFLUENT	MW-27-R	MW-42-R	INFLUENT	INFLUENT	INFLUENT	INFLUENT	INFLUENT	INFLUENT	INFLUENT	INFLUENT	INFLUENT (FILTERED)	INFLUENT	INFLUENT (FILTERED)
		Filter Size (micron)^^	N/A	N/A	N/A	N/A	N/A	N/A	N/A	N/A	N/A	N/A	N/A	N/A	N/A	N/A	N/A	N/A	N/A	N/A	N/A	0.45	N/A	0.20
		Sample Date:	3/20/2012	3/27/2012	4/3/2012	4/10/2012	4/17/2012	5/14/2012	6/11/2012	7/16/2012	8/21/2012	9/18/2012	9/18/2012	10/18/2012	11/21/2012	12/12/2012	1/15/2013	2/15/2013	3/13/2013	4/16/2013	5/16/2013	5/16/2013	6/18/2013	6/18/2013
		Limits*																						
VOCs																								
(ug/L)	Methylene chloride	N/A	400 U	500 U	200 U	200 U	40 U	100 U	2.0 U	20 U	80 U	4.0 U	40 U	10 U	10 U	10 U	5.0 U	10 U	2.0 U	2.0 U	2.0 U	NA	2.0 U	NA
	1,1-Dichloroethane	N/A	200 U	250 U	100 U	100 U	20 U	50 U	1.0 U	10 U	40 U	2.0 U	20 U	5.0 U	5.0 U	5.0 U	2.5 U	5.0 U	1.0 U	1.0 U	1.0 U	NA	1.0 U	NA
	Chloroform	N/A	200 U	250 U	100 U	100 U	20 U	50 U	1.0 U	10 U	40 U	2.0 U	20 U	5.0 U	5.0 U	5.0 U	2.5 U	5.0 U	1.0 U	1.0 U	1.0 U	NA	1.0 U	NA
	Carbon tetrachloride	N/A	200 U	250 U	100 U	100 U	20 U	50 U	1.0 U	10 U	40 U	2.0 U	20 U	5.0 U	5.0 U	5.0 U	2.5 U	5.0 U	1.0 U	1.0 U	1.0 U	NA	1.0 U	NA
	1,2-Dichloropropane	N/A	200 U	250 U	100 U	100 U	20 U	50 U	1.0 U	10 U	40 U	2.0 U	20 U	5.0 U	5.0 U	5.0 U	2.5 U	5.0 U	1.0 U	1.0 U	1.0 U	NA	1.0 U	NA
	Dibromochloromethane	N/A	200 U	250 U	100 U	100 U	20 U	50 U	1.0 U	10 U	40 U	2.0 U	20 U	5.0 U	5.0 U	5.0 U	2.5 U	5.0 U	1.0 U	1.0 U	1.0 U	NA	1.0 U	NA
	1,1,2-Trichloroethane	N/A	200 U	250 U	100 U	100 U	20 U	50 U	1.0 U	10 U	40 U	2.0 U	20 U	5.0 U	5.0 U	5.0 U	2.5 U	5.0 U	1.0 U	1.0 U	1.0 U	NA	1.0 U	NA
	Tetrachloroethene	N/A	200 U	250 U	100 U	100 U	20 U	50 U	1.0 U	10 U	40 U	2.0 U	20 U	5.0 U	5.0 U	5.0 U	2.5 U	5.0 U	1.0 U	1.0 U	1.0 U	NA	1.0 U	NA
	Chlorobenzene	N/A	200 U	250 U	100 U	100 U	20 U	50 U	**3.5**	10 U	40 U	**2.7**	20 U	5.0 U	5.0 U	5.0 U	2.5 U	5.0 U	1.0 U	1.0 U	1.0 U	NA	1.0 U	NA
	Trichlorofluoromethane	N/A	400 U	500 U	200 U	200 U	40 U	100 U	2.0 U	20 U	80 U	4.0 U	40 U	10 U	10 U	10 U	5.0 U	10 U	2.0 U	2.0 U	2.0 U	NA	2.0 U	NA
	1,2-Dichloroethane	N/A	200 U	250 U	100 U	100 U	20 U	50 U	1.0 U	10 U	40 U	2.0 U	20 U	5.0 U	5.0 U	5.0 U	2.5 U	5.0 U	1.0 U	1.0 U	1.0 U	NA	1.0 U	NA
	1,1,1-Trichloroethane	N/A	200 U	250 U	100 U	100 U	20 U	50 U	1.0 U	10 U	40 U	2.0 U	20 U	5.0 U	5.0 U	5.0 U	2.5 U	5.0 U	1.0 U	1.0 U	1.0 U	NA	1.0 U	NA
	Bromodichloromethane	N/A	200 U	250 U	100 U	100 U	20 U	50 U	1.0 U	10 U	40 U	2.0 U	20 U	5.0 U	5.0 U	5.0 U	2.5 U	5.0 U	1.0 U	1.0 U	1.0 U	NA	1.0 U	NA
	trans-1,3-Dichloropropene	N/A	100 U	120 U	50 U	50 U	10 U	25 U	0.50 U	5.0 U	20 U	1.0 U	10 U	2.5 U	2.5 U	2.5 U	1.2 U	2.5 U	0.50 U	0.50 U	0.50 U	NA	0.50 U	NA
	cis-1,3-Dichloropropene	N/A	100 U	120 U	50 U	50 U	10 U	25 U	0.50 U	5.0 U	20 U	1.0 U	10 U	2.5 U	2.5 U	2.5 U	1.2 U	2.5 U	0.50 U	0.50 U	0.50 U	NA	0.50 U	NA
	1,3-Dichloropropene, Total	N/A	NA	NA	NA	NA	NA	NA	NA	NA	NA	NA	NA	NA	NA	NA	NA	NA	NA	NA	NA	NA	NA	NA
	1,1-Dichloropropene	N/A	400 U	500 U	200 U	200 U	40 U	100 U	2.0 U	20 U	80 U	4.0 U	40 U	10 U	10 U	10 U	5.0 U	10 U	2.0 U	2.0 U	2.0 U	NA	2.0 U	NA
	Bromoform	N/A	400 U	500 U	200 U	200 U	40 U	100 U	2.0 U	20 U	80 U	4.0 U	40 U	10 U	10 U	10 U	5.0 U	10 U	2.0 U	2.0 U	2.0 U	NA	2.0 U	NA
	1,1,2,2-Tetrachloroethane	N/A	200 U	250 U	100 U	100 U	20 U	50 U	1.0 U	10 U	40 U	2.0 U	20 U	5.0 U	5.0 U	5.0 U	2.5 U	5.0 U	1.0 U	1.0 U	1.0 U	NA	1.0 U	NA
	Benzene	N/A	100 U	120 U	50 U	50 U	10 U	25 U	0.50 U	5.0 U	20 U	1.0 U	10 U	2.5 U	2.5 U	2.5 U	1.2 U	2.5 U	0.50 U	0.50 U	0.50 U	NA	0.50 U	NA
	Toluene	N/A	200 U	250 U	100 U	100 U	20 U	50 U	1.0 U	10 U	40 U	2.0 U	20 U	5.0 U	5.0 U	5.0 U	2.5 U	5.0 U	1.0 U	1.0 U	1.0 U	NA	1.0 U	NA
	Ethylbenzene	N/A	200 U	250 U	100 U	100 U	**30**	50 U	**24**	**15**	40 U	**7.7**	20 U	5.0 U	5.0 U	5.0 U	2.5 U	5.0 U	1.0 U	**1.0**	1.0 U	NA	1.0 U	NA
	Chloromethane	N/A	400 U	500 U	200 U	200 U	40 U	100 U	2.0 U	20 U	80 U	4.0 U	40 U	10 U	10 U	10 U	5.0 U	10 U	2.0 U	2.0 U	2.0 U	NA	2.0 U	NA
	Bromomethane	N/A	400 U	500 U	200 U	200 U	40 U	100 U	2.0 U	20 U	80 U	4.0 U	40 U	10 U	10 U	10 U	5.0 U	10 U	2.0 U	2.0 U	2.0 U	NA	2.0 U	NA
	Vinyl chloride	N/A	**350**	**320**	**400**	**440**	**550**	50 U	**130**	**190**	**220**	**24**	**58**	**18**	**14**	**25**	**6.2**	**7.9**	**2.2**	**7.8**	**8.8**	NA	**14**	NA
	Chloroethane	N/A	400 U	500 U	200 U	200 U	40 U	100 U	2.0 U	20 U	80 U	4.0 U	40 U	10 U	10 U	10 U	5.0 U	10 U	2.0 U	2.0 U	2.0 U	NA	2.0 U	NA
	1,1-Dichloroethene	N/A	200 U	250 U	100 U	100 U	20 U	50 U	1.0 U	10 U	40 U	2.0 U	20 U	5.0 U	5.0 U	5.0 U	2.5 U	5.0 U	1.0 U	1.0 U	1.0 U	NA	1.0 U	NA
	trans-1,2-Dichloroethene	N/A	**1,100**	**460**	**490**	**400**	**550**	50 U	**200**	**250**	**740**	**23**	**250**	**110**	**81**	**110**	**45**	**45**	**1.6**	**30**	**32**	NA	**36**	NA
	Trichloroethene	N/A	**19,000**	**24,000**	**8,900**	**6,800**	**3,200**	50 U	**180**	**89**	**50**	**31**	**150**	**51**	**29**	**40**	**17**	**15**	**1.0**	**12**	**13**	NA	**14**	NA
	1,2-Dichlorobenzene	N/A	200 U	250 U	100 U	100 U	20 U	50 U	**4.0**	10 U	40 U	**4.9**	20 U	5.0 U	5.0 U	5.0 U	2.5 U	5.0 U	1.0 U	1.0 U	1.0 U	NA	1.0 U	NA
	1,3-Dichlorobenzene	N/A	200 U	250 U	100 U	100 U	20 U	50 U	**11**	**13**	40 U	**14**	20 U	5.0 U	5.0 U	5.0 U	2.5 U	5.0 U	**1.2**	**2.0**	**2.1**	NA	**1.5**	NA
	1,4-Dichlorobenzene	N/A	200 U	250 U	100 U	100 U	**38**	50 U	**50**	**59**	40 U	**67**	**26**	**20**	**8.6**	**19**	**7.8**	**9.7**	**4.9**	**8.2**	**6.0**	NA	**4.3**	NA
	Methyl tert butyl ether	N/A	400 U	500 U	200 U	200 U	40 U	100 U	2.0 U	20 U	80 U	4.0 U	40 U	10 U	10 U	10 U	5.0 U	10 U	2.0 U	2.0 U	2.0 U	NA	2.0 U	NA
	p/m-Xylene	N/A	400 U	500 U	200 U	200 U	40 U	100 U	2.0 U	20 U	80 U	4.0 U	40 U	10 U	10 U	10 U	5.0 U	10 U	2.0 U	2.0 U	2.0 U	NA	2.0 U	NA
	o-Xylene	N/A	200 U	250 U	100 U	100 U	20 U	50 U	1.0 U	10 U	40 U	2.0 U	20 U	5.0 U	5.0 U	5.0 U	2.5 U	5.0 U	1.0 U	1.0 U	1.0 U	NA	1.0 U	NA
	Xylene (Total)	N/A	NA	NA	NA	NA	NA	NA	NA	NA	NA	NA	NA	NA	NA	NA	NA	NA	NA	NA	NA	NA	NA	NA
	cis-1,2-Dichloroethene	N/A	**3,300**	**1,600**	**1,900**	**1,600**	**1,800**	50 U	**690**	**950**	**3,100**	**120**	**1,100**	**450**	**320**	**340**	**170**	**160**	**4.6**	**72**	**88**	NA	**140**	NA
	1,2-Dichloroethene (total)	N/A	NA	NA	NA	NA	NA	NA	NA	NA	NA	NA	NA	NA	NA	NA	NA	NA	NA	NA	NA	NA	NA	NA
	Dibromomethane	N/A	400 U	500 U	200 U	200 U	40 U	100 U	2.0 U	20 U	80 U	4.0 U	40 U	10 U	10 U	10 U	5.0 U	10 U	2.0 U	2.0 U	2.0 U	NA	2.0 U	NA
	1,2,3-Trichloropropane	N/A	400 U	500 U	200 U	200 U	40 U	100 U	2.0 U	20 U	80 U	4.0 U	40 U	10 U	10 U	10 U	5.0 U	10 U	2.0 U	2.0 U	2.0 U	NA	2.0 U	NA
	Styrene	N/A	200 U	250 U	100 U	100 U	**21**	50 U	**1.2**	10 U	40 U	2.0 U	20 U	5.0 U	5.0 U	5.0 U	2.5 U	5.0 U	1.0 U	1.0 U	1.0 U	NA	1.0 U	NA
	Dichlorodifluoromethane	N/A	400 U	500 U	200 U	200 U	40 U	100 U	2.0 U	20 U	80 U	4.0 U	40 U	10 U	10 U	10 U	5.0 U	10 U	2.0 U	2.0 U	2.0 U	NA	2.0 U	NA
	Acetone	N/A	1,000 U	1,200 U	500 U	500 U	100 U	250 U	**7.8**	50 U	200 U	10 U	100 U	25 U	25 U	25 U	12 U	25 U	5.0 U	5.0 U	5.0 U	NA	**8.7**	NA
	Carbon disulfide	N/A	400 U	500 U	200 U	200 U	40 U	100 U	2.0 U	20 U	80 U	4.0 U	40 U	10 U	10 U	10 U	5.0 U	10 U	2.0 U	2.0 U	2.0 U	NA	2.0 U	NA
	2-Butanone	N/A	1,000 U	1,200 U	500 U	500 U	100 U	250 U	5.0 U	50 U	200 U	10 U	100 U	25 U	25 U	25 U	12 U	25 U	5.0 U	5.0 U	5.0 U	NA	5.0 U	NA

Table 5
Summary of Hydraulic Control System Results for Water Samples
2012 through 2015
New Bedford High School
New Bedford, Massachusetts

Analysis	Analyte	Sample Port:	SP-1																					
		Sample ID:	INFLUENT	INFLUENT	INFLUENT	INFLUENT	INFLUENT	INFLUENT	INFLUENT	INFLUENT	INFLUENT	MW-27-R	MW-42-R	INFLUENT	INFLUENT	INFLUENT	INFLUENT	INFLUENT	INFLUENT	INFLUENT	INFLUENT	INFLUENT (FILTERED)	INFLUENT	INFLUENT (FILTERED)
		Filter Size (micron)^	N/A	N/A	N/A	N/A	N/A	N/A	N/A	N/A	N/A	N/A	N/A	N/A	N/A	N/A	N/A	N/A	N/A	N/A	N/A	0.45	N/A	0.20
		Sample Date:	3/20/2012	3/27/2012	4/3/2012	4/10/2012	4/17/2012	5/14/2012	6/11/2012	7/16/2012	8/21/2012	9/18/2012	9/18/2012	10/18/2012	11/21/2012	12/12/2012	1/15/2013	2/15/2013	3/13/2013	4/16/2013	5/16/2013	5/16/2013	6/18/2013	6/18/2013
		Limits*																						
	4-Methyl-2-pentanone	N/A	1,000 U	1,200 U	500 U	500 U	100 U	250 U	5.0 U	50 U	200 U	10 U	100 U	25 U	25 U	25 U	12 U	25 U	5.0 U	5.0 U	5.0 U	NA	5.0 U	NA
	2-Hexanone	N/A	1,000 U	1,200 U	500 U	500 U	100 U	250 U	5.0 U	50 U	200 U	10 U	100 U	25 U	25 U	25 U	12 U	25 U	5.0 U	5.0 U	5.0 U	NA	5.0 U	NA
	Bromochloromethane	N/A	400 U	500 U	200 U	200 U	40 U	100 U	2.0 U	20 U	80 U	4.0 U	40 U	10 U	10 U	10 U	5.0 U	10 U	2.0 U	2.0 U	2.0 U	NA	2.0 U	NA
	Tetrahydrofuran	N/A	1,000 U	1,200 U	500 U	500 U	100 U	250 U	5.0 U	50 U	200 U	10 U	100 U	25 U	25 U	25 U	12 U	25 U	5.0 U	5.0 U	2.0 U	NA	2.0 U	NA
	2,2-Dichloropropane	N/A	400 U	500 U	200 U	200 U	40 U	100 U	2.0 U	20 U	80 U	4.0 U	40 U	10 U	10 U	10 U	5.0 U	10 U	2.0 U	2.0 U	2.0 U	NA	2.0 U	NA
	1,2-Dibromoethane	N/A	400 U	500 U	200 U	200 U	40 U	100 U	2.0 U	20 U	80 U	4.0 U	40 U	10 U	10 U	10 U	5.0 U	10 U	2.0 U	2.0 U	2.0 U	NA	2.0 U	NA
	1,3-Dichloropropane	N/A	400 U	500 U	200 U	200 U	40 U	100 U	2.0 U	20 U	80 U	4.0 U	40 U	10 U	10 U	10 U	5.0 U	10 U	2.0 U	2.0 U	2.0 U	NA	2.0 U	NA
	1,1,1,2-Tetrachloroethane	N/A	200 U	250 U	100 U	100 U	20 U	50 U	1.0 U	10 U	40 U	2.0 U	20 U	5.0 U	5.0 U	5.0 U	2.5 U	5.0 U	1.0 U	1.0 U	1.0 U	NA	1.0 U	NA
	Bromobenzene	N/A	400 U	500 U	200 U	200 U	40 U	100 U	2.0 U	20 U	80 U	4.0 U	40 U	10 U	10 U	10 U	5.0 U	10 U	2.0 U	2.0 U	2.0 U	NA	2.0 U	NA
	n-Butylbenzene	N/A	400 U	500 U	200 U	200 U	40 U	100 U	2.0 U	20 U	80 U	4.0 U	40 U	10 U	10 U	10 U	5.0 U	10 U	2.0 U	2.0 U	2.0 U	NA	2.0 U	NA
	sec-Butylbenzene	N/A	400 U	500 U	200 U	200 U	40 U	100 U	2.0 U	20 U	80 U	4.0 U	40 U	10 U	10 U	10 U	5.0 U	10 U	2.0 U	2.0 U	2.0 U	NA	2.0 U	NA
	tert-Butylbenzene	N/A	400 U	500 U	200 U	200 U	40 U	100 U	2.0 U	20 U	80 U	4.0 U	40 U	10 U	10 U	10 U	5.0 U	10 U	2.0 U	2.0 U	2.0 U	NA	2.0 U	NA
	o-Chlorotoluene	N/A	400 U	500 U	200 U	200 U	40 U	100 U	2.0 U	20 U	80 U	4.0 U	40 U	10 U	10 U	10 U	5.0 U	10 U	2.0 U	2.0 U	2.0 U	NA	2.0 U	NA
	p-Chlorotoluene	N/A	400 U	500 U	200 U	200 U	40 U	100 U	2.0 U	20 U	80 U	4.0 U	40 U	10 U	10 U	10 U	5.0 U	10 U	2.0 U	2.0 U	2.0 U	NA	2.0 U	NA
	1,2-Dibromo-3-chloropropane	N/A	400 U	500 U	200 U	200 U	40 U	100 U	2.0 U	20 U	80 U	4.0 U	40 U	10 U	10 U	10 U	5.0 U	10 U	2.0 U	2.0 U	2.0 U	NA	2.0 U	NA
	Hexachlorobutadiene	N/A	120 U	150 U	60 U	60 U	12 U	30 U	0.60 U	6.0 U	24 U	1.2 U	12 U	3.0 U	3.0 U	3.0 U	1.5 U	3.0 U	0.60 U	0.60 U	0.60 U	NA	0.60 U	NA
	Isopropylbenzene	N/A	400 U	500 U	200 U	200 U	40 U	100 U	2.0 U	20 U	80 U	4.0 U	40 U	10 U	10 U	10 U	5.0 U	10 U	2.0 U	2.0 U	2.0 U	NA	2.0 U	NA
	p-Isopropyltoluene	N/A	400 U	500 U	200 U	200 U	40 U	100 U	2.0 U	20 U	80 U	4.0 U	40 U	10 U	10 U	10 U	5.0 U	10 U	2.0 U	2.0 U	2.0 U	NA	2.0 U	NA
	Naphthalene	N/A	400 U	500 U	200 U	200 U	40 U	100 U	2.0 U	20 U	80 U	4.0 U	40 U	10 U	10 U	10 U	5.0 U	10 U	2.0 U	2.0 U	2.0 U	NA	2.0 U	NA
	n-Propylbenzene	N/A	400 U	500 U	200 U	200 U	40 U	100 U	2.0 U	20 U	80 U	4.0 U	40 U	10 U	10 U	10 U	5.0 U	10 U	2.0 U	2.0 U	2.0 U	NA	2.0 U	NA
	1,2,3-Trichlorobenzene	N/A	400 U	500 U	200 U	200 U	40 U	100 U	**9.7**	20 U	80 U	4.0 U	40 U	10 U	10 U	10 U	5.0 U	10 U	2.0 U	2.0 U	2.0 U	NA	2.0 U	NA
	1,2,4-Trichlorobenzene	N/A	400 U	500 U	200 U	200 U	**73**	100 U	**46**	20 U	80 U	**23**	40 U	10 U	10 U	**11**	5.0 U	10 U	**3.2**	**5.8**	**3.0**	NA	2.0 U	NA
	1,3,5-Trimethylbenzene	N/A	400 U	500 U	200 U	200 U	40 U	100 U	2.0 U	20 U	80 U	4.0 U	40 U	10 U	10 U	10 U	5.0 U	10 U	2.0 U	2.0 U	2.0 U	NA	2.0 U	NA
	1,2,4-Trimethylbenzene	N/A	400 U	500 U	200 U	200 U	40 U	100 U	2.0 U	20 U	80 U	4.0 U	40 U	10 U	10 U	10 U	5.0 U	10 U	2.0 U	2.0 U	2.0 U	NA	2.0 U	NA
	Ethyl ether	N/A	400 U	500 U	200 U	200 U	40 U	100 U	2.0 U	20 U	80 U	4.0 U	40 U	10 U	10 U	10 U	5.0 U	10 U	2.0 U	2.0 U	2.0 U	NA	2.0 U	NA
	Isopropyl Ether	N/A	400 U	500 U	200 U	200 U	40 U	100 U	2.0 U	20 U	80 U	4.0 U	40 U	10 U	10 U	10 U	5.0 U	10 U	2.0 U	2.0 U	2.0 U	NA	2.0 U	NA
	Ethyl-Tert-Butyl-Ether	N/A	400 U	500 U	200 U	200 U	40 U	100 U	2.0 U	20 U	80 U	4.0 U	40 U	10 U	10 U	10 U	5.0 U	10 U	2.0 U	2.0 U	2.0 U	NA	2.0 U	NA
	Tertiary-Amyl Methyl Ether	N/A	400 U	500 U	200 U	200 U	40 U	100 U	2.0 U	20 U	80 U	4.0 U	40 U	10 U	10 U	10 U	5.0 U	10 U	2.0 U	2.0 U	2.0 U	NA	2.0 U	NA
	1,4-Dioxane	N/A	50,000 U	62,000 U	25,000 U	25,000 U	5,000 U	12,000 U	250 U	2,500 U	10,000 U	500 U	5,000 U	1,200 U	1,200 U	1,200 U	620 U	1,200 U	250 U	250 U	250 U	NA	250 U	NA
VOCs - TICs																								
(ug/L)	Sulfur Dioxide	N/A	NA	NA	NA	NA	NA	NA	**4.9 NJ**	NA	NA	NA	NA	NA	NA	NA	NA	NA	NA	NA	NA	NA	NA	NA
	Unknown aldehyde	N/A	NA	NA	NA	NA	NA	NA	**1.3 J**	NA	NA	NA	NA	NA	NA	NA	NA	NA	NA	NA	NA	NA	NA	NA
	Unknown Substituted Alkanes	N/A	NA	NA	NA	NA	NA	NA	**3.2 J**	NA	NA	NA	NA	NA	NA	NA	NA	NA	NA	NA	NA	NA	NA	NA
	Unknown Substituted Alkenes	N/A	NA	NA	NA	NA	NA	NA	**22 J**	NA	NA	NA	NA	NA	NA	NA	NA	NA	NA	NA	NA	NA	NA	NA
	Unknown	N/A	NA	NA	NA	NA	NA	NA	**2.1 J**	NA	NA	NA	NA	NA	NA	NA	NA	NA	NA	NA	NA	NA	NA	NA
PCBs																								
(ug/L)	Aroclor 1016	N/A	250 U	5.00 U	500 U	25.2 U	5.05 U	5.00 U	9.95 U	5.00 U	0.500 U	5.00 U	1.25 U	2.50 U	2.50 U	1.25 U	5.00 U	6.25 U	5.00 U	5.00 U	2.50 U	0.667 U	1.25 U	0.250 U
	Aroclor 1221	N/A	250 U	5.00 U	500 U	25.2 U	5.05 U	5.00 U	9.95 U	5.00 U	0.500 U	5.00 U	1.25 U	2.50 U	2.50 U	1.25 U	5.00 U	6.25 U	5.00 U	5.00 U	2.50 U	0.667 U	1.25 U	0.250 U
	Aroclor 1232	N/A	250 U	5.00 U	500 U	25.2 U	5.05 U	5.00 U	9.95 U	5.00 U	0.500 U	5.00 U	1.25 U	2.50 U	2.50 U	1.25 U	5.00 U	6.25 U	5.00 U	5.00 U	2.50 U	0.667 U	1.25 U	0.250 U
	Aroclor 1242	N/A	250 U	5.00 U	500 U	25.2 U	5.05 U	5.00 U	9.95 U	5.00 U	0.500 U	5.00 U	1.25 U	2.50 U	2.50 U	1.25 U	5.00 U	6.25 U	5.00 U	5.00 U	2.50 U	0.667 U	1.25 U	0.250 U
	Aroclor 1248	N/A	250 U	5.00 U	500 U	25.2 U	5.05 U	5.00 U	9.95 U	5.00 U	0.500 U	5.00 U	1.25 U	2.50 U	2.50 U	1.25 U	5.00 U	6.25 U	5.00 U	5.00 U	2.50 U	0.667 U	1.25 U	0.250 U
	Aroclor 1254	N/A	**5,120**	**75.9**	**6,800**	**683**	**178**	**112**	**238**	5.00 U	**11.0**	**105**	**15.7**	**36.9**	**45.9**	**18.5**	**151**	**60.7**	**102**	**151**	**55.5**	**16.1**	**22.4**	0.250 U
	Aroclor 1260	N/A	250 U	5.00 U	500 U	25.2 U	5.05 U	5.00 U	9.95 U	**37.3**	0.500 U	5.00 U	1.25 U	2.50 U	2.50 U	1.25 U	5.00 U	6.25 U	5.00 U	5.00 U	2.50 U	0.667 U	1.25 U	0.250 U
	Aroclor 1262	N/A	250 U	5.00 U	500 U	25.2 U	5.05 U	5.00 U	9.95 U	5.00 U	0.500 U	5.00 U	1.25 U	2.50 U	2.50 U	1.25 U	5.00 U	6.25 U	5.00 U	5.00 U	2.50 U	0.667 U	1.25 U	0.250 U
	Aroclor 1268	N/A	250 U	5.00 U	500 U	25.2 U	5.05 U	5.00 U	9.95 U	5.00 U	0.500 U	5.00 U	1.25 U	2.50 U	2.50 U	1.25 U	5.00 U	6.25 U	5.00 U	5.00 U	2.50 U	0.667 U	1.25 U	0.250 U
	Total PCBs	5	**5,120**	**75.9**	**6,800**	**683**	**178**	**112**	**238**	**37.3**	**11.0**	**105**	**15.7**	**36.9**	**45.9**	**18.5**	**151**	**60.7**	**102**	**151**	**55.5**	**16.1**	**22.4**	0.250 U
Total Petroleum Hydrocarbons																								
(ug/L)	TPH	N/A	NA	NA	NA	NA	NA	NA	NA	NA	NA	NA	NA	NA	NA	NA	NA	NA	NA	NA	500 U	714 U	200 U	200 U

Notes:
ug/L - micrograms per liter.
NJ - Presumptive evidence of compound.
J - Estimated value.
NA - Sample not analyzed for the listed analyte.
N/A - Not applicable.
U - Compound was not detected at specified quantitation limit.
Values in **Bold** indicate the compound was detected.
VOCs - Volatile Organic Compounds.
PCBs - Polychlorinated Biphenyls.
TICs - Tentatively identified compounds.
* - City of New Bedford Industrial Discharge Permit number S-123.
^ - 0.45 micron filtration done in field; 0.20 and 2.0 micron filtration performed in lab.

Table 5
Summary of Hydraulic Control System Results for Water Samples
2012 through 2015
New Bedford High School
New Bedford, Massachusetts

Analysis	Analyte	Sample Port:	SP-1																	
		Sample ID:	INFLUENT	INFLUENT (FILTERED)	INFLUENT	INFLUENT (FILTERED)	INFLUENT	INFLUENT (FILTERED)	INFLUENT	INFLUENT (FILTERED)	INFLUENT	INFLUENT (FILTERED)	INFLUENT	INFLUENT (FILTERED)	INFLUENT	INFLUENT (FILTERED)	INFLUENT	INFLUENT (FILTERED)	INFLUENT	INFLUENT (FILTERED)
		Filter Size (micron)^	N/A	0.20	N/A	0.20	N/A	0.20	N/A	0.20	N/A	0.20	N/A	0.20	N/A	0.20	N/A	0.20	N/A	0.20
		Sample Date:	7/30/2013	7/30/2013	8/20/2013	8/20/2013	9/16/2013	9/16/2013	10/15/2013	10/15/2013	11/15/2013	11/15/2013	12/17/2013	12/17/2013	1/16/2014	1/16/2014	2/14/2014	2/14/2014	3/17/2014	3/17/2014
		Limits*																		
VOCs																				
(ug/L)	Methylene chloride	N/A	2.0 U	NA	2.0 U	NA	2.0 U	NA	2.0 U	NA	2.0 U	NA	4.0 U	NA	2.0 U	NA	2.0 U	NA	2.0 U	NA
	1,1-Dichloroethane	N/A	1.0 U	NA	1.0 U	NA	1.0 U	NA	1.0 U	NA	1.0 U	NA	2.0 U	NA	1.0 U	NA	1.0 U	NA	1.0 U	NA
	Chloroform	N/A	1.0 U	NA	1.0 U	NA	1.0 U	NA	1.0 U	NA	1.0 U	NA	2.0 U	NA	1.0 U	NA	1.0 U	NA	1.0 U	NA
	Carbon tetrachloride	N/A	1.0 U	NA	1.0 U	NA	1.0 U	NA	1.0 U	NA	1.0 U	NA	2.0 U	NA	1.0 U	NA	1.0 U	NA	1.0 U	NA
	1,2-Dichloropropane	N/A	1.0 U	NA	1.0 U	NA	1.0 U	NA	1.0 U	NA	1.0 U	NA	2.0 U	NA	1.0 U	NA	1.0 U	NA	1.0 U	NA
	Dibromochloromethane	N/A	1.0 U	NA	1.0 U	NA	1.0 U	NA	1.0 U	NA	1.0 U	NA	2.0 U	NA	1.0 U	NA	1.0 U	NA	1.0 U	NA
	1,1,2-Trichloroethane	N/A	1.0 U	NA	1.0 U	NA	1.0 U	NA	1.0 U	NA	1.0 U	NA	2.0 U	NA	1.0 U	NA	1.0 U	NA	1.0 U	NA
	Tetrachloroethene	N/A	1.0 U	NA	1.0 U	NA	1.0 U	NA	1.0 U	NA	1.0 U	NA	2.0 U	NA	1.0 U	NA	1.0 U	NA	1.0 U	NA
	Chlorobenzene	N/A	1.0 U	NA	1.0 U	NA	1.0 U	NA	1.0 U	NA	1.0 U	NA	2.0 U	NA	1.0 U	NA	1.0 U	NA	1.0 U	NA
	Trichlorofluoromethane	N/A	2.0 U	NA	2.0 U	NA	2.0 U	NA	2.0 U	NA	2.0 U	NA	4.0 U	NA	2.0 U	NA	2.0 U	NA	2.0 U	NA
	1,2-Dichloroethane	N/A	1.0 U	NA	1.0 U	NA	1.0 U	NA	1.0 U	NA	1.0 U	NA	2.0 U	NA	1.0 U	NA	1.0 U	NA	1.0 U	NA
	1,1,1-Trichloroethane	N/A	1.0 U	NA	1.0 U	NA	1.0 U	NA	1.0 U	NA	1.0 U	NA	2.0 U	NA	1.0 U	NA	1.0 U	NA	1.0 U	NA
	Bromodichloromethane	N/A	1.0 U	NA	1.0 U	NA	1.0 U	NA	1.0 U	NA	1.0 U	NA	2.0 U	NA	1.0 U	NA	1.0 U	NA	1.0 U	NA
	trans-1,3-Dichloropropene	N/A	0.50 U	NA	0.50 U	NA	0.50 U	NA	0.50 U	NA	0.50 U	NA	1.0 U	NA	0.50 U	NA	0.50 U	NA	0.50 U	NA
	cis-1,3-Dichloropropene	N/A	0.50 U	NA	0.50 U	NA	0.50 U	NA	0.50 U	NA	0.50 U	NA	1.0 U	NA	0.50 U	NA	0.50 U	NA	0.50 U	NA
	1,3-Dichloropropene, Total	N/A	NA	NA	NA	NA	NA	NA	NA	NA	NA	NA	NA	NA	NA	NA	NA	NA	NA	NA
	1,1-Dichloropropene	N/A	2.0 U	NA	2.0 U	NA	2.0 U	NA	2.0 U	NA	2.0 U	NA	4.0 U	NA	2.0 U	NA	2.0 U	NA	2.0 U	NA
	Bromoform	N/A	2.0 U	NA	2.0 U	NA	2.0 U	NA	2.0 U	NA	2.0 U	NA	4.0 U	NA	2.0 U	NA	2.0 U	NA	2.0 U	NA
	1,1,2,2-Tetrachloroethane	N/A	1.0 U	NA	1.0 U	NA	1.0 U	NA	1.0 U	NA	1.0 U	NA	2.0 U	NA	1.0 U	NA	1.0 U	NA	1.0 U	NA
	Benzene	N/A	0.50 U	NA	0.50 U	NA	0.50 U	NA	0.50 U	NA	0.50 U	NA	1.0 U	NA	0.50 U	NA	0.50 U	NA	0.50 U	NA
	Toluene	N/A	1.0 U	NA	1.0 U	NA	**1.1**	NA	1.0 U	NA	1.0 U	NA	**25**	NA	**1.4**	NA	**1.6**	NA	1.0 U	NA
	Ethylbenzene	N/A	1.0 U	NA	1.0 U	NA	1.0 U	NA	1.0 U	NA	1.0 U	NA	2.0 U	NA	1.0 U	NA	1.0 U	NA	1.0 U	NA
	Chloromethane	N/A	2.0 U	NA	2.0 U	NA	2.0 U	NA	2.0 U	NA	2.0 U	NA	4.0 U	NA	2.0 U	NA	2.0 U	NA	2.0 U	NA
	Bromomethane	N/A	2.0 U	NA	2.0 U	NA	2.0 U	NA	2.0 U	NA	2.0 U	NA	4.0 U	NA	2.0 U	NA	2.0 U	NA	2.0 U	NA
	Vinyl chloride	N/A	**9.1**	NA	**6.0**	NA	**11.0**	NA	**8.2**	NA	**8.1**	NA	**25**	NA	**26**	NA	1.0 U	NA	**6.8**	NA
	Chloroethane	N/A	2.0 U	NA	2.0 U	NA	2.0 U	NA	2.0 U	NA	2.0 U	NA	4.0 U	NA	2.0 U	NA	2.0 U	NA	2.0 U	NA
	1,1-Dichloroethene	N/A	1.0 U	NA	1.0 U	NA	1.0 U	NA	1.0 U	NA	1.0 U	NA	2.0 U	NA	1.0 U	NA	1.0 U	NA	1.0 U	NA
	trans-1,2-Dichloroethene	N/A	**17**	NA	**13**	NA	**23**	NA	**18**	NA	**17**	NA	**31**	NA	**12**	NA	1.0 U	NA	**11**	NA
	Trichloroethene	N/A	**6.6**	NA	**3.5**	NA	**4.5**	NA	**3.3**	NA	**5.7**	NA	**3.5**	NA	**1.9**	NA	1.0 U	NA	**5.3**	NA
	1,2-Dichlorobenzene	N/A	1.0 U	NA	1.0 U	NA	1.0 U	NA	1.0 U	NA	1.0 U	NA	2.0 U	NA	1.0 U	NA	1.0 U	NA	1.0 U	NA
	1,3-Dichlorobenzene	N/A	**2.3**	NA	**1.8**	NA	**1.8**	NA	**1.6**	NA	**1.7**	NA	2.0 U	NA	**1.7**	NA	**1.8**	NA	**1.1**	NA
	1,4-Dichlorobenzene	N/A	**7.5**	NA	**5.6**	NA	**5.1**	NA	**4.6**	NA	**4.8**	NA	**5.5**	NA	**6.5**	NA	**6.6**	NA	**3.8**	NA
	Methyl tert butyl ether	N/A	2.0 U	NA	2.0 U	NA	2.0 U	NA	2.0 U	NA	2.0 U	NA	4.0 U	NA	2.0 U	NA	2.0 U	NA	2.0 U	NA
	p/m-Xylene	N/A	2.0 U	NA	2.0 U	NA	2.0 U	NA	2.0 U	NA	2.0 U	NA	4.0 U	NA	2.0 U	NA	2.0 U	NA	2.0 U	NA
	o-Xylene	N/A	1.0 U	NA	1.0 U	NA	1.0 U	NA	1.0 U	NA	1.0 U	NA	2.0 U	NA	1.0 U	NA	1.0 U	NA	1.0 U	NA
	Xylene (Total)	N/A	NA	NA	NA	NA	NA	NA	NA	NA	NA	NA	NA	NA	NA	NA	NA	NA	NA	NA
	cis-1,2-Dichloroethene	N/A	**54**	NA	**51**	NA	**87**	NA	**71**	NA	**82**	NA	**110**	NA	**28**	NA	**1.7**	NA	**39**	NA
	1,2-Dichloroethene (total)	N/A	NA	NA	NA	NA	NA	NA	NA	NA	NA	NA	NA	NA	NA	NA	NA	NA	NA	NA
	Dibromomethane	N/A	2.0 U	NA	2.0 U	NA	2.0 U	NA	2.0 U	NA	2.0 U	NA	4.0 U	NA	2.0 U	NA	2.0 U	NA	2.0 U	NA
	1,2,3-Trichloropropane	N/A	2.0 U	NA	2.0 U	NA	2.0 U	NA	2.0 U	NA	2.0 U	NA	4.0 U	NA	2.0 U	NA	2.0 U	NA	2.0 U	NA
	Styrene	N/A	1.0 U	NA	1.0 U	NA	1.0 U	NA	1.0 U	NA	1.0 U	NA	2.0 U	NA	1.0 U	NA	1.0 U	NA	1.0 U	NA
	Dichlorodifluoromethane	N/A	2.0 U	NA	2.0 U	NA	2.0 U	NA	2.0 U	NA	2.0 U	NA	4.0 U	NA	2.0 U	NA	2.0 U	NA	2.0 U	NA
	Acetone	N/A	5.0 U	NA	5.0 U	NA	5.0 U	NA	5.0 U	NA	5.0 U	NA	10 U	NA	5.0 U	NA	5.0 U	NA	5.0 U	NA
	Carbon disulfide	N/A	2.0 U	NA	2.0 U	NA	2.0 U	NA	2.0 U	NA	2.0 U	NA	4.0 U	NA	2.0 U	NA	2.0 U	NA	2.0 U	NA
	2-Butanone	N/A	5.0 U	NA	5.0 U	NA	5.0 U	NA	5.0 U	NA	5.0 U	NA	10 U	NA	5.0 U	NA	5.0 U	NA	5.0 U	NA

Table 5
Summary of Hydraulic Control System Results for Water Samples
2012 through 2015
New Bedford High School
New Bedford, Massachusetts

Analysis	Analyte	Sample Port:	SP-1																	
		Sample ID:	INFLUENT	INFLUENT (FILTERED)	INFLUENT	INFLUENT (FILTERED)	INFLUENT	INFLUENT (FILTERED)	INFLUENT	INFLUENT (FILTERED)	INFLUENT	INFLUENT (FILTERED)	INFLUENT	INFLUENT (FILTERED)	INFLUENT	INFLUENT (FILTERED)	INFLUENT	INFLUENT (FILTERED)	INFLUENT	INFLUENT (FILTERED)
		Filter Size (micron)^	N/A	0.20	N/A	0.20	N/A	0.20	N/A	0.20	N/A	0.20	N/A	0.20	N/A	0.20	N/A	0.20	N/A	0.20
		Sample Date:	7/30/2013	7/30/2013	8/20/2013	8/20/2013	9/16/2013	9/16/2013	10/15/2013	10/15/2013	11/15/2013	11/15/2013	12/17/2013	12/17/2013	1/16/2014	1/16/2014	2/14/2014	2/14/2014	3/17/2014	3/17/2014
		Limits*																		
	4-Methyl-2-pentanone	N/A	5.0 U	NA	5.0 U	NA	5.0 U	NA	5.0 U	NA	5.0 U	NA	10 U	NA	5.0 U	NA	5.0 U	NA	5.0 U	NA
	2-Hexanone	N/A	5.0 U	NA	5.0 U	NA	5.0 U	NA	5.0 U	NA	5.0 U	NA	10 U	NA	5.0 U	NA	5.0 U	NA	5.0 U	NA
	Bromochloromethane	N/A	2.0 U	NA	2.0 U	NA	2.0 U	NA	2.0 U	NA	2.0 U	NA	4.0 U	NA	2.0 U	NA	2.0 U	NA	2.0 U	NA
	Tetrahydrofuran	N/A	2.0 U	NA	2.0 U	NA	2.0 U	NA	2.0 U	NA	2.0 U	NA	4.0 U	NA	2.0 U	NA	2.0 U	NA	2.0 U	NA
	2,2-Dichloropropane	N/A	2.0 U	NA	2.0 U	NA	2.0 U	NA	2.0 U	NA	2.0 U	NA	4.0 U	NA	2.0 U	NA	2.0 U	NA	2.0 U	NA
	1,2-Dibromoethane	N/A	2.0 U	NA	2.0 U	NA	2.0 U	NA	2.0 U	NA	2.0 U	NA	4.0 U	NA	2.0 U	NA	2.0 U	NA	2.0 U	NA
	1,3-Dichloropropane	N/A	2.0 U	NA	2.0 U	NA	2.0 U	NA	2.0 U	NA	2.0 U	NA	4.0 U	NA	2.0 U	NA	2.0 U	NA	2.0 U	NA
	1,1,1,2-Tetrachloroethane	N/A	1.0 U	NA	1.0 U	NA	1.0 U	NA	1.0 U	NA	1.0 U	NA	2.0 U	NA	1.0 U	NA	1.0 U	NA	1.0 U	NA
	Bromobenzene	N/A	2.0 U	NA	2.0 U	NA	2.0 U	NA	2.0 U	NA	2.0 U	NA	4.0 U	NA	2.0 U	NA	2.0 U	NA	2.0 U	NA
	n-Butylbenzene	N/A	2.0 U	NA	2.0 U	NA	2.0 U	NA	2.0 U	NA	2.0 U	NA	4.0 U	NA	2.0 U	NA	2.0 U	NA	2.0 U	NA
	sec-Butylbenzene	N/A	2.0 U	NA	2.0 U	NA	2.0 U	NA	2.0 U	NA	2.0 U	NA	4.0 U	NA	2.0 U	NA	2.0 U	NA	2.0 U	NA
	tert-Butylbenzene	N/A	2.0 U	NA	2.0 U	NA	2.0 U	NA	2.0 U	NA	2.0 U	NA	4.0 U	NA	2.0 U	NA	2.0 U	NA	2.0 U	NA
	o-Chlorotoluene	N/A	2.0 U	NA	2.0 U	NA	2.0 U	NA	2.0 U	NA	2.0 U	NA	4.0 U	NA	2.0 U	NA	2.0 U	NA	2.0 U	NA
	p-Chlorotoluene	N/A	2.0 U	NA	2.0 U	NA	2.0 U	NA	2.0 U	NA	2.0 U	NA	4.0 U	NA	2.0 U	NA	2.0 U	NA	2.0 U	NA
	1,2-Dibromo-3-chloropropane	N/A	2.0 U	NA	2.0 U	NA	2.0 U	NA	2.0 U	NA	2.0 U	NA	4.0 U	NA	2.0 U	NA	2.0 U	NA	2.0 U	NA
	Hexachlorobutadiene	N/A	0.60 U	NA	0.60 U	NA	0.60 U	NA	0.60 U	NA	0.60 U	NA	1.2 U	NA	0.60 U	NA	0.60 U	NA	0.60 U	NA
	Isopropylbenzene	N/A	2.0 U	NA	2.0 U	NA	2.0 U	NA	2.0 U	NA	2.0 U	NA	4.0 U	NA	2.0 U	NA	2.0 U	NA	2.0 U	NA
	p-Isopropyltoluene	N/A	2.0 U	NA	2.0 U	NA	2.0 U	NA	2.0 U	NA	2.0 U	NA	4.0 U	NA	2.0 U	NA	2.0 U	NA	2.0 U	NA
	Naphthalene	N/A	2.0 U	NA	2.0 U	NA	2.0 U	NA	2.0 U	NA	2.0 U	NA	4.0 U	NA	2.0 U	NA	2.0 U	NA	2.0 U	NA
	n-Propylbenzene	N/A	2.0 U	NA	2.0 U	NA	2.0 U	NA	2.0 U	NA	2.0 U	NA	4.0 U	NA	2.0 U	NA	2.0 U	NA	2.0 U	NA
	1,2,3-Trichlorobenzene	N/A	2.0 U	NA	2.0 U	NA	2.0 U	NA	2.0 U	NA	2.0 U	NA	4.0 U	NA	2.0 U	NA	2.0 U	NA	2.0 U	NA
	1,2,4-Trichlorobenzene	N/A	**5.8**	NA	**5.0**	NA	**4.8**	NA	**4.8**	NA	**4.5**	NA	4.0 U	NA	**4.5**	NA	**5.0**	NA	**3.0**	NA
	1,3,5-Trimethylbenzene	N/A	2.0 U	NA	2.0 U	NA	2.0 U	NA	2.0 U	NA	2.0 U	NA	4.0 U	NA	2.0 U	NA	2.0 U	NA	2.0 U	NA
	1,2,4-Trimethylbenzene	N/A	2.0 U	NA	2.0 U	NA	2.0 U	NA	2.0 U	NA	2.0 U	NA	4.0 U	NA	2.0 U	NA	2.0 U	NA	2.0 U	NA
	Ethyl ether	N/A	2.0 U	NA	2.0 U	NA	2.0 U	NA	2.0 U	NA	2.0 U	NA	4.0 U	NA	2.0 U	NA	2.0 U	NA	2.0 U	NA
	Isopropyl Ether	N/A	2.0 U	NA	2.0 U	NA	2.0 U	NA	2.0 U	NA	2.0 U	NA	4.0 U	NA	2.0 U	NA	2.0 U	NA	2.0 U	NA
	Ethyl-Tert-Butyl-Ether	N/A	2.0 U	NA	2.0 U	NA	2.0 U	NA	2.0 U	NA	2.0 U	NA	4.0 U	NA	2.0 U	NA	2.0 U	NA	2.0 U	NA
	Tertiary-Amyl Methyl Ether	N/A	2.0 U	NA	2.0 U	NA	2.0 U	NA	2.0 U	NA	2.0 U	NA	4.0 U	NA	2.0 U	NA	2.0 U	NA	2.0 U	NA
	1,4-Dioxane	N/A	250 U	NA	250 U	NA	250 U	NA	250 U	NA	250 U	NA	500 U	NA	250 U	NA	250 U	NA	250 U	NA
VOCs - TICs																				
(ug/L)	Sulfur Dioxide	N/A	NA	NA	NA	NA	NA	NA	NA	NA	NA	NA	NA	NA	NA	NA	NA	NA	NA	NA
	Unknown aldehyde	N/A	NA	NA	NA	NA	NA	NA	NA	NA	NA	NA	NA	NA	NA	NA	NA	NA	NA	NA
	Unknown Substituted Alkanes	N/A	NA	NA	NA	NA	NA	NA	NA	NA	NA	NA	NA	NA	NA	NA	NA	NA	NA	NA
	Unknown Substituted Alkenes	N/A	NA	NA	NA	NA	NA	NA	NA	NA	NA	NA	NA	NA	NA	NA	NA	NA	NA	NA
	Unknown	N/A	NA	NA	NA	NA	NA	NA	NA	NA	NA	NA	NA	NA	NA	NA	NA	NA	NA	NA
PCBs																				
(ug/L)	Aroclor 1016	N/A	1.25 U	0.250 U	5.00 U	0.250 U	1.25 U	0.500 U	1.25 U	1.00 U	2.50 U	0.250 U	1.25 U	0.250 U	1.25 U	0.250 U	2.50 U	0.250 U	2.50 U	0.260 U
	Aroclor 1221	N/A	1.25 U	0.250 U	5.00 U	0.250 U	1.25 U	0.500 U	1.25 U	1.00 U	2.50 U	0.250 U	1.25 U	0.250 U	1.25 U	0.250 U	2.50 U	0.250 U	2.50 U	0.260 U
	Aroclor 1232	N/A	1.25 U	0.250 U	5.00 U	0.250 U	1.25 U	0.500 U	1.25 U	1.00 U	2.50 U	0.250 U	1.25 U	0.250 U	1.25 U	0.250 U	2.50 U	0.250 U	2.50 U	0.260 U
	Aroclor 1242	N/A	1.25 U	0.250 U	**15.3**	0.250 U	1.25 U	0.500 U	1.25 U	1.00 U	2.50 U	0.250 U	1.25 U	0.250 U	1.25 U	0.250 U	2.50 U	0.250 U	**6.52**	0.260 U
	Aroclor 1248	N/A	1.25 U	0.250 U	5.00 U	0.250 U	1.25 U	0.500 U	1.25 U	1.00 U	2.50 U	0.250 U	1.25 U	0.250 U	1.25 U	0.250 U	2.50 U	0.250 U	2.50 U	0.260 U
	Aroclor 1254	N/A	**13.6**	0.250 U	**179**	**5.84**	**21.8**	**7.59**	**40.5**	**10.9**	**88.5**	**1.45**	**25.5**	0.250 U	**28.2**	0.250 U	**57.5**	0.250 U	**30.7**	0.260 U
	Aroclor 1260	N/A	1.25 U	0.250 U	5.00 U	0.250 U	1.25 U	0.500 U	1.25 U	1.00 U	2.50 U	0.250 U	1.25 U	0.250 U	1.25 U	0.250 U	2.50 U	0.250 U	2.50 U	0.260 U
	Aroclor 1262	N/A	1.25 U	0.250 U	5.00 U	0.250 U	1.25 U	0.500 U	1.25 U	1.00 U	2.50 U	0.250 U	1.25 U	0.250 U	1.25 U	0.250 U	2.50 U	0.250 U	2.50 U	0.260 U
	Aroclor 1268	N/A	1.25 U	0.250 U	5.00 U	0.250 U	1.25 U	0.500 U	1.25 U	1.00 U	2.50 U	0.250 U	1.25 U	0.250 U	1.25 U	0.250 U	2.50 U	0.250 U	2.50 U	0.260 U
	Total PCBs	5	**13.6**	0.250 U	**194.3**	**5.84**	**21.8**	**7.59**	**40.5**	**10.9**	**88.5**	**1.45**	**25.5**	0.250 U	**28.2**	0.250 U	**57.5**	0.250 U	**37.22**	0.260 U
Total Petroleum Hydrocarbons																				
(ug/L)	TPH	N/A	200 U	200 U	200 U	200 U	200 U	200 U	200 U	200 U	**464**	200 U	**226**	200 U	200 U	NA	**245**	200 U	NA	NA

Notes:
ug/L - micrograms per liter.
NJ - Presumptive evidence of compound.
J - Estimated value.
NA - Sample not analyzed for the listed analyte.
N/A - Not applicable.
U - Compound was not detected at specified quantitation limit.
Values in **Bold** indicate the compound was detected.
VOCs - Volatile Organic Compounds.
PCBs - Polychlorinated Biphenyls.
TICs - Tentatively identified compounds.
* - City of New Bedford Industrial Discharge Permit number S-123.
^ - 0.45 micron filtration done in field; 0.20 and 2.0 micron filtration performed in la

Table 5
Summary of Hydraulic Control System Results for Water Samples
2012 through 2015
New Bedford High School
New Bedford, Massachusetts

Analysis	Analyte	Sample Port:	SP-1																			
		Sample ID:	INFLUENT	INFLUENT	INFLUENT	INFLUENT	INFLUENT	INFLUENT	INFLUENT	INFLUENT	INFLUENT	INFLUENT	INFLUENT	INFLUENT	INFLUENT	INFLUENT	INFLUENT	INFLUENT	INFLUENT	INFLUENT	INFLUENT	INFLUENT
		Filter Size (micron)^	N/A	N/A	N/A	N/A	N/A	N/A	N/A	N/A	N/A	N/A	N/A	N/A	N/A	N/A	N/A	N/A	N/A	N/A	N/A	N/A
		Sample Date:	4/21/2014	5/19/2014	6/17/2014	7/15/2014	8/14/2014	9/10/2014	10/15/2014	11/14/2014	12/10/2014	1/14/2015	2/17/2015	3/16/2015	4/13/2015	5/14/2015	6/4/2015	7/30/2015	8/14/2015	9/14/2015	10/13/2015
		Limits*																				
VOCs																						
(ug/L)	Methylene chloride	N/A	2.0 U	2.0 U	2.0 U	2.0 U	2.0 U	2.0 U	2.0 U	2.0 U	2.0 U	2.0 U	2.0 U	2.0 U	2.0 U	2.0 U	2.0 U	2.0 U	2.0 U	2.0 U	2.0 U	2.0 U
	1,1-Dichloroethane	N/A	1.0 U	1.0 U	1.0 U	1.0 U	1.0 U	1.0 U	1.0 U	1.0 U	1.0 U	1.0 U	1.0 U	1.0 U	1.0 U	1.0 U	1.0 U	1.0 U	1.0 U	1.0 U	1.0 U	1.0 U
	Chloroform	N/A	1.0 U	1.0 U	1.0 U	1.0 U	1.0 U	1.0 U	1.0 U	1.0 U	1.0 U	1.0 U	1.0 U	1.0 U	1.0 U	1.0 U	1.0 U	1.0 U	1.0 U	1.0 U	1.0 U	1.0 U
	Carbon tetrachloride	N/A	1.0 U	1.0 U	1.0 U	1.0 U	1.0 U	1.0 U	1.0 U	1.0 U	1.0 U	1.0 U	1.0 U	1.0 U	1.0 U	1.0 U	1.0 U	1.0 U	1.0 U	1.0 U	1.0 U	1.0 U
	1,2-Dichloropropane	N/A	1.0 U	1.0 U	1.0 U	1.0 U	1.0 U	1.0 U	1.0 U	1.0 U	1.0 U	1.0 U	1.0 U	1.0 U	1.0 U	1.0 U	1.0 U	1.0 U	1.0 U	1.0 U	1.0 U	1.0 U
	Dibromochloromethane	N/A	1.0 U	1.0 U	1.0 U	1.0 U	1.0 U	1.0 U	1.0 U	1.0 U	1.0 U	1.0 U	1.0 U	1.0 U	1.0 U	1.0 U	1.0 U	1.0 U	1.0 U	1.0 U	1.0 U	1.0 U
	1,1,2-Trichloroethane	N/A	1.0 U	1.0 U	1.0 U	1.0 U	1.0 U	1.0 U	1.0 U	1.0 U	1.0 U	1.0 U	1.0 U	1.0 U	1.0 U	1.0 U	1.0 U	1.0 U	1.0 U	1.0 U	1.0 U	1.0 U
	Tetrachloroethene	N/A	1.0 U	1.0 U	1.0 U	1.0 U	1.0 U	1.0 U	1.0 U	1.0 U	1.0 U	1.0 U	1.0 U	1.0 U	1.0 U	1.0 U	1.0 U	1.0 U	1.0 U	1.0 U	1.0 U	1.0 U
	Chlorobenzene	N/A	1.0 U	1.0 U	1.0 U	1.0 U	1.0 U	1.0 U	1.0 U	1.0 U	1.0 U	1.0 U	1.0 U	1.0 U	1.0 U	1.0 U	1.0 U	1.0 U	1.0 U	1.0 U	1.0 U	1.0 U
	Trichlorofluoromethane	N/A	2.0 U	2.0 U	2.0 U	2.0 U	2.0 U	2.0 U	2.0 U	2.0 U	2.0 U	2.0 U	2.0 U	2.0 U	2.0 U	2.0 U	2.0 U	2.0 U	2.0 U	2.0 U	2.0 U	2.0 U
	1,2-Dichloroethane	N/A	1.0 U	1.0 U	1.0 U	1.0 U	1.0 U	1.0 U	1.0 U	1.0 U	1.0 U	1.0 U	1.0 U	1.0 U	1.0 U	1.0 U	1.0 U	1.0 U	1.0 U	1.0 U	1.0 U	1.0 U
	1,1,1-Trichloroethane	N/A	1.0 U	1.0 U	1.0 U	1.0 U	1.0 U	1.0 U	1.0 U	1.0 U	1.0 U	1.0 U	1.0 U	1.0 U	1.0 U	1.0 U	1.0 U	1.0 U	1.0 U	1.0 U	1.0 U	1.0 U
	Bromodichloromethane	N/A	1.0 U	1.0 U	1.0 U	1.0 U	1.0 U	1.0 U	1.0 U	1.0 U	1.0 U	1.0 U	1.0 U	1.0 U	1.0 U	1.0 U	1.0 U	1.0 U	1.0 U	1.0 U	1.0 U	1.0 U
	trans-1,3-Dichloropropene	N/A	0.50 U	0.50 U	0.50 U	0.50 U	0.50 U	0.50 U	0.50 U	0.50 U	0.50 U	0.50 U	0.50 U	0.50 U	0.50 U	0.50 U	0.50 U	0.50 U	0.50 U	0.50 U	0.50 U	0.50 U
	cis-1,3-Dichloropropene	N/A	0.50 U	0.50 U	0.50 U	0.50 U	0.50 U	0.50 U	0.50 U	0.50 U	0.50 U	0.50 U	0.50 U	0.50 U	0.50 U	0.50 U	0.50 U	0.50 U	0.50 U	0.50 U	0.50 U	0.50 U
	1,3-Dichloropropene, Total	N/A	NA	0.50 U	0.50 U	0.50 U	0.50 U	0.50 U	0.50 U	0.50 U	0.50 U	0.50 U	0.50 U	0.50 U	0.50 U	0.50 U	0.50 U	0.50 U	0.50 U	0.50 U	0.50 U	0.50 U
	1,1-Dichloropropene	N/A	2.0 U	2.0 U	2.0 U	2.0 U	2.0 U	2.0 U	2.0 U	2.0 U	2.0 U	2.0 U	2.0 U	2.0 U	2.0 U	2.0 U	2.0 U	2.0 U	2.0 U	2.0 U	2.0 U	2.0 U
	Bromoform	N/A	2.0 U	2.0 U	2.0 U	2.0 U	2.0 U	2.0 U	2.0 U	2.0 U	2.0 U	2.0 U	2.0 U	2.0 U	2.0 U	2.0 U	2.0 U	2.0 U	2.0 U	2.0 U	2.0 U	2.0 U
	1,1,2,2-Tetrachloroethane	N/A	1.0 U	1.0 U	1.0 U	1.0 U	1.0 U	1.0 U	1.0 U	1.0 U	1.0 U	1.0 U	1.0 U	1.0 U	1.0 U	1.0 U	1.0 U	1.0 U	1.0 U	1.0 U	1.0 U	1.0 U
	Benzene	N/A	0.50 U	0.50 U	0.50 U	0.50 U	0.50 U	0.50 U	0.50 U	0.50 U	0.50 U	0.50 U	0.50 U	0.50 U	0.50 U	0.50 U	0.50 U	0.50 U	0.50 U	0.50 U	0.50 U	0.50 U
	Toluene	N/A	1.0 U	1.0 U	1.0 U	1.0 U	1.0 U	1.0 U	1.0 U	1.0 U	1.0 U	1.0 U	1.0 U	1.0 U	1.0 U	1.0 U	1.0 U	1.0 U	1.0 U	1.0 U	1.0 U	1.0 U
	Ethylbenzene	N/A	1.0 U	1.0 U	1.0 U	1.0 U	1.0 U	1.0 U	1.0 U	1.0 U	1.0 U	1.0 U	1.0 U	1.0 U	1.0 U	1.0 U	1.0 U	1.0 U	1.0 U	1.0 U	1.0 U	1.0 U
	Chloromethane	N/A	2.0 U	2.0 U	2.0 U	2.0 U	2.0 U	2.0 U	2.0 U	2.0 U	2.0 U	2.0 U	2.0 U	2.0 U	2.0 U	2.0 U	2.0 U	2.0 U	2.0 U	2.0 U	2.0 U	2.0 U
	Bromomethane	N/A	2.0 U	2.0 U	2.0 U	2.0 U	2.0 U	2.0 U	2.0 U	2.0 U	2.0 U	2.0 U	2.0 U	2.0 U	2.0 U	2.0 U	2.0 U	2.0 U	2.0 U	2.0 U	2.0 U	2.0 U
	Vinyl chloride	N/A	**4.1**	**5.0**	**4.0**	**1.0**	**1.0 U**	**5.3**	1.0 U	1.0 U	**8.8**	**6.6**	1.0 U	**2.9**	**2.8**	**7.8**	**13**	**13**	**17**	**9.2**	**5.6**	
	Chloroethane	N/A	2.0 U	2.0 U	2.0 U	2.0 U	2.0 U	2.0 U	2.0 U	2.0 U	2.0 U	2.0 U	2.0 U	2.0 U	2.0 U	2.0 U	2.0 U	2.0 U	2.0 U	2.0 U	2.0 U	2.0 U
	1,1-Dichloroethene	N/A	1.0 U	1.0 U	1.0 U	1.0 U	1.0 U	1.0 U	1.0 U	1.0 U	1.0 U	1.0 U	1.0 U	1.0 U	1.0 U	1.0 U	1.0 U	1.0 U	1.0 U	1.0 U	1.0 U	1.0 U
	trans-1,2-Dichloroethene	N/A	**5.5**	**6.8**	**5.2**	**1.8**	**1.4**	**6.7**	1.0 U	1.0 U	**6.2**	**5.8**	**1.0**	**2.6**	**2.6**	**2.0**	**4.7**	**4.7**	**5.6**	**4.7**	**3.6**	
	Trichloroethene	N/A	**5.3**	**6.2**	**5.0**	**1.5**	**1.0 U**	**4.0**	1.0 U	1.0 U	**3.4**	**2.9**	1.0 U	**2.0**	**4.0**	**6.1**	**5.2**	**5.2**	**3.8**	**2.4**	**2.1**	
	1,2-Dichlorobenzene	N/A	1.0 U	1.0 U	1.0 U	1.0 U	1.0 U	1.0 U	1.0 U	1.0 U	1.0 U	1.0 U	1.0 U	1.0 U	1.0 U	1.0 U	1.0 U	1.0 U	1.0 U	1.0 U	1.0 U	1.0 U
	1,3-Dichlorobenzene	N/A	1.0 U	1.0 U	1.0 U	1.0 U	1.0 U	1.0 U	1.0 U	1.0 U	1.0 U	1.0 U	1.0 U	1.0 U	1.0 U	1.0 U	1.0 U	1.0 U	1.0 U	1.0 U	1.0 U	1.0 U
	1,4-Dichlorobenzene	N/A	**1.3**	**2.8**	**2.8**	**1.2**	**1.1**	**3.2**	1.0 U	1.0 U	**2.8**	**2.8**	1.0 U	**1.3**	**1.2**	**2.3**	**1.9**	**1.9**	**2.2**	**2.6**	**2.7**	
	Methyl tert butyl ether	N/A	2.0 U	2.0 U	2.0 U	2.0 U	2.0 U	2.0 U	2.0 U	2.0 U	2.0 U	2.0 U	2.0 U	2.0 U	2.0 U	2.0 U	2.0 U	2.0 U	2.0 U	2.0 U	2.0 U	2.0 U
	p/m-Xylene	N/A	2.0 U	2.0 U	2.0 U	2.0 U	2.0 U	2.0 U	2.0 U	2.0 U	2.0 U	2.0 U	2.0 U	2.0 U	2.0 U	2.0 U	2.0 U	2.0 U	2.0 U	2.0 U	2.0 U	2.0 U
	o-Xylene	N/A	1.0 U	1.0 U	1.0 U	1.0 U	1.0 U	1.0 U	1.0 U	1.0 U	1.0 U	1.0 U	1.0 U	1.0 U	1.0 U	1.0 U	1.0 U	1.0 U	1.0 U	1.0 U	1.0 U	1.0 U
	Xylene (Total)	N/A	NA	1.0 U	1.0 U	1.0 U	1.0 U	1.0 U	1.0 U	1.0 U	1.0 U	1.0 U	1.0 U	1.0 U	1.0 U	1.0 U	1.0 U	1.0 U	1.0 U	1.0 U	1.0 U	1.0 U
	cis-1,2-Dichloroethene	N/A	**21**	**26**	**21**	**9.2**	**7.1**	**20**	**4.1**	1.0 U	**20**	**15**	**3.8**	**6.4**	**5.8**	**2.8**	**8.1**	**8.1**	**12**	**9.8**	**7.8**	
	1,2-Dichloroethene (total)	N/A	NA	**33**	**26**	**11**	**8.5**	**27**	**4.1**	1.0 U	**26**	**21**	**4.8**	**9.0**	**8.4**	**4.8**	**13**	**13**	**18**	**15**	**11**	
	Dibromomethane	N/A	2.0 U	2.0 U	2.0 U	2.0 U	2.0 U	2.0 U	2.0 U	2.0 U	2.0 U	2.0 U	2.0 U	2.0 U	2.0 U	2.0 U	2.0 U	2.0 U	2.0 U	2.0 U	2.0 U	2.0 U
	1,2,3-Trichloropropane	N/A	2.0 U	2.0 U	2.0 U	2.0 U	2.0 U	2.0 U	2.0 U	2.0 U	2.0 U	2.0 U	2.0 U	2.0 U	2.0 U	2.0 U	2.0 U	2.0 U	2.0 U	2.0 U	2.0 U	2.0 U
	Styrene	N/A	1.0 U	1.0 U	1.0 U	1.0 U	1.0 U	1.0 U	1.0 U	1.0 U	1.0 U	1.0 U	1.0 U	1.0 U	1.0 U	1.0 U	1.0 U	1.0 U	1.0 U	1.0 U	1.0 U	1.0 U
	Dichlorodifluoromethane	N/A	2.0 U	2.0 U	2.0 U	2.0 U	2.0 U	2.0 U	2.0 U	2.0 U	2.0 U	2.0 U	2.0 U	2.0 U	2.0 U	2.0 U	2.0 U	2.0 U	2.0 U	2.0 U	2.0 U	2.0 U
	Acetone	N/A	5.0 U	5.0 U	5.0 U	5.0 U	5.0 U	5.0 U	5.0 U	5.0 U	5.0 U	5.0 U	5.0 U	5.0 U	5.0 U	5.0 U	5.0 U	5.0 U	5.0 U	5.0 U	5.0 U	5.0 U
	Carbon disulfide	N/A	2.0 U	2.0 U	2.0 U	2.0 U	2.0 U	2.0 U	2.0 U	2.0 U	2.0 U	2.0 U	2.0 U	2.0 U	2.0 U	2.0 U	2.0 U	2.0 U	2.0 U	2.0 U	2.0 U	2.0 U
	2-Butanone	N/A	5.0 U	5.0 U	5.0 U	5.0 U	5.0 U	5.0 U	5.0 U	5.0 U	5.0 U	5.0 U	5.0 U	5.0 U	5.0 U	5.0 U	5.0 U	5.0 U	5.0 U	5.0 U	5.0 U	5.0 U

Table 5
Summary of Hydraulic Control System Results for Water Samples
2012 through 2015
New Bedford High School
New Bedford, Massachusetts

Analysis	Analyte	Sample Port:	SP-1																		
		Sample ID:	INFLUENT	INFLUENT	INFLUENT	INFLUENT	INFLUENT	INFLUENT	INFLUENT	INFLUENT	INFLUENT	INFLUENT	INFLUENT	INFLUENT	INFLUENT	INFLUENT	INFLUENT	INFLUENT	INFLUENT	INFLUENT	INFLUENT
		Filter Size (micron)^	N/A	N/A	N/A	N/A	N/A	N/A	N/A	N/A	N/A	N/A	N/A	N/A	N/A	N/A	N/A	N/A	N/A	N/A	N/A
		Sample Date:	4/21/2014	5/19/2014	6/17/2014	7/15/2014	8/14/2014	9/10/2014	10/15/2014	11/14/2014	12/10/2014	1/14/2015	2/17/2015	3/16/2015	4/13/2015	5/14/2015	6/4/2015	7/30/2015	8/14/2015	9/14/2015	10/13/2015
		Limits*																			
	4-Methyl-2-pentanone	N/A	5.0 U	5.0 U	5.0 U	5.0 U	5.0 U	5.0 U	5.0 U	5.0 U	5.0 U	5.0 U	5.0 U	5.0 U	5.0 U	5.0 U	5.0 U	5.0 U	5.0 U	5.0 U	5.0 U
	2-Hexanone	N/A	5.0 U	5.0 U	5.0 U	5.0 U	5.0 U	5.0 U	5.0 U	5.0 U	5.0 U	5.0 U	5.0 U	5.0 U	5.0 U	5.0 U	5.0 U	5.0 U	5.0 U	5.0 U	5.0 U
	Bromochloromethane	N/A	2.0 U	2.0 U	2.0 U	2.0 U	2.0 U	2.0 U	2.0 U	2.0 U	2.0 U	2.0 U	2.0 U	2.0 U	2.0 U	2.0 U	2.0 U	2.0 U	2.0 U	2.0 U	2.0 U
	Tetrahydrofuran	N/A	2.0 U	2.0 U	2.0 U	2.0 U	2.0 U	2.0 U	2.0 U	2.0 U	2.0 U	2.0 U	2.0 U	2.0 U	2.0 U	2.0 U	2.0 U	2.0 U	2.0 U	2.0 U	2.0 U
	2,2-Dichloropropane	N/A	2.0 U	2.0 U	2.0 U	2.0 U	2.0 U	2.0 U	2.0 U	2.0 U	2.0 U	2.0 U	2.0 U	2.0 U	2.0 U	2.0 U	2.0 U	2.0 U	2.0 U	2.0 U	2.0 U
	1,2-Dibromoethane	N/A	2.0 U	2.0 U	2.0 U	2.0 U	2.0 U	2.0 U	2.0 U	2.0 U	2.0 U	2.0 U	2.0 U	2.0 U	2.0 U	2.0 U	2.0 U	2.0 U	2.0 U	2.0 U	2.0 U
	1,3-Dichloropropane	N/A	2.0 U	2.0 U	2.0 U	2.0 U	2.0 U	2.0 U	2.0 U	2.0 U	2.0 U	2.0 U	2.0 U	2.0 U	2.0 U	2.0 U	2.0 U	2.0 U	2.0 U	2.0 U	2.0 U
	1,1,1,2-Tetrachloroethane	N/A	1.0 U	1.0 U	1.0 U	1.0 U	1.0 U	1.0 U	1.0 U	1.0 U	1.0 U	1.0 U	1.0 U	1.0 U	1.0 U	1.0 U	1.0 U	1.0 U	1.0 U	1.0 U	1.0 U
	Bromobenzene	N/A	2.0 U	2.0 U	2.0 U	2.0 U	2.0 U	2.0 U	2.0 U	2.0 U	2.0 U	2.0 U	2.0 U	2.0 U	2.0 U	2.0 U	2.0 U	2.0 U	2.0 U	2.0 U	2.0 U
	n-Butylbenzene	N/A	2.0 U	2.0 U	2.0 U	2.0 U	2.0 U	2.0 U	2.0 U	2.0 U	2.0 U	2.0 U	2.0 U	2.0 U	2.0 U	2.0 U	2.0 U	2.0 U	2.0 U	2.0 U	2.0 U
	sec-Butylbenzene	N/A	2.0 U	2.0 U	2.0 U	2.0 U	2.0 U	2.0 U	2.0 U	2.0 U	2.0 U	2.0 U	2.0 U	2.0 U	2.0 U	2.0 U	2.0 U	2.0 U	2.0 U	2.0 U	2.0 U
	tert-Butylbenzene	N/A	2.0 U	2.0 U	2.0 U	2.0 U	2.0 U	2.0 U	2.0 U	2.0 U	2.0 U	2.0 U	2.0 U	2.0 U	2.0 U	2.0 U	2.0 U	2.0 U	2.0 U	2.0 U	2.0 U
	o-Chlorotoluene	N/A	2.0 U	2.0 U	2.0 U	2.0 U	2.0 U	2.0 U	2.0 U	2.0 U	2.0 U	2.0 U	2.0 U	2.0 U	2.0 U	2.0 U	2.0 U	2.0 U	2.0 U	2.0 U	2.0 U
	p-Chlorotoluene	N/A	2.0 U	2.0 U	2.0 U	2.0 U	2.0 U	2.0 U	2.0 U	2.0 U	2.0 U	2.0 U	2.0 U	2.0 U	2.0 U	2.0 U	2.0 U	2.0 U	2.0 U	2.0 U	2.0 U
	1,2-Dibromo-3-chloropropane	N/A	2.0 U	2.0 U	2.0 U	2.0 U	2.0 U	2.0 U	2.0 U	2.0 U	2.0 U	2.0 U	2.0 U	2.0 U	2.0 U	2.0 U	2.0 U	2.0 U	2.0 U	2.0 U	2.0 U
	Hexachlorobutadiene	N/A	0.60 U	0.60 U	0.60 U	0.60 U	0.60 U	0.60 U	0.60 U	0.60 U	0.60 U	0.60 U	0.60 U	0.60 U	0.60 U	0.60 U	0.60 U	0.60 U	0.60 U	0.60 U	0.60 U
	Isopropylbenzene	N/A	2.0 U	2.0 U	2.0 U	2.0 U	2.0 U	2.0 U	2.0 U	2.0 U	2.0 U	2.0 U	2.0 U	2.0 U	2.0 U	2.0 U	2.0 U	2.0 U	2.0 U	2.0 U	2.0 U
	p-Isopropyltoluene	N/A	2.0 U	2.0 U	2.0 U	2.0 U	2.0 U	2.0 U	2.0 U	2.0 U	2.0 U	2.0 U	2.0 U	2.0 U	2.0 U	2.0 U	2.0 U	2.0 U	2.0 U	2.0 U	2.0 U
	Naphthalene	N/A	2.0 U	2.0 U	2.0 U	2.0 U	2.0 U	2.0 U	2.0 U	2.0 U	2.0 U	2.0 U	2.0 U	2.0 U	2.0 U	2.0 U	2.0 U	2.0 U	2.0 U	2.0 U	2.0 U
	n-Propylbenzene	N/A	2.0 U	2.0 U	2.0 U	2.0 U	2.0 U	2.0 U	2.0 U	2.0 U	2.0 U	2.0 U	2.0 U	2.0 U	2.0 U	2.0 U	2.0 U	2.0 U	2.0 U	2.0 U	2.0 U
	1,2,3-Trichlorobenzene	N/A	2.0 U	2.0 U	2.0 U	2.0 U	2.0 U	2.0 U	2.0 U	2.0 U	2.0 U	2.0 U	2.0 U	2.0 U	2.0 U	2.0 U	2.0 U	2.0 U	2.0 U	2.0 U	2.0 U
	1,2,4-Trichlorobenzene	N/A	2.0 U	**2.2**	**2.1**	2.0 U	2.0 U	**2.0**	2.0 U	2.0 U	2.0 U	2.0 U	2.0 U	2.0 U	2.0 U	2.0 U	2.0 U	2.0 U	2.0 U	2.0 U	2.0 U
	1,3,5-Trimethylbenzene	N/A	2.0 U	2.0 U	2.0 U	2.0 U	2.0 U	2.0 U	2.0 U	2.0 U	2.0 U	2.0 U	2.0 U	2.0 U	2.0 U	2.0 U	2.0 U	2.0 U	2.0 U	2.0 U	2.0 U
	1,2,4-Trimethylbenzene	N/A	2.0 U	2.0 U	2.0 U	2.0 U	2.0 U	2.0 U	2.0 U	2.0 U	2.0 U	2.0 U	2.0 U	2.0 U	2.0 U	2.0 U	2.0 U	2.0 U	2.0 U	2.0 U	2.0 U
	Ethyl ether	N/A	2.0 U	2.0 U	2.0 U	2.0 U	2.0 U	2.0 U	2.0 U	2.0 U	2.0 U	2.0 U	2.0 U	2.0 U	2.0 U	2.0 U	2.0 U	2.0 U	2.0 U	2.0 U	2.0 U
	Isopropyl Ether	N/A	2.0 U	2.0 U	2.0 U	2.0 U	2.0 U	2.0 U	2.0 U	2.0 U	2.0 U	2.0 U	2.0 U	2.0 U	2.0 U	2.0 U	2.0 U	2.0 U	2.0 U	2.0 U	2.0 U
	Ethyl-Tert-Butyl-Ether	N/A	2.0 U	2.0 U	2.0 U	2.0 U	2.0 U	2.0 U	2.0 U	2.0 U	2.0 U	2.0 U	2.0 U	2.0 U	2.0 U	2.0 U	2.0 U	2.0 U	2.0 U	2.0 U	2.0 U
	Tertiary-Amyl Methyl Ether	N/A	2.0 U	2.0 U	2.0 U	2.0 U	2.0 U	2.0 U	2.0 U	2.0 U	2.0 U	2.0 U	2.0 U	2.0 U	2.0 U	2.0 U	2.0 U	2.0 U	2.0 U	2.0 U	2.0 U
	1,4-Dioxane	N/A	250 U	250 U	250 U	250 U	250 U	250 U	250 U	250 U	250 U	250 U	250 U	250 U	250 U	250 U	250 U	250 U	250 U	250 U	250 U
VOCs - TICs																					
(ug/L)	Sulfur Dioxide	N/A	NA	NA	NA	NA	NA	NA	NA	NA	NA	NA	NA	NA	NA	NA	NA	NA	NA	NA	NA
	Unknown aldehyde	N/A	NA	NA	NA	NA	NA	NA	NA	NA	NA	NA	NA	NA	NA	NA	NA	NA	NA	NA	NA
	Unknown Substituted Alkanes	N/A	NA	NA	NA	NA	NA	NA	NA	NA	NA	NA	NA	NA	NA	NA	NA	NA	NA	NA	NA
	Unknown Substituted Alkenes	N/A	NA	NA	NA	NA	NA	NA	NA	NA	NA	NA	NA	NA	NA	NA	NA	NA	NA	NA	NA
	Unknown	N/A	NA	NA	NA	NA	NA	NA	NA	NA	NA	NA	NA	NA	NA	NA	NA	NA	NA	NA	NA
PCBs																					
(ug/L)	Aroclor 1016	N/A	0.250 U	1.25 U	1.25 U	1.25 U	1.25 U	0.500 U	0.500 U	1.25 U	1.25 U	0.500 U	0.500 U	0.500 U	0.500 U	1.25 U	1.25 U	0.250 U	1.25 U	1.25 U	2.50 U
	Aroclor 1221	N/A	0.250 U	1.25 U	1.25 U	1.25 U	1.25 U	0.500 U	0.500 U	1.25 U	1.25 U	0.500 U	0.500 U	0.500 U	0.500 U	1.25 U	1.25 U	0.250 U	1.25 U	1.25 U	2.50 U
	Aroclor 1232	N/A	0.250 U	1.25 U	1.25 U	1.25 U	1.25 U	0.500 U	0.500 U	1.25 U	1.25 U	0.500 U	0.500 U	0.500 U	0.500 U	1.25 U	1.25 U	0.250 U	1.25 U	1.25 U	2.50 U
	Aroclor 1242	N/A	0.250 U	1.25 U	1.25 U	1.25 U	1.25 U	0.500 U	**3.31**	1.25 U	1.25 U	**3.20**	**2.66**	**2.17**	0.500 U	1.25 U	2.44	0.250 U	1.25 U	1.25 U	2.50 U
	Aroclor 1248	N/A	0.250 U	1.25 U	1.25 U	1.25 U	1.25 U	0.500 U	0.50 U	1.25 U	1.25 U	0.500 U	0.500 U	0.500 U	0.500 U	1.25 U	1.25 U	0.250 U	1.25 U	1.25 U	2.50 U
	Aroclor 1254	N/A	**3.19**	**23.9**	**15.0**	**27.9**	**15.5**	**9.6**	**10.6**	**10.9**	**18.3**	**11.8**	**7.15**	**6.73**	**8.04**	**13.9**	**17.7**	**5.89**	**10.0**	**14.3**	**8.98**
	Aroclor 1260	N/A	0.250 U	1.25 U	1.25 U	1.25 U	1.25 U	0.500 U	0.500 U	1.25 U	1.25 U	0.500 U	0.500 U	0.500 U	0.500 U	1.25 U	1.25 U	0.250 U	1.25 U	1.25 U	2.50 U
	Aroclor 1262	N/A	0.250 U	1.25 U	1.25 U	1.25 U	1.25 U	0.500 U	0.500 U	1.25 U	1.25 U	0.500 U	0.500 U	0.500 U	0.500 U	1.25 U	1.25 U	0.250 U	1.25 U	1.25 U	2.50 U
	Aroclor 1268	N/A	0.250 U	1.25 U	1.25 U	1.25 U	1.25 U	0.500 U	0.500 U	1.25 U	1.25 U	0.500 U	0.500 U	0.500 U	0.500 U	1.25 U	1.25 U	0.250 U	1.25 U	1.25 U	2.50 U
	Total PCBs	5	**3.19**	**23.9**	**15.0**	**27.9**	**15.5**	**9.6**	**13.9**	**10.9**	**18.3**	**15.0**	**9.81**	**8.90**	**8.04**	**13.9**	**20.1**	**5.89**	**10.0**	**14.3**	**8.98**
Total Petroleum Hydrocarbons																					
(ug/L)	TPH	N/A	NA	NA	NA	NA	NA	NA	NA	NA	NA	NA	NA	NA	NA	NA	NA	NA	NA	NA	NA

Notes:
ug/L - micrograms per liter.
NJ - Presumptive evidence of compound.
J - Estimated value.
NA - Sample not analyzed for the listed analyte.
N/A - Not applicable.
U - Compound was not detected at specified quantitation limit.
Values in **Bold** indicate the compound was detected.
VOCs - Volatile Organic Compounds.
PCBs - Polychlorinated Biphenyls.
TICs - Tentatively identified compounds.
* - City of New Bedford Industrial Discharge Permit number S-123.
^ - 0.45 micron filtration done in field; 0.20 and 2.0 micron filtration performed in la

Table 5
Summary of Hydraulic Control System Results for Water Samples
2012 through 2015
New Bedford High School
New Bedford, Massachusetts

Analysis	Analyte	Sample Port:	SP-2	SP-3	SP-5						SP-6											
		Sample ID:	PRE BAG FILTER	POST BAG FILTER	POST CLAY BED	PRE CARBON	POST CLAY BED	POST CLAY BED	POST CLAY	POST CLAY FILTER	INTRA CARBON	INTRA CARBON	INTRA CARBON	INTRA CARBON	INTRA CARBON	INTRA-CARBON	INTRA-CARBON	INTRA-CARBON	INTRA-CARBON	INTRA-CARBON	INTRA-CARBON	INTRA-CARBON
		Filter Size (micron)^:	N/A	N/A	N/A	N/A	N/A	N/A	N/A	N/A	N/A	N/A	N/A	N/A	N/A	N/A	N/A	N/A	N/A	N/A	N/A	N/A
		Sample Date:	3/27/2012	3/20/2012	3/27/2012	4/3/2012	4/10/2012	4/17/2012	5/14/2012	6/11/2012	3/27/2012	4/3/2012	4/10/2012	4/17/2012	5/14/2012	6/11/2012	7/16/2012	8/21/2012	9/18/2012	10/18/2012	11/21/2012	12/12/2012
		Limits*																				
VOCs																						
(ug/L)	Methylene chloride	N/A	NA	400 U	NA	NA	NA	NA	NA	NA	2.0 U	2.0 U	2.0 U	2.0 U	2.0 U	2.0 U	2.0 U	2.0 U	2.0 U	2.0 U	8.0 U	10 U
	1,1-Dichloroethane	N/A	NA	200 U	NA	NA	NA	NA	NA	NA	1.0 U	1.0 U	1.0 U	1.0 U	1.0 U	1.0 U	1.0 U	1.0 U	1.0 U	1.0 U	4.0 U	5.0 U
	Chloroform	N/A	NA	200 U	NA	NA	NA	NA	NA	NA	1.0 U	1.0 U	1.0 U	1.0 U	1.0 U	1.0 U	1.0 U	1.0 U	1.0 U	1.0 U	4.0 U	5.0 U
	Carbon tetrachloride	N/A	NA	200 U	NA	NA	NA	NA	NA	NA	1.0 U	1.0 U	1.0 U	1.0 U	1.0 U	1.0 U	1.0 U	1.0 U	1.0 U	1.0 U	4.0 U	5.0 U
	1,2-Dichloropropane	N/A	NA	200 U	NA	NA	NA	NA	NA	NA	1.0 U	1.0 U	1.0 U	1.0 U	1.0 U	1.0 U	1.0 U	1.0 U	1.0 U	1.0 U	4.0 U	5.0 U
	Dibromochloromethane	N/A	NA	200 U	NA	NA	NA	NA	NA	NA	1.0 U	1.0 U	1.0 U	1.0 U	1.0 U	1.0 U	1.0 U	1.0 U	1.0 U	1.0 U	4.0 U	5.0 U
	1,1,2-Trichloroethane	N/A	NA	200 U	NA	NA	NA	NA	NA	NA	1.0 U	1.0 U	1.0 U	1.0 U	1.0 U	1.0 U	1.0 U	1.0 U	1.0 U	1.0 U	4.0 U	5.0 U
	Tetrachloroethene	N/A	NA	200 U	NA	NA	NA	NA	NA	NA	1.0 U	1.0 U	1.0 U	1.0 U	1.0 U	1.0 U	1.0 U	1.0 U	1.0 U	1.0 U	4.0 U	5.0 U
	Chlorobenzene	N/A	NA	200 U	NA	NA	NA	NA	NA	NA	1.0 U	1.0 U	1.0 U	1.0 U	1.0 U	1.0 U	1.0 U	1.0 U	1.0 U	1.0 U	4.0 U	5.0 U
	Trichlorofluoromethane	N/A	NA	400 U	NA	NA	NA	NA	NA	NA	2.0 U	2.0 U	2.0 U	2.0 U	2.0 U	2.0 U	2.0 U	2.0 U	2.0 U	2.0 U	8.0 U	10 U
	1,2-Dichloroethane	N/A	NA	200 U	NA	NA	NA	NA	NA	NA	1.0 U	1.0 U	1.0 U	1.0 U	1.0 U	1.0 U	1.0 U	1.0 U	1.0 U	1.0 U	4.0 U	5.0 U
	1,1,1-Trichloroethane	N/A	NA	200 U	NA	NA	NA	NA	NA	NA	1.0 U	1.0 U	1.0 U	1.0 U	1.0 U	1.0 U	1.0 U	1.0 U	1.0 U	1.0 U	4.0 U	5.0 U
	Bromodichloromethane	N/A	NA	200 U	NA	NA	NA	NA	NA	NA	1.0 U	1.0 U	1.0 U	1.0 U	1.0 U	1.0 U	1.0 U	1.0 U	1.0 U	1.0 U	4.0 U	5.0 U
	trans-1,3-Dichloropropene	N/A	NA	100 U	NA	NA	NA	NA	NA	NA	0.50 U	0.50 U	0.50 U	0.50 U	0.50 U	0.50 U	0.50 U	0.50 U	0.50 U	0.50 U	2.0 U	2.5 U
	cis-1,3-Dichloropropene	N/A	NA	100 U	NA	NA	NA	NA	NA	NA	0.50 U	0.50 U	0.50 U	0.50 U	0.50 U	0.50 U	0.50 U	0.50 U	0.50 U	0.50 U	2.0 U	2.5 U
	1,3-Dichloropropene, Total	N/A	NA	NA	NA	NA	NA	NA	NA	NA	NA	NA	NA	NA	NA	NA	NA	NA	NA	NA	NA	NA
	1,1-Dichloropropene	N/A	NA	400 U	NA	NA	NA	NA	NA	NA	2.0 U	2.0 U	2.0 U	2.0 U	2.0 U	2.0 U	2.0 U	2.0 U	2.0 U	2.0 U	8.0 U	10 U
	Bromoform	N/A	NA	400 U	NA	NA	NA	NA	NA	NA	2.0 U	2.0 U	2.0 U	2.0 U	2.0 U	2.0 U	2.0 U	2.0 U	2.0 U	2.0 U	8.0 U	10 U
	1,1,2,2-Tetrachloroethane	N/A	NA	200 U	NA	NA	NA	NA	NA	NA	1.0 U	1.0 U	1.0 U	1.0 U	1.0 U	1.0 U	1.0 U	1.0 U	1.0 U	1.0 U	4.0 U	5.0 U
	Benzene	N/A	NA	100 U	NA	NA	NA	NA	NA	NA	0.50 U	0.50 U	0.50 U	0.50 U	0.50 U	0.50 U	0.50 U	0.50 U	0.50 U	0.50 U	2.0 U	2.5 U
	Toluene	N/A	NA	200 U	NA	NA	NA	NA	NA	NA	1.0 U	1.0 U	1.0 U	1.0 U	1.0 U	1.0 U	1.0 U	1.0 U	1.0 U	1.0 U	4.0 U	5.0 U
	Ethylbenzene	N/A	NA	200 U	NA	NA	NA	NA	NA	NA	1.0 U	1.0 U	1.0 U	1.0 U	1.0 U	1.0 U	1.0 U	1.0 U	1.0 U	1.0 U	4.0 U	5.0 U
	Chloromethane	N/A	NA	400 U	NA	NA	NA	NA	NA	NA	2.0 U	2.0 U	2.0 U	2.0 U	2.0 U	2.0 U	2.0 U	2.0 U	2.0 U	2.0 U	8.0 U	10 U
	Bromomethane	N/A	NA	400 U	NA	NA	NA	NA	NA	NA	2.0 U	2.0 U	2.0 U	2.0 U	2.0 U	2.0 U	2.0 U	2.0 U	2.0 U	2.0 U	8.0 U	10 U
	Vinyl chloride	N/A	NA	**280**	NA	NA	NA	NA	NA	NA	1.0 U	1.0 U	1.0 U	1.0 U	**3.1**	**12**	**57**	**61**	**90**	**98**	**59**	**28**
	Chloroethane	N/A	NA	400 U	NA	NA	NA	NA	NA	NA	2.0 U	2.0 U	2.0 U	2.0 U	2.0 U	2.0 U	2.0 U	2.0 U	2.0 U	2.0 U	8.0 U	10 U
	1,1-Dichloroethene	N/A	NA	200 U	NA	NA	NA	NA	NA	NA	1.0 U	1.0 U	1.0 U	1.0 U	1.0 U	1.0 U	1.0 U	1.0 U	1.0 U	1.0 U	4.0 U	5.0 U
	trans-1,2-Dichloroethene	N/A	NA	**810**	NA	NA	NA	NA	NA	NA	1.0 U	1.0 U	1.0 U	1.0 U	**4.3**	1.0 U	1.0 U	1.0 U	1.0 U	1.0 U	4.0 U	5.0 U
	Trichloroethene	N/A	NA	**15,000**	NA	NA	NA	NA	NA	NA	1.0 U	1.0 U	1.0 U	1.0 U	**7.9**	1.0 U	1.0 U	1.0 U	1.0 U	1.0 U	4.0 U	5.0 U
	1,2-Dichlorobenzene	N/A	NA	200 U	NA	NA	NA	NA	NA	NA	1.0 U	1.0 U	1.0 U	1.0 U	1.0 U	1.0 U	1.0 U	1.0 U	1.0 U	1.0 U	4.0 U	5.0 U
	1,3-Dichlorobenzene	N/A	NA	200 U	NA	NA	NA	NA	NA	NA	1.0 U	1.0 U	1.0 U	1.0 U	1.0 U	1.0 U	1.0 U	1.0 U	1.0 U	1.0 U	4.0 U	5.0 U
	1,4-Dichlorobenzene	N/A	NA	200 U	NA	NA	NA	NA	NA	NA	1.0 U	1.0 U	1.0 U	1.0 U	1.0 U	1.0 U	1.0 U	1.0 U	1.0 U	1.0 U	4.0 U	5.0 U
	Methyl tert butyl ether	N/A	NA	400 U	NA	NA	NA	NA	NA	NA	2.0 U	2.0 U	2.0 U	2.0 U	2.0 U	2.0 U	2.0 U	2.0 U	2.0 U	2.0 U	8.0 U	10 U
	p/m-Xylene	N/A	NA	400 U	NA	NA	NA	NA	NA	NA	2.0 U	2.0 U	2.0 U	2.0 U	2.0 U	2.0 U	2.0 U	2.0 U	2.0 U	2.0 U	8.0 U	10 U
	o-Xylene	N/A	NA	200 U	NA	NA	NA	NA	NA	NA	1.0 U	1.0 U	1.0 U	1.0 U	1.0 U	1.0 U	1.0 U	1.0 U	1.0 U	1.0 U	4.0 U	5.0 U
	Xylene (Total)	N/A	NA	NA	NA	NA	NA	NA	NA	NA	NA	NA	NA	NA	NA	NA	NA	NA	NA	NA	NA	NA
	cis-1,2-Dichloroethene	N/A	NA	**3,000**	NA	NA	NA	NA	NA	NA	1.0 U	1.0 U	1.0 U	1.0 U	**17**	1.0 U	1.0 U	1.0 U	1.0 U	1.0 U	**240**	**370**
	1,2-Dichloroethene (total)	N/A	NA	NA	NA	NA	NA	NA	NA	NA	NA	NA	NA	NA	NA	NA	NA	NA	NA	NA	NA	NA
	Dibromomethane	N/A	NA	400 U	NA	NA	NA	NA	NA	NA	2.0 U	2.0 U	2.0 U	2.0 U	2.0 U	2.0 U	2.0 U	2.0 U	2.0 U	2.0 U	8.0 U	10 U
	1,2,3-Trichloropropane	N/A	NA	400 U	NA	NA	NA	NA	NA	NA	2.0 U	2.0 U	2.0 U	2.0 U	2.0 U	2.0 U	2.0 U	2.0 U	2.0 U	2.0 U	8.0 U	10 U
	Styrene	N/A	NA	200 U	NA	NA	NA	NA	NA	NA	1.0 U	1.0 U	1.0 U	1.0 U	1.0 U	1.0 U	1.0 U	1.0 U	1.0 U	1.0 U	4.0 U	5.0 U
	Dichlorodifluoromethane	N/A	NA	400 U	NA	NA	NA	NA	NA	NA	2.0 U	2.0 U	2.0 U	2.0 U	2.0 U	2.0 U	2.0 U	2.0 U	2.0 U	2.0 U	8.0 U	10 U
	Acetone	N/A	NA	1,000 U	NA	NA	NA	NA	NA	NA	5.0 U	5.0 U	5.0 U	5.0 U	5.0 U	5.0 U	5.0 U	5.0 U	5.0 U	5.0 U	20 U	25 U
	Carbon disulfide	N/A	NA	400 U	NA	NA	NA	NA	NA	NA	2.0 U	2.0 U	2.0 U	2.0 U	2.0 U	2.0 U	2.0 U	2.0 U	2.0 U	2.0 U	8.0 U	10 U
	2-Butanone	N/A	NA	1,000 U	NA	NA	NA	NA	NA	NA	5.0 U	5.0 U	5.0 U	5.0 U	5.0 U	5.0 U	5.0 U	5.0 U	5.0 U	5.0 U	20 U	25 U

Table 5
Summary of Hydraulic Control System Results for Water Samples
2012 through 2015
New Bedford High School
New Bedford, Massachusetts

Analysis	Analyte	Sample Port:	SP-2	SP-3	SP-5						SP-6											
		Sample ID:	PRE BAG FILTER	POST BAG FILTER	POST CLAY BED	PRE CARBON	POST CLAY BED	POST CLAY BED	POST CLAY	POST CLAY FILTER	INTRA CARBON	INTRA CARBON	INTRA CARBON	INTRA CARBON	INTRA CARBON	INTRA-CARBON	INTRA-CARBON	INTRA-CARBON	INTRA-CARBON	INTRA-CARBON	INTRA-CARBON	INTRA-CARBON
		Filter Size (micron)^	N/A	N/A	N/A	N/A	N/A	N/A	N/A	N/A	N/A	N/A	N/A	N/A	N/A	N/A	N/A	N/A	N/A	N/A	N/A	N/A
		Sample Date:	3/27/2012	3/20/2012	3/27/2012	4/3/2012	4/10/2012	4/17/2012	5/14/2012	6/11/2012	3/27/2012	4/3/2012	4/10/2012	4/17/2012	5/14/2012	6/11/2012	7/16/2012	8/21/2012	9/18/2012	10/18/2012	11/21/2012	12/12/2012
		Limits*																				
	4-Methyl-2-pentanone	N/A	NA	1,000 U	NA	NA	NA	NA	NA	NA	5.0 U	5.0 U	5.0 U	5.0 U	5.0 U	5.0 U	5.0 U	5.0 U	5.0 U	5.0 U	20 U	25 U
	2-Hexanone	N/A	NA	1,000 U	NA	NA	NA	NA	NA	NA	5.0 U	5.0 U	5.0 U	5.0 U	5.0 U	5.0 U	5.0 U	5.0 U	5.0 U	5.0 U	20 U	25 U
	Bromochloromethane	N/A	NA	400 U	NA	NA	NA	NA	NA	NA	2.0 U	2.0 U	2.0 U	2.0 U	2.0 U	2.0 U	2.0 U	2.0 U	2.0 U	2.0 U	8.0 U	10 U
	Tetrahydrofuran	N/A	NA	1,000 U	NA	NA	NA	NA	NA	NA	**8.2**	**8.2**	**9.1**	**8.5**	5.0 U	**12**	**14**	**12**	**16**	**11**	20 U	25 U
	2,2-Dichloropropane	N/A	NA	400 U	NA	NA	NA	NA	NA	NA	2.0 U	2.0 U	2.0 U	2.0 U	2.0 U	2.0 U	2.0 U	2.0 U	2.0 U	2.0 U	8.0 U	10 U
	1,2-Dibromoethane	N/A	NA	400 U	NA	NA	NA	NA	NA	NA	2.0 U	2.0 U	2.0 U	2.0 U	2.0 U	2.0 U	2.0 U	2.0 U	2.0 U	2.0 U	8.0 U	10 U
	1,3-Dichloropropane	N/A	NA	400 U	NA	NA	NA	NA	NA	NA	2.0 U	2.0 U	2.0 U	2.0 U	2.0 U	2.0 U	2.0 U	2.0 U	2.0 U	2.0 U	8.0 U	10 U
	1,1,1,2-Tetrachloroethane	N/A	NA	200 U	NA	NA	NA	NA	NA	NA	1.0 U	1.0 U	1.0 U	1.0 U	1.0 U	1.0 U	1.0 U	1.0 U	1.0 U	1.0 U	4.0 U	5.0 U
	Bromobenzene	N/A	NA	400 U	NA	NA	NA	NA	NA	NA	2.0 U	2.0 U	2.0 U	2.0 U	2.0 U	2.0 U	2.0 U	2.0 U	2.0 U	2.0 U	8.0 U	10 U
	n-Butylbenzene	N/A	NA	400 U	NA	NA	NA	NA	NA	NA	2.0 U	2.0 U	2.0 U	2.0 U	2.0 U	2.0 U	2.0 U	2.0 U	2.0 U	2.0 U	8.0 U	10 U
	sec-Butylbenzene	N/A	NA	400 U	NA	NA	NA	NA	NA	NA	2.0 U	2.0 U	2.0 U	2.0 U	2.0 U	2.0 U	2.0 U	2.0 U	2.0 U	2.0 U	8.0 U	10 U
	tert-Butylbenzene	N/A	NA	400 U	NA	NA	NA	NA	NA	NA	2.0 U	2.0 U	2.0 U	2.0 U	2.0 U	2.0 U	2.0 U	2.0 U	2.0 U	2.0 U	8.0 U	10 U
	o-Chlorotoluene	N/A	NA	400 U	NA	NA	NA	NA	NA	NA	2.0 U	2.0 U	2.0 U	2.0 U	2.0 U	2.0 U	2.0 U	2.0 U	2.0 U	2.0 U	8.0 U	10 U
	p-Chlorotoluene	N/A	NA	400 U	NA	NA	NA	NA	NA	NA	2.0 U	2.0 U	2.0 U	2.0 U	2.0 U	2.0 U	2.0 U	2.0 U	2.0 U	2.0 U	8.0 U	10 U
	1,2-Dibromo-3-chloropropane	N/A	NA	400 U	NA	NA	NA	NA	NA	NA	2.0 U	2.0 U	2.0 U	2.0 U	2.0 U	2.0 U	2.0 U	2.0 U	2.0 U	2.0 U	8.0 U	10 U
	Hexachlorobutadiene	N/A	NA	120 U	NA	NA	NA	NA	NA	NA	0.60 U	0.60 U	0.60 U	0.60 U	0.60 U	0.60 U	0.60 U	0.60 U	0.60 U	0.60 U	2.4 U	3.0 U
	Isopropylbenzene	N/A	NA	400 U	NA	NA	NA	NA	NA	NA	2.0 U	2.0 U	2.0 U	2.0 U	2.0 U	2.0 U	2.0 U	2.0 U	2.0 U	2.0 U	8.0 U	10 U
	p-Isopropyltoluene	N/A	NA	400 U	NA	NA	NA	NA	NA	NA	2.0 U	2.0 U	2.0 U	2.0 U	2.0 U	2.0 U	2.0 U	2.0 U	2.0 U	2.0 U	8.0 U	10 U
	Naphthalene	N/A	NA	400 U	NA	NA	NA	NA	NA	NA	2.0 U	2.0 U	2.0 U	2.0 U	2.0 U	2.0 U	2.0 U	2.0 U	2.0 U	2.0 U	8.0 U	10 U
	n-Propylbenzene	N/A	NA	400 U	NA	NA	NA	NA	NA	NA	2.0 U	2.0 U	2.0 U	2.0 U	2.0 U	2.0 U	2.0 U	2.0 U	2.0 U	2.0 U	8.0 U	10 U
	1,2,3-Trichlorobenzene	N/A	NA	400 U	NA	NA	NA	NA	NA	NA	2.0 U	2.0 U	2.0 U	2.0 U	2.0 U	2.0 U	2.0 U	2.0 U	2.0 U	2.0 U	8.0 U	10 U
	1,2,4-Trichlorobenzene	N/A	NA	400 U	NA	NA	NA	NA	NA	NA	2.0 U	2.0 U	2.0 U	2.0 U	**2.1**	2.0 U	2.0 U	2.0 U	2.0 U	2.0 U	8.0 U	10 U
	1,3,5-Trimethylbenzene	N/A	NA	400 U	NA	NA	NA	NA	NA	NA	2.0 U	2.0 U	2.0 U	2.0 U	2.0 U	2.0 U	2.0 U	2.0 U	2.0 U	2.0 U	8.0 U	10 U
	1,2,4-Trimethylbenzene	N/A	NA	400 U	NA	NA	NA	NA	NA	NA	2.0 U	2.0 U	2.0 U	2.0 U	2.0 U	2.0 U	2.0 U	2.0 U	2.0 U	2.0 U	8.0 U	10 U
	Ethyl ether	N/A	NA	400 U	NA	NA	NA	NA	NA	NA	2.0 U	2.0 U	2.0 U	2.0 U	2.0 U	2.0 U	2.0 U	2.0 U	2.0 U	2.0 U	8.0 U	10 U
	Isopropyl Ether	N/A	NA	400 U	NA	NA	NA	NA	NA	NA	2.0 U	2.0 U	2.0 U	2.0 U	2.0 U	2.0 U	2.0 U	2.0 U	2.0 U	2.0 U	8.0 U	10 U
	Ethyl-Tert-Butyl-Ether	N/A	NA	400 U	NA	NA	NA	NA	NA	NA	2.0 U	2.0 U	2.0 U	2.0 U	2.0 U	2.0 U	2.0 U	2.0 U	2.0 U	2.0 U	8.0 U	10 U
	Tertiary-Amyl Methyl Ether	N/A	NA	400 U	NA	NA	NA	NA	NA	NA	2.0 U	2.0 U	2.0 U	2.0 U	2.0 U	2.0 U	2.0 U	2.0 U	2.0 U	2.0 U	8.0 U	10 U
	1,4-Dioxane	N/A	NA	50,000 U	NA	NA	NA	NA	NA	NA	250 U	250 U	250 U	250 U	250 U	250 U	250 U	250 U	250 U	250 U	1,000 U	1,200 U
VOCs - TICs																						
(ug/L)	Sulfur Dioxide	N/A	NA	400 U	NA	NA	NA	NA	NA	NA	NA	NA	NA	NA	NA	NA	NA	NA	NA	NA	NA	NA
	Unknown aldehyde	N/A	NA	400 U	NA	NA	NA	NA	NA	NA	NA	NA	NA	NA	NA	NA	NA	NA	NA	NA	NA	NA
	Unknown Substituted Alkanes	N/A	NA	400 U	NA	NA	NA	NA	NA	NA	NA	NA	NA	NA	NA	NA	NA	NA	NA	NA	NA	NA
	Unknown Substituted Alkenes	N/A	NA	400 U	NA	NA	NA	NA	NA	NA	NA	NA	NA	NA	NA	NA	NA	NA	NA	NA	NA	NA
	Unknown	N/A	NA	50,000 U	NA	NA	NA	NA	NA	NA	NA	NA	NA	NA	NA	NA	NA	NA	NA	NA	NA	NA
PCBs																						
(ug/L)	Aroclor 1016	N/A	12.5 U	1.25 U	0.250 U	0.250 U	0.252 U	0.250 U	0.250 U	0.246 U	NA	NA	NA	NA	NA	NA	0.250 U	0.250 U	0.250 U	0.250 U	0.250 U	0.250 U
	Aroclor 1221	N/A	12.5 U	1.25 U	0.250 U	0.250 U	0.252 U	0.250 U	0.250 U	0.246 U	NA	NA	NA	NA	NA	NA	0.250 U	0.250 U	0.250 U	0.250 U	0.250 U	0.250 U
	Aroclor 1232	N/A	12.5 U	1.25 U	0.250 U	0.250 U	0.252 U	0.250 U	0.250 U	0.246 U	NA	NA	NA	NA	NA	NA	0.250 U	0.250 U	0.250 U	0.250 U	0.250 U	0.250 U
	Aroclor 1242	N/A	12.5 U	1.25 U	0.250 U	0.250 U	0.252 U	0.250 U	0.250 U	0.246 U	NA	NA	NA	NA	NA	NA	0.250 U	0.250 U	0.250 U	0.250 U	0.250 U	0.250 U
	Aroclor 1248	N/A	12.5 U	1.25 U	0.250 U	0.250 U	0.252 U	0.250 U	0.250 U	0.246 U	NA	NA	NA	NA	NA	NA	0.250 U	0.250 U	0.250 U	0.250 U	0.250 U	0.250 U
	Aroclor 1254	N/A	**278**	**18.5**	**2.80**	**2.12**	**1.54**	**0.424**	**0.290**	**4.28**	NA	NA	NA	NA	NA	NA	0.250 U	0.250 U	0.250 U	0.250 U	0.250 U	0.250 U
	Aroclor 1260	N/A	12.5 U	1.25 U	0.250 U	0.250 U	0.252 U	0.250 U	0.250 U	0.246 U	NA	NA	NA	NA	NA	NA	0.250 U	0.250 U	0.250 U	0.250 U	0.250 U	0.250 U
	Aroclor 1262	N/A	12.5 U	1.25 U	0.250 U	0.250 U	0.252 U	0.250 U	0.250 U	0.246 U	NA	NA	NA	NA	NA	NA	0.250 U	0.250 U	0.250 U	0.250 U	0.250 U	0.250 U
	Aroclor 1268	N/A	12.5 U	1.25 U	0.250 U	0.250 U	0.252 U	0.250 U	0.250 U	0.246 U	NA	NA	NA	NA	NA	NA	0.250 U	0.250 U	0.250 U	0.250 U	0.250 U	0.250 U
	Total PCBs	5	**278**	**18.5**	**2.80**	**2.12**	**1.54**	**0.424**	**0.290**	**4.28**	NA	NA	NA	NA	NA	NA	0.250 U	0.250 U	0.250 U	0.250 U	0.250 U	0.250 U
Total Petroleum Hydrocarbons																						
(ug/L)	TPH	N/A	NA	NA	NA	NA	NA	NA	NA	NA	NA	NA	NA	NA	NA	NA	NA	NA	NA	NA	NA	NA

Notes:
ug/L - micrograms per liter.
NJ - Presumptive evidence of compound.
J - Estimated value.
NA - Sample not analyzed for the listed analyte.
N/A - Not applicable.
U - Compound was not detected at specified quantitation limit.
Values in **Bold** indicate the compound was detected.
VOCs - Volatile Organic Compounds.
PCBs - Polychlorinated Biphenyls.
TICs - Tentatively identified compounds.
* - City of New Bedford Industrial Discharge Permit number S-123.
^ - 0.45 micron filtration done in field; 0.20 and 2.0 micron filtration performed in la

Table 5
Summary of Hydraulic Control System Results for Water Samples
2012 through 2015
New Bedford High School
New Bedford, Massachusetts

Analysis	Analyte	Sample Port:	SP-6											SP-7								
		Sample ID:	INTRA-CARBON	INTRA-CARBON	INTRA-CARBON	INTRA-CARBON	INTRA-CARBON	INTRA-CARBON	INTRA-CARBON	INTRA-CARBON	INTRA-CARBON	INTRA-CARBON	INTRA-CARBON	EFFLUENT	EFFLUENT	EFFLUENT	EFFLUENT	EFFLUENT	EFFLUENT	EFFLUENT	EFFLUENT	EFFLUENT
		Filter Size (micron)^	N/A	N/A	N/A	N/A	N/A	N/A	N/A	N/A	N/A	N/A	N/A	N/A	N/A	N/A	N/A	N/A	N/A	N/A	N/A	N/A
		Sample Date:	1/15/2013	2/15/2013	3/13/2013	4/16/2013	5/16/2013	6/18/2013	7/30/2013	8/20/2013	9/16/2013	10/15/2013	11/15/2013	3/20/2012	3/27/2012	4/3/2012	4/10/2012	4/17/2012	5/14/2012	6/11/2012	7/16/2012	8/21/2012
		Limits*																				
VOCs																						
(ug/L)	Methylene chloride	N/A	4.0 U	8.0 U	2.0 U	NA	10 U	NA	NA	NA	NA	NA	NA	2.0 U	2.0 U	2.0 U	2.0 U	2.0 U	2.0 U	2.0 U	2.0 U	2.0 U
	1,1-Dichloroethane	N/A	2.0 U	4.0 U	1.0 U	NA	5.0 U	NA	NA	NA	NA	NA	NA	1.0 U	1.0 U	1.0 U	1.0 U	1.0 U	1.0 U	1.0 U	1.0 U	1.0 U
	Chloroform	N/A	2.0 U	4.0 U	1.0 U	NA	5.0 U	NA	NA	NA	NA	NA	NA	1.0 U	1.0 U	1.0 U	1.0 U	1.0 U	1.0 U	1.0 U	1.0 U	1.0 U
	Carbon tetrachloride	N/A	2.0 U	4.0 U	1.0 U	NA	5.0 U	NA	NA	NA	NA	NA	NA	1.0 U	1.0 U	1.0 U	1.0 U	1.0 U	1.0 U	1.0 U	1.0 U	1.0 U
	1,2-Dichloropropane	N/A	2.0 U	4.0 U	1.0 U	NA	5.0 U	NA	NA	NA	NA	NA	NA	1.0 U	1.0 U	1.0 U	1.0 U	1.0 U	1.0 U	1.0 U	1.0 U	1.0 U
	Dibromochloromethane	N/A	2.0 U	4.0 U	1.0 U	NA	5.0 U	NA	NA	NA	NA	NA	NA	1.0 U	1.0 U	1.0 U	1.0 U	1.0 U	1.0 U	1.0 U	1.0 U	1.0 U
	1,1,2-Trichloroethane	N/A	2.0 U	4.0 U	1.0 U	NA	5.0 U	NA	NA	NA	NA	NA	NA	1.0 U	1.0 U	1.0 U	1.0 U	1.0 U	1.0 U	1.0 U	1.0 U	1.0 U
	Tetrachloroethene	N/A	2.0 U	4.0 U	1.0 U	NA	5.0 U	NA	NA	NA	NA	NA	NA	1.0 U	1.0 U	1.0 U	1.0 U	1.0 U	1.0 U	1.0 U	1.0 U	1.0 U
	Chlorobenzene	N/A	2.0 U	4.0 U	1.0 U	NA	5.0 U	NA	NA	NA	NA	NA	NA	1.0 U	1.0 U	1.0 U	1.0 U	1.0 U	1.0 U	1.0 U	1.0 U	1.0 U
	Trichlorofluoromethane	N/A	4.0 U	8.0 U	2.0 U	NA	10 U	NA	NA	NA	NA	NA	NA	2.0 U	2.0 U	2.0 U	2.0 U	2.0 U	2.0 U	2.0 U	2.0 U	2.0 U
	1,2-Dichloroethane	N/A	2.0 U	4.0 U	1.0 U	NA	5.0 U	NA	NA	NA	NA	NA	NA	1.0 U	1.0 U	1.0 U	1.0 U	1.0 U	1.0 U	1.0 U	1.0 U	1.0 U
	1,1,1-Trichloroethane	N/A	2.0 U	4.0 U	1.0 U	NA	5.0 U	NA	NA	NA	NA	NA	NA	1.0 U	1.0 U	1.0 U	1.0 U	1.0 U	1.0 U	1.0 U	1.0 U	1.0 U
	Bromodichloromethane	N/A	2.0 U	4.0 U	1.0 U	NA	5.0 U	NA	NA	NA	NA	NA	NA	1.0 U	1.0 U	1.0 U	1.0 U	1.0 U	1.0 U	1.0 U	1.0 U	1.0 U
	trans-1,3-Dichloropropene	N/A	1.0 U	2.0 U	0.50 U	NA	2.5 U	NA	NA	NA	NA	NA	NA	0.50 U	0.50 U	0.50 U	0.50 U	0.50 U	0.50 U	0.50 U	0.50 U	0.50 U
	cis-1,3-Dichloropropene	N/A	1.0 U	2.0 U	0.50 U	NA	2.5 U	NA	NA	NA	NA	NA	NA	0.50 U	0.50 U	0.50 U	0.50 U	0.50 U	0.50 U	0.50 U	0.50 U	0.50 U
	1,3-Dichloropropene, Total	N/A	NA	NA	NA	NA	NA	NA	NA	NA	NA	NA	NA	NA	NA	NA	NA	NA	NA	NA	NA	NA
	1,1-Dichloropropene	N/A	4.0 U	8.0 U	2.0 U	NA	10 U	NA	NA	NA	NA	NA	NA	2.0 U	2.0 U	2.0 U	2.0 U	2.0 U	2.0 U	2.0 U	2.0 U	2.0 U
	Bromoform	N/A	4.0 U	8.0 U	2.0 U	NA	10 U	NA	NA	NA	NA	NA	NA	2.0 U	2.0 U	2.0 U	2.0 U	2.0 U	2.0 U	2.0 U	2.0 U	2.0 U
	1,1,2,2-Tetrachloroethane	N/A	2.0 U	4.0 U	1.0 U	NA	5.0 U	NA	NA	NA	NA	NA	NA	1.0 U	1.0 U	1.0 U	1.0 U	1.0 U	1.0 U	1.0 U	1.0 U	1.0 U
	Benzene	N/A	1.0 U	2.0 U	0.50 U	NA	2.5 U	NA	NA	NA	NA	NA	NA	0.50 U	0.50 U	0.50 U	0.50 U	0.50 U	0.50 U	0.50 U	0.50 U	0.50 U
	Toluene	N/A	2.0 U	4.0 U	1.0 U	NA	5.0 U	NA	NA	NA	NA	NA	NA	1.0 U	1.0 U	1.0 U	1.0 U	1.0 U	1.0 U	1.0 U	1.0 U	1.0 U
	Ethylbenzene	N/A	2.0 U	4.0 U	1.0 U	NA	5.0 U	NA	NA	NA	NA	NA	NA	1.0 U	1.0 U	1.0 U	1.0 U	1.0 U	1.0 U	1.0 U	1.0 U	1.0 U
	Chloromethane	N/A	4.0 U	8.0 U	2.0 U	NA	10 U	NA	NA	NA	NA	NA	NA	2.0 U	2.0 U	2.0 U	2.0 U	2.0 U	2.0 U	2.0 U	2.0 U	2.0 U
	Bromomethane	N/A	4.0 U	8.0 U	2.0 U	NA	10 U	NA	NA	NA	NA	NA	NA	2.0 U	2.0 U	2.0 U	2.0 U	2.0 U	2.0 U	2.0 U	2.0 U	2.0 U
	Vinyl chloride	N/A	**12**	**5.9**	**3.1**	NA	5.0 U	NA	NA	NA	NA	NA	NA	1.0 U	1.0 U	1.0 U	1.0 U	1.0 U	1.0 U	1.0 U	1.0 U	1.0 U
	Chloroethane	N/A	4.0 U	8.0 U	2.0 U	NA	10 U	NA	NA	NA	NA	NA	NA	2.0 U	2.0 U	2.0 U	2.0 U	2.0 U	2.0 U	2.0 U	2.0 U	2.0 U
	1,1-Dichloroethene	N/A	2.0 U	4.0 U	1.0 U	NA	5.0 U	NA	NA	NA	NA	NA	NA	1.0 U	1.0 U	1.0 U	1.0 U	1.0 U	1.0 U	1.0 U	1.0 U	1.0 U
	trans-1,2-Dichloroethene	N/A	**3.8**	**9.0**	**22**	NA	**86**	NA	NA	NA	NA	NA	NA	1.0 U	1.0 U	1.0 U	1.0 U	1.0 U	1.0 U	1.0 U	1.0 U	1.0 U
	Trichloroethene	N/A	2.0 U	4.0 U	1.0 U	NA	**12**	NA	NA	NA	NA	NA	NA	1.0 U	1.0 U	1.0 U	1.0 U	1.0 U	1.0 U	1.0 U	1.0 U	1.0 U
	1,2-Dichlorobenzene	N/A	2.0 U	4.0 U	1.0 U	NA	5.0 U	NA	NA	NA	NA	NA	NA	1.0 U	1.0 U	1.0 U	1.0 U	1.0 U	1.0 U	1.0 U	1.0 U	1.0 U
	1,3-Dichlorobenzene	N/A	2.0 U	4.0 U	1.0 U	NA	5.0 U	NA	NA	NA	NA	NA	NA	1.0 U	1.0 U	1.0 U	1.0 U	1.0 U	1.0 U	1.0 U	1.0 U	1.0 U
	1,4-Dichlorobenzene	N/A	2.0 U	4.0 U	1.0 U	NA	5.0 U	NA	NA	NA	NA	NA	NA	1.0 U	1.0 U	1.0 U	1.0 U	1.0 U	1.0 U	1.0 U	1.0 U	1.0 U
	Methyl tert butyl ether	N/A	4.0 U	8.0 U	2.0 U	NA	10 U	NA	NA	NA	NA	NA	NA	2.0 U	2.0 U	2.0 U	2.0 U	2.0 U	2.0 U	2.0 U	2.0 U	2.0 U
	p/m-Xylene	N/A	4.0 U	8.0 U	2.0 U	NA	10 U	NA	NA	NA	NA	NA	NA	2.0 U	2.0 U	2.0 U	2.0 U	2.0 U	2.0 U	2.0 U	2.0 U	2.0 U
	o-Xylene	N/A	2.0 U	4.0 U	1.0 U	NA	5.0 U	NA	NA	NA	NA	NA	NA	1.0 U	1.0 U	1.0 U	1.0 U	1.0 U	1.0 U	1.0 U	1.0 U	1.0 U
	Xylene (Total)	N/A	NA	NA	NA	NA	NA	NA	NA	NA	NA	NA	NA	NA	NA	NA	NA	NA	NA	NA	NA	NA
	cis-1,2-Dichloroethene	N/A	**620**	**470**	**380**	NA	**330**	NA	NA	NA	NA	NA	NA	1.0 U	1.0 U	1.0 U	1.0 U	1.0 U	1.0 U	1.0 U	1.0 U	1.0 U
	1,2-Dichloroethene (total)	N/A	NA	NA	NA	NA	NA	NA	NA	NA	NA	NA	NA	NA	NA	NA	NA	NA	NA	NA	NA	NA
	Dibromomethane	N/A	4.0 U	8.0 U	2.0 U	NA	10 U	NA	NA	NA	NA	NA	NA	2.0 U	2.0 U	2.0 U	2.0 U	2.0 U	2.0 U	2.0 U	2.0 U	2.0 U
	1,2,3-Trichloropropane	N/A	4.0 U	8.0 U	2.0 U	NA	10 U	NA	NA	NA	NA	NA	NA	2.0 U	2.0 U	2.0 U	2.0 U	2.0 U	2.0 U	2.0 U	2.0 U	2.0 U
	Styrene	N/A	2.0 U	4.0 U	1.0 U	NA	5.0 U	NA	NA	NA	NA	NA	NA	1.0 U	1.0 U	1.0 U	1.0 U	1.0 U	1.0 U	1.0 U	1.0 U	1.0 U
	Dichlorodifluoromethane	N/A	4.0 U	8.0 U	2.0 U	NA	10 U	NA	NA	NA	NA	NA	NA	2.0 U	2.0 U	2.0 U	2.0 U	2.0 U	2.0 U	2.0 U	2.0 U	2.0 U
	Acetone	N/A	10 U	20 U	5.0 U	NA	25 U	NA	NA	NA	NA	NA	NA	**98**	**17.0**	5.0 U	5.0 U	5.0 U	5.0 U	5.0 U	5.0 U	5.0 U
	Carbon disulfide	N/A	4.0 U	8.0 U	2.0 U	NA	10 U	NA	NA	NA	NA	NA	NA	2.0 U	2.0 U	2.0 U	2.0 U	2.0 U	2.0 U	2.0 U	2.0 U	2.0 U
	2-Butanone	N/A	10 U	20 U	5.0 U	NA	25 U	NA	NA	NA	NA	NA	NA	**6.8**	5.0 U	5.0 U	5.0 U	5.0 U	5.0 U	5.0 U	5.0 U	5.0 U

Table 5
Summary of Hydraulic Control System Results for Water Samples
2012 through 2015
New Bedford High School
New Bedford, Massachusetts

Analysis	Analyte	Sample Port:	SP-6											SP-7								
		Sample ID:	INTRA-CARBON	INTRA-CARBON	INTRA-CARBON	INTRA-CARBON	INTRA-CARBON	INTRA-CARBON	INTRA-CARBON	INTRA-CARBON	INTRA-CARBON	INTRA-CARBON	INTRA-CARBON	EFFLUENT	EFFLUENT	EFFLUENT	EFFLUENT	EFFLUENT	EFFLUENT	EFFLUENT	EFFLUENT	EFFLUENT
		Filter Size (micron)^	N/A	N/A	N/A	N/A	N/A	N/A	N/A	N/A	N/A	N/A	N/A	N/A	N/A	N/A	N/A	N/A	N/A	N/A	N/A	N/A
		Sample Date:	1/15/2013	2/15/2013	3/13/2013	4/16/2013	5/16/2013	6/18/2013	7/30/2013	8/20/2013	9/16/2013	10/15/2013	11/15/2013	3/20/2012	3/27/2012	4/3/2012	4/10/2012	4/17/2012	5/14/2012	6/11/2012	7/16/2012	8/21/2012
		Limits*																				
	4-Methyl-2-pentanone	N/A	10 U	20 U	5.0 U	NA	25 U	NA	NA	NA	NA	NA	NA	5.0 U	5.0 U	5.0 U	5.0 U	5.0 U	5.0 U	5.0 U	5.0 U	5.0 U
	2-Hexanone	N/A	10 U	20 U	5.0 U	NA	25 U	NA	NA	NA	NA	NA	NA	5.0 U	5.0 U	5.0 U	5.0 U	5.0 U	5.0 U	5.0 U	5.0 U	5.0 U
	Bromochloromethane	N/A	4.0 U	8.0 U	2.0 U	NA	10 U	NA	NA	NA	NA	NA	NA	2.0 U	2.0 U	2.0 U	2.0 U	2.0 U	2.0 U	2.0 U	2.0 U	2.0 U
	Tetrahydrofuran	N/A	10 U	20 U	5.0 U	NA	10 U	NA	NA	NA	NA	NA	NA	**11.0**	**14.0**	**14.0**	**17.0**	**16.0**	**8.9**	**8.5**	**9.0**	**5.8**
	2,2-Dichloropropane	N/A	4.0 U	8.0 U	2.0 U	NA	10 U	NA	NA	NA	NA	NA	NA	2.0 U	2.0 U	2.0 U	2.0 U	2.0 U	2.0 U	2.0 U	2.0 U	2.0 U
	1,2-Dibromoethane	N/A	4.0 U	8.0 U	2.0 U	NA	10 U	NA	NA	NA	NA	NA	NA	2.0 U	2.0 U	2.0 U	2.0 U	2.0 U	2.0 U	2.0 U	2.0 U	2.0 U
	1,3-Dichloropropane	N/A	4.0 U	8.0 U	2.0 U	NA	10 U	NA	NA	NA	NA	NA	NA	2.0 U	2.0 U	2.0 U	2.0 U	2.0 U	2.0 U	2.0 U	2.0 U	2.0 U
	1,1,1,2-Tetrachloroethane	N/A	2.0 U	4.0 U	1.0 U	NA	5.0 U	NA	NA	NA	NA	NA	NA	1.0 U	1.0 U	1.0 U	1.0 U	1.0 U	1.0 U	1.0 U	1.0 U	1.0 U
	Bromobenzene	N/A	4.0 U	8.0 U	2.0 U	NA	10 U	NA	NA	NA	NA	NA	NA	2.0 U	2.0 U	2.0 U	2.0 U	2.0 U	2.0 U	2.0 U	2.0 U	2.0 U
	n-Butylbenzene	N/A	4.0 U	8.0 U	2.0 U	NA	10 U	NA	NA	NA	NA	NA	NA	2.0 U	2.0 U	2.0 U	2.0 U	2.0 U	2.0 U	2.0 U	2.0 U	2.0 U
	sec-Butylbenzene	N/A	4.0 U	8.0 U	2.0 U	NA	10 U	NA	NA	NA	NA	NA	NA	2.0 U	2.0 U	2.0 U	2.0 U	2.0 U	2.0 U	2.0 U	2.0 U	2.0 U
	tert-Butylbenzene	N/A	4.0 U	8.0 U	2.0 U	NA	10 U	NA	NA	NA	NA	NA	NA	2.0 U	2.0 U	2.0 U	2.0 U	2.0 U	2.0 U	2.0 U	2.0 U	2.0 U
	o-Chlorotoluene	N/A	4.0 U	8.0 U	2.0 U	NA	10 U	NA	NA	NA	NA	NA	NA	2.0 U	2.0 U	2.0 U	2.0 U	2.0 U	2.0 U	2.0 U	2.0 U	2.0 U
	p-Chlorotoluene	N/A	4.0 U	8.0 U	2.0 U	NA	10 U	NA	NA	NA	NA	NA	NA	2.0 U	2.0 U	2.0 U	2.0 U	2.0 U	2.0 U	2.0 U	2.0 U	2.0 U
	1,2-Dibromo-3-chloropropane	N/A	4.0 U	8.0 U	2.0 U	NA	10 U	NA	NA	NA	NA	NA	NA	2.0 U	2.0 U	2.0 U	2.0 U	2.0 U	2.0 U	2.0 U	2.0 U	2.0 U
	Hexachlorobutadiene	N/A	1.2 U	2.4 U	0.60 U	NA	3.0 U	NA	NA	NA	NA	NA	NA	0.60 U	0.60 U	0.60 U	0.60 U	0.60 U	0.60 U	0.60 U	0.60 U	0.60 U
	Isopropylbenzene	N/A	4.0 U	8.0 U	2.0 U	NA	10 U	NA	NA	NA	NA	NA	NA	2.0 U	2.0 U	2.0 U	2.0 U	2.0 U	2.0 U	2.0 U	2.0 U	2.0 U
	p-Isopropyltoluene	N/A	4.0 U	8.0 U	2.0 U	NA	10 U	NA	NA	NA	NA	NA	NA	2.0 U	2.0 U	2.0 U	2.0 U	2.0 U	2.0 U	2.0 U	2.0 U	2.0 U
	Naphthalene	N/A	4.0 U	8.0 U	2.0 U	NA	10 U	NA	NA	NA	NA	NA	NA	2.0 U	2.0 U	2.0 U	2.0 U	2.0 U	2.0 U	2.0 U	2.0 U	2.0 U
	n-Propylbenzene	N/A	4.0 U	8.0 U	2.0 U	NA	10 U	NA	NA	NA	NA	NA	NA	2.0 U	2.0 U	2.0 U	2.0 U	2.0 U	2.0 U	2.0 U	2.0 U	2.0 U
	1,2,3-Trichlorobenzene	N/A	4.0 U	8.0 U	2.0 U	NA	10 U	NA	NA	NA	NA	NA	NA	2.0 U	2.0 U	2.0 U	2.0 U	2.0 U	2.0 U	2.0 U	2.0 U	2.0 U
	1,2,4-Trichlorobenzene	N/A	4.0 U	8.0 U	2.0 U	NA	10 U	NA	NA	NA	NA	NA	NA	2.0 U	2.0 U	2.0 U	2.0 U	2.0 U	2.0 U	2.0 U	2.0 U	2.0 U
	1,3,5-Trimethylbenzene	N/A	4.0 U	8.0 U	2.0 U	NA	10 U	NA	NA	NA	NA	NA	NA	2.0 U	2.0 U	2.0 U	2.0 U	2.0 U	2.0 U	2.0 U	2.0 U	2.0 U
	1,2,4-Trimethylbenzene	N/A	4.0 U	8.0 U	2.0 U	NA	10 U	NA	NA	NA	NA	NA	NA	2.0 U	2.0 U	2.0 U	2.0 U	2.0 U	2.0 U	2.0 U	2.0 U	2.0 U
	Ethyl ether	N/A	4.0 U	8.0 U	2.0 U	NA	10 U	NA	NA	NA	NA	NA	NA	2.0 U	2.0 U	2.0 U	2.0 U	2.0 U	2.0 U	2.0 U	2.0 U	2.0 U
	Isopropyl Ether	N/A	4.0 U	8.0 U	2.0 U	NA	10 U	NA	NA	NA	NA	NA	NA	2.0 U	2.0 U	2.0 U	2.0 U	2.0 U	2.0 U	2.0 U	2.0 U	2.0 U
	Ethyl-Tert-Butyl-Ether	N/A	4.0 U	8.0 U	2.0 U	NA	10 U	NA	NA	NA	NA	NA	NA	2.0 U	2.0 U	2.0 U	2.0 U	2.0 U	2.0 U	2.0 U	2.0 U	2.0 U
	Tertiary-Amyl Methyl Ether	N/A	4.0 U	8.0 U	2.0 U	NA	10 U	NA	NA	NA	NA	NA	NA	2.0 U	2.0 U	2.0 U	2.0 U	2.0 U	2.0 U	2.0 U	2.0 U	2.0 U
	1,4-Dioxane	N/A	500 U	1,000 U	250 U	NA	1,200 U	NA	NA	NA	NA	NA	NA	250 U	250 U	250 U	250 U	250 U	250 U	250 U	250 U	250 U
VOCs - TICs																						
(ug/L)	Sulfur Dioxide	N/A	NA	NA	NA	NA	NA	NA	NA	NA	NA	NA	NA	NA	NA	NA	NA	NA	NA	NA	NA	NA
	Unknown aldehyde	N/A	NA	NA	NA	NA	NA	NA	NA	NA	NA	NA	NA	NA	NA	NA	NA	NA	NA	NA	NA	NA
	Unknown Substituted Alkanes	N/A	NA	NA	NA	NA	NA	NA	NA	NA	NA	NA	NA	NA	NA	NA	NA	NA	NA	NA	NA	NA
	Unknown Substituted Alkenes	N/A	NA	NA	NA	NA	NA	NA	NA	NA	NA	NA	NA	NA	NA	NA	NA	NA	NA	NA	NA	NA
	Unknown	N/A	NA	NA	NA	NA	NA	NA	NA	NA	NA	NA	NA	NA	NA	NA	NA	NA	NA	NA	NA	NA
PCBs																						
(ug/L)	Aroclor 1016	N/A	0.250 U	0.250 U	0.250 U	0.250 U	0.250 U	0.250 U	0.250 U	0.250 U	0.250 U	0.250 U	0.250 U	0.250 U	0.250 U	0.250 U	0.252 U	0.250 U	0.250 U	0.248 U	0.250 U	0.250 U
	Aroclor 1221	N/A	0.250 U	0.250 U	0.250 U	0.250 U	0.250 U	0.250 U	0.250 U	0.250 U	0.250 U	0.250 U	0.250 U	0.250 U	0.250 U	0.250 U	0.252 U	0.250 U	0.250 U	0.248 U	0.250 U	0.250 U
	Aroclor 1232	N/A	0.250 U	0.250 U	0.250 U	0.250 U	0.250 U	0.250 U	0.250 U	0.250 U	0.250 U	0.250 U	0.250 U	0.250 U	0.250 U	0.250 U	0.252 U	0.250 U	0.250 U	0.248 U	0.250 U	0.250 U
	Aroclor 1242	N/A	0.250 U	0.250 U	0.250 U	0.250 U	0.250 U	0.250 U	0.250 U	0.250 U	0.250 U	0.250 U	0.250 U	0.250 U	0.250 U	0.250 U	0.252 U	0.250 U	0.250 U	0.248 U	0.250 U	0.250 U
	Aroclor 1248	N/A	0.250 U	0.250 U	0.250 U	0.250 U	0.250 U	0.250 U	0.250 U	0.250 U	0.250 U	0.250 U	0.250 U	0.250 U	0.250 U	0.250 U	0.252 U	0.250 U	0.250 U	0.248 U	0.250 U	0.250 U
	Aroclor 1254	N/A	0.250 U	0.250 U	0.250 U	0.250 U	0.250 U	0.250 U	0.250 U	0.250 U	0.250 U	0.250 U	0.250 U	0.250 U	0.250 U	0.250 U	0.252 U	0.250 U	0.250 U	0.248 U	0.250 U	0.250 U
	Aroclor 1260	N/A	0.250 U	0.250 U	0.250 U	0.250 U	0.250 U	0.250 U	0.250 U	0.250 U	0.250 U	0.250 U	0.250 U	0.250 U	0.250 U	0.250 U	0.252 U	0.250 U	0.250 U	0.248 U	0.250 U	0.250 U
	Aroclor 1262	N/A	0.250 U	0.250 U	0.250 U	0.250 U	0.250 U	0.250 U	0.250 U	0.250 U	0.250 U	0.250 U	0.250 U	0.250 U	0.250 U	0.250 U	0.252 U	0.250 U	0.250 U	0.248 U	0.250 U	0.250 U
	Aroclor 1268	N/A	0.250 U	0.250 U	0.250 U	0.250 U	0.250 U	0.250 U	0.250 U	0.250 U	0.250 U	0.250 U	0.250 U	0.250 U	0.250 U	0.250 U	0.252 U	0.250 U	0.250 U	0.248 U	0.250 U	0.250 U
	Total PCBs	5	0.250 U	0.250 U	0.250 U	0.250 U	0.250 U	0.250 U	0.250 U	0.250 U	0.250 U	0.250 U	0.250 U	0.250 U	0.250 U	0.250 U	0.252 U	0.250 U	0.250 U	0.248 U	0.250 U	0.250 U
Total Petroleum Hydrocarbons																						
(ug/L)	TPH	N/A	NA	NA	NA	NA	NA	NA	NA	NA	NA	NA	NA	NA	NA	NA	NA	NA	NA	NA	NA	NA

Notes:
ug/L - micrograms per liter.
NJ - Presumptive evidence of compound.
J - Estimated value.
NA - Sample not analyzed for the listed analyte.
N/A - Not applicable.
U - Compound was not detected at specified quantitation limit.
Values in **Bold** indicate the compound was detected.
VOCs - Volatile Organic Compounds.
PCBs - Polychlorinated Biphenyls.
TICs - Tentatively identified compounds.
* - City of New Bedford Industrial Discharge Permit number S-123.
^ - 0.45 micron filtration done in field; 0.20 and 2.0 micron filtration performed in la

Table 5
Summary of Hydraulic Control System Results for Water Samples
2012 through 2015
New Bedford High School
New Bedford, Massachusetts

Analysis	Analyte	Sample Port:	SP-7																
		Sample ID:	EFFLUENT	EFFLUENT	EFFLUENT	EFFLUENT	EFFLUENT	EFFLUENT	EFFLUENT	EFFLUENT	EFFLUENT	EFFLUENT	EFFLUENT	EFFLUENT	EFFLUENT	EFFLUENT	EFFLUENT	EFFLUENT	EFFLUENT
		Filter Size (micron)^:	N/A	N/A	N/A	N/A	N/A	N/A	N/A	N/A	N/A	N/A	N/A	N/A	N/A	N/A	N/A	N/A	N/A
		Sample Date:	9/18/2012	10/18/2012	11/21/2012	12/12/2012	1/15/2013	2/15/2013	3/13/2013	4/16/2013	5/16/2013	6/18/2013	7/30/2013	8/20/2013	9/16/2013	10/15/2013	11/15/2013	12/17/2013	1/16/2014
		Limits*																	
VOCs																			
(ug/L)	Methylene chloride	N/A	2.0 U	2.0 U	2.0 U	2.0 U	2.0 U	2.0 U	2.0 U	2.0 U	2.0 U	2.0 U	2.0 U	2.0 U	10.0 U	10.0 U	2.0 U	4.0 U	10.0 U
	1,1-Dichloroethane	N/A	1.0 U	1.0 U	1.0 U	1.0 U	1.0 U	1.0 U	1.0 U	1.0 U	1.0 U	1.0 U	1.0 U	1.0 U	5.0 U	5.0 U	1.0 U	2.0 U	5.0 U
	Chloroform	N/A	1.0 U	1.0 U	1.0 U	1.0 U	1.0 U	1.0 U	1.0 U	1.0 U	1.0 U	1.0 U	1.0 U	1.0 U	5.0 U	5.0 U	1.0 U	2.0 U	5.0 U
	Carbon tetrachloride	N/A	1.0 U	1.0 U	1.0 U	1.0 U	1.0 U	1.0 U	1.0 U	1.0 U	1.0 U	1.0 U	1.0 U	1.0 U	5.0 U	5.0 U	1.0 U	2.0 U	5.0 U
	1,2-Dichloropropane	N/A	1.0 U	1.0 U	1.0 U	1.0 U	1.0 U	1.0 U	1.0 U	1.0 U	1.0 U	1.0 U	1.0 U	1.0 U	5.0 U	5.0 U	1.0 U	2.0 U	5.0 U
	Dibromochloromethane	N/A	1.0 U	1.0 U	1.0 U	1.0 U	1.0 U	1.0 U	1.0 U	1.0 U	1.0 U	1.0 U	1.0 U	1.0 U	5.0 U	5.0 U	1.0 U	2.0 U	5.0 U
	1,1,2-Trichloroethane	N/A	1.0 U	1.0 U	1.0 U	1.0 U	1.0 U	1.0 U	1.0 U	1.0 U	1.0 U	1.0 U	1.0 U	1.0 U	5.0 U	5.0 U	1.0 U	2.0 U	5.0 U
	Tetrachloroethene	N/A	1.0 U	1.0 U	1.0 U	1.0 U	1.0 U	1.0 U	1.0 U	1.0 U	1.0 U	1.0 U	1.0 U	1.0 U	5.0 U	5.0 U	1.0 U	2.0 U	5.0 U
	Chlorobenzene	N/A	1.0 U	1.0 U	1.0 U	1.0 U	1.0 U	1.0 U	1.0 U	1.0 U	1.0 U	1.0 U	1.0 U	1.0 U	5.0 U	5.0 U	1.0 U	2.0 U	5.0 U
	Trichlorofluoromethane	N/A	2.0 U	2.0 U	2.0 U	2.0 U	2.0 U	2.0 U	2.0 U	2.0 U	2.0 U	2.0 U	2.0 U	2.0 U	10.0 U	10.0 U	2.0 U	4.0 U	10.0 U
	1,2-Dichloroethane	N/A	1.0 U	1.0 U	1.0 U	1.0 U	1.0 U	1.0 U	1.0 U	1.0 U	1.0 U	1.0 U	1.0 U	1.0 U	5.0 U	5.0 U	1.0 U	2.0 U	5.0 U
	1,1,1-Trichloroethane	N/A	1.0 U	1.0 U	1.0 U	1.0 U	1.0 U	1.0 U	1.0 U	1.0 U	1.0 U	1.0 U	1.0 U	1.0 U	5.0 U	5.0 U	1.0 U	2.0 U	5.0 U
	Bromodichloromethane	N/A	1.0 U	1.0 U	1.0 U	1.0 U	1.0 U	1.0 U	1.0 U	1.0 U	1.0 U	1.0 U	1.0 U	1.0 U	5.0 U	5.0 U	1.0 U	2.0 U	5.0 U
	trans-1,3-Dichloropropene	N/A	0.50 U	0.50 U	0.50 U	0.50 U	0.50 U	0.50 U	0.50 U	0.50 U	0.50 U	0.50 U	0.50 U	0.50 U	2.5 U	2.5 U	0.50 U	1.0 U	2.5 U
	cis-1,3-Dichloropropene	N/A	0.50 U	0.50 U	0.50 U	0.50 U	0.50 U	0.50 U	0.50 U	0.50 U	0.50 U	0.50 U	0.50 U	0.50 U	2.5 U	2.5 U	0.50 U	1.0 U	2.5 U
	1,3-Dichloropropene, Total	N/A	NA	NA	NA	NA	NA	NA	NA	NA	NA	NA	NA	NA	NA	NA	NA	NA	NA
	1,1-Dichloropropene	N/A	2.0 U	2.0 U	2.0 U	2.0 U	2.0 U	2.0 U	2.0 U	2.0 U	2.0 U	2.0 U	2.0 U	2.0 U	10.0 U	10.0 U	2.0 U	4.0 U	10.0 U
	Bromoform	N/A	2.0 U	2.0 U	2.0 U	2.0 U	2.0 U	2.0 U	2.0 U	2.0 U	2.0 U	2.0 U	2.0 U	2.0 U	10.0 U	10.0 U	2.0 U	4.0 U	10.0 U
	1,1,2,2-Tetrachloroethane	N/A	1.0 U	1.0 U	1.0 U	1.0 U	1.0 U	1.0 U	1.0 U	1.0 U	1.0 U	1.0 U	1.0 U	1.0 U	5.0 U	5.0 U	1.0 U	2.0 U	5.0 U
	Benzene	N/A	0.50 U	0.50 U	0.50 U	0.50 U	0.50 U	0.50 U	0.50 U	0.50 U	0.50 U	0.50 U	0.50 U	**0.58**	2.5 U	2.5 U	0.50 U	1.0 U	2.5 U
	Toluene	N/A	1.0 U	1.0 U	1.0 U	1.0 U	1.0 U	1.0 U	1.0 U	1.0 U	1.0 U	1.0 U	1.0 U	1.0 U	5.0 U	5.0 U	1.0 U	2.0 U	5.0 U
	Ethylbenzene	N/A	1.0 U	1.0 U	1.0 U	1.0 U	1.0 U	1.0 U	1.0 U	1.0 U	1.0 U	1.0 U	1.0 U	1.0 U	5.0 U	5.0 U	1.0 U	2.0 U	5.0 U
	Chloromethane	N/A	2.0 U	2.0 U	2.0 U	2.0 U	2.0 U	2.0 U	2.0 U	2.0 U	2.0 U	2.0 U	2.0 U	2.0 U	10.0 U	10.0 U	2.0 U	4.0 U	10.0 U
	Bromomethane	N/A	2.0 U	2.0 U	2.0 U	2.0 U	2.0 U	2.0 U	2.0 U	2.0 U	2.0 U	2.0 U	2.0 U	2.0 U	10.0 U	10.0 U	2.0 U	4.0 U	10.0 U
	Vinyl chloride	N/A	**8.8**	**66**	**99**	**85**	**61**	**25**	**14**	**4.8**	**3.4**	**2.0**	1.0 U	1.0 U	5.0 U	5.0 U	1.0 U	2.0 U	5.0 U
	Chloroethane	N/A	2.0 U	2.0 U	2.0 U	2.0 U	2.0 U	2.0 U	2.0 U	2.0 U	2.0 U	2.0 U	2.0 U	2.0 U	10.0 U	10.0 U	2.0 U	4.0 U	10.0 U
	1,1-Dichloroethene	N/A	1.0 U	1.0 U	1.0 U	1.0 U	1.0 U	1.0 U	1.0 U	1.0 U	1.0 U	1.0 U	1.0 U	1.0 U	5.0 U	5.0 U	1.0 U	2.0 U	5.0 U
	trans-1,2-Dichloroethene	N/A	1.0 U	1.0 U	1.0 U	1.0 U	1.0 U	1.0 U	1.0 U	1.0 U	**1.8**	**5.1**	**5.2**	**7.2**	**8.6**	**12**	**14**	**13**	**18**
	Trichloroethene	N/A	1.0 U	1.0 U	1.0 U	1.0 U	1.0 U	1.0 U	1.0 U	1.0 U	1.0 U	1.0 U	1.0 U	1.0 U	5.0 U	5.0 U	1.0 U	2.0 U	5.0 U
	1,2-Dichlorobenzene	N/A	1.0 U	1.0 U	1.0 U	1.0 U	1.0 U	1.0 U	1.0 U	1.0 U	1.0 U	1.0 U	1.0 U	1.0 U	5.0 U	5.0 U	1.0 U	2.0 U	5.0 U
	1,3-Dichlorobenzene	N/A	1.0 U	1.0 U	1.0 U	1.0 U	1.0 U	1.0 U	1.0 U	1.0 U	1.0 U	1.0 U	1.0 U	1.0 U	5.0 U	5.0 U	1.0 U	2.0 U	5.0 U
	1,4-Dichlorobenzene	N/A	1.0 U	1.0 U	1.0 U	1.0 U	1.0 U	1.0 U	1.0 U	1.0 U	1.0 U	1.0 U	1.0 U	1.0 U	5.0 U	5.0 U	1.0 U	2.0 U	5.0 U
	Methyl tert butyl ether	N/A	2.0 U	2.0 U	2.0 U	2.0 U	2.0 U	2.0 U	2.0 U	2.0 U	2.0 U	2.0 U	2.0 U	2.0 U	10.0 U	10.0 U	2.0 U	4.0 U	10.0 U
	p/m-Xylene	N/A	2.0 U	2.0 U	2.0 U	2.0 U	2.0 U	2.0 U	2.0 U	2.0 U	2.0 U	2.0 U	2.0 U	2.0 U	10.0 U	10.0 U	2.0 U	4.0 U	10.0 U
	o-Xylene	N/A	1.0 U	1.0 U	1.0 U	1.0 U	1.0 U	1.0 U	1.0 U	1.0 U	1.0 U	1.0 U	1.0 U	1.0 U	5.0 U	5.0 U	1.0 U	2.0 U	5.0 U
	Xylene (Total)	N/A	NA	NA	NA	NA	NA	NA	NA	NA	NA	NA	NA	NA	NA	NA	NA	NA	NA
	cis-1,2-Dichloroethene	N/A	1.0 U	1.0 U	1.0 U	1.0 U	1.0 U	1.0 U	**1.8**	**130**	**300**	**440**	**360**	**290**	**260**	**240**	**280**	**190**	**230**
	1,2-Dichloroethene (total)	N/A	NA	NA	NA	NA	NA	NA	NA	NA	NA	NA	NA	NA	NA	NA	NA	NA	NA
	Dibromomethane	N/A	2.0 U	2.0 U	2.0 U	2.0 U	2.0 U	2.0 U	2.0 U	2.0 U	2.0 U	2.0 U	2.0 U	2.0 U	10.0 U	10.0 U	2.0 U	4.0 U	10.0 U
	1,2,3-Trichloropropane	N/A	2.0 U	2.0 U	2.0 U	2.0 U	2.0 U	2.0 U	2.0 U	2.0 U	2.0 U	2.0 U	2.0 U	2.0 U	10.0 U	10.0 U	2.0 U	4.0 U	10.0 U
	Styrene	N/A	1.0 U	1.0 U	1.0 U	1.0 U	1.0 U	1.0 U	1.0 U	1.0 U	1.0 U	1.0 U	1.0 U	1.0 U	5.0 U	5.0 U	1.0 U	2.0 U	5.0 U
	Dichlorodifluoromethane	N/A	2.0 U	2.0 U	2.0 U	2.0 U	2.0 U	2.0 U	2.0 U	2.0 U	2.0 U	2.0 U	2.0 U	2.0 U	10.0 U	10.0 U	2.0 U	4.0 U	10.0 U
	Acetone	N/A	5.0 U	5.0 U	5.0 U	5.0 U	5.0 U	5.0 U	5.0 U	5.0 U	5.0 U	5.0 U	5.0 U	5.0 U	25.0 U	25.0 U	5.0 U	10 U	25 U
	Carbon disulfide	N/A	2.0 U	2.0 U	2.0 U	2.0 U	2.0 U	2.0 U	2.0 U	2.0 U	2.0 U	2.0 U	2.0 U	2.0 U	10.0 U	10.0 U	2.0 U	4.0 U	10.0 U
	2-Butanone	N/A	5.0 U	5.0 U	5.0 U	5.0 U	5.0 U	5.0 U	5.0 U	5.0 U	5.0 U	5.0 U	5.0 U	5.0 U	25.0 U	25.0 U	5.0 U	10 U	25 U

Table 5
Summary of Hydraulic Control System Results for Water Samples
2012 through 2015
New Bedford High School
New Bedford, Massachusetts

Analysis	Analyte	Sample Port:	SP-7																
		Sample ID:	EFFLUENT	EFFLUENT	EFFLUENT	EFFLUENT	EFFLUENT	EFFLUENT	EFFLUENT	EFFLUENT	EFFLUENT	EFFLUENT	EFFLUENT	EFFLUENT	EFFLUENT	EFFLUENT	EFFLUENT	EFFLUENT	EFFLUENT
		Filter Size (micron)^:	N/A	N/A	N/A	N/A	N/A	N/A	N/A	N/A	N/A	N/A	N/A	N/A	N/A	N/A	N/A	N/A	N/A
		Sample Date:	9/18/2012	10/18/2012	11/21/2012	12/12/2012	1/15/2013	2/15/2013	3/13/2013	4/16/2013	5/16/2013	6/18/2013	7/30/2013	8/20/2013	9/16/2013	10/15/2013	11/15/2013	12/17/2013	1/16/2014
		Limits*																	
	4-Methyl-2-pentanone	N/A	5.0 U	5.0 U	5.0 U	5.0 U	5.0 U	5.0 U	5.0 U	5.0 U	5.0 U	5.0 U	5.0 U	5.0 U	25.0 U	25.0 U	5.0 U	10 U	25 U
	2-Hexanone	N/A	5.0 U	5.0 U	5.0 U	5.0 U	5.0 U	5.0 U	5.0 U	5.0 U	5.0 U	5.0 U	5.0 U	5.0 U	25.0 U	25.0 U	5.0 U	10 U	25 U
	Bromochloromethane	N/A	2.0 U	2.0 U	2.0 U	2.0 U	2.0 U	2.0 U	2.0 U	2.0 U	2.0 U	2.0 U	2.0 U	2.0 U	10.0 U	10.0 U	2.0 U	4.0 U	10.0 U
	Tetrahydrofuran	N/A	5.0 U	**12**	**8.8**	**6.5**	5.0 U	**5.1**	**6.6**	5.0 U	2.0 U	**5.1**	2.0 U	**3.8**	10.0 U	10.0 U	2.0 U	4.0 U	**48.0**
	2,2-Dichloropropane	N/A	2.0 U	2.0 U	2.0 U	2.0 U	2.0 U	2.0 U	2.0 U	2.0 U	2.0 U	2.0 U	2.0 U	2.0 U	10.0 U	10.0 U	2.0 U	4.0 U	10.0 U
	1,2-Dibromoethane	N/A	2.0 U	2.0 U	2.0 U	2.0 U	2.0 U	2.0 U	2.0 U	2.0 U	2.0 U	2.0 U	2.0 U	2.0 U	10.0 U	10.0 U	2.0 U	4.0 U	10.0 U
	1,3-Dichloropropane	N/A	2.0 U	2.0 U	2.0 U	2.0 U	2.0 U	2.0 U	2.0 U	2.0 U	2.0 U	2.0 U	2.0 U	2.0 U	10.0 U	10.0 U	2.0 U	4.0 U	10.0 U
	1,1,1,2-Tetrachloroethane	N/A	1.0 U	1.0 U	1.0 U	1.0 U	1.0 U	1.0 U	1.0 U	1.0 U	1.0 U	1.0 U	1.0 U	1.0 U	5.0 U	5.0 U	1.0 U	2.0 U	5.0 U
	Bromobenzene	N/A	2.0 U	2.0 U	2.0 U	2.0 U	2.0 U	2.0 U	2.0 U	2.0 U	2.0 U	2.0 U	2.0 U	2.0 U	10.0 U	10.0 U	2.0 U	4.0 U	10.0 U
	n-Butylbenzene	N/A	2.0 U	2.0 U	2.0 U	2.0 U	2.0 U	2.0 U	2.0 U	2.0 U	2.0 U	2.0 U	2.0 U	2.0 U	10.0 U	10.0 U	2.0 U	4.0 U	10.0 U
	sec-Butylbenzene	N/A	2.0 U	2.0 U	2.0 U	2.0 U	2.0 U	2.0 U	2.0 U	2.0 U	2.0 U	2.0 U	2.0 U	2.0 U	10.0 U	10.0 U	2.0 U	4.0 U	10.0 U
	tert-Butylbenzene	N/A	2.0 U	2.0 U	2.0 U	2.0 U	2.0 U	2.0 U	2.0 U	2.0 U	2.0 U	2.0 U	2.0 U	2.0 U	10.0 U	10.0 U	2.0 U	4.0 U	10.0 U
	o-Chlorotoluene	N/A	2.0 U	2.0 U	2.0 U	2.0 U	2.0 U	2.0 U	2.0 U	2.0 U	2.0 U	2.0 U	2.0 U	2.0 U	10.0 U	10.0 U	2.0 U	4.0 U	10.0 U
	p-Chlorotoluene	N/A	2.0 U	2.0 U	2.0 U	2.0 U	2.0 U	2.0 U	2.0 U	2.0 U	2.0 U	2.0 U	2.0 U	2.0 U	10.0 U	10.0 U	2.0 U	4.0 U	10.0 U
	1,2-Dibromo-3-chloropropane	N/A	2.0 U	2.0 U	2.0 U	2.0 U	2.0 U	2.0 U	2.0 U	2.0 U	2.0 U	2.0 U	2.0 U	2.0 U	10.0 U	10.0 U	2.0 U	4.0 U	10.0 U
	Hexachlorobutadiene	N/A	0.60 U	0.60 U	0.60 U	0.60 U	0.60 U	0.60 U	0.60 U	0.60 U	0.60 U	0.60 U	0.60 U	0.60 U	3.0 U	3.0 U	0.60 U	1.2 U	3.0 U
	Isopropylbenzene	N/A	2.0 U	2.0 U	2.0 U	2.0 U	2.0 U	2.0 U	2.0 U	2.0 U	2.0 U	2.0 U	2.0 U	2.0 U	10.0 U	10.0 U	2.0 U	4.0 U	10.0 U
	p-Isopropyltoluene	N/A	2.0 U	2.0 U	2.0 U	2.0 U	2.0 U	2.0 U	2.0 U	2.0 U	2.0 U	2.0 U	2.0 U	2.0 U	10.0 U	10.0 U	2.0 U	4.0 U	10.0 U
	Naphthalene	N/A	2.0 U	2.0 U	2.0 U	2.0 U	2.0 U	2.0 U	2.0 U	2.0 U	2.0 U	2.0 U	2.0 U	2.0 U	10.0 U	10.0 U	2.0 U	4.0 U	10.0 U
	n-Propylbenzene	N/A	2.0 U	2.0 U	2.0 U	2.0 U	2.0 U	2.0 U	2.0 U	2.0 U	2.0 U	2.0 U	2.0 U	2.0 U	10.0 U	10.0 U	2.0 U	4.0 U	10.0 U
	1,2,3-Trichlorobenzene	N/A	2.0 U	2.0 U	2.0 U	2.0 U	2.0 U	2.0 U	2.0 U	2.0 U	2.0 U	2.0 U	2.0 U	2.0 U	10.0 U	10.0 U	2.0 U	4.0 U	10.0 U
	1,2,4-Trichlorobenzene	N/A	2.0 U	2.0 U	2.0 U	2.0 U	2.0 U	2.0 U	2.0 U	2.0 U	2.0 U	2.0 U	2.0 U	2.0 U	10.0 U	10.0 U	2.0 U	4.0 U	10.0 U
	1,3,5-Trimethylbenzene	N/A	2.0 U	2.0 U	2.0 U	2.0 U	2.0 U	2.0 U	2.0 U	2.0 U	2.0 U	2.0 U	2.0 U	2.0 U	10.0 U	10.0 U	2.0 U	4.0 U	10.0 U
	1,2,4-Trimethylbenzene	N/A	2.0 U	2.0 U	2.0 U	2.0 U	2.0 U	2.0 U	2.0 U	2.0 U	2.0 U	2.0 U	2.0 U	2.0 U	10.0 U	10.0 U	2.0 U	4.0 U	10.0 U
	Ethyl ether	N/A	2.0 U	2.0 U	2.0 U	2.0 U	2.0 U	2.0 U	2.0 U	2.0 U	2.0 U	2.0 U	2.0 U	2.0 U	10.0 U	10.0 U	2.0 U	4.0 U	10.0 U
	Isopropyl Ether	N/A	2.0 U	2.0 U	2.0 U	2.0 U	2.0 U	2.0 U	2.0 U	2.0 U	2.0 U	2.0 U	2.0 U	2.0 U	10.0 U	10.0 U	2.0 U	4.0 U	10.0 U
	Ethyl-Tert-Butyl-Ether	N/A	2.0 U	2.0 U	2.0 U	2.0 U	2.0 U	2.0 U	2.0 U	2.0 U	2.0 U	2.0 U	2.0 U	2.0 U	10.0 U	10.0 U	2.0 U	4.0 U	10.0 U
	Tertiary-Amyl Methyl Ether	N/A	2.0 U	2.0 U	2.0 U	2.0 U	2.0 U	2.0 U	2.0 U	2.0 U	2.0 U	2.0 U	2.0 U	2.0 U	10.0 U	10.0 U	2.0 U	4.0 U	10.0 U
	1,4-Dioxane	N/A	250 U	250 U	250 U	250 U	250 U	250 U	250 U	250 U	250 U	250 U	250 U	250 U	1,200 U	1,200 U	250 U	500 U	1,200 U
VOCs - TICs																			
(ug/L)	Sulfur Dioxide	N/A	NA	NA	NA	NA	NA	NA	NA	NA	NA	NA	NA	NA	NA	NA	NA	NA	NA
	Unknown aldehyde	N/A	NA	NA	NA	NA	NA	NA	NA	NA	NA	NA	NA	NA	NA	NA	NA	NA	NA
	Unknown Substituted Alkanes	N/A	NA	NA	NA	NA	NA	NA	NA	NA	NA	NA	NA	NA	NA	NA	NA	NA	NA
	Unknown Substituted Alkenes	N/A	NA	NA	NA	NA	NA	NA	NA	NA	NA	NA	NA	NA	NA	NA	NA	NA	NA
	Unknown	N/A	NA	NA	NA	NA	NA	NA	NA	NA	NA	NA	NA	NA	NA	NA	NA	NA	NA
PCBs																			
(ug/L)	Aroclor 1016	N/A	0.250 U	0.250 U	0.250 U	0.250 U	0.250 U	0.250 U	0.250 U	0.250 U	0.250 U	0.250 U	0.250 U	0.250 U	0.250 U	0.250 U	0.250 U	0.250 U	0.250 U
	Aroclor 1221	N/A	0.250 U	0.250 U	0.250 U	0.250 U	0.250 U	0.250 U	0.250 U	0.250 U	0.250 U	0.250 U	0.250 U	0.250 U	0.250 U	0.250 U	0.250 U	0.250 U	0.250 U
	Aroclor 1232	N/A	0.250 U	0.250 U	0.250 U	0.250 U	0.250 U	0.250 U	0.250 U	0.250 U	0.250 U	0.250 U	0.250 U	0.250 U	0.250 U	0.250 U	0.250 U	0.250 U	0.250 U
	Aroclor 1242	N/A	0.250 U	0.250 U	0.250 U	0.250 U	0.250 U	0.250 U	0.250 U	0.250 U	0.250 U	0.250 U	0.250 U	0.250 U	0.250 U	0.250 U	0.250 U	0.250 U	0.250 U
	Aroclor 1248	N/A	0.250 U	0.250 U	0.250 U	0.250 U	0.250 U	0.250 U	0.250 U	0.250 U	0.250 U	0.250 U	0.250 U	0.250 U	0.250 U	0.250 U	0.250 U	0.250 U	0.250 U
	Aroclor 1254	N/A	0.250 U	0.250 U	0.250 U	0.250 U	0.250 U	0.250 U	0.250 U	0.250 U	0.250 U	0.250 U	0.250 U	0.250 U	0.250 U	0.250 U	0.250 U	0.250 U	0.250 U
	Aroclor 1260	N/A	0.250 U	0.250 U	0.250 U	0.250 U	0.250 U	0.250 U	0.250 U	0.250 U	0.250 U	0.250 U	0.250 U	0.250 U	0.250 U	0.250 U	0.250 U	0.250 U	0.250 U
	Aroclor 1262	N/A	0.250 U	0.250 U	0.250 U	0.250 U	0.250 U	0.250 U	0.250 U	0.250 U	0.250 U	0.250 U	0.250 U	0.250 U	0.250 U	0.250 U	0.250 U	0.250 U	0.250 U
	Aroclor 1268	N/A	0.250 U	0.250 U	0.250 U	0.250 U	0.250 U	0.250 U	0.250 U	0.250 U	0.250 U	0.250 U	0.250 U	0.250 U	0.250 U	0.250 U	0.250 U	0.250 U	0.250 U
	Total PCBs	5	0.250 U	0.250 U	0.250 U	0.250 U	0.250 U	0.250 U	0.250 U	0.250 U	0.250 U	0.250 U	0.250 U	0.250 U	0.250 U	0.250 U	0.250 U	0.250 U	0.250 U
Total Petroleum Hydrocarbons																			
(ug/L)	TPH	N/A	NA	NA	NA	NA	NA	NA	NA	NA	NA	NA	NA	NA	NA	NA	NA	NA	NA

Notes:
ug/L - micrograms per liter.
NJ - Presumptive evidence of compound.
J - Estimated value.
NA - Sample not analyzed for the listed analyte.
N/A - Not applicable.
U - Compound was not detected at specified quantitation limit.
Values in **Bold** indicate the compound was detected.
VOCs - Volatile Organic Compounds.
PCBs - Polychlorinated Biphenyls.
TICs - Tentatively identified compounds.
* - City of New Bedford Industrial Discharge Permit number S-123.
^ - 0.45 micron filtration done in field; 0.20 and 2.0 micron filtration performed in la

Table 5
Summary of Hydraulic Control System Results for Water Samples
2012 through 2015
New Bedford High School
New Bedford, Massachusetts

Analysis	Analyte	Sample Port:	SP-7																				
		Sample ID:	EFFLUENT	EFFLUENT	EFFLUENT	EFFLUENT	EFFLUENT	EFFLUENT	EFFLUENT	EFFLUENT	EFFLUENT	EFFLUENT	EFFLUENT	EFFLUENT	EFFLUENT	EFFLUENT	EFFLUENT	EFFLUENT	EFFLUENT	EFFLUENT	EFFLUENT	EFFLUENT	EFFLUENT
		Filter Size (micron)^:	N/A	N/A	N/A	N/A	N/A	N/A	N/A	N/A	N/A	N/A	N/A	N/A	N/A	N/A	N/A	N/A	N/A	N/A	N/A	N/A	N/A
		Sample Date:	2/14/2014	3/17/2014	4/21/2014	5/19/2014	6/17/2014	7/15/2014	8/14/2014	9/10/2014	10/15/2014	11/14/2014	12/10/2014	1/14/2015	2/17/2015	3/16/2015	4/13/2015	5/14/2015	6/4/2015	7/30/2015	8/14/2015	9/14/2015	10/13/2015
		Limits*																					
VOCs																							
(ug/L)	Methylene chloride	N/A	4.0 U	10.0 U	2.0 U	2.0 U	2.0 U	2.0 U	2.0 U	2.0 U	2.0 U	2.0 U	2.0 U	2.0 U	2.0 U	2.0 U	2.0 U	2.0 U	2.0 U	2.0 U	2.0 U	2.0 U	2.0 U
	1,1-Dichloroethane	N/A	2.0 U	5.0 U	1.0 U	1.0 U	1.0 U	1.0 U	1.0 U	1.0 U	1.0 U	1.0 U	1.0 U	1.0 U	1.0 U	1.0 U	1.0 U	1.0 U	1.0 U	1.0 U	1.0 U	1.0 U	1.0 U
	Chloroform	N/A	2.0 U	5.0 U	1.0 U	1.0 U	1.0 U	1.0 U	1.0 U	1.0 U	1.0 U	1.0 U	1.0 U	1.0 U	1.0 U	1.0 U	1.0 U	1.0 U	1.0 U	1.0 U	1.0 U	1.0 U	1.0 U
	Carbon tetrachloride	N/A	2.0 U	5.0 U	1.0 U	1.0 U	1.0 U	1.0 U	1.0 U	1.0 U	1.0 U	1.0 U	1.0 U	1.0 U	1.0 U	1.0 U	1.0 U	1.0 U	1.0 U	1.0 U	1.0 U	1.0 U	1.0 U
	1,2-Dichloropropane	N/A	2.0 U	5.0 U	1.0 U	1.0 U	1.0 U	1.0 U	1.0 U	1.0 U	1.0 U	1.0 U	1.0 U	1.0 U	1.0 U	1.0 U	1.0 U	1.0 U	1.0 U	1.0 U	1.0 U	1.0 U	1.0 U
	Dibromochloromethane	N/A	2.0 U	5.0 U	1.0 U	1.0 U	1.0 U	1.0 U	1.0 U	1.0 U	1.0 U	1.0 U	1.0 U	1.0 U	1.0 U	1.0 U	1.0 U	1.0 U	1.0 U	1.0 U	1.0 U	1.0 U	1.0 U
	1,1,2-Trichloroethane	N/A	2.0 U	5.0 U	1.0 U	1.0 U	1.0 U	1.0 U	1.0 U	1.0 U	1.0 U	1.0 U	1.0 U	1.0 U	1.0 U	1.0 U	1.0 U	1.0 U	1.0 U	1.0 U	1.0 U	1.0 U	1.0 U
	Tetrachloroethene	N/A	2.0 U	5.0 U	1.0 U	1.0 U	1.0 U	1.0 U	1.0 U	1.0 U	1.0 U	1.0 U	1.0 U	1.0 U	1.0 U	1.0 U	1.0 U	1.0 U	1.0 U	1.0 U	1.0 U	1.0 U	1.0 U
	Chlorobenzene	N/A	2.0 U	5.0 U	1.0 U	1.0 U	1.0 U	1.0 U	1.0 U	1.0 U	1.0 U	1.0 U	1.0 U	1.0 U	1.0 U	1.0 U	1.0 U	1.0 U	1.0 U	1.0 U	1.0 U	1.0 U	1.0 U
	Trichlorofluoromethane	N/A	4.0 U	10.0 U	2.0 U	2.0 U	2.0 U	2.0 U	2.0 U	2.0 U	2.0 U	2.0 U	2.0 U	2.0 U	2.0 U	2.0 U	2.0 U	2.0 U	2.0 U	2.0 U	2.0 U	2.0 U	2.0 U
	1,2-Dichloroethane	N/A	2.0 U	5.0 U	1.0 U	1.0 U	1.0 U	1.0 U	1.0 U	1.0 U	1.0 U	1.0 U	1.0 U	1.0 U	1.0 U	1.0 U	1.0 U	1.0 U	1.0 U	1.0 U	1.0 U	1.0 U	1.0 U
	1,1,1-Trichloroethane	N/A	2.0 U	5.0 U	1.0 U	1.0 U	1.0 U	1.0 U	1.0 U	1.0 U	1.0 U	1.0 U	1.0 U	1.0 U	1.0 U	1.0 U	1.0 U	1.0 U	1.0 U	1.0 U	1.0 U	1.0 U	1.0 U
	Bromodichloromethane	N/A	2.0 U	5.0 U	1.0 U	1.0 U	1.0 U	1.0 U	1.0 U	1.0 U	1.0 U	1.0 U	1.0 U	1.0 U	1.0 U	1.0 U	1.0 U	1.0 U	1.0 U	1.0 U	1.0 U	1.0 U	1.0 U
	trans-1,3-Dichloropropene	N/A	1.0 U	2.5 U	0.50 U	0.50 U	0.50 U	0.50 U	0.50 U	0.50 U	0.50 U	0.50 U	0.50 U	0.50 U	0.50 U	0.50 U	0.50 U	0.50 U	0.50 U	0.50 U	0.50 U	0.50 U	0.50 U
	cis-1,3-Dichloropropene	N/A	1.0 U	2.5 U	0.50 U	0.50 U	0.50 U	0.50 U	0.50 U	0.50 U	0.50 U	0.50 U	0.50 U	0.50 U	0.50 U	0.50 U	0.50 U	0.50 U	0.50 U	0.50 U	0.50 U	0.50 U	0.50 U
	1,3-Dichloropropene, Total	N/A	NA	NA	NA	0.50 U	0.50 U	0.50 U	0.50 U	0.50 U	0.50 U	0.50 U	0.50 U	0.50 U	0.50 U	0.50 U	0.50 U	0.50 U	0.50 U	0.50 U	0.50 U	0.50 U	0.50 U
	1,1-Dichloropropene	N/A	4.0 U	10.0 U	2.0 U	2.0 U	2.0 U	2.0 U	2.0 U	2.0 U	2.0 U	2.0 U	2.0 U	2.0 U	2.0 U	2.0 U	2.0 U	2.0 U	2.0 U	2.0 U	2.0 U	2.0 U	2.0 U
	Bromoform	N/A	4.0 U	10.0 U	2.0 U	2.0 U	2.0 U	2.0 U	2.0 U	2.0 U	2.0 U	2.0 U	2.0 U	2.0 U	2.0 U	2.0 U	2.0 U	2.0 U	2.0 U	2.0 U	2.0 U	2.0 U	2.0 U
	1,1,2,2-Tetrachloroethane	N/A	2.0 U	5.0 U	1.0 U	1.0 U	1.0 U	1.0 U	1.0 U	1.0 U	1.0 U	1.0 U	1.0 U	1.0 U	1.0 U	1.0 U	1.0 U	1.0 U	1.0 U	1.0 U	1.0 U	1.0 U	1.0 U
	Benzene	N/A	1.0 U	2.5 U	0.50 U	0.50 U	0.50 U	0.50 U	0.50 U	0.50 U	0.50 U	0.50 U	0.50 U	0.50 U	0.50 U	0.50 U	0.50 U	0.50 U	0.50 U	0.50 U	0.50 U	0.50 U	0.50 U
	Toluene	N/A	2.0 U	5.0 U	1.0 U	1.0 U	1.0 U	1.0 U	1.0 U	1.0 U	1.0 U	1.0 U	1.0 U	1.0 U	1.0 U	1.0 U	1.0 U	1.0 U	1.0 U	1.0 U	1.0 U	1.0 U	1.0 U
	Ethylbenzene	N/A	2.0 U	5.0 U	1.0 U	1.0 U	1.0 U	1.0 U	1.0 U	1.0 U	1.0 U	1.0 U	1.0 U	1.0 U	1.0 U	1.0 U	1.0 U	1.0 U	1.0 U	1.0 U	1.0 U	1.0 U	1.0 U
	Chloromethane	N/A	4.0 U	10.0 U	2.0 U	2.0 U	2.0 U	2.0 U	2.0 U	2.0 U	2.0 U	2.0 U	2.0 U	2.0 U	2.0 U	2.0 U	2.0 U	2.0 U	2.0 U	2.0 U	2.0 U	2.0 U	2.0 U
	Bromomethane	N/A	4.0 U	10.0 U	2.0 U	2.0 U	2.0 U	2.0 U	2.0 U	2.0 U	2.0 U	2.0 U	2.0 U	2.0 U	2.0 U	2.0 U	2.0 U	2.0 U	2.0 U	2.0 U	2.0 U	2.0 U	2.0 U
	Vinyl chloride	N/A	2.0 U	5.0 U	1.0 U	1.0 U	1.0 U	1.0 U	1.0 U	1.0 U	1.0 U	1.0 U	1.0 U	1.0 U	1.0 U	1.0 U	1.0 U	1.0 U	1.0 U	1.0 U	1.0 U	1.0 U	1.0 U
	Chloroethane	N/A	4.0 U	10.0 U	2.0 U	2.0 U	2.0 U	2.0 U	2.0 U	2.0 U	2.0 U	2.0 U	2.0 U	2.0 U	2.0 U	2.0 U	2.0 U	2.0 U	2.0 U	2.0 U	2.0 U	2.0 U	2.0 U
	1,1-Dichloroethene	N/A	2.0 U	5.0 U	1.0 U	1.0 U	1.0 U	1.0 U	1.0 U	1.0 U	1.0 U	1.0 U	1.0 U	1.0 U	1.0 U	1.0 U	1.0 U	1.0 U	1.0 U	1.0 U	1.0 U	1.0 U	1.0 U
	trans-1,2-Dichloroethene	N/A	**26**	**26**	**25**	**26**	**24**	**29**	**31**	**30**	**26**	**28**	**23**	**28**	**24**	**23**	1.0 U	**24**	**25**	**16**	**28**	**28**	**26**
	Trichloroethene	N/A	2.0 U	5.0 U	1.0 U	1.0 U	1.0 U	1.0 U	1.0 U	1.0 U	1.0 U	1.0 U	1.0 U	1.0 U	1.0 U	1.0 U	1.0 U	1.0 U	1.0 U	1.0 U	1.0 U	1.0 U	1.0 U
	1,2-Dichlorobenzene	N/A	2.0 U	5.0 U	1.0 U	1.0 U	1.0 U	1.0 U	1.0 U	1.0 U	1.0 U	1.0 U	1.0 U	1.0 U	1.0 U	1.0 U	1.0 U	1.0 U	1.0 U	1.0 U	1.0 U	1.0 U	1.0 U
	1,3-Dichlorobenzene	N/A	2.0 U	5.0 U	1.0 U	1.0 U	1.0 U	1.0 U	1.0 U	1.0 U	1.0 U	1.0 U	1.0 U	1.0 U	1.0 U	1.0 U	1.0 U	1.0 U	1.0 U	1.0 U	1.0 U	1.0 U	1.0 U
	1,4-Dichlorobenzene	N/A	2.0 U	5.0 U	1.0 U	1.0 U	1.0 U	1.0 U	1.0 U	1.0 U	1.0 U	1.0 U	1.0 U	1.0 U	1.0 U	1.0 U	1.0 U	1.0 U	1.0 U	1.0 U	1.0 U	1.0 U	1.0 U
	Methyl tert butyl ether	N/A	4.0 U	10.0 U	2.0 U	2.0 U	2.0 U	2.0 U	2.0 U	2.0 U	2.0 U	2.0 U	2.0 U	2.0 U	2.0 U	2.0 U	2.0 U	2.0 U	2.0 U	2.0 U	2.0 U	2.0 U	2.0 U
	p/m-Xylene	N/A	4.0 U	10 U	2.0 U	2.0 U	2.0 U	2.0 U	2.0 U	2.0 U	2.0 U	2.0 U	2.0 U	2.0 U	2.0 U	2.0 U	2.0 U	2.0 U	2.0 U	2.0 U	2.0 U	2.0 U	2.0 U
	o-Xylene	N/A	2.0 U	5.0 U	1.0 U	1.0 U	1.0 U	1.0 U	1.0 U	1.0 U	1.0 U	1.0 U	1.0 U	1.0 U	1.0 U	1.0 U	1.0 U	1.0 U	1.0 U	1.0 U	1.0 U	1.0 U	1.0 U
	Xylene (Total)	N/A	NA	NA	NA	1.0 U	1.0 U	1.0 U	1.0 U	1.0 U	1.0 U	1.0 U	1.0 U	1.0 U	1.0 U	1.0 U	1.0 U	1.0 U	1.0 U	1.0 U	1.0 U	1.0 U	1.0 U
	cis-1,2-Dichloroethene	N/A	**250**	**170**	**100**	**84**	**75**	**68**	**64**	**58**	**46**	**45**	**41**	**38**	**30**	**28**	**21**	**26**	**27**	**19**	**29**	**30**	**28**
	1,2-Dichloroethene (total)	N/A	NA	NA	NA	**110**	**99**	**97**	**95**	**88**	**72**	**73**	**64**	**66**	**54**	**51**	**21**	**50**	**52**	**35**	**57**	**58**	**54**
	Dibromomethane	N/A	4.0 U	10.0 U	2.0 U	2.0 U	2.0 U	2.0 U	2.0 U	2.0 U	2.0 U	2.0 U	2.0 U	2.0 U	2.0 U	2.0 U	2.0 U	2.0 U	2.0 U	2.0 U	2.0 U	2.0 U	2.0 U
	1,2,3-Trichloropropane	N/A	4.0 U	10.0 U	2.0 U	2.0 U	2.0 U	2.0 U	2.0 U	2.0 U	2.0 U	2.0 U	2.0 U	2.0 U	2.0 U	2.0 U	2.0 U	2.0 U	2.0 U	2.0 U	2.0 U	2.0 U	2.0 U
	Styrene	N/A	2.0 U	5.0 U	1.0 U	1.0 U	1.0 U	1.0 U	1.0 U	1.0 U	1.0 U	1.0 U	1.0 U	1.0 U	1.0 U	1.0 U	1.0 U	1.0 U	1.0 U	1.0 U	1.0 U	1.0 U	1.0 U
	Dichlorodifluoromethane	N/A	4.0 U	10.0 U	2.0 U	2.0 U	2.0 U	2.0 U	2.0 U	2.0 U	2.0 U	2.0 U	2.0 U	2.0 U	2.0 U	2.0 U	2.0 U	2.0 U	2.0 U	2.0 U	2.0 U	2.0 U	2.0 U
	Acetone	N/A	10 U	25 U	5.0 U	5.0 U	5.0 U	5.0 U	5.0 U	5.0 U	5.0 U	5.0 U	5.0 U	5.0 U	5.0 U	5.0 U	5.0 U	5.0 U	5.0 U	5.0 U	5.0 U	5.0 U	5.0 U
	Carbon disulfide	N/A	4.0 U	10.0 U	2.0 U	2.0 U	2.0 U	2.0 U	2.0 U	2.0 U	2.0 U	2.0 U	2.0 U	2.0 U	2.0 U	2.0 U	2.0 U	2.0 U	2.0 U	2.0 U	2.0 U	2.0 U	2.0 U
	2-Butanone	N/A	10 U	25 U	5.0 U	5.0 U	5.0 U	5.0 U	5.0 U	5.0 U	5.0 U	5.0 U	5.0 U	5.0 U	5.0 U	5.0 U	5.0 U	5.0 U	5.0 U	5.0 U	5.0 U	5.0 U	5.0 U

Table 5
Summary of Hydraulic Control System Results for Water Samples
2012 through 2015
New Bedford High School
New Bedford, Massachusetts

Analysis	Analyte	Sample Port:	SP-7																				
		Sample ID:	EFFLUENT	EFFLUENT	EFFLUENT	EFFLUENT	EFFLUENT	EFFLUENT	EFFLUENT	EFFLUENT	EFFLUENT	EFFLUENT	EFFLUENT	EFFLUENT	EFFLUENT	EFFLUENT	EFFLUENT	EFFLUENT	EFFLUENT	EFFLUENT	EFFLUENT	EFFLUENT	EFFLUENT
		Filter Size (micron)^:	N/A	N/A	N/A	N/A	N/A	N/A	N/A	N/A	N/A	N/A	N/A	N/A	N/A	N/A	N/A	N/A	N/A	N/A	N/A	N/A	N/A
		Sample Date:	2/14/2014	3/17/2014	4/21/2014	5/19/2014	6/17/2014	7/15/2014	8/14/2014	9/10/2014	10/15/2014	11/14/2014	12/10/2014	1/14/2015	2/17/2015	3/16/2015	4/13/2015	5/14/2015	6/4/2015	7/30/2015	8/14/2015	9/14/2015	10/13/2015
		Limits*																					
	4-Methyl-2-pentanone	N/A	10 U	25 U	5.0 U	5.0 U	5.0 U	5.0 U	5.0 U	5.0 U	5.0 U	5.0 U	5.0 U	5.0 U	5.0 U	5.0 U	5.0 U	5.0 U	5.0 U	5.0 U	5.0 U	5.0 U	5.0 U
	2-Hexanone	N/A	10 U	25 U	5.0 U	5.0 U	5.0 U	5.0 U	5.0 U	5.0 U	5.0 U	5.0 U	5.0 U	5.0 U	5.0 U	5.0 U	5.0 U	5.0 U	5.0 U	5.0 U	5.0 U	5.0 U	5.0 U
	Bromochloromethane	N/A	4.0 U	10.0 U	2.0 U	2.0 U	2.0 U	2.0 U	2.0 U	2.0 U	2.0 U	2.0 U	2.0 U	2.0 U	2.0 U	2.0 U	2.0 U	2.0 U	2.0 U	2.0 U	2.0 U	2.0 U	2.0 U
	Tetrahydrofuran	N/A	**8.8**	10.0 U	2.0 U	2.0 U	2.0 U	2.0 U	2.0 U	2.0 U	2.0 U	2.0 U	2.0 U	2.0 U	2.0 U	2.0 U	2.0 U	2.0 U	2.0 U	**2.5**	2.0 U	2.0 U	2.0 U
	2,2-Dichloropropane	N/A	4.0 U	10.0 U	2.0 U	2.0 U	2.0 U	2.0 U	2.0 U	2.0 U	2.0 U	2.0 U	2.0 U	2.0 U	2.0 U	2.0 U	2.0 U	2.0 U	2.0 U	2.0 U	2.0 U	2.0 U	2.0 U
	1,2-Dibromoethane	N/A	4.0 U	10.0 U	2.0 U	2.0 U	2.0 U	2.0 U	2.0 U	2.0 U	2.0 U	2.0 U	2.0 U	2.0 U	2.0 U	2.0 U	2.0 U	2.0 U	2.0 U	2.0 U	2.0 U	2.0 U	2.0 U
	1,3-Dichloropropane	N/A	4.0 U	10.0 U	2.0 U	2.0 U	2.0 U	2.0 U	2.0 U	2.0 U	2.0 U	2.0 U	2.0 U	2.0 U	2.0 U	2.0 U	2.0 U	2.0 U	2.0 U	2.0 U	2.0 U	2.0 U	2.0 U
	1,1,1,2-Tetrachloroethane	N/A	2.0 U	5.0 U	1.0 U	1.0 U	1.0 U	1.0 U	1.0 U	1.0 U	1.0 U	1.0 U	1.0 U	1.0 U	1.0 U	1.0 U	1.0 U	1.0 U	1.0 U	1.0 U	1.0 U	1.0 U	1.0 U
	Bromobenzene	N/A	4.0 U	10.0 U	2.0 U	2.0 U	2.0 U	2.0 U	2.0 U	2.0 U	2.0 U	2.0 U	2.0 U	2.0 U	2.0 U	2.0 U	2.0 U	2.0 U	2.0 U	2.0 U	2.0 U	2.0 U	2.0 U
	n-Butylbenzene	N/A	4.0 U	10.0 U	2.0 U	2.0 U	2.0 U	2.0 U	2.0 U	2.0 U	2.0 U	2.0 U	2.0 U	2.0 U	2.0 U	2.0 U	2.0 U	2.0 U	2.0 U	2.0 U	2.0 U	2.0 U	2.0 U
	sec-Butylbenzene	N/A	4.0 U	10.0 U	2.0 U	2.0 U	2.0 U	2.0 U	2.0 U	2.0 U	2.0 U	2.0 U	2.0 U	2.0 U	2.0 U	2.0 U	2.0 U	2.0 U	2.0 U	2.0 U	2.0 U	2.0 U	2.0 U
	tert-Butylbenzene	N/A	4.0 U	10.0 U	2.0 U	2.0 U	2.0 U	2.0 U	2.0 U	2.0 U	2.0 U	2.0 U	2.0 U	2.0 U	2.0 U	2.0 U	2.0 U	2.0 U	2.0 U	2.0 U	2.0 U	2.0 U	2.0 U
	o-Chlorotoluene	N/A	4.0 U	10.0 U	2.0 U	2.0 U	2.0 U	2.0 U	2.0 U	2.0 U	2.0 U	2.0 U	2.0 U	2.0 U	2.0 U	2.0 U	2.0 U	2.0 U	2.0 U	2.0 U	2.0 U	2.0 U	2.0 U
	p-Chlorotoluene	N/A	4.0 U	10.0 U	2.0 U	2.0 U	2.0 U	2.0 U	2.0 U	2.0 U	2.0 U	2.0 U	2.0 U	2.0 U	2.0 U	2.0 U	2.0 U	2.0 U	2.0 U	2.0 U	2.0 U	2.0 U	2.0 U
	1,2-Dibromo-3-chloropropane	N/A	4.0 U	10.0 U	2.0 U	2.0 U	2.0 U	2.0 U	2.0 U	2.0 U	2.0 U	2.0 U	2.0 U	2.0 U	2.0 U	2.0 U	2.0 U	2.0 U	2.0 U	2.0 U	2.0 U	2.0 U	2.0 U
	Hexachlorobutadiene	N/A	1.2 U	3.0 U	0.60 U	0.60 U	0.60 U	0.60 U	0.60 U	0.60 U	0.60 U	0.60 U	0.60 U	0.60 U	0.60 U	0.60 U	0.60 U	0.60 U	0.60 U	0.60 U	0.60 U	0.60 U	0.60 U
	Isopropylbenzene	N/A	4.0 U	10.0 U	2.0 U	2.0 U	2.0 U	2.0 U	2.0 U	2.0 U	2.0 U	2.0 U	2.0 U	2.0 U	2.0 U	2.0 U	2.0 U	2.0 U	2.0 U	2.0 U	2.0 U	2.0 U	2.0 U
	p-Isopropyltoluene	N/A	4.0 U	10.0 U	2.0 U	2.0 U	2.0 U	2.0 U	2.0 U	2.0 U	2.0 U	2.0 U	2.0 U	2.0 U	2.0 U	2.0 U	2.0 U	2.0 U	2.0 U	2.0 U	2.0 U	2.0 U	2.0 U
	Naphthalene	N/A	4.0 U	10.0 U	2.0 U	2.0 U	2.0 U	2.0 U	2.0 U	2.0 U	2.0 U	2.0 U	2.0 U	2.0 U	2.0 U	2.0 U	2.0 U	2.0 U	2.0 U	2.0 U	2.0 U	2.0 U	2.0 U
	n-Propylbenzene	N/A	4.0 U	10.0 U	2.0 U	2.0 U	2.0 U	2.0 U	2.0 U	2.0 U	2.0 U	2.0 U	2.0 U	2.0 U	2.0 U	2.0 U	2.0 U	2.0 U	2.0 U	2.0 U	2.0 U	2.0 U	2.0 U
	1,2,3-Trichlorobenzene	N/A	4.0 U	10.0 U	2.0 U	2.0 U	2.0 U	2.0 U	2.0 U	2.0 U	2.0 U	2.0 U	2.0 U	2.0 U	2.0 U	2.0 U	2.0 U	2.0 U	2.0 U	2.0 U	2.0 U	2.0 U	2.0 U
	1,2,4-Trichlorobenzene	N/A	4.0 U	10.0 U	2.0 U	2.0 U	2.0 U	2.0 U	2.0 U	2.0 U	2.0 U	2.0 U	2.0 U	2.0 U	2.0 U	2.0 U	2.0 U	2.0 U	2.0 U	2.0 U	2.0 U	2.0 U	2.0 U
	1,3,5-Trimethylbenzene	N/A	4.0 U	10.0 U	2.0 U	2.0 U	2.0 U	2.0 U	2.0 U	2.0 U	2.0 U	2.0 U	2.0 U	2.0 U	2.0 U	2.0 U	2.0 U	2.0 U	2.0 U	2.0 U	2.0 U	2.0 U	2.0 U
	1,2,4-Trimethylbenzene	N/A	4.0 U	10.0 U	2.0 U	2.0 U	2.0 U	2.0 U	2.0 U	2.0 U	2.0 U	2.0 U	2.0 U	2.0 U	2.0 U	2.0 U	2.0 U	2.0 U	2.0 U	2.0 U	2.0 U	2.0 U	2.0 U
	Ethyl ether	N/A	4.0 U	10.0 U	2.0 U	2.0 U	2.0 U	2.0 U	2.0 U	2.0 U	2.0 U	2.0 U	2.0 U	2.0 U	2.0 U	2.0 U	2.0 U	2.0 U	2.0 U	2.0 U	2.0 U	2.0 U	2.0 U
	Isopropyl Ether	N/A	4.0 U	10.0 U	2.0 U	2.0 U	2.0 U	2.0 U	2.0 U	2.0 U	2.0 U	2.0 U	2.0 U	2.0 U	2.0 U	2.0 U	2.0 U	2.0 U	2.0 U	2.0 U	2.0 U	2.0 U	2.0 U
	Ethyl-Tert-Butyl-Ether	N/A	4.0 U	10.0 U	2.0 U	2.0 U	2.0 U	2.0 U	2.0 U	2.0 U	2.0 U	2.0 U	2.0 U	2.0 U	2.0 U	2.0 U	2.0 U	2.0 U	2.0 U	2.0 U	2.0 U	2.0 U	2.0 U
	Tertiary-Amyl Methyl Ether	N/A	4.0 U	10.0 U	2.0 U	2.0 U	2.0 U	2.0 U	2.0 U	2.0 U	2.0 U	2.0 U	2.0 U	2.0 U	2.0 U	2.0 U	2.0 U	2.0 U	2.0 U	2.0 U	2.0 U	2.0 U	2.0 U
	1,4-Dioxane	N/A	500 U	1,200 U	250 U	250 U	250 U	250 U	250 U	250 U	250 U	250 U	250 U	250 U	250 U	250 U	250 U	250 U	250 U	250 U	250 U	250 U	250 U
VOCs - TICs																							
(ug/L)	Sulfur Dioxide	N/A	NA	NA	NA	NA	NA	NA	NA	NA	NA	NA	NA	NA	NA	NA	NA	NA	NA	NA	NA	NA	NA
	Unknown aldehyde	N/A	NA	NA	NA	NA	NA	NA	NA	NA	NA	NA	NA	NA	NA	NA	NA	NA	NA	NA	NA	NA	NA
	Unknown Substituted Alkanes	N/A	NA	NA	NA	NA	NA	NA	NA	NA	NA	NA	NA	NA	NA	NA	NA	NA	NA	NA	NA	NA	NA
	Unknown Substituted Alkenes	N/A	NA	NA	NA	NA	NA	NA	NA	NA	NA	NA	NA	NA	NA	NA	NA	NA	NA	NA	NA	NA	NA
	Unknown	N/A	NA	NA	NA	NA	NA	NA	NA	NA	NA	NA	NA	NA	NA	NA	NA	NA	NA	NA	NA	NA	NA
PCBs																							
(ug/L)	Aroclor 1016	N/A	0.250 U	0.250 U	0.250 U	0.250 U	0.250 U	0.250 U	0.250 U	0.250 U	0.250 U	0.250 U	0.250 U	0.250 U	0.250 U	0.250 U	0.250 U	0.250 U	0.250 U	0.250 U	0.250 U	0.250 U	0.250 U
	Aroclor 1221	N/A	0.250 U	0.250 U	0.250 U	0.250 U	0.250 U	0.250 U	0.250 U	0.250 U	0.250 U	0.250 U	0.250 U	0.250 U	0.250 U	0.250 U	0.250 U	0.250 U	0.250 U	0.250 U	0.250 U	0.250 U	0.250 U
	Aroclor 1232	N/A	0.250 U	0.250 U	0.250 U	0.250 U	0.250 U	0.250 U	0.250 U	0.250 U	0.250 U	0.250 U	0.250 U	0.250 U	0.250 U	0.250 U	0.250 U	0.250 U	0.250 U	0.250 U	0.250 U	0.250 U	0.250 U
	Aroclor 1242	N/A	0.250 U	0.250 U	0.250 U	0.250 U	0.250 U	0.250 U	0.250 U	0.250 U	0.250 U	0.250 U	0.250 U	0.250 U	0.250 U	0.250 U	0.250 U	0.250 U	0.250 U	0.250 U	0.250 U	0.250 U	0.250 U
	Aroclor 1248	N/A	0.250 U	0.250 U	0.250 U	0.250 U	0.250 U	0.250 U	0.250 U	0.250 U	0.250 U	0.250 U	0.250 U	0.250 U	0.250 U	0.250 U	0.250 U	0.250 U	0.250 U	0.250 U	0.250 U	0.250 U	0.250 U
	Aroclor 1254	N/A	0.250 U	0.250 U	0.250 U	0.250 U	0.250 U	0.250 U	0.250 U	0.250 U	0.250 U	0.250 U	0.250 U	0.250 U	0.250 U	0.250 U	0.250 U	0.250 U	0.250 U	0.250 U	0.250 U	0.250 U	0.250 U
	Aroclor 1260	N/A	0.250 U	0.250 U	0.250 U	0.250 U	0.250 U	0.250 U	0.250 U	0.250 U	0.250 U	0.250 U	0.250 U	0.250 U	0.250 U	0.250 U	0.250 U	0.250 U	0.250 U	0.250 U	0.250 U	0.250 U	0.250 U
	Aroclor 1262	N/A	0.250 U	0.250 U	0.250 U	0.250 U	0.250 U	0.250 U	0.250 U	0.250 U	0.250 U	0.250 U	0.250 U	0.250 U	0.250 U	0.250 U	0.250 U	0.250 U	0.250 U	0.250 U	0.250 U	0.250 U	0.250 U
	Aroclor 1268	N/A	0.250 U	0.250 U	0.250 U	0.250 U	0.250 U	0.250 U	0.250 U	0.250 U	0.250 U	0.250 U	0.250 U	0.250 U	0.250 U	0.250 U	0.250 U	0.250 U	0.250 U	0.250 U	0.250 U	0.250 U	0.250 U
	Total PCBs	5	0.250 U	0.250 U	0.250 U	0.250 U	0.250 U	0.250 U	0.250 U	0.250 U	0.250 U	0.250 U	0.250 U	0.250 U	0.250 U	0.250 U	0.250 U	0.250 U	0.250 U	0.250 U	0.250 U	0.250 U	0.250 U
Total Petroleum Hydrocarbons																							
(ug/L)	TPH	N/A	NA	NA	NA	NA	NA	NA	NA	NA	NA	NA	NA	NA	NA	NA	NA	NA	NA	NA	NA	NA	NA

Notes:
ug/L - micrograms per liter.
NJ - Presumptive evidence of compound.
J - Estimated value.
NA - Sample not analyzed for the listed analyte.
N/A - Not applicable.
U - Compound was not detected at specified quantitation limit.
Values in **Bol**d indicate the compound was detected.
VOCs - Volatile Organic Compounds.
PCBs - Polychlorinated Biphenyls.
TICs - Tentatively identified compounds.
* - City of New Bedford Industrial Discharge Permit number S-123.
^ - 0.45 micron filtration done in field; 0.20 and 2.0 micron filtration performed in la

Table 6
Summary of Analytical Results for Quarterly Discharge Monitoring Samples -- 2012 through 2015
New Bedford High School
New Bedford, Massachusetts

Analysis	Analyte	Sample ID:	EFFLUENT (GRAB)													
		Sample Date:	6/11/2012	9/19/2012	12/12/2012	3/14/2013	6/19/2013	9/17/2013	12/18/2013	3/17/2014	6/18/2014	9/11/2014	12/11/2014	3/17/2015	6/5/2015	9/15/2015
		Daily Maximum*														
VOCs																
(ug/L)	Methylene chloride	N/A	NA	5.0 U	5.0 U	NA	25 U	25 U	12 U	NA	NA	NA	NA	NA	NA	NA
	1,1-Dichloroethane	N/A	NA	1.5 U	1.5 U	NA	7.5 U	7.5 U	3.8 U	NA	NA	NA	NA	NA	NA	NA
	Chloroform	N/A	NA	1.5 U	1.5 U	NA	7.5 U	7.5 U	3.8 U	NA	NA	NA	NA	NA	NA	NA
	Carbon tetrachloride	N/A	NA	1.0 U	1.0 U	NA	5.0 U	5.0 U	2.5 U	NA	NA	NA	NA	NA	NA	NA
	1,2-Dichloropropane	N/A	NA	3.5 U	3.5 U	NA	18 U	18 U	8.8 U	NA	NA	NA	NA	NA	NA	NA
	Dibromochloromethane	N/A	NA	1.0 U	1.0 U	NA	5 U	5.0 U	2.5 U	NA	NA	NA	NA	NA	NA	NA
	1,1,2-Trichloroethane	N/A	NA	1.5 U	1.5 U	NA	7.5 U	7.5 U	3.8 U	NA	NA	NA	NA	NA	NA	NA
	2-Chloroethylvinyl ether	N/A	NA	10 U	10 U	NA	50 U	50 U	50 U	NA	NA	NA	NA	NA	NA	NA
	Tetrachloroethene	N/A	NA	1.5 U	1.5 U	NA	7.5 U	7.5 U	3.8 U	NA	NA	NA	NA	NA	NA	NA
	Chlorobenzene	N/A	NA	3.5 U	3.5 U	NA	18 U	18 U	8.8 U	NA	NA	NA	NA	NA	NA	NA
	Trichlorofluoromethane	N/A	NA	5.0 U	5.0 U	NA	25 U	25 U	12 U	NA	NA	NA	NA	NA	NA	NA
	1,2-Dichloroethane	N/A	NA	1.5 U	1.5 U	NA	7.5 U	7.5 U	3.8 U	NA	NA	NA	NA	NA	NA	NA
	1,1,1-Trichloroethane	N/A	NA	2.0 U	2.0 U	NA	10 U	10 U	5.0 U	NA	NA	NA	NA	NA	NA	NA
	Bromodichloromethane	N/A	NA	1.0 U	1.0 U	NA	5.0 U	5.0 U	2.5 U	NA	NA	NA	NA	NA	NA	NA
	trans-1,3-Dichloropropene	N/A	NA	1.5 U	1.5 U	NA	7.5 U	7.5 U	3.8 U	NA	NA	NA	NA	NA	NA	NA
	cis-1,3-Dichloropropene	N/A	NA	1.5 U	1.5 U	NA	7.5 U	7.5 U	3.8 U	NA	NA	NA	NA	NA	NA	NA
	Bromoform	N/A	NA	1.0 U	1.0 U	NA	5.0 U	5.0 U	2.5 U	NA	NA	NA	NA	NA	NA	NA
	1,1,2,2-Tetrachloroethane	N/A	NA	1.0 U	1.0 U	NA	5.0 U	5.0 U	2.5 U	NA	NA	NA	NA	NA	NA	NA
	Benzene	N/A	NA	1.0 U	1.0 U	NA	5.0 U	5.0 U	2.5 U	NA	NA	NA	NA	NA	NA	NA
	Toluene	N/A	NA	1.0 U	1.0 U	NA	5.0 U	5.0 U	2.5 U	NA	NA	NA	NA	NA	NA	NA
	Ethylbenzene	N/A	NA	1.0 U	1.0 U	NA	5.0 U	5.0 U	2.5 U	NA	NA	NA	NA	NA	NA	NA
	Chloromethane	N/A	NA	10 U	10 U	NA	50 U	25 U	12 U	NA	NA	NA	NA	NA	NA	NA
	Bromomethane	N/A	NA	5.0 U	5.0 U	NA	25 U	25 U	12 U	NA	NA	NA	NA	NA	NA	NA
	Vinyl chloride	N/A	NA	**7.9**	**62**	NA	10 U	10 U	2.5 U	NA	NA	NA	NA	NA	NA	NA
	Chloroethane	N/A	NA	2.0 U	2.0 U	NA	10 U	10 U	5.0 U	NA	NA	NA	NA	NA	NA	NA
	1,1-Dichloroethene	N/A	NA	1.0 U	1.0 U	NA	5.0 U	5.0 U	2.5 U	NA	NA	NA	NA	NA	NA	NA
	trans-1,2-Dichloroethene	N/A	NA	1.5 U	1.5 U	NA	7.5 U	**8.3**	**14**	NA	NA	NA	NA	NA	NA	NA
	cis-1,2-Dichloroethene	N/A	NA	1.0 U	1.0 U	NA	**320**	**260**	**180**	NA	NA	NA	NA	NA	NA	NA
	Trichloroethene	N/A	NA	1.0 U	1.0 U	NA	5.0 U	5.0 U	2.5 U	NA	NA	NA	NA	NA	NA	NA
	1,2-Dichlorobenzene	N/A	NA	5.0 U	5.0 U	NA	25 U	25 U	12 U	NA	NA	NA	NA	NA	NA	NA
	1,3-Dichlorobenzene	N/A	NA	5.0 U	5.0 U	NA	25 U	25 U	12 U	NA	NA	NA	NA	NA	NA	NA
	1,4-Dichlorobenzene	N/A	NA	5.0 U	5.0 U	NA	25 U	25 U	12 U	NA	NA	NA	NA	NA	NA	NA
	p/m-Xylene	N/A	NA	2.0 U	2.0 U	NA	10 U	10 U	5.0 U	NA	NA	NA	NA	NA	NA	NA
	o-xylene	N/A	NA	1.0 U	1.0 U	NA	5.0 U	5.0 U	2.5 U	NA	NA	NA	NA	NA	NA	NA
	Xylene (Total)	N/A	NA	2.0 U	2.0 U	NA	10 U	10 U	5.0 U	NA	NA	NA	NA	NA	NA	NA
	Styrene	N/A	NA	1.0 U	1.0 U	NA	5.0 U	5.0 U	2.5 U	NA	NA	NA	NA	NA	NA	NA
	Acetone	N/A	NA	10 U	10 U	NA	50 U	50 U	25 U	NA	NA	NA	NA	NA	NA	NA
	Carbon disulfide	N/A	NA	5.0 U	5.0 U	NA	25 U	25 U	12 U	NA	NA	NA	NA	NA	NA	NA
	2-Butanone	N/A	NA	10 U	10 U	NA	50 U	50 U	25 U	NA	NA	NA	NA	NA	NA	NA
	Vinyl acetate	N/A	NA	20 U	10 U	NA	50 U	50 U	25 U	NA	NA	NA	NA	NA	NA	NA
	4-Methyl-2-pentanone	N/A	NA	10 U	10 U	NA	50 U	50 U	25 U	NA	NA	NA	NA	NA	NA	NA
	2-Hexanone	N/A	NA	10 U	10 U	NA	50 U	50 U	25 U	NA	NA	NA	NA	NA	NA	NA
	Acrolein	N/A	NA	8.0 U	8.0 U	NA	40 U	40 U	20 U	NA	NA	NA	NA	NA	NA	NA
	Acrylonitrile	N/A	NA	10 U	10 U	NA	50 U	50 U	25 U	NA	NA	NA	NA	NA	NA	NA
	Dibromomethane	N/A	NA	1.0 U	1.0 U	NA	5.0 U	5.0 U	2.5 U	NA	NA	NA	NA	NA	NA	NA
PCBs																
(ug/L)	Aroclor 1016	N/A	NA	NA	NA	NA	NA	NA	NA	NA	NA	NA	NA	NA	NA	NA
	Aroclor 1221	N/A	NA	NA	NA	NA	NA	NA	NA	NA	NA	NA	NA	NA	NA	NA
	Aroclor 1232	N/A	NA	NA	NA	NA	NA	NA	NA	NA	NA	NA	NA	NA	NA	NA
	Aroclor 1242	N/A	NA	NA	NA	NA	NA	NA	NA	NA	NA	NA	NA	NA	NA	NA
	Aroclor 1248	N/A	NA	NA	NA	NA	NA	NA	NA	NA	NA	NA	NA	NA	NA	NA
	Aroclor 1254	N/A	NA	NA	NA	NA	NA	NA	NA	NA	NA	NA	NA	NA	NA	NA
	Aroclor 1260	N/A	NA	NA	NA	NA	NA	NA	NA	NA	NA	NA	NA	NA	NA	NA
	Total PCBs	5	NA	NA	NA	NA	NA	NA	NA	NA	NA	NA	NA	NA	NA	NA
General Chemistry																
(s.u.)	pH	5.5-11.0	**6.0**	**6.1**	**6.7**	**7.4**	**7.1**	**8.2**	**7.9**	**7.2**	**6.5**	**6.9**	NA	**7.0**	**6.9**	**7.5**
(mg/L)	Oil & Grease	100	4.4 U	4.0 U	4.0 U	4.0 U	4.0 U	4.0 U	4.0 U	4.0 U	4.0 U	4.0 U	NA	4.0 U	4.0 U	4.0 U
(mg/L)	Solids, Total Suspended	N/A	NA	NA	NA	NA	5.0 U	NA	NA	NA	NA	NA	5.0 U	NA	NA	NA
(mg/L)	BOD, 5 day	N/A	NA	2.0 U	5.0 U	2.0 U	NA	NA	NA	2.0 U	NA	NA	2.0 U	NA	NA	NA

Notes:
s.u. - Standard unit.
mg/L - milligrams per liter.
ug/L - micrograms per liter.
NA - Sample not analyzed for the listed analyte.
N/A - Not applicable.
U - Compound was not detected at specified quantitation limit.
Values in **Bold** indicate the compound was detected.
VOCs - Volatile Organic Compounds.
PCBs - Polychlorinated Biphenyls.
* - City of New Bedford Industrial Discharge Permit number S-123.

Table 6
Summary of Analytical Results for Quarterly Discharge Monitoring Samples -- 2012 through 2015
New Bedford High School
New Bedford, Massachusetts

Analysis	Analyte	Sample ID:	EFFLUENT (COMPOSITE)													
		Sample Date:	6/12/2012	9/20/2012	12/12/2012	3/14/2013	6/19/2013	9/17/2013	12/18/2013	3/17/2014	6/18/2014	9/11/2014	12/11/2014	3/17/2015	6/5/2015	9/15/2015
		Daily Maximum*														
VOCs																
(ug/L)	Methylene chloride	N/A	NA	NA	NA	NA	NA	NA	NA	NA	NA	NA	NA	NA	NA	NA
	1,1-Dichloroethane	N/A	NA	NA	NA	NA	NA	NA	NA	NA	NA	NA	NA	NA	NA	NA
	Chloroform	N/A	NA	NA	NA	NA	NA	NA	NA	NA	NA	NA	NA	NA	NA	NA
	Carbon tetrachloride	N/A	NA	NA	NA	NA	NA	NA	NA	NA	NA	NA	NA	NA	NA	NA
	1,2-Dichloropropane	N/A	NA	NA	NA	NA	NA	NA	NA	NA	NA	NA	NA	NA	NA	NA
	Dibromochloromethane	N/A	NA	NA	NA	NA	NA	NA	NA	NA	NA	NA	NA	NA	NA	NA
	1,1,2-Trichloroethane	N/A	NA	NA	NA	NA	NA	NA	NA	NA	NA	NA	NA	NA	NA	NA
	2-Chloroethylvinyl ether	N/A	NA	NA	NA	NA	NA	NA	NA	NA	NA	NA	NA	NA	NA	NA
	Tetrachloroethene	N/A	NA	NA	NA	NA	NA	NA	NA	NA	NA	NA	NA	NA	NA	NA
	Chlorobenzene	N/A	NA	NA	NA	NA	NA	NA	NA	NA	NA	NA	NA	NA	NA	NA
	Trichlorofluoromethane	N/A	NA	NA	NA	NA	NA	NA	NA	NA	NA	NA	NA	NA	NA	NA
	1,2-Dichloroethane	N/A	NA	NA	NA	NA	NA	NA	NA	NA	NA	NA	NA	NA	NA	NA
	1,1,1-Trichloroethane	N/A	NA	NA	NA	NA	NA	NA	NA	NA	NA	NA	NA	NA	NA	NA
	Bromodichloromethane	N/A	NA	NA	NA	NA	NA	NA	NA	NA	NA	NA	NA	NA	NA	NA
	trans-1,3-Dichloropropene	N/A	NA	NA	NA	NA	NA	NA	NA	NA	NA	NA	NA	NA	NA	NA
	cis-1,3-Dichloropropene	N/A	NA	NA	NA	NA	NA	NA	NA	NA	NA	NA	NA	NA	NA	NA
	Bromoform	N/A	NA	NA	NA	NA	NA	NA	NA	NA	NA	NA	NA	NA	NA	NA
	1,1,2,2-Tetrachloroethane	N/A	NA	NA	NA	NA	NA	NA	NA	NA	NA	NA	NA	NA	NA	NA
	Benzene	N/A	NA	NA	NA	NA	NA	NA	NA	NA	NA	NA	NA	NA	NA	NA
	Toluene	N/A	NA	NA	NA	NA	NA	NA	NA	NA	NA	NA	NA	NA	NA	NA
	Ethylbenzene	N/A	NA	NA	NA	NA	NA	NA	NA	NA	NA	NA	NA	NA	NA	NA
	Chloromethane	N/A	NA	NA	NA	NA	NA	NA	NA	NA	NA	NA	NA	NA	NA	NA
	Bromomethane	N/A	NA	NA	NA	NA	NA	NA	NA	NA	NA	NA	NA	NA	NA	NA
	Vinyl chloride	N/A	NA	NA	NA	NA	NA	NA	NA	NA	NA	NA	NA	NA	NA	NA
	Chloroethane	N/A	NA	NA	NA	NA	NA	NA	NA	NA	NA	NA	NA	NA	NA	NA
	1,1-Dichloroethene	N/A	NA	NA	NA	NA	NA	NA	NA	NA	NA	NA	NA	NA	NA	NA
	trans-1,2-Dichloroethene	N/A	NA	NA	NA	NA	NA	NA	NA	NA	NA	NA	NA	NA	NA	NA
	cis-1,2-Dichloroethene	N/A	NA	NA	NA	NA	NA	NA	NA	NA	NA	NA	NA	NA	NA	NA
	Trichloroethene	N/A	NA	NA	NA	NA	NA	NA	NA	NA	NA	NA	NA	NA	NA	NA
	1,2-Dichlorobenzene	N/A	NA	NA	NA	NA	NA	NA	NA	NA	NA	NA	NA	NA	NA	NA
	1,3-Dichlorobenzene	N/A	NA	NA	NA	NA	NA	NA	NA	NA	NA	NA	NA	NA	NA	NA
	1,4-Dichlorobenzene	N/A	NA	NA	NA	NA	NA	NA	NA	NA	NA	NA	NA	NA	NA	NA
	p/m-Xylene	N/A	NA	NA	NA	NA	NA	NA	NA	NA	NA	NA	NA	NA	NA	NA
	o-xylene	N/A	NA	NA	NA	NA	NA	NA	NA	NA	NA	NA	NA	NA	NA	NA
	Xylene (Total)	N/A	NA	NA	NA	NA	NA	NA	NA	NA	NA	NA	NA	NA	NA	NA
	Styrene	N/A	NA	NA	NA	NA	NA	NA	NA	NA	NA	NA	NA	NA	NA	NA
	Acetone	N/A	NA	NA	NA	NA	NA	NA	NA	NA	NA	NA	NA	NA	NA	NA
	Carbon disulfide	N/A	NA	NA	NA	NA	NA	NA	NA	NA	NA	NA	NA	NA	NA	NA
	2-Butanone	N/A	NA	NA	NA	NA	NA	NA	NA	NA	NA	NA	NA	NA	NA	NA
	Vinyl acetate	N/A	NA	NA	NA	NA	NA	NA	NA	NA	NA	NA	NA	NA	NA	NA
	4-Methyl-2-pentanone	N/A	NA	NA	NA	NA	NA	NA	NA	NA	NA	NA	NA	NA	NA	NA
	2-Hexanone	N/A	NA	NA	NA	NA	NA	NA	NA	NA	NA	NA	NA	NA	NA	NA
	Acrolein	N/A	NA	NA	NA	NA	NA	NA	NA	NA	NA	NA	NA	NA	NA	NA
	Acrylonitrile	N/A	NA	NA	NA	NA	NA	NA	NA	NA	NA	NA	NA	NA	NA	NA
	Dibromomethane	N/A	NA	NA	NA	NA	NA	NA	NA	NA	NA	NA	NA	NA	NA	NA
PCBs																
(ug/L)	Aroclor 1016	N/A	0.25 U	0.25 U	0.25 U	0.25 U	0.25 U	0.25 U	0.25 U	0.25 U	0.25 U	0.25 U	0.25 U	0.25 U	0.25 U	0.25 U
	Aroclor 1221	N/A	0.25 U	0.25 U	0.25 U	0.25 U	0.25 U	0.25 U	0.25 U	0.25 U	0.25 U	0.25 U	0.25 U	0.25 U	0.25 U	0.25 U
	Aroclor 1232	N/A	0.25 U	0.25 U	0.25 U	0.25 U	0.25 U	0.25 U	0.25 U	0.25 U	0.25 U	0.25 U	0.25 U	0.25 U	0.25 U	0.25 U
	Aroclor 1242	N/A	0.25 U	0.25 U	0.25 U	0.25 U	0.25 U	0.25 U	0.25 U	0.25 U	0.25 U	0.25 U	0.25 U	0.25 U	0.25 U	0.25 U
	Aroclor 1248	N/A	0.25 U	0.25 U	0.25 U	0.25 U	0.25 U	0.25 U	0.25 U	0.25 U	0.25 U	0.25 U	0.25 U	0.25 U	0.25 U	0.25 U
	Aroclor 1254	N/A	0.25 U	0.25 U	0.25 U	0.25 U	0.25 U	0.25 U	0.25 U	0.25 U	0.25 U	0.25 U	0.25 U	0.25 U	0.25 U	0.25 U
	Aroclor 1260	N/A	0.25 U	0.25 U	0.25 U	0.25 U	0.25 U	0.25 U	0.25 U	0.25 U	0.25 U	0.20 U	0.20 U	0.20 U	0.20 U	0.20 U
	Total PCBs	5	0.25 U	0.25 U	0.25 U	0.25 U	0.25 U	0.25 U	0.25 U	0.25 U	0.25 U	0.25 U	0.25 U	0.25 U	0.25 U	0.25 U
General Chemistry																
(s.u.)	pH	5.5-11.0	NA	NA	NA	NA	NA	NA	NA	NA	NA	NA	NA	NA	NA	NA
(mg/L)	Oil & Grease	100	NA	NA	NA	NA	NA	NA	NA	NA	NA	NA	NA	NA	NA	NA
(mg/L)	Solids, Total Suspended	N/A	5.0 U	**6.5**	5.0 U	5.0 U	5.0 U	5.0 U	5.0 U	5.0 U	5.0 U	5.0 U	5.0 U	5.0 U	5.0 U	5.0 U
(mg/L)	BOD, 5 day	N/A	2.0 U	2.0 U	2.0 U	NA	2.0 U	2.0 U	2.0 U	NA	2.0 U	2.0 U	2.0 U	2.0 U	2.0 U	2.0 U

Notes:
s.u. - Standard unit.
mg/L - milligrams per liter.
ug/L - micrograms per liter.
NA - Sample not analyzed for the listed analyte.
N/A - Not applicable.
U - Compound was not detected at specified quantitation limit.
Values in **Bold** indicate the compound was detected.
VOCs - Volatile Organic Compounds.
PCBs - Polychlorinated Biphenyls.
* - City of New Bedford Industrial Discharge Permit number S-123.

Table 6
Summary of Analytical Results for Quarterly Discharge Monitoring Samples -- 2012 through 2015
New Bedford High School
New Bedford, Massachusetts

Analysis	Analyte	Sample ID:	E-1 THROUGH E-12 EFFLUENT	EFF. C-1 THRU C-4	EFFLUENT ROUND 1 THRU 4											
		Sample Date:	6/12/2012	9/20/2012	12/12/2012	3/14/2013	6/18/2013	9/17/2013	12/18/2013	3/17/2014	6/18/2014	9/11/2014	12/11/2014	3/17/2015	6/5/2015	9/15/2015
		Daily Maximum*														
VOCs																
(ug/L)	Methylene chloride	N/A	5.0 U	5.0 U	5.0 U	5.0 U	5.0 U	5.0 U	10 U	5.0 U	5.0 U	5.0 U	5.0 U	5.0 U	5.0 U	5.0 U
	1,1-Dichloroethane	N/A	1.5 U	1.5 U	1.5 U	1.5 U	1.5 U	1.5 U	3.0 U	1.5 U	1.5 U	1.5 U	1.5 U	1.5 U	1.5 U	1.5 U
	Chloroform	N/A	1.5 U	1.5 U	1.5 U	1.5 U	1.5 U	1.5 U	3.0 U	1.5 U	1.5 U	1.5 U	1.5 U	1.5 U	1.5 U	1.5 U
	Carbon tetrachloride	N/A	1.0 U	1.0 U	1.0 U	1.0 U	1.0 U	1.0 U	2.0 U	1.0 U	1.0 U	1.0 U	1.0 U	1.0 U	1.0 U	1.0 U
	1,2-Dichloropropane	N/A	3.5 U	3.5 U	3.5 U	3.5 U	3.5 U	3.5 U	7.0 U	3.5 U	3.5 U	3.5 U	3.5 U	3.5 U	3.5 U	3.5 U
	Dibromochloromethane	N/A	1.0 U	1.0 U	1.0 U	1.0 U	1.0 U	1.0 U	2.0 U	1.0 U	1.0 U	1.0 U	1.0 U	1.0 U	1.0 U	1.0 U
	1,1,2-Trichloroethane	N/A	1.5 U	1.5 U	1.5 U	1.5 U	1.5 U	1.5 U	3.0 U	1.5 U	1.5 U	1.5 U	1.5 U	1.5 U	1.5 U	1.5 U
	2-Chloroethylvinyl ether	N/A	10 U	10 U	10 U	10 U	10 U	10 U	40 U	10 U	10 U	10 U	10 U	10 U	10 U	10 U
	Tetrachloroethene	N/A	1.5 U	1.5 U	1.5 U	1.5 U	1.5 U	1.5 U	3.0 U	1.5 U	1.5 U	1.5 U	1.5 U	1.5 U	1.5 U	1.5 U
	Chlorobenzene	N/A	3.5 U	3.5 U	3.5 U	3.5 U	3.5 U	3.5 U	7.0 U	3.5 U	3.5 U	3.5 U	3.5 U	3.5 U	3.5 U	3.5 U
	Trichlorofluoromethane	N/A	5.0 U	5.0 U	5.0 U	5.0 U	5.0 U	5.0 U	10 U	5.0 U	5.0 U	5.0 U	5.0 U	5.0 U	5.0 U	5.0 U
	1,2-Dichloroethane	N/A	1.5 U	1.5 U	1.5 U	1.5 U	1.5 U	1.5 U	3.0 U	1.5 U	1.5 U	1.5 U	1.5 U	1.5 U	1.5 U	1.5 U
	1,1,1-Trichloroethane	N/A	2.0 U	2.0 U	2.0 U	2.0 U	2.0 U	2.0 U	4.0 U	2.0 U	2.0 U	2.0 U	2.0 U	2.0 U	2.0 U	2.0 U
	Bromodichloromethane	N/A	1.0 U	1.0 U	1.0 U	1.0 U	1.0 U	1.0 U	2.0 U	1.0 U	1.0 U	1.0 U	1.0 U	1.0 U	1.0 U	1.0 U
	trans-1,3-Dichloropropene	N/A	1.5 U	1.5 U	1.5 U	1.5 U	1.5 U	1.5 U	3.0 U	1.5 U	1.5 U	1.5 U	1.5 U	1.5 U	1.5 U	1.5 U
	cis-1,3-Dichloropropene	N/A	1.5 U	1.5 U	1.5 U	1.5 U	1.5 U	1.5 U	3.0 U	1.5 U	1.5 U	1.5 U	1.5 U	1.5 U	1.5 U	1.5 U
	Bromoform	N/A	1.0 U	1.0 U	1.0 U	1.0 U	1.0 U	1.0 U	2.0 U	1.0 U	1.0 U	1.0 U	1.0 U	1.0 U	1.0 U	1.0 U
	1,1,2,2-Tetrachloroethane	N/A	1.0 U	1.0 U	1.0 U	1.0 U	1.0 U	1.0 U	2.0 U	1.0 U	1.0 U	1.0 U	1.0 U	1.0 U	1.0 U	1.0 U
	Benzene	N/A	1.0 U	1.0 U	1.0 U	1.0 U	1.0 U	1.0 U	2.0 U	1.0 U	1.0 U	1.0 U	1.0 U	1.0 U	1.0 U	1.0 U
	Toluene	N/A	1.0 U	1.0 U	1.0 U	1.0 U	1.0 U	1.0 U	2.0 U	1.0 U	1.0 U	1.0 U	1.0 U	1.0 U	1.0 U	1.0 U
	Ethylbenzene	N/A	1.0 U	1.0 U	1.0 U	1.0 U	1.0 U	1.0 U	2.0 U	1.0 U	1.0 U	1.0 U	1.0 U	1.0 U	1.0 U	1.0 U
	Chloromethane	N/A	10 U	10 U	10 U	10 U	10 U	5 U	10 U	5.0 U	5.0 U	5.0 U	5.0 U	5.0 U	5.0 U	5.0 U
	Bromomethane	N/A	5.0 U	5.0 U	5.0 U	5.0 U	5.0 U	5.0 U	10 U	5.0 U	5.0 U	5.0 U	5.0 U	5.0 U	5.0 U	5.0 U
	Vinyl chloride	N/A	2.0 U	**6.1**	**48**	**12**	2.0 U	2.0 U	2.0 U	1.0 U	1.0 U	1.0 U	1.0 U	1.0 U	1.0 U	1.0 U
	Chloroethane	N/A	2.0 U	2.0 U	2.0 U	2.0 U	2.0 U	2.0 U	4.0 U	2.0 U	2.0 U	2.0 U	2.0 U	2.0 U	2.0 U	2.0 U
	1,1-Dichloroethene	N/A	1.0 U	1.0 U	1.0 U	1.0 U	1.0 U	1.0 U	2.0 U	1.0 U	1.0 U	1.0 U	1.0 U	1.0 U	1.0 U	1.0 U
	trans-1,2-Dichloroethene	N/A	1.5 U	1.5 U	1.5 U	1.5 U	1.5 U	**7.7**	**14**	**20**	**24**	**23**	**26**	**16**	**19**	**25**
	cis-1,2-Dichloroethene	N/A	1.0 U	1.0 U	1.0 U	1.0 U	**270**	**230**	**180**	**140**	**70**	**44**	**37**	**21**	**21**	**28**
	Trichloroethene	N/A	1.0 U	1.0 U	1.0 U	1.0 U	1.0 U	1.0 U	2.0 U	1.0 U	1.0 U	1.0 U	1.0 U	1.0 U	1.0 U	1.0 U
	1,2-Dichlorobenzene	N/A	5.0 U	5.0 U	5.0 U	5.0 U	5.0 U	5.0 U	10 U	5.0 U	5.0 U	5.0 U	5.0 U	5.0 U	5.0 U	5.0 U
	1,3-Dichlorobenzene	N/A	5.0 U	5.0 U	5.0 U	5.0 U	5.0 U	5.0 U	10 U	5.0 U	5.0 U	5.0 U	5.0 U	5.0 U	5.0 U	5.0 U
	1,4-Dichlorobenzene	N/A	5.0 U	5.0 U	5.0 U	5.0 U	5.0 U	5.0 U	10 U	5.0 U	5.0 U	5.0 U	5.0 U	5.0 U	5.0 U	5.0 U
	p/m-Xylene	N/A	2.0 U	2.0 U	2.0 U	2.0 U	2.0 U	2.0 U	4.0 U	2.0 U	2.0 U	2.0 U	2.0 U	2.0 U	2.0 U	2.0 U
	o-xylene	N/A	1.0 U	1.0 U	1.0 U	1.0 U	1.0 U	1.0 U	2.0 U	1.0 U	1.0 U	1.0 U	1.0 U	1.0 U	1.0 U	1.0 U
	Xylene (Total)	N/A	2.0 U	2.0 U	2.0 U	2.0 U	2.0 U	2.0 U	4.0 U	1.0 U	1.0 U	1.0 U	1.0 U	1.0 U	1.0 U	1.0 U
	Styrene	N/A	1.0 U	1.0 U	1.0 U	1.0 U	1.0 U	1.0 U	2.0 U	1.0 U	1.0 U	1.0 U	1.0 U	1.0 U	1.0 U	1.0 U
	Acetone	N/A	10 U	10 U	10 U	10 U	10 U	10 U	20 U	10 U	10 U	10 U	10 U	10 U	10 U	10 U
	Carbon disulfide	N/A	5.0 U	5.0 U	5.0 U	5.0 U	5.0 U	5.0 U	10 U	5.0 U	5.0 U	5.0 U	5.0 U	5.0 U	5.0 U	5.0 U
	2-Butanone	N/A	10 U	10 U	10 U	10 U	10 U	10 U	20 U	10 U	10 U	10 U	10 U	10 U	10 U	10 U
	Vinyl acetate	N/A	20 U	20 U	10 U	10 U	10 U	10 U	20 U	10 U	10 U	10 U	10 U	10 U	10 U	10 U
	4-Methyl-2-pentanone	N/A	10 U	10 U	10 U	10 U	10 U	10 U	20 U	10 U	10 U	10 U	10 U	10 U	10 U	10 U
	2-Hexanone	N/A	10 U	10 U	10 U	10 U	10 U	10 U	20 U	10 U	10 U	10 U	10 U	10 U	10 U	10 U
	Acrolein	N/A	8.0 U	8.0 U	8.0 U	8.0 U	8.0 U	8.0 U	16 U	8.0 U	8.0 U	8.0 U	8.0 U	8.0 U	8.0 U	8.0 U
	Acrylonitrile	N/A	10 U	10 U	10 U	10 U	10 U	10 U	20 U	10 U	10 U	10 U	10 U	10 U	10 U	10 U
	Dibromomethane	N/A	1.0 U	1.0 U	1.0 U	1.0 U	1.0 U	1.0 U	2.0 U	1.0 U	1.0 U	1.0 U	1.0 U	1.0 U	1.0 U	1.0 U
PCBs																
(ug/L)	Aroclor 1016	N/A	NA	NA	NA	NA	NA	NA	NA	NA	NA	NA	NA	NA	NA	NA
	Aroclor 1221	N/A	NA	NA	NA	NA	NA	NA	NA	NA	NA	NA	NA	NA	NA	NA
	Aroclor 1232	N/A	NA	NA	NA	NA	NA	NA	NA	NA	NA	NA	NA	NA	NA	NA
	Aroclor 1242	N/A	NA	NA	NA	NA	NA	NA	NA	NA	NA	NA	NA	NA	NA	NA
	Aroclor 1248	N/A	NA	NA	NA	NA	NA	NA	NA	NA	NA	NA	NA	NA	NA	NA
	Aroclor 1254	N/A	NA	NA	NA	NA	NA	NA	NA	NA	NA	NA	NA	NA	NA	NA
	Aroclor 1260	N/A	NA	NA	NA	NA	NA	NA	NA	NA	NA	NA	NA	NA	NA	NA
	Total PCBs	5	NA	NA	NA	NA	NA	NA	NA	NA	NA	NA	NA	NA	NA	NA
General Chemistry																
(s.u.)	pH	5.5-11.0	NA	NA	NA	NA	NA	NA	NA	NA	NA	NA	NA	NA	NA	NA
(mg/L)	Oil & Grease	100	NA	NA	NA	NA	NA	NA	NA	NA	NA	NA	NA	NA	NA	NA
(mg/L)	Solids, Total Suspended	N/A	NA	NA	NA	NA	NA	NA	NA	NA	NA	NA	NA	NA	NA	NA
(mg/L)	BOD, 5 day	N/A	NA	NA	NA	NA	NA	NA	NA	NA	NA	NA	NA	NA	NA	NA

Notes:
s.u. - Standard unit.
mg/L - milligrams per liter.
ug/L - micrograms per liter.
NA - Sample not analyzed for the listed analyte.
N/A - Not applicable.
U - Compound was not detected at specified quantitation limit.
Values in **Bold** indicate the compound was detected.
VOCs - Volatile Organic Compounds.
PCBs - Polychlorinated Biphenyls.
* - City of New Bedford Industrial Discharge Permit number S-123.

Table 7
Summary of Sub-Slab Vapor Mitigation System Emission Results
2012 through 2015
New Bedford High School
New Bedford, Massachusetts

Analysis	Analyte	VSP #:	VSP-1																			
		Sample ID:	Vapor Inlet																			
		Sample Date:	3/27/2012	4/17/2012	5/14/2012	6/11/2012	7/16/2012	8/21/2012	9/18/2012	10/18/2012	11/21/2012	12/12/2012	1/15/2013	2/15/2013	3/13/2013	4/16/2013	5/16/2013	6/18/2013	7/30/2013	8/20/2013	9/16/2013	10/15/2013
		AALs*																				
TO-15																						
(ug/m3)	Vinyl chloride	0.38	0.511 U	**6.29**	**10.5**	**5.21**	**5.85**	**210**	**6.16**	**16.1**	**19.4**	**5.32**	**8.79**	**9.99**	**37.1**	**7.46**	**9.25**	**14.0**	**9.23**	**4.35**	**6.95**	**7.26**
	Bromomethane	2.64	0.777 U	0.777 U	0.777 U	0.777 U	0.777 U	0.777 U	0.777 U	0.777 U	0.777 U	0.777 U	0.777 U	0.777 U	0.078 U	0.078 U	0.777 U	0.777 U	0.777 U	0.777 U	0.777 U	0.777 U
	Acetone	160.54	2.38 U	2.38 U	**3.82**	**2.71**	**6.22**	**6.18**	**5.01**	**9.03**	**93.1**	**3.85**	**3.52**	**4.44**	**6.29**	2.38 U	**38.5**	**18.1**	**10.0**	**6.79**	**36.6**	**8.67**
	1,1-Dichloroethene	0.02	0.793 U	0.793 U	0.793 U	0.793 U	0.793 U	**1.83**	0.793 U	0.793 U	0.793 U	0.793 U	0.793 U	0.793 U	**0.313**	**0.222**	0.793 U	0.793 U	0.793 U	0.793 U	0.793 U	0.793 U
	Methylene chloride	0.24	4.86 U	4.86 U	4.86 U	4.86 U	**9.28**	4.86 U	4.86 U	4.86 U	4.86 U	4.86 U	4.86 U	4.86 U	4.86 U	4.86 U	4.86 U	4.86 U	4.86 U	4.86 U	4.86 U	4.86 U
	trans-1,2-Dichloroethene	107.81[a]	**5.27**	**14.1**	**14.4**	**5.71**	**14.0**	**214**	**40.0**	**55.1**	**67.8**	**37.3**	**35.7**	**44.4**	**27.8**	**34.1**	**26.3**	**30.6**	**22.6**	**10.1**	**14.3**	**13.7**
	1,1-Dichloroethane	NS	0.809 U	0.809 U	0.809 U	0.809 U	0.809 U	0.809 U	0.809 U	0.809 U	0.809 U	0.809 U	0.809 U	0.809 U	0.081 U	0.081 U	0.809 U	0.809 U	0.809 U	0.809 U	0.809 U	0.809 U
	Methyl tert butyl ether	NS	0.721 U	0.721 U	0.721 U	0.721 U	0.721 U	0.721 U	0.721 U	0.721 U	0.721 U	0.721 U	0.721 U	0.721 U	0.072 U	0.072 U	0.721 U	0.721 U	0.721 U	0.721 U	0.721 U	0.721 U
	2-Butanone	10	**4.45**	**9.32**	**2.24**	**1.93**	**2.81**	**5.43**	**9.05**	**2.46**	**1.49**	**1.65**	**1.35**	**1.86**	**1.82**	**0.737**	**2.85**	**2.69**	1.48 U	**1.32**	**11.5**	**1.33**
	cis-1,2-Dichloroethene	107.81[a]	**13.4**	**51.9**	**42.0**	**16.4**	**35.1**	**456**	**82.1**	**141**	**161**	**77.7**	**82.1**	**111**	**46.4**	**76.9**	**59.1**	**63.4**	**59.5**	**28.3**	**38.9**	**37.3**
	Chloroform	0.04	0.977 U	**1.04**	**1.75**	0.977 U	**1.97**	**1.78**	**1.9**	**1.11**	0.977 U	0.977 U	0.977 U	0.977 U	**0.957**	**0.366**	0.977 U	**1.90**	**2.19**	**2.58**	**2.35**	**1.53**
	1,2-Dichloroethane	0.04	0.809 U	0.809 U	0.809 U	0.809 U	0.809 U	0.809 U	0.809 U	0.809 U	0.809 U	0.809 U	0.809 U	0.809 U	0.081 U	0.081 U	0.809 U	0.809 U	0.809 U	0.809 U	0.809 U	0.809 U
	1,1,1-Trichloroethane	1038.37	1.09 U	1.09 U	1.09 U	1.09 U	1.09 U	1.09 U	1.09 U	1.09 U	1.09 U	1.09 U	1.09 U	1.09 U	**0.273**	**0.147**	1.09 U	1.09 U	1.09 U	1.09 U	1.09 U	1.09 U
	Benzene	0.12	**1.50**	**0.716**	0.639 U	0.639 U	0.639 U	0.639 U	0.639 U	**0.639**	0.639 U	0.639 U	0.639 U	0.639 U	**0.364**	0.319 U	0.639 U	0.639 U	0.639 U	0.639 U	0.639 U	0.639 U
	Carbon tetrachloride	0.07	1.26 U	1.26 U	1.26 U	1.26 U	1.26 U	1.26 U	1.26 U	1.26 U	1.26 U	1.26 U	1.26 U	1.26 U	**0.421**	**0.409**	1.26 U	1.26 U	1.26 U	1.26 U	1.26 U	1.26 U
	1,2-Dichloropropane	0.05	0.924 U	0.924 U	0.924 U	0.924 U	0.924 U	0.924 U	0.924 U	0.924 U	0.924 U	0.924 U	0.924 U	0.924 U	0.092 U	0.092 U	0.924 U	0.924 U	0.924 U	0.924 U	0.924 U	0.924 U
	Bromodichloromethane	NS	1.34 U	1.34 U	1.34 U	1.34 U	1.34 U	1.34 U	1.34 U	1.34 U	1.34 U	1.34 U	1.34 U	1.34 U	0.134 U	0.134 U	1.34 U	1.34 U	1.34 U	1.34 U	1.34 U	1.34 U
	1,4-Dioxane	0.24	0.721 U	0.721 U	0.721 U	0.721 U	0.721 U	0.721 U	0.721 U	0.721 U	0.721 U	0.721 U	0.721 U	0.721 U	0.360 U	0.36 U	0.721 U	0.721 U	0.721 U	0.721 U	0.721 U	0.721 U
	Trichloroethene	0.61	**62.3**	**133**	**50.0**	**15.9**	**23.8**	**36.6**	**20.1**	**39.6**	**41.0**	**18.3**	**15.7**	**15.6**	**14.2**	**14.2**	**12.2**	**16.1**	**10.5**	**6.50**	**8.17**	**6.93**
	cis-1,3-Dichloropropene	NS	0.908 U	0.908 U	0.908 U	0.908 U	0.908 U	0.908 U	0.908 U	0.908 U	0.908 U	0.908 U	0.908 U	0.908 U	0.091 U	0.091 U	0.908 U	0.908 U	0.908 U	0.908 U	0.908 U	0.908 U
	4-Methyl-2-pentanone	55.7	0.820 U	0.820 U	0.820 U	0.820 U	0.82 U	0.820 U	0.82 U	0.820 U	0.820 U	0.820 U	0.820 U	0.820 U	0.820 U	0.82 U	**1.70**	0.82 U	0.82 U	0.820 U	**2.54**	0.82 U
	trans-1,3-Dichloropropene	NS	0.908 U	0.908 U	0.908 U	0.908 U	0.908 U	0.908 U	0.908 U	0.908 U	0.908 U	0.908 U	0.908 U	0.908 U	0.091 U	0.091 U	0.908 U	0.908 U	0.908 U	0.908 U	0.908 U	0.908 U
	1,1,2-Trichloroethane	0.06	1.09 U	1.09 U	1.09 U	1.09 U	1.09 U	1.09 U	1.09 U	1.09 U	1.09 U	1.09 U	1.09 U	1.09 U	0.109 U	0.109 U	1.09 U	1.09 U	1.09 U	1.09 U	1.09 U	1.09 U
	Toluene	20	**8.67**	**5.46**	**1.42**	**0.810**	**1.18**	**2.78**	**0.844**	**2.21**	**2.30**	**3.44**	**2.34**	**5.43**	**3.58**	**2.13**	**5.05**	**6.33**	**2.91**	**3.19**	**7.12**	**3.76**
	Dibromochloromethane	NS	1.70 U	1.70 U	1.70 U	1.70 U	1.70 U	1.70 U	1.70 U	1.70 U	1.70 U	1.70 U	1.70 U	1.70 U	0.170 U	0.17 U	1.70 U	1.70 U	1.70 U	1.70 U	1.70 U	1.7 U
	1,2-Dibromoethane	NS	1.54 U	1.54 U	1.54 U	1.54 U	1.54 U	1.54 U	1.54 U	1.54 U	1.54 U	1.54 U	1.54 U	1.54 U	0.154 U	0.154 U	1.54 U	1.54 U	1.54 U	1.54 U	1.54 U	1.54 U
	Tetrachloroethene	0.1	1.36 U	1.36 U	1.36 U	1.36 U	1.36 U	1.36 U	1.36 U	1.36 U	1.36 U	1.36 U	1.36 U	1.36 U	**0.563**	**0.319**	**1.76**	1.36 U	1.36 U	1.36 U	1.36 U	1.36 U
	Chlorobenzene	6.26	0.921 U	0.921 U	0.921 U	0.921 U	0.921 U	0.921 U	0.921 U	0.921 U	0.921 U	0.921 U	0.921 U	0.921 U	**0.272**	**0.258**	0.921 U	0.921 U	0.921 U	0.921 U	0.921 U	0.921 U
	Ethylbenzene	300	**1.45**	**1.59**	**0.977**	**1.27**	**1.28**	**0.916**	0.869 U	**1.10**	**1.10**	**0.873**	**0.93**	**1.94**	**1.27**	**1.18**	**3.30**	**2.25**	**0.986**	0.869 U	**2.05**	**0.89**
	p/m-Xylene	11.8	**3.86**	**5.12**	**2.09**	**3.52**	**4.78**	1.74 U	1.74 U	1.74 U	1.74 U	**1.80**	1.74 U	**3.94**	**1.93**	**1.34**	**7.91**	**3.52**	1.74 U	**1.86**	**6.34**	**2.02**
	Bromoform	NS	2.07 U	2.07 U	2.07 U	2.07 U	2.07 U	2.07 U	2.07 U	2.07 U	2.07 U	2.07 U	2.07 U	2.07 U	0.207 U	0.207 U	2.07 U	2.07 U	2.07 U	2.07 U	2.07 U	2.07 U
	Styrene	2	0.852 U	0.852 U	0.852 U	0.852 U	0.852 U	0.852 U	0.852 U	0.852 U	0.852 U	0.852 U	0.852 U	0.852 U	**0.089**	0.085 U	0.852 U	0.852 U	0.852 U	0.852 U	0.852 U	0.852 U
	1,1,2,2-Tetrachloroethane	0.02	1.37 U	1.37 U	1.37 U	1.37 U	1.37 U	1.37 U	1.37 U	1.37 U	1.37 U	1.37 U	1.37 U	1.37 U	0.137 U	0.137 U	1.37 U	1.37 U	1.37 U	1.37 U	1.37 U	1.37 U
	o-Xylene	11.8	**1.37**	**1.92**	**0.869**	**1.21**	**1.54**	0.869 U	0.869 U	0.869 U	0.869 U	0.869 U	0.869 U	**1.48**	**0.760**	**0.486**	**2.70**	**1.22**	0.869 U	0.869 U	**2.20**	0.869 U
	1,3-Dichlorobenzene	NS	1.20 U	1.20 U	1.20 U	1.20 U	1.20 U	1.20 U	1.2 U	1.20 U	1.20 U	1.20 U	1.20 U	**1.41**	**0.800**	**1.19**	1.20 U	1.20 U	1.20 U	1.20 U	1.20 U	1.2 U
	1,4-Dichlorobenzene	0.18	1.20 U	1.20 U	**1.28**	1.20 U	1.20 U	**1.48**	**1.23**	**4.05**	**2.54**	**1.96**	**2.37**	**3.58**	**2.35**	**3.19**	**2.09**	**2.09**	**1.58**	1.20 U	**1.56**	**1.59**
	1,2-Dichlorobenzene	81.74	1.20 U	1.20 U	1.20 U	1.20 U	1.20 U	1.20 U	1.20 U	1.20 U	1.20 U	1.20 U	1.20 U	1.20 U	**0.198**	**0.289**	1.20 U	1.20 U	1.20 U	1.20 U	1.20 U	1.2 U
	1,2,4-Trichlorobenzene	NS	1.48 U	1.48 U	**1.54**	1.48 U	1.48 U	1.48 U	1.48 U	**2.27**	**1.78**	1.48 U	**1.60**	**2.32**	**1.37**	**2.26**	**1.52**	1.48 U	1.48 U	1.48 U	**1.57**	1.48 U
	Naphthalene	14.25	1.05 U	1.05 U	1.05 U	1.05 U	1.05 U	1.05 U	1.05 U	1.05 U	1.05 U	1.05 U	1.05 U	1.05 U	**0.278**	**0.278**	1.05 U	1.05 U	1.05 U	**1.50**	**1.32**	1.05 U
	Hexachlorobutadiene	NS	2.13 U	2.13 U	2.13 U	2.13 U	2.13 U	2.13 U	2.13 U	2.13 U	2.13 U	2.13 U	2.13 U	2.13 U	0.533 U	0.533 U	2.13 U	2.13 U	2.13 U	2.13 U	2.13 U	2.13 U
	Xylenes (total)	11.8	**5.23**	**7.04**	**2.959**	**4.73**	**6.32**	1.74 U	1.74 U	1.74 U	1.74 U	**1.80**	1.74 U	**5.42**	**2.69**	**1.826**	**10.61**	**4.74**	1.74 U	**1.86**	**8.54**	**2.02**
PCBs																						
(ug/m3)	Aroclor 1016	NS	0.0833 U	0.0833 U	0.333 U	0.0833 U	0.0619 U	0.0833 U	0.0833 U	0.0833 U	0.0833 U	0.0278 U	0.0556 U	0.0417 U	0.0556 U	0.0556 U	0.0833 U	0.0556 U	0.0833 U	0.0833 U	0.0556 U	0.0833 U
	Aroclor 1221	NS	0.0833 U	0.0833 U	0.333 U	0.0833 U	0.0619 U	0.0833 U	0.0833 U	0.0833 U	0.0833 U	0.0278 U	0.0556 U	0.0417 U	0.0556 U	**0.195**	**0.229**	0.0556 U	**0.208**	**0.242**	**0.212**	**0.20**
	Aroclor 1232	NS	0.0833 U	0.0833 U	0.333 U	0.0833 U	0.0619 U	0.0833 U	0.0833 U	0.0833 U	0.0833 U	0.0278 U	0.0556 U	0.0417 U	0.0556 U	0.0556 U	0.0833 U	0.0556 U	0.0833 U	0.0833 U	0.0556 U	0.0833 U
	Aroclor 1242	NS	0.0833 U	0.0833 U	0.333 U	0.0833 U	0.0619 U	0.0833 U	0.0833 U	0.0833 U	0.0833 U	0.0278 U	0.0556 U	0.0417 U	0.0556 U	0.0556 U	0.0833 U	0.0556 U	0.0833 U	0.0833 U	0.0556 U	0.0833 U
	Aroclor 1248	NS	**0.159 J**	0.0833 U	**2.89**	**0.759**	**0.808**	**2.44**	0.0833 U	**0.358**	**0.418**	**0.424**	**0.508**	**0.724**	**0.470**	**0.591**	**0.581**	**0.738**	**0.811**	**0.813**	**0.884**	**1.01**
	Aroclor 1254	NS	**0.440 J**	0.0833 U	**9.08**	**2.58**	**2.81**	**3.56**	**1.90**	**0.729**	**0.744**	**0.764**	**0.711**	**0.686**	**0.422**	**0.474**	**0.648**	**0.679**	**0.739**	**0.715**	**0.641**	**0.70**
	Aroclor 1260	NS	0.0833 U	0.0833 U	0.333 U	0.0833 U	0.0619 U	0.0833 U	0.0833 U	0.0833 U	0.0833 U	0.0278 U	0.0556 U	0.0417 U	0.0556 U	0.0556 U	0.0833 U	0.0556 U	0.0833 U	0.0833 U	0.0556 U	0.0833 U
	Aroclor 1262	NS	NA	NA	NA	NA	NA	NA	NA	NA	NA	NA	NA	NA	NA	NA	NA	NA	NA	NA	NA	NA
	Aroclor 1268	NS	NA	NA	NA	NA	NA	NA	NA	NA	NA	NA	NA	NA	NA	NA	NA	NA	NA	NA	NA	NA
	Total PCBs	0.0005	**0.599 J**	0.0833 U	**11.97**	**3.339**	**3.618**	**6.00**	**1.90**	**1.087**	**1.162**	**1.188**	**1.219**	**1.410**	**0.892**	**1.260**	**1.458**	**1.417**	**1.758**	**1.770**	**1.737**	**1.911**

Notes:
ug/m3 - micrograms per cubic meter.
J - Estimated value.
NA - Sample not analyzed for the listed analyte.
NS - No MassDEP limits exist for this analyte.
U - Compound was not detected at specified quantitation limit.
Values in **Bold** indicate the compound was detected.
TO - Toxic organics.
PCBs - Polychlorinated Biphenyls.
a - Used AAL for 1,2-Dichloroethylene.
* - MassDEP Allowable Ambient Limits (AALs), January 2012.
** - The PCB vapor sample container provided by the analytical laboratory in February 2013 was incorrect and the sample collected from the vapor discharge was not properly sealed and may have contained ambient air from within the mechanical room.

Table 7
Summary of Sub-Slab Vapor Mitigation System Emission Results
2012 through 2015
New Bedford High School
New Bedford, Massachusetts

Analysis	Analyte	VSP #:	VSP-1																							VSP-4	VSP-2	
		Sample ID:	Vapor Inlet																							Tank Vent	Mid Carbon	Vapor Mid Carbon
		Sample Date:	11/15/2013	12/17/2013	1/16/2014	2/14/2014	3/17/2014	4/21/2014	5/19/2014	6/17/2014	7/15/2014	8/14/2014	9/10/2014	10/15/2014	11/14/2014	12/10/2014	1/14/2015	2/17/2015	3/16/2015	4/13/2015	5/14/2015	6/4/2015	8/14/2015	9/14/2015	10/13/2015	3/27/2012	3/27/2012	11/21/2012
		AALs*																										
TO-15 (ug/m3)	Vinyl chloride	0.38	**1.64**	**3.71**	**43.2**	0.511 U	**10.1**	**1.74**	**8.31**	**8.26**	**3.78**	**6.01**	**2.76**	**2.01**	0.511 U	**2.52**	**5.32**	**3.86**	**4.29**	**3.68**	0.511 U	**1.21**	**7.52**	**5.42**	**6.44**	**244**	**0.734**	NA
	Bromomethane	2.64	0.777 U	0.777 U	0.777 U	0.777 U	0.777 U	0.777 U	0.777 U	0.777 U	0.777 U	0.777 U	0.777 U	0.777 U	0.777 U	0.777 U	0.777 U	0.777 U	0.777 U	0.777 U	0.777 U	0.777 U	0.777 U	0.777 U	0.777 U	35.6 U	0.777 U	NA
	Acetone	160.54	**7.48**	**10.9**	**5.23**	**12.5**	**3.54**	**8.79**	**6.29**	**10.8**	**13.3**	**10.0**	**5.32**	**15.9**	**9.12**	2.38 U	**5.01**	2.38 U	2.38 U	**9.19**	2.38 U	**6.94**	**4.23**	**6.41**	**8.77**	109 U	**10.3**	NA
	1,1-Dichloroethene	0.02	0.793 U	0.793 U	0.793 U	0.793 U	0.793 U	0.793 U	0.793 U	0.793 U	0.793 U	0.793 U	0.793 U	0.793 U	0.793 U	0.793 U	0.793 U	0.793 U	0.793 U	0.793 U	0.793 U	0.793 U	0.793 U	0.793 U	0.793 U	36.3 U	0.793 U	NA
	Methylene chloride	0.24	4.86 U	4.86 U	4.86 U	4.86 U	4.86 U	4.86 U	4.86 U	4.86 U	4.86 U	4.86 U	4.86 U	4.86 U	4.86 U	4.86 U	4.86 U	1.74 U	1.74 U	1.74 U	1.74 U	1.74 U	1.74 U	1.74 U	1.74 U	223 U	4.86 U	NA
	trans-1,2-Dichloroethene	107.81[a]	**3.46**	**3.11**	**17.6**	0.793 U	**9.87**	**4.92**	**8.48**	**8.84**	**6.38**	**4.68**	**5.79**	**3.89**	0.793 U	**4.00**	**3.08**	**2.60**	**2.57**	**3.27**	0.793 U	0.79 U	**1.97**	**2.52**	**2.84**	**366**	0.793 U	NA
	1,1-Dichloroethane	NS	0.809 U	0.809 U	0.809 U	0.809 U	0.809 U	0.809 U	0.809 U	0.809 U	0.809 U	0.809 U	0.809 U	0.809 U	0.809 U	0.809 U	0.809 U	0.809 U	0.809 U	0.809 U	0.809 U	0.809 U	0.809 U	0.809 U	0.809 U	37.1 U	0.809 U	NA
	Methyl tert butyl ether	NS	0.721 U	0.721 U	0.721 U	0.721 U	0.721 U	0.721 U	0.721 U	0.721 U	0.721 U	0.721 U	0.721 U	0.721 U	0.721 U	0.721 U	0.721 U	0.721 U	0.721 U	0.721 U	0.721 U	0.721 U	0.721 U	0.721 U	0.721 U	33.0 U	0.721 U	NA
	2-Butanone	10	**0.852**	**3.01**	**1.40**	**4.04**	**1.78**	**2.30**	**2.68**	**1.61**	**2.45**	**2.32**	**0.767**	**1.34**	**0.814**	0.590 U	1.47 U	1.47 U	**1.80**	**1.92**	**1.56**	1.47 U	1.47 U	1.47 U	1.57	27.0 U	**2.22**	NA
	cis-1,2-Dichloroethene	107.81[a]	**10.0**	**6.46**	**26.0**	0.793 U	**24.7**	**8.13**	**17.8**	**18.8**	**16.1**	**10.6**	**10.9**	**8.01**	0.793 U	**7.53**	**5.79**	**4.88**	**4.88**	**4.92**	0.793 U	0.793 U	**2.51**	**3.68**	**4.16**	**1,260**	0.793 U	NA
	Chloroform	0.04	0.977 U	0.977 U	0.977 U	0.977 U	0.977 U	0.977 U	0.977 U	**1.44**	0.977 U	0.977 U	**1.22**	0.977 U	0.977 U	0.977 U	0.977 U	1.18	0.977 U	0.977 U	**0.982**	0.977 U	**1.22**	**1.80**	**1.37**	44.7 U	0.977 U	NA
	1,2-Dichloroethane	0.04	0.809 U	0.809 U	0.809 U	0.809 U	0.809 U	0.809 U	0.809 U	0.809 U	0.809 U	0.809 U	0.809 U	0.809 U	0.809 U	0.809 U	0.809 U	0.809 U	0.809 U	0.809 U	0.809 U	0.809 U	0.809 U	0.809 U	0.809 U	37.1 U	0.809 U	NA
	1,1,1-Trichloroethane	1038.37	1.09 U	1.09 U	1.09 U	1.09 U	1.09 U	1.09 U	1.09 U	**1.53**	1.09 U	1.09 U	1.09 U	1.09 U	1.09 U	1.09 U	1.09 U	1.09 U	1.09 U	1.09 U	1.09 U	1.09 U	1.09 U	1.09 U	1.09 U	50.0 U	1.09 U	NA
	Benzene	0.12	0.639 U	**1.08**	0.639 U	**1.40**	0.639 U	0.639 U	0.639 U	0.639 U	**0.674**	**1.84**	0.639 U	0.639 U	0.639 U	0.639 U	0.639 U	**7.67**	**2.06**	**1.26**	0.639 U	**1.21**	0.639 U	0.639 U	0.639 U	29.3 U	**5.14**	NA
	Carbon tetrachloride	0.07	1.26 U	1.26 U	1.26 U	1.26 U	1.26 U	1.26 U	1.26 U	1.26 U	1.26 U	1.26 U	1.26 U	1.26 U	1.26 U	1.26 U	1.26 U	1.26 U	1.26 U	1.26 U	1.26 U	1.26 U	1.26 U	1.26 U	1.26 U	57.6 U	1.26 U	NA
	1,2-Dichloropropane	0.05	0.924 U	0.924 U	0.924 U	0.924 U	0.924 U	0.924 U	0.924 U	0.924 U	0.924 U	0.924 U	0.924 U	0.924 U	0.924 U	0.924 U	0.924 U	0.924 U	0.924 U	0.924 U	0.924 U	0.924 U	0.924 U	0.924 U	0.924 U	42.3 U	0.924 U	NA
	Bromodichloromethane	NS	1.34 U	1.34 U	1.34 U	1.34 U	1.34 U	1.34 U	1.34 U	1.34 U	1.34 U	1.34 U	1.34 U	1.34 U	1.34 U	1.34 U	1.34 U	1.34 U	1.34 U	1.34 U	1.34 U	1.34 U	1.34 U	1.34 U	1.34 U	61.4 U	1.34 U	NA
	1,4-Dioxane	0.24	0.721 U	0.721 U	0.721 U	0.721 U	0.721 U	0.721 U	0.721 U	0.721 U	0.721 U	0.721 U	0.721 U	0.721 U	0.721 U	0.721 U	0.721 U	0.721 U	0.721 U	0.721 U	0.721 U	0.721 U	0.721 U	0.721 U	0.721 U	33.0 U	0.721 U	NA
	Trichloroethene	0.61	**4.22**	**2.90**	**2.92**	1.07 U	**4.84**	**3.49**	**7.15**	**6.77**	**5.15**	**4.29**	**5.48**	**3.60**	**1.57**	**2.92**	**2.88**	**2.45**	**2.99**	**5.15**	**1.17**	**1.7**	**3.66**	**3.54**	**2.85**	**15,200**	1.07 U	NA
	cis-1,3-Dichloropropene	NS	0.908 U	0.908 U	0.908 U	0.908 U	0.908 U	0.908 U	0.908 U	0.908 U	0.908 U	0.908 U	0.908 U	0.908 U	0.908 U	0.908 U	0.908 U	0.908 U	0.908 U	0.908 U	0.908 U	0.908 U	0.908 U	0.908 U	0.908 U	41.6 U	0.908 U	NA
	4-Methyl-2-pentanone	55.7	0.820 U	0.820 U	0.820 U	0.820 U	0.820 U	0.820 U	0.820 U	0.820 U	0.820 U	0.820 U	0.820 U	0.820 U	0.820 U	0.820 U	0.820 U	2.05 U	2.05 U	2.05 U	2.05 U	2.05 U	2.05 U	2.05 U	2.05 U	37.5 U	0.82 U	NA
	trans-1,3-Dichloropropene	NS	0.908 U	0.908 U	0.908 U	0.908 U	0.908 U	0.908 U	0.908 U	0.908 U	0.908 U	0.908 U	0.908 U	0.908 U	0.908 U	0.908 U	0.908 U	0.908 U	0.908 U	0.908 U	0.908 U	0.908 U	0.908 U	0.908 U	0.908 U	41.6 U	0.908 U	NA
	1,1,2-Trichloroethane	0.06	1.09 U	1.09 U	1.09 U	1.09 U	1.09 U	1.09 U	1.09 U	1.09 U	1.09 U	1.09 U	1.09 U	1.09 U	1.09 U	1.09 U	1.09 U	1.09 U	1.09 U	1.09 U	1.09 U	1.09 U	1.09 U	1.09 U	1.09 U	50.0 U	1.09 U	NA
	Toluene	20	**2.48**	**18.2**	**3.61**	**22.2**	**2.59**	**12.7**	**4.67**	**1.38**	**10.9**	**11.4**	**2.22**	**2.50**	**1.90**	**1.82**	**1.84**	**16.6**	**8.03**	**6.10**	**2.44**	**7.20**	**2.08**	**2.34**	**4.52**	34.5 U	**1.91**	NA
	Dibromochloromethane	NS	1.70 U	1.70 U	1.70 U	1.70 U	1.70 U	1.70 U	1.70 U	1.70 U	1.70 U	1.70 U	1.70 U	1.70 U	1.70 U	1.70 U	1.70 U	1.70 U	1.70 U	1.70 U	1.7 U	1.70 U	1.7 U	1.7 U	1.70 U	78.0 U	1.70 U	NA
	1,2-Dibromoethane	NS	1.54 U	1.54 U	1.54 U	1.54 U	1.54 U	1.54 U	1.54 U	1.54 U	1.54 U	1.54 U	1.54 U	1.54 U	1.54 U	1.54 U	1.54 U	1.54 U	1.54 U	1.54 U	1.54 U	1.54 U	1.54 U	1.54 U	1.54 U	70.4 U	1.54 U	NA
	Tetrachloroethene	0.1	1.36 U	1.36 U	1.36 U	1.36 U	1.36 U	1.36 U	1.36 U	1.36 U	1.36 U	1.36 U	1.36 U	1.36 U	1.36 U	1.36 U	1.36 U	1.36 U	1.36 U	1.36 U	1.36 U	1.36 U	1.36 U	1.36 U	1.36 U	62.1 U	1.36 U	NA
	Chlorobenzene	6.26	0.921 U	0.921 U	0.921 U	0.921 U	0.921 U	0.921 U	0.921 U	0.921 U	0.921 U	0.921 U	0.921 U	0.921 U	0.921 U	0.921 U	0.921 U	0.921 U	0.921 U	0.921 U	0.921 U	0.921 U	0.921 U	0.921 U	0.921 U	42.2 U	0.921 U	NA
	Ethylbenzene	300	0.869 U	**2.20**	0.869 U	**7.04**	0.869 U	0.869 U	0.973	0.869 U	**1.48**	**6.25**	0.869 U	0.869 U	0.869 U	0.869 U	0.869 U	**2.55**	**1.06**	0.869 U	0.869 U	**0.890**	0.869 U	0.869 U	0.869 U	39.8 U	0.869 U	NA
	p/m-Xylene	11.8	**2.54**	**6.43**	1.74 U	**23.5**	1.74 U	**3.05**	**2.85**	1.74 U	**3.49**	**45.2**	1.74 U	1.74 U	1.74 U	**1.76**	1.74 U	**10.6**	**3.47**	**2.65**	1.74 U	**3.32**	1.74 U	1.74 U	1.74 U	79.5 U	1.74 U	NA
	Bromoform	NS	2.07 U	2.07 U	2.07 U	2.07 U	2.07 U	2.07 U	2.07 U	2.07 U	2.07 U	2.07 U	2.07 U	2.07 U	2.07 U	2.07 U	2.07 U	2.07 U	2.07 U	2.07 U	2.07 U	2.07 U	2.07 U	2.07 U	2.07 U	94.7 U	2.07 U	NA
	Styrene	2	0.852 U	0.852 U	0.852 U	0.852 U	0.852 U	0.852 U	0.852 U	0.852 U	0.852 U	0.852 U	0.852 U	0.852 U	0.852 U	0.852 U	0.852 U	0.852 U	0.852 U	0.852 U	0.852 U	0.852 U	0.852 U	0.852 U	0.852 U	39.0 U	0.852 U	NA
	1,1,2,2-Tetrachloroethane	0.02	1.37 U	1.37 U	1.37 U	1.37 U	1.37 U	1.37 U	1.37 U	1.37 U	1.37 U	1.37 U	1.37 U	1.37 U	1.37 U	1.37 U	1.37 U	1.37 U	1.37 U	1.37 U	1.37 U	1.37 U	1.37 U	1.37 U	1.37 U	62.9 U	1.37 U	NA
	o-Xylene	11.8	**1.13**	**2.42**	0.869 U	**9.34**	0.869 U	**1.06**	**1.07**	0.869 U	**1.29**	**20.1**	0.869 U	0.869 U	0.869 U	0.869 U	0.869 U	**4.91**	**1.46**	**0.912**	0.869 U	**1.20**	0.869 U	0.869 U	0.869 U	39.8 U	0.869 U	NA
	1,3-Dichlorobenzene	NS	1.20 U	1.20 U	1.20 U	**49.0**	1.20 U	1.20 U	1.20 U	1.20 U	1.20 U	1.20 U	1.20 U	1.20 U	1.20 U	1.20 U	1.20 U	1.20 U	1.20 U	1.20 U	1.2 U	1.20 U	1.20 U	1.20 U	1.20 U	55.1 U	1.20 U	NA
	1,4-Dichlorobenzene	0.18	1.20 U	1.20 U	**1.49**	1.20 U	1.20 U	1.20 U	1.20 U	1.20 U	**1.57**	1.20 U	1.20 U	1.20 U	1.20 U	1.20 U	1.20 U	1.20 U	1.20 U	1.20 U	1.2 U	1.20 U	1.20 U	1.20 U	1.20 U	55.1 U	1.20 U	NA
	1,2-Dichlorobenzene	81.74	1.20 U	1.20 U	1.20 U	1.20 U	1.20 U	1.20 U	1.20 U	1.20 U	1.20 U	1.20 U	1.20 U	1.20 U	1.20 U	1.20 U	1.20 U	1.20 U	1.20 U	1.20 U	1.2 U	1.20 U	1.20 U	1.20 U	1.20 U	55.1 U	1.20 U	NA
	1,2,4-Trichlorobenzene	NS	1.48 U	1.48 U	1.48 U	1.48 U	1.48 U	1.48 U	1.48 U	1.48 U	1.48 U	1.48 U	1.48 U	1.48 U	1.48 U	1.48 U	1.48 U	1.48 U	1.48 U	1.48 U	1.48 U	1.48 U	1.48 U	1.48 U	1.48 U	68.0 U	1.48 U	NA
	Naphthalene	14.25	**3.38**	1.05 U	1.05 U	**1.14**	1.05 U	1.05 U	1.05 U	1.05 U	1.05 U	**8.13**	1.05 U	1.05 U	1.05 U	1.05 U	**2.21**	1.05 U	1.05 U	1.05 U	1.05 U	1.05 U	1.05 U	1.05 U	1.05 U	48.0 U	1.05 U	NA
	Hexachlorobutadiene	NS	2.13 U	2.13 U	2.13 U	2.13 U	2.13 U	2.13 U	2.13 U	2.13 U	2.13 U	2.13 U	2.13 U	2.13 U	2.13 U	2.13 U	2.13 U	2.13 U	2.13 U	2.13 U	2.13 U	2.13 U	2.13 U	2.13 U	2.13 U	97.7 U	2.13 U	NA
	Xylenes (total)	11.8	**3.67**	**8.85**	1.74 U	**32.84**	1.74 U	**4.11**	**3.85**	1.74 U	**4.78**	**65.3**	1.74 U	1.74 U	1.74 U	**1.76**	1.74 U	**15.51**	**4.93**	**3.56**	1.74 U	**4.52**	1.74 U	1.74 U	1.74 U	79.5 U	1.74 U	NA
PCBs (ug/m3)	Aroclor 1016	NS	0.0833 U	0.0556 U	0.0250 U	0.0250 U	0.0333 U	0.0250 U	0.0250 U	0.0111 U	0.0250 U	0.0250 U	0.0083 U	0.0228 U	0.0250 U	0.0083 U	0.0042 U	0.0242 U	0.0044 U	0.0249 U	0.0247 U	0.0249 U	0.0249 U	0.012 U	0.024 U	NA	NA	0.0833 U
	Aroclor 1221	NS	0.0833 U	**0.0797**	0.0833 U	0.0833 U	**0.179**	0.0833 U	0.0833 U	0.037 U	0.0833 U	0.0833 U	0.0278 U	0.076 U	0.0833 U	0.0278 U	0.0139 U	0.0806 U	0.0148 U	0.083 U	0.0823 U	0.083 U	0.083 U	0.04 U	0.08 U	NA	NA	0.0833 U
	Aroclor 1232	NS	0.0833 U	0.0556 U	0.0250 U	0.0250 U	0.0333 U	0.0250 U	0.0250 U	0.0111 U	0.0250 U	0.0250 U	0.0083 U	0.0228 U	0.0250 U	0.0083 U	0.0042 U	0.0242 U	0.0044 U	0.0249 U	0.0247 U	0.0249 U	0.0249 U	0.012 U	0.024 U	NA	NA	0.0833 U
	Aroclor 1242	NS	0.0833 U	0.0556 U	**0.08833**	0.0167 U	0.0333 U	**0.368**	**0.439**	**0.519**	0.0167 U	0.0167 U	**0.653**	**0.662**	**0.432**	**0.539**	0.0028 U	0.0161 U	0.0030 U	0.0166 U	**0.6430**	0.0167 U	0.0167 U	0.008 U	1.51	NA	NA	0.0833 U
	Aroclor 1248	NS	**0.280**	**0.289**	0.0167 U	**0.267**	**0.826**	0.0167 U	0.0167 U	0.0074 U	**0.682**	**1.400**	0.0056 U	0.0152 U	0.0170 U	0.0056 U	**0.9333**	**0.847**	**4.75**	**0.690**	0.017 U	**0.335**	**1.43**	**1.78**	**0.016 U**	NA	NA	0.0833 U
	Aroclor 1254	NS	**0.206**	**0.195**	**0.05100**	0.0167 U	**0.666**	**0.521**	**0.440**	**0.430**	**0.150**	0.0167 U	**0.650**	**0.630**	**0.383**	**0.442**	0.0028 U	0.0161 U	0.0030 U	0.0166 U	0.0165 U	0.0167 U	0.0167 U	0.008 U	0.016 U	NA	NA	0.0833 U
	Aroclor 1260	NS	0.0833 U	0.0556 U	0.0167 U	0.0167 U	0.0333 U	0.0167 U	0.0167 U	0.0074 U	0.0167 U	0.0167 U	0.0056 U	0.0152 U	0.0170 U	0.0056 U	0.0028 U	0.0161 U	0.0030 U	0.0166 U	0.0165 U	0.0167 U	0.0167 U	0.008 U	0.016 U	NA	NA	0.0833 U
	Aroclor 1262	NS	NA	NA	0.0167 U	0.0167 U	NA	0.0167 U	0.0167 U	0.0074 U	0.0167 U	0.0167 U	0.0056 U	0.0152 U	0.0170 U	0.0056 U	0.0028 U	0.0161 U	0.0030 U	0.0166 U	0.0165 U	0.0167 U	0.0167 U	0.008 U	0.016 U	NA	NA	NA
	Aroclor 1268	NS	NA	NA	0.0167 U	0.0167 U	NA	0.0167 U	0.0167 U	0.0074 U	0.0167 U	0.0167 U	0.0056 U	0.0152 U	0.0170 U	0.0056 U	0.0028 U	0.0161 U	0.0030 U	0.0166 U	0.0165 U	0.0167 U	0.0167 U	0.008 U	0.016 U	NA	NA	NA
	Total PCBs	0.0005	**0.486**	**0.5637**	**0.13933**	**0.267**	**1.671**	**0.889**	**0.879**	**0.949**	**0.832**	**1.4**	**1.303**	**1.292**	**0.815**	**0.981**	**0.9333**	**0.847**	**4.75**	**0.690**	**0.643**	**0.335**	**1.43**	**1.78**	**1.51**	NA	NA	0.0833 U

Notes:
ug/m3 - micrograms per cubic meter.
J - Estimated value.
NA - Sample not analyzed for the listed analyte.
NS - No MassDEP limits exist for this analyte.
U - Compound was not detected at specified quantitation limit.
Values in **Bold** indicate the compound was detected.
TO - Toxic organics.
PCBs - Polychlorinated Biphenyls.
a - Used AAL for 1,2-Dichloroethylene.
* - MassDEP Allowable Ambient Limits (AALs), January 2012.
** - The PCB vapor sample container provided by the analytical laboratory in February 2013 was incorrect and the sample collected from the vapor discharge was not properly sealed and may have contained ambient air from within the mechanical room.

Table 7
Summary of Sub-Slab Vapor Mitigation System Emission Results
2012 through 2015
New Bedford High School
New Bedford, Massachusetts

Analysis	Analyte	VSP #:	VSP-3																					
		Sample ID:	Vapor Discharge																					
		Sample Date:	3/27/2012	4/4/2012	4/17/2012	5/14/2012	6/11/2012	7/16/2012	8/21/2012	9/18/2012	10/18/2012	11/21/2012	12/12/2012	1/15/2013	2/15/2013	3/13/2013	4/16/2013	5/16/2013	6/18/2013	7/30/2013	8/1/2013	9/16/2013	10/15/2013	11/15/2013
		AALs*																						
TO-15																								
(ug/m3)	Vinyl chloride	0.38	**1.31**	**3.53**	**6.39**	**10.9**	**6.21**	**5.93**	**10.6**	**6.44**	**17.1**	**11.4**	**6.62**	**7.90**	**10.1**	**1.77**	**8.08**	**9.74**	**11.6**	**7.59**	**10.0**	**9.25**	**8.31**	**6.13**
	Bromomethane	2.64	0.078 U	0.078 U	0.078 U	0.078 U	0.078 U	0.078 U	0.078 U	0.078 U	0.078 U	0.078 U	0.078 U	0.078 U	0.078 U	0.078 U	0.078 U	0.078 U	0.078 U	0.078 U	0.078 U	0.078 U	0.078 U	0.078 U
	Acetone	160.54	**8.58**	**5.65**	**6.94**	**7.27**	**3.30**	2.38 U	2.38 U	**2.92**	**2.45**	2.38 U	**2.59**	**5.13**	2.38 U	**11.9**	**10.6**	**30.9**	**4.85**	**5.70**	**3.09**	**30.6**	**6.65**	**4.61**
	1,1-Dichloroethene	0.02	0.079 U	0.079 U	0.079 U	0.079 U	**0.333**	**0.218**	0.079 U	0.079 U	0.079 U	0.079 U	**0.301**	**0.587**	**0.464**	**0.317**	**0.254**	**0.266**	**0.218**	**0.266**	**0.218**	**0.174**	**0.143**	**0.115**
	Methylene chloride	0.24	4.86 U	4.86 U	4.86 U	4.86 U	4.86 U	4.86 U	4.86 U	**5.56**	4.86 U	4.86 U	4.86 U	4.86 U	4.86 U	4.86 U	4.86 U	4.86 U	4.86 U	4.86 U	4.86 U	4.86 U	4.86 U	4.86 U
	trans-1,2-Dichloroethene	107.81[a]	0.793 U	0.793 U	0.793 U	0.079 U	**3.58**	**24.1**	0.079 U	0.079 U	0.079 U	0.079 U	0.079 U	**1.18**	**15.8**	**46.8**	**49.6**	**58.7**	**57.1**	**44.8**	**40.8**	**36.0**	**34.0**	**24.1**
	1,1-Dichloroethane	NS	0.809 U	0.809 U	0.809 U	0.081 U	0.081 U	0.081 U	0.081 U	0.081 U	0.081 U	0.081 U	0.081 U	0.081 U	0.081 U	0.081 U	0.081 U	0.081 U	0.081 U	0.081 U	0.081 U	0.081 U	0.081 U	0.081 U
	Methyl tert butyl ether	NS	0.721 U	0.721 U	0.721 U	0.072 U	0.072 U	0.072 U	0.072 U	0.072 U	0.072 U	0.072 U	0.072 U	0.072 U	0.072 U	0.072 U	0.072 U	0.072 U	0.072 U	0.072 U	0.072 U	0.072 U	0.072 U	0.072 U
	2-Butanone	10	**3.89**	**2.34**	**2.62**	**0.740**	**0.888**	**0.982**	**0.867**	**1.06**	**0.605**	0.590 U	**0.767**	**1.40**	**1.11**	0.590 U	0.59 U	**0.608**	**0.876**	1.48 U	**0.649**	**2.48**	**2.00**	0.590 U
	cis-1,2-Dichloroethene	107.81[a]	0.793 U	0.793 U	0.793 U	**0.309**	**1.05**	**42.8**	0.079 U	0.079 U	0.079 U	0.079 U	0.079 U	**0.127**	**3.39**	**23.7**	**48.4**	**103**	**127**	**116**	**102**	**87.6**	**86.4**	**69.0**
	Chloroform	0.04	**0.098**	0.098 U	0.098 U	0.098 U	0.098 U	**1.24**	0.098 U	0.098 U	0.098 U	0.098 U	0.098 U	0.098 U	0.098 U	0.098 U	0.098 U	0.098 U	**0.259**	**0.659**	**0.894**	**0.772**	**0.83**	**0.669**
	1,2-Dichloroethane	0.04	0.081 U	0.081 U	0.081 U	0.081 U	**0.113**	0.081 U	0.081 U	0.081 U	0.081 U	0.081 U	0.081 U	0.081 U	0.081 U	0.081 U	0.081 U	0.081 U	0.081 U	0.081 U	0.081 U	0.081 U	0.081 U	0.081 U
	1,1,1-Trichloroethane	1038.37	1.09 U	1.09 U	1.09 U	**0.164**	**0.164**	**0.174**	0.109 U	0.109 U	0.109 U	0.109 U	0.109 U	0.109 U	0.109 U	0.109 U	0.109 U	0.109 U	0.109 U	0.109 U	0.109 U	0.109 U	0.109 U	0.109 U
	Benzene	0.12	**0.370**	**0.601**	0.319 U	0.319 U	**0.946**	0.319 U	0.319 U	0.319 U	0.319 U	0.319 U	0.319 U	0.319 U	0.319 U	**0.431**	0.319 U	**0.326**	**0.671**	**0.639**	**0.387**	**0.952**	**0.933**	**0.588**
	Carbon tetrachloride	0.07	0.126 U	0.126 U	0.126 U	0.126 U	0.126 U	0.126 U	0.126 U	0.126 U	0.126 U	0.126 U	0.126 U	0.126 U	0.126 U	0.126 U	0.126 U	0.126 U	0.126 U	0.126 U	0.126 U	0.126 U	0.126 U	0.126 U
	1,2-Dichloropropane	0.05	0.092 U	0.092 U	0.092 U	0.092 U	0.092 U	0.092 U	0.092 U	0.092 U	0.092 U	0.092 U	0.092 U	0.092 U	0.092 U	0.092 U	0.092 U	0.092 U	0.092 U	0.092 U	0.092 U	0.092 U	0.092 U	0.092 U
	Bromodichloromethane	NS	1.34 U	1.34 U	1.34 U	0.134 U	0.134 U	0.134 U	0.134 U	0.134 U	0.134 U	0.134 U	0.134 U	0.134 U	0.134 U	0.134 U	0.134 U	0.134 U	0.134 U	0.134 U	0.134 U	0.134 U	0.134 U	0.134 U
	1,4-Dioxane	0.24	0.360 U	0.360 U	0.360 U	0.360 U	0.360 U	0.360 U	0.360 U	0.360 U	0.360 U	0.360 U	0.360 U	0.360 U	0.360 U	0.360 U	0.36 U	0.360 U	0.360 U	0.360 U	0.360 U	0.360 U	0.36 U	0.360 U
	Trichloroethene	0.61	**0.199**	0.107 U	0.107 U	**0.263**	**0.263**	0.107 U	0.107 U	0.107 U	0.107 U	0.107 U	0.107 U	0.107 U	**0.183**	0.107 U	0.107 U	**0.161**	0.107 U	0.107 U	**0.408**	0.107 U	0.107 U	0.107 U
	cis-1,3-Dichloropropene	NS	0.908 U	0.908 U	0.908 U	0.091 U	0.091 U	0.091 U	0.091 U	0.091 U	0.091 U	0.091 U	0.091 U	0.091 U	0.091 U	0.091 U	0.091 U	0.091 U	0.091 U	0.091 U	0.091 U	0.091 U	0.091 U	0.091 U
	4-Methyl-2-pentanone	55.7	0.820 U	0.820 U	0.820 U	0.820 U	0.820 U	0.820 U	0.820 U	0.820 U	0.820 U	0.820 U	0.820 U	0.820 U	0.820 U	0.820 U	0.82 U	**2.04**	0.82 U	0.820 U	0.820 U	**4.22**	0.82 U	**1.03**
	trans-1,3-Dichloropropene	NS	0.908 U	0.908 U	0.908 U	0.091 U	0.091 U	0.091 U	0.091 U	0.091 U	0.091 U	0.091 U	0.091 U	0.091 U	0.091 U	0.091 U	0.091 U	0.091 U	0.091 U	0.091 U	0.091 U	0.091 U	0.091 U	0.091 U
	1,1,2-Trichloroethane	0.06	0.109 U	0.109 U	0.109 U	0.109 U	0.109 U	0.109 U	0.109 U	0.109 U	0.109 U	0.109 U	0.109 U	0.109 U	0.109 U	0.109 U	0.109 U	0.109 U	0.109 U	0.109 U	0.109 U	0.109 U	0.109 U	0.109 U
	Toluene	20	**2.62**	**11.0**	**1.23**	**0.531**	**0.482**	**0.746**	**0.573**	**0.290**	**0.626**	**0.735**	**1.79**	**2.82**	**0.433**	**1.96**	**0.648**	**1.81**	**1.48**	**1.57**	**1.40**	**4.67**	**3.19**	**2.03**
	Dibromochloromethane	NS	1.70 U	1.70 U	1.70 U	0.170 U	0.170 U	0.170 U	0.170 U	0.170 U	0.170 U	0.170 U	0.170 U	0.170 U	0.170 U	0.170 U	0.17 U	0.170 U	0.170 U	0.170 U	0.170 U	0.170 U	0.17 U	0.170 U
	1,2-Dibromoethane	NS	1.54 U	0.137 U	1.54 U	0.154 U	0.154 U	0.154 U	0.154 U	0.154 U	0.154 U	0.154 U	0.154 U	0.154 U	0.154 U	0.154 U	0.154 U	0.154 U	0.154 U	0.154 U	0.154 U	0.154 U	0.154 U	0.154 U
	Tetrachloroethene	0.1	0.136 U	0.136 U	0.136 U	**0.407**	0.136 U	0.136 U	0.136 U	0.136 U	0.136 U	0.136 U	0.136 U	0.136 U	0.136 U	**0.163**	0.136 U	0.136 U	0.136 U	0.136 U	0.136 U	0.136 U	0.136 U	0.136 U
	Chlorobenzene	6.26	0.921 U	0.921 U	0.921 U	**0.308**	**0.180**	0.092 U	0.092 U	0.092 U	0.092 U	0.092 U	0.092 U	**0.129**	0.092 U	0.092 U	0.092 U	0.092 U	0.092 U	0.092 U	0.092 U	0.092 U	0.092 U	0.092 U
	Ethylbenzene	300	0.869 U	**8.51**	0.869 U	**0.573**	**0.964**	**0.834**	**0.178**	**0.426**	**0.135**	**0.178**	**0.391**	**0.934**	**0.117**	**1.80**	**0.66**	**2.10**	**0.817**	**0.465**	**0.465**	**2.83**	**0.682**	**0.964**
	p/m-Xylene	11.8	**2.13**	**35.6**	1.74 U	**1.24**	**3.71**	**3.40**	**0.608**	**1.55**	**0.369**	**0.565**	**1.23**	**3.10**	**0.326**	**8.34**	**2.67**	**8.34**	**1.89**	**1.38**	**1.48**	**10.3**	**2.16**	**3.35**
	Bromoform	NS	2.07 U	2.07 U	2.07 U	0.207 U	0.207 U	0.207 U	0.207 U	0.207 U	0.207 U	0.207 U	0.207 U	0.207 U	0.207 U	0.207 U	0.207 U	0.207 U	0.207 U	0.207 U	0.207 U	0.207 U	0.207 U	0.207 U
	Styrene	2	0.852 U	0.852 U	0.852 U	**0.438**	**0.251**	0.085 U	0.085 U	0.085 U	0.085 U	0.085 U	0.085 U	0.085 U	0.085 U	**0.302**	0.085 U	**0.158**	**0.119**	**0.358**	**0.243**	**0.272**	0.085 U	**0.651**
	1,1,2,2-Tetrachloroethane	0.02	0.137 U	0.137 U	0.137 U	0.137 U	0.137 U	0.137 U	0.137 U	0.137 U	0.137 U	0.137 U	0.137 U	0.137 U	0.137 U	0.137 U	0.137 U	0.137 U	0.137 U	0.137 U	0.137 U	0.137 U	0.137 U	0.137 U
	o-Xylene	11.8	0.869 U	**12.8**	0.869 U	**0.447**	**1.21**	**1.07**	**0.213**	**0.439**	**0.139**	**0.200**	**0.491**	**1.16**	**0.117**	**2.93**	**0.886**	**2.66**	**0.656**	**0.543**	**0.500**	**3.51**	**0.70**	**1.40**
	1,3-Dichlorobenzene	NS	1.20 U	1.20 U	1.20 U	0.120 U	0.120 U	0.120 U	0.120 U	0.120 U	0.120 U	0.120 U	0.120 U	0.120 U	0.120 U	**0.541**	0.12 U	0.120 U	0.120 U	0.120 U	**0.174**	0.120 U	**0.138**	**0.144**
	1,4-Dichlorobenzene	0.18	0.120 U	0.120 U	0.120 U	**0.138**	0.120 U	0.120 U	0.120 U	0.120 U	0.120 U	0.120 U	0.120 U	**0.409**	**0.307**	0.120 U	0.12 U	0.120 U	0.120 U	0.120 U	0.120 U	0.120 U	0.12 U	0.120 U
	1,2-Dichlorobenzene	81.74	1.20 U	1.20 U	1.20 U	**2.78**	0.120 U	0.120 U	0.120 U	0.120 U	0.120 U	0.120 U	0.120 U	**5.10**	0.120 U	0.120 U	0.12 U	0.120 U	0.120 U	0.120 U	0.120 U	0.120 U	0.12 U	0.120 U
	1,2,4-Trichlorobenzene	NS	1.48 U	1.48 U	1.48 U	**1.31**	0.371 U	0.371 U	0.371 U	0.371 U	0.371 U	0.371 U	0.371 U	0.371 U	**0.453**	0.371 U	0.371 U	0.371 U	0.371 U	0.371 U	0.371 U	0.371 U	0.371 U	0.371 U
	Naphthalene	14.25	1.05 U	1.05 U	1.05 U	**0.414**	0.262 U	0.262 U	0.262 U	0.262 U	0.262 U	0.262 U	**0.372**	**0.325**	0.262 U	**2.16**	**0.398**	**0.897**	0.262 U	**2.31**	**1.95**	**2.32**	**0.357**	**4.69**
	Hexachlorobutadiene	NS	2.13 U	2.13 U	2.13 U	0.533 U	0.533 U	0.533 U	0.533 U	0.533 U	0.533 U	0.533 U	0.533 U	0.533 U	0.533 U	0.533 U	0.533 U	0.533 U	0.533 U	0.533 U	0.533 U	0.533 U	0.533 U	0.533 U
	Xylenes (total)	11.8	**2.13**	**48.4**	1.74 U	**1.687**	**4.92**	**4.47**	**0.821**	**1.989**	**0.508**	**0.765**	**1.721**	**4.26**	**0.443**	**11.27**	**3.556**	**11.0**	**2.546**	**1.923**	**1.98**	**13.81**	**2.85**	**4.75**
PCBs															**									
(ug/m3)	Aroclor 1016	NS	0.0833 U	0.0833 U	0.0833 U	0.0833 U	0.0417 U	0.0617 U	0.0833 U	0.0833 U	0.0833 U	0.0833 U	0.0139 U	0.0556 U	0.0139 U	0.0556 U	0.0556 U	0.0833 U	0.0556 U	0.0833 U	0.0833 U	0.0556 U	0.0833 U	0.0833 U
	Aroclor 1221	NS	0.0833 U	0.0833 U	0.0833 U	0.0833 U	0.0417 U	0.0617 U	0.0833 U	0.0833 U	0.0833 U	0.0833 U	0.0139 U	0.0556 U	0.0139 U	0.0556 U	0.0556 U	0.0833 U	0.0556 U	0.0833 U	0.0833 U	0.0556 U	0.0833 U	0.0833 U
	Aroclor 1232	NS	0.0833 U	0.0833 U	0.0833 U	0.0833 U	0.0417 U	0.0617 U	0.0833 U	0.0833 U	0.0833 U	0.0833 U	0.0139 U	0.0556 U	0.0139 U	0.0556 U	0.0556 U	0.0833 U	0.0556 U	0.0833 U	0.0833 U	0.0556 U	0.0833 U	0.0833 U
	Aroclor 1242	NS	0.0833 U	0.0833 U	0.0833 U	0.0833 U	0.0417 U	0.0617 U	0.0833 U	0.0833 U	0.0833 U	0.0833 U	0.0139 U	0.0556 U	**0.0245**	0.0556 U	0.0556 U	0.0833 U	0.0556 U	0.0833 U	0.0833 U	0.0556 U	0.0833 U	0.0833 U
	Aroclor 1248	NS	0.0833 U	0.0833 U	0.0833 U	0.0833 U	0.0417 U	0.0617 U	0.0833 U	0.0833 U	0.0833 U	0.0833 U	0.0139 U	0.0556 U	0.0139 U	0.0556 U	0.0556 U	0.0833 U	0.0556 U	0.0833 U	0.0833 U	0.0556 U	0.0833 U	0.0833 U
	Aroclor 1254	NS	0.0833 U	0.0833 U	0.0833 U	0.0833 U	0.0417 U	0.0617 U	0.0833 U	0.0833 U	**0.110**	0.0833 U	0.0139 U	0.0556 U	**0.0460**	0.0556 U	0.0556 U	0.0833 U	0.0556 U	0.0833 U	0.0833 U	0.0556 U	0.0833 U	0.0833 U
	Aroclor 1260	NS	0.0833 U	0.0833 U	0.0833 U	0.0833 U	0.0417 U	0.0617 U	0.0833 U	0.0833 U	0.0833 U	0.0833 U	0.0139 U	0.0556 U	0.0139 U	0.0556 U	0.0556 U	0.0833 U	0.0556 U	0.0833 U	0.0833 U	0.0556 U	0.0833 U	0.0833 U
	Aroclor 1262	NS	NA	NA	NA	NA	NA	NA	NA	NA	NA	NA	NA	NA	NA	NA	NA	NA	NA	NA	NA	NA	NA	NA
	Aroclor 1268	NS	NA	NA	NA	NA	NA	NA	NA	NA	NA	NA	NA	NA	NA	NA	NA	NA	NA	NA	NA	NA	NA	NA
	Total PCBs	0.0005	0.0833 U	0.0833 U	0.0833 U	0.0833 U	0.0417 U	0.0617 U	0.0833 U	0.0833 U	**0.110 J**	0.0833 U	0.0139 U	0.0556 U	**0.0705**	0.0556 U	0.0556 U	0.0833 U	0.0556 U	0.0833 U	0.0833 U	0.0556 U	0.0833 U	0.0833 U

Notes:
ug/m3 - micrograms per cubic meter.
J - Estimated value.
NA - Sample not analyzed for the listed analyte.
NS - No MassDEP limits exist for this analyte.
U - Compound was not detected at specified quantitation limit.
Values in **Bold** indicate the compound was detected.
TO - Toxic organics.
PCBs - Polychlorinated Biphenyls.
a - Used AAL for 1,2-Dichloroethylene.
* - MassDEP Allowable Ambient Limits (AALs), January 2012.
** - The PCB vapor sample container provided by the analytical laboratory in February 2013 was incorrect and the sample collected from the vapor discharge was not properly sealed and may have contained ambient air from within the mechanical room.

Table 7
Summary of Sub-Slab Vapor Mitigation System Emission Results
2012 through 2015
New Bedford High School
New Bedford, Massachusetts

Analysis	Analyte	VSP #:	VSP-3																					
		Sample ID:	Vapor Discharge																					
		Sample Date:	12/17/2013	1/16/2014	2/14/2014	3/17/2014	4/21/2014	5/19/2014	6/17/2014	7/15/2014	8/14/2014	9/10/2014	10/15/2014	11/14/2014	12/10/2014	1/14/2015	2/17/2015	3/16/2015	4/13/2015	5/14/2015	6/4/2015	8/14/2015	9/14/2015	10/13/2015
		AALs*																						
TO-15																								
(ug/m3)	Vinyl chloride	0.38	**7.52**	**0.307**	**0.228**	**9.87**	**7.26**	**5.93**	**5.60**	**5.80**	**6.03**	**4.06**	**3.22**	**0.450**	**2.30**	**6.01**	**3.91**	**4.06**	**3.09**	**0.289**	**0.192**	**0.199**	**7.67**	**5.85**
	Bromomethane	2.64	0.078 U	0.078 U	0.078 U	0.078 U	0.078 U	0.078 U	0.078 U	**0.105**	0.078 U	0.078 U	0.078 U	0.078 U	0.078 U	0.078 U	0.078 U	0.078 U	0.078 U	0.078 U	0.078 U	0.078 U	0.078 U	0.078 U
	Acetone	160.54	**7.36**	2.38 U	**7.60**	**4.25**	**4.54**	**5.25**	2.38 U	**5.30**	**8.05**	2.38 U	**6.46**	2.38 U	2.38 U	**3.18**	**2.61**	2.38 U	2.38 U	2.38 U	2.38 U	2.38 U	2.38 U	5.32
	1,1-Dichloroethene	0.02	**0.103**	0.079 U	0.079 U	0.079 U	0.079 U	0.079 U	0.079 U	0.079 U	0.079 U	0.079 U	0.079 U	0.079 U	0.079 U	0.079 U	0.079 U	0.079 U	0.079 U	0.079 U	0.079 U	0.079 U	0.079 U	0.079 U
	Methylene chloride	0.24	4.86 U	4.86 U	4.86 U	4.86 U	4.86 U	4.86 U	4.86 U	4.86 U	4.86 U	4.86 U	4.86 U	4.86 U	4.86 U	4.86 U	1.74 U	1.74 U	1.74 U	1.74 U	1.74 U	1.74 U	1.74 U	1.74 U
	trans-1,2-Dichloroethene	107.81[a]	**20.4**	**11.0**	**10.9**	**18.6**	**13.0**	**12.2**	**11.1**	**9.99**	**10.0**	**10.3**	**7.97**	**5.59**	**5.11**	**3.45**	**3.53**	**4.2**	**4.48**	**4.92**	**5.27**	**5.67**	**4.4**	**3.56**
	1,1-Dichloroethane	NS	0.081 U	0.081 U	0.081 U	0.081 U	0.081 U	0.081 U	0.081 U	0.081 U	0.081 U	0.081 U	0.081 U	0.081 U	0.081 U	0.081 U	0.081 U	0.081 U	0.081 U	0.081 U	0.081 U	0.081 U	0.081 U	0.081 U
	Methyl tert butyl ether	NS	0.072 U	0.072 U	0.072 U	0.072 U	0.072 U	0.072 U	0.072 U	0.072 U	0.072 U	0.072 U	0.072 U	0.072 U	0.072 U	0.072 U	0.072 U	0.072 U	0.072 U	0.072 U	0.721 U	0.721 U	0.721 U	0.721 U
	2-Butanone	10	0.590 U	0.590 U	**2.02**	**0.776**	**0.711**	**1.07**	0.590 U	**0.785**	**1.38**	0.590 U	0.590 U	0.590 U	0.590 U	1.47 U	1.47 U	1.47 U	1.47 U	1.47 U	1.47 U	1.47 U	**2.98**	1.47 U
	cis-1,2-Dichloroethene	107.81[a]	**61.1**	**32.2**	**31.2**	**48.8**	**35.7**	**35.1**	**41.2**	**37.5**	**27.8**	**27.3**	**23**	**16.8**	**13.8**	**8.92**	**8.41**	**10.1**	**11.1**	**12.3**	**11.4**	**12.1**	**11**	**9.32**
	Chloroform	0.04	**0.630**	**0.440**	**0.498**	**1.13**	**0.845**	**1.05**	**1.32**	**1.38**	**1.05**	**0.962**	**0.742**	**0.972**	**0.415**	**0.527**	**0.444**	**0.493**	**0.63**	**0.943**	**0.986**	**1.10**	**1.11**	**1.00**
	1,2-Dichloroethane	0.04	0.081 U	0.081 U	0.081 U	0.081 U	0.081 U	0.081 U	0.081 U	0.081 U	0.081 U	0.081 U	0.081 U	0.081 U	0.081 U	0.081 U	0.081 U	0.081 U	0.081 U	0.081 U	0.081 U	0.081 U	0.081 U	0.081 U
	1,1,1-Trichloroethane	1038.37	0.109 U	0.109 U	0.109 U	0.109 U	0.109 U	0.109 U	0.109 U	0.109 U	0.109 U	0.109 U	0.109 U	0.109 U	0.109 U	0.109 U	0.109 U	0.109 U	0.109 U	0.109 U	0.109 U	0.109 U	0.109 U	0.109 U
	Benzene	0.12	**0.374**	0.319 U	**0.808**	**1.33**	**1.65**	**1.81**	0.319 U	0.319 U	0.319 U	0.319 U	**2.44**	**1.24**	0.319 U	0.319 U	**0.371**	0.319 U	0.319 U	0.319 U	0.403	0.319 U	**0.348**	**3.32**
	Carbon tetrachloride	0.07	0.126 U	0.126 U	0.126 U	0.126 U	0.126 U	0.126 U	0.126 U	0.126 U	0.126 U	0.126 U	0.126 U	0.126 U	0.126 U	0.126 U	0.126 U	0.126 U	0.126 U	0.126 U	0.126 U	0.126 U	0.126 U	0.126 U
	1,2-Dichloropropane	0.05	0.092 U	0.092 U	0.092 U	0.092 U	0.092 U	0.092 U	0.092 U	0.092 U	0.092 U	0.092 U	0.092 U	0.092 U	0.092 U	0.092 U	0.092 U	0.092 U	0.092 U	0.092 U	0.092 U	0.092 U	0.092 U	0.092 U
	Bromodichloromethane	NS	0.134 U	0.134 U	0.134 U	0.134 U	0.134 U	0.134 U	0.134 U	0.134 U	0.134 U	0.134 U	0.134 U	0.134 U	0.134 U	0.134 U	0.134 U	0.134 U	0.134 U	0.134 U	0.134 U	0.134 U	0.134 U	0.134 U
	1,4-Dioxane	0.24	0.360 U	0.360 U	0.360 U	0.360 U	0.360 U	0.360 U	0.360 U	0.360 U	0.360 U	0.360 U	0.360 U	0.360 U	0.360 U	0.360 U	0.360 U	0.360 U	0.360 U	0.360 U	0.360 U	0.360 U	0.360 U	0.360 U
	Trichloroethene	0.61	0.107 U	0.107 U	0.107 U	0.107 U	0.107 U	0.107 U	0.107 U	0.107 U	0.107 U	0.107 U	0.107 U	0.107 U	0.107 U	0.107 U	0.107 U	0.107 U	0.107 U	0.107 U	0.107 U	0.107 U	**0.355**	0.107 U
	cis-1,3-Dichloropropene	NS	0.091 U	0.091 U	0.091 U	0.091 U	0.091 U	0.091 U	0.091 U	0.091 U	0.091 U	0.091 U	0.091 U	0.091 U	0.091 U	0.091 U	0.091 U	0.091 U	0.091 U	0.091 U	0.091 U	0.091 U	0.091 U	0.091 U
	4-Methyl-2-pentanone	55.7	0.820 U	0.820 U	0.820 U	0.820 U	0.820 U	0.820 U	0.820 U	0.820 U	0.820 U	0.820 U	0.820 U	0.820 U	0.820 U	0.820 U	2.05 U	2.05 U	2.05 U	2.05 U	2.05 U	2.05 U	2.05 U	2.05 U
	trans-1,3-Dichloropropene	NS	0.091 U	0.091 U	0.091 U	0.091 U	0.091 U	0.091 U	0.091 U	0.091 U	0.091 U	0.091 U	0.091 U	0.091 U	0.091 U	0.091 U	0.091 U	0.091 U	0.091 U	0.091 U	0.091 U	0.091 U	0.091 U	0.091 U
	1,1,2-Trichloroethane	0.06	0.109 U	0.109 U	0.109 U	0.109 U	0.109 U	0.109 U	0.109 U	0.109 U	0.109 U	0.109 U	0.109 U	0.109 U	0.109 U	0.109 U	0.109 U	0.109 U	0.109 U	0.109 U	0.109 U	0.109 U	0.109 U	0.109 U
	Toluene	20	**2.34**	**0.513**	**16.8**	**0.516**	**2.09**	**1.38**	**0.833**	**1.13**	**0.558**	**0.558**	**1.68**	**1.51**	**0.324**	**0.381**	**1.80**	**0.66**	**0.54**	**0.516**	**6.59**	**0.505**	**0.592**	**3.23**
	Dibromochloromethane	NS	0.170 U	0.170 U	0.170 U	0.170 U	0.170 U	0.170 U	0.170 U	0.170 U	0.170 U	0.170 U	0.170 U	0.170 U	0.170 U	0.170 U	0.170 U	0.170 U	0.170 U	0.170 U	0.170 U	0.170 U	0.170 U	0.170 U
	1,2-Dibromoethane	NS	0.154 U	0.154 U	0.154 U	0.154 U	0.154 U	0.154 U	0.154 U	0.154 U	0.154 U	0.154 U	0.154 U	0.154 U	0.154 U	0.154 U	0.154 U	0.154 U	0.154 U	0.154 U	0.154 U	0.154 U	0.154 U	0.154 U
	Tetrachloroethene	0.1	0.136 U	0.136 U	0.136 U	0.136 U	**0.142**	**0.163**	0.136 U	0.136 U	0.136 U	0.136 U	0.136 U	**0.190**	0.136 U	0.136 U	**10.7**	0.136 U	0.136 U	0.136 U	0.136 U	0.136 U	0.136 U	0.136 U
	Chlorobenzene	6.26	0.092 U	0.092 U	0.092 U	0.092 U	**0.253**	0.092 U	0.092 U	0.092 U	0.092 U	0.092 U	0.092 U	0.092 U	0.092 U	0.092 U	0.092 U	0.092 U	0.092 U	0.092 U	0.092 U	0.092 U	**0.428**	0.092 U
	Ethylbenzene	300	**0.717**	**0.087**	**5.13**	0.087 U	**0.361**	**0.343**	**0.191**	**0.178**	0.087 U	0.148	0.274	**0.365**	**0.113**	**0.10**	**0.356**	**0.182**	0.087 U	**0.10**	**1.41**	0.087 U	**0.113**	**0.469**
	p/m-Xylene	11.8	**2.58**	**0.304**	**18.9**	**0.252**	**1.32**	**1.06**	**0.621**	**0.617**	**0.213**	**0.274**	**1.01**	**1.31**	**0.343**	**0.274**	**1.27**	**0.66**	**0.308**	**0.43**	**5.00**	**0.28**	**0.413**	**1.57**
	Bromoform	NS	0.207 U	0.207 U	0.207 U	0.207 U	0.207 U	0.207 U	0.207 U	0.207 U	0.207 U	0.207 U	0.207 U	0.207 U	0.207 U	0.207 U	0.207 U	0.207 U	0.207 U	0.207 U	0.207 U	0.207 U	0.207 U	0.207 U
	Styrene	2	0.085 U	0.085 U	**0.264**	0.085 U	0.085 U	0.085 U	0.085 U	0.085 U	0.085 U	0.085 U	**0.106**	0.085 U	0.085 U	0.085 U	0.085 U	0.085 U	0.085 U	0.085 U	0.085 U	0.085 U	**0.221**	**0.111**
	1,1,2,2-Tetrachloroethane	0.02	0.137 U	0.137 U	0.137 U	0.137 U	0.137 U	0.137 U	0.137 U	0.137 U	0.137 U	0.137 U	0.137 U	0.137 U	0.137 U	0.137 U	0.137 U	0.137 U	0.137 U	0.137 U	0.137 U	0.137 U	0.137 U	0.137 U
	o-Xylene	11.8	**0.890**	**0.109**	**7.12**	**0.100**	**0.426**	**0.434**	**0.261**	**0.187**	0.087 U	**0.104**	**0.365**	**0.482**	**0.135**	**0.10**	**0.456**	**0.243**	**0.113**	**0.174**	**1.76**	**0.100**	**0.165**	**0.513**
	1,3-Dichlorobenzene	NS	0.120 U	0.120 U	**42.9**	0.120 U	0.120 U	0.120 U	0.120 U	0.120 U	0.120 U	0.120 U	0.120 U	0.120 U	0.120 U	0.120 U	0.120 U	0.120 U	0.120 U	0.120 U	0.120 U	0.120 U	**0.180**	0.120 U
	1,4-Dichlorobenzene	0.18	0.120 U	0.120 U	0.120 U	0.120 U	**0.259**	0.120 U	0.120 U	0.120 U	0.120 U	0.120 U	0.120 U	0.120 U	0.120 U	0.120 U	0.120 U	0.120 U	0.120 U	0.120 U	0.120 U	0.120 U	**1.21**	0.120 U
	1,2-Dichlorobenzene	81.74	0.120 U	0.120 U	0.120 U	0.120 U	**4.460**	0.120 U	0.120 U	0.120 U	0.120 U	0.120 U	0.120 U	0.120 U	0.120 U	0.120 U	0.120 U	0.120 U	0.120 U	0.120 U	0.120 U	0.120 U	**6.43**	0.120 U
	1,2,4-Trichlorobenzene	NS	0.371 U	0.371 U	0.371 U	0.371 U	0.371 U	0.371 U	0.371 U	0.371 U	0.371 U	0.371 U	0.371 U	0.371 U	0.371 U	0.371 U	0.371 U	0.371 U	0.371 U	0.371 U	0.371 U	0.371 U	0.371 U	0.371 U
	Naphthalene	14.25	0.262 U	0.262 U	**0.682**	0.262 U	0.262 U	**0.461**	**0.294**	0.262 U	0.262 U	**0.362**	**0.341**	**0.315**	0.262 U	0.262 U	0.262 U	0.262 U	0.288	0.288	**0.398**	**0.315**	**1.96**	0.262 U
	Hexachlorobutadiene	NS	0.533 U	0.533 U	0.533 U	0.533 U	0.533 U	0.533 U	0.533 U	0.533 U	0.533 U	0.533 U	0.533 U	0.533 U	0.533 U	0.533 U	0.533 U	0.533 U	0.533 U	0.533 U	0.533 U	0.533 U	0.533 U	0.533 U
	Xylenes (total)	11.8	**3.47**	**0.413**	**26.02**	**0.352**	**1.746**	**1.494**	**0.882**	**0.804**	**0.21**	**0.378**	**1.375**	**1.792**	**0.48**	**0.378**	**1.73**	**0.90**	**0.42**	**0.60**	**6.76**	**0.380**	**0.578**	**2.08**
PCBs																								
(ug/m3)	Aroclor 1016	NS	0.0556 U	0.0250 U	0.0250 U	0.0333 U	0.0250 U	0.0250 U	0.0111 U	0.0250 U	0.0250 U	0.0083 U	0.0228 U	0.0250 U	0.0083 U	0.0106 U	0.0241 U	0.0211 U	0.024 U	0.0246 U	0.0246 U	0.025 U	0.012 U	0.024 U
	Aroclor 1221	NS	0.0556 U	0.0833 U	0.0833 U	0.0333 U	0.0833 U	0.0833 U	0.037 U	0.0833 U	0.0833 U	0.0278 U	0.076 U	0.0833 U	0.0278 U	0.0354 U	0.080 U	0.070 U	0.080 U	0.082 U	0.082 U	0.0833 U	0.040 U	0.080 U
	Aroclor 1232	NS	0.0556 U	0.0250 U	0.0250 U	0.0333 U	0.0250 U	0.0250 U	0.0111 U	0.0250 U	0.0250 U	0.0083 U	0.0228 U	0.0250 U	0.0083 U	0.0106 U	0.0241 U	0.0211 U	0.024 U	0.0246 U	0.0246 U	0.025 U	0.012 U	0.024 U
	Aroclor 1242	NS	0.0556 U	0.0167 U	0.0167 U	0.0333 U	0.0167 U	0.0167 U	0.0074 U	0.0167 U	0.0167 U	0.0056 U	**0.0231**	**0.0230**	**0.0126**	0.0071 U	0.0161 U	0.014 U	0.016 U	0.0164 U	0.0167 U	0.0167 U	0.00797 U	0.016 U
	Aroclor 1248	NS	0.0556 U	0.0167 U	0.0167 U	0.0333 U	0.0167 U	0.0167 U	0.0074 U	0.0167 U	0.0167 U	0.0056 U	0.0152 U	0.0170 U	0.0056 U	0.0071 U	0.0161 U	0.014 U	0.016 U	0.0164 U	0.0167 U	0.0167 U	0.00797 U	0.016 U
	Aroclor 1254	NS	0.0556 U	0.0167 U	0.0167 U	0.0333 U	0.0167 U	0.0167 U	0.0074 U	0.0167 U	0.0167 U	0.0056 U	0.0152 U	0.0170 U	0.0056 U	0.0071 U	0.0161 U	0.014 U	0.016 U	0.0164 U	0.0167 U	0.0167 U	0.00797 U	0.016 U
	Aroclor 1260	NS	0.0556 U	0.0167 U	0.0167 U	0.0333 U	0.0167 U	0.0167 U	0.0074 U	0.0167 U	0.0167 U	0.0056 U	0.0152 U	0.0170 U	0.0056 U	0.0071 U	0.0161 U	0.014 U	0.016 U	0.0164 U	0.0167 U	0.0167 U	0.00797 U	0.016 U
	Aroclor 1262	NS	NA	0.0167 U	0.0167 U	NA	0.0167 U	0.0167 U	0.0074 U	0.0167 U	0.0167 U	0.0056 U	0.0152 U	0.0170 U	0.0056 U	0.0071 U	0.0161 U	0.014 U	0.016 U	0.0164 U	0.0167 U	0.0167 U	0.00797 U	0.016 U
	Aroclor 1268	NS	NA	0.0167 U	0.0167 U	NA	0.0167 U	0.0167 U	0.0074 U	0.0167 U	0.0167 U	0.0056 U	0.0152 U	0.0170 U	0.0056 U	0.0071 U	0.0161 U	0.014 U	0.016 U	0.0164 U	0.0167 U	0.0167 U	0.00797 U	0.016 U
	Total PCBs	0.0005	0.0556 U	0.0833 U	0.0833 U	0.0333 U	0.0833 U	0.0833 U	0.037 U	0.0833 U	0.0833 U	0.0278 U	**0.0231**	**0.0230**	**0.0126**	0.0354 U	0.0803 U	0.014 U	0.016 U	0.082 U	0.083 U	0.0833 U	0.040 U	0.016 U

Notes:
ug/m3 - micrograms per cubic meter.
J - Estimated value.
NA - Sample not analyzed for the listed analyte.
NS - No MassDEP limits exist for this analyte.
U - Compound was not detected at specified quantitation limit.
Values in **Bold** indicate the compound was detected.
TO - Toxic organics.
PCBs - Polychlorinated Biphenyls.
a - Used AAL for 1,2-Dichloroethylene.
* - MassDEP Allowable Ambient Limits (AALs), January 2012.
** - The PCB vapor sample container provided by the analytical laboratory in February 2013 was incorrect and the sample collected from the vapor discharge was not properly sealed and may have contained ambient air from within the mechanical room.

FIGURES

FIGURE 1

SITE AERIAL PHOTOGRAPH
New Bedford High School
NEW BEDFORD, MASSACHUSETTS

R:\Projects\GIS_2007\54634_NBedford\FIG1_NEWBEDHISCH_REV031710.mxd

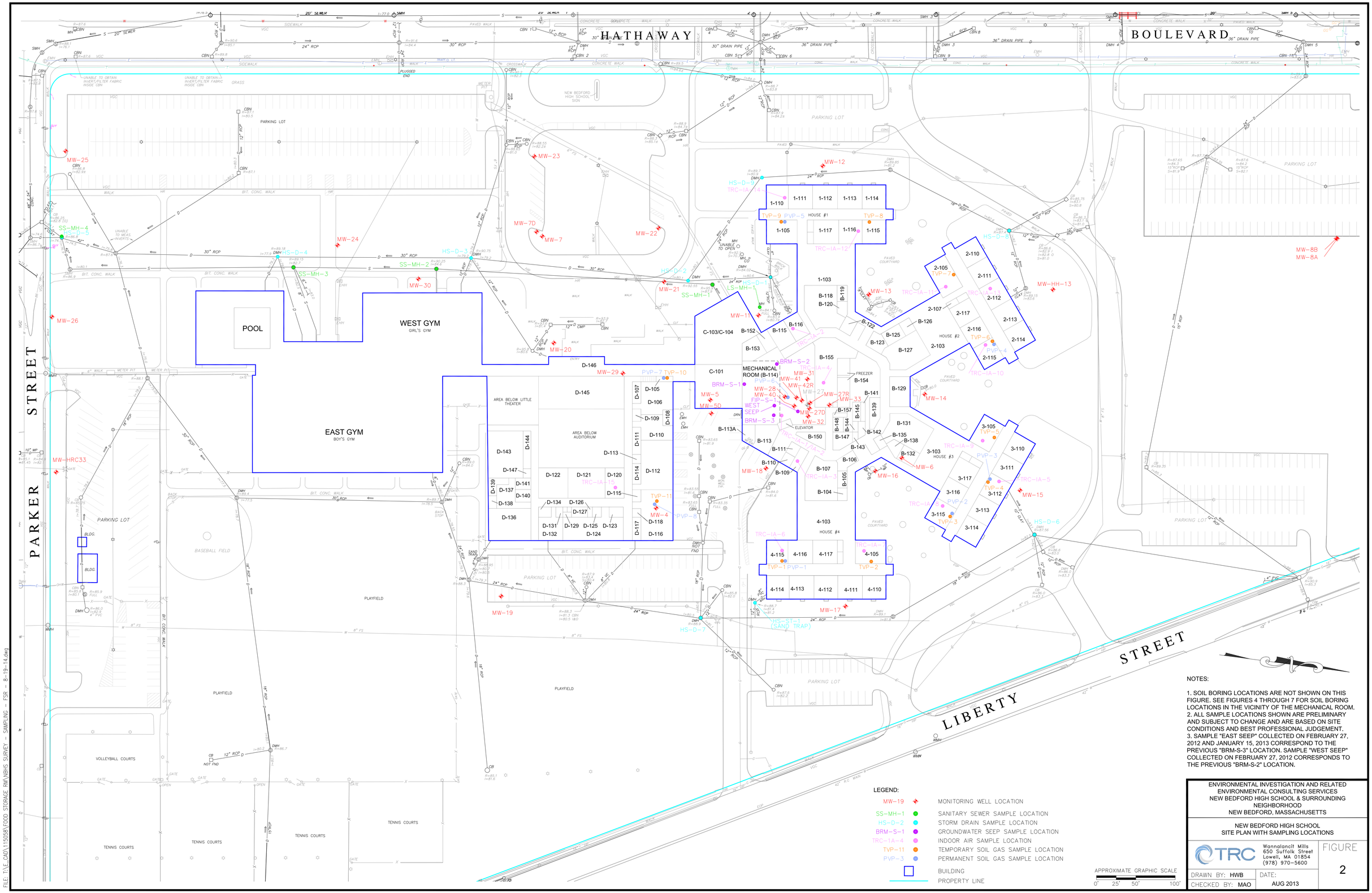

NOTES:

1. SOIL BORING LOCATIONS ARE NOT SHOWN ON THIS FIGURE. SEE FIGURES 4 THROUGH 7 FOR SOIL BORING LOCATIONS IN THE VICINITY OF THE MECHANICAL ROOM.
2. ALL SAMPLE LOCATIONS SHOWN ARE PRELIMINARY AND SUBJECT TO CHANGE AND ARE BASED ON SITE CONDITIONS AND BEST PROFESSIONAL JUDGEMENT.
3. SAMPLE "EAST SEEP" COLLECTED ON FEBRUARY 27, 2012 AND JANUARY 15, 2013 CORRESPOND TO THE PREVIOUS "BRM-S-3" LOCATION. SAMPLE "WEST SEEP" COLLECTED ON FEBRUARY 27, 2012 CORRESPONDS TO THE PREVIOUS "BRM-S-2" LOCATION.

ENVIRONMENTAL INVESTIGATION AND RELATED ENVIRONMENTAL CONSULTING SERVICES
NEW BEDFORD HIGH SCHOOL & SURROUNDING NEIGHBORHOOD
NEW BEDFORD, MASSACHUSETTS

NEW BEDFORD HIGH SCHOOL
SITE PLAN WITH SAMPLING LOCATIONS

TRC
Wannalancit Mills
650 Suffolk Street
Lowell, MA 01854
(978) 970-5600

FIGURE 2

DRAWN BY: HWB
DATE: AUG 2013
CHECKED BY: MAO

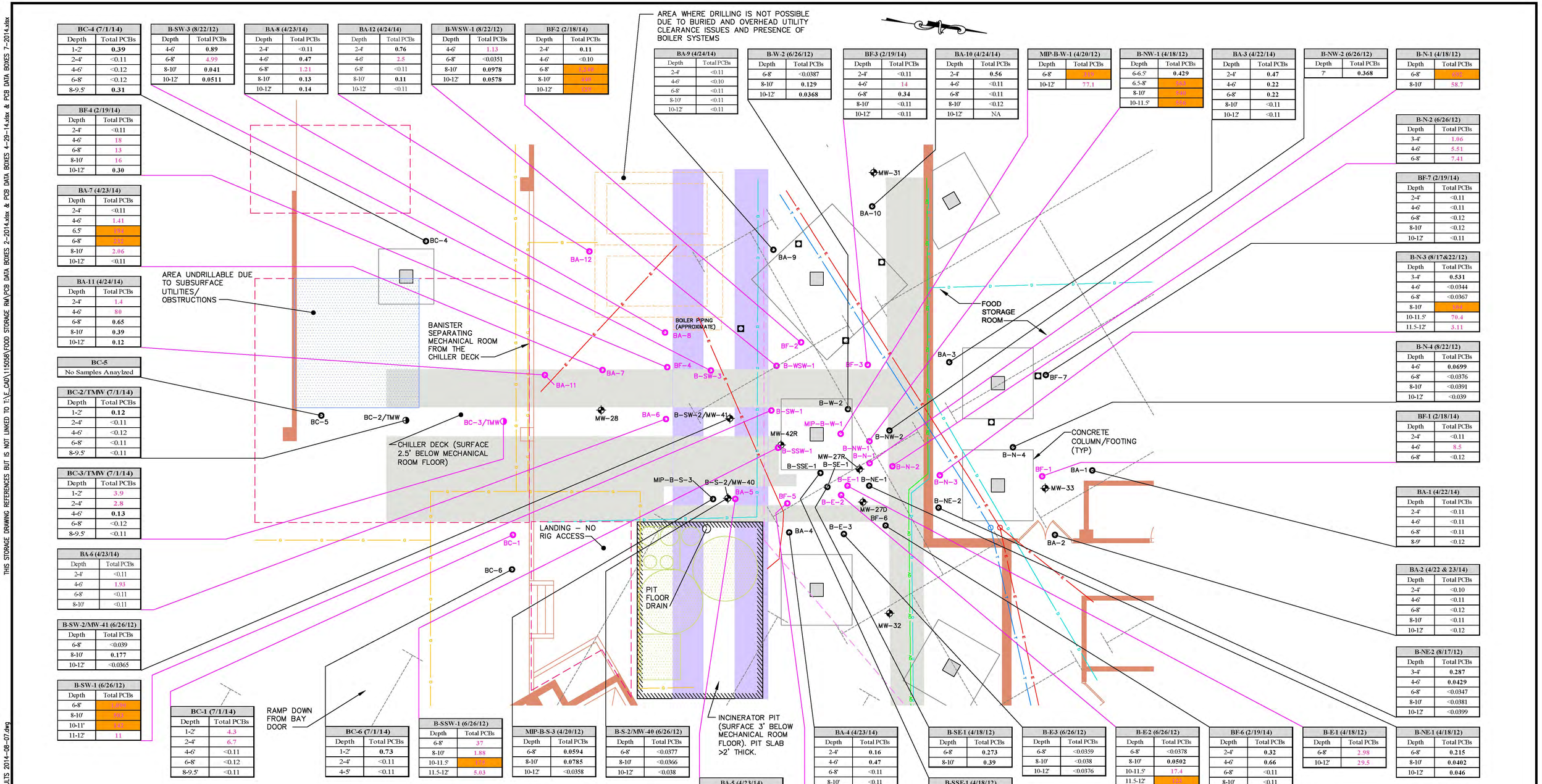

BC-4 (7/1/14)	
Depth	Total PCBs
1-2'	**0.39**
2-4'	<0.11
4-6'	<0.12
6-8'	<0.12
8-9.5'	**0.31**

B-SW-3 (8/22/12)	
Depth	Total PCBs
4-6'	**0.89**
6-8'	4.99
8-10'	**0.041**
10-12'	**0.0511**

BA-8 (4/23/14)	
Depth	Total PCBs
2-4'	<0.11
4-6'	**0.47**
6-8'	1.21
8-10'	**0.13**
10-12'	**0.14**

BA-12 (4/24/14)	
Depth	Total PCBs
2-4'	**0.76**
4-6'	2.5
6-8'	<0.11
8-10'	**0.11**
10-12'	<0.11

B-WSW-1 (8/22/12)	
Depth	Total PCBs
4-6'	1.13
6-8'	<0.0351
8-10'	**0.0978**
10-12'	**0.0578**

BF-2 (2/18/14)	
Depth	Total PCBs
2-4'	**0.11**
4-6'	<0.10
6-8'	2,310
8-10'	830
10-12'	229

BF-4 (2/19/14)	
Depth	Total PCBs
2-4'	<0.11
4-6'	18
6-8'	13
8-10'	16
10-12'	**0.30**

BA-7 (4/23/14)	
Depth	Total PCBs
2-4'	<0.11
4-6'	1.41
6.5'	334
6-8'	322
8-10'	2.06
10-12'	<0.11

BA-11 (4/24/14)	
Depth	Total PCBs
2-4'	1.4
4-6'	80
6-8'	**0.65**
8-10'	**0.39**
10-12'	**0.12**

BC-5
No Samples Anaylzed

BC-2/TMW (7/1/14)	
Depth	Total PCBs
1-2'	**0.12**
2-4'	<0.11
4-6'	<0.12
6-8'	<0.11
8-9.5'	<0.11

BC-3/TMW (7/1/14)	
Depth	Total PCBs
1-2'	3.9
2-4'	2.8
4-6'	**0.13**
6-8'	<0.12
8-9.5'	<0.11

BA-6 (4/23/14)	
Depth	Total PCBs
2-4'	<0.11
4-6'	1.93
6-8'	<0.11
8-10'	<0.11

B-SW-2/MW-41 (6/26/12)	
Depth	Total PCBs
6-8'	<0.039
8-10'	**0.177**
10-12'	<0.0365

B-SW-1 (6/26/12)	
Depth	Total PCBs
6-8'	2,800
8-10'	980
10-11'	152
11-12'	11

BA-9 (4/24/14)	
Depth	Total PCBs
2-4'	<0.11
4-6'	<0.10
6-8'	<0.11
8-10'	<0.11
10-12'	<0.11

B-W-2 (6/26/12)	
Depth	Total PCBs
6-8'	<0.0387
8-10'	**0.129**
10-12'	**0.0368**

BF-3 (2/19/14)	
Depth	Total PCBs
2-4'	<0.11
4-6'	14
6-8'	**0.34**
8-10'	<0.11
10-12'	<0.11

BA-10 (4/24/14)	
Depth	Total PCBs
2-4'	**0.56**
4-6'	<0.11
6-8'	<0.11
8-10'	<0.12
10-12'	NA

MIP-B-W-1 (4/20/12)	
Depth	Total PCBs
6-8'	819
10-12'	77.1

B-NW-1 (4/18/12)	
Depth	Total PCBs
6-6.5'	**0.429**
6.5-8'	264
8-10'	640
10-11.5'	556

BA-3 (4/22/14)	
Depth	Total PCBs
2-4'	**0.47**
4-6'	**0.22**
6-8'	**0.22**
8-10'	<0.11
10-12'	<0.11

B-NW-2 (6/26/12)	
Depth	Total PCBs
7'	**0.368**

B-N-1 (4/18/12)	
Depth	Total PCBs
6-8'	692
8-10'	58.7

B-N-2 (6/26/12)	
Depth	Total PCBs
3-4'	1.06
4-6'	5.51
6-8'	7.41

BF-7 (2/19/14)	
Depth	Total PCBs
2-4'	<0.11
4-6'	<0.11
6-8'	<0.12
8-10'	<0.12
10-12'	<0.11

B-N-3 (8/17&22/12)	
Depth	Total PCBs
3-4'	**0.531**
4-6'	<0.0344
6-8'	<0.0367
8-10'	3.01
10-11.5'	70.4
11.5-12'	3.11

B-N-4 (8/22/12)	
Depth	Total PCBs
4-6'	**0.0699**
6-8'	<0.0376
8-10'	<0.0391
10-12'	<0.039

BF-1 (2/18/14)	
Depth	Total PCBs
2-4'	<0.11
4-6'	8.5
6-8'	<0.12

BA-1 (4/22/14)	
Depth	Total PCBs
2-4'	<0.11
4-6'	<0.11
6-8'	<0.11
8-9'	<0.12

BA-2 (4/22 & 23/14)	
Depth	Total PCBs
2-4'	<0.10
4-6'	<0.11
6-8'	<0.12
8-10'	<0.11
10-12'	<0.12

B-NE-2 (8/17/12)	
Depth	Total PCBs
3-4'	**0.287**
4-6'	**0.0429**
6-8'	<0.0347
8-10'	<0.0381
10-12'	<0.0399

BC-1 (7/1/14)	
Depth	Total PCBs
1-2'	4.3
2-4'	6.7
4-6'	<0.11
6-8'	<0.12
8-9.5'	<0.11

BC-6 (7/1/14)	
Depth	Total PCBs
1-2'	**0.73**
2-4'	<0.11
4-5'	<0.11

B-SSW-1 (6/26/12)	
Depth	Total PCBs
6-8'	37
8-10'	1.88
10-11.5'	175
11.5-12'	5.03

MIP-B-S-3 (4/20/12)	
Depth	Total PCBs
6-8'	**0.0594**
8-10'	**0.0785**
10-12'	<0.0358

B-S-2/MW-40 (6/26/12)	
Depth	Total PCBs
6-8'	<0.0377
8-10'	<0.0366
10-12'	<0.038

BA-5 (4/23/14)	
Depth	Total PCBs
2-4'	1.3
4-6'	<0.11

BA-4 (4/23/14)	
Depth	Total PCBs
2-4'	**0.16**
4-6'	**0.47**
6-8'	<0.11
8-10'	<0.11
10-12'	<0.11

BF-5 (2/19/14)	
Depth	Total PCBs
2-4'	1.8
4-6'	**0.74**
6-8'	<0.11
8-10'	<0.11
10-12'	<0.11

B-SE-1 (4/18/12)	
Depth	Total PCBs
6-8'	**0.273**
8-10'	**0.39**

B-SSE-1 (4/18/12)	
Depth	Total PCBs
6-8'	<0.0379
8-10'	**0.0905**

B-E-3 (6/26/12)	
Depth	Total PCBs
6-8'	<0.0359
8-10'	<0.038
10-12'	<0.0376

B-E-2 (6/26/12)	
Depth	Total PCBs
6-8'	<0.0378
8-10'	**0.0502**
10-11.5'	17.4
11.5-12'	123

BF-6 (2/19/14)	
Depth	Total PCBs
2-4'	**0.32**
4-6'	**0.66**
6-8'	<0.11
8-10'	<0.11
10-12'	<0.12

B-E-1 (4/18/12)	
Depth	Total PCBs
6-8'	2.98
10-12'	29.5

B-NE-1 (4/18/12)	
Depth	Total PCBs
6-8'	**0.215**
8-10'	**0.0402**
10-12'	**0.046**

LEGEND:

- AD — ACID DRAIN LINE
- D — DRAIN LINE (ESTIMATED)
- E — DRAIN/UTILITY TRENCH VIA DOWSE
- T — TELEPHONE LINE
- G — GAS LINE
- UNKNOWN UTILITY TRENCH VIA DOWSE
- UNDERDRAIN
- GROUNDWATER MONITORING WELL
- SOIL BORING
- SOIL BORING WITH EXCEEDANCE
- SOIL BORING/TEMPORARY GROUNDWATER MONITORING WELL
- SOIL BORING/TEMPORARY GROUNDWATER MONITORING WELL WITH EXCEEDANCE
- ATTEMPTED SOIL BORING LOCATION ABANDONED DUE TO REFUSAL OR UTILITY OBSTRUCTION
- INTERIOR WALL
- COLUMN
- OVERHEAD AIR DUCTS
- OVERHEAD PIPE RUNS
- BOILER TANKS (APPROXIMATE LOCATION)
- PIT TREATMENT SYSTEM COMPONENTS
- NO DRILL AREAS (FUNCTION AS NOTED)
- NO DRILL AREAS DUE TO SUBSURFACE UTILITIES/OBSTRUCTIONS

Sample (4/22/14)	
Depth	Total PCBs
2-4'	<0.0378
4-6'	**0.0502**
6-8'	17.4
8-10'	123

SOIL BORING IDENTIFICATION (SAMPLE DATE)
SOIL SAMPLE DEPTH (FEET) TOTAL POLYCHLORINATED BIPHENYL (PCB) CONCENTRATION (MILLIGRAMS PER KILOGRAM [MG/KG])
< INDICATES NO PCB CONCENTRATIONS DETECTED ABOVE SPECIFIED QUANTITATION LIMIT
BOLD = PCB CONCENTRATION DETECTED
BOLD AND MAGENTA = PCB CONCENTRATION DETECTED ABOVE 1 MG/KG MCP S-1/TSCA STANDARD
BOLD, MAGENTA & BOX HIGHLIGHT = PCB CONCENTRATION DETECTED ABOVE 100 MG/KG MCP UPPER CONCENTRATION LIMIT
WHERE DUPLICATE RESULTS ARE AVAILABLE, THE HIGHER RESULTS ARE CITED ON THE FIGURE.

NOTES:

1. DRAWING REFERENCES "BLOCK B&C FIRST LEVEL PLAN" FROM OWEN F. HACKETT, JR. ASSOCIATES, OF NEW BEDFORD, MA DATED 10–15–69 AND "BLOCK B FIRST LEVEL PLAN" FROM JOSEPH P. CUDDIGAN OF EAST PROVIDENCE, RI DATED 7–12–72.
2. ALL UTILITY LOCATIONS ARE APPROXIMATE.

APPROXIMATE GRAPHIC SCALE
0' 5' 10'

NEW BEDFORD HIGH SCHOOL
NEW BEDFORD, MASSACHUSETTS

MECHANICAL ROOM
SOIL PCB RESULTS SUMMARY MAP

TRC
Wannalancit Mills
650 Suffolk Street
Lowell, MA 01854
(978) 970-5600

FIGURE 3

DRAWN BY: HWB
CHECKED BY: MAO
DATE: AUG 2014

FILE: T:\E_CAD\115058\FOOD STORAGE RM\NBHS MECH RM SOIL PCB RESULTS 2014-08-07.dwg
THIS STORAGE DRAWING REFERENCES BUT IS NOT LINKED TO T:\E_CAD\115058\FOOD STORAGE RM\PCB DATA BOXES 2-2014.xlsx & PCB DATA BOXES 4-29-14.xlsx & PCB DATA BOXES 7-2014.xlsx

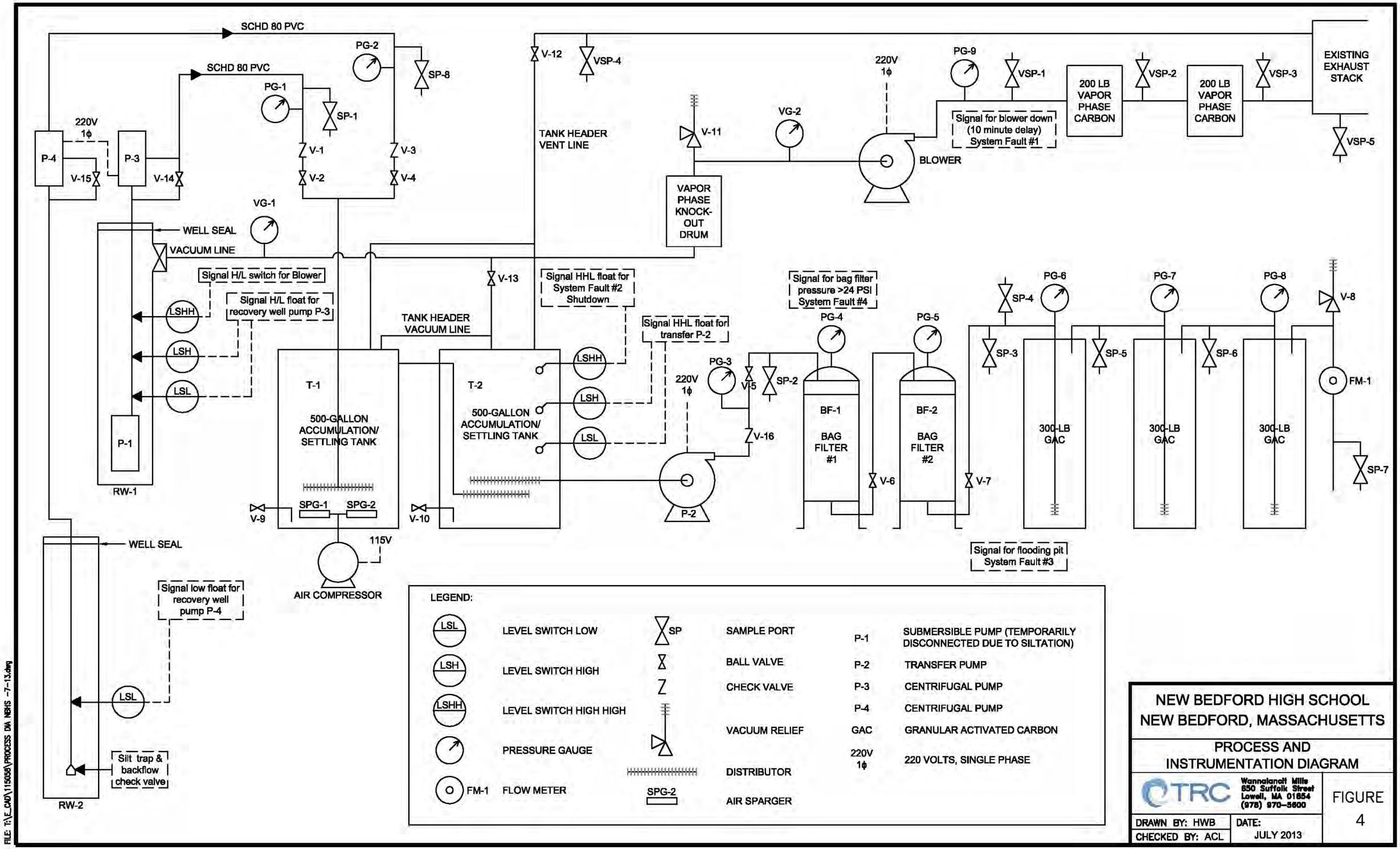
SCHD 80 PVC
SCHD 80 PVC
PG-2
SP-8
PG-1
SP-1
V-1
V-2
V-3
V-4
220V
1ϕ
P-4
P-3
V-15
V-14
VG-1
WELL SEAL
VACUUM LINE
Signal H/L switch for Blower
Signal H/L float for recovery well pump P-3
LSHH
LSH
LSL
P-1
RW-1
WELL SEAL
Signal low float for recovery well pump P-4
LSL
Silt trap & backflow check valve
RW-2
V-13
TANK HEADER VACUUM LINE
T-1
500-GALLON ACCUMULATION/ SETTLING TANK
T-2
500-GALLON ACCUMULATION/ SETTLING TANK
SPG-1
SPG-2
V-9
V-10
115V
AIR COMPRESSOR
V-12
VSP-4
TANK HEADER VENT LINE
Signal HHL float for System Fault #2 Shutdown
Signal HHL float for transfer P-2
LSHH
LSH
LSL
PG-3
V-5
SP-2
V-16
P-2
V-11
VAPOR PHASE KNOCK-OUT DRUM
VG-2
220V
1ϕ
BLOWER
PG-9
VSP-1
Signal for blower down (10 minute delay) System Fault #1
200 LB VAPOR PHASE CARBON
VSP-2
200 LB VAPOR PHASE CARBON
VSP-3
EXISTING EXHAUST STACK
VSP-5
Signal for bag filter pressure >24 PSI System Fault #4
PG-4
PG-5
BF-1
BAG FILTER #1
BF-2
BAG FILTER #2
V-6
V-7
SP-4
SP-3
SP-5
SP-6
PG-6
PG-7
PG-8
300-LB GAC
300-LB GAC
300-LB GAC
V-8
FM-1
SP-7
Signal for flooding pit System Fault #3
LEGEND:
LSL LEVEL SWITCH LOW
LSH LEVEL SWITCH HIGH
LSHH LEVEL SWITCH HIGH HIGH
PRESSURE GAUGE
FM-1 FLOW METER
SP SAMPLE PORT
BALL VALVE
CHECK VALVE
VACUUM RELIEF
DISTRIBUTOR
SPG-2 AIR SPARGER
P-1 SUBMERSIBLE PUMP (TEMPORARILY DISCONNECTED DUE TO SILTATION)
P-2 TRANSFER PUMP
P-3 CENTRIFUGAL PUMP
P-4 CENTRIFUGAL PUMP
GAC GRANULAR ACTIVATED CARBON
220V 1ϕ 220 VOLTS, SINGLE PHASE
NEW BEDFORD HIGH SCHOOL
NEW BEDFORD, MASSACHUSETTS
PROCESS AND INSTRUMENTATION DIAGRAM
TRC
Wannalancit Mills
650 Suffolk Street
Lowell, MA 01854
(978) 970-5600
DRAWN BY: HWB
CHECKED BY: ACL
DATE: JULY 2013
FIGURE 4
FILE: T:_CAD\115058\PROCESS DIA NBHS -7-13.dwg

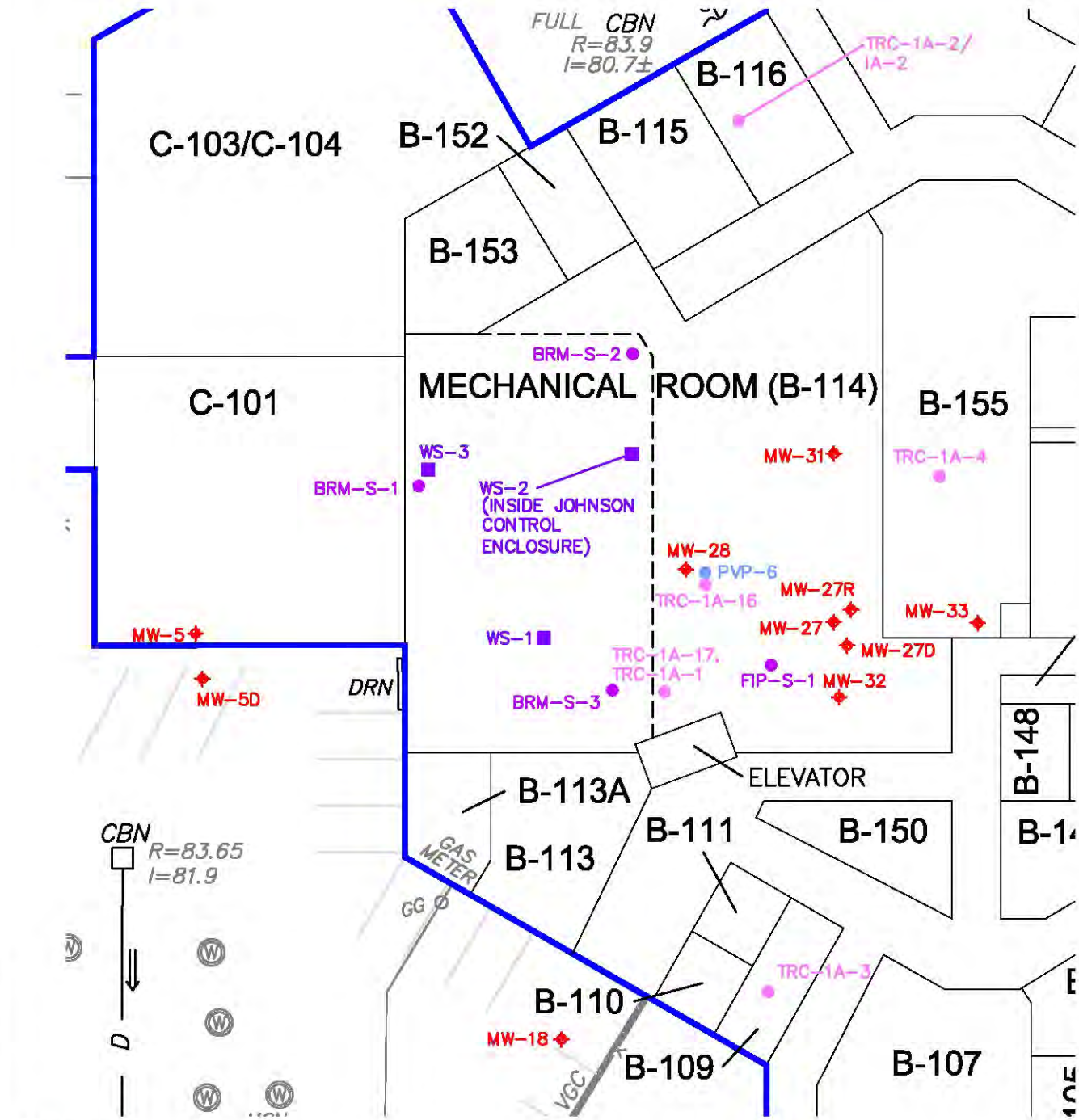

LEGEND:

MW-19	MONITORING WELL LOCATION
BRM-S-1	GROUNDWATER SEEP SAMPLE LOCATION
TRC-1A-4	INDOOR AIR SAMPLE LOCATION
PVP-3	PERMANENT SOIL GAS SAMPLE LOCATION
WS-1	WIPE SAMPLE LOCATION
	BUILDING

APPROXIMATE GRAPHIC SCALE

0' 30' 60'

NEW BEDFORD HIGH SCHOOL
NEW BEDFORD, MASSACHUSETTS

INDOOR AIR, SOIL GAS, AND WIPE SAMPLE LOCATIONS IN VICINITY OF MECHANICAL ROOM

TRC
Wannalancit Mills
650 Suffolk Street
Lowell, MA 01854
(978) 970-5600

FIGURE 5

DRAWN BY: HWB
CHECKED BY: ACL
DATE: APRIL 2015

FILE: T:\E_CAD\115056\NBHS SURVEY - SAMPS - AIR-SOIL GAS-WIPE 11-21-14.dwg

APPENDIX A

COPY OF DISCHARGE PERMIT # S-123

CITY OF NEW BEDFORD
Jonathan F. Mitchell, Mayor

Department of Public Infrastructure

Ronald H. Labelle
Commissioner

Water
Wastewater
Highways
Engineering
Cemeteries

March 2, 2015

Mr. David Sullivan
Wannalancit Mills
650 Suffolk St.
Lowell, MA 01854

Re: Industrial Discharge Permit # S - 123

Dear Mr. Sullivan,

Enclosed please find Industrial Discharge permit number S- 123

It is strongly suggested that you read through your permit to familiarize yourself with applicable City discharge regulations especially self-monitoring requirements.

In accordance with Federal Regulations and City protocol, a permit processing fee of two hundred fifty dollars ($250.00) is required. A bill will be sent to your office in this amount.

Should you have any questions please contact our office at 508-979-1556.

Sincerely,

Ronald H. Labelle
Commissioner
Department of Public Infrastructure

Enclosures

PERMIT #S - 123

In accordance with the provisions of the City of New Bedford Code of Ordinances, Chapter 16 Article II

FACILITY NAME: **TRC AT NEW BEDFORD HIGH SCHOOL**

MAILING ADDRESS: **WANNALANCIT MILLS**
650 SUFFOLK ST.
LOWELL, MA 01854

PREMISE ADDRESS: **230 HATHAWAY BLVD.**
NEW BEDFORD, MA 02740

CONTACT PERSON(S): **DAVID SULLIVAN**

PHONE NO: **978.970.5600**

is hereby authorized to discharge industrial wastewater from the above identified facility into the City of New Bedford Sewer System in agreement with the conditions set forth in this permit. Compliance with this permit does not relieve the permittee of its' obligation to comply with any or all applicable pretreatment regulations, standards or requirements under local, state, and federal laws, including any such regulations, standards, requirements or laws that may become effective during the term of this permit.

Non-compliance with any term or condition of this permit shall constitute a violation of the City of New Bedford's Sewer Use Ordinance. All issues of non-compliance will be handled as written in the City's Enforcement Response Procedures Document. **This permit is a three year permit and is effective on APRIL 1, 2015 and expires midnight on APRIL1, 2018.**

If the permittee desires to continue to discharge after the expiration or revocation of this permit, an application must be filed for a renewal permit in accordance with the regulations of the Sewer Use Ordinance, a minimum of 60 days prior to the expiration date.

CITY OF NEW BEDFORD
DEPARTMENT OF PUBLIC INFRASTRUCTURE
INDUSTRIAL DISCHARGE PERMIT

TABLE OF CONTENTS

Article	Title	Page
Article I	Definitions	4
Article II	General Conditions	4
Article III	Special Conditions	9
Article IV	Reporting & Monitoring	10
Article V	Monitoring Requirements	12

CITY OF NEW BEDFORD
DEPARTMENT OF PUBLIC INFRASTRUCTURE
INDUSTRIAL DISCHARGE PERMIT

ARTICLE I **DEFINITIONS**

Unless the context clearly indicates otherwise, the meaning of terms or abbreviations used in this discharge permit shall be as defined in the City's Sewer Use Ordinance (Chapter 16, Article II).

ARTICLE II **GENERAL CONDITIONS/PROHIBITIONS**

a. All discharges authorized herein shall be consistent with the City of New Bedford's Sewer Use Ordinance, and with the terms and conditions of this permit. If there is a conflict between the ordinance and this permit, then the terms of this permit shall govern. The discharge of any pollutant more frequently than, or at a level in excess of, that identified and authorized by this permit shall constitute a violation of the terms and conditions of this permit. Such a violation may result in the imposition of penalties equaling, $1000 per violation per day up to a maximum of $5000 per violation per day, as provided for in the City of New Bedford's Sewer Use Ordinance. Modifications, additions, and/or expansions that increase or decrease the quality and/or quantity of wastewater discharged to the Facilities must be reported to the Commissioner of the Department of Public Infrastructure (in this text, defined as, this person or his/her duly authorized agent(s)), City of New Bedford, in writing, and this permit may then be modified or reissued to reflect such changes. No change in the permittee's discharge may be made unless reported to and approved by the Commissioner. In no case shall new connections, increased flows, or significant changes in effluent quantity and/or quality be permitted if such will cause violation of the effluent limitation specified herein, unless permitted by the Commissioner.

Neither this permit nor any or all of the allowable discharge of flows and pollutant loadings provided for by the permit are transferable or assignable in part or whole to any other company, facility or process without the written consent of the Commissioner of Public Infrastructure.

b. After notice and opportunity for a hearing as provided for by the City of New Bedford's Sewer Use Ordinance, this permit may be modified, suspended, or revoked in whole or in part during its term for causes including the following:

1. Violation of any term or condition of this permit;
2. Obtaining a permit by misrepresentation or failure to disclose fully all relevant facts;
3. A change in conditions or the existence of a condition which requires either a temporary or permanent reduction or elimination of the authorized discharge;
4. Promulgation of a more stringent pretreatment standard by State or Federal agencies having jurisdiction over receiving waters. Permits modified under this section may include implementation schedules, self-monitoring requirements, revised effluent limitations and other provisions necessary to assure compliance;
5. A change in the facility's process or wastestream characteristics; or
6. A change in the Code of Ordinances, City of New Bedford, Chapter 16, Article II.

c. The permittee shall allow the Commissioner of the Department of Public Infrastructure and/or other duly authorized personnel upon the presentation of proper credentials:

1. To enter upon permittee's premises where an effluent source is located or in which any records are required to be kept under the terms and conditions of this permit during business hours;
2. To have access to and copy any records required to be kept under the terms and conditions of this permit;
3. To inspect any monitoring equipment or monitoring method required in this permit;
4. To sample at any intake, wastewater facility, or outfall; or
5. To enter upon a permittee's premise where an effluent source is located, during business and non-business hours, when a condition of emergency exists or is suspected to exist due to a process upset or discharge which may cause harm to the City's waste-water treatment facilities or process, or to the health or welfare of the community.

d. All pretreatment facilities shall be operated in a manner consistent with the Sewer Use Ordinance and applicable Federal, State or local regulations and guidelines. The permittee shall at all times maintain in good working order and operate as efficiently as possible all facilities or systems of control installed or utilized to achieve compliance with the terms and conditions of this permit.

e. The provisions of this permit are severable, and the invalidity of any condition or subdivision thereof shall not make void any other condition or subdivision thereof.

f. Non-Compliance and or Slug Discharges. In the event the permittee is unable to comply with any of the conditions of this permit due to an emergency situation resulting from a breakdown of pretreatment facilities, process upset condition, or occurrence of a spill, the permittee shall take the following steps:

1. Regardless of the scope or threat posed by the situation, if the Emergency occurs during the time period from 6:00 a.m. to 9:00 p.m., the permittee shall immediately notify the ranking employee on duty at the City's Wastewater Treatment Plant (508-991-6164), and the Wastewater Division Office (508 979-1556).
2. If the emergency is MAJOR in scope or if it poses IMMINENT threat or harm to the City's Wastewater Facilities and/or appurtenances, the environment, or the health and welfare of the community, the permittee shall immediately notify the above regard-less of the time of occurrence.
3. If the emergency is MINOR in scope AND poses no threat or harm AND occurs during the time period from 9:00 p.m. to 6:00 a.m., the permittee shall immediately notify the wastewater treatment plant. He shall then notify the Wastewater Division as soon as practicable after the start of the City's regular business hours. In addition, the permittee shall provide the Commissioner of the Department of Public Infrastructure with the following information in writing within five (5) days after commencement of such occurrence:

i Description of the discharge and the cause of non-compliance;

ii Anticipated time the condition of non-compliance is expected to continue, or if such conditions have been corrected, the duration of the period of non-compliance;

iii Steps taken by the permittee to reduce and eliminate the non-complying discharge; and

iv Steps to be taken by the permittee to prevent reoccurrence of the condition of non-compliance.

g. Revisions - The Commissioner of the Department of Public Infrastructure reserves the right to make appropriate revisions to this permit to establish effluent limitations, schedule of compliance, or other provisions which may be authorized under Federal, State or City acts to bring all such discharges into compliance with these acts.

h. The permittee shall not discharge wastewater containing any of the following substances:

1. Fats, wax, grease or oils of petroleum origin, whether emulsified or not, in excess of one hundred (100) mg/l or containing substances which may solidify or become viscous at temperatures between 32 degrees F (0 degrees C) and 140 degrees F (60 degrees C);

2. Any liquids, solids, or gases which by reason of their nature or quantity are, or may be, sufficient either alone or by interaction with other substances to cause fire or explosion or be injurious in any other way to the sewer system or to the operation of the sewer system. Prohibited materials include, but are not limited to: gasoline, kerosene, benzene, naphtha, toluene, xylene, ethers, alcohols, ketones, aldehydes, peroxides, chlorates, perchlorates, bromates, carbides, hydrides, sulfides, fuel oil or other flammable or explosive liquids, solids or gases.

3. Any effluent having a temperature higher than 104 degrees F (40 degrees C);

4. Any ashes, hair, cinders, sand, mud, straw, shavings, metal, glass, rags, feathers, tar, plastics, wood, paunch, manure, fish gurry, or any other solids not capable of passing through ½" mesh or solid or viscous substances capable of causing obstructions or other interferences with proper operation of the sewer system;

5. Any pollutant, including oxygen demanding pollutants (i.e. BOD) at flow rate and /or concentration which will cause the pollutant to pass through to the receiving waters or interfere with the City of New Bedford's treatment works.

6. Any waste having a pH lower than 5.5 or higher than 11.0, or having any other corrosive property capable of causing damage or hazards to structures, equipment, or personnel of the sewer system.

7. Any toxic or poisonous substance in sufficient quantity to injure or interfere with any wastewater treatment process or to constitute hazards to humans or animals or

to create any hazard in waters which receive treated effluent from the sewer treatment plant.

8. Any substance which may effect the City's wastewater treatment facility's effluent and cause violation of the NPDES permit requirements or the receiving waters' quality standards.

9. Any substance which would cause the City's wastewater treatment facility to be in noncompliance with sludge use, recycle or disposal criteria pursuant to guidelines or regulations developed under Section 405 of the Federal Act, the Clean Air Act, the Resource Conservation and Recovery Act Subtitle C, the Toxic Substance Control Act, the Marine Protection Research Sanctuary Act, the Safe Drinking Water Act Subtitle C, or other State Law or Regulation for sludge management or disposal.

ARTICLE III

SPECIAL CONDITIONS/PROHIBITIONS

Upon connection to the City's Wastewater Facilities, the permittee is authorized to discharge wastewater whose effluent characteristics shall not exceed the values listed in the City's Sewer Use Ordinance, or as further specified herein:

TABLE I

ALLOWABLE EFFLUENT LIMITATIONS

The permittee is authorized to discharge wastewater to the City's Facilities which are in conformance with prohibitions and limitations of the Sewer Use Ordinance of the City. Thereafter, such discharges shall comply with the prohibitions and limitations of the Sewer Use Ordinance and the following:

POLLUTANT	DAILY MAX*1	MONTHLY AVERAGE*1
CADMIUM	0.40 MG/L	0.40 MG/L
CHROMIUM	7.00 MG/L	7.00 MG/L
COPPER	2.30 MG/L	2.30 MG/L
LEAD	0.69 MG/L	0.69 MG/L
NICKEL	2.00 MG/L	2.00 MG/L
SILVER	1.20 MG/L	1.20 MG/L
ZINC	4.20 MG/L	4.20 MG/L
CYANIDE	1.90 MG/L	1.90 MG/L
TTO*2	----------	----------
OIL & GREASE	100.0 MG/L	100.0 MG/L
TSS*3	----------	----------
pH	5.5 – 11.0 S.U.	5.5 – 11.0 S.U.
BOD*3	----------	----------
PCBs	5 UG/L	----------

*

Note: (1) Values are currently under review, in accordance with EPA regulations, and are subject to change. The City will notify all permitted facilities of any revision(s).

(2) TTO is defined as Total Toxic Organics and consists of the following EPA analytical procedures:

Method 608 - Pesticides & PCB's
Method 624 - Volatile Organics
Method 625 - Semi-volatile Organics

(3) BOD and TSS surcharges will be as follows:

50 lbs - 150 lbs = $0.05/lb/day
151 lbs - 250 lbs = $0.07/lb/day
251 lbs and above = $0.10/lb/day

ARTICLE IV. **REPORTING AND MONITORING**

A. The permittee shall determine the wastewater flow using the main water meter to determine discharge flow. All monitoring devices and sampling stations must be approved by the Commissioner of Public Infrastructure. The permittee shall maintain records of all information resulting from any monitoring activities herein for a minimum of three (3) years. The permittee shall accept the reasonable estimates of quantities of wastewater flow as established by the Commissioner of Public Infrastructure during all periods in which the meters fail to measure the wastewater quantity correctly.

B. The permittee shall calibrate and perform maintenance procedures on all monitoring instruments and pretreatment equipment (if applicable) at regular intervals to ensure accuracy of measurements and reliability of equipment.

C. The permittee shall provide the above records and shall demonstrate the accuracy of the monitoring devices upon request of the Commissioner of Public Infrastructure.

D. The permittee shall analyze any samples as may be required by the monitoring schedule specified herein or by the Commissioner of Public Infrastructure to ensure effluent quality control.

E. If the permittee monitors any wastewater characteristics more frequently than is required by this permit, in accordance with approved methods (40 CFR Part 136), he/she must also forward the results of such monitoring.

F. The sampling, preservation, handling and analytical methods used must conform to methods specified in the "Code of Federal Regulations", 40 CFR Part 136.

G. All discharge limitations as provided for in Article III are conditional, and may be revised by the Commissioner of Public Infrastructure if the Commissioner determines that the limitations are not sufficient enough to protect the City's Wastewater Treatment and conveyance facilities and or that the limitations are not sufficient enough to prevent the introduction of pollutants to the City's facilities which may pass through the treatment works or may otherwise be incompatible with or prove detrimental to the operation and maintenance of said facilities. The permittee shall be responsible upon notification to reduce or eliminate as required and within the schedule established by the Commissioner of Public Infrastructure the discharge of the specified pollutant. The permittee shall be responsible for all costs incurred as a result of complying with these requirements.

H. In accordance with title 40 of the Code of Federal Regulations Part 403 Section 403.14, information and data provided by the permittee which identifies the nature and frequency of discharge shall be available to the public without restriction. Requests for confidential treatment or other information shall be governed by procedures specified in 40 CFR Part 2.

I. Self-Monitoring Requirements set forth under 40 CFR 403.12 and the following, shall be complied with by the permittee:

1. Samples are to be collected from the sample ports of the groundwater treatment system – located in the incinerator pit within the Mechanical Room.

2 . Quarterly *Self-Monitoring Reports are due to the City by the thirtieth day of the following month.* All reports required by this permit shall be submitted to:

Department of Public Infrastructure
1105 Shawmut Ave.
New Bedford, MA 02746
ATTN: IPP

3. Certification Statements verifying proper sampling techniques, chain of custody sheets, and a record of the flow (in gallons per day) during the monitoring period, **must accompany** each submitted self-monitoring report.

4. Should the results of the permittee's wastewater analysis indicate that a violation of this permit has occurred, the permittee must:

(a) Inform the City of New Bedford of the violation within 24 hrs; and

(b) Repeat the sampling and pollutant analysis and submit, in writing, the results of this second analysis within thirty days of the first violation. This sampling is in addition to and not in place of, self-monitoring requirements as written in this permit.

ARTICLE V. **MONITORING REQUIREMENTS**

From the period beginning on the effective date of this permit, the permittee shall monitor its' discharge from the location listed below and in Article IV(I(1)) of this document for the following parameters, at the indicated frequency

.

Table II
MONITORING REQUIREMENTS

PROCESS DESCRIPTION: CONTAMINATED GROUNDWATER REMEDIATION

SAMPLING DISCHARGE LOCATION: THE DISCHARGE LOCATION IN THE PIT

CATEGORIZATION: NON-CATEGORICAL INDUSTRIAL USER

PARAMETER (units)	MONITORING FREQUENCY/ SAMPLE TYPE	
BOD	once per quarter	composite[1]
TSS	once per quarter	composite[1]
Oil & Grease	once per quarter	grab[2]
pH	once per quarter	grab[2]
PCB	once per quarter	composite[1]
Volatile Organics (EPA 624)	once per quarter	composite[1] and/or grab[2]

Note:

(1) Composite samples may be either flow or time proportioned. Flow proportioned samples are to be based on hourly discharge rates while time proportioned samples are to be collected using equal aliquots from each time interval. In either case, at the minimum, a sample from every 6 hours of operation must be collected for representation.

***SPECIAL NOTE*: THE ABOVE EXCEPTION TO NORMAL COLLECTION PROCEDURES HAS BEEN APPROVED BY MR. JUSTIN PIMPARE OF THE EPA DUE TO LOW FLOW AMOUNTS.**

(2) Grab samples are individual samples collected over a period of time not to exceed 15 minutes.

APPENDIX B

HYDRAULIC CONTROL SYSTEM OPERATION, MAINTENANCE & MONITORING LOGS

Date: 5/14/15
Initials: JF

Treatment System Operation & Maintenance

New Bedford High School - Release Tracking Number 4-22409
230 Hathaway Boulevard, New Bedford, Massachusetts

System Run Time	26,291.9 (hours)	Date	5/14/2015	Time	6:30:00 AM
Startup since 3/19/12 @ 15:00				Technician	J. Fiero

Discharge Pressure (PG - 9)	10 (in. of water)	Flow Meter (FM-1)	1,816,296	Gal.	
			1,461,690	Gal.treated since startup	
			0.93	~average GPM	

	AQUEOUS	Valve Position (% open)	Pressure PSI	After Filter CO
Influent Line	PG-1	15%	0-20	0-20
Influent Line	PG-2	20%	0-35	0-35
Pre bag filter	PG-3	50%	32	31
Bag Filter 1	PG-4	100%	8	7
Bag Filter 2	PG-5	100%	8	6.5
GAC Bed 1	PG-6		6	5
GAC Bed 2	PG-7		3.5	2.5
GAC Bed 3	PG-8		2.5	2
Influent Valves	V-2 / V-4	NA	NA	
Effluent Valve	V-5	NA	NA	
Effluent totalizer	FM-1	1,816,620	@ 1:30 pm	
		Turbidity NTU	Headspace PPMv	
Influent Tank 1	Combined	22.5	0.2	**Aq. Samp 1**
Pre-bag filter	SP-2	28	0.1	
Post bag filter	SP-3	22	0.2	
Pre Clay bed	SP-4	22	0.2	
Pre GAC Bed 1	SP-5	0.54	0.1	
Pre GAC Bed 2	SP-6	0.18	1.2	
Effluent	SP-7	0.13	0.6	**Aq. Samp 2**
Effluent Pumping Rate	Timed FM-1		5.2 gpm	5.4 gpm after bag filter change out

Temperature (T-1)	83	(°F) Ambient Air
	103	(°F) Vapor Inlet
	98	(°F) Vapor Outlet

	VAPOR/AIR	Vac. or Pressure (" of water)	Vapor Concentration (ppm v)
VS-1 Inlet	VSP-1	-	0
Intra GAC beds	VSP-2	-	0
VS-2 Outlet	VSP-3	-	0
Tank header	VSP-4	-0.03	0-0.1
Stack base	VSP-5	-0.025	0
Inlet VAC	VG-1	6"	
Blower VAC	VG-2	20"	
Discharge Pressure	PG-9	10"	

INFLUENT - aqueous

Well ID	Headspace	Turbidity
MW-27R	0.1	66.4
MW-42R	0.3	6.74

Check Air Filter:	No	Condition:	Ok - no filter element
Check Holding Tanks:	Yes	Condition:	Tank 1 - slight odor tank sparge system OK Tank 2 - V. slight odor
Check Fault Controls:	Yes	Condition:	OK

Note: Bag filter change out conducted.

Gallons during ramp up	885
Initial Totalizer reading	355,815
Current Totalizer Reading	1,816,620
Gallons treated to date	**1,461,690**

Aqueous Samples		**5/14/2015**
Samp 1 5/14 at 10:30	VOCs,PCBs	Influent (Tank 1)
Samp 2 5/14 at 11:00	VOCs, PCBs	Effluent (SP-7)

Date	Well	DTW (gs)	~TD	Vac.	Headspace
5/14/2015	MW-27R	7-7.5'	~10'	NR	0.1
5/14/2015	MW-42R	8.5-10'	~12'	NR	0.4
5/14/2015	MW-27D	2.15'	~17'	NA	0.0
5/14/2015	MW-33	2.08'	~9'	-0.001	0
5/14/2015	MW-32	2.15'	~9' (8.37')	-0.003	0.1
5/14/2015	MW-28	2.2'	16.84'	-0.025	0.2
5/14/2015	PVP-6	NA	NA	-0.062	NR
5/14/2015	MW-40	2.22'	~11.5'	NA	0.0
5/14/2015	MW-41	2.39'	~11.25'	-0.080	0.2
5/14/2015	MW-31	2.1'	9.06'	0.000	0.0

Vapor Samples 5/14/2015	
Samp 1 - Inlet 9:55-13:58	PCBs by TO-10A
Samp 2 - Outlet 9:56-14:00	PCBs by TO-10A
Sample 3 - Inlet 9:34-9:46	VOCs by TO-15
Sample 4 - Outlet 9:33-9:46	VOCs by TO-15

PCB puff media 243 &244 min@5L/m
VOCs 2.7L SUMMAs

5/14/2015	Time	Temp. C	Sp. Cond	DO	pH	ORP
INF\Tank 1	10:30:00 AM	21.72	370	6.15	7.2	-12.0
SP-2	10:40:00 AM	23.74	441	7.66	7.36	-20
SP-4	11:30:00 AM	23.82	438	6.98	7.33	-18
SP-6	11:50:00 AM	24.22	435	0.16	7.31	-9.5
SP-7	12:00:00 PM	24.43	438	0.03	7.29	-9.5

Date: 6/5/15
Initials: JP JF

Treatment System Operation & Maintenance

New Bedford High School - Release Tracking Number 4-22409

230 Hathaway Boulevard, New Bedford, Massachusetts

24 hr POTW event starting 6/4/2015 @ 7:30 AM

System Run Time	26,822.4	(hours)	Date	6/5/2015	Time 6:30:00 AM
Startup since 3/19/12 @ 15:00			Technician		J. Patinskas

Discharge Pressure (PG - 9)	10.25"	(in. of water)	Flow Meter (FM-1)	1,840,283	Gal. @ 11:30am 6/5/2015
			As of 3/17 @ ~7am	1,485,353	Gal.treated since startup
				0.92	~average GPM

	AQUEOUS	Valve Position (% open)	Pressure PSI	
Influent Line	PG-1	15%	0-10	
Influent Line	PG-2	20%	0-30	
Pre bag filter	PG-3	50%	32	
Bag Filter 1	PG-4	100%	9	
Bag Filter 2	PG-5	100%	6.5	
GAC Bed 1	PG-6		4.5	
GAC Bed 2	PG-7		3	
GAC Bed 3	PG-8		2.5	
Influent Valves	V-2 / V-4	15% / 20%	see above	
Effluent Valve	V-5	30%	see above	
Effluent totalizer	FM-1	1,840,283	@ 11:30 AM	on 6/5/2015
		Turbidity NTU	Headspace PPMv	
Influent Tank 1	Combined	12.6	0.1-0.2	**Aq. Samp 1**
Pre-bag filter	SP-2	7.69	0.1	
Post bag filter	SP-3	0.92	0.2	
Pre Clay bed	SP-4	0.92	0.2	
Pre GAC Bed 1	SP-5	0.57	0.2-0.3	
Pre GAC Bed 2	SP-6	0.52	1.3	
Effluent	SP-7	0.22	0.6	**Aq. Samp 2**
Effluent Pumping Rate	Timed FM-1		5.0 gpm	

Temperature (T-1)	89	(°F) Ambient Air
	102	(°F) Vapor Inlet
	98	(°F) Vapor Outlet

	VAPOR/AIR	Vac. or Pressure (" of water)	Vapor Concentration (ppm v)
VS-1 Inlet	VSP-1	-	0
Intra GAC beds	VSP-2	-	0
VS-2 Outlet	VSP-3	-	0
Tank header	VSP-4	-0.03	0-0.1
Stack base	VSP-5	-0.02	0
Inlet VAC	VG-1	5.5"	
Blower VAC	VG-2	20"	
Discharge Pressure	PG-9	10.25"	

INFLUENT - aqueous

Well ID	Headspace	Turbidity
MW-27R	0.1-0.2	12.02
MW-42R	0.2-0.4	8.8

Check Air Filter:	No	Condition:	Ok - no filter element
Check Holding Tanks:	Yes	Condition:	Tank 1 - slight odor tank sparge system OK
			Tank 2 - V. slight odor
Check Fault Controls:	Yes	Condition:	OK

Note: Treatment system recovery wells & blower shutdown at 10:30 / System off at 11:30am

Gallons during ramp up	885
Initial Totalizer reading	355,815
Current Totalizer Reading	1,840,283
Gallons treated to date	**1,485,353**

Date	Well	DTW (gs)	~TD	Vac.	Headspace
6/4/2015	MW-27R	6->7' gs	~10'	NR	0.1-0.2
6/4/2015	MW-42R	8->10.0' gs	~12'	NR	0.2-0.3
6/4/2015	MW-27D	2.47'	~17'	N/A	0
6/4/2015	MW-33	2.36'	~9'	0	0
6/4/2015	MW-32	2.4'	~9' (8.37')	-0.003	0-0.1
6/4/2015	MW-28	2.54'	16.84'	-0.02	0.1-0.2
6/4/2015	PVP-6	N/A	N/A	-0.04	N/A
6/4/2015	MW-40	2.54'	~11.5'	N/A	0.0
6/4/2015	MW-41	2.74'	~11.25'	-0.05	0.2
6/4/2015	MW-31	2.2'	9.06'	0.0	0

Aqueous Samples	**6/4-6/5/2015**	
Samp 1 6/4 @ 10:00 AM	VOCs,PCBs	Influent (Tank 1)
Samp 2 6/4 @ 11:00AM	VOCs, PCBs	Effluent (SP-7)
Effluent 6/5 6:30 (grab)	+ 6/4 7:30, 13:30, 21:30 (Comp)	
* POTW Effluent (grab)	Oil & Grease / pH	
POTW Effluent (composite)	VOCs,PCBs, BOD & T.S.S.	

Note: Effluent composite 4-6hr VOC aliquots

Vapor Samples 6/4/15	
Samp 1 - Inlet 9:45-13:45 4hr	PCBs by TO-10A
Samp 2 - Outlet 9:50-13:50 am	PCBs by TO-10A
Sample 3 - Inlet 9:15-9:28	VOCs by TO-15
Sample 4 - Outlet 9:18-9:31	VOCs by TO-15

PCB puff media 240 min@5L/m

VOCs 2.7L SUMMAs ~215 ml/min

6/4/2015	Time	Temp. C	Sp. Cond	DO	pH	ORP
INF\Tank 1	11:00	22.86	388	6.7	6.73	36.2
SP-2	10:15	24.4	407	6.8	7.22	47.5
SP-4	10:20	24.5	408	7.41	7.44	37.8
SP-6	10:40	24.91	392	4.5	7.3	37.5
SP-7	10:50	24.91	395	0.72	7.15	-10

Date: 8/14/15
Initials: JF

Treatment System Operation & Maintenance

New Bedford High School - Release Tracking Number 4-22409
230 Hathaway Boulevard, New Bedford, Massachusetts

System Run Time	27,249.9 (hours)	Date	8/14/2015	Time	8:30:00 AM
Startup since 3/19/12 @ 15:00				Technician	J. Fiero

Discharge Pressure (PG - 9)	10 (in. of water)	Flow Meter (FM-1)	1,855,046	Gal.	
			1,500,458	Gal.treated since startup	
			0.92	~average GPM	

	AQUEOUS	Valve Position (% open)	Pressure PSI	After Filter CO
Influent Line	PG-1	15%	0-10	
Influent Line	PG-2	20%	0-12	
Pre bag filter	PG-3	50%	32	32
Bag Filter 1	PG-4	100%	14	12.5
Bag Filter 2	PG-5	100%	10	11.5
GAC Bed 1	PG-6		8	10
GAC Bed 2	PG-7		5	7
GAC Bed 3	PG-8		5	5
Influent Valves	V-2 / V-4	NA	NA	
Effluent Valve	V-5	NA	NA	
Effluent totalizer	FM-1	1,855,388	@ 1:00 pm	
		Turbidity NTU	Headspace PPMv	
Influent Tank 1	Combined	8.94	0.2	**Aq. Samp 1**
Pre-bag filter	SP-2	13.2	0.1	
Post bag filter	SP-3	2.17	0.1-0.2	
Pre Clay bed	SP-4	2.17	0.1-0.2	
Pre GAC Bed 1	SP-5	0.5	0.2	
Pre GAC Bed 2	SP-6	0.44	0.9	
Effluent	SP-7	0.31	0.5	**Aq. Samp 2**
Effluent Pumping Rate	Timed FM-1		6 gpm	6.2 gpm after bag filter change out

Temperature (T-1)	83	(°F) Ambient Air
	102	(°F) Vapor Inlet
	99	(°F) Vapor Outlet

	VAPOR/AIR	Vac. or Pressure (" of water)	Vapor Concentration (ppm v)
VS-1 Inlet	VSP-1	-	0
Intra GAC beds	VSP-2	-	0
VS-2 Outlet	VSP-3	-	0
Tank header	VSP-4	-0.01	0
Stack base	VSP-5	-0.02	0
Inlet VAC	VG-1	5.5"	
Blower VAC	VG-2	19.6"	
Discharge Pressure	PG-9	10"	

INFLUENT - aqueous

Well ID	Headspace	Turbidity
MW-27R	0.2	13.5
MW-42R	0.3	14.2

Check Air Filter:	No	Condition:	Ok - no filter element
Check Holding Tanks:	Yes	Condition:	Tank 1 - slight odor tank sparge system OK Tank 2 - V. slight odor
Check Fault Controls:	Yes	Condition:	MW-42R on standby upon arrival - well reactivated

Note: Bag filter change out conducted.

Gallons during ramp up	885
Initial Totalizer reading	355,815
Current Totalizer Reading	1,855,388
Gallons treated to date	**1,500,458**

Aqueous Samples		**8/14/2015**
Samp 1 8/14 at 10:00	VOCs,PCBs	Influent (Tank 1)
Samp 2 8/14 at 11:30	VOCs, PCBs	Effluent (SP-7)

Vapor Samples 8/14/2015	
Samp 1 - Inlet 9:05-13:05	PCBs by TO-10A
Samp 2 - Outlet 9:10-13:10	PCBs by TO-10A
Sample 3 - Inlet 8:40-8:54	VOCs by TO-15
Sample 4 - Outlet 8:45-8:57	VOCs by TO-15

PCB puff media 240 min@5L/m
VOCs 2.7L SUMMAs

Date	Well	DTW (gs)	~TD	Vac.	Headspace
8/14/2015	MW-27R	7.3-7.8'	~10'	NR	0.2
8/14/2015	MW-42R	10.3-10.6'	~12'	NR	0.3
8/14/2015	MW-27D	3.18'	~17'	NA	0.0
8/14/2015	MW-33	3.19'	~9'	0	0
8/14/2015	MW-32	3.32'	~9' (8.37')	-0.002	0-0.1
8/14/2015	MW-28	3.18'	16.84'	-0.008	0.1
8/14/2015	PVP-6	NA	NA	-0.028	NR
8/14/2015	MW-40	3.24'	~11.5'	NA	0.0
8/14/2015	MW-41	3.42'	~11.25'	-0.320	0.3
8/14/2015	MW-31	3.24'	9.06'	0.000	0.0

8/14/2015	Time	Temp. C	Sp. Cond	DO	pH	ORP
INF\Tank 1	9:50:00 AM	24.58	338	4.19	7.01	105.0
SP-2	10:30:00 AM	26.2	365	5.71	7.66	111
SP-4	10:40:00 AM	26.24	365	5.92	7.9	126
SP-6	10:58:00 AM	26.42	353	0.93	7.34	140.0
SP-7	11:10:00 AM	26.53	355	0.7	7.32	142

Date: 9/15/15
Initials: JP JF

Treatment System Operation & Maintenance

New Bedford High School - Release Tracking Number 4-22409
230 Hathaway Boulevard, New Bedford, Massachusetts

24 hr POTW event starting 9/14/2015 @ 7:05 AM

System Run Time	28,015.4 (hours)	Date	9/15/2015	Time	6:30:00 AM
Startup since 3/19/12 @ 15:00				Technician	J. Patinskas

Discharge Pressure (PG - 9)	10" (in. of water)	Flow Meter (FM-1)	1,870,877	Gal. @ 12:30pm 9/15/2015
			1,515,947	Gal.treated since startup
			0.90	~average GPM

	AQUEOUS	Valve Position (% open)	Pressure PSI	After Filter CO
Influent Line	PG-1	15%	0-10	
Influent Line	PG-2	20%	0-10	
Pre bag filter	PG-3	50%	41	40
Bag Filter 1	PG-4	100%	13	11
Bag Filter 2	PG-5	100%	11	10
GAC Bed 1	PG-6		9	8
GAC Bed 2	PG-7		6	6.5
GAC Bed 3	PG-8		5	5
Influent Valves	V-2 / V-4	15% / 20%	see above	
Effluent Valve	V-5	30%	see above	
Effluent totalizer	FM-1	1,840,283	@ 12:30 PM	on 9/15/2015
		Turbidity NTU	Headspace PPMv	
Influent Tank 1	Combined	12.3	0.0-0.1	**Aq. Samp 1**
Pre-bag filter	SP-2	12.5	0.1	
Post bag filter	SP-3	3.09	0-0.1	
Pre Clay bed	SP-4	0.92	0.2	
Pre GAC Bed 1	SP-5	0.76	0.3	
Pre GAC Bed 2	SP-6	0.29	1.1	
Effluent	SP-7	0.19	0.5	**Aq. Samp 2**
Effluent Pumping Rate	Timed FM-1		6 gpm	5.5 gpm after bag filter change out

Temperature (T-1)	89	(°F) Ambient Air
	105	(°F) Vapor Inlet
	100	(°F) Vapor Outlet

	VAPOR/AIR	Vac. or Pressure (" of water)	Vapor Concentration (ppm v)
VS-1 Inlet	VSP-1	-	0
Intra GAC beds	VSP-2	-	0
VS-2 Outlet	VSP-3	-	0
Tank header	VSP-4	-0.03	0-0.1
Stack base	VSP-5	-0.06	0
Inlet VAC	VG-1	5.5"	
Blower VAC	VG-2	20"	
Discharge Pressure	PG-9	10"	

INFLUENT - aqueous

Well ID	Headspace	Turbidity
MW-27R	0.1	20.8
MW-42R	0.1-02	6.2

Check Air Filter:	No	Condition:	Ok - no filter element
Check Holding Tanks:	Yes	Condition:	Tank 1 - clear v. slight odor tank sparge system OK
			Tank 2 - slight bio-film no odor
Check Fault Controls:	Yes	Condition:	MW-42R on standby upon arrival - well reactivated

Note: 2-hour shutdown 9:30-11:30 for carbon backflush, float control cleaning and bag filter change out

Gallons during ramp up	885
Initial Totalizer reading	355,815
Current Totalizer Reading	1,870,877
Gallons treated to date	**1,515,947**

Aqueous Samples	**9/14-9/15/2015**	
Samp 1 9/14 @ 10:30 AM	VOCs,PCBs	Influent (Tank 1)
Samp 2 9/14 @ 11:00AM	VOCs, PCBs	Effluent (SP-7)
Effluent 9/15 6:30 (grab)	+ 9/14 7:05, 16:30, 22:30 (Comp)	
* POTW Effluent (grab)	Oil & Grease / pH	
POTW Effluent (composite)	VOCs,PCBs, BOD & T.S.S.	

Note: Effluent composite 4-6hr VOC aliquots

Vapor Samples 9/14/15	
Samp 1 - Inlet 14:07-22:29	PCBs by TO-10A
Samp 2 - Outlet 14:13-22:33	PCBs by TO-10A
Sample 3 - Inlet 13:46-13:58	VOCs by TO-15
Sample 4 - Outlet 13:48-14:00	VOCs by TO-15

PCB puff media 502 & 500 min@5L/m
VOCs 2.7L SUMMAs ~215 ml/min

Date	Well	DTW (gs)	~TD	Vac.	Headspace
9/14/2015	MW-27R	6.5->7' gs	~10'	>-0.65	0.1
9/14/2015	MW-42R	10->11.25' gs	~12'	>-0.25	0.1-0.2
9/14/2015	MW-27D	3.14'	~17'	N/A	0
9/14/2015	MW-33	3.26'	~9'	-0.015	0
9/14/2015	MW-32	3.42'	~9' (8.37')	-0.225	0.0
9/14/2015	MW-28	3.14'	16.84'	-0.023	0-0.1
9/14/2015	PVP-6	N/A	N/A	-0.04	N/A
9/14/2015	MW-40	No access	~11.5'	No access	0.0
9/14/2015	MW-41	3.45'	~11.25'	-0.125	0.1-0.2
9/14/2015	MW-31	3.29	9.06'	0.0	0

9/14/2015	Time	Temp. C	Sp. Cond	DO	pH	ORP
INF\Tank 1	10:20	25.82	350	3.58	6.82	132
SP-2	10:40	27	356	0.99	7.25	158
SP-4	10:45	27.13	356	1.28	7.53	159.5
SP-6	10:55	27.52	357	0.2	7.41	164.8
SP-7	11:05	27.65	356	0.19	7.15	163

Date: 10/13/15
Initials: JF

Treatment System Operation & Maintenance

New Bedford High School - Release Tracking Number 4-22409
230 Hathaway Boulevard, New Bedford, Massachusetts

System Run Time	28,682.4 (hours)	Date	10/13/2015	Time	8:30:00 AM
Startup since 3/19/12 @ 15:00				Technician	J. Fiero

Discharge Pressure (PG - 9)	10 (in. of water)	Flow Meter (FM-1)	1,901,348	Gal.
			1,546,649	Gal.treated since startup
			0.90	~average GPM

	AQUEOUS	Valve Position (% open)	Pressure PSI	After Filter CO
Influent Line	PG-1	15%	0-10	
Influent Line	PG-2	20%	0-10	
Pre bag filter	PG-3	50%	41	41
Bag Filter 1	PG-4	100%	16	9.5
Bag Filter 2	PG-5	100%	9	9
GAC Bed 1	PG-6		0	7
GAC Bed 2	PG-7		0	5
GAC Bed 3	PG-8		0	5
Influent Valves	V-2 / V-4	NA	NA	
Effluent Valve	V-5	NA	NA	
Effluent totalizer	FM-1	1,901,579	@ 1:00 pm	
		Turbidity NTU	Headspace PPMv	
Influent Tank 1	Combined	18.9	0.1	**Aq. Samp 1**
Pre-bag filter	SP-2	12.8	0.1	
Post bag filter	SP-3	0.68	0.1	
Pre Clay bed	SP-4	0.68	0.1	
Pre GAC Bed 1	SP-5	0.21	0.6	
Pre GAC Bed 2	SP-6	0.98	0.4	
Effluent	SP-7	0.16	0.3	**Aq. Samp 2**
Effluent Pumping Rate	Timed FM-1		2 gpm	6.3 gpm after bag filter change out

Temperature (T-1)	83	(°F) Ambient Air
	108	(°F) Vapor Inlet
	103	(°F) Vapor Outlet

	VAPOR/AIR	Vac. or Pressure (" of water)	Vapor Concentration (ppm v)
VS-1 Inlet	VSP-1	-	0
Intra GAC beds	VSP-2	-	0
VS-2 Outlet	VSP-3	-	0
Tank header	VSP-4	-0.03-0.04	0
Stack base	VSP-5	-0.028	0
Inlet VAC	VG-1	5.5"	
Blower VAC	VG-2	20"	
Discharge Pressure	PG-9	10"	

INFLUENT - aqueous

Well ID	Headspace	Turbidity
MW-27R	0.2	28.6
MW-42R	0.4	9.2

Check Air Filter:	No	Condition:	Ok - no filter element
Check Holding Tanks:	Yes	Condition:	Tank 1 - slight odor tank sparge system OK Tank 2 - V. slight odor
Check Fault Controls:	Yes	Condition:	OK

Note: Bag filter change out conducted.

Gallons during ramp up	885
Initial Totalizer reading	355,815
Current Totalizer Reading	1,901,579
Gallons treated to date	**1,546,649**

Aqueous Samples		**10/13/2015**
Samp 1 10/13 at 9:45	VOCs,PCBs	Influent (Tank 1)
Samp 2 10/13 at 8:15	VOCs, PCBs	Effluent (SP-7)

Vapor Samples 10/13/2015	
Samp 1 - Inlet 8:07-12:17	PCBs by TO-10A
Samp 2 - Outlet 8:09-12:19	PCBs by TO-10A
Sample 3 - Inlet 7:45-7:57	VOCs by TO-15
Sample 4 - Outlet 7:48-8:00	VOCs by TO-15

PCB puff media 250 min@5L/m
VOCs 2.7L SUMMAs

Date	Well	DTW (gs)	~TD	Vac.	Headspace
10/13/2015	MW-27R	6.5-7.0'	~10'	NR	0.1-0.2
10/13/2015	MW-42R	10.25-11.25'	~12'	NR	0.3-0.4
10/13/2015	MW-27D	2.3'	~17'	NA	0.0
10/13/2015	MW-33	2.44'	~9'	-0.008	0.0
10/13/2015	MW-32	2.23'	~9' (8.37')	-0.053	0.0
10/13/2015	MW-28	2.34'	16.84'	-0.018	0.1
10/13/2015	PVP-6	NA	NA	-0.035	NR
10/13/2015	MW-40	Obstructed	~11.5'	NR	NR
10/13/2015	MW-41	2.55'	~11.25'	-0.150	0.2
10/13/2015	MW-31	2.42'	9.06'	0.000	0.0

10/13/2015	Time	Temp. C	Sp. Cond	DO	pH	ORP
INF\Tank 1	9:50:00 AM	25.88	362	5.5	6.8	149.0
SP-2	8:30:00 AM	26.4	368	2.59	7.36	222
SP-4	11:00:00 AM	26.58	366	5.2	7.39	172
SP-6	10:30:00 AM	26.9	371	0.98	7.15	110.0
SP-7	9:00:00 AM	27.02	374	0.8	7.29	210

GTS ENVIRONMENTAL TECHNOLOGY, INC.

9 Cheney Drive, Hudson, New Hampshire 03051 Telephone (603) 881-5378

June 26, 2015

To : Alfred Leonard
From : John Patinskas JP

Re : Site Inspection on 6/5/15
Wastewater Treatment System
New Bedford High School site
230 Hathaway Boulevard
New Bedford, Massachusetts

The purpose of this memo is to document inspection of the subject facility by a Certified Wastewater Treatment Facilities Operator as required by 310 CMR 40.0041(9). On June 5, 2015, the wastewater treatment system on a property located at 230 Hathaway Boulevard in New Bedford, Massachusetts was inspected by John P. Patinskas, Grade 2 Wastewater Facilities Operator (certification number 12286).

The groundwater recovery and treatment system was installed between January 27, 2012 and March 15, 2012. Continuous system operation began on 3/19/12. The original system included a recovery well installed through the floor of the school's mechanical equipment room. The groundwater recovery and treatment system was expanded to include a second recovery well on August 20, 2012. Groundwater pumped from the two wells accumulates in a series of two 500-gallon equalization tanks. Two tanks were provided to ensure maximum settling of solids and separation of any LNAPL and DNAPL recovered. Effluent from the accumulation tanks is pumped through a series of two No. 2 size bag filters. The lead filter has a 5-micron bag while the lag filter has a 1-micron bag. In the original system, effluent from the bag filters discharged to a 350-lb organoclay vessel followed by a series of two 300-lb activated carbon vessels. On June 19, 2013, the organoclay in the primary vessel was replaced with 300 pounds of activated carbon (currently three 300-lb activated carbon vessels in series). Treated effluent from the carbon vessels flows through a flow totalizer followed by discharge to the municipal treatment system. Groundwater recovery and treatment fault controls include high accumulation tank water level, high bag filter pressure and water detection on floor. An autodialer notifies system operators in the event of an alarm condition.

Premature bag filter fouling was observed in January 2013. Observed fouling appeared to be due to iron precipitation and bacterial growth. On January 3, 2013 an aeration system was installed in the primary equalization tank. The purpose of aeration is to 1) precipitate iron and 2) agglomerate suspended bacteria to promote rapid settling. Aeration resulted in improved particulate formation and settling in the second tank.

A vacuum extraction system recovers soil vapor from the original recovery well. Vapor recovery is facilitated using a Rotron Model EN454, 1.5-HP blower. The blower discharges soil

gas to a series of two 150-lb vapor-phase activated carbon vessels followed by discharge to the atmosphere through an existing exhaust stack.

Pre-mature bag filter clogging occurred during the June through September 2013 monitoring period, requiring frequent filter change-out as often as once per week. Conditions improved during subsequent inspection periods. Presently, filter bags last a month or more between change-outs.

Both recovery well pumps are actuated by in-well float switches. The float switches in both wells were replaced on 12/17/13 due to a tendency to stick in the up or down position. On 6/6/15, both float switches were again stuck in the up position. Although well pumps continue to run with floats stuck in the up position, operation in inefficient and can lead to premature pump failure. Frequent cleaning (perhaps monthly) is recommended to minimize future float problems.

The system was operating at the time of the June 6, 2015 GTS site visit. The flow totalizer read 1,840,283 gallons on June 6, 2015, indicating 138,514 gallons treated since the most recent GTS inspection on March 15, 2015. The average flow rate between 3/15/15 and 6/6/15 was calculated to be 1.16 GPM. This flow rate is significantly higher than the 0.72 GPM average flow reported for the quarter ending March 15, 2015.

Water samples were obtained at various treatment locations and screened for volatile organic compounds (VOCs) by photo-ionization detector (PID). VOCs were measured at 0.2 ppm at the raw water influent and 0.6 ppm at the treated effluent. Influent VOC concentrations show a significant decline since system start-up and have been below 2 ppm for the last six O&M events (i.e. March 2014 through June 2015). Laboratory samples were obtained for analysis of VOCs and PCBs.

The treatment system was shut down after taking system readings on June 6, 2015. It is my understanding that the system will remain shut down until July 24, 2015. We recommend that treated/untreated water samples be screened for VOCs at start-up to assess contaminant rebound. We also recommend removal and cleaning both well float switches and replacement of bag filters prior to system restart.

Should you have any questions regarding any aspect of this inspection report, please do not hesitate to call. The next operation and maintenance visit will be scheduled in September 2015.

GTS ENVIRONMENTAL TECHNOLOGY, INC.

9 Cheney Drive, Hudson, New Hampshire 03051 Telephone (603) 881-5378

October 2, 2015

To : Alfred Leonard
From : John Patinskas JP

Re : Site Inspection on 9/15/15
Wastewater Treatment System
New Bedford High School site
230 Hathaway Boulevard
New Bedford, Massachusetts

The purpose of this memo is to document inspection of the subject facility by a Certified Wastewater Treatment Facilities Operator as required by 310 CMR 40.0041(9). On September 15, 2015, the wastewater treatment system on a property located at 230 Hathaway Boulevard in New Bedford, Massachusetts was inspected by John P. Patinskas, Grade 2 Wastewater Facilities Operator (certification number 12286).

The groundwater recovery and treatment system was installed between January 27, 2012 and March 15, 2012. Continuous system operation began on 3/19/12. The original system included a recovery well installed through the floor of the school's mechanical equipment room. The groundwater recovery and treatment system was expanded to include a second recovery well on August 20, 2012. Groundwater pumped from the two wells accumulates in a series of two 500-gallon equalization tanks. Two tanks were provided to ensure maximum settling of solids and separation of any LNAPL and DNAPL recovered. Effluent from the accumulation tanks is pumped through a series of two No. 2 size bag filters. The lead filter has a 5-micron bag while the lag filter has a 1-micron bag. In the original system, effluent from the bag filters discharged to a 350-lb organoclay vessel followed by a series of two 300-lb activated carbon vessels. On June 19, 2013, the organoclay in the primary vessel was replaced with 300 pounds of activated carbon (currently three 300-lb activated carbon vessels in series). Treated effluent from the carbon vessels flows through a flow totalizer followed by discharge to the municipal treatment system. Groundwater recovery and treatment fault controls include high accumulation tank water level, high bag filter pressure and water detection on floor. An autodialer notifies system operators in the event of an alarm condition.

Premature bag filter fouling was observed in January 2013. Observed fouling appeared to be due to iron precipitation and bacterial growth. On January 3, 2013 an aeration system was installed in the primary equalization tank. The purpose of aeration is to 1) precipitate iron and 2) agglomerate suspended bacteria to promote rapid settling. Aeration resulted in improved particulate formation and settling in the second tank.

A vacuum extraction system recovers soil vapor from the original recovery well. Vapor recovery is facilitated using a Rotron Model EN454, 1.5-HP blower. The blower discharges soil

gas to a series of two 150-lb vapor-phase activated carbon vessels followed by discharge to the atmosphere through an existing exhaust stack.

Pre-mature bag filter clogging occurred during the June through September 2013 monitoring period, requiring frequent filter change-out as often as once per week. Conditions improved during subsequent inspection periods. Presently, filter bags last a month or more between change-outs.

Both recovery well pumps are actuated by in-well float switches. The float switches in both wells were replaced on 12/17/13 due to a tendency to stick in the up or down position. On 9/15/15, the float control on the MW-27R pump was cycling on the float control. The MW42R pump appeared to be off on the in-well float control. The MW-42R float switch was removed and cleaned, but failed to actuate the pump upon replacement. The float control electrical contacts were bypassed to allow operation of the MW-42R pump in continuous mode. We recommend replacing the float switch as soon as practicable.

The system was operating at the time of the September 15, 2015 GTS site visit. The flow totalizer read 1,870,947 gallons on September 15, 2015, indicating 30,664 gallons treated since the most recent GTS inspection on June 6, 2015. The system was turned off between June 6, 2015 and July 27, 2015 to assess rebound. The RW-42R pump was off for an undetermined time period due to a float malfunction. The average flow rate between 7/27/15 and 9/15/15 was calculated to be 0.43 GPM. This flow rate is significantly lower than the 1.16 GPM average flow reported for the quarter ending June 6, 2015. The relatively low average flow is likely due to a low groundwater table associated with relatively dry summer conditions and possibly MW-42 downtime.

Water samples were obtained at various treatment locations and screened for volatile organic compounds (VOCs) by photo-ionization detector (PID). VOCs were measured at 0.1 ppm at the raw water influent and 0.5 ppm at the treated effluent. Influent VOC concentrations show a significant decline since system start-up and have been below 2 ppm for the last seven O&M events (i.e. March 2014 through September 2015). Laboratory samples were obtained for analysis of VOCs and PCBs.

Should you have any questions regarding any aspect of this inspection report, please do not hesitate to call. The next operation and maintenance visit will be scheduled in December 2015.

APPENDIX C

LABORATORY DATA REPORTS

HYDRAULIC CONTROL SYSTEM ANALYTICAL DATA

ANALYTICAL REPORT

Lab Number:	L1510586
Client:	TRC Environmental Consultants Wannalancit Mills 650 Suffolk Street Lowell, MA 01854
ATTN:	David Sullivan
Phone:	(978) 656-3565
Project Name:	NBHS IRA O&M
Project Number:	115058
Report Date:	05/21/15

The original project report/data package is held by Alpha Analytical. This report/data package is paginated and should be reproduced only in its entirety. Alpha Analytical holds no responsibility for results and/or data that are not consistent with the original.

Certifications & Approvals: MA (M-MA086), NY (11148), CT (PH-0574), NH (2003), NJ NELAP (MA935), RI (LAO00065), ME (MA00086), PA (68-03671), VA (460195), MD (348), IL (200077), NC (666), TX (T104704476), DOD (L2217), USDA (Permit #P-330-11-00240).

Eight Walkup Drive, Westborough, MA 01581-1019
508-898-9220 (Fax) 508-898-9193 800-624-9220 - www.alphalab.com

Project Name: NBHS IRA O&M
Project Number: 115058

Lab Number: L1510586
Report Date: 05/21/15

Alpha Sample ID	Client ID	Matrix	Sample Location	Collection Date/Time	Receive Date
L1510586-01	INFLUENT	WATER	NEW BEDFORD, MA	05/14/15 10:30	05/14/15
L1510586-02	EFFLUENT	WATER	NEW BEDFORD, MA	05/14/15 11:00	05/14/15
L1510586-03	TRIP BLANK	WATER	NEW BEDFORD, MA	05/14/15 00:00	05/14/15

Project Name: NBHS IRA O&M **Lab Number:** L1510586

Project Number: 115058 **Report Date:** 05/21/15

MADEP MCP Response Action Analytical Report Certification

This form provides certifications for all samples performed by MCP methods. Please refer to the Sample Results and Container Information sections of this report for specification of MCP methods used for each analysis. The following questions pertain only to MCP Analytical Methods.

An affirmative response to questions A through F is required for "Presumptive Certainty" status		
A	Were all samples received in a condition consistent with those described on the Chain-of-Custody, properly preserved (including temperature) in the field or laboratory, and prepared/analyzed within method holding times?	YES
B	Were the analytical method(s) and all associated QC requirements specified in the selected CAM protocol(s) followed?	YES
C	Were all required corrective actions and analytical response actions specified in the selected CAM protocol(s) implemented for all identified performance standard non-conformances?	YES
D	Does the laboratory report comply with all the reporting requirements specified in CAM VII A, "Quality Assurance and Quality Control Guidelines for the Acquisition and Reporting of Analytical Data?"	YES
E a.	VPH, EPH, and APH Methods only: Was each method conducted without significant modification(s)? (Refer to the individual method(s) for a list of significant modifications).	N/A
E b.	APH and TO-15 Methods only: Was the complete analyte list reported for each method?	N/A
F	Were all applicable CAM protocol QC and performance standard non-conformances identified and evaluated in a laboratory narrative (including all "No" responses to Questions A through E)?	YES

A response to questions G, H and I is required for "Presumptive Certainty" status		
G	Were the reporting limits at or below all CAM reporting limits specified in the selected CAM protocol(s)?	NO
H	Were all QC performance standards specified in the CAM protocol(s) achieved?	NO
I	Were results reported for the complete analyte list specified in the selected CAM protocol(s)?	YES

For any questions answered "No", please refer to the case narrative section on the following page(s).

Please note that sample matrix information is located in the Sample Results section of this report.

Project Name: NBHS IRA O&M
Project Number: 115058

Lab Number: L1510586
Report Date: 05/21/15

Case Narrative

The samples were received in accordance with the Chain of Custody and no significant deviations were encountered during the preparation or analysis unless otherwise noted. Sample Receipt, Container Information, and the Chain of Custody are located at the back of the report.

Results contained within this report relate only to the samples submitted under this Alpha Lab Number and meet all of the requirements of NELAC, for all NELAC accredited parameters. The data presented in this report is organized by parameter (i.e. VOC, SVOC, etc.). Sample specific Quality Control data (i.e. Surrogate Spike Recovery) is reported at the end of the target analyte list for each individual sample, followed by the Laboratory Batch Quality Control at the end of each parameter. If a sample was re-analyzed or re-extracted due to a required quality control corrective action and if both sets of data are reported, the Laboratory ID of the re-analysis or re-extraction is designated with an "R" or "RE", respectively. When multiple Batch Quality Control elements are reported (e.g. more than one LCS), the associated samples for each element are noted in the grey shaded header line of each data table. Any Laboratory Batch, Sample Specific % recovery or RPD value that is outside the listed Acceptance Criteria is bolded in the report. All specific QC information is also incorporated in the Data Usability format of our Data Merger tool where it can be reviewed along with any associated usability implications. Soil/sediments, solids and tissues are reported on a dry weight basis unless otherwise noted. Definitions of all data qualifiers and acronyms used in this report are provided in the Glossary located at the back of the report.

In reference to questions H (CAM) or 4 (RCP) when "NO" is checked, the performance criteria for CAM and RCP methods allow for some quality control failures to occur and still be within method compliance. In these instances the specific failure is not narrated but noted in the associated QC table. The information is also incorporated in the Data Usability format of our Data Merger tool where it can be reviewed along with any associated usability implications.

Please see the associated ADEx data file for a comparison of laboratory reporting limits that were achieved with the regulatory Numerical Standards requested on the Chain of Custody.

HOLD POLICY
For samples submitted on hold, Alpha's policy is to hold samples (with the exception of Air canisters) free of charge for 21 calendar days from the date the project is completed. After 21 calendar days, we will dispose of all samples submitted including those put on hold unless you have contacted your Client Service Representative and made arrangements for Alpha to continue to hold the samples. Air canisters will be disposed after 3 business days from the date the project is completed.

Please contact Client Services at 800-624-9220 with any questions.

Project Name: NBHS IRA O&M **Lab Number:** L1510586
Project Number: 115058 **Report Date:** 05/21/15

Case Narrative (continued)

MCP Related Narratives

Volatile Organics

The Effluent (L1510586-02) results are greater than the Influent (L1510586-01) results. The sample containers were verified as being labeled correctly by the laboratory.

In reference to question H:

The initial calibration, associated with L1510586-01 through -03, did not meet the method required minimum response factor on the lowest calibration standard for 1,4-dioxane (0.00558), as well as the average response factor for 1,4-dioxane.

The continuing calibration standard, associated with L1510586-01 through -03, is outside the acceptance criteria for several compounds; however, it is within overall method allowances. A copy of the continuing calibration standard is included as an addendum to this report.

PCBs

L1510586-01 has elevated detection limits due to the dilution required by the elevated concentrations of target compounds in the sample.

In reference to question G:

L1510586-01: All of the target analytes, with the exception of Aroclor 1254, did not achieve the requested CAM reporting limits.

I, the undersigned, attest under the pains and penalties of perjury that, to the best of my knowledge and belief and based upon my personal inquiry of those responsible for providing the information contained in this analytical report, such information is accurate and complete. This certificate of analysis is not complete unless this page accompanies any and all pages of this report.

Authorized Signature: Cristin Walker

Title: Technical Director/Representative Date: 05/21/15

ORGANICS

VOLATILES

Project Name: NBHS IRA O&M
Project Number: 115058
Lab Number: L1510586
Report Date: 05/21/15

SAMPLE RESULTS

Lab ID: L1510586-01
Client ID: INFLUENT
Sample Location: NEW BEDFORD, MA
Matrix: Water
Analytical Method: 97,8260C
Analytical Date: 05/20/15 20:44
Analyst: PK

Date Collected: 05/14/15 10:30
Date Received: 05/14/15
Field Prep: Not Specified

Parameter	Result	Qualifier	Units	RL	MDL	Dilution Factor
MCP Volatile Organics - Westborough Lab						
Methylene chloride	ND		ug/l	2.0	--	1
1,1-Dichloroethane	ND		ug/l	1.0	--	1
Chloroform	ND		ug/l	1.0	--	1
Carbon tetrachloride	ND		ug/l	1.0	--	1
1,2-Dichloropropane	ND		ug/l	1.0	--	1
Dibromochloromethane	ND		ug/l	1.0	--	1
1,1,2-Trichloroethane	ND		ug/l	1.0	--	1
Tetrachloroethene	ND		ug/l	1.0	--	1
Chlorobenzene	ND		ug/l	1.0	--	1
Trichlorofluoromethane	ND		ug/l	2.0	--	1
1,2-Dichloroethane	ND		ug/l	1.0	--	1
1,1,1-Trichloroethane	ND		ug/l	1.0	--	1
Bromodichloromethane	ND		ug/l	1.0	--	1
trans-1,3-Dichloropropene	ND		ug/l	0.50	--	1
cis-1,3-Dichloropropene	ND		ug/l	0.50	--	1
1,3-Dichloropropene, Total	ND		ug/l	0.50	--	1
1,1-Dichloropropene	ND		ug/l	2.0	--	1
Bromoform	ND		ug/l	2.0	--	1
1,1,2,2-Tetrachloroethane	ND		ug/l	1.0	--	1
Benzene	ND		ug/l	0.50	--	1
Toluene	ND		ug/l	1.0	--	1
Ethylbenzene	ND		ug/l	1.0	--	1
Chloromethane	ND		ug/l	2.0	--	1
Bromomethane	ND		ug/l	2.0	--	1
Vinyl chloride	7.8		ug/l	1.0	--	1
Chloroethane	ND		ug/l	2.0	--	1
1,1-Dichloroethene	ND		ug/l	1.0	--	1
trans-1,2-Dichloroethene	2.0		ug/l	1.0	--	1
Trichloroethene	6.1		ug/l	1.0	--	1
1,2-Dichlorobenzene	ND		ug/l	1.0	--	1

Project Name: NBHS IRA O&M **Lab Number:** L1510586

Project Number: 115058 **Report Date:** 05/21/15

SAMPLE RESULTS

Lab ID: L1510586-01 Date Collected: 05/14/15 10:30

Client ID: INFLUENT Date Received: 05/14/15

Sample Location: NEW BEDFORD, MA Field Prep: Not Specified

Parameter	Result	Qualifier	Units	RL	MDL	Dilution Factor
MCP Volatile Organics - Westborough Lab						
1,3-Dichlorobenzene	ND		ug/l	1.0	--	1
1,4-Dichlorobenzene	2.3		ug/l	1.0	--	1
Methyl tert butyl ether	ND		ug/l	2.0	--	1
p/m-Xylene	ND		ug/l	2.0	--	1
o-Xylene	ND		ug/l	1.0	--	1
Xylene (Total)	ND		ug/l	1.0	--	1
cis-1,2-Dichloroethene	2.8		ug/l	1.0	--	1
1,2-Dichloroethene (total)	4.8		ug/l	1.0	--	1
Dibromomethane	ND		ug/l	2.0	--	1
1,2,3-Trichloropropane	ND		ug/l	2.0	--	1
Styrene	ND		ug/l	1.0	--	1
Dichlorodifluoromethane	ND		ug/l	2.0	--	1
Acetone	ND		ug/l	5.0	--	1
Carbon disulfide	ND		ug/l	2.0	--	1
2-Butanone	ND		ug/l	5.0	--	1
4-Methyl-2-pentanone	ND		ug/l	5.0	--	1
2-Hexanone	ND		ug/l	5.0	--	1
Bromochloromethane	ND		ug/l	2.0	--	1
Tetrahydrofuran	ND		ug/l	2.0	--	1
2,2-Dichloropropane	ND		ug/l	2.0	--	1
1,2-Dibromoethane	ND		ug/l	2.0	--	1
1,3-Dichloropropane	ND		ug/l	2.0	--	1
1,1,1,2-Tetrachloroethane	ND		ug/l	1.0	--	1
Bromobenzene	ND		ug/l	2.0	--	1
n-Butylbenzene	ND		ug/l	2.0	--	1
sec-Butylbenzene	ND		ug/l	2.0	--	1
tert-Butylbenzene	ND		ug/l	2.0	--	1
o-Chlorotoluene	ND		ug/l	2.0	--	1
p-Chlorotoluene	ND		ug/l	2.0	--	1
1,2-Dibromo-3-chloropropane	ND		ug/l	2.0	--	1
Hexachlorobutadiene	ND		ug/l	0.60	--	1
Isopropylbenzene	ND		ug/l	2.0	--	1
p-Isopropyltoluene	ND		ug/l	2.0	--	1
Naphthalene	ND		ug/l	2.0	--	1
n-Propylbenzene	ND		ug/l	2.0	--	1
1,2,3-Trichlorobenzene	ND		ug/l	2.0	--	1
1,2,4-Trichlorobenzene	ND		ug/l	2.0	--	1
1,3,5-Trimethylbenzene	ND		ug/l	2.0	--	1
1,2,4-Trimethylbenzene	ND		ug/l	2.0	--	1

Project Name: NBHS IRA O&M **Lab Number:** L1510586

Project Number: 115058 **Report Date:** 05/21/15

SAMPLE RESULTS

Lab ID: L1510586-01 Date Collected: 05/14/15 10:30

Client ID: INFLUENT Date Received: 05/14/15

Sample Location: NEW BEDFORD, MA Field Prep: Not Specified

Parameter	Result	Qualifier	Units	RL	MDL	Dilution Factor
MCP Volatile Organics - Westborough Lab						
Ethyl ether	ND		ug/l	2.0	--	1
Isopropyl Ether	ND		ug/l	2.0	--	1
Ethyl-Tert-Butyl-Ether	ND		ug/l	2.0	--	1
Tertiary-Amyl Methyl Ether	ND		ug/l	2.0	--	1
1,4-Dioxane	ND		ug/l	250	--	1

Surrogate	% Recovery	Qualifier	Acceptance Criteria
1,2-Dichloroethane-d4	103		70-130
Toluene-d8	96		70-130
4-Bromofluorobenzene	95		70-130
Dibromofluoromethane	104		70-130

Project Name: NBHS IRA O&M
Project Number: 115058
Lab Number: L1510586
Report Date: 05/21/15

SAMPLE RESULTS

Lab ID: L1510586-02
Client ID: EFFLUENT
Sample Location: NEW BEDFORD, MA
Matrix: Water
Analytical Method: 97,8260C
Analytical Date: 05/20/15 21:17
Analyst: PK

Date Collected: 05/14/15 11:00
Date Received: 05/14/15
Field Prep: Not Specified

Parameter	Result	Qualifier	Units	RL	MDL	Dilution Factor
MCP Volatile Organics - Westborough Lab						
Methylene chloride	ND		ug/l	2.0	--	1
1,1-Dichloroethane	ND		ug/l	1.0	--	1
Chloroform	ND		ug/l	1.0	--	1
Carbon tetrachloride	ND		ug/l	1.0	--	1
1,2-Dichloropropane	ND		ug/l	1.0	--	1
Dibromochloromethane	ND		ug/l	1.0	--	1
1,1,2-Trichloroethane	ND		ug/l	1.0	--	1
Tetrachloroethene	ND		ug/l	1.0	--	1
Chlorobenzene	ND		ug/l	1.0	--	1
Trichlorofluoromethane	ND		ug/l	2.0	--	1
1,2-Dichloroethane	ND		ug/l	1.0	--	1
1,1,1-Trichloroethane	ND		ug/l	1.0	--	1
Bromodichloromethane	ND		ug/l	1.0	--	1
trans-1,3-Dichloropropene	ND		ug/l	0.50	--	1
cis-1,3-Dichloropropene	ND		ug/l	0.50	--	1
1,3-Dichloropropene, Total	ND		ug/l	0.50	--	1
1,1-Dichloropropene	ND		ug/l	2.0	--	1
Bromoform	ND		ug/l	2.0	--	1
1,1,2,2-Tetrachloroethane	ND		ug/l	1.0	--	1
Benzene	ND		ug/l	0.50	--	1
Toluene	ND		ug/l	1.0	--	1
Ethylbenzene	ND		ug/l	1.0	--	1
Chloromethane	ND		ug/l	2.0	--	1
Bromomethane	ND		ug/l	2.0	--	1
Vinyl chloride	ND		ug/l	1.0	--	1
Chloroethane	ND		ug/l	2.0	--	1
1,1-Dichloroethene	ND		ug/l	1.0	--	1
trans-1,2-Dichloroethene	24		ug/l	1.0	--	1
Trichloroethene	ND		ug/l	1.0	--	1
1,2-Dichlorobenzene	ND		ug/l	1.0	--	1

Project Name: NBHS IRA O&M **Lab Number:** L1510586

Project Number: 115058 **Report Date:** 05/21/15

SAMPLE RESULTS

Lab ID: L1510586-02 Date Collected: 05/14/15 11:00

Client ID: EFFLUENT Date Received: 05/14/15

Sample Location: NEW BEDFORD, MA Field Prep: Not Specified

Parameter	Result	Qualifier	Units	RL	MDL	Dilution Factor
MCP Volatile Organics - Westborough Lab						
1,3-Dichlorobenzene	ND		ug/l	1.0	--	1
1,4-Dichlorobenzene	ND		ug/l	1.0	--	1
Methyl tert butyl ether	ND		ug/l	2.0	--	1
p/m-Xylene	ND		ug/l	2.0	--	1
o-Xylene	ND		ug/l	1.0	--	1
Xylene (Total)	ND		ug/l	1.0	--	1
cis-1,2-Dichloroethene	26		ug/l	1.0	--	1
1,2-Dichloroethene (total)	50		ug/l	1.0	--	1
Dibromomethane	ND		ug/l	2.0	--	1
1,2,3-Trichloropropane	ND		ug/l	2.0	--	1
Styrene	ND		ug/l	1.0	--	1
Dichlorodifluoromethane	ND		ug/l	2.0	--	1
Acetone	ND		ug/l	5.0	--	1
Carbon disulfide	ND		ug/l	2.0	--	1
2-Butanone	ND		ug/l	5.0	--	1
4-Methyl-2-pentanone	ND		ug/l	5.0	--	1
2-Hexanone	ND		ug/l	5.0	--	1
Bromochloromethane	ND		ug/l	2.0	--	1
Tetrahydrofuran	ND		ug/l	2.0	--	1
2,2-Dichloropropane	ND		ug/l	2.0	--	1
1,2-Dibromoethane	ND		ug/l	2.0	--	1
1,3-Dichloropropane	ND		ug/l	2.0	--	1
1,1,1,2-Tetrachloroethane	ND		ug/l	1.0	--	1
Bromobenzene	ND		ug/l	2.0	--	1
n-Butylbenzene	ND		ug/l	2.0	--	1
sec-Butylbenzene	ND		ug/l	2.0	--	1
tert-Butylbenzene	ND		ug/l	2.0	--	1
o-Chlorotoluene	ND		ug/l	2.0	--	1
p-Chlorotoluene	ND		ug/l	2.0	--	1
1,2-Dibromo-3-chloropropane	ND		ug/l	2.0	--	1
Hexachlorobutadiene	ND		ug/l	0.60	--	1
Isopropylbenzene	ND		ug/l	2.0	--	1
p-Isopropyltoluene	ND		ug/l	2.0	--	1
Naphthalene	ND		ug/l	2.0	--	1
n-Propylbenzene	ND		ug/l	2.0	--	1
1,2,3-Trichlorobenzene	ND		ug/l	2.0	--	1
1,2,4-Trichlorobenzene	ND		ug/l	2.0	--	1
1,3,5-Trimethylbenzene	ND		ug/l	2.0	--	1
1,2,4-Trimethylbenzene	ND		ug/l	2.0	--	1

Project Name: NBHS IRA O&M **Lab Number:** L1510586

Project Number: 115058 **Report Date:** 05/21/15

SAMPLE RESULTS

Lab ID: L1510586-02 Date Collected: 05/14/15 11:00

Client ID: EFFLUENT Date Received: 05/14/15

Sample Location: NEW BEDFORD, MA Field Prep: Not Specified

Parameter	Result	Qualifier	Units	RL	MDL	Dilution Factor
MCP Volatile Organics - Westborough Lab						
Ethyl ether	ND		ug/l	2.0	--	1
Isopropyl Ether	ND		ug/l	2.0	--	1
Ethyl-Tert-Butyl-Ether	ND		ug/l	2.0	--	1
Tertiary-Amyl Methyl Ether	ND		ug/l	2.0	--	1
1,4-Dioxane	ND		ug/l	250	--	1

Surrogate	% Recovery	Qualifier	Acceptance Criteria
1,2-Dichloroethane-d4	103		70-130
Toluene-d8	96		70-130
4-Bromofluorobenzene	100		70-130
Dibromofluoromethane	104		70-130

Project Name: NBHS IRA O&M
Project Number: 115058
Lab Number: L1510586
Report Date: 05/21/15

SAMPLE RESULTS

Lab ID: L1510586-03
Client ID: TRIP BLANK
Sample Location: NEW BEDFORD, MA
Matrix: Water
Analytical Method: 97,8260C
Analytical Date: 05/20/15 20:11
Analyst: PK

Date Collected: 05/14/15 00:00
Date Received: 05/14/15
Field Prep: Not Specified

Parameter	Result	Qualifier	Units	RL	MDL	Dilution Factor
MCP Volatile Organics - Westborough Lab						
Methylene chloride	ND		ug/l	2.0	--	1
1,1-Dichloroethane	ND		ug/l	1.0	--	1
Chloroform	ND		ug/l	1.0	--	1
Carbon tetrachloride	ND		ug/l	1.0	--	1
1,2-Dichloropropane	ND		ug/l	1.0	--	1
Dibromochloromethane	ND		ug/l	1.0	--	1
1,1,2-Trichloroethane	ND		ug/l	1.0	--	1
Tetrachloroethene	ND		ug/l	1.0	--	1
Chlorobenzene	ND		ug/l	1.0	--	1
Trichlorofluoromethane	ND		ug/l	2.0	--	1
1,2-Dichloroethane	ND		ug/l	1.0	--	1
1,1,1-Trichloroethane	ND		ug/l	1.0	--	1
Bromodichloromethane	ND		ug/l	1.0	--	1
trans-1,3-Dichloropropene	ND		ug/l	0.50	--	1
cis-1,3-Dichloropropene	ND		ug/l	0.50	--	1
1,3-Dichloropropene, Total	ND		ug/l	0.50	--	1
1,1-Dichloropropene	ND		ug/l	2.0	--	1
Bromoform	ND		ug/l	2.0	--	1
1,1,2,2-Tetrachloroethane	ND		ug/l	1.0	--	1
Benzene	ND		ug/l	0.50	--	1
Toluene	ND		ug/l	1.0	--	1
Ethylbenzene	ND		ug/l	1.0	--	1
Chloromethane	ND		ug/l	2.0	--	1
Bromomethane	ND		ug/l	2.0	--	1
Vinyl chloride	ND		ug/l	1.0	--	1
Chloroethane	ND		ug/l	2.0	--	1
1,1-Dichloroethene	ND		ug/l	1.0	--	1
trans-1,2-Dichloroethene	ND		ug/l	1.0	--	1
Trichloroethene	ND		ug/l	1.0	--	1
1,2-Dichlorobenzene	ND		ug/l	1.0	--	1

Project Name: NBHS IRA O&M **Lab Number:** L1510586

Project Number: 115058 **Report Date:** 05/21/15

SAMPLE RESULTS

Lab ID: L1510586-03 Date Collected: 05/14/15 00:00

Client ID: TRIP BLANK Date Received: 05/14/15

Sample Location: NEW BEDFORD, MA Field Prep: Not Specified

Parameter	Result	Qualifier	Units	RL	MDL	Dilution Factor
MCP Volatile Organics - Westborough Lab						
1,3-Dichlorobenzene	ND		ug/l	1.0	--	1
1,4-Dichlorobenzene	ND		ug/l	1.0	--	1
Methyl tert butyl ether	ND		ug/l	2.0	--	1
p/m-Xylene	ND		ug/l	2.0	--	1
o-Xylene	ND		ug/l	1.0	--	1
Xylene (Total)	ND		ug/l	1.0	--	1
cis-1,2-Dichloroethene	ND		ug/l	1.0	--	1
1,2-Dichloroethene (total)	ND		ug/l	1.0	--	1
Dibromomethane	ND		ug/l	2.0	--	1
1,2,3-Trichloropropane	ND		ug/l	2.0	--	1
Styrene	ND		ug/l	1.0	--	1
Dichlorodifluoromethane	ND		ug/l	2.0	--	1
Acetone	ND		ug/l	5.0	--	1
Carbon disulfide	ND		ug/l	2.0	--	1
2-Butanone	ND		ug/l	5.0	--	1
4-Methyl-2-pentanone	ND		ug/l	5.0	--	1
2-Hexanone	ND		ug/l	5.0	--	1
Bromochloromethane	ND		ug/l	2.0	--	1
Tetrahydrofuran	ND		ug/l	2.0	--	1
2,2-Dichloropropane	ND		ug/l	2.0	--	1
1,2-Dibromoethane	ND		ug/l	2.0	--	1
1,3-Dichloropropane	ND		ug/l	2.0	--	1
1,1,1,2-Tetrachloroethane	ND		ug/l	1.0	--	1
Bromobenzene	ND		ug/l	2.0	--	1
n-Butylbenzene	ND		ug/l	2.0	--	1
sec-Butylbenzene	ND		ug/l	2.0	--	1
tert-Butylbenzene	ND		ug/l	2.0	--	1
o-Chlorotoluene	ND		ug/l	2.0	--	1
p-Chlorotoluene	ND		ug/l	2.0	--	1
1,2-Dibromo-3-chloropropane	ND		ug/l	2.0	--	1
Hexachlorobutadiene	ND		ug/l	0.60	--	1
Isopropylbenzene	ND		ug/l	2.0	--	1
p-Isopropyltoluene	ND		ug/l	2.0	--	1
Naphthalene	ND		ug/l	2.0	--	1
n-Propylbenzene	ND		ug/l	2.0	--	1
1,2,3-Trichlorobenzene	ND		ug/l	2.0	--	1
1,2,4-Trichlorobenzene	ND		ug/l	2.0	--	1
1,3,5-Trimethylbenzene	ND		ug/l	2.0	--	1
1,2,4-Trimethylbenzene	ND		ug/l	2.0	--	1

Project Name: NBHS IRA O&M **Lab Number:** L1510586

Project Number: 115058 **Report Date:** 05/21/15

SAMPLE RESULTS

Lab ID: L1510586-03 Date Collected: 05/14/15 00:00

Client ID: TRIP BLANK Date Received: 05/14/15

Sample Location: NEW BEDFORD, MA Field Prep: Not Specified

Parameter	Result	Qualifier	Units	RL	MDL	Dilution Factor
MCP Volatile Organics - Westborough Lab						
Ethyl ether	ND		ug/l	2.0	--	1
Isopropyl Ether	ND		ug/l	2.0	--	1
Ethyl-Tert-Butyl-Ether	ND		ug/l	2.0	--	1
Tertiary-Amyl Methyl Ether	ND		ug/l	2.0	--	1
1,4-Dioxane	ND		ug/l	250	--	1

Surrogate	% Recovery	Qualifier	Acceptance Criteria
1,2-Dichloroethane-d4	104		70-130
Toluene-d8	94		70-130
4-Bromofluorobenzene	101		70-130
Dibromofluoromethane	108		70-130

Project Name: NBHS IRA O&M **Lab Number:** L1510586

Project Number: 115058 **Report Date:** 05/21/15

Method Blank Analysis
Batch Quality Control

Analytical Method: 97,8260C
Analytical Date: 05/20/15 19:04
Analyst: PK

Parameter	Result	Qualifier	Units	RL	MDL
MCP Volatile Organics - Westborough Lab for sample(s): 01-03 Batch: WG786792-3					
Methylene chloride	ND		ug/l	2.0	--
1,1-Dichloroethane	ND		ug/l	1.0	--
Chloroform	ND		ug/l	1.0	--
Carbon tetrachloride	ND		ug/l	1.0	--
1,2-Dichloropropane	ND		ug/l	1.0	--
Dibromochloromethane	ND		ug/l	1.0	--
1,1,2-Trichloroethane	ND		ug/l	1.0	--
Tetrachloroethene	ND		ug/l	1.0	--
Chlorobenzene	ND		ug/l	1.0	--
Trichlorofluoromethane	ND		ug/l	2.0	--
1,2-Dichloroethane	ND		ug/l	1.0	--
1,1,1-Trichloroethane	ND		ug/l	1.0	--
Bromodichloromethane	ND		ug/l	1.0	--
trans-1,3-Dichloropropene	ND		ug/l	0.50	--
cis-1,3-Dichloropropene	ND		ug/l	0.50	--
1,3-Dichloropropene, Total	ND		ug/l	0.50	--
1,1-Dichloropropene	ND		ug/l	2.0	--
Bromoform	ND		ug/l	2.0	--
1,1,2,2-Tetrachloroethane	ND		ug/l	1.0	--
Benzene	ND		ug/l	0.50	--
Toluene	ND		ug/l	1.0	--
Ethylbenzene	ND		ug/l	1.0	--
Chloromethane	ND		ug/l	2.0	--
Bromomethane	ND		ug/l	2.0	--
Vinyl chloride	ND		ug/l	1.0	--
Chloroethane	ND		ug/l	2.0	--
1,1-Dichloroethene	ND		ug/l	1.0	--
trans-1,2-Dichloroethene	ND		ug/l	1.0	--
Trichloroethene	ND		ug/l	1.0	--

Project Name: NBHS IRA O&M **Lab Number:** L1510586

Project Number: 115058 **Report Date:** 05/21/15

Method Blank Analysis
Batch Quality Control

Analytical Method: 97,8260C
Analytical Date: 05/20/15 19:04
Analyst: PK

Parameter	Result	Qualifier	Units	RL	MDL
MCP Volatile Organics - Westborough Lab for sample(s): 01-03 Batch: WG786792-3					
1,2-Dichlorobenzene	ND		ug/l	1.0	--
1,3-Dichlorobenzene	ND		ug/l	1.0	--
1,4-Dichlorobenzene	ND		ug/l	1.0	--
Methyl tert butyl ether	ND		ug/l	2.0	--
p/m-Xylene	ND		ug/l	2.0	--
o-Xylene	ND		ug/l	1.0	--
Xylene (Total)	ND		ug/l	1.0	--
cis-1,2-Dichloroethene	ND		ug/l	1.0	--
1,2-Dichloroethene (total)	ND		ug/l	1.0	--
Dibromomethane	ND		ug/l	2.0	--
1,2,3-Trichloropropane	ND		ug/l	2.0	--
Styrene	ND		ug/l	1.0	--
Dichlorodifluoromethane	ND		ug/l	2.0	--
Acetone	ND		ug/l	5.0	--
Carbon disulfide	ND		ug/l	2.0	--
2-Butanone	ND		ug/l	5.0	--
4-Methyl-2-pentanone	ND		ug/l	5.0	--
2-Hexanone	ND		ug/l	5.0	--
Bromochloromethane	ND		ug/l	2.0	--
Tetrahydrofuran	ND		ug/l	2.0	--
2,2-Dichloropropane	ND		ug/l	2.0	--
1,2-Dibromoethane	ND		ug/l	2.0	--
1,3-Dichloropropane	ND		ug/l	2.0	--
1,1,1,2-Tetrachloroethane	ND		ug/l	1.0	--
Bromobenzene	ND		ug/l	2.0	--
n-Butylbenzene	ND		ug/l	2.0	--
sec-Butylbenzene	ND		ug/l	2.0	--
tert-Butylbenzene	ND		ug/l	2.0	--
o-Chlorotoluene	ND		ug/l	2.0	--

Project Name: NBHS IRA O&M
Project Number: 115058
Lab Number: L1510586
Report Date: 05/21/15

Method Blank Analysis
Batch Quality Control

Analytical Method: 97,8260C
Analytical Date: 05/20/15 19:04
Analyst: PK

Parameter	Result	Qualifier	Units	RL	MDL
MCP Volatile Organics - Westborough Lab for sample(s): 01-03 Batch: WG786792-3					
p-Chlorotoluene	ND		ug/l	2.0	--
1,2-Dibromo-3-chloropropane	ND		ug/l	2.0	--
Hexachlorobutadiene	ND		ug/l	0.60	--
Isopropylbenzene	ND		ug/l	2.0	--
p-Isopropyltoluene	ND		ug/l	2.0	--
Naphthalene	ND		ug/l	2.0	--
n-Propylbenzene	ND		ug/l	2.0	--
1,2,3-Trichlorobenzene	ND		ug/l	2.0	--
1,2,4-Trichlorobenzene	ND		ug/l	2.0	--
1,3,5-Trimethylbenzene	ND		ug/l	2.0	--
1,2,4-Trimethylbenzene	ND		ug/l	2.0	--
Ethyl ether	ND		ug/l	2.0	--
Isopropyl Ether	ND		ug/l	2.0	--
Ethyl-Tert-Butyl-Ether	ND		ug/l	2.0	--
Tertiary-Amyl Methyl Ether	ND		ug/l	2.0	--
1,4-Dioxane	ND		ug/l	250	--

Surrogate	%Recovery	Qualifier	Acceptance Criteria
1,2-Dichloroethane-d4	100		70-130
Toluene-d8	93		70-130
4-Bromofluorobenzene	107		70-130
Dibromofluoromethane	107		70-130

Lab Control Sample Analysis
Batch Quality Control

Project Name: NBHS IRA O&M
Project Number: 115058

Lab Number: L1510586
Report Date: 05/21/15

Parameter	LCS %Recovery	Qual	LCSD %Recovery	Qual	%Recovery Limits	RPD	Qual	RPD Limits
MCP Volatile Organics - Westborough Lab Associated sample(s): 01-03 Batch: WG786792-1 WG786792-2								
Methylene chloride	101		103		70-130	2		20
1,1-Dichloroethane	98		104		70-130	6		20
Chloroform	101		105		70-130	4		20
Carbon tetrachloride	101		107		70-130	6		20
1,2-Dichloropropane	96		99		70-130	3		20
Dibromochloromethane	94		100		70-130	6		20
1,1,2-Trichloroethane	94		96		70-130	2		20
Tetrachloroethene	100		103		70-130	3		20
Chlorobenzene	94		98		70-130	4		20
Trichlorofluoromethane	107		112		70-130	5		20
1,2-Dichloroethane	100		108		70-130	8		20
1,1,1-Trichloroethane	103		108		70-130	5		20
Bromodichloromethane	103		102		70-130	1		20
trans-1,3-Dichloropropene	97		98		70-130	1		20
cis-1,3-Dichloropropene	99		103		70-130	4		20
1,1-Dichloropropene	100		103		70-130	3		20
Bromoform	88		99		70-130	12		20
1,1,2,2-Tetrachloroethane	95		102		70-130	7		20
Benzene	98		100		70-130	2		20
Toluene	99		96		70-130	3		20
Ethylbenzene	95		98		70-130	3		20

Lab Control Sample Analysis
Batch Quality Control

Project Name: NBHS IRA O&M

Project Number: 115058

Lab Number: L1510586

Report Date: 05/21/15

Parameter	LCS %Recovery	Qual	LCSD %Recovery	Qual	%Recovery Limits	RPD	Qual	RPD Limits
MCP Volatile Organics - Westborough Lab Associated sample(s): 01-03 Batch: WG786792-1 WG786792-2								
Chloromethane	102		97		70-130	5		20
Bromomethane	88		93		70-130	6		20
Vinyl chloride	95		101		70-130	6		20
Chloroethane	106		113		70-130	6		20
1,1-Dichloroethene	102		106		70-130	4		20
trans-1,2-Dichloroethene	100		101		70-130	1		20
Trichloroethene	101		101		70-130	0		20
1,2-Dichlorobenzene	94		99		70-130	5		20
1,3-Dichlorobenzene	93		98		70-130	5		20
1,4-Dichlorobenzene	94		99		70-130	5		20
Methyl tert butyl ether	97		104		70-130	7		20
p/m-Xylene	96		98		70-130	2		20
o-Xylene	96		98		70-130	2		20
cis-1,2-Dichloroethene	99		104		70-130	5		20
Dibromomethane	98		106		70-130	8		20
1,2,3-Trichloropropane	91		101		70-130	10		20
Styrene	96		101		70-130	5		20
Dichlorodifluoromethane	93		98		70-130	5		20
Acetone	130		111		70-130	16		20
Carbon disulfide	101		98		70-130	3		20
2-Butanone	107		104		70-130	3		20

Lab Control Sample Analysis
Batch Quality Control

Project Name: NBHS IRA O&M
Project Number: 115058

Lab Number: L1510586
Report Date: 05/21/15

Parameter	LCS %Recovery	Qual	LCSD %Recovery	Qual	%Recovery Limits	RPD	Qual	RPD Limits
MCP Volatile Organics - Westborough Lab Associated sample(s): 01-03 Batch: WG786792-1 WG786792-2								
4-Methyl-2-pentanone	96		105		70-130	9		20
2-Hexanone	94		103		70-130	9		20
Bromochloromethane	104		106		70-130	2		20
Tetrahydrofuran	97		108		70-130	11		20
2,2-Dichloropropane	108		110		70-130	2		20
1,2-Dibromoethane	99		104		70-130	5		20
1,3-Dichloropropane	94		101		70-130	7		20
1,1,1,2-Tetrachloroethane	96		100		70-130	4		20
Bromobenzene	94		98		70-130	4		20
n-Butylbenzene	98		101		70-130	3		20
sec-Butylbenzene	95		96		70-130	1		20
tert-Butylbenzene	93		98		70-130	5		20
o-Chlorotoluene	93		96		70-130	3		20
p-Chlorotoluene	91		95		70-130	4		20
1,2-Dibromo-3-chloropropane	84		95		70-130	12		20
Hexachlorobutadiene	104		101		70-130	3		20
Isopropylbenzene	90		103		70-130	13		20
p-Isopropyltoluene	95		100		70-130	5		20
Naphthalene	89		99		70-130	11		20
n-Propylbenzene	95		99		70-130	4		20
1,2,3-Trichlorobenzene	93		96		70-130	3		20

Lab Control Sample Analysis
Batch Quality Control

Project Name: NBHS IRA O&M
Project Number: 115058
Lab Number: L1510586
Report Date: 05/21/15

Parameter	LCS %Recovery	Qual	LCSD %Recovery	Qual	%Recovery Limits	RPD	Qual	RPD Limits
MCP Volatile Organics - Westborough Lab Associated sample(s): 01-03 Batch: WG786792-1 WG786792-2								
1,2,4-Trichlorobenzene	93		97		70-130	4		20
1,3,5-Trimethylbenzene	92		96		70-130	4		20
1,2,4-Trimethylbenzene	93		98		70-130	5		20
Ethyl ether	98		106		70-130	8		20
Isopropyl Ether	101		105		70-130	4		20
Ethyl-Tert-Butyl-Ether	97		104		70-130	7		20
Tertiary-Amyl Methyl Ether	97		103		70-130	6		20
1,4-Dioxane	85		85		70-130	0		20

Surrogate	LCS %Recovery	Qual	LCSD %Recovery	Qual	Acceptance Criteria
1,2-Dichloroethane-d4	99		99		70-130
Toluene-d8	95		96		70-130
4-Bromofluorobenzene	99		95		70-130
Dibromofluoromethane	103		107		70-130

PCBS

Project Name: NBHS IRA O&M
Project Number: 115058

Lab Number: L1510586
Report Date: 05/21/15

SAMPLE RESULTS

Lab ID: L1510586-01 D
Client ID: INFLUENT
Sample Location: NEW BEDFORD, MA
Matrix: Water
Analytical Method: 97,8082
Analytical Date: 05/20/15 15:44
Analyst: JW

Date Collected: 05/14/15 10:30
Date Received: 05/14/15
Field Prep: Not Specified
Extraction Method: EPA 3510C
Extraction Date: 05/19/15 13:09
Cleanup Method: EPA 3665A
Cleanup Date: 05/20/15
Cleanup Method: EPA 3660B
Cleanup Date: 05/20/15

Parameter	Result	Qualifier	Units	RL	MDL	Dilution Factor	Column
MCP Polychlorinated Biphenyls - Westborough Lab							
Aroclor 1016	ND		ug/l	1.25	--	5	A
Aroclor 1221	ND		ug/l	1.25	--	5	A
Aroclor 1232	ND		ug/l	1.25	--	5	A
Aroclor 1242	ND		ug/l	1.25	--	5	A
Aroclor 1248	ND		ug/l	1.25	--	5	A
Aroclor 1254	13.9		ug/l	1.25	--	5	A
Aroclor 1260	ND		ug/l	1.25	--	5	A
Aroclor 1262	ND		ug/l	1.25	--	5	A
Aroclor 1268	ND		ug/l	1.25	--	5	A
PCBs, Total	13.9		ug/l	1.25	--	5	A

Surrogate	% Recovery	Qualifier	Acceptance Criteria	Column
2,4,5,6-Tetrachloro-m-xylene	54		30-150	A
Decachlorobiphenyl	73		30-150	A
2,4,5,6-Tetrachloro-m-xylene	49		30-150	B
Decachlorobiphenyl	70		30-150	B

Project Name: NBHS IRA O&M
Project Number: 115058

Lab Number: L1510586
Report Date: 05/21/15

SAMPLE RESULTS

Lab ID:	L1510586-02
Client ID:	EFFLUENT
Sample Location:	NEW BEDFORD, MA
Matrix:	Water
Analytical Method:	97,8082
Analytical Date:	05/20/15 05:41
Analyst:	JW

Date Collected:	05/14/15 11:00
Date Received:	05/14/15
Field Prep:	Not Specified
Extraction Method:	EPA 3510C
Extraction Date:	05/19/15 13:09
Cleanup Method:	EPA 3665A
Cleanup Date:	05/20/15
Cleanup Method:	EPA 3660B
Cleanup Date:	05/20/15

Parameter	Result	Qualifier	Units	RL	MDL	Dilution Factor	Column
MCP Polychlorinated Biphenyls - Westborough Lab							
Aroclor 1016	ND		ug/l	0.250	--	1	A
Aroclor 1221	ND		ug/l	0.250	--	1	A
Aroclor 1232	ND		ug/l	0.250	--	1	A
Aroclor 1242	ND		ug/l	0.250	--	1	A
Aroclor 1248	ND		ug/l	0.250	--	1	A
Aroclor 1254	ND		ug/l	0.250	--	1	A
Aroclor 1260	ND		ug/l	0.250	--	1	A
Aroclor 1262	ND		ug/l	0.250	--	1	A
Aroclor 1268	ND		ug/l	0.250	--	1	A
PCBs, Total	ND		ug/l	0.250	--	1	A

Surrogate	% Recovery	Qualifier	Acceptance Criteria	Column
2,4,5,6-Tetrachloro-m-xylene	66		30-150	A
Decachlorobiphenyl	79		30-150	A
2,4,5,6-Tetrachloro-m-xylene	72		30-150	B
Decachlorobiphenyl	81		30-150	B

Project Name: NBHS IRA O&M

Project Number: 115058

Lab Number: L1510586

Report Date: 05/21/15

Method Blank Analysis
Batch Quality Control

Analytical Method: 97,8082A
Analytical Date: 05/20/15 04:34
Analyst: JW

Extraction Method: EPA 3510C
Extraction Date: 05/19/15 13:09
Cleanup Method: EPA 3665A
Cleanup Date: 05/20/15
Cleanup Method: EPA 3660B
Cleanup Date: 05/20/15

Parameter	Result	Qualifier	Units	RL	MDL	Column
MCP Polychlorinated Biphenyls - Westborough Lab for sample(s): 01-02 Batch: WG786243-1						
Aroclor 1016	ND		ug/l	0.250	--	A
Aroclor 1221	ND		ug/l	0.250	--	A
Aroclor 1232	ND		ug/l	0.250	--	A
Aroclor 1242	ND		ug/l	0.250	--	A
Aroclor 1248	ND		ug/l	0.250	--	A
Aroclor 1254	ND		ug/l	0.250	--	A
Aroclor 1260	ND		ug/l	0.250	--	A
Aroclor 1262	ND		ug/l	0.250	--	A
Aroclor 1268	ND		ug/l	0.250	--	A
PCBs, Total	ND		ug/l	0.250	--	A

Surrogate	%Recovery	Qualifier	Acceptance Criteria	Column
2,4,5,6-Tetrachloro-m-xylene	64		30-150	A
Decachlorobiphenyl	76		30-150	A
2,4,5,6-Tetrachloro-m-xylene	70		30-150	B
Decachlorobiphenyl	79		30-150	B

Lab Control Sample Analysis
Batch Quality Control

Project Name: NBHS IRA O&M
Project Number: 115058

Lab Number: L1510586
Report Date: 05/21/15

Parameter	LCS %Recovery	Qual	LCSD %Recovery	Qual	%Recovery Limits	RPD	Qual	RPD Limits	Column
MCP Polychlorinated Biphenyls - Westborough Lab Associated sample(s): 01-02 Batch: WG786243-2 WG786243-3									
Aroclor 1016	91		89		40-140	2		20	A
Aroclor 1260	85		78		40-140	9		20	A

Surrogate	LCS %Recovery	Qual	LCSD %Recovery	Qual	Acceptance Criteria	Column
2,4,5,6-Tetrachloro-m-xylene	68		65		30-150	A
Decachlorobiphenyl	77		76		30-150	A
2,4,5,6-Tetrachloro-m-xylene	72		69		30-150	B
Decachlorobiphenyl	81		79		30-150	B

Project Name: NBHS IRA O&M
Project Number: 115058

Lab Number: L1510586
Report Date: 05/21/15

Sample Receipt and Container Information

Were project specific reporting limits specified? YES

Reagent H2O Preserved Vials Frozen on: NA

Cooler Information Custody Seal

Cooler	
A	Absent

Container Information

Container ID	Container Type	Cooler	pH	Temp deg C	Pres	Seal	Analysis(*)
L1510586-01A	Vial HCl preserved	A	N/A	4.4	Y	Absent	MCP-8260-10(14)
L1510586-01B	Vial HCl preserved	A	N/A	4.4	Y	Absent	MCP-8260-10(14)
L1510586-01C	Vial HCl preserved	A	N/A	4.4	Y	Absent	MCP-8260-10(14)
L1510586-01D	Amber 1000ml unpreserved	A	7	4.4	Y	Absent	MCP-8082-10(365)
L1510586-01E	Amber 1000ml unpreserved	A	7	4.4	Y	Absent	MCP-8082-10(365)
L1510586-02A	Vial HCl preserved	A	N/A	4.4	Y	Absent	MCP-8260-10(14)
L1510586-02B	Vial HCl preserved	A	N/A	4.4	Y	Absent	MCP-8260-10(14)
L1510586-02C	Vial HCl preserved	A	N/A	4.4	Y	Absent	MCP-8260-10(14)
L1510586-02D	Amber 1000ml unpreserved	A	7	4.4	Y	Absent	MCP-8082-10(365)
L1510586-02E	Amber 1000ml unpreserved	A	7	4.4	Y	Absent	MCP-8082-10(365)
L1510586-03A	Vial HCl preserved	A	N/A	4.4	Y	Absent	MCP-8260-10(14)
L1510586-03B	Vial HCl preserved	A	N/A	4.4	Y	Absent	MCP-8260-10(14)

*Values in parentheses indicate holding time in days

Project Name:	NBHS IRA O&M	**Lab Number:**	L1510586
Project Number:	115058	**Report Date:**	05/21/15

GLOSSARY

Acronyms

EDL	- Estimated Detection Limit: This value represents the level to which target analyte concentrations are reported as estimated values, when those target analyte concentrations are quantified below the reporting limit (RL). The EDL includes any adjustments from dilutions, concentrations or moisture content, where applicable. The use of EDLs is specific to the analysis of PAHs using Solid-Phase Microextraction (SPME).
EPA	- Environmental Protection Agency.
LCS	- Laboratory Control Sample: A sample matrix, free from the analytes of interest, spiked with verified known amounts of analytes or a material containing known and verified amounts of analytes.
LCSD	- Laboratory Control Sample Duplicate: Refer to LCS.
LFB	- Laboratory Fortified Blank: A sample matrix, free from the analytes of interest, spiked with verified known amounts of analytes or a material containing known and verified amounts of analytes.
MDL	- Method Detection Limit: This value represents the level to which target analyte concentrations are reported as estimated values, when those target analyte concentrations are quantified below the reporting limit (RL). The MDL includes any adjustments from dilutions, concentrations or moisture content, where applicable.
MS	- Matrix Spike Sample: A sample prepared by adding a known mass of target analyte to a specified amount of matrix sample for which an independent estimate of target analyte concentration is available.
MSD	- Matrix Spike Sample Duplicate: Refer to MS.
NA	- Not Applicable.
NC	- Not Calculated: Term is utilized when one or more of the results utilized in the calculation are non-detect at the parameter's reporting unit.
NI	- Not Ignitable.
NP	- Non-Plastic: Term is utilized for the analysis of Atterberg Limits in soil.
RL	- Reporting Limit: The value at which an instrument can accurately measure an analyte at a specific concentration. The RL includes any adjustments from dilutions, concentrations or moisture content, where applicable.
RPD	- Relative Percent Difference: The results from matrix and/or matrix spike duplicates are primarily designed to assess the precision of analytical results in a given matrix and are expressed as relative percent difference (RPD). Values which are less than five times the reporting limit for any individual parameter are evaluated by utilizing the absolute difference between the values; although the RPD value will be provided in the report.
SRM	- Standard Reference Material: A reference sample of a known or certified value that is of the same or similar matrix as the associated field samples.

Footnotes

1	- The reference for this analyte should be considered modified since this analyte is absent from the target analyte list of the original method.

Terms

Total: With respect to Organic analyses, a 'Total' result is defined as the summation of results for individual isomers or Aroclors. If a 'Total' result is requested, the results of its individual components will also be reported. This is applicable to 'Total' results for methods 8260, 8081 and 8082.

Analytical Method: Both the document from which the method originates and the analytical reference method. (Example: EPA 8260B is shown as 1,8260B.) The codes for the reference method documents are provided in the References section of the Addendum.

Data Qualifiers

A	- Spectra identified as "Aldol Condensation Product".
B	- The analyte was detected above the reporting limit in the associated method blank. Flag only applies to associated field samples that have detectable concentrations of the analyte at less than ten times (10x) the concentration found in the blank. For MCP-related projects, flag only applies to associated field samples that have detectable concentrations of the analyte at less than ten times (10x) the concentration found in the blank. For DOD-related projects, flag only applies to associated field samples that have detectable concentrations of the analyte at less than ten times (10x) the concentration found in the blank AND the analyte was detected above one-half the reporting limit (or above the reporting limit for common lab contaminants) in the associated method blank. For NJ-Air-related projects, flag only applies to associated field samples that have detectable concentrations of the analyte above the reporting limit. For NJ-related projects (excluding Air), flag only applies to associated field samples that have detectable concentrations of the analyte, which was detected above the reporting limit in the associated method blank or above five times the reporting limit for common lab contaminants (Phthalates, Acetone, Methylene Chloride, 2-Butanone).
C	- Co-elution: The target analyte co-elutes with a known lab standard (i.e. surrogate, internal standards, etc.) for co-extracted analyses.
D	- Concentration of analyte was quantified from diluted analysis. Flag only applies to field samples that have detectable concentrations of the analyte.

Report Format: Data Usability Report

Project Name:	NBHS IRA O&M	**Lab Number:**	L1510586
Project Number:	115058	**Report Date:**	05/21/15

Data Qualifiers

E - Concentration of analyte exceeds the range of the calibration curve and/or linear range of the instrument.

G - The concentration may be biased high due to matrix interferences (i.e, co-elution) with non-target compound(s). The result should be considered estimated.

H - The analysis of pH was performed beyond the regulatory-required holding time of 15 minutes from the time of sample collection.

I - The lower value for the two columns has been reported due to obvious interference.

M - Reporting Limit (RL) exceeds the MCP CAM Reporting Limit for this analyte.

NJ - Presumptive evidence of compound. This represents an estimated concentration for Tentatively Identified Compounds (TICs), where the identification is based on a mass spectral library search.

P - The RPD between the results for the two columns exceeds the method-specified criteria.

Q - The quality control sample exceeds the associated acceptance criteria. For DOD-related projects, LCS and/or Continuing Calibration Standard exceedences are also qualified on all associated sample results. Note: This flag is not applicable for matrix spike recoveries when the sample concentration is greater than 4x the spike added or for batch duplicate RPD when the sample concentrations are less than 5x the RL. (Metals only.)

R - Analytical results are from sample re-analysis.

RE - Analytical results are from sample re-extraction.

S - Analytical results are from modified screening analysis.

J - Estimated value. This represents an estimated concentration for Tentatively Identified Compounds (TICs).

ND - Not detected at the reporting limit (RL) for the sample.

Report Format: Data Usability Report

Project Name: NBHS IRA O&M
Project Number: 115058
Lab Number: L1510586
Report Date: 05/21/15

REFERENCES

97 EPA Test Methods (SW-846) with QC Requirements & Performance Standards for the Analysis of EPA SW-846 Methods under the Massachusetts Contingency Plan, WSC-CAM-IIA, IIB, IIIA, IIIB, IIIC, IIID, VA, VB, VC, VIA, VIB, VIIIA and VIIIB, July 2010.

LIMITATION OF LIABILITIES

Alpha Analytical performs services with reasonable care and diligence normal to the analytical testing laboratory industry. In the event of an error, the sole and exclusive responsibility of Alpha Analytical shall be to re-perform the work at it's own expense. In no event shall Alpha Analytical be held liable for any incidental, consequential or special damages, including but not limited to, damages in any way connected with the use of, interpretation of, information or analysis provided by Alpha Analytical.

We strongly urge our clients to comply with EPA protocol regarding sample volume, preservation, cooling, containers, sampling procedures, holding time and splitting of samples in the field.

Certification Information

Last revised December 16, 2014

The following analytes are not included in our NELAP Scope of Accreditation:

Westborough Facility
EPA 524.2: Acetone, 2-Butanone (Methyl ethyl ketone (MEK)), Tert-butyl alcohol, 2-Hexanone, Tetrahydrofuran, 1,3,5-Trichlorobenzene, 4-Methyl-2-pentanone (MIBK), Carbon disulfide, Diethyl ether.
EPA 8260C: 1,2,4,5-Tetramethylbenzene, 4-Ethyltoluene, Iodomethane (methyl iodide), Methyl methacrylate, Azobenzene.
EPA 8270D: 1-Methylnaphthalene, Dimethylnaphthalene,1,4-Diphenylhydrazine.
EPA 625: 4-Chloroaniline, 4-Methylphenol.
SM4500: Soil: Total Phosphorus, TKN, NO2, NO3.
EPA 9071: Total Petroleum Hydrocarbons, Oil & Grease.

Mansfield Facility
EPA 8270D: Biphenyl.
EPA 2540D: TSS
EPA TO-15: Halothane, 2,4,4-Trimethyl-2-pentene, 2,4,4-Trimethyl-1-pentene, Thiophene, 2-Methylthiophene, 3-Methylthiophene, 2-Ethylthiophene, 1,2,3-Trimethylbenzene, Indan, Indene, 1,2,4,5-Tetramethylbenzene, Benzothiophene, 1-Methylnaphthalene.

The following analytes are included in our Massachusetts DEP Scope of Accreditation, Westborough Facility:

Drinking Water
EPA 200.8: Sb,As,Ba,Be,Cd,Cr,Cu,Pb,Ni,Se,Tl; **EPA 200.7**: Ba,Be,Ca,Cd,Cr,Cu,Na; **EPA 245.1:** Mercury;
EPA 300.0: Nitrate-N, Fluoride, Sulfate; **EPA 353.2**: Nitrate-N, Nitrite-N; **SM4500NO3-F**: Nitrate-N, Nitrite-N; **SM4500F-C, SM4500CN-CE, EPA 180.1, SM2130B, SM4500Cl-D, SM2320B, SM2540C, SM4500H-B**
EPA 332: Perchlorate.
Microbiology: **SM9215B; SM9223-P/A, SM9223B-Colilert-QT, Enterolert-QT.**

Non-Potable Water
EPA 200.8: Al,Sb,As,Be,Cd,Cr,Cu,Pb,Mn,Ni,Se,Ag,Tl,Zn;
EPA 200.7: Al,Sb,As,Be,Cd,Ca,Cr,Co,Cu,Fe,Pb,Mg,Mn,Mo,Ni,K,Se,Ag,Na,Sr,Ti,Tl,V,Zn;
EPA 245.1, SM4500H,B, EPA 120.1, SM2510B, SM2540C, SM2340B, SM2320B, SM4500CL-E, SM4500F-BC, SM426C, SM4500NH3-BH, **EPA 350.1**: Ammonia-N, **LACHAT 10-107-06-1-B**: Ammonia-N, **SM4500NO3-F,**
EPA 353.2: Nitrate-N**, SM4500NH3-BC-NES, EPA 351.1, SM4500P-E, SM4500P-B, E, SM5220D, EPA 410.4, SM5210B, SM5310C, SM4500CL-D, EPA 1664, SM14 510AC, EPA 420.1, SM4500-CN-CE, SM2540D.**
EPA 624: Volatile Halocarbons & Aromatics,
EPA 608: Chlordane, Toxaphene, Aldrin, alpha-BHC, beta-BHC, gamma-BHC, delta-BHC, Dieldrin, DDD, DDE, DDT, Endosulfan I, Endosulfan II, Endosulfan sulfate, Endrin, Endrin Aldehyde, Heptachlor, Heptachlor Epoxide, PCBs
EPA 625: SVOC (Acid/Base/Neutral Extractables), **EPA 600/4-81-045**: PCB-Oil.
Microbiology: **SM9223B-Colilert-QT; Enterolert-QT, SM9222D-MF**.

For a complete listing of analytes and methods, please contact your Alpha Project Manager.

CHAIN OF CUSTODY

PAGE 1 OF 1

ALPHA ANALYTICAL
World Class Chemistry
8 Walkup Drive
Westboro, MA 01581
Tel: 508-898-9220
320 Forbes Blvd
Mansfield, MA 02048
Tel: 508-822-9300

Date Rec'd in Lab: 5/14/15

ALPHA Job #: L1505586

Project Information

Project Name: NBHS IRA O&M

Project Location: NEW BEDFORD MA

Project #: 115058

Project Manager: D. SULLIVAN.

ALPHA Quote #:

Report Information - Data Deliverables

☑ ADEx ☑ EMAIL

Billing Information

☐ Same as Client info PO #: C115058

Client Information

Client: TRC

Address: 650 SUFFOLK ST.
LOWELL, MA

Phone: 978-970-5600

Email: DSULLIVAN@TRCSOLUTIONS.COM

Regulatory Requirements & Project Information Requirements

☑ Yes ☐ No MA MCP Analytical Methods ☐ Yes ☐ No CT RCP Analytical Methods
☐ Yes ☐ No Matrix Spike Required on this SDG? (Required for MCP Inorganics)
☐ Yes ☐ No GW1 Standards (Info Required for Metals & EPH with Targets)
☐ Yes ☐ No NPDES RGP
☐ Other State /Fed Program _____ Criteria _____

Turn-Around Time

☑ Standard ☐ RUSH (only confirmed if pre-approved!)

Date Due:

Additional Project Information:

ANALYSIS: VOC: ☑ 8260 ☐ 624 ☐ 524.2; SVOC: ☐ ABN ☐ PAH; METALS: ☐ MCP 13 ☐ MCP 14 ☐ RCP 15; METALS: ☐ RCRA5 ☐ RCRA8 ☐ PP13; EPH: ☐ Ranges & Targets ☐ Ranges Only; VPH: ☐ Ranges & Targets ☐ Ranges Only; ☑ PCB ☐ PEST; TPH: ☐ Quant Only ☐ Fingerprint

SAMPLE INFO
Filtration
☐ Field
☐ Lab to do
Preservation
☐ Lab to do

ALPHA Lab ID (Lab Use Only)	Sample ID	Collection Date	Collection Time	Sample Matrix	Sampler Initials	VOC	SVOC	METALS	METALS	EPH	VPH	PCB	TPH							Sample Comments	TOTAL # BOTTLES
10586 -01	INFLUENT	5/14/15	10:30	I	JF	✓						✓									5
-02	EFFLUENT	5/14/15	11:00	E	JF	✓						✓									5
-03	TRIP BLANK	5/13/15	—	DW		✓															2

Container Type	V	A																
Preservative	B	A																

Container Type
P= Plastic
A= Amber glass
V= Vial
G= Glass
B= Bacteria cup
C= Cube
O= Other
E= Encore
D= BOD Bottle

Preservative
A= None
B= HCl
C= HNO_3
D= H_2SO_4
E= NaOH
F= MeOH
G= $NaHSO_4$
H = $Na_2S_2O_3$
I= Ascorbic Acid
J = NH_4Cl
K= Zn Acetate
O= Other

Relinquished By:	Date/Time	Received By:	Date/Time
[illegible]	5/14/15	[illegible]	5/14/15 1203
[illegible]	5/14/15 1906	[illegible]	5/14/15 1906
[illegible]	5/14/15 1952	Graham Phillips	5/14/15 1952

All samples submitted are subject to Alpha's Terms and Conditions. See reverse side.

FORM NO: 01-01 (rev. 12-Mar-2012)

7A
Volatile Organics CONTINUING CALIBRATION CHECK

Lab Name: Alpha Analytical Labs

SDG No.: L1510586

Instrument ID: Jack.i Calibration Date: 20-MAY-2015 Time: 17:24

Lab File ID: 0520A01 Init. Calib. Date(s): 11-MAY-2 12-MAY-2

Sample No: 8260 CCAL Init. Calib. Times : 20:57 00:16

Compound	RRF	RRF	MIN RRF	%D	MAX %D	
dichlorodifluoromethane	.58843	.54588	.1	-7	20	
chloromethane	1.0530	1.0766	.1	2	20	
vinyl chloride	.86928	.82968	.1	-5	20	
bromomethane	.30223	.26706	.1	-12	20	
chloroethane	.42791	.45514	.1	6	20	
trichlorofluoromethane	.82317	.88212	.1	7	20	
ethyl ether	.32914	.32369	.05	-2	20	
1,1,-dichloroethene	.5556	.56889	.1	2	20	
carbon disulfide	1.6563	1.6769	.1	1	20	
methylene chloride	.61825	.62483	.1	1	20	
acetone	100	130	.1	30	20	F
trans-1,2-dichloroethene	.68282	.68436	.1	0	20	
methyl tert butyl ether	1.7827	1.7302	.1	-3	20	
Ethyl-Tert-Butyl-Ether	2.4935	2.4178	.05	-3	20	
Diisopropyl Ether	3.0977	3.1178	.01	1	20	
1,1-dichloroethane	1.3399	1.3163	.2	-2	20	
cis-1,2-dichloroethene	.75723	.75295	.1	-1	20	
2,2-dichloropropane	1.0157	1.0935	.05	8	20	
bromochloromethane	.34583	.35839	.05	4	20	
chloroform	1.2221	1.2327	.2	1	20	
carbontetrachloride	.92525	.93165	.1	1	20	
tetrahydrofuran	.2492	.24229	.05	-3	20	
1,1,1-trichloroethane	1.0989	1.1373	.1	3	20	
Tertiary-Amyl Methyl Ether	1.8698	1.8097	.05	-3	20	
1,1-dichloropropene	1.0100	1.0056	.05	0	20	
2-butanone	100	107	.1	7	20	
benzene	2.9223	2.8729	.5	-2	20	
1,2-dichloroethane	.96888	.97181	.1	0	20	
trichloroethene	.76446	.77406	.2	1	20	
dibromomethane	.37289	.36728	.05	-2	20	
1,2-dichloropropane	.80011	.76794	.1	-4	20	
bromodichloromethane	1.0528	1.0893	.2	3	20	
1,4-dioxane	.00573	.00489	.05	-15	20	F
cis-1,3-dichloropropene	1.1377	1.1231	.2	-1	20	
toluene	2.4800	2.4484	.4	-1	20	
tetrachloroethene	1.0494	1.0461	.2	0	20	
4-methyl-2-pentanone	.23238	.22367	.1	-4	20	
trans-1,3-dichloropropene	1.2144	1.1820	.1	-3	20	

FORM VII MCP-8260-10

7A
CONTINUING CALIBRATION CHECK

Lab Name: Alpha Analytical Labs

SDG No.: L1510586

Instrument ID: Jack.i Calibration Date: 20-MAY-2015 Time: 17:24

Lab File ID: 0520A01 Init. Calib. Date(s): 11-MAY-2 12-MAY-2

Sample No: 8260 CCAL Init. Calib. Times : 20:57 00:16

Compound	$\overline{RRF}$	RRF	MIN RRF	%D	MAX %D
1,1,2-trichloroethane	.61719	.58309	.1	-6	20
chlorodibromomethane	.81047	.76046	.1	-6	20
1,3-dichloropropane	1.2314	1.1597	.05	-6	20
1,2-dibromoethane	.68862	.68357	.1	-1	20
2-hexanone	.56498	.5307	.1	-6	20
chlorobenzene	2.7330	2.5677	.5	-6	20
ethyl benzene	4.7795	4.5507	.1	-5	20
1,1,1,2-tetrachloroethane	.94794	.91365	.05	-4	20
p/m xylene	1.8329	1.7662	.1	-4	20
o xylene	1.7446	1.6838	.3	-3	20
styrene	2.9210	2.8133	.3	-4	20
bromoform	.84401	.74639	.1	-12	20
isopropylbenzene	10.431	9.4177	.1	-10	20
bromobenzene	2.0646	1.9371	.05	-6	20
n-propylbenzene	10.671	10.124	.05	-5	20
1,1,2,2,-tetrachloroethane	1.5242	1.4454	.3	-5	20
2-chlorotoluene	7.0887	6.5862	.05	-7	20
1,2,3-trichloropropane	1.2494	1.1376	.05	-9	20
1,3,5-trimethybenzene	7.4613	6.8397	.05	-8	20
4-chorotoluene	6.2946	5.7018	.05	-9	20
tert-butylbenzene	6.5652	6.0900	.05	-7	20
1,2,4-trimethylbenzene	7.2110	6.6934	.05	-7	20
sec-butylbenzene	9.9203	9.4112	.01	-5	20
p-isopropyltoluene	8.0579	7.6254	.05	-5	20
1,3-dichlorobenzene	4.1677	3.8625	.6	-7	20
1,4-dichlorobenzene	4.0812	3.8500	.5	-6	20
n-butylbenzene	6.9701	6.8653	.05	-2	20
1,2-dichlorobenzene	3.6304	3.4062	.4	-6	20
1,2-dibromo-3-chloropropane	.24688	.20785	.05	-16	20
hexachlorobutadiene	.80088	.83363	.05	4	20
1,2,4-trichlorobenzene	2.0679	1.9275	.2	-7	20
naphthalene	4.3054	3.8226	.05	-11	20
1,2,3-trichlorobenzene	1.7358	1.6192	.05	-7	20
dibromofluoromethane	.23719	.24537	.05	3	20
1,2-dichloroethane-d4	.30228	.30014	.05	-1	20
toluene-d8	1.2320	1.1713	.01	-5	20
4-bromofluorobenzene	.88375	.87728	.05	-1	20

FORM VII MCP-8260-10

ANALYTICAL REPORT

Lab Number:	L1512557
Client:	TRC Environmental Consultants Wannalancit Mills 650 Suffolk Street Lowell, MA 01854
ATTN:	David Sullivan
Phone:	(978) 656-3565
Project Name:	NBHS IRA O&M
Project Number:	115058
Report Date:	06/12/15

The original project report/data package is held by Alpha Analytical. This report/data package is paginated and should be reproduced only in its entirety. Alpha Analytical holds no responsibility for results and/or data that are not consistent with the original.

Certifications & Approvals: MA (M-MA086), NY (11148), CT (PH-0574), NH (2003), NJ NELAP (MA935), RI (LAO00065), ME (MA00086), PA (68-03671), VA (460195), MD (348), IL (200077), NC (666), TX (T104704476), DOD (L2217), USDA (Permit #P-330-11-00240).

Eight Walkup Drive, Westborough, MA 01581-1019
508-898-9220 (Fax) 508-898-9193 800-624-9220 - www.alphalab.com

Project Name: NBHS IRA O&M
Project Number: 115058

Lab Number: L1512557
Report Date: 06/12/15

Alpha Sample ID	Client ID	Matrix	Sample Location	Collection Date/Time	Receive Date
L1512557-01	INFLUENT	WATER	NEW BEDFORD, MA	06/04/15 10:00	06/05/15
L1512557-02	EFFLUENT	WATER	NEW BEDFORD, MA	06/04/15 11:00	06/05/15

Project Name: NBHS IRA O&M **Lab Number:** L1512557

Project Number: 115058 **Report Date:** 06/12/15

MADEP MCP Response Action Analytical Report Certification

This form provides certifications for all samples performed by MCP methods. Please refer to the Sample Results and Container Information sections of this report for specification of MCP methods used for each analysis. The following questions pertain only to MCP Analytical Methods.

An affirmative response to questions A through F is required for "Presumptive Certainty" status		
A	Were all samples received in a condition consistent with those described on the Chain-of-Custody, properly preserved (including temperature) in the field or laboratory, and prepared/analyzed within method holding times?	YES
B	Were the analytical method(s) and all associated QC requirements specified in the selected CAM protocol(s) followed?	YES
C	Were all required corrective actions and analytical response actions specified in the selected CAM protocol(s) implemented for all identified performance standard non-conformances?	YES
D	Does the laboratory report comply with all the reporting requirements specified in CAM VII A, "Quality Assurance and Quality Control Guidelines for the Acquisition and Reporting of Analytical Data?"	YES
E a.	VPH, EPH, and APH Methods only: Was each method conducted without significant modification(s)? (Refer to the individual method(s) for a list of significant modifications).	N/A
E b.	APH and TO-15 Methods only: Was the complete analyte list reported for each method?	N/A
F	Were all applicable CAM protocol QC and performance standard non-conformances identified and evaluated in a laboratory narrative (including all "No" responses to Questions A through E)?	YES

A response to questions G, H and I is required for "Presumptive Certainty" status		
G	Were the reporting limits at or below all CAM reporting limits specified in the selected CAM protocol(s)?	NO
H	Were all QC performance standards specified in the CAM protocol(s) achieved?	NO
I	Were results reported for the complete analyte list specified in the selected CAM protocol(s)?	YES

For any questions answered "No", please refer to the case narrative section on the following page(s).

Please note that sample matrix information is located in the Sample Results section of this report.

Project Name: NBHS IRA O&M
Project Number: 115058

Lab Number: L1512557
Report Date: 06/12/15

Case Narrative

The samples were received in accordance with the Chain of Custody and no significant deviations were encountered during the preparation or analysis unless otherwise noted. Sample Receipt, Container Information, and the Chain of Custody are located at the back of the report.

Results contained within this report relate only to the samples submitted under this Alpha Lab Number and meet all of the requirements of NELAC, for all NELAC accredited parameters. The data presented in this report is organized by parameter (i.e. VOC, SVOC, etc.). Sample specific Quality Control data (i.e. Surrogate Spike Recovery) is reported at the end of the target analyte list for each individual sample, followed by the Laboratory Batch Quality Control at the end of each parameter. If a sample was re-analyzed or re-extracted due to a required quality control corrective action and if both sets of data are reported, the Laboratory ID of the re-analysis or re-extraction is designated with an "R" or "RE", respectively. When multiple Batch Quality Control elements are reported (e.g. more than one LCS), the associated samples for each element are noted in the grey shaded header line of each data table. Any Laboratory Batch, Sample Specific % recovery or RPD value that is outside the listed Acceptance Criteria is bolded in the report. All specific QC information is also incorporated in the Data Usability format of our Data Merger tool where it can be reviewed along with any associated usability implications. Soil/sediments, solids and tissues are reported on a dry weight basis unless otherwise noted. Definitions of all data qualifiers and acronyms used in this report are provided in the Glossary located at the back of the report.

In reference to questions H (CAM) or 4 (RCP) when "NO" is checked, the performance criteria for CAM and RCP methods allow for some quality control failures to occur and still be within method compliance. In these instances the specific failure is not narrated but noted in the associated QC table. The information is also incorporated in the Data Usability format of our Data Merger tool where it can be reviewed along with any associated usability implications.

Please see the associated ADEx data file for a comparison of laboratory reporting limits that were achieved with the regulatory Numerical Standards requested on the Chain of Custody.

HOLD POLICY
For samples submitted on hold, Alpha's policy is to hold samples (with the exception of Air canisters) free of charge for 21 calendar days from the date the project is completed. After 21 calendar days, we will dispose of all samples submitted including those put on hold unless you have contacted your Client Service Representative and made arrangements for Alpha to continue to hold the samples. Air canisters will be disposed after 3 business days from the date the project is completed.

Please contact Client Services at 800-624-9220 with any questions.

Project Name: NBHS IRA O&M **Lab Number:** L1512557
Project Number: 115058 **Report Date:** 06/12/15

Case Narrative (continued)

MCP Related Narratives

Volatile Organics

The Effluent (L1512557-01) results are greater than the Influent (L1512557-01) results. The sample containers were verified as being labeled correctly by the laboratory, and the reported results were confirmed by the screen analysis results.

In reference to question H:

The initial calibration, associated with L1512557-01 and -02, did not meet the method required minimum response factor on the lowest calibration standard for 1,4-dioxane (0.00558), as well as the average response factor for 1,4-dioxane.

The continuing calibration standard, associated with L1512557-01 and -02, is outside the acceptance criteria for several compounds; however, it is within overall method allowances. A copy of the continuing calibration standard is included as an addendum to this report.

PCBs

L1512557-01 has elevated detection limits due to the dilution required by the elevated concentrations of target compounds in the sample.

In reference to question G:

All of the target analytes, with the exception of Aroclor 1242 and Aroclor 1254, did not achieve the requested CAM reporting limits.

I, the undersigned, attest under the pains and penalties of perjury that, to the best of my knowledge and belief and based upon my personal inquiry of those responsible for providing the information contained in this analytical report, such information is accurate and complete. This certificate of analysis is not complete unless this page accompanies any and all pages of this report.

Authorized Signature: Cristin Walker

Title: Technical Director/Representative Date: 06/12/15

ORGANICS

VOLATILES

Project Name: NBHS IRA O&M
Project Number: 115058
Lab Number: L1512557
Report Date: 06/12/15

SAMPLE RESULTS

Lab ID: L1512557-01
Client ID: INFLUENT
Sample Location: NEW BEDFORD, MA
Matrix: Water
Analytical Method: 97,8260C
Analytical Date: 06/12/15 07:58
Analyst: MM

Date Collected: 06/04/15 10:00
Date Received: 06/05/15
Field Prep: Not Specified

Parameter	Result	Qualifier	Units	RL	MDL	Dilution Factor
MCP Volatile Organics - Westborough Lab						
Methylene chloride	ND		ug/l	2.0	--	1
1,1-Dichloroethane	ND		ug/l	1.0	--	1
Chloroform	ND		ug/l	1.0	--	1
Carbon tetrachloride	ND		ug/l	1.0	--	1
1,2-Dichloropropane	ND		ug/l	1.0	--	1
Dibromochloromethane	ND		ug/l	1.0	--	1
1,1,2-Trichloroethane	ND		ug/l	1.0	--	1
Tetrachloroethene	ND		ug/l	1.0	--	1
Chlorobenzene	ND		ug/l	1.0	--	1
Trichlorofluoromethane	ND		ug/l	2.0	--	1
1,2-Dichloroethane	ND		ug/l	1.0	--	1
1,1,1-Trichloroethane	ND		ug/l	1.0	--	1
Bromodichloromethane	ND		ug/l	1.0	--	1
trans-1,3-Dichloropropene	ND		ug/l	0.50	--	1
cis-1,3-Dichloropropene	ND		ug/l	0.50	--	1
1,3-Dichloropropene, Total	ND		ug/l	0.50	--	1
1,1-Dichloropropene	ND		ug/l	2.0	--	1
Bromoform	ND		ug/l	2.0	--	1
1,1,2,2-Tetrachloroethane	ND		ug/l	1.0	--	1
Benzene	ND		ug/l	0.50	--	1
Toluene	ND		ug/l	1.0	--	1
Ethylbenzene	ND		ug/l	1.0	--	1
Chloromethane	ND		ug/l	2.0	--	1
Bromomethane	ND		ug/l	2.0	--	1
Vinyl chloride	13		ug/l	1.0	--	1
Chloroethane	ND		ug/l	2.0	--	1
1,1-Dichloroethene	ND		ug/l	1.0	--	1
trans-1,2-Dichloroethene	4.7		ug/l	1.0	--	1
Trichloroethene	5.2		ug/l	1.0	--	1
1,2-Dichlorobenzene	ND		ug/l	1.0	--	1

Project Name: NBHS IRA O&M **Lab Number:** L1512557

Project Number: 115058 **Report Date:** 06/12/15

SAMPLE RESULTS

Lab ID: L1512557-01 Date Collected: 06/04/15 10:00

Client ID: INFLUENT Date Received: 06/05/15

Sample Location: NEW BEDFORD, MA Field Prep: Not Specified

Parameter	Result	Qualifier	Units	RL	MDL	Dilution Factor
MCP Volatile Organics - Westborough Lab						
1,3-Dichlorobenzene	ND		ug/l	1.0	--	1
1,4-Dichlorobenzene	1.9		ug/l	1.0	--	1
Methyl tert butyl ether	ND		ug/l	2.0	--	1
p/m-Xylene	ND		ug/l	2.0	--	1
o-Xylene	ND		ug/l	1.0	--	1
Xylene (Total)	ND		ug/l	1.0	--	1
cis-1,2-Dichloroethene	8.1		ug/l	1.0	--	1
1,2-Dichloroethene (total)	13		ug/l	1.0	--	1
Dibromomethane	ND		ug/l	2.0	--	1
1,2,3-Trichloropropane	ND		ug/l	2.0	--	1
Styrene	ND		ug/l	1.0	--	1
Dichlorodifluoromethane	ND		ug/l	2.0	--	1
Acetone	ND		ug/l	5.0	--	1
Carbon disulfide	ND		ug/l	2.0	--	1
2-Butanone	ND		ug/l	5.0	--	1
4-Methyl-2-pentanone	ND		ug/l	5.0	--	1
2-Hexanone	ND		ug/l	5.0	--	1
Bromochloromethane	ND		ug/l	2.0	--	1
Tetrahydrofuran	ND		ug/l	2.0	--	1
2,2-Dichloropropane	ND		ug/l	2.0	--	1
1,2-Dibromoethane	ND		ug/l	2.0	--	1
1,3-Dichloropropane	ND		ug/l	2.0	--	1
1,1,1,2-Tetrachloroethane	ND		ug/l	1.0	--	1
Bromobenzene	ND		ug/l	2.0	--	1
n-Butylbenzene	ND		ug/l	2.0	--	1
sec-Butylbenzene	ND		ug/l	2.0	--	1
tert-Butylbenzene	ND		ug/l	2.0	--	1
o-Chlorotoluene	ND		ug/l	2.0	--	1
p-Chlorotoluene	ND		ug/l	2.0	--	1
1,2-Dibromo-3-chloropropane	ND		ug/l	2.0	--	1
Hexachlorobutadiene	ND		ug/l	0.60	--	1
Isopropylbenzene	ND		ug/l	2.0	--	1
p-Isopropyltoluene	ND		ug/l	2.0	--	1
Naphthalene	ND		ug/l	2.0	--	1
n-Propylbenzene	ND		ug/l	2.0	--	1
1,2,3-Trichlorobenzene	ND		ug/l	2.0	--	1
1,2,4-Trichlorobenzene	ND		ug/l	2.0	--	1
1,3,5-Trimethylbenzene	ND		ug/l	2.0	--	1
1,2,4-Trimethylbenzene	ND		ug/l	2.0	--	1

Project Name: NBHS IRA O&M **Lab Number:** L1512557

Project Number: 115058 **Report Date:** 06/12/15

SAMPLE RESULTS

Lab ID: L1512557-01 Date Collected: 06/04/15 10:00

Client ID: INFLUENT Date Received: 06/05/15

Sample Location: NEW BEDFORD, MA Field Prep: Not Specified

Parameter	Result	Qualifier	Units	RL	MDL	Dilution Factor
MCP Volatile Organics - Westborough Lab						
Ethyl ether	ND		ug/l	2.0	--	1
Isopropyl Ether	ND		ug/l	2.0	--	1
Ethyl-Tert-Butyl-Ether	ND		ug/l	2.0	--	1
Tertiary-Amyl Methyl Ether	ND		ug/l	2.0	--	1
1,4-Dioxane	ND		ug/l	250	--	1

Surrogate	% Recovery	Qualifier	Acceptance Criteria
1,2-Dichloroethane-d4	109		70-130
Toluene-d8	90		70-130
4-Bromofluorobenzene	93		70-130
Dibromofluoromethane	108		70-130

Project Name: NBHS IRA O&M
Project Number: 115058
Lab Number: L1512557
Report Date: 06/12/15

SAMPLE RESULTS

Lab ID: L1512557-02
Client ID: EFFLUENT
Sample Location: NEW BEDFORD, MA
Matrix: Water
Analytical Method: 97,8260C
Analytical Date: 06/12/15 07:25
Analyst: MM

Date Collected: 06/04/15 11:00
Date Received: 06/05/15
Field Prep: Not Specified

Parameter	Result	Qualifier	Units	RL	MDL	Dilution Factor
MCP Volatile Organics - Westborough Lab						
Methylene chloride	ND		ug/l	2.0	--	1
1,1-Dichloroethane	ND		ug/l	1.0	--	1
Chloroform	ND		ug/l	1.0	--	1
Carbon tetrachloride	ND		ug/l	1.0	--	1
1,2-Dichloropropane	ND		ug/l	1.0	--	1
Dibromochloromethane	ND		ug/l	1.0	--	1
1,1,2-Trichloroethane	ND		ug/l	1.0	--	1
Tetrachloroethene	ND		ug/l	1.0	--	1
Chlorobenzene	ND		ug/l	1.0	--	1
Trichlorofluoromethane	ND		ug/l	2.0	--	1
1,2-Dichloroethane	ND		ug/l	1.0	--	1
1,1,1-Trichloroethane	ND		ug/l	1.0	--	1
Bromodichloromethane	ND		ug/l	1.0	--	1
trans-1,3-Dichloropropene	ND		ug/l	0.50	--	1
cis-1,3-Dichloropropene	ND		ug/l	0.50	--	1
1,3-Dichloropropene, Total	ND		ug/l	0.50	--	1
1,1-Dichloropropene	ND		ug/l	2.0	--	1
Bromoform	ND		ug/l	2.0	--	1
1,1,2,2-Tetrachloroethane	ND		ug/l	1.0	--	1
Benzene	ND		ug/l	0.50	--	1
Toluene	ND		ug/l	1.0	--	1
Ethylbenzene	ND		ug/l	1.0	--	1
Chloromethane	ND		ug/l	2.0	--	1
Bromomethane	ND		ug/l	2.0	--	1
Vinyl chloride	ND		ug/l	1.0	--	1
Chloroethane	ND		ug/l	2.0	--	1
1,1-Dichloroethene	ND		ug/l	1.0	--	1
trans-1,2-Dichloroethene	25		ug/l	1.0	--	1
Trichloroethene	ND		ug/l	1.0	--	1
1,2-Dichlorobenzene	ND		ug/l	1.0	--	1

Project Name: NBHS IRA O&M **Lab Number:** L1512557

Project Number: 115058 **Report Date:** 06/12/15

SAMPLE RESULTS

Lab ID: L1512557-02 Date Collected: 06/04/15 11:00

Client ID: EFFLUENT Date Received: 06/05/15

Sample Location: NEW BEDFORD, MA Field Prep: Not Specified

Parameter	Result	Qualifier	Units	RL	MDL	Dilution Factor
MCP Volatile Organics - Westborough Lab						
1,3-Dichlorobenzene	ND		ug/l	1.0	--	1
1,4-Dichlorobenzene	ND		ug/l	1.0	--	1
Methyl tert butyl ether	ND		ug/l	2.0	--	1
p/m-Xylene	ND		ug/l	2.0	--	1
o-Xylene	ND		ug/l	1.0	--	1
Xylene (Total)	ND		ug/l	1.0	--	1
cis-1,2-Dichloroethene	27		ug/l	1.0	--	1
1,2-Dichloroethene (total)	52		ug/l	1.0	--	1
Dibromomethane	ND		ug/l	2.0	--	1
1,2,3-Trichloropropane	ND		ug/l	2.0	--	1
Styrene	ND		ug/l	1.0	--	1
Dichlorodifluoromethane	ND		ug/l	2.0	--	1
Acetone	ND		ug/l	5.0	--	1
Carbon disulfide	ND		ug/l	2.0	--	1
2-Butanone	ND		ug/l	5.0	--	1
4-Methyl-2-pentanone	ND		ug/l	5.0	--	1
2-Hexanone	ND		ug/l	5.0	--	1
Bromochloromethane	ND		ug/l	2.0	--	1
Tetrahydrofuran	ND		ug/l	2.0	--	1
2,2-Dichloropropane	ND		ug/l	2.0	--	1
1,2-Dibromoethane	ND		ug/l	2.0	--	1
1,3-Dichloropropane	ND		ug/l	2.0	--	1
1,1,1,2-Tetrachloroethane	ND		ug/l	1.0	--	1
Bromobenzene	ND		ug/l	2.0	--	1
n-Butylbenzene	ND		ug/l	2.0	--	1
sec-Butylbenzene	ND		ug/l	2.0	--	1
tert-Butylbenzene	ND		ug/l	2.0	--	1
o-Chlorotoluene	ND		ug/l	2.0	--	1
p-Chlorotoluene	ND		ug/l	2.0	--	1
1,2-Dibromo-3-chloropropane	ND		ug/l	2.0	--	1
Hexachlorobutadiene	ND		ug/l	0.60	--	1
Isopropylbenzene	ND		ug/l	2.0	--	1
p-Isopropyltoluene	ND		ug/l	2.0	--	1
Naphthalene	ND		ug/l	2.0	--	1
n-Propylbenzene	ND		ug/l	2.0	--	1
1,2,3-Trichlorobenzene	ND		ug/l	2.0	--	1
1,2,4-Trichlorobenzene	ND		ug/l	2.0	--	1
1,3,5-Trimethylbenzene	ND		ug/l	2.0	--	1
1,2,4-Trimethylbenzene	ND		ug/l	2.0	--	1

Project Name: NBHS IRA O&M **Lab Number:** L1512557

Project Number: 115058 **Report Date:** 06/12/15

SAMPLE RESULTS

Lab ID: L1512557-02 Date Collected: 06/04/15 11:00

Client ID: EFFLUENT Date Received: 06/05/15

Sample Location: NEW BEDFORD, MA Field Prep: Not Specified

Parameter	Result	Qualifier	Units	RL	MDL	Dilution Factor
MCP Volatile Organics - Westborough Lab						
Ethyl ether	ND		ug/l	2.0	--	1
Isopropyl Ether	ND		ug/l	2.0	--	1
Ethyl-Tert-Butyl-Ether	ND		ug/l	2.0	--	1
Tertiary-Amyl Methyl Ether	ND		ug/l	2.0	--	1
1,4-Dioxane	ND		ug/l	250	--	1

Surrogate	% Recovery	Qualifier	Acceptance Criteria
1,2-Dichloroethane-d4	106		70-130
Toluene-d8	93		70-130
4-Bromofluorobenzene	99		70-130
Dibromofluoromethane	104		70-130

Project Name: NBHS IRA O&M **Lab Number:** L1512557

Project Number: 115058 **Report Date:** 06/12/15

Method Blank Analysis
Batch Quality Control

Analytical Method: 97,8260C
Analytical Date: 06/12/15 06:20
Analyst: MM

Parameter	Result	Qualifier	Units	RL	MDL
MCP Volatile Organics - Westborough Lab for sample(s): 01-02 Batch: WG792969-3					
Methylene chloride	ND		ug/l	2.0	--
1,1-Dichloroethane	ND		ug/l	1.0	--
Chloroform	ND		ug/l	1.0	--
Carbon tetrachloride	ND		ug/l	1.0	--
1,2-Dichloropropane	ND		ug/l	1.0	--
Dibromochloromethane	ND		ug/l	1.0	--
1,1,2-Trichloroethane	ND		ug/l	1.0	--
Tetrachloroethene	ND		ug/l	1.0	--
Chlorobenzene	ND		ug/l	1.0	--
Trichlorofluoromethane	ND		ug/l	2.0	--
1,2-Dichloroethane	ND		ug/l	1.0	--
1,1,1-Trichloroethane	ND		ug/l	1.0	--
Bromodichloromethane	ND		ug/l	1.0	--
trans-1,3-Dichloropropene	ND		ug/l	0.50	--
cis-1,3-Dichloropropene	ND		ug/l	0.50	--
1,3-Dichloropropene, Total	ND		ug/l	0.50	--
1,1-Dichloropropene	ND		ug/l	2.0	--
Bromoform	ND		ug/l	2.0	--
1,1,2,2-Tetrachloroethane	ND		ug/l	1.0	--
Benzene	ND		ug/l	0.50	--
Toluene	ND		ug/l	1.0	--
Ethylbenzene	ND		ug/l	1.0	--
Chloromethane	ND		ug/l	2.0	--
Bromomethane	ND		ug/l	2.0	--
Vinyl chloride	ND		ug/l	1.0	--
Chloroethane	ND		ug/l	2.0	--
1,1-Dichloroethene	ND		ug/l	1.0	--
trans-1,2-Dichloroethene	ND		ug/l	1.0	--
Trichloroethene	ND		ug/l	1.0	--

Project Name: NBHS IRA O&M **Lab Number:** L1512557

Project Number: 115058 **Report Date:** 06/12/15

Method Blank Analysis
Batch Quality Control

Analytical Method: 97,8260C
Analytical Date: 06/12/15 06:20
Analyst: MM

Parameter	Result	Qualifier	Units	RL	MDL
MCP Volatile Organics - Westborough Lab for sample(s): 01-02 Batch: WG792969-3					
1,2-Dichlorobenzene	ND		ug/l	1.0	--
1,3-Dichlorobenzene	ND		ug/l	1.0	--
1,4-Dichlorobenzene	ND		ug/l	1.0	--
Methyl tert butyl ether	ND		ug/l	2.0	--
p/m-Xylene	ND		ug/l	2.0	--
o-Xylene	ND		ug/l	1.0	--
Xylene (Total)	ND		ug/l	1.0	--
cis-1,2-Dichloroethene	ND		ug/l	1.0	--
1,2-Dichloroethene (total)	ND		ug/l	1.0	--
Dibromomethane	ND		ug/l	2.0	--
1,2,3-Trichloropropane	ND		ug/l	2.0	--
Styrene	ND		ug/l	1.0	--
Dichlorodifluoromethane	ND		ug/l	2.0	--
Acetone	ND		ug/l	5.0	--
Carbon disulfide	ND		ug/l	2.0	--
2-Butanone	ND		ug/l	5.0	--
4-Methyl-2-pentanone	ND		ug/l	5.0	--
2-Hexanone	ND		ug/l	5.0	--
Bromochloromethane	ND		ug/l	2.0	--
Tetrahydrofuran	ND		ug/l	2.0	--
2,2-Dichloropropane	ND		ug/l	2.0	--
1,2-Dibromoethane	ND		ug/l	2.0	--
1,3-Dichloropropane	ND		ug/l	2.0	--
1,1,1,2-Tetrachloroethane	ND		ug/l	1.0	--
Bromobenzene	ND		ug/l	2.0	--
n-Butylbenzene	ND		ug/l	2.0	--
sec-Butylbenzene	ND		ug/l	2.0	--
tert-Butylbenzene	ND		ug/l	2.0	--
o-Chlorotoluene	ND		ug/l	2.0	--

Project Name: NBHS IRA O&M
Project Number: 115058
Lab Number: L1512557
Report Date: 06/12/15

Method Blank Analysis
Batch Quality Control

Analytical Method: 97,8260C
Analytical Date: 06/12/15 06:20
Analyst: MM

Parameter	Result	Qualifier	Units	RL	MDL
MCP Volatile Organics - Westborough Lab for sample(s): 01-02 Batch: WG792969-3					
p-Chlorotoluene	ND		ug/l	2.0	--
1,2-Dibromo-3-chloropropane	ND		ug/l	2.0	--
Hexachlorobutadiene	ND		ug/l	0.60	--
Isopropylbenzene	ND		ug/l	2.0	--
p-Isopropyltoluene	ND		ug/l	2.0	--
Naphthalene	ND		ug/l	2.0	--
n-Propylbenzene	ND		ug/l	2.0	--
1,2,3-Trichlorobenzene	ND		ug/l	2.0	--
1,2,4-Trichlorobenzene	ND		ug/l	2.0	--
1,3,5-Trimethylbenzene	ND		ug/l	2.0	--
1,2,4-Trimethylbenzene	ND		ug/l	2.0	--
Ethyl ether	ND		ug/l	2.0	--
Isopropyl Ether	ND		ug/l	2.0	--
Ethyl-Tert-Butyl-Ether	ND		ug/l	2.0	--
Tertiary-Amyl Methyl Ether	ND		ug/l	2.0	--
1,4-Dioxane	ND		ug/l	250	--

Surrogate	%Recovery	Qualifier	Acceptance Criteria
1,2-Dichloroethane-d4	101		70-130
Toluene-d8	93		70-130
4-Bromofluorobenzene	110		70-130
Dibromofluoromethane	102		70-130

Lab Control Sample Analysis
Batch Quality Control

Project Name: NBHS IRA O&M
Project Number: 115058

Lab Number: L1512557
Report Date: 06/12/15

Parameter	LCS %Recovery	Qual	LCSD %Recovery	Qual	%Recovery Limits	RPD	Qual	RPD Limits
MCP Volatile Organics - Westborough Lab Associated sample(s): 01-02 Batch: WG792969-1 WG792969-2								
Methylene chloride	93		81		70-130	14		20
1,1-Dichloroethane	106		102		70-130	4		20
Chloroform	107		104		70-130	3		20
Carbon tetrachloride	109		107		70-130	2		20
1,2-Dichloropropane	100		99		70-130	1		20
Dibromochloromethane	85		88		70-130	3		20
1,1,2-Trichloroethane	85		83		70-130	2		20
Tetrachloroethene	92		92		70-130	0		20
Chlorobenzene	95		94		70-130	1		20
Trichlorofluoromethane	111		104		70-130	7		20
1,2-Dichloroethane	106		106		70-130	0		20
1,1,1-Trichloroethane	111		106		70-130	5		20
Bromodichloromethane	106		100		70-130	6		20
trans-1,3-Dichloropropene	79		83		70-130	5		20
cis-1,3-Dichloropropene	95		96		70-130	1		20
1,1-Dichloropropene	107		102		70-130	5		20
Bromoform	79		86		70-130	8		20
1,1,2,2-Tetrachloroethane	80		91		70-130	13		20
Benzene	104		100		70-130	4		20
Toluene	90		92		70-130	2		20
Ethylbenzene	96		95		70-130	1		20

Lab Control Sample Analysis
Batch Quality Control

Project Name: NBHS IRA O&M
Project Number: 115058

Lab Number: L1512557
Report Date: 06/12/15

Parameter	LCS %Recovery	Qual	LCSD %Recovery	Qual	%Recovery Limits	RPD	Qual	RPD Limits
MCP Volatile Organics - Westborough Lab Associated sample(s): 01-02 Batch: WG792969-1 WG792969-2								
Chloromethane	92		90		70-130	2		20
Bromomethane	104		88		70-130	17		20
Vinyl chloride	90		75		70-130	18		20
Chloroethane	91		84		70-130	8		20
1,1-Dichloroethene	92		91		70-130	1		20
trans-1,2-Dichloroethene	85		97		70-130	13		20
Trichloroethene	106		101		70-130	5		20
1,2-Dichlorobenzene	91		99		70-130	8		20
1,3-Dichlorobenzene	91		83		70-130	9		20
1,4-Dichlorobenzene	92		98		70-130	6		20
Methyl tert butyl ether	78		87		70-130	11		20
p/m-Xylene	97		97		70-130	0		20
o-Xylene	95		96		70-130	1		20
cis-1,2-Dichloroethene	107		101		70-130	6		20
Dibromomethane	102		102		70-130	0		20
1,2,3-Trichloropropane	81		82		70-130	1		20
Styrene	96		97		70-130	1		20
Dichlorodifluoromethane	110		105		70-130	5		20
Acetone	75		70		70-130	7		20
Carbon disulfide	80		81		70-130	1		20
2-Butanone	84		91		70-130	8		20

Lab Control Sample Analysis
Batch Quality Control

Project Name: NBHS IRA O&M
Project Number: 115058

Lab Number: L1512557
Report Date: 06/12/15

Parameter	LCS %Recovery	Qual	LCSD %Recovery	Qual	%Recovery Limits	RPD	Qual	RPD Limits
MCP Volatile Organics - Westborough Lab Associated sample(s): 01-02 Batch: WG792969-1 WG792969-2								
4-Methyl-2-pentanone	73		85		70-130	15		20
2-Hexanone	81		85		70-130	5		20
Bromochloromethane	106		106		70-130	0		20
Tetrahydrofuran	84		86		70-130	2		20
2,2-Dichloropropane	110		104		70-130	6		20
1,2-Dibromoethane	84		88		70-130	5		20
1,3-Dichloropropane	88		87		70-130	1		20
1,1,1,2-Tetrachloroethane	96		95		70-130	1		20
Bromobenzene	92		98		70-130	6		20
n-Butylbenzene	86		94		70-130	9		20
sec-Butylbenzene	84		91		70-130	8		20
tert-Butylbenzene	86		82		70-130	5		20
o-Chlorotoluene	91		97		70-130	6		20
p-Chlorotoluene	81		91		70-130	12		20
1,2-Dibromo-3-chloropropane	78		91		70-130	15		20
Hexachlorobutadiene	81		99		70-130	20		20
Isopropylbenzene	94		98		70-130	4		20
p-Isopropyltoluene	86		78		70-130	10		20
Naphthalene	75		86		70-130	14		20
n-Propylbenzene	91		98		70-130	7		20
1,2,3-Trichlorobenzene	78		87		70-130	11		20

Lab Control Sample Analysis
Batch Quality Control

Project Name: NBHS IRA O&M
Project Number: 115058

Lab Number: L1512557
Report Date: 06/12/15

Parameter	LCS %Recovery	Qual	LCSD %Recovery	Qual	%Recovery Limits	RPD	Qual	RPD Limits
MCP Volatile Organics - Westborough Lab Associated sample(s): 01-02 Batch: WG792969-1 WG792969-2								
1,2,4-Trichlorobenzene	78		91		70-130	15		20
1,3,5-Trimethylbenzene	88		95		70-130	8		20
1,2,4-Trimethylbenzene	90		92		70-130	2		20
Ethyl ether	81		81		70-130	0		20
Isopropyl Ether	102		99		70-130	3		20
Ethyl-Tert-Butyl-Ether	92		92		70-130	0		20
Tertiary-Amyl Methyl Ether	90		88		70-130	2		20
1,4-Dioxane	76		73		70-130	4		20

Surrogate	LCS %Recovery	Qual	LCSD %Recovery	Qual	Acceptance Criteria
1,2-Dichloroethane-d4	102		101		70-130
Toluene-d8	90		91		70-130
4-Bromofluorobenzene	92		98		70-130
Dibromofluoromethane	108		104		70-130

PCBS

Project Name: NBHS IRA O&M
Project Number: 115058

Lab Number: L1512557
Report Date: 06/12/15

SAMPLE RESULTS

Lab ID:	L1512557-01	D	Date Collected:	06/04/15 10:00
Client ID:	INFLUENT		Date Received:	06/05/15
Sample Location:	NEW BEDFORD, MA		Field Prep:	Not Specified
Matrix:	Water		Extraction Method:	EPA 3510C
Analytical Method:	97,8082		Extraction Date:	06/10/15 13:51
Analytical Date:	06/12/15 12:24		Cleanup Method:	EPA 3665A
Analyst:	JT		Cleanup Date:	06/10/15
			Cleanup Method:	EPA 3660B
			Cleanup Date:	06/10/15

Parameter	Result	Qualifier	Units	RL	MDL	Dilution Factor	Column
MCP Polychlorinated Biphenyls - Westborough Lab							
Aroclor 1016	ND		ug/l	1.25	--	5	A
Aroclor 1221	ND		ug/l	1.25	--	5	A
Aroclor 1232	ND		ug/l	1.25	--	5	A
Aroclor 1242	2.44		ug/l	1.25	--	5	A
Aroclor 1248	ND		ug/l	1.25	--	5	A
Aroclor 1254	17.7		ug/l	1.25	--	5	A
Aroclor 1260	ND		ug/l	1.25	--	5	A
Aroclor 1262	ND		ug/l	1.25	--	5	A
Aroclor 1268	ND		ug/l	1.25	--	5	A
PCBs, Total	20.1		ug/l	1.25	--	5	A

Surrogate	% Recovery	Qualifier	Acceptance Criteria	Column
2,4,5,6-Tetrachloro-m-xylene	67		30-150	A
Decachlorobiphenyl	76		30-150	A
2,4,5,6-Tetrachloro-m-xylene	68		30-150	B
Decachlorobiphenyl	59		30-150	B

Project Name: NBHS IRA O&M
Project Number: 115058
Lab Number: L1512557
Report Date: 06/12/15

SAMPLE RESULTS

Lab ID:	L1512557-02	Date Collected:	06/04/15 11:00
Client ID:	EFFLUENT	Date Received:	06/05/15
Sample Location:	NEW BEDFORD, MA	Field Prep:	Not Specified
Matrix:	Water	Extraction Method:	EPA 3510C
Analytical Method:	97,8082	Extraction Date:	06/10/15 13:51
Analytical Date:	06/10/15 22:56	Cleanup Method:	EPA 3665A
Analyst:	JT	Cleanup Date:	06/10/15
		Cleanup Method:	EPA 3660B
		Cleanup Date:	06/10/15

Parameter	Result	Qualifier	Units	RL	MDL	Dilution Factor	Column
MCP Polychlorinated Biphenyls - Westborough Lab							
Aroclor 1016	ND		ug/l	0.250	--	1	A
Aroclor 1221	ND		ug/l	0.250	--	1	A
Aroclor 1232	ND		ug/l	0.250	--	1	A
Aroclor 1242	ND		ug/l	0.250	--	1	A
Aroclor 1248	ND		ug/l	0.250	--	1	A
Aroclor 1254	ND		ug/l	0.250	--	1	A
Aroclor 1260	ND		ug/l	0.250	--	1	A
Aroclor 1262	ND		ug/l	0.250	--	1	A
Aroclor 1268	ND		ug/l	0.250	--	1	A
PCBs, Total	ND		ug/l	0.250	--	1	A

Surrogate	% Recovery	Qualifier	Acceptance Criteria	Column
2,4,5,6-Tetrachloro-m-xylene	56		30-150	A
Decachlorobiphenyl	62		30-150	A
2,4,5,6-Tetrachloro-m-xylene	59		30-150	B
Decachlorobiphenyl	64		30-150	B

Project Name: NBHS IRA O&M

Project Number: 115058

Lab Number: L1512557

Report Date: 06/12/15

Method Blank Analysis
Batch Quality Control

Analytical Method: 97,8082A
Analytical Date: 06/11/15 00:33
Analyst: JT

Extraction Method: EPA 3510C
Extraction Date: 06/10/15 13:51
Cleanup Method: EPA 3665A
Cleanup Date: 06/10/15
Cleanup Method: EPA 3660B
Cleanup Date: 06/10/15

Parameter	Result	Qualifier	Units	RL	MDL	Column
MCP Polychlorinated Biphenyls - Westborough Lab for sample(s): 01-02 Batch: WG792344-1						
Aroclor 1016	ND		ug/l	0.250	--	A
Aroclor 1221	ND		ug/l	0.250	--	A
Aroclor 1232	ND		ug/l	0.250	--	A
Aroclor 1242	ND		ug/l	0.250	--	A
Aroclor 1248	ND		ug/l	0.250	--	A
Aroclor 1254	ND		ug/l	0.250	--	A
Aroclor 1260	ND		ug/l	0.250	--	A
Aroclor 1262	ND		ug/l	0.250	--	A
Aroclor 1268	ND		ug/l	0.250	--	A
PCBs, Total	ND		ug/l	0.250	--	A

Surrogate	%Recovery	Qualifier	Acceptance Criteria	Column
2,4,5,6-Tetrachloro-m-xylene	58		30-150	A
Decachlorobiphenyl	64		30-150	A
2,4,5,6-Tetrachloro-m-xylene	60		30-150	B
Decachlorobiphenyl	66		30-150	B

Lab Control Sample Analysis
Batch Quality Control

Project Name: NBHS IRA O&M
Project Number: 115058

Lab Number: L1512557
Report Date: 06/12/15

Parameter	LCS %Recovery	Qual	LCSD %Recovery	Qual	%Recovery Limits	RPD	Qual	RPD Limits	Column
MCP Polychlorinated Biphenyls - Westborough Lab Associated sample(s): 01-02 Batch: WG792344-2 WG792344-3									
Aroclor 1016	78		65		40-140	19		20	A
Aroclor 1260	71		61		40-140	15		20	A

Surrogate	LCS %Recovery	Qual	LCSD %Recovery	Qual	Acceptance Criteria	Column
2,4,5,6-Tetrachloro-m-xylene	67		55		30-150	A
Decachlorobiphenyl	76		66		30-150	A
2,4,5,6-Tetrachloro-m-xylene	70		56		30-150	B
Decachlorobiphenyl	79		66		30-150	B

Project Name: NBHS IRA O&M
Project Number: 115058

Lab Number: L1512557
Report Date: 06/12/15

Sample Receipt and Container Information

Were project specific reporting limits specified? YES

Reagent H2O Preserved Vials Frozen on: NA

Cooler Information Custody Seal

Cooler	
A	Absent

Container Information

Container ID	Container Type	Cooler	pH	Temp deg C	Pres	Seal	Analysis(*)
L1512557-01A	Vial HCl preserved	A	N/A	2.9	Y	Absent	MCP-8260-10(14)
L1512557-01B	Vial HCl preserved	A	N/A	2.9	Y	Absent	MCP-8260-10(14)
L1512557-01C	Vial HCl preserved	A	N/A	2.9	Y	Absent	MCP-8260-10(14)
L1512557-01D	Amber 1000ml unpreserved	A	8	2.9	Y	Absent	MCP-8082-10(365)
L1512557-01E	Amber 1000ml unpreserved	A	8	2.9	Y	Absent	MCP-8082-10(365)
L1512557-02A	Vial HCl preserved	A	N/A	2.9	Y	Absent	MCP-8260-10(14)
L1512557-02B	Vial HCl preserved	A	N/A	2.9	Y	Absent	MCP-8260-10(14)
L1512557-02C	Vial HCl preserved	A	N/A	2.9	Y	Absent	MCP-8260-10(14)
L1512557-02D	Amber 1000ml unpreserved	A	8	2.9	Y	Absent	MCP-8082-10(365)
L1512557-02E	Amber 1000ml unpreserved	A	8	2.9	Y	Absent	MCP-8082-10(365)

*Values in parentheses indicate holding time in days

Project Name:	NBHS IRA O&M	**Lab Number:**	L1512557
Project Number:	115058	**Report Date:**	06/12/15

GLOSSARY

Acronyms

EDL	- Estimated Detection Limit: This value represents the level to which target analyte concentrations are reported as estimated values, when those target analyte concentrations are quantified below the reporting limit (RL). The EDL includes any adjustments from dilutions, concentrations or moisture content, where applicable. The use of EDLs is specific to the analysis of PAHs using Solid-Phase Microextraction (SPME).
EPA	- Environmental Protection Agency.
LCS	- Laboratory Control Sample: A sample matrix, free from the analytes of interest, spiked with verified known amounts of analytes or a material containing known and verified amounts of analytes.
LCSD	- Laboratory Control Sample Duplicate: Refer to LCS.
LFB	- Laboratory Fortified Blank: A sample matrix, free from the analytes of interest, spiked with verified known amounts of analytes or a material containing known and verified amounts of analytes.
MDL	- Method Detection Limit: This value represents the level to which target analyte concentrations are reported as estimated values, when those target analyte concentrations are quantified below the reporting limit (RL). The MDL includes any adjustments from dilutions, concentrations or moisture content, where applicable.
MS	- Matrix Spike Sample: A sample prepared by adding a known mass of target analyte to a specified amount of matrix sample for which an independent estimate of target analyte concentration is available.
MSD	- Matrix Spike Sample Duplicate: Refer to MS.
NA	- Not Applicable.
NC	- Not Calculated: Term is utilized when one or more of the results utilized in the calculation are non-detect at the parameter's reporting unit.
NI	- Not Ignitable.
NP	- Non-Plastic: Term is utilized for the analysis of Atterberg Limits in soil.
RL	- Reporting Limit: The value at which an instrument can accurately measure an analyte at a specific concentration. The RL includes any adjustments from dilutions, concentrations or moisture content, where applicable.
RPD	- Relative Percent Difference: The results from matrix and/or matrix spike duplicates are primarily designed to assess the precision of analytical results in a given matrix and are expressed as relative percent difference (RPD). Values which are less than five times the reporting limit for any individual parameter are evaluated by utilizing the absolute difference between the values; although the RPD value will be provided in the report.
SRM	- Standard Reference Material: A reference sample of a known or certified value that is of the same or similar matrix as the associated field samples.

Footnotes

1	- The reference for this analyte should be considered modified since this analyte is absent from the target analyte list of the original method.

Terms

Total: With respect to Organic analyses, a 'Total' result is defined as the summation of results for individual isomers or Aroclors. If a 'Total' result is requested, the results of its individual components will also be reported. This is applicable to 'Total' results for methods 8260, 8081 and 8082.

Analytical Method: Both the document from which the method originates and the analytical reference method. (Example: EPA 8260B is shown as 1,8260B.) The codes for the reference method documents are provided in the References section of the Addendum.

Data Qualifiers

A	- Spectra identified as "Aldol Condensation Product".
B	- The analyte was detected above the reporting limit in the associated method blank. Flag only applies to associated field samples that have detectable concentrations of the analyte at less than ten times (10x) the concentration found in the blank. For MCP-related projects, flag only applies to associated field samples that have detectable concentrations of the analyte at less than ten times (10x) the concentration found in the blank. For DOD-related projects, flag only applies to associated field samples that have detectable concentrations of the analyte at less than ten times (10x) the concentration found in the blank AND the analyte was detected above one-half the reporting limit (or above the reporting limit for common lab contaminants) in the associated method blank. For NJ-Air-related projects, flag only applies to associated field samples that have detectable concentrations of the analyte above the reporting limit. For NJ-related projects (excluding Air), flag only applies to associated field samples that have detectable concentrations of the analyte, which was detected above the reporting limit in the associated method blank or above five times the reporting limit for common lab contaminants (Phthalates, Acetone, Methylene Chloride, 2-Butanone).
C	- Co-elution: The target analyte co-elutes with a known lab standard (i.e. surrogate, internal standards, etc.) for co-extracted analyses.
D	- Concentration of analyte was quantified from diluted analysis. Flag only applies to field samples that have detectable concentrations of the analyte.

Report Format: Data Usability Report

Project Name:	NBHS IRA O&M	**Lab Number:**	L1512557
Project Number:	115058	**Report Date:**	06/12/15

Data Qualifiers

E - Concentration of analyte exceeds the range of the calibration curve and/or linear range of the instrument.

G - The concentration may be biased high due to matrix interferences (i.e, co-elution) with non-target compound(s). The result should be considered estimated.

H - The analysis of pH was performed beyond the regulatory-required holding time of 15 minutes from the time of sample collection.

I - The lower value for the two columns has been reported due to obvious interference.

M - Reporting Limit (RL) exceeds the MCP CAM Reporting Limit for this analyte.

NJ - Presumptive evidence of compound. This represents an estimated concentration for Tentatively Identified Compounds (TICs), where the identification is based on a mass spectral library search.

P - The RPD between the results for the two columns exceeds the method-specified criteria.

Q - The quality control sample exceeds the associated acceptance criteria. For DOD-related projects, LCS and/or Continuing Calibration Standard exceedences are also qualified on all associated sample results. Note: This flag is not applicable for matrix spike recoveries when the sample concentration is greater than 4x the spike added or for batch duplicate RPD when the sample concentrations are less than 5x the RL. (Metals only.)

R - Analytical results are from sample re-analysis.

RE - Analytical results are from sample re-extraction.

S - Analytical results are from modified screening analysis.

J - Estimated value. This represents an estimated concentration for Tentatively Identified Compounds (TICs).

ND - Not detected at the reporting limit (RL) for the sample.

Report Format: Data Usability Report

REFERENCES

97 EPA Test Methods (SW-846) with QC Requirements & Performance Standards for the Analysis of EPA SW-846 Methods under the Massachusetts Contingency Plan, WSC-CAM-IIA, IIB, IIIA, IIIB, IIIC, IIID, VA, VB, VC, VIA, VIB, VIIIA and VIIIB, July 2010.

LIMITATION OF LIABILITIES

Alpha Analytical performs services with reasonable care and diligence normal to the analytical testing laboratory industry. In the event of an error, the sole and exclusive responsibility of Alpha Analytical shall be to re-perform the work at it's own expense. In no event shall Alpha Analytical be held liable for any incidental, consequential or special damages, including but not limited to, damages in any way connected with the use of, interpretation of, information or analysis provided by Alpha Analytical.

We strongly urge our clients to comply with EPA protocol regarding sample volume, preservation, cooling, containers, sampling procedures, holding time and splitting of samples in the field.

Certification Information

Last revised December 16, 2014

The following analytes are not included in our NELAP Scope of Accreditation:

Westborough Facility
EPA 524.2: Acetone, 2-Butanone (Methyl ethyl ketone (MEK)), Tert-butyl alcohol, 2-Hexanone, Tetrahydrofuran, 1,3,5-Trichlorobenzene, 4-Methyl-2-pentanone (MIBK), Carbon disulfide, Diethyl ether.
EPA 8260C: 1,2,4,5-Tetramethylbenzene, 4-Ethyltoluene, Iodomethane (methyl iodide), Methyl methacrylate, Azobenzene.
EPA 8270D: 1-Methylnaphthalene, Dimethylnaphthalene,1,4-Diphenylhydrazine.
EPA 625: 4-Chloroaniline, 4-Methylphenol.
SM4500: Soil: Total Phosphorus, TKN, NO2, NO3.
EPA 9071: Total Petroleum Hydrocarbons, Oil & Grease.

Mansfield Facility
EPA 8270D: Biphenyl.
EPA 2540D: TSS
EPA TO-15: Halothane, 2,4,4-Trimethyl-2-pentene, 2,4,4-Trimethyl-1-pentene, Thiophene, 2-Methylthiophene, 3-Methylthiophene, 2-Ethylthiophene, 1,2,3-Trimethylbenzene, Indan, Indene, 1,2,4,5-Tetramethylbenzene, Benzothiophene, 1-Methylnaphthalene.

The following analytes are included in our Massachusetts DEP Scope of Accreditation, Westborough Facility:

Drinking Water
EPA 200.8: Sb,As,Ba,Be,Cd,Cr,Cu,Pb,Ni,Se,Tl; **EPA 200.7**: Ba,Be,Ca,Cd,Cr,Cu,Na; **EPA 245.1:** Mercury;
EPA 300.0: Nitrate-N, Fluoride, Sulfate; **EPA 353.2**: Nitrate-N, Nitrite-N; **SM4500NO3-F**: Nitrate-N, Nitrite-N; **SM4500F-C, SM4500CN-CE, EPA 180.1, SM2130B, SM4500Cl-D, SM2320B, SM2540C, SM4500H-B**
EPA 332: Perchlorate.
Microbiology: **SM9215B; SM9223-P/A, SM9223B-Colilert-QT, Enterolert-QT.**

Non-Potable Water
EPA 200.8: Al,Sb,As,Be,Cd,Cr,Cu,Pb,Mn,Ni,Se,Ag,Tl,Zn;
EPA 200.7: Al,Sb,As,Be,Cd,Ca,Cr,Co,Cu,Fe,Pb,Mg,Mn,Mo,Ni,K,Se,Ag,Na,Sr,Ti,Tl,V,Zn;
EPA 245.1, SM4500H,B, EPA 120.1, SM2510B, SM2540C, SM2340B, SM2320B, SM4500CL-E, SM4500F-BC, SM426C, SM4500NH3-BH, **EPA 350.1**: Ammonia-N, **LACHAT 10-107-06-1-B**: Ammonia-N, **SM4500NO3-F,**
EPA 353.2: Nitrate-N**, SM4500NH3-BC-NES, EPA 351.1, SM4500P-E, SM4500P-B, E, SM5220D, EPA 410.4, SM5210B, SM5310C, SM4500CL-D, EPA 1664, SM14 510AC, EPA 420.1, SM4500-CN-CE, SM2540D.**
EPA 624: Volatile Halocarbons & Aromatics,
EPA 608: Chlordane, Toxaphene, Aldrin, alpha-BHC, beta-BHC, gamma-BHC, delta-BHC, Dieldrin, DDD, DDE, DDT, Endosulfan I, Endosulfan II, Endosulfan sulfate, Endrin, Endrin Aldehyde, Heptachlor, Heptachlor Epoxide, PCBs
EPA 625: SVOC (Acid/Base/Neutral Extractables), **EPA 600/4-81-045**: PCB-Oil.
Microbiology: **SM9223B-Colilert-QT; Enterolert-QT, SM9222D-MF**.

For a complete listing of analytes and methods, please contact your Alpha Project Manager.

CHAIN OF CUSTODY

PAGE 1 OF 1

Date Rec'd in Lab: 6-5-15

ALPHA Job #: L1512557

ALPHA ANALYTICAL
WESTBORO, MA TEL: 508-898-9220 FAX: 508-898-9193
MANSFIELD, MA TEL: 508-822-9300 FAX: 508-822-3288

Client Information

Client: TRC
Address: 650 SUFFOLK ST
LOWELL MA.
Phone: 978-970-5600
Fax:
Email: DSULLIVAN@TRCSOLUTIONS.COM
☐ These samples have been previously analyzed by Alpha

Project Information

Project Name: NBHS IRA O&M
Project Location: NEW BEDFORD MA
Project #: 115058
Project Manager: DAVID SULLIVAN
ALPHA Quote #:

Turn-Around Time

☑ Standard ☐ RUSH (only confirmed if pre-approved!)
Date Due: Time:

Report Information - Data Deliverables

☐ FAX ☑ EMAIL
☑ ADEx ☐ Add'l Deliverables

Billing Information

☐ Same as Client info PO #: C115058

Regulatory Requirements/Report Limits

State /Fed Program MCP Criteria

MA MCP PRESUMPTIVE CERTAINTY --- CT REASONABLE CONFIDENCE PROTO

☑ Yes ☐ No Are MCP Analytical Methods Required?
☐ Yes ☐ No Is Matrix Spike (MS) Required on this SDG? (If yes see note in Comments)
☐ Yes ☐ No Are CT RCP (Reasonable Confidence Protocols) Required?

Other Project Specific Requirements/Comments/Detection Limits:
If MS is required , indicate in Sample Specific Comments which samples and what tests MS to be performed.
(Note: All ***CAM*** methods for inorganic analyses require MS every 20 soil samples)

ANALYSIS: VOCs 8260 | PCBs

SAMPLE HANDLING
Filtration
☐ Done
☐ Not needed
☐ Lab to do
Preservation
☐ Lab to do
(Please specify below)

ALPHA Lab ID (Lab Use Only)	Sample ID	Collection Date	Collection Time	Sample Matrix	Sampler's Initials	VOCs 8260	PCBs	Sample Specific Comments	TOTAL # BOTTLES
12557-01	INFLUENT	6/4/15	10:00	I	JF	✓	✓		
02	EFFLUENT	6/4/15	11:00	E	JF	✓	✓		

Container Type	AV	A
Preservative	B	A

PLEASE ANSWER QUESTIONS ABOVE!

IS YOUR PROJECT MA MCP *or* CT RCP?

Relinquished By:	Date/Time	Received By:	Date/Time
[signature]	6/5/15	[signature]	6/5/15 17:30
[signature]	6/5/15 19:10	[signature]	6/5/15 19:10
[signature]	6/5/15 1959	[signature]	6-5-15 1959

Please print clearly, legibly and completely. Samples can not be logged in and turnaround time clock will not start until any ambiguities are resolved. All samples submitted are subject to Alpha's Terms and Conditions. See reverse side.

FORM NO: 01-01 (rev. 18-Jan-2010)

7A
Volatile Organics CONTINUING CALIBRATION CHECK

Lab Name: Alpha Analytical Labs

SDG No.: L1512557

Instrument ID: Jack.i Calibration Date: 12-JUN-2015 Time: 04:42

Lab File ID: 0611A03 Init. Calib. Date(s): 11-MAY-2 12-MAY-2

Sample No: 8260 CCAL Init. Calib. Times : 20:57 00:16

Compound	RRF	RRF	MIN RRF	%D	MAX %D	
dichlorodifluoromethane	.58843	.64884	.1	10	20	
chloromethane	1.0530	.96941	.1	-8	20	
vinyl chloride	.86928	.77834	.1	-10	20	
bromomethane	.30223	.3136	.1	4	20	
chloroethane	.42791	.38856	.1	-9	20	
trichlorofluoromethane	.82317	.9128	.1	11	20	
ethyl ether	.32914	.26645	.05	-19	20	
1,1,-dichloroethene	.5556	.50964	.1	-8	20	
carbon disulfide	1.6563	1.3250	.1	-20	20	F
freon-113	.58573	.55706	.1	-5	20	
iodomethane	100	43.355	.05	-57	20	F
acrolein	.09716	.06467	.05	-33	20	F
methylene chloride	.61825	.57267	.1	-7	20	
acetone	100	74.663	.1	-25	20	F
trans-1,2-dichloroethene	.68282	.57766	.1	-15	20	
methyl acetate	.47848	.35136	.1	-27	20	F
methyl tert butyl ether	1.7827	1.3862	.1	-22	20	F
tert butyl alcohol	.05723	.04188	.05	-27	20	F
Diisopropyl Ether	3.0977	3.1563	.01	2	20	
1,1-dichloroethane	1.3399	1.4166	.2	6	20	
acrylonitrile	.23149	.20084	.05	-13	20	
Halothane	.52508	.55007	.05	5	20	
Ethyl-Tert-Butyl-Ether	2.4935	2.2981	.05	-8	20	
vinyl acetate	1.7112	1.9344	.05	13	20	
cis-1,2-dichloroethene	.75723	.81105	.1	7	20	
2,2-dichloropropane	1.0157	1.1125	.05	10	20	
cyclohexane	1.5446	1.5915	.01	3	30	
bromochloromethane	.34583	.36761	.05	6	20	
chloroform	1.2221	1.3119	.2	7	20	
carbontetrachloride	.92525	1.0115	.1	9	20	
tetrahydrofuran	.2492	.20966	.05	-16	20	
ethyl acetate	.67261	.59336	.05	-12	20	
1,1,1-trichloroethane	1.0989	1.2204	.1	11	20	
1,1-dichloropropene	1.0100	1.0830	.05	7	20	
2-butanone	100	84.540	.1	-15	20	
benzene	2.9223	3.0398	.5	4	20	
Tertiary-Amyl Methyl Ether	1.8698	1.6782	.05	-10	20	
1,2-dichloroethane	.96888	1.0321	.1	7	20	

FORM VII MCP-8260-10

7A
CONTINUING CALIBRATION CHECK

Lab Name: Alpha Analytical Labs

SDG No.: L1512557

Instrument ID: Jack.i Calibration Date: 12-JUN-2015 Time: 04:42

Lab File ID: 0611A03 Init. Calib. Date(s): 11-MAY-2 12-MAY-2

Sample No: 8260 CCAL Init. Calib. Times : 20:57 00:16

Compound	$\overline{RRF}$	RRF	MIN RRF	%D	MAX %D	
methyl cyclohexane	1.3419	1.3715	.01	2	30	
trichloroethene	.76446	.81404	.2	6	20	
dibromomethane	.37289	.38232	.05	3	20	
1,2-dichloropropane	.80011	.80157	.1	0	20	
bromodichloromethane	1.0528	1.1122	.2	6	20	
1,4-dioxane	.00573	.00437	.05	-24	20	F
2-chloroethylvinyl ether	.43076	.32601	.05	-24	20	F
cis-1,3-dichloropropene	1.1377	1.0764	.2	-5	20	
toluene	2.4800	2.2397	.4	-10	20	
tetrachloroethene	1.0494	.95985	.2	-9	20	
4-methyl-2-pentanone	.23238	.17042	.1	-27	20	F
trans-1,3-dichloropropene	1.2144	.96167	.1	-21	20	F
1,1,2-trichloroethane	.61719	.52347	.1	-15	20	
ethyl-methacrylate	1.0457	.67555	.01	-35	30	F
chlorodibromomethane	.81047	.68878	.1	-15	20	
1,3-dichloropropane	1.2314	1.0800	.05	-12	20	
1,2-dibromoethane	.68862	.57793	.1	-16	20	
2-hexanone	.56498	.45782	.1	-19	20	
chlorobenzene	2.7330	2.5947	.5	-5	20	
ethyl benzene	4.7795	4.5639	.1	-5	20	
1,1,1,2-tetrachloroethane	.94794	.91416	.05	-4	20	
p/m xylene	1.8329	1.7706	.1	-3	20	
o xylene	1.7446	1.6546	.3	-5	20	
bromoform	.84401	.66606	.1	-21	20	F
styrene	2.9210	2.8038	.3	-4	20	
isopropylbenzene	10.431	9.7504	.1	-7	20	
bromobenzene	2.0646	1.9094	.05	-8	20	
1,4-dichlorobutane	2.7968	2.2004	.01	-21	30	
n-propylbenzene	10.671	9.6735	.05	-9	20	
1,1,2,2,-tetrachloroethane	1.5242	1.2247	.3	-20	20	
4-ethyltoluene	9.5080	8.4808	.05	-11	20	
2-chlorotoluene	7.0887	6.4467	.05	-9	20	
1,2,3-trichloropropane	1.2494	1.0097	.05	-19	20	
1,3,5-trimethybenzene	7.4613	6.5659	.05	-12	20	
trans-1,4-dichloro-2-butene	.55286	.4137	.05	-25	20	F
4-chorotoluene	6.2946	5.0756	.05	-19	20	
tert-butylbenzene	6.5652	5.6658	.05	-14	20	
1,2,4-trimethylbenzene	7.2110	6.4556	.05	-10	20	

FORM VII MCP-8260-10

7A
CONTINUING CALIBRATION CHECK

Lab Name: Alpha Analytical Labs

SDG No.: L1512557

Instrument ID: Jack.i Calibration Date: 12-JUN-2015 Time: 04:42

Lab File ID: 0611A03 Init. Calib. Date(s): 11-MAY-2 12-MAY-2

Sample No: 8260 CCAL Init. Calib. Times : 20:57 00:16

Compound	$\overline{RRF}$	RRF	MIN RRF	%D	MAX %D	
sec-butylbenzene	9.9203	8.3339	.01	-16	20	
p-isopropyltoluene	8.0579	6.9005	.05	-14	20	
1,3-dichlorobenzene	4.1677	3.8009	.6	-9	20	
1,4-dichlorobenzene	4.0812	3.7639	.5	-8	20	
p-diethylbenzene	4.7920	3.9346	.05	-18	20	
n-butylbenzene	6.9701	5.9850	.05	-14	20	
1,2-dichlorobenzene	3.6304	3.3190	.4	-9	20	
1,2,4,5-tetramethylbenzene	6.3564	5.2163	.05	-18	20	
1,2-dibromo-3-chloropropane	.24688	.19329	.05	-22	20	F
1,3,5-trichlorobenzene	1.0636	1.0816	.05	2	20	
1,2,4-trichlorobenzene	2.0679	1.6169	.2	-22	20	F
hexachlorobutadiene	.80088	.64877	.05	-19	20	
naphthalene	4.3054	3.2316	.05	-25	20	F
1,2,3-trichlorobenzene	1.7358	1.3606	.05	-22	20	F
dibromofluoromethane	.23719	.25578	.05	8	20	
1,2-dichloroethane-d4	.30228	.3094	.05	2	20	
toluene-d8	1.2320	1.1071	.01	-10	20	
4-bromofluorobenzene	.88375	.81472	.05	-8	20	

FORM VII MCP-8260-10

ANALYTICAL REPORT

Lab Number:	L1517795
Client:	TRC Environmental Consultants Wannalancit Mills 650 Suffolk Street Lowell, MA 01854
ATTN:	David Sullivan
Phone:	(978) 656-3565
Project Name:	NBHS
Project Number:	115058
Report Date:	08/06/15

The original project report/data package is held by Alpha Analytical. This report/data package is paginated and should be reproduced only in its entirety. Alpha Analytical holds no responsibility for results and/or data that are not consistent with the original.

Certifications & Approvals: MA (M-MA086), NY (11148), CT (PH-0574), NH (2003), NJ NELAP (MA935), RI (LAO00065), ME (MA00086), PA (68-03671), VA (460195), MD (348), IL (200077), NC (666), TX (T104704476), DOD (L2217), USDA (Permit #P-330-11-00240).

Eight Walkup Drive, Westborough, MA 01581-1019
508-898-9220 (Fax) 508-898-9193 800-624-9220 - www.alphalab.com

Project Name: NBHS
Project Number: 115058

Lab Number: L1517795
Report Date: 08/06/15

Alpha Sample ID	Client ID	Matrix	Sample Location	Collection Date/Time	Receive Date
L1517795-01	INFLUENT-TANK	WATER	NEW BEDFORD, MA	07/30/15 11:15	07/30/15
L1517795-02	EFFLUENT-SP7	WATER	NEW BEDFORD, MA	07/30/15 10:45	07/30/15

Project Name: NBHS **Lab Number:** L1517795

Project Number: 115058 **Report Date:** 08/06/15

MADEP MCP Response Action Analytical Report Certification

This form provides certifications for all samples performed by MCP methods. Please refer to the Sample Results and Container Information sections of this report for specification of MCP methods used for each analysis. The following questions pertain only to MCP Analytical Methods.

An affirmative response to questions A through F is required for "Presumptive Certainty" status		
A	Were all samples received in a condition consistent with those described on the Chain-of-Custody, properly preserved (including temperature) in the field or laboratory, and prepared/analyzed within method holding times?	YES
B	Were the analytical method(s) and all associated QC requirements specified in the selected CAM protocol(s) followed?	YES
C	Were all required corrective actions and analytical response actions specified in the selected CAM protocol(s) implemented for all identified performance standard non-conformances?	YES
D	Does the laboratory report comply with all the reporting requirements specified in CAM VII A, "Quality Assurance and Quality Control Guidelines for the Acquisition and Reporting of Analytical Data?"	YES
E a.	VPH, EPH, and APH Methods only: Was each method conducted without significant modification(s)? (Refer to the individual method(s) for a list of significant modifications).	N/A
E b.	APH and TO-15 Methods only: Was the complete analyte list reported for each method?	N/A
F	Were all applicable CAM protocol QC and performance standard non-conformances identified and evaluated in a laboratory narrative (including all "No" responses to Questions A through E)?	YES

A response to questions G, H and I is required for "Presumptive Certainty" status		
G	Were the reporting limits at or below all CAM reporting limits specified in the selected CAM protocol(s)?	YES
H	Were all QC performance standards specified in the CAM protocol(s) achieved?	NO
I	Were results reported for the complete analyte list specified in the selected CAM protocol(s)?	YES

For any questions answered "No", please refer to the case narrative section on the following page(s).

Please note that sample matrix information is located in the Sample Results section of this report.

Project Name: NBHS
Project Number: 115058

Lab Number: L1517795
Report Date: 08/06/15

Case Narrative

The samples were received in accordance with the Chain of Custody and no significant deviations were encountered during the preparation or analysis unless otherwise noted. Sample Receipt, Container Information, and the Chain of Custody are located at the back of the report.

Results contained within this report relate only to the samples submitted under this Alpha Lab Number and meet all of the requirements of NELAC, for all NELAC accredited parameters. The data presented in this report is organized by parameter (i.e. VOC, SVOC, etc.). Sample specific Quality Control data (i.e. Surrogate Spike Recovery) is reported at the end of the target analyte list for each individual sample, followed by the Laboratory Batch Quality Control at the end of each parameter. Tentatively Identified Compounds (TICs), if requested, are reported for compounds identified to be present and are not part of the method/program Target Compound List, even if only a subset of the TCL are being reported. If a sample was re-analyzed or re-extracted due to a required quality control corrective action and if both sets of data are reported, the Laboratory ID of the re-analysis or re-extraction is designated with an "R" or "RE", respectively. When multiple Batch Quality Control elements are reported (e.g. more than one LCS), the associated samples for each element are noted in the grey shaded header line of each data table. Any Laboratory Batch, Sample Specific % recovery or RPD value that is outside the listed Acceptance Criteria is bolded in the report. All specific QC information is also incorporated in the Data Usability format of our Data Merger tool where it can be reviewed along with any associated usability implications. Soil/sediments, solids and tissues are reported on a dry weight basis unless otherwise noted. Definitions of all data qualifiers and acronyms used in this report are provided in the Glossary located at the back of the report.

In reference to questions H (CAM) or 4 (RCP) when "NO" is checked, the performance criteria for CAM and RCP methods allow for some quality control failures to occur and still be within method compliance. In these instances the specific failure is not narrated but noted in the associated QC table. The information is also incorporated in the Data Usability format of our Data Merger tool where it can be reviewed along with any associated usability implications.

Please see the associated ADEx data file for a comparison of laboratory reporting limits that were achieved with the regulatory Numerical Standards requested on the Chain of Custody.

HOLD POLICY
For samples submitted on hold, Alpha's policy is to hold samples (with the exception of Air canisters) free of charge for 21 calendar days from the date the project is completed. After 21 calendar days, we will dispose of all samples submitted including those put on hold unless you have contacted your Client Service Representative and made arrangements for Alpha to continue to hold the samples. Air canisters will be disposed after 3 business days from the date the project is completed.

Please contact Client Services at 800-624-9220 with any questions.

Project Name: NBHS **Lab Number:** L1517795
Project Number: 115058 **Report Date:** 08/06/15

Case Narrative (continued)

MCP Related Narratives

Volatile Organics

Effluent (L1517795-02) results are greater than Influent (L1517795-01) results. The sample containers were verified as being labeled correctly by the laboratory, and the reported results were confirmed by the screen analysis results.

In reference to question H:

The initial calibration, associated with L1517795-01 and -02, did not meet the method required minimum response factor on the lowest calibration standard for acetone (0.08622), 2-butanone (0.08198), 4-methyl-2-pentanone (0.05918), and 1,4-dioxane (0.00151), as well as the average response factor for acetone, 2-butanone, 4-methyl-2-pentanone, and 1,4-dioxane.

The continuing calibration standard, associated with L1517795-01 and -02, is outside the acceptance criteria for several compounds; however, it is within overall method allowances. A copy of the continuing calibration standard is included as an addendum to this report.

I, the undersigned, attest under the pains and penalties of perjury that, to the best of my knowledge and belief and based upon my personal inquiry of those responsible for providing the information contained in this analytical report, such information is accurate and complete. This certificate of analysis is not complete unless this page accompanies any and all pages of this report.

Authorized Signature: Kelly Stenstrom

Title: Technical Director/Representative Date: 08/06/15

ORGANICS

VOLATILES

Project Name: NBHS
Project Number: 115058
Lab Number: L1517795
Report Date: 08/06/15

SAMPLE RESULTS

Lab ID: L1517795-01
Client ID: INFLUENT-TANK
Sample Location: NEW BEDFORD, MA
Matrix: Water
Analytical Method: 97,8260C
Analytical Date: 08/01/15 07:34
Analyst: MM

Date Collected: 07/30/15 11:15
Date Received: 07/30/15
Field Prep: Not Specified

Parameter	Result	Qualifier	Units	RL	MDL	Dilution Factor
MCP Volatile Organics - Westborough Lab						
Methylene chloride	ND		ug/l	2.0	--	1
1,1-Dichloroethane	ND		ug/l	1.0	--	1
Chloroform	ND		ug/l	1.0	--	1
Carbon tetrachloride	ND		ug/l	1.0	--	1
1,2-Dichloropropane	ND		ug/l	1.0	--	1
Dibromochloromethane	ND		ug/l	1.0	--	1
1,1,2-Trichloroethane	ND		ug/l	1.0	--	1
Tetrachloroethene	ND		ug/l	1.0	--	1
Chlorobenzene	ND		ug/l	1.0	--	1
Trichlorofluoromethane	ND		ug/l	2.0	--	1
1,2-Dichloroethane	ND		ug/l	1.0	--	1
1,1,1-Trichloroethane	ND		ug/l	1.0	--	1
Bromodichloromethane	ND		ug/l	1.0	--	1
trans-1,3-Dichloropropene	ND		ug/l	0.50	--	1
cis-1,3-Dichloropropene	ND		ug/l	0.50	--	1
1,3-Dichloropropene, Total	ND		ug/l	0.50	--	1
1,1-Dichloropropene	ND		ug/l	2.0	--	1
Bromoform	ND		ug/l	2.0	--	1
1,1,2,2-Tetrachloroethane	ND		ug/l	1.0	--	1
Benzene	ND		ug/l	0.50	--	1
Toluene	ND		ug/l	1.0	--	1
Ethylbenzene	ND		ug/l	1.0	--	1
Chloromethane	ND		ug/l	2.0	--	1
Bromomethane	ND		ug/l	2.0	--	1
Vinyl chloride	9.4		ug/l	1.0	--	1
Chloroethane	ND		ug/l	2.0	--	1
1,1-Dichloroethene	ND		ug/l	1.0	--	1
trans-1,2-Dichloroethene	4.1		ug/l	1.0	--	1
Trichloroethene	2.4		ug/l	1.0	--	1
1,2-Dichlorobenzene	ND		ug/l	1.0	--	1

Project Name: NBHS **Lab Number:** L1517795

Project Number: 115058 **Report Date:** 08/06/15

SAMPLE RESULTS

Lab ID: L1517795-01 Date Collected: 07/30/15 11:15

Client ID: INFLUENT-TANK Date Received: 07/30/15

Sample Location: NEW BEDFORD, MA Field Prep: Not Specified

Parameter	Result	Qualifier	Units	RL	MDL	Dilution Factor
MCP Volatile Organics - Westborough Lab						
1,3-Dichlorobenzene	ND		ug/l	1.0	--	1
1,4-Dichlorobenzene	2.6		ug/l	1.0	--	1
Methyl tert butyl ether	ND		ug/l	2.0	--	1
p/m-Xylene	ND		ug/l	2.0	--	1
o-Xylene	ND		ug/l	1.0	--	1
Xylene (Total)	ND		ug/l	1.0	--	1
cis-1,2-Dichloroethene	7.4		ug/l	1.0	--	1
1,2-Dichloroethene (total)	12		ug/l	1.0	--	1
Dibromomethane	ND		ug/l	2.0	--	1
1,2,3-Trichloropropane	ND		ug/l	2.0	--	1
Styrene	ND		ug/l	1.0	--	1
Dichlorodifluoromethane	ND		ug/l	2.0	--	1
Acetone	ND		ug/l	5.0	--	1
Carbon disulfide	ND		ug/l	2.0	--	1
2-Butanone	ND		ug/l	5.0	--	1
4-Methyl-2-pentanone	ND		ug/l	5.0	--	1
2-Hexanone	ND		ug/l	5.0	--	1
Bromochloromethane	ND		ug/l	2.0	--	1
Tetrahydrofuran	ND		ug/l	2.0	--	1
2,2-Dichloropropane	ND		ug/l	2.0	--	1
1,2-Dibromoethane	ND		ug/l	2.0	--	1
1,3-Dichloropropane	ND		ug/l	2.0	--	1
1,1,1,2-Tetrachloroethane	ND		ug/l	1.0	--	1
Bromobenzene	ND		ug/l	2.0	--	1
n-Butylbenzene	ND		ug/l	2.0	--	1
sec-Butylbenzene	ND		ug/l	2.0	--	1
tert-Butylbenzene	ND		ug/l	2.0	--	1
o-Chlorotoluene	ND		ug/l	2.0	--	1
p-Chlorotoluene	ND		ug/l	2.0	--	1
1,2-Dibromo-3-chloropropane	ND		ug/l	2.0	--	1
Hexachlorobutadiene	ND		ug/l	0.60	--	1
Isopropylbenzene	ND		ug/l	2.0	--	1
p-Isopropyltoluene	ND		ug/l	2.0	--	1
Naphthalene	ND		ug/l	2.0	--	1
n-Propylbenzene	ND		ug/l	2.0	--	1
1,2,3-Trichlorobenzene	ND		ug/l	2.0	--	1
1,2,4-Trichlorobenzene	ND		ug/l	2.0	--	1
1,3,5-Trimethylbenzene	ND		ug/l	2.0	--	1
1,2,4-Trimethylbenzene	ND		ug/l	2.0	--	1

Project Name: NBHS **Lab Number:** L1517795

Project Number: 115058 **Report Date:** 08/06/15

SAMPLE RESULTS

Lab ID: L1517795-01 Date Collected: 07/30/15 11:15

Client ID: INFLUENT-TANK Date Received: 07/30/15

Sample Location: NEW BEDFORD, MA Field Prep: Not Specified

Parameter	Result	Qualifier	Units	RL	MDL	Dilution Factor
MCP Volatile Organics - Westborough Lab						
Ethyl ether	ND		ug/l	2.0	--	1
Isopropyl Ether	ND		ug/l	2.0	--	1
Ethyl-Tert-Butyl-Ether	ND		ug/l	2.0	--	1
Tertiary-Amyl Methyl Ether	ND		ug/l	2.0	--	1
1,4-Dioxane	ND		ug/l	250	--	1

Surrogate	% Recovery	Qualifier	Acceptance Criteria
1,2-Dichloroethane-d4	112		70-130
Toluene-d8	103		70-130
4-Bromofluorobenzene	96		70-130
Dibromofluoromethane	97		70-130

Project Name: NBHS
Project Number: 115058
Lab Number: L1517795
Report Date: 08/06/15

SAMPLE RESULTS

Lab ID: L1517795-02
Client ID: EFFLUENT-SP7
Sample Location: NEW BEDFORD, MA
Matrix: Water
Analytical Method: 97,8260C
Analytical Date: 08/01/15 07:02
Analyst: MM

Date Collected: 07/30/15 10:45
Date Received: 07/30/15
Field Prep: Not Specified

Parameter	Result	Qualifier	Units	RL	MDL	Dilution Factor
MCP Volatile Organics - Westborough Lab						
Methylene chloride	ND		ug/l	2.0	--	1
1,1-Dichloroethane	ND		ug/l	1.0	--	1
Chloroform	ND		ug/l	1.0	--	1
Carbon tetrachloride	ND		ug/l	1.0	--	1
1,2-Dichloropropane	ND		ug/l	1.0	--	1
Dibromochloromethane	ND		ug/l	1.0	--	1
1,1,2-Trichloroethane	ND		ug/l	1.0	--	1
Tetrachloroethene	ND		ug/l	1.0	--	1
Chlorobenzene	ND		ug/l	1.0	--	1
Trichlorofluoromethane	ND		ug/l	2.0	--	1
1,2-Dichloroethane	ND		ug/l	1.0	--	1
1,1,1-Trichloroethane	ND		ug/l	1.0	--	1
Bromodichloromethane	ND		ug/l	1.0	--	1
trans-1,3-Dichloropropene	ND		ug/l	0.50	--	1
cis-1,3-Dichloropropene	ND		ug/l	0.50	--	1
1,3-Dichloropropene, Total	ND		ug/l	0.50	--	1
1,1-Dichloropropene	ND		ug/l	2.0	--	1
Bromoform	ND		ug/l	2.0	--	1
1,1,2,2-Tetrachloroethane	ND		ug/l	1.0	--	1
Benzene	ND		ug/l	0.50	--	1
Toluene	ND		ug/l	1.0	--	1
Ethylbenzene	ND		ug/l	1.0	--	1
Chloromethane	ND		ug/l	2.0	--	1
Bromomethane	ND		ug/l	2.0	--	1
Vinyl chloride	ND		ug/l	1.0	--	1
Chloroethane	ND		ug/l	2.0	--	1
1,1-Dichloroethene	ND		ug/l	1.0	--	1
trans-1,2-Dichloroethene	16		ug/l	1.0	--	1
Trichloroethene	ND		ug/l	1.0	--	1
1,2-Dichlorobenzene	ND		ug/l	1.0	--	1

Project Name: NBHS **Lab Number:** L1517795

Project Number: 115058 **Report Date:** 08/06/15

SAMPLE RESULTS

Lab ID: L1517795-02 Date Collected: 07/30/15 10:45

Client ID: EFFLUENT-SP7 Date Received: 07/30/15

Sample Location: NEW BEDFORD, MA Field Prep: Not Specified

Parameter	Result	Qualifier	Units	RL	MDL	Dilution Factor
MCP Volatile Organics - Westborough Lab						
1,3-Dichlorobenzene	ND		ug/l	1.0	--	1
1,4-Dichlorobenzene	ND		ug/l	1.0	--	1
Methyl tert butyl ether	ND		ug/l	2.0	--	1
p/m-Xylene	ND		ug/l	2.0	--	1
o-Xylene	ND		ug/l	1.0	--	1
Xylene (Total)	ND		ug/l	1.0	--	1
cis-1,2-Dichloroethene	19		ug/l	1.0	--	1
1,2-Dichloroethene (total)	35		ug/l	1.0	--	1
Dibromomethane	ND		ug/l	2.0	--	1
1,2,3-Trichloropropane	ND		ug/l	2.0	--	1
Styrene	ND		ug/l	1.0	--	1
Dichlorodifluoromethane	ND		ug/l	2.0	--	1
Acetone	ND		ug/l	5.0	--	1
Carbon disulfide	ND		ug/l	2.0	--	1
2-Butanone	ND		ug/l	5.0	--	1
4-Methyl-2-pentanone	ND		ug/l	5.0	--	1
2-Hexanone	ND		ug/l	5.0	--	1
Bromochloromethane	ND		ug/l	2.0	--	1
Tetrahydrofuran	2.5		ug/l	2.0	--	1
2,2-Dichloropropane	ND		ug/l	2.0	--	1
1,2-Dibromoethane	ND		ug/l	2.0	--	1
1,3-Dichloropropane	ND		ug/l	2.0	--	1
1,1,1,2-Tetrachloroethane	ND		ug/l	1.0	--	1
Bromobenzene	ND		ug/l	2.0	--	1
n-Butylbenzene	ND		ug/l	2.0	--	1
sec-Butylbenzene	ND		ug/l	2.0	--	1
tert-Butylbenzene	ND		ug/l	2.0	--	1
o-Chlorotoluene	ND		ug/l	2.0	--	1
p-Chlorotoluene	ND		ug/l	2.0	--	1
1,2-Dibromo-3-chloropropane	ND		ug/l	2.0	--	1
Hexachlorobutadiene	ND		ug/l	0.60	--	1
Isopropylbenzene	ND		ug/l	2.0	--	1
p-Isopropyltoluene	ND		ug/l	2.0	--	1
Naphthalene	ND		ug/l	2.0	--	1
n-Propylbenzene	ND		ug/l	2.0	--	1
1,2,3-Trichlorobenzene	ND		ug/l	2.0	--	1
1,2,4-Trichlorobenzene	ND		ug/l	2.0	--	1
1,3,5-Trimethylbenzene	ND		ug/l	2.0	--	1
1,2,4-Trimethylbenzene	ND		ug/l	2.0	--	1

Project Name: NBHS **Lab Number:** L1517795

Project Number: 115058 **Report Date:** 08/06/15

SAMPLE RESULTS

Lab ID: L1517795-02 Date Collected: 07/30/15 10:45

Client ID: EFFLUENT-SP7 Date Received: 07/30/15

Sample Location: NEW BEDFORD, MA Field Prep: Not Specified

Parameter	Result	Qualifier	Units	RL	MDL	Dilution Factor
MCP Volatile Organics - Westborough Lab						
Ethyl ether	ND		ug/l	2.0	--	1
Isopropyl Ether	ND		ug/l	2.0	--	1
Ethyl-Tert-Butyl-Ether	ND		ug/l	2.0	--	1
Tertiary-Amyl Methyl Ether	ND		ug/l	2.0	--	1
1,4-Dioxane	ND		ug/l	250	--	1

Surrogate	% Recovery	Qualifier	Acceptance Criteria
1,2-Dichloroethane-d4	111		70-130
Toluene-d8	103		70-130
4-Bromofluorobenzene	99		70-130
Dibromofluoromethane	97		70-130

Project Name: NBHS
Project Number: 115058

Lab Number: L1517795
Report Date: 08/06/15

Method Blank Analysis
Batch Quality Control

Analytical Method: 97,8260C
Analytical Date: 08/01/15 05:58
Analyst: MM

Parameter	Result	Qualifier	Units	RL	MDL
MCP Volatile Organics - Westborough Lab for sample(s): 01-02 Batch: WG808108-3					
Methylene chloride	ND		ug/l	2.0	--
1,1-Dichloroethane	ND		ug/l	1.0	--
Chloroform	ND		ug/l	1.0	--
Carbon tetrachloride	ND		ug/l	1.0	--
1,2-Dichloropropane	ND		ug/l	1.0	--
Dibromochloromethane	ND		ug/l	1.0	--
1,1,2-Trichloroethane	ND		ug/l	1.0	--
Tetrachloroethene	ND		ug/l	1.0	--
Chlorobenzene	ND		ug/l	1.0	--
Trichlorofluoromethane	ND		ug/l	2.0	--
1,2-Dichloroethane	ND		ug/l	1.0	--
1,1,1-Trichloroethane	ND		ug/l	1.0	--
Bromodichloromethane	ND		ug/l	1.0	--
trans-1,3-Dichloropropene	ND		ug/l	0.50	--
cis-1,3-Dichloropropene	ND		ug/l	0.50	--
1,3-Dichloropropene, Total	ND		ug/l	0.50	--
1,1-Dichloropropene	ND		ug/l	2.0	--
Bromoform	ND		ug/l	2.0	--
1,1,2,2-Tetrachloroethane	ND		ug/l	1.0	--
Benzene	ND		ug/l	0.50	--
Toluene	ND		ug/l	1.0	--
Ethylbenzene	ND		ug/l	1.0	--
Chloromethane	ND		ug/l	2.0	--
Bromomethane	ND		ug/l	2.0	--
Vinyl chloride	ND		ug/l	1.0	--
Chloroethane	ND		ug/l	2.0	--
1,1-Dichloroethene	ND		ug/l	1.0	--
trans-1,2-Dichloroethene	ND		ug/l	1.0	--
Trichloroethene	ND		ug/l	1.0	--

Project Name: NBHS **Lab Number:** L1517795

Project Number: 115058 **Report Date:** 08/06/15

Method Blank Analysis
Batch Quality Control

Analytical Method: 97,8260C
Analytical Date: 08/01/15 05:58
Analyst: MM

Parameter	Result	Qualifier	Units	RL	MDL
MCP Volatile Organics - Westborough Lab for sample(s): 01-02 Batch: WG808108-3					
1,2-Dichlorobenzene	ND		ug/l	1.0	--
1,3-Dichlorobenzene	ND		ug/l	1.0	--
1,4-Dichlorobenzene	ND		ug/l	1.0	--
Methyl tert butyl ether	ND		ug/l	2.0	--
p/m-Xylene	ND		ug/l	2.0	--
o-Xylene	ND		ug/l	1.0	--
Xylene (Total)	ND		ug/l	1.0	--
cis-1,2-Dichloroethene	ND		ug/l	1.0	--
1,2-Dichloroethene (total)	ND		ug/l	1.0	--
Dibromomethane	ND		ug/l	2.0	--
1,2,3-Trichloropropane	ND		ug/l	2.0	--
Styrene	ND		ug/l	1.0	--
Dichlorodifluoromethane	ND		ug/l	2.0	--
Acetone	ND		ug/l	5.0	--
Carbon disulfide	ND		ug/l	2.0	--
2-Butanone	ND		ug/l	5.0	--
4-Methyl-2-pentanone	ND		ug/l	5.0	--
2-Hexanone	ND		ug/l	5.0	--
Bromochloromethane	ND		ug/l	2.0	--
Tetrahydrofuran	ND		ug/l	2.0	--
2,2-Dichloropropane	ND		ug/l	2.0	--
1,2-Dibromoethane	ND		ug/l	2.0	--
1,3-Dichloropropane	ND		ug/l	2.0	--
1,1,1,2-Tetrachloroethane	ND		ug/l	1.0	--
Bromobenzene	ND		ug/l	2.0	--
n-Butylbenzene	ND		ug/l	2.0	--
sec-Butylbenzene	ND		ug/l	2.0	--
tert-Butylbenzene	ND		ug/l	2.0	--
o-Chlorotoluene	ND		ug/l	2.0	--

Project Name: NBHS **Lab Number:** L1517795

Project Number: 115058 **Report Date:** 08/06/15

Method Blank Analysis
Batch Quality Control

Analytical Method: 97,8260C
Analytical Date: 08/01/15 05:58
Analyst: MM

Parameter	Result	Qualifier	Units	RL	MDL
MCP Volatile Organics - Westborough Lab for sample(s): 01-02 Batch: WG808108-3					
p-Chlorotoluene	ND		ug/l	2.0	--
1,2-Dibromo-3-chloropropane	ND		ug/l	2.0	--
Hexachlorobutadiene	ND		ug/l	0.60	--
Isopropylbenzene	ND		ug/l	2.0	--
p-Isopropyltoluene	ND		ug/l	2.0	--
Naphthalene	ND		ug/l	2.0	--
n-Propylbenzene	ND		ug/l	2.0	--
1,2,3-Trichlorobenzene	ND		ug/l	2.0	--
1,2,4-Trichlorobenzene	ND		ug/l	2.0	--
1,3,5-Trimethylbenzene	ND		ug/l	2.0	--
1,2,4-Trimethylbenzene	ND		ug/l	2.0	--
Ethyl ether	ND		ug/l	2.0	--
Isopropyl Ether	ND		ug/l	2.0	--
Ethyl-Tert-Butyl-Ether	ND		ug/l	2.0	--
Tertiary-Amyl Methyl Ether	ND		ug/l	2.0	--
1,4-Dioxane	ND		ug/l	250	--
1,1,2-Trichloro-1,2,2-Trifluoroethane	ND		ug/l	2.0	--

Surrogate	%Recovery	Qualifier	Acceptance Criteria
1,2-Dichloroethane-d4	109		70-130
Toluene-d8	103		70-130
4-Bromofluorobenzene	101		70-130
Dibromofluoromethane	95		70-130

Lab Control Sample Analysis
Batch Quality Control

Project Name: NBHS
Project Number: 115058

Lab Number: L1517795
Report Date: 08/06/15

Parameter	LCS %Recovery	Qual	LCSD %Recovery	Qual	%Recovery Limits	RPD	Qual	RPD Limits
MCP Volatile Organics - Westborough Lab Associated sample(s): 01-02 Batch: WG808108-1 WG808108-2								
Methylene chloride	97		90		70-130	7		20
1,1-Dichloroethane	95		90		70-130	5		20
Chloroform	102		96		70-130	6		20
Carbon tetrachloride	98		92		70-130	6		20
1,2-Dichloropropane	93		88		70-130	6		20
Dibromochloromethane	114		108		70-130	5		20
1,1,2-Trichloroethane	110		104		70-130	6		20
Tetrachloroethene	106		99		70-130	7		20
Chlorobenzene	107		101		70-130	6		20
Trichlorofluoromethane	102		96		70-130	6		20
1,2-Dichloroethane	106		100		70-130	6		20
1,1,1-Trichloroethane	101		96		70-130	5		20
Bromodichloromethane	105		100		70-130	5		20
trans-1,3-Dichloropropene	92		86		70-130	7		20
cis-1,3-Dichloropropene	87		83		70-130	5		20
1,1-Dichloropropene	99		94		70-130	5		20
Bromoform	115		110		70-130	4		20
1,1,2,2-Tetrachloroethane	110		104		70-130	6		20
Benzene	96		91		70-130	5		20
Toluene	103		98		70-130	5		20
Ethylbenzene	109		103		70-130	6		20

Lab Control Sample Analysis
Batch Quality Control

Project Name: NBHS
Project Number: 115058

Lab Number: L1517795
Report Date: 08/06/15

Parameter	LCS %Recovery	Qual	LCSD %Recovery	Qual	%Recovery Limits	RPD	Qual	RPD Limits
MCP Volatile Organics - Westborough Lab Associated sample(s): 01-02 Batch: WG808108-1 WG808108-2								
Chloromethane	74		72		70-130	3		20
Bromomethane	81		80		70-130	1		20
Vinyl chloride	88		84		70-130	5		20
Chloroethane	88		82		70-130	7		20
1,1-Dichloroethene	91		87		70-130	4		20
trans-1,2-Dichloroethene	94		88		70-130	7		20
Trichloroethene	96		92		70-130	4		20
1,2-Dichlorobenzene	113		107		70-130	5		20
1,3-Dichlorobenzene	109		102		70-130	7		20
1,4-Dichlorobenzene	110		105		70-130	5		20
Methyl tert butyl ether	98		94		70-130	4		20
p/m-Xylene	109		103		70-130	6		20
o-Xylene	110		104		70-130	6		20
cis-1,2-Dichloroethene	96		89		70-130	8		20
Dibromomethane	107		100		70-130	7		20
1,2,3-Trichloropropane	114		108		70-130	5		20
Styrene	112		105		70-130	6		20
Dichlorodifluoromethane	98		92		70-130	6		20
Acetone	110		101		70-130	9		20
Carbon disulfide	82		78		70-130	5		20
2-Butanone	110		105		70-130	5		20

Lab Control Sample Analysis
Batch Quality Control

Project Name: NBHS
Project Number: 115058

Lab Number: L1517795
Report Date: 08/06/15

Parameter	LCS %Recovery	Qual	LCSD %Recovery	Qual	%Recovery Limits	RPD	Qual	RPD Limits
MCP Volatile Organics - Westborough Lab Associated sample(s): 01-02 Batch: WG808108-1 WG808108-2								
4-Methyl-2-pentanone	100		96		70-130	4		20
2-Hexanone	108		105		70-130	3		20
Bromochloromethane	102		93		70-130	9		20
Tetrahydrofuran	91		88		70-130	3		20
2,2-Dichloropropane	93		86		70-130	8		20
1,2-Dibromoethane	121		110		70-130	10		20
1,3-Dichloropropane	111		104		70-130	7		20
1,1,1,2-Tetrachloroethane	111		104		70-130	7		20
Bromobenzene	109		103		70-130	6		20
n-Butylbenzene	108		102		70-130	6		20
sec-Butylbenzene	108		102		70-130	6		20
tert-Butylbenzene	108		103		70-130	5		20
o-Chlorotoluene	108		102		70-130	6		20
p-Chlorotoluene	109		104		70-130	5		20
1,2-Dibromo-3-chloropropane	116		112		70-130	4		20
Hexachlorobutadiene	113		108		70-130	5		20
Isopropylbenzene	109		102		70-130	7		20
p-Isopropyltoluene	111		105		70-130	6		20
Naphthalene	106		105		70-130	1		20
n-Propylbenzene	110		104		70-130	6		20
1,2,3-Trichlorobenzene	118		115		70-130	3		20

Lab Control Sample Analysis
Batch Quality Control

Project Name: NBHS
Project Number: 115058

Lab Number: L1517795
Report Date: 08/06/15

Parameter	LCS %Recovery	Qual	LCSD %Recovery	Qual	%Recovery Limits	RPD	Qual	RPD Limits
MCP Volatile Organics - Westborough Lab Associated sample(s): 01-02 Batch: WG808108-1 WG808108-2								
1,2,4-Trichlorobenzene	111		107		70-130	4		20
1,3,5-Trimethylbenzene	112		106		70-130	6		20
1,2,4-Trimethylbenzene	113		107		70-130	5		20
Ethyl ether	102		96		70-130	6		20
Isopropyl Ether	84		80		70-130	5		20
Ethyl-Tert-Butyl-Ether	90		86		70-130	5		20
Tertiary-Amyl Methyl Ether	88		85		70-130	3		20
1,4-Dioxane	111		107		70-130	4		20
1,1,2-Trichloro-1,2,2-Trifluoroethane	100		94		70-130	6		20

Surrogate	LCS %Recovery	Qual	LCSD %Recovery	Qual	Acceptance Criteria
1,2-Dichloroethane-d4	108		107		70-130
Toluene-d8	103		103		70-130
4-Bromofluorobenzene	96		96		70-130
Dibromofluoromethane	98		99		70-130

PCBS

Project Name: NBHS
Project Number: 115058

Lab Number: L1517795
Report Date: 08/06/15

SAMPLE RESULTS

Lab ID:	L1517795-01
Client ID:	INFLUENT-TANK
Sample Location:	NEW BEDFORD, MA
Matrix:	Water
Analytical Method:	97,8082A
Analytical Date:	07/31/15 18:20
Analyst:	JT

Date Collected:	07/30/15 11:15
Date Received:	07/30/15
Field Prep:	Not Specified
Extraction Method:	EPA 3510C
Extraction Date:	07/30/15 22:50
Cleanup Method:	EPA 3665A
Cleanup Date:	07/31/15
Cleanup Method:	EPA 3660B
Cleanup Date:	07/31/15

Parameter	Result	Qualifier	Units	RL	MDL	Dilution Factor	Column
MCP Polychlorinated Biphenyls - Westborough Lab							
Aroclor 1016	ND		ug/l	0.250	--	1	A
Aroclor 1221	ND		ug/l	0.250	--	1	A
Aroclor 1232	ND		ug/l	0.250	--	1	A
Aroclor 1242	ND		ug/l	0.250	--	1	A
Aroclor 1248	ND		ug/l	0.250	--	1	A
Aroclor 1254	5.89		ug/l	0.250	--	1	B
Aroclor 1260	ND		ug/l	0.250	--	1	A
Aroclor 1262	ND		ug/l	0.250	--	1	A
Aroclor 1268	ND		ug/l	0.250	--	1	A
PCBs, Total	5.89		ug/l	0.250	--	1	A

Surrogate	% Recovery	Qualifier	Acceptance Criteria	Column
2,4,5,6-Tetrachloro-m-xylene	93		30-150	A
Decachlorobiphenyl	90		30-150	A
2,4,5,6-Tetrachloro-m-xylene	98		30-150	B
Decachlorobiphenyl	99		30-150	B

Project Name: NBHS
Project Number: 115058

Lab Number: L1517795
Report Date: 08/06/15

SAMPLE RESULTS

Lab ID:	L1517795-02	Date Collected:	07/30/15 10:45
Client ID:	EFFLUENT-SP7	Date Received:	07/30/15
Sample Location:	NEW BEDFORD, MA	Field Prep:	Not Specified
Matrix:	Water	Extraction Method:	EPA 3510C
Analytical Method:	97,8082A	Extraction Date:	07/30/15 22:50
Analytical Date:	07/31/15 18:35	Cleanup Method:	EPA 3665A
Analyst:	JT	Cleanup Date:	07/31/15
		Cleanup Method:	EPA 3660B
		Cleanup Date:	07/31/15

Parameter	Result	Qualifier	Units	RL	MDL	Dilution Factor	Column
MCP Polychlorinated Biphenyls - Westborough Lab							
Aroclor 1016	ND		ug/l	0.250	--	1	A
Aroclor 1221	ND		ug/l	0.250	--	1	A
Aroclor 1232	ND		ug/l	0.250	--	1	A
Aroclor 1242	ND		ug/l	0.250	--	1	A
Aroclor 1248	ND		ug/l	0.250	--	1	A
Aroclor 1254	ND		ug/l	0.250	--	1	A
Aroclor 1260	ND		ug/l	0.250	--	1	A
Aroclor 1262	ND		ug/l	0.250	--	1	A
Aroclor 1268	ND		ug/l	0.250	--	1	A
PCBs, Total	ND		ug/l	0.250	--	1	A

Surrogate	% Recovery	Qualifier	Acceptance Criteria	Column
2,4,5,6-Tetrachloro-m-xylene	93		30-150	A
Decachlorobiphenyl	97		30-150	A
2,4,5,6-Tetrachloro-m-xylene	97		30-150	B
Decachlorobiphenyl	104		30-150	B

Project Name: NBHS

Project Number: 115058

Lab Number: L1517795

Report Date: 08/06/15

Method Blank Analysis
Batch Quality Control

Analytical Method: 97,8082A
Analytical Date: 07/31/15 16:28
Analyst: JT

Extraction Method: EPA 3510C
Extraction Date: 07/30/15 21:04
Cleanup Method: EPA 3665A
Cleanup Date: 07/31/15
Cleanup Method: EPA 3660B
Cleanup Date: 07/31/15

Parameter	Result	Qualifier	Units	RL	MDL	Column
MCP Polychlorinated Biphenyls - Westborough Lab for sample(s): 01-02 Batch: WG807587-1						
Aroclor 1016	ND		ug/l	0.250	--	A
Aroclor 1221	ND		ug/l	0.250	--	A
Aroclor 1232	ND		ug/l	0.250	--	A
Aroclor 1242	ND		ug/l	0.250	--	A
Aroclor 1248	ND		ug/l	0.250	--	A
Aroclor 1254	ND		ug/l	0.250	--	A
Aroclor 1260	ND		ug/l	0.250	--	A
Aroclor 1262	ND		ug/l	0.250	--	A
Aroclor 1268	ND		ug/l	0.250	--	A
PCBs, Total	ND		ug/l	0.250	--	A

Surrogate	%Recovery	Qualifier	Acceptance Criteria	Column
2,4,5,6-Tetrachloro-m-xylene	63		30-150	A
Decachlorobiphenyl	78		30-150	A
2,4,5,6-Tetrachloro-m-xylene	65		30-150	B
Decachlorobiphenyl	82		30-150	B

Lab Control Sample Analysis
Batch Quality Control

Project Name: NBHS
Project Number: 115058

Lab Number: L1517795
Report Date: 08/06/15

Parameter	LCS %Recovery	Qual	LCSD %Recovery	Qual	%Recovery Limits	RPD	Qual	RPD Limits	Column
MCP Polychlorinated Biphenyls - Westborough Lab Associated sample(s): 01-02 Batch: WG807587-2 WG807587-3									
Aroclor 1016	82		84		40-140	3		20	A
Aroclor 1260	79		82		40-140	3		20	A

Surrogate	LCS %Recovery	Qual	LCSD %Recovery	Qual	Acceptance Criteria	Column
2,4,5,6-Tetrachloro-m-xylene	71		71		30-150	A
Decachlorobiphenyl	87		87		30-150	A
2,4,5,6-Tetrachloro-m-xylene	73		73		30-150	B
Decachlorobiphenyl	93		92		30-150	B

Project Name: NBHS
Project Number: 115058

Lab Number: L1517795
Report Date: 08/06/15

Sample Receipt and Container Information

Were project specific reporting limits specified? YES

Reagent H2O Preserved Vials Frozen on: NA

Cooler Information Custody Seal

Cooler	
A	Absent

Container Information

Container ID	Container Type	Cooler	pH	Temp deg C	Pres	Seal	Analysis(*)
L1517795-01A	Vial HCl preserved	A	N/A	5.9	Y	Absent	MCP-8260-10(14)
L1517795-01B	Vial HCl preserved	A	N/A	5.9	Y	Absent	MCP-8260-10(14)
L1517795-01C	Vial HCl preserved	A	N/A	5.9	Y	Absent	MCP-8260-10(14)
L1517795-01D	Amber 1000ml unpreserved	A	7	5.9	Y	Absent	MCP-8082-10(365)
L1517795-01E	Amber 1000ml unpreserved	A	7	5.9	Y	Absent	MCP-8082-10(365)
L1517795-02A	Vial HCl preserved	A	N/A	5.9	Y	Absent	MCP-8260-10(14)
L1517795-02B	Vial HCl preserved	A	N/A	5.9	Y	Absent	MCP-8260-10(14)
L1517795-02C	Vial HCl preserved	A	N/A	5.9	Y	Absent	MCP-8260-10(14)
L1517795-02D	Amber 1000ml unpreserved	A	7	5.9	Y	Absent	MCP-8082-10(365)
L1517795-02E	Amber 1000ml unpreserved	A	7	5.9	Y	Absent	MCP-8082-10(365)

*Values in parentheses indicate holding time in days

Project Name: NBHS **Lab Number:** L1517795

Project Number: 115058 **Report Date:** 08/06/15

GLOSSARY

Acronyms

EDL - Estimated Detection Limit: This value represents the level to which target analyte concentrations are reported as estimated values, when those target analyte concentrations are quantified below the reporting limit (RL). The EDL includes any adjustments from dilutions, concentrations or moisture content, where applicable. The use of EDLs is specific to the analysis of PAHs using Solid-Phase Microextraction (SPME).

EPA - Environmental Protection Agency.

LCS - Laboratory Control Sample: A sample matrix, free from the analytes of interest, spiked with verified known amounts of analytes or a material containing known and verified amounts of analytes.

LCSD - Laboratory Control Sample Duplicate: Refer to LCS.

LFB - Laboratory Fortified Blank: A sample matrix, free from the analytes of interest, spiked with verified known amounts of analytes or a material containing known and verified amounts of analytes.

MDL - Method Detection Limit: This value represents the level to which target analyte concentrations are reported as estimated values, when those target analyte concentrations are quantified below the reporting limit (RL). The MDL includes any adjustments from dilutions, concentrations or moisture content, where applicable.

MS - Matrix Spike Sample: A sample prepared by adding a known mass of target analyte to a specified amount of matrix sample for which an independent estimate of target analyte concentration is available.

MSD - Matrix Spike Sample Duplicate: Refer to MS.

NA - Not Applicable.

NC - Not Calculated: Term is utilized when one or more of the results utilized in the calculation are non-detect at the parameter's reporting unit.

NI - Not Ignitable.

NP - Non-Plastic: Term is utilized for the analysis of Atterberg Limits in soil.

RL - Reporting Limit: The value at which an instrument can accurately measure an analyte at a specific concentration. The RL includes any adjustments from dilutions, concentrations or moisture content, where applicable.

RPD - Relative Percent Difference: The results from matrix and/or matrix spike duplicates are primarily designed to assess the precision of analytical results in a given matrix and are expressed as relative percent difference (RPD). Values which are less than five times the reporting limit for any individual parameter are evaluated by utilizing the absolute difference between the values; although the RPD value will be provided in the report.

SRM - Standard Reference Material: A reference sample of a known or certified value that is of the same or similar matrix as the associated field samples.

TIC - Tentatively Identified Compound: A compound that has been identified to be present and is not part of the target compound list (TCL) for the method and/or program. All TICs are qualitatively identified and reported as estimated concentrations.

Footnotes

1 - The reference for this analyte should be considered modified since this analyte is absent from the target analyte list of the original method.

Terms

Total: With respect to Organic analyses, a 'Total' result is defined as the summation of results for individual isomers or Aroclors. If a 'Total' result is requested, the results of its individual components will also be reported. This is applicable to 'Total' results for methods 8260, 8081 and 8082.

Analytical Method: Both the document from which the method originates and the analytical reference method. (Example: EPA 8260B is shown as 1,8260B.) The codes for the reference method documents are provided in the References section of the Addendum.

Data Qualifiers

A - Spectra identified as "Aldol Condensation Product".

B - The analyte was detected above the reporting limit in the associated method blank. Flag only applies to associated field samples that have detectable concentrations of the analyte at less than ten times (10x) the concentration found in the blank. For MCP-related projects, flag only applies to associated field samples that have detectable concentrations of the analyte at less than ten times (10x) the concentration found in the blank. For DOD-related projects, flag only applies to associated field samples that have detectable concentrations of the analyte at less than ten times (10x) the concentration found in the blank AND the analyte was detected above one-half the reporting limit (or above the reporting limit for common lab contaminants) in the associated method blank. For NJ-Air-related projects, flag only applies to associated field samples that have detectable concentrations of the analyte above the reporting limit. For NJ-related projects (excluding Air), flag only applies to associated field samples that have detectable concentrations of the analyte, which was detected above the reporting limit in the associated method blank or above five times the reporting limit for common lab contaminants (Phthalates, Acetone, Methylene Chloride, 2-Butanone).

C - Co-elution: The target analyte co-elutes with a known lab standard (i.e. surrogate, internal standards, etc.) for co-extracted analyses.

Report Format: Data Usability Report

Project Name: NBHS **Lab Number:** L1517795

Project Number: 115058 **Report Date:** 08/06/15

Data Qualifiers

D - Concentration of analyte was quantified from diluted analysis. Flag only applies to field samples that have detectable concentrations of the analyte.

E - Concentration of analyte exceeds the range of the calibration curve and/or linear range of the instrument.

G - The concentration may be biased high due to matrix interferences (i.e, co-elution) with non-target compound(s). The result should be considered estimated.

H - The analysis of pH was performed beyond the regulatory-required holding time of 15 minutes from the time of sample collection.

I - The lower value for the two columns has been reported due to obvious interference.

M - Reporting Limit (RL) exceeds the MCP CAM Reporting Limit for this analyte.

NJ - Presumptive evidence of compound. This represents an estimated concentration for Tentatively Identified Compounds (TICs), where the identification is based on a mass spectral library search.

P - The RPD between the results for the two columns exceeds the method-specified criteria.

Q - The quality control sample exceeds the associated acceptance criteria. For DOD-related projects, LCS and/or Continuing Calibration Standard exceedences are also qualified on all associated sample results. Note: This flag is not applicable for matrix spike recoveries when the sample concentration is greater than 4x the spike added or for batch duplicate RPD when the sample concentrations are less than 5x the RL. (Metals only.)

R - Analytical results are from sample re-analysis.

RE - Analytical results are from sample re-extraction.

S - Analytical results are from modified screening analysis.

J - Estimated value. This represents an estimated concentration for Tentatively Identified Compounds (TICs).

ND - Not detected at the reporting limit (RL) for the sample.

Report Format: Data Usability Report

Project Name: NBHS
Project Number: 115058
Lab Number: L1517795
Report Date: 08/06/15

REFERENCES

97 EPA Test Methods (SW-846) with QC Requirements & Performance Standards for the Analysis of EPA SW-846 Methods under the Massachusetts Contingency Plan, WSC-CAM-IIA, IIB, IIIA, IIIB, IIIC, IIID, VA, VB, VC, VIA, VIB, VIIIA and VIIIB, July 2010.

LIMITATION OF LIABILITIES

Alpha Analytical performs services with reasonable care and diligence normal to the analytical testing laboratory industry. In the event of an error, the sole and exclusive responsibility of Alpha Analytical shall be to re-perform the work at it's own expense. In no event shall Alpha Analytical be held liable for any incidental, consequential or special damages, including but not limited to, damages in any way connected with the use of, interpretation of, information or analysis provided by Alpha Analytical.

We strongly urge our clients to comply with EPA protocol regarding sample volume, preservation, cooling, containers, sampling procedures, holding time and splitting of samples in the field.

Certification Information

Last revised December 16, 2014

The following analytes are not included in our NELAP Scope of Accreditation:

Westborough Facility
EPA 524.2: Acetone, 2-Butanone (Methyl ethyl ketone (MEK)), Tert-butyl alcohol, 2-Hexanone, Tetrahydrofuran, 1,3,5-Trichlorobenzene, 4-Methyl-2-pentanone (MIBK), Carbon disulfide, Diethyl ether.
EPA 8260C: 1,2,4,5-Tetramethylbenzene, 4-Ethyltoluene, Iodomethane (methyl iodide), Methyl methacrylate, Azobenzene.
EPA 8270D: 1-Methylnaphthalene, Dimethylnaphthalene,1,4-Diphenylhydrazine.
EPA 625: 4-Chloroaniline, 4-Methylphenol.
SM4500: Soil: Total Phosphorus, TKN, NO2, NO3.
EPA 9071: Total Petroleum Hydrocarbons, Oil & Grease.

Mansfield Facility
EPA 8270D: Biphenyl.
EPA 2540D: TSS
EPA TO-15: Halothane, 2,4,4-Trimethyl-2-pentene, 2,4,4-Trimethyl-1-pentene, Thiophene, 2-Methylthiophene, 3-Methylthiophene, 2-Ethylthiophene, 1,2,3-Trimethylbenzene, Indan, Indene, 1,2,4,5-Tetramethylbenzene, Benzothiophene, 1-Methylnaphthalene.

The following analytes are included in our Massachusetts DEP Scope of Accreditation, Westborough Facility:

Drinking Water
EPA 200.8: Sb,As,Ba,Be,Cd,Cr,Cu,Pb,Ni,Se,Tl; **EPA 200.7**: Ba,Be,Ca,Cd,Cr,Cu,Na; **EPA 245.1:** Mercury;
EPA 300.0: Nitrate-N, Fluoride, Sulfate; **EPA 353.2**: Nitrate-N, Nitrite-N; **SM4500NO3-F**: Nitrate-N, Nitrite-N; **SM4500F-C, SM4500CN-CE, EPA 180.1, SM2130B, SM4500Cl-D, SM2320B, SM2540C, SM4500H-B**
EPA 332: Perchlorate.
Microbiology: **SM9215B; SM9223-P/A, SM9223B-Colilert-QT, Enterolert-QT.**

Non-Potable Water
EPA 200.8: Al,Sb,As,Be,Cd,Cr,Cu,Pb,Mn,Ni,Se,Ag,Tl,Zn;
EPA 200.7: Al,Sb,As,Be,Cd,Ca,Cr,Co,Cu,Fe,Pb,Mg,Mn,Mo,Ni,K,Se,Ag,Na,Sr,Ti,Tl,V,Zn;
EPA 245.1, SM4500H,B, EPA 120.1, SM2510B, SM2540C, SM2340B, SM2320B, SM4500CL-E, SM4500F-BC, SM426C, SM4500NH3-BH, **EPA 350.1**: Ammonia-N, **LACHAT 10-107-06-1-B**: Ammonia-N, **SM4500NO3-F,**
EPA 353.2: Nitrate-N**, SM4500NH3-BC-NES, EPA 351.1, SM4500P-E, SM4500P-B, E, SM5220D, EPA 410.4, SM5210B, SM5310C, SM4500CL-D, EPA 1664, SM14 510AC, EPA 420.1, SM4500-CN-CE, SM2540D.**
EPA 624: Volatile Halocarbons & Aromatics,
EPA 608: Chlordane, Toxaphene, Aldrin, alpha-BHC, beta-BHC, gamma-BHC, delta-BHC, Dieldrin, DDD, DDE, DDT, Endosulfan I, Endosulfan II, Endosulfan sulfate, Endrin, Endrin Aldehyde, Heptachlor, Heptachlor Epoxide, PCBs
EPA 625: SVOC (Acid/Base/Neutral Extractables), **EPA 600/4-81-045**: PCB-Oil.
Microbiology: **SM9223B-Colilert-QT; Enterolert-QT, SM9222D-MF**.

For a complete listing of analytes and methods, please contact your Alpha Project Manager.

CHAIN OF CUSTODY

PAGE 1 OF 1

Date Rec'd in Lab: 7/30/15

ALPHA Job #: L1517795

ALPHA ANALYTICAL
8 Walkup Drive, Westboro, MA 01581, Tel: 508-898-9220
320 Forbes Blvd, Mansfield, MA 02048, Tel: 508-822-9300

Client Information

Client: TRC

Address: 650 Suffolk St

Phone: 978-656-5600

Email: ALEONARD@TRCSOLUTIONS.com
DSULLIVAN@ " "

Additional Project Information:

Project Information

Project Name: NBHS

Project Location: NEW BEDFORD MA

Project #: 115058

Project Manager: DAVE SULLIVAN

ALPHA Quote #:

Turn-Around Time

☑ Standard ☐ RUSH (only confirmed if pre-approved)

Date Due: 8/4/15

Report Information - Data Deliverables

☑ ADEx ☑ EMAIL

Billing Information

☐ Same as Client info PO #:

Regulatory Requirements & Project Information Requirements

☐ Yes ☐ No MA MCP Analytical Methods ☐ Yes ☐ No CT RCP Analytical Methods
☐ Yes ☐ No Matrix Spike Required on this SDG? (Required for MCP Inorganics)
☐ Yes ☐ No GW1 Standards (Info Required for Metals & EPH with Targets)
☐ Yes ☐ No NPDES RGP
☐ Other State /Fed Program _____ Criteria _____

ANALYSIS

VOC: ☑ 8260 ☐ 624 ☐ 524.2
SVOC: ☐ ABN ☐ PAH
METALS: ☐ MCP 13 ☐ MCP 14 ☐ RCP 15
METALS: ☐ RCRA5 ☐ RCRA8 ☐ PP13
EPH: ☐ Ranges & Targets ☐ Ranges Only
VPH: ☐ Ranges & Targets ☐ Ranges Only
☑ PCB ☐ PEST
TPH: ☐ Quant Only ☐ Fingerprint

SAMPLE INFO
Filtration
☐ Field
☐ Lab to do
Preservation
☐ Lab to do

ALPHA Lab ID (Lab Use Only)	Sample ID	Collection Date	Collection Time	Sample Matrix	Sampler Initials	VOC	PCB	Sample Comments	TOTAL # BOTTLES
17795-01	Influent - Tank	7/30/15	~~10:45~~ 11:15	GW	CO	✓	✓		
-02	Effluent - SP7	7/30/15	~~11:15~~ 10:45	GW	CO	✓	✓		
	Container Type					W	A		
	Preservative					B	A		

Container Type
P= Plastic
A= Amber glass
V= Vial
G= Glass
B= Bacteria cup
C= Cube
O= Other
E= Encore
D= BOD Bottle

Preservative
A= None
B= HCl
C= HNO_3
D= H_2SO_4
E= NaOH
F= MeOH
G= $NaHSO_4$
H = $Na_2S_2O_3$
I= Ascorbic Acid
J = NH_4Cl
K= Zn Acetate
O= Other

Relinquished By:	Date/Time	Received By:	Date/Time
[illegible] MAC	7/30/15 1200	[illegible] MAC	7-30-15 12:00
[illegible] MAC	7-30-15 1710	[illegible]	7/30/15 18:10

All samples submitted are subject to Alpha's Terms and Conditions. See reverse side.

FORM NO: 01-01 (rev. 12-Mar-2012)

7A
Volatile Organics CONTINUING CALIBRATION CHECK

Lab Name: Alpha Analytical Labs

SDG No.: L1517795

Instrument ID: Quimby.i Calibration Date: 01-AUG-2015 Time: 04:23

Lab File ID: 0801A01 Init. Calib. Date(s): 29-JUN-2 30-JUN-2

Sample No: 8260 CCAL Init. Calib. Times : 23:44 02:54

Compound	RRF	RRF	MIN RRF	%D	MAX %D	
dichlorodifluoromethane	.38134	.37509	.1	-2	20	
chloromethane	.44381	.33024	.1	-26	20	F
vinyl chloride	.31826	.27914	.1	-12	20	
bromomethane	.29635	.23884	.1	-19	20	
chloroethane	.24585	.21696	.1	-12	20	
trichlorofluoromethane	.52148	.53409	.1	2	20	
ethyl ether	.16213	.16522	.05	2	20	
acrolein	.03562	.02729	.05	-23	20	F
freon-113	.3082	.3097	.1	0	20	
acetone	.06504	.07168	.1	10	20	F
1,1,-dichloroethene	.31884	.29049	.1	-9	20	
tert-butyl alcohol	.00827	.01228	.05	48	20	F
iodomethane	.26954	.10083	.05	-63	20	F
methyl acetate	.14249	.15529	.01	9	20	
carbon disulfide	.84403	.68984	.1	-18	20	
methylene chloride	.35469	.34265	.1	-3	20	
acrylonitrile	.08287	.08429	.05	2	20	
methyl tert butyl ether	.57985	.56963	.1	-2	20	
Halothane	.23439	.22844	.05	-3	20	
trans-1,2-dichloroethene	.3354	.3152	.1	-6	20	
Diisopropyl Ether	1.1024	.92073	.05	-16	20	
1,1-dichloroethane	.62302	.59323	.2	-5	20	
vinyl acetate	.38294	.31713	.05	-17	20	
Ethyl-Tert-Butyl-Ether	.78612	.70856	.05	-10	20	
2-butanone	.07662	.08451	.1	10	20	F
2,2-dichloropropane	.28458	.26549	.05	-7	20	
ethyl acetate	.17441	.17676	.05	1	20	
cis-1,2-dichloroethene	.37156	.35589	.1	-4	20	
chloroform	.60482	.61628	.2	2	20	
bromochloromethane	.1409	.14335	.05	2	20	
tetrahydrofuran	.0553	.05053	.05	-9	20	
1,1,1-trichloroethane	.46817	.47192	.1	1	20	
cyclohexane	.67385	.65367	.01	-3	30	
1,1-dichloropropene	.47562	.47116	.05	-1	20	
carbontetrachloride	.34644	.34035	.1	-2	20	
Tertiary-Amyl Methyl Ether	.62364	.54584	.05	-12	20	
1,2-dichloroethane	.41052	.43711	.1	6	20	
benzene	1.4738	1.4096	.5	-4	20	

FORM VII MCP-8260-10

7A
CONTINUING CALIBRATION CHECK

Lab Name: Alpha Analytical Labs

SDG No.: L1517795

Instrument ID: Quimby.i Calibration Date: 01-AUG-2015 Time: 04:23

Lab File ID: 0801A01 Init. Calib. Date(s): 29-JUN-2 30-JUN-2

Sample No: 8260 CCAL Init. Calib. Times : 23:44 02:54

Compound	$\overline{RRF}$	RRF	MIN RRF	%D	MAX %D	
trichloroethene	.36239	.34815	.2	-4	20	
methyl cyclohexane	.64661	.68372	.01	6	30	
1,2-dichloropropane	.35819	.33203	.1	-7	20	
bromodichloromethane	.39742	.41651	.2	5	20	
1,4-dioxane	.00169	.00188	.05	11	20	F
dibromomethane	.15519	.16571	.05	7	20	
2-chloroethylvinyl ether	.11752	.06943	.05	-41	20	F
4-methyl-2-pentanone	.0737	.0736	.1	0	20	F
cis-1,3-dichloropropene	100	87.251	.2	-13	20	
toluene	1.1737	1.2085	.4	3	20	
ethyl-methacrylate	.38959	.36147	.01	-7	20	
trans-1,3-dichloropropene	100	91.797	.1	-8	20	
1,1,2-trichloroethane	.25885	.28365	.1	10	20	
2-hexanone	.14629	.15798	.1	8	20	
1,3-dichloropropane	.51247	.56871	.05	11	20	
tetrachloroethene	.44382	.47293	.2	7	20	
chlorodibromomethane	.2785	.31704	.1	14	20	
1,2-dibromoethane	.20925	.25378	.1	21	20	F
chlorobenzene	1.2531	1.3394	.5	7	20	
1,1,1,2-tetrachloroethane	.34609	.38427	.05	11	20	
ethyl benzene	2.2882	2.4974	.1	9	20	
p/m xylene	.88101	.96385	.1	9	20	
o xylene	.84003	.92814	.3	10	20	
styrene	1.3553	1.5242	.31	12	20	
isopropylbenzene	2.3230	2.5343	.1	9	20	
bromoform	.24744	.28557	.1	15	20	
1,4-dichlorobutane	1.0031	1.0074	.01	0	20	
1,1,2,2,-tetrachloroethane	.62421	.68527	.3	10	20	
1,2,3-trichloropropane	.47667	.54563	.05	14	20	
trans-1,4-dichloro-2-butene	.1409	.14171	.05	1	20	
n-propylbenzene	4.9577	5.4565	.05	10	20	
bromobenzene	.88592	.96726	.05	9	20	
4-ethyltoluene	2.1188	2.0540	.05	-3	20	
1,3,5-trimethybenzene	3.6133	4.0579	.05	12	20	
2-chlorotoluene	3.4257	3.7020	.05	8	20	
4-chorotoluene	3.1390	3.4371	.05	9	20	
tert-butylbenzene	3.0511	3.3062	.05	8	20	
1,2,4-trimethylbenzene	3.5953	4.0643	.05	13	20	

FORM VII MCP-8260-10

7A
CONTINUING CALIBRATION CHECK

Lab Name: Alpha Analytical Labs

SDG No.: L1517795

Instrument ID: Quimby.i Calibration Date: 01-AUG-2015 Time: 04:23

Lab File ID: 0801A01 Init. Calib. Date(s): 29-JUN-2 30-JUN-2

Sample No: 8260 CCAL Init. Calib. Times : 23:44 02:54

Compound	RRF	RRF	MIN RRF	%D	MAX %D
sec-butylbenzene	4.6128	4.9797	.05	8	20
p-isopropyltoluene	3.8608	4.2990	.05	11	20
1,3-dichlorobenzene	1.8744	2.036	.6	9	20
1,4-dichlorobenzene	1.8508	2.0423	.5	10	20
n-butylbenzene	4.2284	4.5841	.05	8	20
p-diethylbenzene	1.1209	1.1161	.05	0	20
1,2-dichlorobenzene	1.6673	1.8781	.4	13	20
1,2,4,5-tetramethylbenezene	1.6346	1.5877	.05	-3	20
1,2-dibromo-3-chloropropane	.07784	.09006	.05	16	20
1,3,5-trichlorobenzene	1.2271	1.3802	.01	12	30
1,2,4-trichlorobenzene	.87994	.97438	.2	11	20
hexachlorobutadiene	.52115	.59063	.05	13	20
naphthalene	1.6096	1.7004	.05	6	20
1,2,3-trichlorobenzene	.73418	.86817	.05	18	20
dibromofluoromethane	.22433	.22044	.05	-2	20
1,2-dichloroethane-d4	.25827	.2792	.05	8	20
toluene-d8	1.2231	1.2651	.05	3	20
4-bromofluorobenzene	.9568	.92258	.05	-4	20

FORM VII MCP-8260-10

ANALYTICAL REPORT

Lab Number:	L1519685
Client:	TRC Environmental Consultants Wannalancit Mills 650 Suffolk Street Lowell, MA 01854
ATTN:	David Sullivan
Phone:	(978) 656-3565
Project Name:	NBHS
Project Number:	115058
Report Date:	08/21/15

The original project report/data package is held by Alpha Analytical. This report/data package is paginated and should be reproduced only in its entirety. Alpha Analytical holds no responsibility for results and/or data that are not consistent with the original.

Certifications & Approvals: MA (M-MA086), NY (11148), CT (PH-0574), NH (2003), NJ NELAP (MA935), RI (LAO00065), ME (MA00086), PA (68-03671), VA (460195), MD (348), IL (200077), NC (666), TX (T104704476), DOD (L2217), USDA (Permit #P-330-11-00240).

Eight Walkup Drive, Westborough, MA 01581-1019
508-898-9220 (Fax) 508-898-9193 800-624-9220 - www.alphalab.com

Project Name: NBHS
Project Number: 115058

Lab Number: L1519685
Report Date: 08/21/15

Alpha Sample ID	Client ID	Matrix	Sample Location	Collection Date/Time	Receive Date
L1519685-01	INFLUENT	WATER	NEW BEDFORD, MA	08/14/15 10:00	08/14/15
L1519685-02	EFFLUENT	WATER	NEW BEDFORD, MA	08/14/15 11:30	08/14/15

Project Name: NBHS **Lab Number:** L1519685

Project Number: 115058 **Report Date:** 08/21/15

MADEP MCP Response Action Analytical Report Certification

This form provides certifications for all samples performed by MCP methods. Please refer to the Sample Results and Container Information sections of this report for specification of MCP methods used for each analysis. The following questions pertain only to MCP Analytical Methods.

An affirmative response to questions A through F is required for "Presumptive Certainty" status		
A	Were all samples received in a condition consistent with those described on the Chain-of-Custody, properly preserved (including temperature) in the field or laboratory, and prepared/analyzed within method holding times?	YES
B	Were the analytical method(s) and all associated QC requirements specified in the selected CAM protocol(s) followed?	YES
C	Were all required corrective actions and analytical response actions specified in the selected CAM protocol(s) implemented for all identified performance standard non-conformances?	YES
D	Does the laboratory report comply with all the reporting requirements specified in CAM VII A, "Quality Assurance and Quality Control Guidelines for the Acquisition and Reporting of Analytical Data?"	YES
E a.	VPH, EPH, and APH Methods only: Was each method conducted without significant modification(s)? (Refer to the individual method(s) for a list of significant modifications).	N/A
E b.	APH and TO-15 Methods only: Was the complete analyte list reported for each method?	N/A
F	Were all applicable CAM protocol QC and performance standard non-conformances identified and evaluated in a laboratory narrative (including all "No" responses to Questions A through E)?	YES

A response to questions G, H and I is required for "Presumptive Certainty" status		
G	Were the reporting limits at or below all CAM reporting limits specified in the selected CAM protocol(s)?	NO
H	Were all QC performance standards specified in the CAM protocol(s) achieved?	NO
I	Were results reported for the complete analyte list specified in the selected CAM protocol(s)?	YES

For any questions answered "No", please refer to the case narrative section on the following page(s).

Please note that sample matrix information is located in the Sample Results section of this report.

Project Name: NBHS
Project Number: 115058

Lab Number: L1519685
Report Date: 08/21/15

Case Narrative

The samples were received in accordance with the Chain of Custody and no significant deviations were encountered during the preparation or analysis unless otherwise noted. Sample Receipt, Container Information, and the Chain of Custody are located at the back of the report.

Results contained within this report relate only to the samples submitted under this Alpha Lab Number and meet all of the requirements of NELAC, for all NELAC accredited parameters. The data presented in this report is organized by parameter (i.e. VOC, SVOC, etc.). Sample specific Quality Control data (i.e. Surrogate Spike Recovery) is reported at the end of the target analyte list for each individual sample, followed by the Laboratory Batch Quality Control at the end of each parameter. Tentatively Identified Compounds (TICs), if requested, are reported for compounds identified to be present and are not part of the method/program Target Compound List, even if only a subset of the TCL are being reported. If a sample was re-analyzed or re-extracted due to a required quality control corrective action and if both sets of data are reported, the Laboratory ID of the re-analysis or re-extraction is designated with an "R" or "RE", respectively. When multiple Batch Quality Control elements are reported (e.g. more than one LCS), the associated samples for each element are noted in the grey shaded header line of each data table. Any Laboratory Batch, Sample Specific % recovery or RPD value that is outside the listed Acceptance Criteria is bolded in the report. All specific QC information is also incorporated in the Data Usability format of our Data Merger tool where it can be reviewed along with any associated usability implications. Soil/sediments, solids and tissues are reported on a dry weight basis unless otherwise noted. Definitions of all data qualifiers and acronyms used in this report are provided in the Glossary located at the back of the report.

In reference to questions H (CAM) or 4 (RCP) when "NO" is checked, the performance criteria for CAM and RCP methods allow for some quality control failures to occur and still be within method compliance. In these instances the specific failure is not narrated but noted in the associated QC table. The information is also incorporated in the Data Usability format of our Data Merger tool where it can be reviewed along with any associated usability implications.

Please see the associated ADEx data file for a comparison of laboratory reporting limits that were achieved with the regulatory Numerical Standards requested on the Chain of Custody.

HOLD POLICY
For samples submitted on hold, Alpha's policy is to hold samples (with the exception of Air canisters) free of charge for 21 calendar days from the date the project is completed. After 21 calendar days, we will dispose of all samples submitted including those put on hold unless you have contacted your Client Service Representative and made arrangements for Alpha to continue to hold the samples. Air canisters will be disposed after 3 business days from the date the project is completed.

Please contact Client Services at 800-624-9220 with any questions.

Project Name: NBHS **Lab Number:** L1519685
Project Number: 115058 **Report Date:** 08/21/15

Case Narrative (continued)

MCP Related Narratives

Volatile Organics

The Effluent (L1519685-02) results are greater than the Influent (L1519685-01) results. The sample containers were verified as being labeled correctly by the laboratory, and the reported results were confirmed by the screen analysis results.

In reference to question H:

The WG814222-1/-2 LCS/LCSD recoveries, associated with L1519685-01 and -02, are above the individual acceptance criteria for chloroethane (137%/132%), but within the overall method allowances. The results of the associated samples are reported; however, all positive detects are considered to have a potentially high bias for these compounds.

The initial calibration, associated with L1519685-01 and -02, did not meet the method required minimum response factor on the lowest calibration standard for 1,4-dioxane (0.00228), as well as the average response factor for acetone and 1,4-dioxane. In addition, a quadratic fit was utilized for carbon tetrachloride.

The continuing calibration standard, associated with L1519685-01 and -02, is outside the acceptance criteria for one compound; however, it is within overall method allowances. A copy of the continuing calibration standard is included as an addendum to this report.

PCBs

In reference to question G:

L1519685-01: The sample has elevated detection limits due to the dilution required by the elevated concentrations of target compounds in the sample; therefore, one or more of the target analytes did not achieve the requested CAM reporting limits.

I, the undersigned, attest under the pains and penalties of perjury that, to the best of my knowledge and belief and based upon my personal inquiry of those responsible for providing the information contained in this analytical report, such information is accurate and complete. This certificate of analysis is not complete unless this page accompanies any and all pages of this report.

Authorized Signature: Lisa Westerlind

Title: Technical Director/Representative Date: 08/21/15

ORGANICS

VOLATILES

Project Name: NBHS
Project Number: 115058
Lab Number: L1519685
Report Date: 08/21/15

SAMPLE RESULTS

Lab ID: L1519685-01
Client ID: INFLUENT
Sample Location: NEW BEDFORD, MA
Matrix: Water
Analytical Method: 97,8260C
Analytical Date: 08/21/15 08:19
Analyst: MM

Date Collected: 08/14/15 10:00
Date Received: 08/14/15
Field Prep: Not Specified

Parameter	Result	Qualifier	Units	RL	MDL	Dilution Factor
MCP Volatile Organics - Westborough Lab						
Methylene chloride	ND		ug/l	2.0	--	1
1,1-Dichloroethane	ND		ug/l	1.0	--	1
Chloroform	ND		ug/l	1.0	--	1
Carbon tetrachloride	ND		ug/l	1.0	--	1
1,2-Dichloropropane	ND		ug/l	1.0	--	1
Dibromochloromethane	ND		ug/l	1.0	--	1
1,1,2-Trichloroethane	ND		ug/l	1.0	--	1
Tetrachloroethene	ND		ug/l	1.0	--	1
Chlorobenzene	ND		ug/l	1.0	--	1
Trichlorofluoromethane	ND		ug/l	2.0	--	1
1,2-Dichloroethane	ND		ug/l	1.0	--	1
1,1,1-Trichloroethane	ND		ug/l	1.0	--	1
Bromodichloromethane	ND		ug/l	1.0	--	1
trans-1,3-Dichloropropene	ND		ug/l	0.50	--	1
cis-1,3-Dichloropropene	ND		ug/l	0.50	--	1
1,3-Dichloropropene, Total	ND		ug/l	0.50	--	1
1,1-Dichloropropene	ND		ug/l	2.0	--	1
Bromoform	ND		ug/l	2.0	--	1
1,1,2,2-Tetrachloroethane	ND		ug/l	1.0	--	1
Benzene	ND		ug/l	0.50	--	1
Toluene	ND		ug/l	1.0	--	1
Ethylbenzene	ND		ug/l	1.0	--	1
Chloromethane	ND		ug/l	2.0	--	1
Bromomethane	ND		ug/l	2.0	--	1
Vinyl chloride	17		ug/l	1.0	--	1
Chloroethane	ND		ug/l	2.0	--	1
1,1-Dichloroethene	ND		ug/l	1.0	--	1
trans-1,2-Dichloroethene	5.6		ug/l	1.0	--	1
Trichloroethene	3.8		ug/l	1.0	--	1
1,2-Dichlorobenzene	ND		ug/l	1.0	--	1

Project Name: NBHS **Lab Number:** L1519685

Project Number: 115058 **Report Date:** 08/21/15

SAMPLE RESULTS

Lab ID: L1519685-01 Date Collected: 08/14/15 10:00

Client ID: INFLUENT Date Received: 08/14/15

Sample Location: NEW BEDFORD, MA Field Prep: Not Specified

Parameter	Result	Qualifier	Units	RL	MDL	Dilution Factor
MCP Volatile Organics - Westborough Lab						
1,3-Dichlorobenzene	ND		ug/l	1.0	--	1
1,4-Dichlorobenzene	2.2		ug/l	1.0	--	1
Methyl tert butyl ether	ND		ug/l	2.0	--	1
p/m-Xylene	ND		ug/l	2.0	--	1
o-Xylene	ND		ug/l	1.0	--	1
Xylene (Total)	ND		ug/l	1.0	--	1
cis-1,2-Dichloroethene	12		ug/l	1.0	--	1
1,2-Dichloroethene (total)	18		ug/l	1.0	--	1
Dibromomethane	ND		ug/l	2.0	--	1
1,2,3-Trichloropropane	ND		ug/l	2.0	--	1
Styrene	ND		ug/l	1.0	--	1
Dichlorodifluoromethane	ND		ug/l	2.0	--	1
Acetone	ND		ug/l	5.0	--	1
Carbon disulfide	ND		ug/l	2.0	--	1
2-Butanone	ND		ug/l	5.0	--	1
4-Methyl-2-pentanone	ND		ug/l	5.0	--	1
2-Hexanone	ND		ug/l	5.0	--	1
Bromochloromethane	ND		ug/l	2.0	--	1
Tetrahydrofuran	ND		ug/l	2.0	--	1
2,2-Dichloropropane	ND		ug/l	2.0	--	1
1,2-Dibromoethane	ND		ug/l	2.0	--	1
1,3-Dichloropropane	ND		ug/l	2.0	--	1
1,1,1,2-Tetrachloroethane	ND		ug/l	1.0	--	1
Bromobenzene	ND		ug/l	2.0	--	1
n-Butylbenzene	ND		ug/l	2.0	--	1
sec-Butylbenzene	ND		ug/l	2.0	--	1
tert-Butylbenzene	ND		ug/l	2.0	--	1
o-Chlorotoluene	ND		ug/l	2.0	--	1
p-Chlorotoluene	ND		ug/l	2.0	--	1
1,2-Dibromo-3-chloropropane	ND		ug/l	2.0	--	1
Hexachlorobutadiene	ND		ug/l	0.60	--	1
Isopropylbenzene	ND		ug/l	2.0	--	1
p-Isopropyltoluene	ND		ug/l	2.0	--	1
Naphthalene	ND		ug/l	2.0	--	1
n-Propylbenzene	ND		ug/l	2.0	--	1
1,2,3-Trichlorobenzene	ND		ug/l	2.0	--	1
1,2,4-Trichlorobenzene	ND		ug/l	2.0	--	1
1,3,5-Trimethylbenzene	ND		ug/l	2.0	--	1
1,2,4-Trimethylbenzene	ND		ug/l	2.0	--	1

Project Name: NBHS **Lab Number:** L1519685

Project Number: 115058 **Report Date:** 08/21/15

SAMPLE RESULTS

Lab ID: L1519685-01 Date Collected: 08/14/15 10:00

Client ID: INFLUENT Date Received: 08/14/15

Sample Location: NEW BEDFORD, MA Field Prep: Not Specified

Parameter	Result	Qualifier	Units	RL	MDL	Dilution Factor
MCP Volatile Organics - Westborough Lab						
Ethyl ether	ND		ug/l	2.0	--	1
Isopropyl Ether	ND		ug/l	2.0	--	1
Ethyl-Tert-Butyl-Ether	ND		ug/l	2.0	--	1
Tertiary-Amyl Methyl Ether	ND		ug/l	2.0	--	1
1,4-Dioxane	ND		ug/l	250	--	1

Surrogate	% Recovery	Qualifier	Acceptance Criteria
1,2-Dichloroethane-d4	116		70-130
Toluene-d8	101		70-130
4-Bromofluorobenzene	112		70-130
Dibromofluoromethane	103		70-130

Project Name: NBHS
Project Number: 115058

Lab Number: L1519685
Report Date: 08/21/15

SAMPLE RESULTS

Lab ID: L1519685-02
Client ID: EFFLUENT
Sample Location: NEW BEDFORD, MA
Matrix: Water
Analytical Method: 97,8260C
Analytical Date: 08/21/15 08:52
Analyst: MM

Date Collected: 08/14/15 11:30
Date Received: 08/14/15
Field Prep: Not Specified

Parameter	Result	Qualifier	Units	RL	MDL	Dilution Factor
MCP Volatile Organics - Westborough Lab						
Methylene chloride	ND		ug/l	2.0	--	1
1,1-Dichloroethane	ND		ug/l	1.0	--	1
Chloroform	ND		ug/l	1.0	--	1
Carbon tetrachloride	ND		ug/l	1.0	--	1
1,2-Dichloropropane	ND		ug/l	1.0	--	1
Dibromochloromethane	ND		ug/l	1.0	--	1
1,1,2-Trichloroethane	ND		ug/l	1.0	--	1
Tetrachloroethene	ND		ug/l	1.0	--	1
Chlorobenzene	ND		ug/l	1.0	--	1
Trichlorofluoromethane	ND		ug/l	2.0	--	1
1,2-Dichloroethane	ND		ug/l	1.0	--	1
1,1,1-Trichloroethane	ND		ug/l	1.0	--	1
Bromodichloromethane	ND		ug/l	1.0	--	1
trans-1,3-Dichloropropene	ND		ug/l	0.50	--	1
cis-1,3-Dichloropropene	ND		ug/l	0.50	--	1
1,3-Dichloropropene, Total	ND		ug/l	0.50	--	1
1,1-Dichloropropene	ND		ug/l	2.0	--	1
Bromoform	ND		ug/l	2.0	--	1
1,1,2,2-Tetrachloroethane	ND		ug/l	1.0	--	1
Benzene	ND		ug/l	0.50	--	1
Toluene	ND		ug/l	1.0	--	1
Ethylbenzene	ND		ug/l	1.0	--	1
Chloromethane	ND		ug/l	2.0	--	1
Bromomethane	ND		ug/l	2.0	--	1
Vinyl chloride	ND		ug/l	1.0	--	1
Chloroethane	ND		ug/l	2.0	--	1
1,1-Dichloroethene	ND		ug/l	1.0	--	1
trans-1,2-Dichloroethene	28		ug/l	1.0	--	1
Trichloroethene	ND		ug/l	1.0	--	1
1,2-Dichlorobenzene	ND		ug/l	1.0	--	1

Project Name: NBHS **Lab Number:** L1519685

Project Number: 115058 **Report Date:** 08/21/15

SAMPLE RESULTS

Lab ID: L1519685-02 Date Collected: 08/14/15 11:30

Client ID: EFFLUENT Date Received: 08/14/15

Sample Location: NEW BEDFORD, MA Field Prep: Not Specified

Parameter	Result	Qualifier	Units	RL	MDL	Dilution Factor
MCP Volatile Organics - Westborough Lab						
1,3-Dichlorobenzene	ND		ug/l	1.0	--	1
1,4-Dichlorobenzene	ND		ug/l	1.0	--	1
Methyl tert butyl ether	ND		ug/l	2.0	--	1
p/m-Xylene	ND		ug/l	2.0	--	1
o-Xylene	ND		ug/l	1.0	--	1
Xylene (Total)	ND		ug/l	1.0	--	1
cis-1,2-Dichloroethene	29		ug/l	1.0	--	1
1,2-Dichloroethene (total)	57		ug/l	1.0	--	1
Dibromomethane	ND		ug/l	2.0	--	1
1,2,3-Trichloropropane	ND		ug/l	2.0	--	1
Styrene	ND		ug/l	1.0	--	1
Dichlorodifluoromethane	ND		ug/l	2.0	--	1
Acetone	ND		ug/l	5.0	--	1
Carbon disulfide	ND		ug/l	2.0	--	1
2-Butanone	ND		ug/l	5.0	--	1
4-Methyl-2-pentanone	ND		ug/l	5.0	--	1
2-Hexanone	ND		ug/l	5.0	--	1
Bromochloromethane	ND		ug/l	2.0	--	1
Tetrahydrofuran	ND		ug/l	2.0	--	1
2,2-Dichloropropane	ND		ug/l	2.0	--	1
1,2-Dibromoethane	ND		ug/l	2.0	--	1
1,3-Dichloropropane	ND		ug/l	2.0	--	1
1,1,1,2-Tetrachloroethane	ND		ug/l	1.0	--	1
Bromobenzene	ND		ug/l	2.0	--	1
n-Butylbenzene	ND		ug/l	2.0	--	1
sec-Butylbenzene	ND		ug/l	2.0	--	1
tert-Butylbenzene	ND		ug/l	2.0	--	1
o-Chlorotoluene	ND		ug/l	2.0	--	1
p-Chlorotoluene	ND		ug/l	2.0	--	1
1,2-Dibromo-3-chloropropane	ND		ug/l	2.0	--	1
Hexachlorobutadiene	ND		ug/l	0.60	--	1
Isopropylbenzene	ND		ug/l	2.0	--	1
p-Isopropyltoluene	ND		ug/l	2.0	--	1
Naphthalene	ND		ug/l	2.0	--	1
n-Propylbenzene	ND		ug/l	2.0	--	1
1,2,3-Trichlorobenzene	ND		ug/l	2.0	--	1
1,2,4-Trichlorobenzene	ND		ug/l	2.0	--	1
1,3,5-Trimethylbenzene	ND		ug/l	2.0	--	1
1,2,4-Trimethylbenzene	ND		ug/l	2.0	--	1

Project Name: NBHS **Lab Number:** L1519685

Project Number: 115058 **Report Date:** 08/21/15

SAMPLE RESULTS

Lab ID: L1519685-02 Date Collected: 08/14/15 11:30

Client ID: EFFLUENT Date Received: 08/14/15

Sample Location: NEW BEDFORD, MA Field Prep: Not Specified

Parameter	Result	Qualifier	Units	RL	MDL	Dilution Factor
MCP Volatile Organics - Westborough Lab						
Ethyl ether	ND		ug/l	2.0	--	1
Isopropyl Ether	ND		ug/l	2.0	--	1
Ethyl-Tert-Butyl-Ether	ND		ug/l	2.0	--	1
Tertiary-Amyl Methyl Ether	ND		ug/l	2.0	--	1
1,4-Dioxane	ND		ug/l	250	--	1

Surrogate	% Recovery	Qualifier	Acceptance Criteria
1,2-Dichloroethane-d4	116		70-130
Toluene-d8	102		70-130
4-Bromofluorobenzene	114		70-130
Dibromofluoromethane	105		70-130

Project Name: NBHS
Project Number: 115058

Lab Number: L1519685
Report Date: 08/21/15

Method Blank Analysis
Batch Quality Control

Analytical Method: 97,8260C
Analytical Date: 08/21/15 05:37
Analyst: MM

Parameter	Result	Qualifier	Units	RL	MDL
MCP Volatile Organics - Westborough Lab for sample(s): 01-02 Batch: WG814222-3					
Methylene chloride	ND		ug/l	2.0	--
1,1-Dichloroethane	ND		ug/l	1.0	--
Chloroform	ND		ug/l	1.0	--
Carbon tetrachloride	ND		ug/l	1.0	--
1,2-Dichloropropane	ND		ug/l	1.0	--
Dibromochloromethane	ND		ug/l	1.0	--
1,1,2-Trichloroethane	ND		ug/l	1.0	--
Tetrachloroethene	ND		ug/l	1.0	--
Chlorobenzene	ND		ug/l	1.0	--
Trichlorofluoromethane	ND		ug/l	2.0	--
1,2-Dichloroethane	ND		ug/l	1.0	--
1,1,1-Trichloroethane	ND		ug/l	1.0	--
Bromodichloromethane	ND		ug/l	1.0	--
trans-1,3-Dichloropropene	ND		ug/l	0.50	--
cis-1,3-Dichloropropene	ND		ug/l	0.50	--
1,3-Dichloropropene, Total	ND		ug/l	0.50	--
1,1-Dichloropropene	ND		ug/l	2.0	--
Bromoform	ND		ug/l	2.0	--
1,1,2,2-Tetrachloroethane	ND		ug/l	1.0	--
Benzene	ND		ug/l	0.50	--
Toluene	ND		ug/l	1.0	--
Ethylbenzene	ND		ug/l	1.0	--
Chloromethane	ND		ug/l	2.0	--
Bromomethane	ND		ug/l	2.0	--
Vinyl chloride	ND		ug/l	1.0	--
Chloroethane	ND		ug/l	2.0	--
1,1-Dichloroethene	ND		ug/l	1.0	--
trans-1,2-Dichloroethene	ND		ug/l	1.0	--
Trichloroethene	ND		ug/l	1.0	--

Project Name: NBHS
Project Number: 115058

Lab Number: L1519685
Report Date: 08/21/15

Method Blank Analysis
Batch Quality Control

Analytical Method: 97,8260C
Analytical Date: 08/21/15 05:37
Analyst: MM

Parameter	Result	Qualifier	Units	RL	MDL
MCP Volatile Organics - Westborough Lab for sample(s): 01-02 Batch: WG814222-3					
1,2-Dichlorobenzene	ND		ug/l	1.0	--
1,3-Dichlorobenzene	ND		ug/l	1.0	--
1,4-Dichlorobenzene	ND		ug/l	1.0	--
Methyl tert butyl ether	ND		ug/l	2.0	--
p/m-Xylene	ND		ug/l	2.0	--
o-Xylene	ND		ug/l	1.0	--
Xylene (Total)	ND		ug/l	1.0	--
cis-1,2-Dichloroethene	ND		ug/l	1.0	--
1,2-Dichloroethene (total)	ND		ug/l	1.0	--
Dibromomethane	ND		ug/l	2.0	--
1,2,3-Trichloropropane	ND		ug/l	2.0	--
Styrene	ND		ug/l	1.0	--
Dichlorodifluoromethane	ND		ug/l	2.0	--
Acetone	ND		ug/l	5.0	--
Carbon disulfide	ND		ug/l	2.0	--
2-Butanone	ND		ug/l	5.0	--
4-Methyl-2-pentanone	ND		ug/l	5.0	--
2-Hexanone	ND		ug/l	5.0	--
Bromochloromethane	ND		ug/l	2.0	--
Tetrahydrofuran	ND		ug/l	2.0	--
2,2-Dichloropropane	ND		ug/l	2.0	--
1,2-Dibromoethane	ND		ug/l	2.0	--
1,3-Dichloropropane	ND		ug/l	2.0	--
1,1,1,2-Tetrachloroethane	ND		ug/l	1.0	--
Bromobenzene	ND		ug/l	2.0	--
n-Butylbenzene	ND		ug/l	2.0	--
sec-Butylbenzene	ND		ug/l	2.0	--
tert-Butylbenzene	ND		ug/l	2.0	--
o-Chlorotoluene	ND		ug/l	2.0	--

Project Name: NBHS
Project Number: 115058

Lab Number: L1519685
Report Date: 08/21/15

Method Blank Analysis
Batch Quality Control

Analytical Method: 97,8260C
Analytical Date: 08/21/15 05:37
Analyst: MM

Parameter	Result	Qualifier	Units	RL	MDL
MCP Volatile Organics - Westborough Lab for sample(s): 01-02 Batch: WG814222-3					
p-Chlorotoluene	ND		ug/l	2.0	--
1,2-Dibromo-3-chloropropane	ND		ug/l	2.0	--
Hexachlorobutadiene	ND		ug/l	0.60	--
Isopropylbenzene	ND		ug/l	2.0	--
p-Isopropyltoluene	ND		ug/l	2.0	--
Naphthalene	ND		ug/l	2.0	--
n-Propylbenzene	ND		ug/l	2.0	--
1,2,3-Trichlorobenzene	ND		ug/l	2.0	--
1,2,4-Trichlorobenzene	ND		ug/l	2.0	--
1,3,5-Trimethylbenzene	ND		ug/l	2.0	--
1,2,4-Trimethylbenzene	ND		ug/l	2.0	--
Ethyl ether	ND		ug/l	2.0	--
Isopropyl Ether	ND		ug/l	2.0	--
Ethyl-Tert-Butyl-Ether	ND		ug/l	2.0	--
Tertiary-Amyl Methyl Ether	ND		ug/l	2.0	--
1,4-Dioxane	ND		ug/l	250	--

Surrogate	%Recovery	Qualifier	Acceptance Criteria
1,2-Dichloroethane-d4	112		70-130
Toluene-d8	101		70-130
4-Bromofluorobenzene	115		70-130
Dibromofluoromethane	103		70-130

Lab Control Sample Analysis
Batch Quality Control

Project Name: NBHS
Project Number: 115058

Lab Number: L1519685
Report Date: 08/21/15

Parameter	LCS %Recovery	Qual	LCSD %Recovery	Qual	%Recovery Limits	RPD	Qual	RPD Limits
MCP Volatile Organics - Westborough Lab Associated sample(s): 01-02 Batch: WG814222-1 WG814222-2								
Methylene chloride	109		106		70-130	3		20
1,1-Dichloroethane	120		116		70-130	3		20
Chloroform	116		111		70-130	4		20
Carbon tetrachloride	114		114		70-130	0		20
1,2-Dichloropropane	109		105		70-130	4		20
Dibromochloromethane	89		88		70-130	1		20
1,1,2-Trichloroethane	105		102		70-130	3		20
Tetrachloroethene	101		97		70-130	4		20
Chlorobenzene	106		101		70-130	5		20
Trichlorofluoromethane	123		121		70-130	2		20
1,2-Dichloroethane	117		114		70-130	3		20
1,1,1-Trichloroethane	110		107		70-130	3		20
Bromodichloromethane	111		109		70-130	2		20
trans-1,3-Dichloropropene	95		94		70-130	1		20
cis-1,3-Dichloropropene	105		102		70-130	3		20
1,1-Dichloropropene	116		111		70-130	4		20
Bromoform	76		76		70-130	0		20
1,1,2,2-Tetrachloroethane	102		100		70-130	2		20
Benzene	110		105		70-130	5		20
Toluene	106		103		70-130	3		20
Ethylbenzene	114		109		70-130	4		20

Lab Control Sample Analysis
Batch Quality Control

Project Name: NBHS
Project Number: 115058

Lab Number: L1519685
Report Date: 08/21/15

Parameter	LCS %Recovery	Qual	LCSD %Recovery	Qual	%Recovery Limits	RPD	Qual	RPD Limits
MCP Volatile Organics - Westborough Lab Associated sample(s): 01-02 Batch: WG814222-1 WG814222-2								
Chloromethane	115		110		70-130	4		20
Bromomethane	106		101		70-130	5		20
Vinyl chloride	117		114		70-130	3		20
Chloroethane	**137**	Q	**132**	Q	70-130	4		20
1,1-Dichloroethene	99		95		70-130	4		20
trans-1,2-Dichloroethene	106		102		70-130	4		20
Trichloroethene	109		104		70-130	5		20
1,2-Dichlorobenzene	103		101		70-130	2		20
1,3-Dichlorobenzene	100		98		70-130	2		20
1,4-Dichlorobenzene	101		99		70-130	2		20
Methyl tert butyl ether	125		121		70-130	3		20
p/m-Xylene	110		106		70-130	4		20
o-Xylene	115		110		70-130	4		20
cis-1,2-Dichloroethene	103		100		70-130	3		20
Dibromomethane	105		101		70-130	4		20
1,2,3-Trichloropropane	107		105		70-130	2		20
Styrene	114		110		70-130	4		20
Dichlorodifluoromethane	101		96		70-130	5		20
Acetone	125		123		70-130	2		20
Carbon disulfide	86		84		70-130	2		20
2-Butanone	111		106		70-130	5		20

Lab Control Sample Analysis
Batch Quality Control

Project Name: NBHS
Project Number: 115058

Lab Number: L1519685
Report Date: 08/21/15

Parameter	LCS %Recovery	Qual	LCSD %Recovery	Qual	%Recovery Limits	RPD	Qual	RPD Limits
MCP Volatile Organics - Westborough Lab Associated sample(s): 01-02 Batch: WG814222-1 WG814222-2								
4-Methyl-2-pentanone	104		101		70-130	3		20
2-Hexanone	115		113		70-130	2		20
Bromochloromethane	102		97		70-130	5		20
Tetrahydrofuran	115		113		70-130	2		20
2,2-Dichloropropane	84		82		70-130	2		20
1,2-Dibromoethane	101		98		70-130	3		20
1,3-Dichloropropane	110		106		70-130	4		20
1,1,1,2-Tetrachloroethane	87		85		70-130	2		20
Bromobenzene	101		99		70-130	2		20
n-Butylbenzene	103		100		70-130	3		20
sec-Butylbenzene	107		103		70-130	4		20
tert-Butylbenzene	105		102		70-130	3		20
o-Chlorotoluene	112		108		70-130	4		20
p-Chlorotoluene	112		108		70-130	4		20
1,2-Dibromo-3-chloropropane	80		83		70-130	4		20
Hexachlorobutadiene	94		92		70-130	2		20
Isopropylbenzene	110		106		70-130	4		20
p-Isopropyltoluene	102		100		70-130	2		20
Naphthalene	85		83		70-130	2		20
n-Propylbenzene	114		111		70-130	3		20
1,2,3-Trichlorobenzene	90		88		70-130	2		20

Lab Control Sample Analysis
Batch Quality Control

Project Name: NBHS
Project Number: 115058

Lab Number: L1519685
Report Date: 08/21/15

Parameter	LCS %Recovery	Qual	LCSD %Recovery	Qual	%Recovery Limits	RPD	Qual	RPD Limits
MCP Volatile Organics - Westborough Lab Associated sample(s): 01-02 Batch: WG814222-1 WG814222-2								
1,2,4-Trichlorobenzene	89		87		70-130	2		20
1,3,5-Trimethylbenzene	109		106		70-130	3		20
1,2,4-Trimethylbenzene	103		101		70-130	2		20
Ethyl ether	122		116		70-130	5		20
Isopropyl Ether	127		123		70-130	3		20
Ethyl-Tert-Butyl-Ether	108		106		70-130	2		20
Tertiary-Amyl Methyl Ether	99		96		70-130	3		20
1,4-Dioxane	107		98		70-130	9		20

Surrogate	LCS %Recovery	Qual	LCSD %Recovery	Qual	Acceptance Criteria
1,2-Dichloroethane-d4	111		110		70-130
Toluene-d8	102		101		70-130
4-Bromofluorobenzene	104		105		70-130
Dibromofluoromethane	106		104		70-130

PCBS

Project Name: NBHS
Project Number: 115058
Lab Number: L1519685
Report Date: 08/21/15

SAMPLE RESULTS

Lab ID:	L1519685-01	D	Date Collected:	08/14/15 10:00
Client ID:	INFLUENT		Date Received:	08/14/15
Sample Location:	NEW BEDFORD, MA		Field Prep:	Not Specified
Matrix:	Water		Extraction Method:	EPA 3510C
Analytical Method:	97,8082A		Extraction Date:	08/19/15 22:06
Analytical Date:	08/21/15 12:42		Cleanup Method:	EPA 3665A
Analyst:	JT		Cleanup Date:	08/20/15
			Cleanup Method:	EPA 3660B
			Cleanup Date:	08/20/15

Parameter	Result	Qualifier	Units	RL	MDL	Dilution Factor	Column
MCP Polychlorinated Biphenyls - Westborough Lab							
Aroclor 1016	ND		ug/l	1.25	--	5	A
Aroclor 1221	ND		ug/l	1.25	--	5	A
Aroclor 1232	ND		ug/l	1.25	--	5	A
Aroclor 1242	ND		ug/l	1.25	--	5	A
Aroclor 1248	ND		ug/l	1.25	--	5	A
Aroclor 1254	10.0		ug/l	1.25	--	5	B
Aroclor 1260	ND		ug/l	1.25	--	5	A
Aroclor 1262	ND		ug/l	1.25	--	5	A
Aroclor 1268	ND		ug/l	1.25	--	5	A
PCBs, Total	10.0		ug/l	1.25	--	5	A

Surrogate	% Recovery	Qualifier	Acceptance Criteria	Column
2,4,5,6-Tetrachloro-m-xylene	81		30-150	A
Decachlorobiphenyl	77		30-150	A
2,4,5,6-Tetrachloro-m-xylene	79		30-150	B
Decachlorobiphenyl	83		30-150	B

Project Name: NBHS
Project Number: 115058
Lab Number: L1519685
Report Date: 08/21/15

SAMPLE RESULTS

Lab ID:	L1519685-02	Date Collected:	08/14/15 11:30
Client ID:	EFFLUENT	Date Received:	08/14/15
Sample Location:	NEW BEDFORD, MA	Field Prep:	Not Specified
Matrix:	Water	Extraction Method:	EPA 3510C
Analytical Method:	97,8082A	Extraction Date:	08/19/15 22:06
Analytical Date:	08/21/15 06:37	Cleanup Method:	EPA 3665A
Analyst:	JT	Cleanup Date:	08/20/15
		Cleanup Method:	EPA 3660B
		Cleanup Date:	08/20/15

Parameter	Result	Qualifier	Units	RL	MDL	Dilution Factor	Column
MCP Polychlorinated Biphenyls - Westborough Lab							
Aroclor 1016	ND		ug/l	0.250	--	1	A
Aroclor 1221	ND		ug/l	0.250	--	1	A
Aroclor 1232	ND		ug/l	0.250	--	1	A
Aroclor 1242	ND		ug/l	0.250	--	1	A
Aroclor 1248	ND		ug/l	0.250	--	1	A
Aroclor 1254	ND		ug/l	0.250	--	1	A
Aroclor 1260	ND		ug/l	0.250	--	1	A
Aroclor 1262	ND		ug/l	0.250	--	1	A
Aroclor 1268	ND		ug/l	0.250	--	1	A
PCBs, Total	ND		ug/l	0.250	--	1	A

Surrogate	% Recovery	Qualifier	Acceptance Criteria	Column
2,4,5,6-Tetrachloro-m-xylene	83		30-150	A
Decachlorobiphenyl	64		30-150	A
2,4,5,6-Tetrachloro-m-xylene	86		30-150	B
Decachlorobiphenyl	75		30-150	B

Project Name: NBHS

Project Number: 115058

Lab Number: L1519685

Report Date: 08/21/15

Method Blank Analysis
Batch Quality Control

Analytical Method: 97,8082A
Analytical Date: 08/20/15 12:37
Analyst: JT

Extraction Method: EPA 3510C
Extraction Date: 08/19/15 22:06
Cleanup Method: EPA 3665A
Cleanup Date: 08/20/15
Cleanup Method: EPA 3660B
Cleanup Date: 08/20/15

Parameter	Result	Qualifier	Units	RL	MDL	Column
MCP Polychlorinated Biphenyls - Westborough Lab for sample(s): 01-02 Batch: WG813680-1						
Aroclor 1016	ND		ug/l	0.250	--	A
Aroclor 1221	ND		ug/l	0.250	--	A
Aroclor 1232	ND		ug/l	0.250	--	A
Aroclor 1242	ND		ug/l	0.250	--	A
Aroclor 1248	ND		ug/l	0.250	--	A
Aroclor 1254	ND		ug/l	0.250	--	A
Aroclor 1260	ND		ug/l	0.250	--	A
Aroclor 1262	ND		ug/l	0.250	--	A
Aroclor 1268	ND		ug/l	0.250	--	A
PCBs, Total	ND		ug/l	0.250	--	A

Surrogate	%Recovery	Qualifier	Acceptance Criteria	Column
2,4,5,6-Tetrachloro-m-xylene	76		30-150	A
Decachlorobiphenyl	68		30-150	A
2,4,5,6-Tetrachloro-m-xylene	74		30-150	B
Decachlorobiphenyl	91		30-150	B

Lab Control Sample Analysis
Batch Quality Control

Project Name: NBHS
Project Number: 115058

Lab Number: L1519685
Report Date: 08/21/15

Parameter	LCS %Recovery	Qual	LCSD %Recovery	Qual	%Recovery Limits	RPD	Qual	RPD Limits	Column
MCP Polychlorinated Biphenyls - Westborough Lab Associated sample(s): 01-02 Batch: WG813680-2 WG813680-3									
Aroclor 1016	103		99		40-140	4		20	A
Aroclor 1260	106		107		40-140	1		20	A

Surrogate	LCS %Recovery	Qual	LCSD %Recovery	Qual	Acceptance Criteria	Column
2,4,5,6-Tetrachloro-m-xylene	81		76		30-150	A
Decachlorobiphenyl	75		80		30-150	A
2,4,5,6-Tetrachloro-m-xylene	75		71		30-150	B
Decachlorobiphenyl	92		95		30-150	B

Project Name: NBHS
Project Number: 115058

Lab Number: L1519685
Report Date: 08/21/15

Sample Receipt and Container Information

Were project specific reporting limits specified? YES

Reagent H2O Preserved Vials Frozen on: NA

Cooler Information Custody Seal

Cooler	
A	Absent

Container Information

Container ID	Container Type	Cooler	pH	Temp deg C	Pres	Seal	Analysis(*)
L1519685-01A	Vial HCl preserved	A	N/A	2.7	Y	Absent	MCP-8260-10(14)
L1519685-01B	Vial HCl preserved	A	N/A	2.7	Y	Absent	MCP-8260-10(14)
L1519685-01C	Vial HCl preserved	A	N/A	2.7	Y	Absent	MCP-8260-10(14)
L1519685-01D	Amber 1000ml unpreserved	A	7	2.7	Y	Absent	MCP-8082-10(365)
L1519685-01E	Amber 1000ml unpreserved	A	7	2.7	Y	Absent	MCP-8082-10(365)
L1519685-02A	Vial HCl preserved	A	N/A	2.7	Y	Absent	MCP-8260-10(14)
L1519685-02B	Vial HCl preserved	A	N/A	2.7	Y	Absent	MCP-8260-10(14)
L1519685-02C	Vial HCl preserved	A	N/A	2.7	Y	Absent	MCP-8260-10(14)
L1519685-02D	Amber 1000ml unpreserved	A	7	2.7	Y	Absent	MCP-8082-10(365)
L1519685-02E	Amber 1000ml unpreserved	A	7	2.7	Y	Absent	MCP-8082-10(365)

*Values in parentheses indicate holding time in days

Project Name:	NBHS	**Lab Number:**	L1519685
Project Number:	115058	**Report Date:**	08/21/15

GLOSSARY

Acronyms

EDL	- Estimated Detection Limit: This value represents the level to which target analyte concentrations are reported as estimated values, when those target analyte concentrations are quantified below the reporting limit (RL). The EDL includes any adjustments from dilutions, concentrations or moisture content, where applicable. The use of EDLs is specific to the analysis of PAHs using Solid-Phase Microextraction (SPME).
EPA	- Environmental Protection Agency.
LCS	- Laboratory Control Sample: A sample matrix, free from the analytes of interest, spiked with verified known amounts of analytes or a material containing known and verified amounts of analytes.
LCSD	- Laboratory Control Sample Duplicate: Refer to LCS.
LFB	- Laboratory Fortified Blank: A sample matrix, free from the analytes of interest, spiked with verified known amounts of analytes or a material containing known and verified amounts of analytes.
MDL	- Method Detection Limit: This value represents the level to which target analyte concentrations are reported as estimated values, when those target analyte concentrations are quantified below the reporting limit (RL). The MDL includes any adjustments from dilutions, concentrations or moisture content, where applicable.
MS	- Matrix Spike Sample: A sample prepared by adding a known mass of target analyte to a specified amount of matrix sample for which an independent estimate of target analyte concentration is available.
MSD	- Matrix Spike Sample Duplicate: Refer to MS.
NA	- Not Applicable.
NC	- Not Calculated: Term is utilized when one or more of the results utilized in the calculation are non-detect at the parameter's reporting unit.
NI	- Not Ignitable.
NP	- Non-Plastic: Term is utilized for the analysis of Atterberg Limits in soil.
RL	- Reporting Limit: The value at which an instrument can accurately measure an analyte at a specific concentration. The RL includes any adjustments from dilutions, concentrations or moisture content, where applicable.
RPD	- Relative Percent Difference: The results from matrix and/or matrix spike duplicates are primarily designed to assess the precision of analytical results in a given matrix and are expressed as relative percent difference (RPD). Values which are less than five times the reporting limit for any individual parameter are evaluated by utilizing the absolute difference between the values; although the RPD value will be provided in the report.
SRM	- Standard Reference Material: A reference sample of a known or certified value that is of the same or similar matrix as the associated field samples.
TIC	- Tentatively Identified Compound: A compound that has been identified to be present and is not part of the target compound list (TCL) for the method and/or program. All TICs are qualitatively identified and reported as estimated concentrations.

Footnotes

1	- The reference for this analyte should be considered modified since this analyte is absent from the target analyte list of the original method.

Terms

Total: With respect to Organic analyses, a 'Total' result is defined as the summation of results for individual isomers or Aroclors. If a 'Total' result is requested, the results of its individual components will also be reported. This is applicable to 'Total' results for methods 8260, 8081 and 8082.

Analytical Method: Both the document from which the method originates and the analytical reference method. (Example: EPA 8260B is shown as 1,8260B.) The codes for the reference method documents are provided in the References section of the Addendum.

Data Qualifiers

A	- Spectra identified as "Aldol Condensation Product".
B	- The analyte was detected above the reporting limit in the associated method blank. Flag only applies to associated field samples that have detectable concentrations of the analyte at less than ten times (10x) the concentration found in the blank. For MCP-related projects, flag only applies to associated field samples that have detectable concentrations of the analyte at less than ten times (10x) the concentration found in the blank. For DOD-related projects, flag only applies to associated field samples that have detectable concentrations of the analyte at less than ten times (10x) the concentration found in the blank AND the analyte was detected above one-half the reporting limit (or above the reporting limit for common lab contaminants) in the associated method blank. For NJ-Air-related projects, flag only applies to associated field samples that have detectable concentrations of the analyte above the reporting limit. For NJ-related projects (excluding Air), flag only applies to associated field samples that have detectable concentrations of the analyte, which was detected above the reporting limit in the associated method blank or above five times the reporting limit for common lab contaminants (Phthalates, Acetone, Methylene Chloride, 2-Butanone).
C	- Co-elution: The target analyte co-elutes with a known lab standard (i.e. surrogate, internal standards, etc.) for co-extracted analyses.

Report Format: Data Usability Report

Project Name: NBHS **Lab Number:** L1519685

Project Number: 115058 **Report Date:** 08/21/15

Data Qualifiers

D - Concentration of analyte was quantified from diluted analysis. Flag only applies to field samples that have detectable concentrations of the analyte.

E - Concentration of analyte exceeds the range of the calibration curve and/or linear range of the instrument.

G - The concentration may be biased high due to matrix interferences (i.e, co-elution) with non-target compound(s). The result should be considered estimated.

H - The analysis of pH was performed beyond the regulatory-required holding time of 15 minutes from the time of sample collection.

I - The lower value for the two columns has been reported due to obvious interference.

M - Reporting Limit (RL) exceeds the MCP CAM Reporting Limit for this analyte.

NJ - Presumptive evidence of compound. This represents an estimated concentration for Tentatively Identified Compounds (TICs), where the identification is based on a mass spectral library search.

P - The RPD between the results for the two columns exceeds the method-specified criteria.

Q - The quality control sample exceeds the associated acceptance criteria. For DOD-related projects, LCS and/or Continuing Calibration Standard exceedences are also qualified on all associated sample results. Note: This flag is not applicable for matrix spike recoveries when the sample concentration is greater than 4x the spike added or for batch duplicate RPD when the sample concentrations are less than 5x the RL. (Metals only.)

R - Analytical results are from sample re-analysis.

RE - Analytical results are from sample re-extraction.

S - Analytical results are from modified screening analysis.

J - Estimated value. This represents an estimated concentration for Tentatively Identified Compounds (TICs).

ND - Not detected at the reporting limit (RL) for the sample.

Report Format: Data Usability Report

Project Name: NBHS
Project Number: 115058
Lab Number: L1519685
Report Date: 08/21/15

REFERENCES

97 EPA Test Methods (SW-846) with QC Requirements & Performance Standards for the Analysis of EPA SW-846 Methods under the Massachusetts Contingency Plan, WSC-CAM-IIA, IIB, IIIA, IIIB, IIIC, IIID, VA, VB, VC, VIA, VIB, VIIIA and VIIIB, July 2010.

LIMITATION OF LIABILITIES

Alpha Analytical performs services with reasonable care and diligence normal to the analytical testing laboratory industry. In the event of an error, the sole and exclusive responsibility of Alpha Analytical shall be to re-perform the work at it's own expense. In no event shall Alpha Analytical be held liable for any incidental, consequential or special damages, including but not limited to, damages in any way connected with the use of, interpretation of, information or analysis provided by Alpha Analytical.

We strongly urge our clients to comply with EPA protocol regarding sample volume, preservation, cooling, containers, sampling procedures, holding time and splitting of samples in the field.

Certification Information

Last revised December 16, 2014

The following analytes are not included in our NELAP Scope of Accreditation:

Westborough Facility
EPA 524.2: Acetone, 2-Butanone (Methyl ethyl ketone (MEK)), Tert-butyl alcohol, 2-Hexanone, Tetrahydrofuran, 1,3,5-Trichlorobenzene, 4-Methyl-2-pentanone (MIBK), Carbon disulfide, Diethyl ether.
EPA 8260C: 1,2,4,5-Tetramethylbenzene, 4-Ethyltoluene, Iodomethane (methyl iodide), Methyl methacrylate, Azobenzene.
EPA 8270D: 1-Methylnaphthalene, Dimethylnaphthalene,1,4-Diphenylhydrazine.
EPA 625: 4-Chloroaniline, 4-Methylphenol.
SM4500: Soil: Total Phosphorus, TKN, NO2, NO3.
EPA 9071: Total Petroleum Hydrocarbons, Oil & Grease.

Mansfield Facility
EPA 8270D: Biphenyl.
EPA 2540D: TSS
EPA TO-15: Halothane, 2,4,4-Trimethyl-2-pentene, 2,4,4-Trimethyl-1-pentene, Thiophene, 2-Methylthiophene, 3-Methylthiophene, 2-Ethylthiophene, 1,2,3-Trimethylbenzene, Indan, Indene, 1,2,4,5-Tetramethylbenzene, Benzothiophene, 1-Methylnaphthalene.

The following analytes are included in our Massachusetts DEP Scope of Accreditation, Westborough Facility:

Drinking Water
EPA 200.8: Sb,As,Ba,Be,Cd,Cr,Cu,Pb,Ni,Se,Tl; **EPA 200.7**: Ba,Be,Ca,Cd,Cr,Cu,Na; **EPA 245.1:** Mercury;
EPA 300.0: Nitrate-N, Fluoride, Sulfate; **EPA 353.2**: Nitrate-N, Nitrite-N; **SM4500NO3-F**: Nitrate-N, Nitrite-N; **SM4500F-C, SM4500CN-CE, EPA 180.1, SM2130B, SM4500Cl-D, SM2320B, SM2540C, SM4500H-B**
EPA 332: Perchlorate.
Microbiology: **SM9215B; SM9223-P/A, SM9223B-Colilert-QT, Enterolert-QT.**

Non-Potable Water
EPA 200.8: Al,Sb,As,Be,Cd,Cr,Cu,Pb,Mn,Ni,Se,Ag,Tl,Zn;
EPA 200.7: Al,Sb,As,Be,Cd,Ca,Cr,Co,Cu,Fe,Pb,Mg,Mn,Mo,Ni,K,Se,Ag,Na,Sr,Ti,Tl,V,Zn;
EPA 245.1, SM4500H,B, EPA 120.1, SM2510B, SM2540C, SM2340B, SM2320B, SM4500CL-E, SM4500F-BC, SM426C, SM4500NH3-BH, **EPA 350.1**: Ammonia-N, **LACHAT 10-107-06-1-B**: Ammonia-N, **SM4500NO3-F,**
EPA 353.2: Nitrate-N**, SM4500NH3-BC-NES, EPA 351.1, SM4500P-E, SM4500P-B, E, SM5220D, EPA 410.4, SM5210B, SM5310C, SM4500CL-D, EPA 1664, SM14 510AC, EPA 420.1, SM4500-CN-CE, SM2540D.**
EPA 624: Volatile Halocarbons & Aromatics,
EPA 608: Chlordane, Toxaphene, Aldrin, alpha-BHC, beta-BHC, gamma-BHC, delta-BHC, Dieldrin, DDD, DDE, DDT, Endosulfan I, Endosulfan II, Endosulfan sulfate, Endrin, Endrin Aldehyde, Heptachlor, Heptachlor Epoxide, PCBs
EPA 625: SVOC (Acid/Base/Neutral Extractables), **EPA 600/4-81-045**: PCB-Oil.
Microbiology: **SM9223B-Colilert-QT; Enterolert-QT, SM9222D-MF**.

For a complete listing of analytes and methods, please contact your Alpha Project Manager.

CHAIN OF CUSTODY

PAGE 1 OF 1

Date Rec'd in Lab: 8/14/15

ALPHA Job #: L1519685

ALPHA ANALYTICAL
8 Walkup Drive
Westboro, MA 01581
Tel: 508-898-9220

320 Forbes Blvd
Mansfield, MA 02048
Tel: 508-822-9300

Client Information

Client: TRC

Address: 650 SUFFOLK ST
LOWELL MA

Phone: 978-970-6500

Email: DSULLIVAN@TRCSOLUTIONS.COM

Project Information

Project Name:

Project Location: NEW BEDFORD MA

Project #: 115058

Project Manager: DAVID SULLIVAN

ALPHA Quote #:

Turn-Around Time

☑ Standard 5-DAY ☐ RUSH (only confirmed if pre-approved!)

Date Due:

Report Information - Data Deliverables

☑ ADEx ☑ EMAIL

Billing Information

☐ Same as Client info PO #: C115058

Regulatory Requirements & Project Information Requirements

☑ Yes ☐ No MA MCP Analytical Methods ☐ Yes ☐ No CT RCP Analytical Methods
☐ Yes ☐ No Matrix Spike Required on this SDG? (Required for MCP Inorganics)
☐ Yes ☐ No GW1 Standards (Info Required for Metals & EPH with Targets)
☐ Yes ☐ No NPDES RGP
☐ Other State /Fed Program _____ Criteria _____

Additional Project Information:

ANALYSIS: VOC: ☑ 8260 ☐ 624 ☐ 524.2; SVOC: ☐ ABN ☐ PAH; METALS: ☐ MCP 13 ☐ MCP 14 ☐ RCP 15; METALS: ☐ RCRA5 ☐ RCRA8 ☐ PP13; EPH: ☐ Ranges & Targets ☐ Ranges Only; VPH: ☐ Ranges & Targets ☐ Ranges Only; ☑ PCB ☐ PEST; TPH: ☐ Quant Only ☐ Fingerprint

SAMPLE INFO: Filtration ☐ Field ☐ Lab to do; Preservation ☐ Lab to do

ALPHA Lab ID (Lab Use Only)	Sample ID	Collection Date	Collection Time	Sample Matrix	Sampler Initials	VOC	SVOC	METALS	METALS	EPH	VPH	PCB	TPH							Sample Comments	TOTAL # BOTTLES
19685-01	INFLUENT	8/14/15	10:00	I	JF	✓						✓									5
02	EFFLUENT	8/14/15	11:30	E	JF	✓						✓									5
Container Type						V						A									
Preservative						B						A									

Container Type
P= Plastic
A= Amber glass
V= Vial
G= Glass
B= Bacteria cup
C= Cube
O= Other
E= Encore
D= BOD Bottle

Preservative
A= None
B= HCl
C= HNO_3
D= H_2SO_4
E= NaOH
F= MeOH
G= $NaHSO_4$
H = $Na_2S_2O_3$
I= Ascorbic Acid
J = NH_4Cl
K= Zn Acetate
O= Other

Relinquished By:	Date/Time	Received By:	Date/Time
[signature]	8/14/15 15:35	[signature]	8/14/15 15:35
[signature]	8/14/15 19:10	[signature]	8/14/15 19:10
[signature]	8/14/15 19:56	[signature]	8/14/15 19:56

All samples submitted are subject to Alpha's Terms and Conditions. See reverse side.

FORM NO: 01-01 (rev. 12-Mar-2012)

7A
Volatile Organics CONTINUING CALIBRATION CHECK

Lab Name: Alpha Analytical Labs

SDG No.: L1519685

Instrument ID: Quimby.i Calibration Date: 21-AUG-2015 Time: 04:00

Lab File ID: 0821A02 Init. Calib. Date(s): 12-AUG-2 12-AUG-2

Sample No: 8260 CCAL Init. Calib. Times : 08:48 14:16

Compound	RRF	RRF	MIN RRF	%D	MAX %D	
dichlorodifluoromethane	.26664	.26991	.1	1	20	
chloromethane	100	115	.1	15	20	
vinyl chloride	.2736	.32108	.1	17	20	
bromomethane	100	106	.1	6	20	
chloroethane	.16631	.22782	.1	37	20	F
trichlorofluoromethane	.38613	.47564	.1	23	20	F
ethyl ether	.1539	.18746	.05	22	20	F
acrolein	.04126	.02288	.05	-45	20	F
freon-113	.25393	.29297	.1	15	20	
acetone	100	125	.1	25	20	F
1,1,-dichloroethene	.28271	.27886	.1	-1	20	
tert-butyl alcohol	.02106	.01607	.05	-24	20	F
iodomethane	.3068	.179	.05	-42	20	F
methyl acetate	.19619	.27669	.01	41	20	F
carbon disulfide	.74688	.64575	.1	-14	20	
methylene chloride	.30549	.33284	.1	9	20	
acrylonitrile	.12103	.14387	.05	19	20	
methyl tert butyl ether	.53371	.66645	.1	25	20	F
Halothane	.20478	.21615	.05	6	20	
trans-1,2-dichloroethene	.29229	.30929	.1	6	20	
Diisopropyl Ether	1.3678	1.7369	.05	27	20	F
1,1-dichloroethane	.59535	.71687	.2	20	20	F
vinyl acetate	.55277	.44695	.05	-19	20	
Ethyl-Tert-Butyl-Ether	.88501	.96001	.05	8	20	
2-butanone	.1454	.16128	.1	11	20	
2,2-dichloropropane	.24308	.20292	.05	-17	20	
ethyl acetate	.26453	.2855	.05	8	20	
cis-1,2-dichloroethene	.32882	.33781	.1	3	20	
chloroform	.5073	.58841	.2	16	20	
bromochloromethane	.13903	.14164	.05	2	20	
tetrahydrofuran	.09327	.10696	.05	15	20	
1,1,1-trichloroethane	.36302	.40057	.1	10	20	
cyclohexane	.69471	.87923	.01	27	30	
1,1-dichloropropene	.41596	.48303	.05	16	20	
carbontetrachloride	100	114	.1	14	20	
Tertiary-Amyl Methyl Ether	.67114	.66201	.05	-1	20	
1,2-dichloroethane	.42686	.49841	.1	17	20	
benzene	1.2557	1.3811	.5	10	20	

FORM VII MCP-8260-10

7A
CONTINUING CALIBRATION CHECK

Lab Name: Alpha Analytical Labs

SDG No.: L1519685

Instrument ID: Quimby.i Calibration Date: 21-AUG-2015 Time: 04:00

Lab File ID: 0821A02 Init. Calib. Date(s): 12-AUG-2 12-AUG-2

Sample No: 8260 CCAL Init. Calib. Times : 08:48 14:16

Compound	RRF	RRF	MIN RRF	%D	MAX %D	
trichloroethene	.31416	.34257	.2	9	20	
methyl cyclohexane	.56555	.69443	.01	23	30	
1,2-dichloropropane	.37387	.40816	.1	9	20	
bromodichloromethane	.34461	.38231	.2	11	20	
1,4-dioxane	.00248	.00267	.05	7	20	F
dibromomethane	.161	.16966	.05	5	20	
2-chloroethylvinyl ether	.10506	.11437	.05	9	20	
4-methyl-2-pentanone	.11501	.11932	.1	4	20	
cis-1,3-dichloropropene	.3783	.39627	.2	5	20	
toluene	1.0340	1.1018	.4	7	20	
ethyl-methacrylate	.45029	.38917	.01	-14	20	
trans-1,3-dichloropropene	.37543	.35741	.1	-5	20	
1,1,2-trichloroethane	.25765	.26973	.1	5	20	
2-hexanone	.26992	.30969	.1	15	20	
1,3-dichloropropane	.53447	.59024	.05	10	20	
tetrachloroethene	.4007	.40406	.2	1	20	
chlorodibromomethane	.28443	.25418	.1	-11	20	
1,2-dibromoethane	.27561	.27849	.1	1	20	
chlorobenzene	1.1475	1.2170	.5	6	20	
1,1,1,2-tetrachloroethane	.33588	.29239	.05	-13	20	
ethyl benzene	1.9916	2.2650	.1	14	20	
p/m xylene	.79595	.87561	.1	10	20	
o xylene	.76731	.88027	.3	15	20	
styrene	1.2625	1.4435	.31	14	20	
isopropylbenzene	2.0766	2.2831	.1	10	20	
bromoform	.2726	.20832	.1	-24	20	F
1,4-dichlorobutane	1.3182	1.5472	.01	17	20	
1,1,2,2,-tetrachloroethane	.68506	.70258	.3	3	20	
1,2,3-trichloropropane	.53519	.57429	.05	7	20	
trans-1,4-dichloro-2-butene	.19952	.22701	.05	14	20	
n-propylbenzene	4.3824	5.0136	.05	14	20	
bromobenzene	.85131	.86086	.05	1	20	
4-ethyltoluene	1.8544	1.8977	.05	2	20	
1,3,5-trimethybenzene	3.2427	3.5403	.05	9	20	
2-chlorotoluene	2.9718	3.3241	.05	12	20	
4-chorotoluene	2.7785	3.1063	.05	12	20	
tert-butylbenzene	2.8293	2.9687	.05	5	20	
1,2,4-trimethylbenzene	3.2525	3.3569	.05	3	20	

FORM VII MCP-8260-10

7A
CONTINUING CALIBRATION CHECK

Lab Name: Alpha Analytical Labs

SDG No.: L1519685

Instrument ID: Quimby.i Calibration Date: 21-AUG-2015 Time: 04:00

Lab File ID: 0821A02 Init. Calib. Date(s): 12-AUG-2 12-AUG-2

Sample No: 8260 CCAL Init. Calib. Times : 08:48 14:16

Compound	RRF	RRF	MIN RRF	%D	MAX %D	
sec-butylbenzene	4.2003	4.4783	.05	7	20	
p-isopropyltoluene	3.6124	3.6839	.05	2	20	
1,3-dichlorobenzene	1.7803	1.7902	.6	1	20	
1,4-dichlorobenzene	1.7733	1.7974	.5	1	20	
n-butylbenzene	3.7760	3.8910	.05	3	20	
p-diethylbenzene	.98943	.98269	.05	-1	20	
1,2-dichlorobenzene	1.6451	1.6952	.4	3	20	
1,2,4,5-tetramethylbenezene	1.4202	1.3656	.05	-4	20	
1,2-dibromo-3-chloropropane	.10842	.08652	.05	-20	20	F
1,3,5-trichlorobenzene	1.2123	1.1502	.01	-5	30	
1,2,4-trichlorobenzene	.93682	.83353	.2	-11	20	
hexachlorobutadiene	.45366	.42419	.05	-6	20	
naphthalene	1.8217	1.5458	.05	-15	20	
1,2,3-trichlorobenzene	.82219	.74093	.05	-10	20	
dibromofluoromethane	.21209	.22419	.05	6	20	
1,2-dichloroethane-d4	.27955	.31029	.05	11	20	
toluene-d8	1.2220	1.2427	.05	2	20	
4-bromofluorobenzene	.92929	.96321	.05	4	20	

FORM VII MCP-8260-10

ANALYTICAL REPORT

Lab Number:	L1522562
Client:	TRC Environmental Consultants Wannalancit Mills 650 Suffolk Street Lowell, MA 01854
ATTN:	David Sullivan
Phone:	(978) 656-3565
Project Name:	NBHS IRA O&M
Project Number:	115058
Report Date:	09/21/15

The original project report/data package is held by Alpha Analytical. This report/data package is paginated and should be reproduced only in its entirety. Alpha Analytical holds no responsibility for results and/or data that are not consistent with the original.

Certifications & Approvals: MA (M-MA086), NY (11148), CT (PH-0574), NH (2003), NJ NELAP (MA935), RI (LAO00065), ME (MA00086), PA (68-03671), VA (460195), MD (348), IL (200077), NC (666), TX (T104704476), DOD (L2217), USDA (Permit #P-330-11-00240).

Eight Walkup Drive, Westborough, MA 01581-1019
508-898-9220 (Fax) 508-898-9193 800-624-9220 - www.alphalab.com

Project Name: NBHS IRA O&M
Project Number: 115058

Lab Number: L1522562
Report Date: 09/21/15

Alpha Sample ID	Client ID	Matrix	Sample Location	Collection Date/Time	Receive Date
L1522562-01	INFLUENT	WATER	NEW BEDFORD, MA	09/14/15 10:30	09/14/15
L1522562-02	EFFLUENT	WATER	NEW BEDFORD, MA	09/14/15 11:00	09/14/15

Project Name: NBHS IRA O&M **Lab Number:** L1522562

Project Number: 115058 **Report Date:** 09/21/15

MADEP MCP Response Action Analytical Report Certification

This form provides certifications for all samples performed by MCP methods. Please refer to the Sample Results and Container Information sections of this report for specification of MCP methods used for each analysis. The following questions pertain only to MCP Analytical Methods.

An affirmative response to questions A through F is required for "Presumptive Certainty" status		
A	Were all samples received in a condition consistent with those described on the Chain-of-Custody, properly preserved (including temperature) in the field or laboratory, and prepared/analyzed within method holding times?	YES
B	Were the analytical method(s) and all associated QC requirements specified in the selected CAM protocol(s) followed?	YES
C	Were all required corrective actions and analytical response actions specified in the selected CAM protocol(s) implemented for all identified performance standard non-conformances?	YES
D	Does the laboratory report comply with all the reporting requirements specified in CAM VII A, "Quality Assurance and Quality Control Guidelines for the Acquisition and Reporting of Analytical Data?"	YES
E a.	VPH, EPH, and APH Methods only: Was each method conducted without significant modification(s)? (Refer to the individual method(s) for a list of significant modifications).	N/A
E b.	APH and TO-15 Methods only: Was the complete analyte list reported for each method?	N/A
F	Were all applicable CAM protocol QC and performance standard non-conformances identified and evaluated in a laboratory narrative (including all "No" responses to Questions A through E)?	YES

A response to questions G, H and I is required for "Presumptive Certainty" status		
G	Were the reporting limits at or below all CAM reporting limits specified in the selected CAM protocol(s)?	NO
H	Were all QC performance standards specified in the CAM protocol(s) achieved?	NO
I	Were results reported for the complete analyte list specified in the selected CAM protocol(s)?	YES

For any questions answered "No", please refer to the case narrative section on the following page(s).

Please note that sample matrix information is located in the Sample Results section of this report.

Project Name: NBHS IRA O&M
Project Number: 115058

Lab Number: L1522562
Report Date: 09/21/15

Case Narrative

The samples were received in accordance with the Chain of Custody and no significant deviations were encountered during the preparation or analysis unless otherwise noted. Sample Receipt, Container Information, and the Chain of Custody are located at the back of the report.

Results contained within this report relate only to the samples submitted under this Alpha Lab Number and meet all of the requirements of NELAC, for all NELAC accredited parameters. The data presented in this report is organized by parameter (i.e. VOC, SVOC, etc.). Sample specific Quality Control data (i.e. Surrogate Spike Recovery) is reported at the end of the target analyte list for each individual sample, followed by the Laboratory Batch Quality Control at the end of each parameter. Tentatively Identified Compounds (TICs), if requested, are reported for compounds identified to be present and are not part of the method/program Target Compound List, even if only a subset of the TCL are being reported. If a sample was re-analyzed or re-extracted due to a required quality control corrective action and if both sets of data are reported, the Laboratory ID of the re-analysis or re-extraction is designated with an "R" or "RE", respectively. When multiple Batch Quality Control elements are reported (e.g. more than one LCS), the associated samples for each element are noted in the grey shaded header line of each data table. Any Laboratory Batch, Sample Specific % recovery or RPD value that is outside the listed Acceptance Criteria is bolded in the report. All specific QC information is also incorporated in the Data Usability format of our Data Merger tool where it can be reviewed along with any associated usability implications. Soil/sediments, solids and tissues are reported on a dry weight basis unless otherwise noted. Definitions of all data qualifiers and acronyms used in this report are provided in the Glossary located at the back of the report.

In reference to questions H (CAM) or 4 (RCP) when "NO" is checked, the performance criteria for CAM and RCP methods allow for some quality control failures to occur and still be within method compliance. In these instances the specific failure is not narrated but noted in the associated QC table. The information is also incorporated in the Data Usability format of our Data Merger tool where it can be reviewed along with any associated usability implications.

Please see the associated ADEx data file for a comparison of laboratory reporting limits that were achieved with the regulatory Numerical Standards requested on the Chain of Custody.

HOLD POLICY
For samples submitted on hold, Alpha's policy is to hold samples (with the exception of Air canisters) free of charge for 21 calendar days from the date the project is completed. After 21 calendar days, we will dispose of all samples submitted including those put on hold unless you have contacted your Client Service Representative and made arrangements for Alpha to continue to hold the samples. Air canisters will be disposed after 3 business days from the date the project is completed.

Please contact Client Services at 800-624-9220 with any questions.

Project Name: NBHS IRA O&M **Lab Number:** L1522562
Project Number: 115058 **Report Date:** 09/21/15

Case Narrative (continued)

MCP Related Narratives

Volatile Organics

Effluent (L1522562-02) results are greater than Influent (L1522562-01) results. The sample containers were verified as being labeled correctly by the laboratory, and the reported results were confirmed by the screen analysis results.

In reference to question H:

The WG823240-1/-2 LCS/LCSD recoveries, associated with L1522562-01 and -02, are outside the acceptance criteria for individual target compounds, but within the overall method allowances. The results of the associated samples are reported; however, all results are considered to have a potentially low bias for bromomethane (56%/66%) and acetone (68%/66%), and a potentially high bias for 2,2-dichloropropane (150%/155%). In addition, the LCS/LCSD RPD is above the acceptance criteria for 1,4-dioxane (43%).

The initial calibration, associated with L1522562-01 and -02, did not meet the method required minimum response factor on the lowest calibration standard for 4-methyl-2-pentanone (0.06505) and 1,4-dioxane (0.00247), as well as the average response factor for 2-butanone, 4-methyl-2-pentanone, and 1,4-dioxane.

The continuing calibration standard, associated with L1522562-01 and -02, is outside the acceptance criteria for several compounds; however, it is within overall method allowances. A copy of the continuing calibration standard is included as an addendum to this report.

PCBs

L1522562-01: The sample has elevated detection limits due to the dilution required by the elevated concentrations of target compounds in the sample.

In reference to question G:

L1522562-01: The following target analytes did not achieve the requested CAM reporting limits: Aroclor 1016, Aroclor 1221, Aroclor 1232, Aroclor 1242, Aroclor 1248, Aroclor 1260, Aroclor 1262, and Aroclor 1268.

I, the undersigned, attest under the pains and penalties of perjury that, to the best of my knowledge and belief and based upon my personal inquiry of those responsible for providing the information contained in this analytical report, such information is accurate and complete. This certificate of analysis is not complete unless this page accompanies any and all pages of this report.

Authorized Signature: Kelly Stenstrom

Title: Technical Director/Representative Date: 09/21/15

ORGANICS

VOLATILES

Project Name: NBHS IRA O&M
Project Number: 115058
Lab Number: L1522562
Report Date: 09/21/15

SAMPLE RESULTS

Lab ID: L1522562-01
Client ID: INFLUENT
Sample Location: NEW BEDFORD, MA
Matrix: Water
Analytical Method: 97,8260C
Analytical Date: 09/21/15 09:26
Analyst: MM

Date Collected: 09/14/15 10:30
Date Received: 09/14/15
Field Prep: Not Specified

Parameter	Result	Qualifier	Units	RL	MDL	Dilution Factor
MCP Volatile Organics - Westborough Lab						
Methylene chloride	ND		ug/l	2.0	--	1
1,1-Dichloroethane	ND		ug/l	1.0	--	1
Chloroform	ND		ug/l	1.0	--	1
Carbon tetrachloride	ND		ug/l	1.0	--	1
1,2-Dichloropropane	ND		ug/l	1.0	--	1
Dibromochloromethane	ND		ug/l	1.0	--	1
1,1,2-Trichloroethane	ND		ug/l	1.0	--	1
Tetrachloroethene	ND		ug/l	1.0	--	1
Chlorobenzene	ND		ug/l	1.0	--	1
Trichlorofluoromethane	ND		ug/l	2.0	--	1
1,2-Dichloroethane	ND		ug/l	1.0	--	1
1,1,1-Trichloroethane	ND		ug/l	1.0	--	1
Bromodichloromethane	ND		ug/l	1.0	--	1
trans-1,3-Dichloropropene	ND		ug/l	0.50	--	1
cis-1,3-Dichloropropene	ND		ug/l	0.50	--	1
1,3-Dichloropropene, Total	ND		ug/l	0.50	--	1
1,1-Dichloropropene	ND		ug/l	2.0	--	1
Bromoform	ND		ug/l	2.0	--	1
1,1,2,2-Tetrachloroethane	ND		ug/l	1.0	--	1
Benzene	ND		ug/l	0.50	--	1
Toluene	ND		ug/l	1.0	--	1
Ethylbenzene	ND		ug/l	1.0	--	1
Chloromethane	ND		ug/l	2.0	--	1
Bromomethane	ND		ug/l	2.0	--	1
Vinyl chloride	9.2		ug/l	1.0	--	1
Chloroethane	ND		ug/l	2.0	--	1
1,1-Dichloroethene	ND		ug/l	1.0	--	1
trans-1,2-Dichloroethene	4.7		ug/l	1.0	--	1
Trichloroethene	2.4		ug/l	1.0	--	1
1,2-Dichlorobenzene	ND		ug/l	1.0	--	1

Project Name: NBHS IRA O&M **Lab Number:** L1522562

Project Number: 115058 **Report Date:** 09/21/15

SAMPLE RESULTS

Lab ID: L1522562-01 Date Collected: 09/14/15 10:30

Client ID: INFLUENT Date Received: 09/14/15

Sample Location: NEW BEDFORD, MA Field Prep: Not Specified

Parameter	Result	Qualifier	Units	RL	MDL	Dilution Factor
MCP Volatile Organics - Westborough Lab						
1,3-Dichlorobenzene	ND		ug/l	1.0	--	1
1,4-Dichlorobenzene	2.6		ug/l	1.0	--	1
Methyl tert butyl ether	ND		ug/l	2.0	--	1
p/m-Xylene	ND		ug/l	2.0	--	1
o-Xylene	ND		ug/l	1.0	--	1
Xylene (Total)	ND		ug/l	1.0	--	1
cis-1,2-Dichloroethene	9.8		ug/l	1.0	--	1
1,2-Dichloroethene (total)	15		ug/l	1.0	--	1
Dibromomethane	ND		ug/l	2.0	--	1
1,2,3-Trichloropropane	ND		ug/l	2.0	--	1
Styrene	ND		ug/l	1.0	--	1
Dichlorodifluoromethane	ND		ug/l	2.0	--	1
Acetone	ND		ug/l	5.0	--	1
Carbon disulfide	ND		ug/l	2.0	--	1
2-Butanone	ND		ug/l	5.0	--	1
4-Methyl-2-pentanone	ND		ug/l	5.0	--	1
2-Hexanone	ND		ug/l	5.0	--	1
Bromochloromethane	ND		ug/l	2.0	--	1
Tetrahydrofuran	ND		ug/l	2.0	--	1
2,2-Dichloropropane	ND		ug/l	2.0	--	1
1,2-Dibromoethane	ND		ug/l	2.0	--	1
1,3-Dichloropropane	ND		ug/l	2.0	--	1
1,1,1,2-Tetrachloroethane	ND		ug/l	1.0	--	1
Bromobenzene	ND		ug/l	2.0	--	1
n-Butylbenzene	ND		ug/l	2.0	--	1
sec-Butylbenzene	ND		ug/l	2.0	--	1
tert-Butylbenzene	ND		ug/l	2.0	--	1
o-Chlorotoluene	ND		ug/l	2.0	--	1
p-Chlorotoluene	ND		ug/l	2.0	--	1
1,2-Dibromo-3-chloropropane	ND		ug/l	2.0	--	1
Hexachlorobutadiene	ND		ug/l	0.60	--	1
Isopropylbenzene	ND		ug/l	2.0	--	1
p-Isopropyltoluene	ND		ug/l	2.0	--	1
Naphthalene	ND		ug/l	2.0	--	1
n-Propylbenzene	ND		ug/l	2.0	--	1
1,2,3-Trichlorobenzene	ND		ug/l	2.0	--	1
1,2,4-Trichlorobenzene	ND		ug/l	2.0	--	1
1,3,5-Trimethylbenzene	ND		ug/l	2.0	--	1
1,2,4-Trimethylbenzene	ND		ug/l	2.0	--	1

Project Name: NBHS IRA O&M **Lab Number:** L1522562

Project Number: 115058 **Report Date:** 09/21/15

SAMPLE RESULTS

Lab ID: L1522562-01 Date Collected: 09/14/15 10:30

Client ID: INFLUENT Date Received: 09/14/15

Sample Location: NEW BEDFORD, MA Field Prep: Not Specified

Parameter	Result	Qualifier	Units	RL	MDL	Dilution Factor
MCP Volatile Organics - Westborough Lab						
Ethyl ether	ND		ug/l	2.0	--	1
Isopropyl Ether	ND		ug/l	2.0	--	1
Ethyl-Tert-Butyl-Ether	ND		ug/l	2.0	--	1
Tertiary-Amyl Methyl Ether	ND		ug/l	2.0	--	1
1,4-Dioxane	ND		ug/l	250	--	1

Surrogate	% Recovery	Qualifier	Acceptance Criteria
1,2-Dichloroethane-d4	120		70-130
Toluene-d8	101		70-130
4-Bromofluorobenzene	112		70-130
Dibromofluoromethane	113		70-130

Project Name: NBHS IRA O&M
Project Number: 115058
Lab Number: L1522562
Report Date: 09/21/15

SAMPLE RESULTS

Lab ID: L1522562-02
Client ID: EFFLUENT
Sample Location: NEW BEDFORD, MA
Matrix: Water
Analytical Method: 97,8260C
Analytical Date: 09/21/15 08:55
Analyst: MM

Date Collected: 09/14/15 11:00
Date Received: 09/14/15
Field Prep: Not Specified

Parameter	Result	Qualifier	Units	RL	MDL	Dilution Factor
MCP Volatile Organics - Westborough Lab						
Methylene chloride	ND		ug/l	2.0	--	1
1,1-Dichloroethane	ND		ug/l	1.0	--	1
Chloroform	ND		ug/l	1.0	--	1
Carbon tetrachloride	ND		ug/l	1.0	--	1
1,2-Dichloropropane	ND		ug/l	1.0	--	1
Dibromochloromethane	ND		ug/l	1.0	--	1
1,1,2-Trichloroethane	ND		ug/l	1.0	--	1
Tetrachloroethene	ND		ug/l	1.0	--	1
Chlorobenzene	ND		ug/l	1.0	--	1
Trichlorofluoromethane	ND		ug/l	2.0	--	1
1,2-Dichloroethane	ND		ug/l	1.0	--	1
1,1,1-Trichloroethane	ND		ug/l	1.0	--	1
Bromodichloromethane	ND		ug/l	1.0	--	1
trans-1,3-Dichloropropene	ND		ug/l	0.50	--	1
cis-1,3-Dichloropropene	ND		ug/l	0.50	--	1
1,3-Dichloropropene, Total	ND		ug/l	0.50	--	1
1,1-Dichloropropene	ND		ug/l	2.0	--	1
Bromoform	ND		ug/l	2.0	--	1
1,1,2,2-Tetrachloroethane	ND		ug/l	1.0	--	1
Benzene	ND		ug/l	0.50	--	1
Toluene	ND		ug/l	1.0	--	1
Ethylbenzene	ND		ug/l	1.0	--	1
Chloromethane	ND		ug/l	2.0	--	1
Bromomethane	ND		ug/l	2.0	--	1
Vinyl chloride	ND		ug/l	1.0	--	1
Chloroethane	ND		ug/l	2.0	--	1
1,1-Dichloroethene	ND		ug/l	1.0	--	1
trans-1,2-Dichloroethene	28		ug/l	1.0	--	1
Trichloroethene	ND		ug/l	1.0	--	1
1,2-Dichlorobenzene	ND		ug/l	1.0	--	1

Project Name: NBHS IRA O&M **Lab Number:** L1522562

Project Number: 115058 **Report Date:** 09/21/15

SAMPLE RESULTS

Lab ID: L1522562-02 Date Collected: 09/14/15 11:00

Client ID: EFFLUENT Date Received: 09/14/15

Sample Location: NEW BEDFORD, MA Field Prep: Not Specified

Parameter	Result	Qualifier	Units	RL	MDL	Dilution Factor
MCP Volatile Organics - Westborough Lab						
1,3-Dichlorobenzene	ND		ug/l	1.0	--	1
1,4-Dichlorobenzene	ND		ug/l	1.0	--	1
Methyl tert butyl ether	ND		ug/l	2.0	--	1
p/m-Xylene	ND		ug/l	2.0	--	1
o-Xylene	ND		ug/l	1.0	--	1
Xylene (Total)	ND		ug/l	1.0	--	1
cis-1,2-Dichloroethene	30		ug/l	1.0	--	1
1,2-Dichloroethene (total)	58		ug/l	1.0	--	1
Dibromomethane	ND		ug/l	2.0	--	1
1,2,3-Trichloropropane	ND		ug/l	2.0	--	1
Styrene	ND		ug/l	1.0	--	1
Dichlorodifluoromethane	ND		ug/l	2.0	--	1
Acetone	ND		ug/l	5.0	--	1
Carbon disulfide	ND		ug/l	2.0	--	1
2-Butanone	ND		ug/l	5.0	--	1
4-Methyl-2-pentanone	ND		ug/l	5.0	--	1
2-Hexanone	ND		ug/l	5.0	--	1
Bromochloromethane	ND		ug/l	2.0	--	1
Tetrahydrofuran	ND		ug/l	2.0	--	1
2,2-Dichloropropane	ND		ug/l	2.0	--	1
1,2-Dibromoethane	ND		ug/l	2.0	--	1
1,3-Dichloropropane	ND		ug/l	2.0	--	1
1,1,1,2-Tetrachloroethane	ND		ug/l	1.0	--	1
Bromobenzene	ND		ug/l	2.0	--	1
n-Butylbenzene	ND		ug/l	2.0	--	1
sec-Butylbenzene	ND		ug/l	2.0	--	1
tert-Butylbenzene	ND		ug/l	2.0	--	1
o-Chlorotoluene	ND		ug/l	2.0	--	1
p-Chlorotoluene	ND		ug/l	2.0	--	1
1,2-Dibromo-3-chloropropane	ND		ug/l	2.0	--	1
Hexachlorobutadiene	ND		ug/l	0.60	--	1
Isopropylbenzene	ND		ug/l	2.0	--	1
p-Isopropyltoluene	ND		ug/l	2.0	--	1
Naphthalene	ND		ug/l	2.0	--	1
n-Propylbenzene	ND		ug/l	2.0	--	1
1,2,3-Trichlorobenzene	ND		ug/l	2.0	--	1
1,2,4-Trichlorobenzene	ND		ug/l	2.0	--	1
1,3,5-Trimethylbenzene	ND		ug/l	2.0	--	1
1,2,4-Trimethylbenzene	ND		ug/l	2.0	--	1

Project Name: NBHS IRA O&M **Lab Number:** L1522562

Project Number: 115058 **Report Date:** 09/21/15

SAMPLE RESULTS

Lab ID: L1522562-02 Date Collected: 09/14/15 11:00

Client ID: EFFLUENT Date Received: 09/14/15

Sample Location: NEW BEDFORD, MA Field Prep: Not Specified

Parameter	Result	Qualifier	Units	RL	MDL	Dilution Factor
MCP Volatile Organics - Westborough Lab						
Ethyl ether	ND		ug/l	2.0	--	1
Isopropyl Ether	ND		ug/l	2.0	--	1
Ethyl-Tert-Butyl-Ether	ND		ug/l	2.0	--	1
Tertiary-Amyl Methyl Ether	ND		ug/l	2.0	--	1
1,4-Dioxane	ND		ug/l	250	--	1

Surrogate	% Recovery	Qualifier	Acceptance Criteria
1,2-Dichloroethane-d4	121		70-130
Toluene-d8	101		70-130
4-Bromofluorobenzene	117		70-130
Dibromofluoromethane	113		70-130

Project Name: NBHS IRA O&M **Lab Number:** L1522562

Project Number: 115058 **Report Date:** 09/21/15

Method Blank Analysis
Batch Quality Control

Analytical Method: 97,8260C
Analytical Date: 09/21/15 07:20
Analyst: MM

Parameter	Result	Qualifier	Units	RL	MDL
MCP Volatile Organics - Westborough Lab for sample(s): 01-02 Batch: WG823240-3					
Methylene chloride	ND		ug/l	2.0	--
1,1-Dichloroethane	ND		ug/l	1.0	--
Chloroform	ND		ug/l	1.0	--
Carbon tetrachloride	ND		ug/l	1.0	--
1,2-Dichloropropane	ND		ug/l	1.0	--
Dibromochloromethane	ND		ug/l	1.0	--
1,1,2-Trichloroethane	ND		ug/l	1.0	--
Tetrachloroethene	ND		ug/l	1.0	--
Chlorobenzene	ND		ug/l	1.0	--
Trichlorofluoromethane	ND		ug/l	2.0	--
1,2-Dichloroethane	ND		ug/l	1.0	--
1,1,1-Trichloroethane	ND		ug/l	1.0	--
Bromodichloromethane	ND		ug/l	1.0	--
trans-1,3-Dichloropropene	ND		ug/l	0.50	--
cis-1,3-Dichloropropene	ND		ug/l	0.50	--
1,3-Dichloropropene, Total	ND		ug/l	0.50	--
1,1-Dichloropropene	ND		ug/l	2.0	--
Bromoform	ND		ug/l	2.0	--
1,1,2,2-Tetrachloroethane	ND		ug/l	1.0	--
Benzene	ND		ug/l	0.50	--
Toluene	ND		ug/l	1.0	--
Ethylbenzene	ND		ug/l	1.0	--
Chloromethane	ND		ug/l	2.0	--
Bromomethane	ND		ug/l	2.0	--
Vinyl chloride	ND		ug/l	1.0	--
Chloroethane	ND		ug/l	2.0	--
1,1-Dichloroethene	ND		ug/l	1.0	--
trans-1,2-Dichloroethene	ND		ug/l	1.0	--
Trichloroethene	ND		ug/l	1.0	--

Project Name: NBHS IRA O&M **Lab Number:** L1522562

Project Number: 115058 **Report Date:** 09/21/15

Method Blank Analysis
Batch Quality Control

Analytical Method: 97,8260C
Analytical Date: 09/21/15 07:20
Analyst: MM

Parameter	Result	Qualifier	Units	RL	MDL
MCP Volatile Organics - Westborough Lab for sample(s): 01-02 Batch: WG823240-3					
1,2-Dichlorobenzene	ND		ug/l	1.0	--
1,3-Dichlorobenzene	ND		ug/l	1.0	--
1,4-Dichlorobenzene	ND		ug/l	1.0	--
Methyl tert butyl ether	ND		ug/l	2.0	--
p/m-Xylene	ND		ug/l	2.0	--
o-Xylene	ND		ug/l	1.0	--
Xylene (Total)	ND		ug/l	1.0	--
cis-1,2-Dichloroethene	ND		ug/l	1.0	--
1,2-Dichloroethene (total)	ND		ug/l	1.0	--
Dibromomethane	ND		ug/l	2.0	--
1,2,3-Trichloropropane	ND		ug/l	2.0	--
Styrene	ND		ug/l	1.0	--
Dichlorodifluoromethane	ND		ug/l	2.0	--
Acetone	ND		ug/l	5.0	--
Carbon disulfide	ND		ug/l	2.0	--
2-Butanone	ND		ug/l	5.0	--
4-Methyl-2-pentanone	ND		ug/l	5.0	--
2-Hexanone	ND		ug/l	5.0	--
Bromochloromethane	ND		ug/l	2.0	--
Tetrahydrofuran	ND		ug/l	2.0	--
2,2-Dichloropropane	ND		ug/l	2.0	--
1,2-Dibromoethane	ND		ug/l	2.0	--
1,3-Dichloropropane	ND		ug/l	2.0	--
1,1,1,2-Tetrachloroethane	ND		ug/l	1.0	--
Bromobenzene	ND		ug/l	2.0	--
n-Butylbenzene	ND		ug/l	2.0	--
sec-Butylbenzene	ND		ug/l	2.0	--
tert-Butylbenzene	ND		ug/l	2.0	--
o-Chlorotoluene	ND		ug/l	2.0	--

Project Name: NBHS IRA O&M
Project Number: 115058
Lab Number: L1522562
Report Date: 09/21/15

Method Blank Analysis
Batch Quality Control

Analytical Method: 97,8260C
Analytical Date: 09/21/15 07:20
Analyst: MM

Parameter	Result	Qualifier	Units	RL	MDL
MCP Volatile Organics - Westborough Lab for sample(s): 01-02 Batch: WG823240-3					
p-Chlorotoluene	ND		ug/l	2.0	--
1,2-Dibromo-3-chloropropane	ND		ug/l	2.0	--
Hexachlorobutadiene	ND		ug/l	0.60	--
Isopropylbenzene	ND		ug/l	2.0	--
p-Isopropyltoluene	ND		ug/l	2.0	--
Naphthalene	ND		ug/l	2.0	--
n-Propylbenzene	ND		ug/l	2.0	--
1,2,3-Trichlorobenzene	ND		ug/l	2.0	--
1,2,4-Trichlorobenzene	ND		ug/l	2.0	--
1,3,5-Trimethylbenzene	ND		ug/l	2.0	--
1,2,4-Trimethylbenzene	ND		ug/l	2.0	--
Ethyl ether	ND		ug/l	2.0	--
Isopropyl Ether	ND		ug/l	2.0	--
Ethyl-Tert-Butyl-Ether	ND		ug/l	2.0	--
Tertiary-Amyl Methyl Ether	ND		ug/l	2.0	--
1,4-Dioxane	ND		ug/l	250	--

Surrogate	%Recovery	Qualifier	Acceptance Criteria
1,2-Dichloroethane-d4	116		70-130
Toluene-d8	101		70-130
4-Bromofluorobenzene	113		70-130
Dibromofluoromethane	109		70-130

Lab Control Sample Analysis
Batch Quality Control

Project Name: NBHS IRA O&M
Project Number: 115058

Lab Number: L1522562
Report Date: 09/21/15

Parameter	LCS %Recovery	Qual	LCSD %Recovery	Qual	%Recovery Limits	RPD	Qual	RPD Limits
MCP Volatile Organics - Westborough Lab Associated sample(s): 01-02 Batch: WG823240-1 WG823240-2								
Methylene chloride	106		102		70-130	4		20
1,1-Dichloroethane	116		112		70-130	4		20
Chloroform	116		113		70-130	3		20
Carbon tetrachloride	90		97		70-130	7		20
1,2-Dichloropropane	105		103		70-130	2		20
Dibromochloromethane	92		100		70-130	8		20
1,1,2-Trichloroethane	105		103		70-130	2		20
Tetrachloroethene	109		104		70-130	5		20
Chlorobenzene	110		106		70-130	4		20
Trichlorofluoromethane	121		117		70-130	3		20
1,2-Dichloroethane	119		116		70-130	3		20
1,1,1-Trichloroethane	116		118		70-130	2		20
Bromodichloromethane	105		108		70-130	3		20
trans-1,3-Dichloropropene	91		93		70-130	2		20
cis-1,3-Dichloropropene	93		97		70-130	4		20
1,1-Dichloropropene	108		106		70-130	2		20
Bromoform	77		87		70-130	12		20
1,1,2,2-Tetrachloroethane	96		96		70-130	0		20
Benzene	108		105		70-130	3		20
Toluene	108		104		70-130	4		20
Ethylbenzene	114		109		70-130	4		20

Lab Control Sample Analysis
Batch Quality Control

Project Name: NBHS IRA O&M
Project Number: 115058

Lab Number: L1522562
Report Date: 09/21/15

Parameter	LCS %Recovery	Qual	LCSD %Recovery	Qual	%Recovery Limits	RPD	Qual	RPD Limits
MCP Volatile Organics - Westborough Lab Associated sample(s): 01-02 Batch: WG823240-1 WG823240-2								
Chloromethane	99		93		70-130	6		20
Bromomethane	**56**	Q	**66**	Q	70-130	16		20
Vinyl chloride	120		114		70-130	5		20
Chloroethane	125		121		70-130	3		20
1,1-Dichloroethene	103		100		70-130	3		20
trans-1,2-Dichloroethene	106		103		70-130	3		20
Trichloroethene	109		105		70-130	4		20
1,2-Dichlorobenzene	107		104		70-130	3		20
1,3-Dichlorobenzene	110		106		70-130	4		20
1,4-Dichlorobenzene	107		104		70-130	3		20
Methyl tert butyl ether	103		103		70-130	0		20
p/m-Xylene	115		110		70-130	4		20
o-Xylene	114		110		70-130	4		20
cis-1,2-Dichloroethene	108		103		70-130	5		20
Dibromomethane	113		110		70-130	3		20
1,2,3-Trichloropropane	102		103		70-130	1		20
Styrene	116		112		70-130	4		20
Dichlorodifluoromethane	108		103		70-130	5		20
Acetone	**68**	Q	**66**	Q	70-130	3		20
Carbon disulfide	106		106		70-130	0		20
2-Butanone	79		80		70-130	1		20

Lab Control Sample Analysis
Batch Quality Control

Project Name: NBHS IRA O&M
Project Number: 115058

Lab Number: L1522562
Report Date: 09/21/15

Parameter	LCS %Recovery	Qual	LCSD %Recovery	Qual	%Recovery Limits	RPD	Qual	RPD Limits
MCP Volatile Organics - Westborough Lab Associated sample(s): 01-02 Batch: WG823240-1 WG823240-2								
4-Methyl-2-pentanone	87		91		70-130	4		20
2-Hexanone	84		83		70-130	1		20
Bromochloromethane	106		105		70-130	1		20
Tetrahydrofuran	85		85		70-130	0		20
2,2-Dichloropropane	**150**	Q	**155**	Q	70-130	3		20
1,2-Dibromoethane	110		110		70-130	0		20
1,3-Dichloropropane	108		107		70-130	1		20
1,1,1,2-Tetrachloroethane	102		106		70-130	4		20
Bromobenzene	107		104		70-130	3		20
n-Butylbenzene	112		109		70-130	3		20
sec-Butylbenzene	106		104		70-130	2		20
tert-Butylbenzene	105		104		70-130	1		20
o-Chlorotoluene	117		113		70-130	3		20
p-Chlorotoluene	113		110		70-130	3		20
1,2-Dibromo-3-chloropropane	83		85		70-130	2		20
Hexachlorobutadiene	96		94		70-130	2		20
Isopropylbenzene	114		109		70-130	4		20
p-Isopropyltoluene	106		104		70-130	2		20
Naphthalene	86		84		70-130	2		20
n-Propylbenzene	110		108		70-130	2		20
1,2,3-Trichlorobenzene	88		85		70-130	3		20

Lab Control Sample Analysis
Batch Quality Control

Project Name: NBHS IRA O&M
Project Number: 115058
Lab Number: L1522562
Report Date: 09/21/15

Parameter	LCS %Recovery	Qual	LCSD %Recovery	Qual	%Recovery Limits	RPD	Qual	RPD Limits
MCP Volatile Organics - Westborough Lab Associated sample(s): 01-02 Batch: WG823240-1 WG823240-2								
1,2,4-Trichlorobenzene	100		95		70-130	5		20
1,3,5-Trimethylbenzene	115		112		70-130	3		20
1,2,4-Trimethylbenzene	114		112		70-130	2		20
Ethyl ether	99		100		70-130	1		20
Isopropyl Ether	105		105		70-130	0		20
Ethyl-Tert-Butyl-Ether	110		109		70-130	1		20
Tertiary-Amyl Methyl Ether	102		103		70-130	1		20
1,4-Dioxane	70		108		70-130	**43**	Q	20

Surrogate	LCS %Recovery	Qual	LCSD %Recovery	Qual	Acceptance Criteria
1,2-Dichloroethane-d4	114		116		70-130
Toluene-d8	102		101		70-130
4-Bromofluorobenzene	103		102		70-130
Dibromofluoromethane	108		109		70-130

PCBS

Project Name: NBHS IRA O&M
Project Number: 115058
Lab Number: L1522562
Report Date: 09/21/15

SAMPLE RESULTS

Lab ID:	L1522562-01	D	Date Collected:	09/14/15 10:30
Client ID:	INFLUENT		Date Received:	09/14/15
Sample Location:	NEW BEDFORD, MA		Field Prep:	Not Specified
Matrix:	Water		Extraction Method:	EPA 3510C
Analytical Method:	97,8082A		Extraction Date:	09/18/15 06:20
Analytical Date:	09/21/15 13:24		Cleanup Method:	EPA 3665A
Analyst:	JT		Cleanup Date:	09/18/15
			Cleanup Method:	EPA 3660B
			Cleanup Date:	09/18/15

Parameter	Result	Qualifier	Units	RL	MDL	Dilution Factor	Column
MCP Polychlorinated Biphenyls - Westborough Lab							
Aroclor 1016	ND		ug/l	1.25	--	5	A
Aroclor 1221	ND		ug/l	1.25	--	5	A
Aroclor 1232	ND		ug/l	1.25	--	5	A
Aroclor 1242	ND		ug/l	1.25	--	5	A
Aroclor 1248	ND		ug/l	1.25	--	5	A
Aroclor 1254	14.3		ug/l	1.25	--	5	B
Aroclor 1260	ND		ug/l	1.25	--	5	A
Aroclor 1262	ND		ug/l	1.25	--	5	A
Aroclor 1268	ND		ug/l	1.25	--	5	A
PCBs, Total	14.3		ug/l	1.25	--	5	A

Surrogate	% Recovery	Qualifier	Acceptance Criteria	Column
2,4,5,6-Tetrachloro-m-xylene	89		30-150	A
Decachlorobiphenyl	78		30-150	A
2,4,5,6-Tetrachloro-m-xylene	91		30-150	B
Decachlorobiphenyl	68		30-150	B

Project Name: NBHS IRA O&M
Project Number: 115058

Lab Number: L1522562
Report Date: 09/21/15

SAMPLE RESULTS

Lab ID:	L1522562-02
Client ID:	EFFLUENT
Sample Location:	NEW BEDFORD, MA
Matrix:	Water
Analytical Method:	97,8082A
Analytical Date:	09/18/15 18:18
Analyst:	JT

Date Collected:	09/14/15 11:00
Date Received:	09/14/15
Field Prep:	Not Specified
Extraction Method:	EPA 3510C
Extraction Date:	09/18/15 06:20
Cleanup Method:	EPA 3665A
Cleanup Date:	09/18/15
Cleanup Method:	EPA 3660B
Cleanup Date:	09/18/15

Parameter	Result	Qualifier	Units	RL	MDL	Dilution Factor	Column
MCP Polychlorinated Biphenyls - Westborough Lab							
Aroclor 1016	ND		ug/l	0.250	--	1	A
Aroclor 1221	ND		ug/l	0.250	--	1	A
Aroclor 1232	ND		ug/l	0.250	--	1	A
Aroclor 1242	ND		ug/l	0.250	--	1	A
Aroclor 1248	ND		ug/l	0.250	--	1	A
Aroclor 1254	ND		ug/l	0.250	--	1	A
Aroclor 1260	ND		ug/l	0.250	--	1	A
Aroclor 1262	ND		ug/l	0.250	--	1	A
Aroclor 1268	ND		ug/l	0.250	--	1	A
PCBs, Total	ND		ug/l	0.250	--	1	A

Surrogate	% Recovery	Qualifier	Acceptance Criteria	Column
2,4,5,6-Tetrachloro-m-xylene	72		30-150	A
Decachlorobiphenyl	64		30-150	A
2,4,5,6-Tetrachloro-m-xylene	72		30-150	B
Decachlorobiphenyl	59		30-150	B

Project Name: NBHS IRA O&M

Project Number: 115058

Lab Number: L1522562

Report Date: 09/21/15

Method Blank Analysis
Batch Quality Control

Analytical Method: 97,8082A
Analytical Date: 09/18/15 18:31
Analyst: JT

Extraction Method: EPA 3510C
Extraction Date: 09/18/15 06:20
Cleanup Method: EPA 3665A
Cleanup Date: 09/18/15
Cleanup Method: EPA 3660B
Cleanup Date: 09/18/15

Parameter	Result	Qualifier	Units	RL	MDL	Column
MCP Polychlorinated Biphenyls - Westborough Lab for sample(s): 01-02 Batch: WG822570-1						
Aroclor 1016	ND		ug/l	0.250	--	A
Aroclor 1221	ND		ug/l	0.250	--	A
Aroclor 1232	ND		ug/l	0.250	--	A
Aroclor 1242	ND		ug/l	0.250	--	A
Aroclor 1248	ND		ug/l	0.250	--	A
Aroclor 1254	ND		ug/l	0.250	--	A
Aroclor 1260	ND		ug/l	0.250	--	A
Aroclor 1262	ND		ug/l	0.250	--	A
Aroclor 1268	ND		ug/l	0.250	--	A
PCBs, Total	ND		ug/l	0.250	--	A

Surrogate	%Recovery	Qualifier	Acceptance Criteria	Column
2,4,5,6-Tetrachloro-m-xylene	54		30-150	A
Decachlorobiphenyl	61		30-150	A
2,4,5,6-Tetrachloro-m-xylene	54		30-150	B
Decachlorobiphenyl	55		30-150	B

Lab Control Sample Analysis
Batch Quality Control

Project Name: NBHS IRA O&M
Project Number: 115058

Lab Number: L1522562
Report Date: 09/21/15

Parameter	LCS %Recovery	Qual	LCSD %Recovery	Qual	%Recovery Limits	RPD	Qual	RPD Limits	Column
MCP Polychlorinated Biphenyls - Westborough Lab Associated sample(s): 01-02 Batch: WG822570-2 WG822570-3									
Aroclor 1016	81		84		40-140	3		20	A
Aroclor 1260	76		77		40-140	2		20	A

Surrogate	LCS %Recovery	Qual	LCSD %Recovery	Qual	Acceptance Criteria	Column
2,4,5,6-Tetrachloro-m-xylene	67		67		30-150	A
Decachlorobiphenyl	67		70		30-150	A
2,4,5,6-Tetrachloro-m-xylene	66		65		30-150	B
Decachlorobiphenyl	60		61		30-150	B

Project Name: NBHS IRA O&M
Project Number: 115058

Lab Number: L1522562
Report Date: 09/21/15

Sample Receipt and Container Information

Were project specific reporting limits specified? YES

Reagent H2O Preserved Vials Frozen on: NA

Cooler Information	Custody Seal
Cooler	
A	Absent

Container Information

Container ID	Container Type	Cooler	pH	Temp deg C	Pres	Seal	Analysis(*)
L1522562-01A	Vial HCl preserved	A	N/A	4.0	Y	Absent	MCP-8260-10(14)
L1522562-01B	Vial HCl preserved	A	N/A	4.0	Y	Absent	MCP-8260-10(14)
L1522562-01C	Vial HCl preserved	A	N/A	4.0	Y	Absent	MCP-8260-10(14)
L1522562-01D	Amber 1000ml unpreserved	A	7	4.0	Y	Absent	MCP-8082-10(365)
L1522562-01E	Amber 1000ml unpreserved	A	7	4.0	Y	Absent	MCP-8082-10(365)
L1522562-02A	Vial HCl preserved	A	N/A	4.0	Y	Absent	MCP-8260-10(14)
L1522562-02B	Vial HCl preserved	A	N/A	4.0	Y	Absent	MCP-8260-10(14)
L1522562-02C	Vial HCl preserved	A	N/A	4.0	Y	Absent	MCP-8260-10(14)
L1522562-02D	Amber 1000ml unpreserved	A	7	4.0	Y	Absent	MCP-8082-10(365)
L1522562-02E	Amber 1000ml unpreserved	A	7	4.0	Y	Absent	MCP-8082-10(365)

*Values in parentheses indicate holding time in days

Project Name:	NBHS IRA O&M	**Lab Number:**	L1522562
Project Number:	115058	**Report Date:**	09/21/15

GLOSSARY

Acronyms

EDL	- Estimated Detection Limit: This value represents the level to which target analyte concentrations are reported as estimated values, when those target analyte concentrations are quantified below the reporting limit (RL). The EDL includes any adjustments from dilutions, concentrations or moisture content, where applicable. The use of EDLs is specific to the analysis of PAHs using Solid-Phase Microextraction (SPME).
EPA	- Environmental Protection Agency.
LCS	- Laboratory Control Sample: A sample matrix, free from the analytes of interest, spiked with verified known amounts of analytes or a material containing known and verified amounts of analytes.
LCSD	- Laboratory Control Sample Duplicate: Refer to LCS.
LFB	- Laboratory Fortified Blank: A sample matrix, free from the analytes of interest, spiked with verified known amounts of analytes or a material containing known and verified amounts of analytes.
MDL	- Method Detection Limit: This value represents the level to which target analyte concentrations are reported as estimated values, when those target analyte concentrations are quantified below the reporting limit (RL). The MDL includes any adjustments from dilutions, concentrations or moisture content, where applicable.
MS	- Matrix Spike Sample: A sample prepared by adding a known mass of target analyte to a specified amount of matrix sample for which an independent estimate of target analyte concentration is available.
MSD	- Matrix Spike Sample Duplicate: Refer to MS.
NA	- Not Applicable.
NC	- Not Calculated: Term is utilized when one or more of the results utilized in the calculation are non-detect at the parameter's reporting unit.
NI	- Not Ignitable.
NP	- Non-Plastic: Term is utilized for the analysis of Atterberg Limits in soil.
RL	- Reporting Limit: The value at which an instrument can accurately measure an analyte at a specific concentration. The RL includes any adjustments from dilutions, concentrations or moisture content, where applicable.
RPD	- Relative Percent Difference: The results from matrix and/or matrix spike duplicates are primarily designed to assess the precision of analytical results in a given matrix and are expressed as relative percent difference (RPD). Values which are less than five times the reporting limit for any individual parameter are evaluated by utilizing the absolute difference between the values; although the RPD value will be provided in the report.
SRM	- Standard Reference Material: A reference sample of a known or certified value that is of the same or similar matrix as the associated field samples.
TIC	- Tentatively Identified Compound: A compound that has been identified to be present and is not part of the target compound list (TCL) for the method and/or program. All TICs are qualitatively identified and reported as estimated concentrations.

Footnotes

1	- The reference for this analyte should be considered modified since this analyte is absent from the target analyte list of the original method.

Terms

Total: With respect to Organic analyses, a 'Total' result is defined as the summation of results for individual isomers or Aroclors. If a 'Total' result is requested, the results of its individual components will also be reported. This is applicable to 'Total' results for methods 8260, 8081 and 8082.

Analytical Method: Both the document from which the method originates and the analytical reference method. (Example: EPA 8260B is shown as 1,8260B.) The codes for the reference method documents are provided in the References section of the Addendum.

Data Qualifiers

A	- Spectra identified as "Aldol Condensation Product".
B	- The analyte was detected above the reporting limit in the associated method blank. Flag only applies to associated field samples that have detectable concentrations of the analyte at less than ten times (10x) the concentration found in the blank. For MCP-related projects, flag only applies to associated field samples that have detectable concentrations of the analyte at less than ten times (10x) the concentration found in the blank. For DOD-related projects, flag only applies to associated field samples that have detectable concentrations of the analyte at less than ten times (10x) the concentration found in the blank AND the analyte was detected above one-half the reporting limit (or above the reporting limit for common lab contaminants) in the associated method blank. For NJ-Air-related projects, flag only applies to associated field samples that have detectable concentrations of the analyte above the reporting limit. For NJ-related projects (excluding Air), flag only applies to associated field samples that have detectable concentrations of the analyte, which was detected above the reporting limit in the associated method blank or above five times the reporting limit for common lab contaminants (Phthalates, Acetone, Methylene Chloride, 2-Butanone).
C	- Co-elution: The target analyte co-elutes with a known lab standard (i.e. surrogate, internal standards, etc.) for co-extracted analyses.

Report Format: Data Usability Report

Project Name:	NBHS IRA O&M	**Lab Number:**	L1522562
Project Number:	115058	**Report Date:**	09/21/15

Data Qualifiers

D - Concentration of analyte was quantified from diluted analysis. Flag only applies to field samples that have detectable concentrations of the analyte.

E - Concentration of analyte exceeds the range of the calibration curve and/or linear range of the instrument.

G - The concentration may be biased high due to matrix interferences (i.e, co-elution) with non-target compound(s). The result should be considered estimated.

H - The analysis of pH was performed beyond the regulatory-required holding time of 15 minutes from the time of sample collection.

I - The lower value for the two columns has been reported due to obvious interference.

M - Reporting Limit (RL) exceeds the MCP CAM Reporting Limit for this analyte.

NJ - Presumptive evidence of compound. This represents an estimated concentration for Tentatively Identified Compounds (TICs), where the identification is based on a mass spectral library search.

P - The RPD between the results for the two columns exceeds the method-specified criteria.

Q - The quality control sample exceeds the associated acceptance criteria. For DOD-related projects, LCS and/or Continuing Calibration Standard exceedences are also qualified on all associated sample results. Note: This flag is not applicable for matrix spike recoveries when the sample concentration is greater than 4x the spike added or for batch duplicate RPD when the sample concentrations are less than 5x the RL. (Metals only.)

R - Analytical results are from sample re-analysis.

RE - Analytical results are from sample re-extraction.

S - Analytical results are from modified screening analysis.

J - Estimated value. This represents an estimated concentration for Tentatively Identified Compounds (TICs).

ND - Not detected at the reporting limit (RL) for the sample.

Report Format: Data Usability Report

Project Name: NBHS IRA O&M **Lab Number:** L1522562
Project Number: 115058 **Report Date:** 09/21/15

REFERENCES

97 EPA Test Methods (SW-846) with QC Requirements & Performance Standards for the Analysis of EPA SW-846 Methods under the Massachusetts Contingency Plan, WSC-CAM-IIA, IIB, IIIA, IIIB, IIIC, IIID, VA, VB, VC, VIA, VIB, VIIIA and VIIIB, July 2010.

LIMITATION OF LIABILITIES

Alpha Analytical performs services with reasonable care and diligence normal to the analytical testing laboratory industry. In the event of an error, the sole and exclusive responsibility of Alpha Analytical shall be to re-perform the work at it's own expense. In no event shall Alpha Analytical be held liable for any incidental, consequential or special damages, including but not limited to, damages in any way connected with the use of, interpretation of, information or analysis provided by Alpha Analytical.

We strongly urge our clients to comply with EPA protocol regarding sample volume, preservation, cooling, containers, sampling procedures, holding time and splitting of samples in the field.

Certification Information

Last revised December 16, 2014

The following analytes are not included in our NELAP Scope of Accreditation:

Westborough Facility
EPA 524.2: Acetone, 2-Butanone (Methyl ethyl ketone (MEK)), Tert-butyl alcohol, 2-Hexanone, Tetrahydrofuran, 1,3,5-Trichlorobenzene, 4-Methyl-2-pentanone (MIBK), Carbon disulfide, Diethyl ether.
EPA 8260C: 1,2,4,5-Tetramethylbenzene, 4-Ethyltoluene, Iodomethane (methyl iodide), Methyl methacrylate, Azobenzene.
EPA 8270D: 1-Methylnaphthalene, Dimethylnaphthalene,1,4-Diphenylhydrazine.
EPA 625: 4-Chloroaniline, 4-Methylphenol.
SM4500: Soil: Total Phosphorus, TKN, NO2, NO3.
EPA 9071: Total Petroleum Hydrocarbons, Oil & Grease.

Mansfield Facility
EPA 8270D: Biphenyl.
EPA 2540D: TSS
EPA TO-15: Halothane, 2,4,4-Trimethyl-2-pentene, 2,4,4-Trimethyl-1-pentene, Thiophene, 2-Methylthiophene, 3-Methylthiophene, 2-Ethylthiophene, 1,2,3-Trimethylbenzene, Indan, Indene, 1,2,4,5-Tetramethylbenzene, Benzothiophene, 1-Methylnaphthalene.

The following analytes are included in our Massachusetts DEP Scope of Accreditation, Westborough Facility:

Drinking Water
EPA 200.8: Sb,As,Ba,Be,Cd,Cr,Cu,Pb,Ni,Se,Tl; **EPA 200.7**: Ba,Be,Ca,Cd,Cr,Cu,Na; **EPA 245.1:** Mercury;
EPA 300.0: Nitrate-N, Fluoride, Sulfate; **EPA 353.2**: Nitrate-N, Nitrite-N; **SM4500NO3-F**: Nitrate-N, Nitrite-N; **SM4500F-C, SM4500CN-CE, EPA 180.1, SM2130B, SM4500Cl-D, SM2320B, SM2540C, SM4500H-B**
EPA 332: Perchlorate.
Microbiology: **SM9215B; SM9223-P/A, SM9223B-Colilert-QT, Enterolert-QT.**

Non-Potable Water
EPA 200.8: Al,Sb,As,Be,Cd,Cr,Cu,Pb,Mn,Ni,Se,Ag,Tl,Zn;
EPA 200.7: Al,Sb,As,Be,Cd,Ca,Cr,Co,Cu,Fe,Pb,Mg,Mn,Mo,Ni,K,Se,Ag,Na,Sr,Ti,Tl,V,Zn;
EPA 245.1, SM4500H,B, EPA 120.1, SM2510B, SM2540C, SM2340B, SM2320B, SM4500CL-E, SM4500F-BC, SM426C, SM4500NH3-BH, **EPA 350.1**: Ammonia-N, **LACHAT 10-107-06-1-B**: Ammonia-N, **SM4500NO3-F,**
EPA 353.2: Nitrate-N**, SM4500NH3-BC-NES, EPA 351.1, SM4500P-E, SM4500P-B, E, SM5220D, EPA 410.4, SM5210B, SM5310C, SM4500CL-D, EPA 1664, SM14 510AC, EPA 420.1, SM4500-CN-CE, SM2540D.**
EPA 624: Volatile Halocarbons & Aromatics,
EPA 608: Chlordane, Toxaphene, Aldrin, alpha-BHC, beta-BHC, gamma-BHC, delta-BHC, Dieldrin, DDD, DDE, DDT, Endosulfan I, Endosulfan II, Endosulfan sulfate, Endrin, Endrin Aldehyde, Heptachlor, Heptachlor Epoxide, PCBs
EPA 625: SVOC (Acid/Base/Neutral Extractables), **EPA 600/4-81-045**: PCB-Oil.
Microbiology: **SM9223B-Colilert-QT; Enterolert-QT, SM9222D-MF**.

For a complete listing of analytes and methods, please contact your Alpha Project Manager.

CHAIN OF CUSTODY

PAGE 1 OF 1

ALPHA ANALYTICAL

8 Walkup Drive
Westboro, MA 01581
Tel: 508-898-9220

320 Forbes Blvd
Mansfield, MA 02048
Tel: 508-822-9300

Date Rec'd in Lab: 9/14/15

ALPHA Job #: L1522562

Project Information

Project Name: NBHS IRA O&M
Project Location: NEW BEDFORD MA
Project #: 115058
Project Manager: DAVID SULLIVAN
ALPHA Quote #:

Report Information - Data Deliverables

☑ ADEx ☑ EMAIL

Billing Information

☐ Same as Client info PO #: C115058

Client Information

Client: TRC
Address: 650 SUFFOLK ST
LOWELL, MA
Phone: 978-970-5600
Email:

Regulatory Requirements & Project Information Requirements

☑ Yes ☐ No MA MCP Analytical Methods ☐ Yes ☐ No CT RCP Analytical Methods
☐ Yes ☐ No Matrix Spike Required on this SDG? (Required for MCP Inorganics)
☐ Yes ☐ No GW1 Standards (Info Required for Metals & EPH with Targets)
☐ Yes ☐ No NPDES RGP
☐ Other State /Fed Program _____ Criteria _____

Turn-Around Time

☑ Standard ☐ RUSH (only confirmed if pre-approved!)

Date Due: 9/22

Additional Project Information:

ANALYSIS

VOC: ☑ 8260 ☐ 624 ☐ 524.2
SVOC: ☐ ABN ☐ PAH
METALS: ☐ MCP 13 ☐ MCP 14 ☐ RCP 15
METALS: ☐ RCRA5 ☐ RCRA8 ☐ PP13
EPH: ☐ Ranges & Targets ☐ Ranges Only
VPH: ☐ Ranges & Targets ☐ Ranges Only
☑ PCB ☐ PEST
TPH: ☐ Quant Only ☐ Fingerprint

SAMPLE INFO
Filtration
☐ Field
☐ Lab to do
Preservation
☐ Lab to do

ALPHA Lab ID (Lab Use Only)	Sample ID	Collection Date	Collection Time	Sample Matrix	Sampler Initials	VOC	SVOC	METALS	METALS	EPH	VPH	PCB	TPH							Sample Comments	TOTAL # BOTTLES
22 5620 1	INFLUENT	9/14/15	10:30	I	JF	✓						✓									5
02	EFFLUENT	"	11:00	E	JF	✓						✓									5

7A
Volatile Organics CONTINUING CALIBRATION CHECK

Lab Name: Alpha Analytical Labs

SDG No.: L1522562

Instrument ID: Quimby.i Calibration Date: 21-SEP-2015 Time: 05:45

Lab File ID: 0921A01 Init. Calib. Date(s): 27-AUG-2 27-AUG-2

Sample No: 8260 CCAL Init. Calib. Times : 10:54 16:42

Compound	RRF	RRF	MIN RRF	%D	MAX %D	
dichlorodifluoromethane	.3178	.34312	.1	8	20	
chloromethane	.3879	.38286	.1	-1	20	
vinyl chloride	.27935	.3339	.1	20	20	
bromomethane	.22165	.12433	.1	-44	20	F
chloroethane	.20672	.25932	.1	25	20	F
trichlorofluoromethane	.44985	.54464	.1	21	20	F
ethyl ether	.15284	.15152	.05	-1	20	
acetone	.10613	.07267	.1	-32	20	F
1,1,-dichloroethene	.2835	.2918	.1	3	20	
methylene chloride	.32566	.34425	.1	6	20	
carbon disulfide	.80931	.85456	.1	6	20	
methyl tert butyl ether	.49987	.51514	.1	3	20	
trans-1,2-dichloroethene	.30391	.32384	.1	7	20	
Diisopropyl Ether	1.1586	1.2177	.05	5	20	
1,1-dichloroethane	.60553	.69961	.2	16	20	
Ethyl-Tert-Butyl-Ether	.77193	.85002	.05	10	20	
2-butanone	.09985	.07874	.1	-21	20	F
2,2-dichloropropane	.1749	.26283	.05	50	20	F
cis-1,2-dichloroethene	.33476	.36174	.1	8	20	
chloroform	.53402	.61766	.2	16	20	
bromochloromethane	.14203	.15134	.05	7	20	
tetrahydrofuran	.06266	.05344	.05	-15	20	
1,1,1-trichloroethane	.37689	.43821	.1	16	20	
1,1-dichloropropene	.44179	.4767	.05	8	20	
carbontetrachloride	100	90.519	.1	-9	20	
Tertiary-Amyl Methyl Ether	.58425	.59714	.05	2	20	
1,2-dichloroethane	.39928	.47687	.1	19	20	
benzene	1.3405	1.4504	.5	8	20	
trichloroethene	.32429	.35305	.2	9	20	
1,2-dichloropropane	.36903	.38783	.1	5	20	
bromodichloromethane	.35071	.36697	.2	5	20	
1,4-dioxane	.00213	.0015	.05	-30	20	F
dibromomethane	.14698	.16607	.05	13	20	
4-methyl-2-pentanone	.08279	.07234	.1	-13	20	F
cis-1,3-dichloropropene	100	93.200	.2	-7	20	
toluene	1.0372	1.1167	.4	8	20	
trans-1,3-dichloropropene	100	91.188	.1	-9	20	
1,1,2-trichloroethane	.22554	.23629	.1	5	20	

FORM VII MCP-8260-10

7A
CONTINUING CALIBRATION CHECK

Lab Name: Alpha Analytical Labs

SDG No.: L1522562

Instrument ID: Quimby.i Calibration Date: 21-SEP-2015 Time: 05:45

Lab File ID: 0921A01 Init. Calib. Date(s): 27-AUG-2 27-AUG-2

Sample No: 8260 CCAL Init. Calib. Times : 10:54 16:42

Compound	$\overline{RRF}$	RRF	MIN RRF	%D	MAX %D	
2-hexanone	.17513	.1471	.1	-16	20	
1,3-dichloropropane	.4787	.51849	.05	8	20	
tetrachloroethene	.42793	.46798	.2	9	20	
chlorodibromomethane	.25746	.23725	.1	-8	20	
1,2-dibromoethane	.22721	.25123	.1	11	20	
chlorobenzene	1.1694	1.2884	.5	10	20	
1,1,1,2-tetrachloroethane	.31281	.32032	.05	2	20	
ethyl benzene	2.0206	2.2935	.1	14	20	
p/m xylene	.82118	.94432	.1	15	20	
o xylene	.77852	.89155	.3	15	20	
styrene	1.2529	1.4529	.31	16	20	
isopropylbenzene	2.1460	2.4487	.1	14	20	
bromoform	.22811	.17562	.1	-23	20	F
1,1,2,2,-tetrachloroethane	.54994	.52628	.3	-4	20	
1,2,3-trichloropropane	.43062	.44048	.05	2	20	
n-propylbenzene	4.2689	4.7153	.05	10	20	
bromobenzene	.87421	.93766	.05	7	20	
1,3,5-trimethybenzene	3.1821	3.6546	.05	15	20	
2-chlorotoluene	2.9413	3.4321	.05	17	20	
4-chorotoluene	2.7197	3.0745	.05	13	20	
tert-butylbenzene	2.8059	2.9371	.05	5	20	
1,2,4-trimethylbenzene	3.0531	3.4693	.05	14	20	
sec-butylbenzene	4.0756	4.3144	.05	6	20	
p-isopropyltoluene	3.4102	3.5982	.05	6	20	
1,3-dichlorobenzene	1.7885	1.9638	.6	10	20	
1,4-dichlorobenzene	1.7518	1.8729	.5	7	20	
n-butylbenzene	3.3211	3.7124	.05	12	20	
1,2-dichlorobenzene	1.5850	1.6947	.4	7	20	
1,2-dibromo-3-chloropropane	100	82.751	.05	-17	20	
1,2,4-trichlorobenzene	.82014	.82181	.2	0	20	
hexachlorobutadiene	.51023	.48974	.05	-4	20	
naphthalene	1.3049	1.1266	.05	-14	20	
1,2,3-trichlorobenzene	.66545	.58219	.05	-13	20	
dibromofluoromethane	.22448	.24146	.05	8	20	
1,2-dichloroethane-d4	.26126	.29801	.05	14	20	
toluene-d8	1.1878	1.2128	.05	2	20	
4-bromofluorobenzene	.90347	.92757	.05	3	20	

FORM VII MCP-8260-10

ANALYTICAL REPORT

Lab Number:	L1525997
Client:	TRC Environmental Consultants Wannalancit Mills 650 Suffolk Street Lowell, MA 01854
ATTN:	David Sullivan
Phone:	(978) 656-3565
Project Name:	NBHS
Project Number:	115058
Report Date:	10/29/15

The original project report/data package is held by Alpha Analytical. This report/data package is paginated and should be reproduced only in its entirety. Alpha Analytical holds no responsibility for results and/or data that are not consistent with the original.

Certifications & Approvals: MA (M-MA086), NY (11148), CT (PH-0574), NH (2003), NJ NELAP (MA935), RI (LAO00065), ME (MA00086), PA (68-03671), VA (460195), MD (348), IL (200077), NC (666), TX (T104704476), DOD (L2217), USDA (Permit #P-330-11-00240).

Eight Walkup Drive, Westborough, MA 01581-1019
508-898-9220 (Fax) 508-898-9193 800-624-9220 - www.alphalab.com

Project Name: NBHS
Project Number: 115058

Lab Number: L1525997
Report Date: 10/29/15

Alpha Sample ID	Client ID	Matrix	Sample Location	Collection Date/Time	Receive Date
L1525997-01	INFLUENT	WATER	NEW BEDFORD	10/13/15 09:45	10/14/15
L1525997-02	EFFLUENT	WATER	NEW BEDFORD	10/13/15 08:15	10/14/15
L1525997-03	TRIP BLANK	WATER	NEW BEDFORD	10/08/15 00:00	10/14/15

Project Name: NBHS **Lab Number:** L1525997

Project Number: 115058 **Report Date:** 10/29/15

MADEP MCP Response Action Analytical Report Certification

This form provides certifications for all samples performed by MCP methods. Please refer to the Sample Results and Container Information sections of this report for specification of MCP methods used for each analysis. The following questions pertain only to MCP Analytical Methods.

An affirmative response to questions A through F is required for "Presumptive Certainty" status		
A	Were all samples received in a condition consistent with those described on the Chain-of-Custody, properly preserved (including temperature) in the field or laboratory, and prepared/analyzed within method holding times?	YES
B	Were the analytical method(s) and all associated QC requirements specified in the selected CAM protocol(s) followed?	YES
C	Were all required corrective actions and analytical response actions specified in the selected CAM protocol(s) implemented for all identified performance standard non-conformances?	YES
D	Does the laboratory report comply with all the reporting requirements specified in CAM VII A, "Quality Assurance and Quality Control Guidelines for the Acquisition and Reporting of Analytical Data?"	YES
E a.	VPH, EPH, and APH Methods only: Was each method conducted without significant modification(s)? (Refer to the individual method(s) for a list of significant modifications).	N/A
E b.	APH and TO-15 Methods only: Was the complete analyte list reported for each method?	N/A
F	Were all applicable CAM protocol QC and performance standard non-conformances identified and evaluated in a laboratory narrative (including all "No" responses to Questions A through E)?	YES

A response to questions G, H and I is required for "Presumptive Certainty" status		
G	Were the reporting limits at or below all CAM reporting limits specified in the selected CAM protocol(s)?	NO
H	Were all QC performance standards specified in the CAM protocol(s) achieved?	NO
I	Were results reported for the complete analyte list specified in the selected CAM protocol(s)?	YES

For any questions answered "No", please refer to the case narrative section on the following page(s).

Please note that sample matrix information is located in the Sample Results section of this report.

Project Name: NBHS
Project Number: 115058

Lab Number: L1525997
Report Date: 10/29/15

Case Narrative

The samples were received in accordance with the Chain of Custody and no significant deviations were encountered during the preparation or analysis unless otherwise noted. Sample Receipt, Container Information, and the Chain of Custody are located at the back of the report.

Results contained within this report relate only to the samples submitted under this Alpha Lab Number and meet all of the requirements of NELAC, for all NELAC accredited parameters. The data presented in this report is organized by parameter (i.e. VOC, SVOC, etc.). Sample specific Quality Control data (i.e. Surrogate Spike Recovery) is reported at the end of the target analyte list for each individual sample, followed by the Laboratory Batch Quality Control at the end of each parameter. Tentatively Identified Compounds (TICs), if requested, are reported for compounds identified to be present and are not part of the method/program Target Compound List, even if only a subset of the TCL are being reported. If a sample was re-analyzed or re-extracted due to a required quality control corrective action and if both sets of data are reported, the Laboratory ID of the re-analysis or re-extraction is designated with an "R" or "RE", respectively. When multiple Batch Quality Control elements are reported (e.g. more than one LCS), the associated samples for each element are noted in the grey shaded header line of each data table. Any Laboratory Batch, Sample Specific % recovery or RPD value that is outside the listed Acceptance Criteria is bolded in the report. All specific QC information is also incorporated in the Data Usability format of our Data Merger tool where it can be reviewed along with any associated usability implications. Soil/sediments, solids and tissues are reported on a dry weight basis unless otherwise noted. Definitions of all data qualifiers and acronyms used in this report are provided in the Glossary located at the back of the report.

In reference to questions H (CAM) or 4 (RCP) when "NO" is checked, the performance criteria for CAM and RCP methods allow for some quality control failures to occur and still be within method compliance. In these instances the specific failure is not narrated but noted in the associated QC table. The information is also incorporated in the Data Usability format of our Data Merger tool where it can be reviewed along with any associated usability implications.

Please see the associated ADEx data file for a comparison of laboratory reporting limits that were achieved with the regulatory Numerical Standards requested on the Chain of Custody.

HOLD POLICY
For samples submitted on hold, Alpha's policy is to hold samples (with the exception of Air canisters) free of charge for 21 calendar days from the date the project is completed. After 21 calendar days, we will dispose of all samples submitted including those put on hold unless you have contacted your Client Service Representative and made arrangements for Alpha to continue to hold the samples. Air canisters will be disposed after 3 business days from the date the project is completed.

Please contact Client Services at 800-624-9220 with any questions.

Project Name: NBHS **Lab Number:** L1525997
Project Number: 115058 **Report Date:** 10/29/15

Case Narrative (continued)

MCP Related Narratives

Sample Receipt

The sampling times were amended at the client's request.

Volatile Organics

In reference to question H:

The surrogate recovery for L1525997-03 is above the acceptance criteria for 4-bromofluorobenzene (132%). Since the sample was non-detect for all target analytes, re-analysis was not required.

The WG834112-1 LCS recovery, associated with L1525997-01 and -02, is below the individual acceptance criteria for 1,2-dibromo-3-chloropropane (LCS, 67%), but within the overall method allowances. The results of the associated samples are reported; however, all results are considered to have a potentially low bias for this compound.

The WG834503-1/-2 LCS/LCSD recoveries, associated with L1525997-03, are below the individual acceptance criteria for methyl tert butyl ether (69%) and naphthalene (69%/67%), but within the overall method allowances. The results of the associated samples are reported; however, all results are considered to have a potentially low bias for these compounds. In addition, the LCS/LCSD RPDs are above the acceptance criteria for trans-1,2-dichloroethene (22%) and acetone (21%).

The initial calibration, associated with L1525997-01 and -02, did not meet the method required minimum response factor on the lowest calibration standard for 2-butanone (0.09378), 4-methyl-2-pentanone (0.06143) and 1,4-dioxane (0.00115), as well as the average response factor for 2-butanone, 4-methyl-2-pentanone, and 1,4-dioxane.

The initial calibration, associated with L1525997-03, did not meet the method required minimum response factor on the lowest calibration standard for 1,4-dioxane (0.00205), as well as the average response factor for 1,4-dioxane.

The continuing calibration standards, associated with L1525997-01 through -03, are outside the acceptance criteria for several compounds; however, they are within overall method allowances. Copies of the continuing calibration standards are included as an addendum to this report.

Project Name: NBHS **Lab Number:** L1525997
Project Number: 115058 **Report Date:** 10/29/15

Case Narrative (continued)

PCBs

In reference to question G:

L1525997-01: The sample has elevated detection limits due to the dilution required by the elevated concentrations of target compounds in the sample; therefore, one or more of the target analytes did not achieve the requested CAM reporting limits.

In reference to question H:

L1525997-01: The surrogate recoveries are below the acceptance criteria for 2,4,5,6-tetrachloro-m-xylene (0%) and decachlorobiphenyl (0%) due to the dilution required to quantitate the sample. Re-extraction was not required; therefore, the results of the original analysis are reported.

I, the undersigned, attest under the pains and penalties of perjury that, to the best of my knowledge and belief and based upon my personal inquiry of those responsible for providing the information contained in this analytical report, such information is accurate and complete. This certificate of analysis is not complete unless this page accompanies any and all pages of this report.

Authorized Signature: Lisa Westerlind

Title: Technical Director/Representative Date: 10/29/15

ORGANICS

VOLATILES

Project Name: NBHS
Project Number: 115058

Lab Number: L1525997
Report Date: 10/29/15

SAMPLE RESULTS

Lab ID: L1525997-01
Client ID: INFLUENT
Sample Location: NEW BEDFORD
Matrix: Water
Analytical Method: 97,8260C
Analytical Date: 10/26/15 14:40
Analyst: MM

Date Collected: 10/13/15 09:45
Date Received: 10/14/15
Field Prep: Not Specified

Parameter	Result	Qualifier	Units	RL	MDL	Dilution Factor
MCP Volatile Organics - Westborough Lab						
Methylene chloride	ND		ug/l	2.0	--	1
1,1-Dichloroethane	ND		ug/l	1.0	--	1
Chloroform	ND		ug/l	1.0	--	1
Carbon tetrachloride	ND		ug/l	1.0	--	1
1,2-Dichloropropane	ND		ug/l	1.0	--	1
Dibromochloromethane	ND		ug/l	1.0	--	1
1,1,2-Trichloroethane	ND		ug/l	1.0	--	1
Tetrachloroethene	ND		ug/l	1.0	--	1
Chlorobenzene	ND		ug/l	1.0	--	1
Trichlorofluoromethane	ND		ug/l	2.0	--	1
1,2-Dichloroethane	ND		ug/l	1.0	--	1
1,1,1-Trichloroethane	ND		ug/l	1.0	--	1
Bromodichloromethane	ND		ug/l	1.0	--	1
trans-1,3-Dichloropropene	ND		ug/l	0.50	--	1
cis-1,3-Dichloropropene	ND		ug/l	0.50	--	1
1,3-Dichloropropene, Total	ND		ug/l	0.50	--	1
1,1-Dichloropropene	ND		ug/l	2.0	--	1
Bromoform	ND		ug/l	2.0	--	1
1,1,2,2-Tetrachloroethane	ND		ug/l	1.0	--	1
Benzene	ND		ug/l	0.50	--	1
Toluene	ND		ug/l	1.0	--	1
Ethylbenzene	ND		ug/l	1.0	--	1
Chloromethane	ND		ug/l	2.0	--	1
Bromomethane	ND		ug/l	2.0	--	1
Vinyl chloride	5.6		ug/l	1.0	--	1
Chloroethane	ND		ug/l	2.0	--	1
1,1-Dichloroethene	ND		ug/l	1.0	--	1
trans-1,2-Dichloroethene	3.6		ug/l	1.0	--	1
Trichloroethene	2.1		ug/l	1.0	--	1
1,2-Dichlorobenzene	ND		ug/l	1.0	--	1

Project Name: NBHS **Lab Number:** L1525997

Project Number: 115058 **Report Date:** 10/29/15

SAMPLE RESULTS

Lab ID: L1525997-01 Date Collected: 10/13/15 09:45

Client ID: INFLUENT Date Received: 10/14/15

Sample Location: NEW BEDFORD Field Prep: Not Specified

Parameter	Result	Qualifier	Units	RL	MDL	Dilution Factor
MCP Volatile Organics - Westborough Lab						
1,3-Dichlorobenzene	ND		ug/l	1.0	--	1
1,4-Dichlorobenzene	2.7		ug/l	1.0	--	1
Methyl tert butyl ether	ND		ug/l	2.0	--	1
p/m-Xylene	ND		ug/l	2.0	--	1
o-Xylene	ND		ug/l	1.0	--	1
Xylene (Total)	ND		ug/l	1.0	--	1
cis-1,2-Dichloroethene	7.8		ug/l	1.0	--	1
1,2-Dichloroethene (total)	11		ug/l	1.0	--	1
Dibromomethane	ND		ug/l	2.0	--	1
1,2,3-Trichloropropane	ND		ug/l	2.0	--	1
Styrene	ND		ug/l	1.0	--	1
Dichlorodifluoromethane	ND		ug/l	2.0	--	1
Acetone	ND		ug/l	5.0	--	1
Carbon disulfide	ND		ug/l	2.0	--	1
2-Butanone	ND		ug/l	5.0	--	1
4-Methyl-2-pentanone	ND		ug/l	5.0	--	1
2-Hexanone	ND		ug/l	5.0	--	1
Bromochloromethane	ND		ug/l	2.0	--	1
Tetrahydrofuran	ND		ug/l	2.0	--	1
2,2-Dichloropropane	ND		ug/l	2.0	--	1
1,2-Dibromoethane	ND		ug/l	2.0	--	1
1,3-Dichloropropane	ND		ug/l	2.0	--	1
1,1,1,2-Tetrachloroethane	ND		ug/l	1.0	--	1
Bromobenzene	ND		ug/l	2.0	--	1
n-Butylbenzene	ND		ug/l	2.0	--	1
sec-Butylbenzene	ND		ug/l	2.0	--	1
tert-Butylbenzene	ND		ug/l	2.0	--	1
o-Chlorotoluene	ND		ug/l	2.0	--	1
p-Chlorotoluene	ND		ug/l	2.0	--	1
1,2-Dibromo-3-chloropropane	ND		ug/l	2.0	--	1
Hexachlorobutadiene	ND		ug/l	0.60	--	1
Isopropylbenzene	ND		ug/l	2.0	--	1
p-Isopropyltoluene	ND		ug/l	2.0	--	1
Naphthalene	ND		ug/l	2.0	--	1
n-Propylbenzene	ND		ug/l	2.0	--	1
1,2,3-Trichlorobenzene	ND		ug/l	2.0	--	1
1,2,4-Trichlorobenzene	ND		ug/l	2.0	--	1
1,3,5-Trimethylbenzene	ND		ug/l	2.0	--	1
1,2,4-Trimethylbenzene	ND		ug/l	2.0	--	1

Project Name: NBHS **Lab Number:** L1525997

Project Number: 115058 **Report Date:** 10/29/15

SAMPLE RESULTS

Lab ID: L1525997-01 Date Collected: 10/13/15 09:45

Client ID: INFLUENT Date Received: 10/14/15

Sample Location: NEW BEDFORD Field Prep: Not Specified

Parameter	Result	Qualifier	Units	RL	MDL	Dilution Factor
MCP Volatile Organics - Westborough Lab						
Ethyl ether	ND		ug/l	2.0	--	1
Isopropyl Ether	ND		ug/l	2.0	--	1
Ethyl-Tert-Butyl-Ether	ND		ug/l	2.0	--	1
Tertiary-Amyl Methyl Ether	ND		ug/l	2.0	--	1
1,4-Dioxane	ND		ug/l	250	--	1

Surrogate	% Recovery	Qualifier	Acceptance Criteria
1,2-Dichloroethane-d4	99		70-130
Toluene-d8	101		70-130
4-Bromofluorobenzene	98		70-130
Dibromofluoromethane	101		70-130

Project Name: NBHS
Project Number: 115058
Lab Number: L1525997
Report Date: 10/29/15

SAMPLE RESULTS

Lab ID: L1525997-02
Client ID: EFFLUENT
Sample Location: NEW BEDFORD
Matrix: Water
Analytical Method: 97,8260C
Analytical Date: 10/26/15 14:08
Analyst: MM

Date Collected: 10/13/15 08:15
Date Received: 10/14/15
Field Prep: Not Specified

Parameter	Result	Qualifier	Units	RL	MDL	Dilution Factor
MCP Volatile Organics - Westborough Lab						
Methylene chloride	ND		ug/l	2.0	--	1
1,1-Dichloroethane	ND		ug/l	1.0	--	1
Chloroform	ND		ug/l	1.0	--	1
Carbon tetrachloride	ND		ug/l	1.0	--	1
1,2-Dichloropropane	ND		ug/l	1.0	--	1
Dibromochloromethane	ND		ug/l	1.0	--	1
1,1,2-Trichloroethane	ND		ug/l	1.0	--	1
Tetrachloroethene	ND		ug/l	1.0	--	1
Chlorobenzene	ND		ug/l	1.0	--	1
Trichlorofluoromethane	ND		ug/l	2.0	--	1
1,2-Dichloroethane	ND		ug/l	1.0	--	1
1,1,1-Trichloroethane	ND		ug/l	1.0	--	1
Bromodichloromethane	ND		ug/l	1.0	--	1
trans-1,3-Dichloropropene	ND		ug/l	0.50	--	1
cis-1,3-Dichloropropene	ND		ug/l	0.50	--	1
1,3-Dichloropropene, Total	ND		ug/l	0.50	--	1
1,1-Dichloropropene	ND		ug/l	2.0	--	1
Bromoform	ND		ug/l	2.0	--	1
1,1,2,2-Tetrachloroethane	ND		ug/l	1.0	--	1
Benzene	ND		ug/l	0.50	--	1
Toluene	ND		ug/l	1.0	--	1
Ethylbenzene	ND		ug/l	1.0	--	1
Chloromethane	ND		ug/l	2.0	--	1
Bromomethane	ND		ug/l	2.0	--	1
Vinyl chloride	ND		ug/l	1.0	--	1
Chloroethane	ND		ug/l	2.0	--	1
1,1-Dichloroethene	ND		ug/l	1.0	--	1
trans-1,2-Dichloroethene	26		ug/l	1.0	--	1
Trichloroethene	ND		ug/l	1.0	--	1
1,2-Dichlorobenzene	ND		ug/l	1.0	--	1

Project Name: NBHS **Lab Number:** L1525997

Project Number: 115058 **Report Date:** 10/29/15

SAMPLE RESULTS

Lab ID: L1525997-02 Date Collected: 10/13/15 08:15

Client ID: EFFLUENT Date Received: 10/14/15

Sample Location: NEW BEDFORD Field Prep: Not Specified

Parameter	Result	Qualifier	Units	RL	MDL	Dilution Factor
MCP Volatile Organics - Westborough Lab						
1,3-Dichlorobenzene	ND		ug/l	1.0	--	1
1,4-Dichlorobenzene	ND		ug/l	1.0	--	1
Methyl tert butyl ether	ND		ug/l	2.0	--	1
p/m-Xylene	ND		ug/l	2.0	--	1
o-Xylene	ND		ug/l	1.0	--	1
Xylene (Total)	ND		ug/l	1.0	--	1
cis-1,2-Dichloroethene	28		ug/l	1.0	--	1
1,2-Dichloroethene (total)	54		ug/l	1.0	--	1
Dibromomethane	ND		ug/l	2.0	--	1
1,2,3-Trichloropropane	ND		ug/l	2.0	--	1
Styrene	ND		ug/l	1.0	--	1
Dichlorodifluoromethane	ND		ug/l	2.0	--	1
Acetone	ND		ug/l	5.0	--	1
Carbon disulfide	ND		ug/l	2.0	--	1
2-Butanone	ND		ug/l	5.0	--	1
4-Methyl-2-pentanone	ND		ug/l	5.0	--	1
2-Hexanone	ND		ug/l	5.0	--	1
Bromochloromethane	ND		ug/l	2.0	--	1
Tetrahydrofuran	ND		ug/l	2.0	--	1
2,2-Dichloropropane	ND		ug/l	2.0	--	1
1,2-Dibromoethane	ND		ug/l	2.0	--	1
1,3-Dichloropropane	ND		ug/l	2.0	--	1
1,1,1,2-Tetrachloroethane	ND		ug/l	1.0	--	1
Bromobenzene	ND		ug/l	2.0	--	1
n-Butylbenzene	ND		ug/l	2.0	--	1
sec-Butylbenzene	ND		ug/l	2.0	--	1
tert-Butylbenzene	ND		ug/l	2.0	--	1
o-Chlorotoluene	ND		ug/l	2.0	--	1
p-Chlorotoluene	ND		ug/l	2.0	--	1
1,2-Dibromo-3-chloropropane	ND		ug/l	2.0	--	1
Hexachlorobutadiene	ND		ug/l	0.60	--	1
Isopropylbenzene	ND		ug/l	2.0	--	1
p-Isopropyltoluene	ND		ug/l	2.0	--	1
Naphthalene	ND		ug/l	2.0	--	1
n-Propylbenzene	ND		ug/l	2.0	--	1
1,2,3-Trichlorobenzene	ND		ug/l	2.0	--	1
1,2,4-Trichlorobenzene	ND		ug/l	2.0	--	1
1,3,5-Trimethylbenzene	ND		ug/l	2.0	--	1
1,2,4-Trimethylbenzene	ND		ug/l	2.0	--	1

Project Name: NBHS **Lab Number:** L1525997

Project Number: 115058 **Report Date:** 10/29/15

SAMPLE RESULTS

Lab ID: L1525997-02 Date Collected: 10/13/15 08:15

Client ID: EFFLUENT Date Received: 10/14/15

Sample Location: NEW BEDFORD Field Prep: Not Specified

Parameter	Result	Qualifier	Units	RL	MDL	Dilution Factor
MCP Volatile Organics - Westborough Lab						
Ethyl ether	ND		ug/l	2.0	--	1
Isopropyl Ether	ND		ug/l	2.0	--	1
Ethyl-Tert-Butyl-Ether	ND		ug/l	2.0	--	1
Tertiary-Amyl Methyl Ether	ND		ug/l	2.0	--	1
1,4-Dioxane	ND		ug/l	250	--	1

Surrogate	% Recovery	Qualifier	Acceptance Criteria
1,2-Dichloroethane-d4	99		70-130
Toluene-d8	101		70-130
4-Bromofluorobenzene	102		70-130
Dibromofluoromethane	102		70-130

Project Name: NBHS
Project Number: 115058
Lab Number: L1525997
Report Date: 10/29/15

SAMPLE RESULTS

Lab ID: L1525997-03
Client ID: TRIP BLANK
Sample Location: NEW BEDFORD
Matrix: Water
Analytical Method: 97,8260C
Analytical Date: 10/27/15 07:22
Analyst: MM

Date Collected: 10/08/15 00:00
Date Received: 10/14/15
Field Prep: Not Specified

Parameter	Result	Qualifier	Units	RL	MDL	Dilution Factor
MCP Volatile Organics - Westborough Lab						
Methylene chloride	ND		ug/l	2.0	--	1
1,1-Dichloroethane	ND		ug/l	1.0	--	1
Chloroform	ND		ug/l	1.0	--	1
Carbon tetrachloride	ND		ug/l	1.0	--	1
1,2-Dichloropropane	ND		ug/l	1.0	--	1
Dibromochloromethane	ND		ug/l	1.0	--	1
1,1,2-Trichloroethane	ND		ug/l	1.0	--	1
Tetrachloroethene	ND		ug/l	1.0	--	1
Chlorobenzene	ND		ug/l	1.0	--	1
Trichlorofluoromethane	ND		ug/l	2.0	--	1
1,2-Dichloroethane	ND		ug/l	1.0	--	1
1,1,1-Trichloroethane	ND		ug/l	1.0	--	1
Bromodichloromethane	ND		ug/l	1.0	--	1
trans-1,3-Dichloropropene	ND		ug/l	0.50	--	1
cis-1,3-Dichloropropene	ND		ug/l	0.50	--	1
1,3-Dichloropropene, Total	ND		ug/l	0.50	--	1
1,1-Dichloropropene	ND		ug/l	2.0	--	1
Bromoform	ND		ug/l	2.0	--	1
1,1,2,2-Tetrachloroethane	ND		ug/l	1.0	--	1
Benzene	ND		ug/l	0.50	--	1
Toluene	ND		ug/l	1.0	--	1
Ethylbenzene	ND		ug/l	1.0	--	1
Chloromethane	ND		ug/l	2.0	--	1
Bromomethane	ND		ug/l	2.0	--	1
Vinyl chloride	ND		ug/l	1.0	--	1
Chloroethane	ND		ug/l	2.0	--	1
1,1-Dichloroethene	ND		ug/l	1.0	--	1
trans-1,2-Dichloroethene	ND		ug/l	1.0	--	1
Trichloroethene	ND		ug/l	1.0	--	1
1,2-Dichlorobenzene	ND		ug/l	1.0	--	1

Project Name: NBHS **Lab Number:** L1525997

Project Number: 115058 **Report Date:** 10/29/15

SAMPLE RESULTS

Lab ID: L1525997-03 Date Collected: 10/08/15 00:00

Client ID: TRIP BLANK Date Received: 10/14/15

Sample Location: NEW BEDFORD Field Prep: Not Specified

Parameter	Result	Qualifier	Units	RL	MDL	Dilution Factor
MCP Volatile Organics - Westborough Lab						
1,3-Dichlorobenzene	ND		ug/l	1.0	--	1
1,4-Dichlorobenzene	ND		ug/l	1.0	--	1
Methyl tert butyl ether	ND		ug/l	2.0	--	1
p/m-Xylene	ND		ug/l	2.0	--	1
o-Xylene	ND		ug/l	1.0	--	1
Xylene (Total)	ND		ug/l	1.0	--	1
cis-1,2-Dichloroethene	ND		ug/l	1.0	--	1
1,2-Dichloroethene (total)	ND		ug/l	1.0	--	1
Dibromomethane	ND		ug/l	2.0	--	1
1,2,3-Trichloropropane	ND		ug/l	2.0	--	1
Styrene	ND		ug/l	1.0	--	1
Dichlorodifluoromethane	ND		ug/l	2.0	--	1
Acetone	ND		ug/l	5.0	--	1
Carbon disulfide	ND		ug/l	2.0	--	1
2-Butanone	ND		ug/l	5.0	--	1
4-Methyl-2-pentanone	ND		ug/l	5.0	--	1
2-Hexanone	ND		ug/l	5.0	--	1
Bromochloromethane	ND		ug/l	2.0	--	1
Tetrahydrofuran	ND		ug/l	2.0	--	1
2,2-Dichloropropane	ND		ug/l	2.0	--	1
1,2-Dibromoethane	ND		ug/l	2.0	--	1
1,3-Dichloropropane	ND		ug/l	2.0	--	1
1,1,1,2-Tetrachloroethane	ND		ug/l	1.0	--	1
Bromobenzene	ND		ug/l	2.0	--	1
n-Butylbenzene	ND		ug/l	2.0	--	1
sec-Butylbenzene	ND		ug/l	2.0	--	1
tert-Butylbenzene	ND		ug/l	2.0	--	1
o-Chlorotoluene	ND		ug/l	2.0	--	1
p-Chlorotoluene	ND		ug/l	2.0	--	1
1,2-Dibromo-3-chloropropane	ND		ug/l	2.0	--	1
Hexachlorobutadiene	ND		ug/l	0.60	--	1
Isopropylbenzene	ND		ug/l	2.0	--	1
p-Isopropyltoluene	ND		ug/l	2.0	--	1
Naphthalene	ND		ug/l	2.0	--	1
n-Propylbenzene	ND		ug/l	2.0	--	1
1,2,3-Trichlorobenzene	ND		ug/l	2.0	--	1
1,2,4-Trichlorobenzene	ND		ug/l	2.0	--	1
1,3,5-Trimethylbenzene	ND		ug/l	2.0	--	1
1,2,4-Trimethylbenzene	ND		ug/l	2.0	--	1

Project Name: NBHS **Lab Number:** L1525997

Project Number: 115058 **Report Date:** 10/29/15

SAMPLE RESULTS

Lab ID: L1525997-03 Date Collected: 10/08/15 00:00

Client ID: TRIP BLANK Date Received: 10/14/15

Sample Location: NEW BEDFORD Field Prep: Not Specified

Parameter	Result	Qualifier	Units	RL	MDL	Dilution Factor
MCP Volatile Organics - Westborough Lab						
Ethyl ether	ND		ug/l	2.0	--	1
Isopropyl Ether	ND		ug/l	2.0	--	1
Ethyl-Tert-Butyl-Ether	ND		ug/l	2.0	--	1
Tertiary-Amyl Methyl Ether	ND		ug/l	2.0	--	1
1,4-Dioxane	ND		ug/l	250	--	1

Surrogate	% Recovery	Qualifier	Acceptance Criteria
1,2-Dichloroethane-d4	94		70-130
Toluene-d8	103		70-130
4-Bromofluorobenzene	**132**	Q	70-130
Dibromofluoromethane	100		70-130

Project Name: NBHS **Lab Number:** L1525997

Project Number: 115058 **Report Date:** 10/29/15

Method Blank Analysis
Batch Quality Control

Analytical Method: 97,8260C
Analytical Date: 10/26/15 05:44
Analyst: MM

Parameter	Result	Qualifier	Units	RL	MDL
MCP Volatile Organics - Westborough Lab for sample(s): 01-02 Batch: WG834112-3					
Methylene chloride	ND		ug/l	2.0	--
1,1-Dichloroethane	ND		ug/l	1.0	--
Chloroform	ND		ug/l	1.0	--
Carbon tetrachloride	ND		ug/l	1.0	--
1,2-Dichloropropane	ND		ug/l	1.0	--
Dibromochloromethane	ND		ug/l	1.0	--
1,1,2-Trichloroethane	ND		ug/l	1.0	--
Tetrachloroethene	ND		ug/l	1.0	--
Chlorobenzene	ND		ug/l	1.0	--
Trichlorofluoromethane	ND		ug/l	2.0	--
1,2-Dichloroethane	ND		ug/l	1.0	--
1,1,1-Trichloroethane	ND		ug/l	1.0	--
Bromodichloromethane	ND		ug/l	1.0	--
trans-1,3-Dichloropropene	ND		ug/l	0.50	--
cis-1,3-Dichloropropene	ND		ug/l	0.50	--
1,3-Dichloropropene, Total	ND		ug/l	0.50	--
1,1-Dichloropropene	ND		ug/l	2.0	--
Bromoform	ND		ug/l	2.0	--
1,1,2,2-Tetrachloroethane	ND		ug/l	1.0	--
Benzene	ND		ug/l	0.50	--
Toluene	ND		ug/l	1.0	--
Ethylbenzene	ND		ug/l	1.0	--
Chloromethane	ND		ug/l	2.0	--
Bromomethane	ND		ug/l	2.0	--
Vinyl chloride	ND		ug/l	1.0	--
Chloroethane	ND		ug/l	2.0	--
1,1-Dichloroethene	ND		ug/l	1.0	--
trans-1,2-Dichloroethene	ND		ug/l	1.0	--
Trichloroethene	ND		ug/l	1.0	--

Project Name: NBHS **Lab Number:** L1525997

Project Number: 115058 **Report Date:** 10/29/15

Method Blank Analysis
Batch Quality Control

Analytical Method: 97,8260C
Analytical Date: 10/26/15 05:44
Analyst: MM

Parameter	Result	Qualifier	Units	RL	MDL
MCP Volatile Organics - Westborough Lab for sample(s): 01-02 Batch: WG834112-3					
1,2-Dichlorobenzene	ND		ug/l	1.0	--
1,3-Dichlorobenzene	ND		ug/l	1.0	--
1,4-Dichlorobenzene	ND		ug/l	1.0	--
Methyl tert butyl ether	ND		ug/l	2.0	--
p/m-Xylene	ND		ug/l	2.0	--
o-Xylene	ND		ug/l	1.0	--
Xylene (Total)	ND		ug/l	1.0	--
cis-1,2-Dichloroethene	ND		ug/l	1.0	--
1,2-Dichloroethene (total)	ND		ug/l	1.0	--
Dibromomethane	ND		ug/l	2.0	--
1,2,3-Trichloropropane	ND		ug/l	2.0	--
Styrene	ND		ug/l	1.0	--
Dichlorodifluoromethane	ND		ug/l	2.0	--
Acetone	ND		ug/l	5.0	--
Carbon disulfide	ND		ug/l	2.0	--
2-Butanone	ND		ug/l	5.0	--
4-Methyl-2-pentanone	ND		ug/l	5.0	--
2-Hexanone	ND		ug/l	5.0	--
Bromochloromethane	ND		ug/l	2.0	--
Tetrahydrofuran	ND		ug/l	2.0	--
2,2-Dichloropropane	ND		ug/l	2.0	--
1,2-Dibromoethane	ND		ug/l	2.0	--
1,3-Dichloropropane	ND		ug/l	2.0	--
1,1,1,2-Tetrachloroethane	ND		ug/l	1.0	--
Bromobenzene	ND		ug/l	2.0	--
n-Butylbenzene	ND		ug/l	2.0	--
sec-Butylbenzene	ND		ug/l	2.0	--
tert-Butylbenzene	ND		ug/l	2.0	--
o-Chlorotoluene	ND		ug/l	2.0	--

Project Name: NBHS **Lab Number:** L1525997

Project Number: 115058 **Report Date:** 10/29/15

Method Blank Analysis
Batch Quality Control

Analytical Method: 97,8260C
Analytical Date: 10/26/15 05:44
Analyst: MM

Parameter	Result	Qualifier	Units	RL	MDL
MCP Volatile Organics - Westborough Lab for sample(s): 01-02 Batch: WG834112-3					
p-Chlorotoluene	ND		ug/l	2.0	--
1,2-Dibromo-3-chloropropane	ND		ug/l	2.0	--
Hexachlorobutadiene	ND		ug/l	0.60	--
Isopropylbenzene	ND		ug/l	2.0	--
p-Isopropyltoluene	ND		ug/l	2.0	--
Naphthalene	ND		ug/l	2.0	--
n-Propylbenzene	ND		ug/l	2.0	--
1,2,3-Trichlorobenzene	ND		ug/l	2.0	--
1,2,4-Trichlorobenzene	ND		ug/l	2.0	--
1,3,5-Trimethylbenzene	ND		ug/l	2.0	--
1,2,4-Trimethylbenzene	ND		ug/l	2.0	--
Ethyl ether	ND		ug/l	2.0	--
Isopropyl Ether	ND		ug/l	2.0	--
Ethyl-Tert-Butyl-Ether	ND		ug/l	2.0	--
Tertiary-Amyl Methyl Ether	ND		ug/l	2.0	--
1,4-Dioxane	ND		ug/l	250	--

Surrogate	%Recovery	Qualifier	Acceptance Criteria
1,2-Dichloroethane-d4	95		70-130
Toluene-d8	101		70-130
4-Bromofluorobenzene	102		70-130
Dibromofluoromethane	98		70-130

Project Name: NBHS **Lab Number:** L1525997

Project Number: 115058 **Report Date:** 10/29/15

Method Blank Analysis
Batch Quality Control

Analytical Method: 97,8260C
Analytical Date: 10/27/15 06:50
Analyst: MM

Parameter	Result	Qualifier	Units	RL	MDL
MCP Volatile Organics - Westborough Lab for sample(s): 03 Batch: WG834503-3					
Methylene chloride	ND		ug/l	2.0	--
1,1-Dichloroethane	ND		ug/l	1.0	--
Chloroform	ND		ug/l	1.0	--
Carbon tetrachloride	ND		ug/l	1.0	--
1,2-Dichloropropane	ND		ug/l	1.0	--
Dibromochloromethane	ND		ug/l	1.0	--
1,1,2-Trichloroethane	ND		ug/l	1.0	--
Tetrachloroethene	ND		ug/l	1.0	--
Chlorobenzene	ND		ug/l	1.0	--
Trichlorofluoromethane	ND		ug/l	2.0	--
1,2-Dichloroethane	ND		ug/l	1.0	--
1,1,1-Trichloroethane	ND		ug/l	1.0	--
Bromodichloromethane	ND		ug/l	1.0	--
trans-1,3-Dichloropropene	ND		ug/l	0.50	--
cis-1,3-Dichloropropene	ND		ug/l	0.50	--
1,3-Dichloropropene, Total	ND		ug/l	0.50	--
1,1-Dichloropropene	ND		ug/l	2.0	--
Bromoform	ND		ug/l	2.0	--
1,1,2,2-Tetrachloroethane	ND		ug/l	1.0	--
Benzene	ND		ug/l	0.50	--
Toluene	ND		ug/l	1.0	--
Ethylbenzene	ND		ug/l	1.0	--
Chloromethane	ND		ug/l	2.0	--
Bromomethane	ND		ug/l	2.0	--
Vinyl chloride	ND		ug/l	1.0	--
Chloroethane	ND		ug/l	2.0	--
1,1-Dichloroethene	ND		ug/l	1.0	--
trans-1,2-Dichloroethene	ND		ug/l	1.0	--
Trichloroethene	ND		ug/l	1.0	--

Project Name: NBHS **Lab Number:** L1525997

Project Number: 115058 **Report Date:** 10/29/15

Method Blank Analysis
Batch Quality Control

Analytical Method: 97,8260C
Analytical Date: 10/27/15 06:50
Analyst: MM

Parameter	Result	Qualifier	Units	RL	MDL
MCP Volatile Organics - Westborough Lab for sample(s): 03 Batch: WG834503-3					
1,2-Dichlorobenzene	ND		ug/l	1.0	--
1,3-Dichlorobenzene	ND		ug/l	1.0	--
1,4-Dichlorobenzene	ND		ug/l	1.0	--
Methyl tert butyl ether	ND		ug/l	2.0	--
p/m-Xylene	ND		ug/l	2.0	--
o-Xylene	ND		ug/l	1.0	--
Xylene (Total)	ND		ug/l	1.0	--
cis-1,2-Dichloroethene	ND		ug/l	1.0	--
1,2-Dichloroethene (total)	ND		ug/l	1.0	--
Dibromomethane	ND		ug/l	2.0	--
1,2,3-Trichloropropane	ND		ug/l	2.0	--
Styrene	ND		ug/l	1.0	--
Dichlorodifluoromethane	ND		ug/l	2.0	--
Acetone	ND		ug/l	5.0	--
Carbon disulfide	ND		ug/l	2.0	--
2-Butanone	ND		ug/l	5.0	--
4-Methyl-2-pentanone	ND		ug/l	5.0	--
2-Hexanone	ND		ug/l	5.0	--
Bromochloromethane	ND		ug/l	2.0	--
Tetrahydrofuran	ND		ug/l	2.0	--
2,2-Dichloropropane	ND		ug/l	2.0	--
1,2-Dibromoethane	ND		ug/l	2.0	--
1,3-Dichloropropane	ND		ug/l	2.0	--
1,1,1,2-Tetrachloroethane	ND		ug/l	1.0	--
Bromobenzene	ND		ug/l	2.0	--
n-Butylbenzene	ND		ug/l	2.0	--
sec-Butylbenzene	ND		ug/l	2.0	--
tert-Butylbenzene	ND		ug/l	2.0	--
o-Chlorotoluene	ND		ug/l	2.0	--

Project Name: NBHS **Lab Number:** L1525997

Project Number: 115058 **Report Date:** 10/29/15

Method Blank Analysis
Batch Quality Control

Analytical Method: 97,8260C
Analytical Date: 10/27/15 06:50
Analyst: MM

Parameter	Result	Qualifier	Units	RL	MDL
MCP Volatile Organics - Westborough Lab for sample(s): 03 Batch: WG834503-3					
p-Chlorotoluene	ND		ug/l	2.0	--
1,2-Dibromo-3-chloropropane	ND		ug/l	2.0	--
Hexachlorobutadiene	ND		ug/l	0.60	--
Isopropylbenzene	ND		ug/l	2.0	--
p-Isopropyltoluene	ND		ug/l	2.0	--
Naphthalene	ND		ug/l	2.0	--
n-Propylbenzene	ND		ug/l	2.0	--
1,2,3-Trichlorobenzene	ND		ug/l	2.0	--
1,2,4-Trichlorobenzene	ND		ug/l	2.0	--
1,3,5-Trimethylbenzene	ND		ug/l	2.0	--
1,2,4-Trimethylbenzene	ND		ug/l	2.0	--
Ethyl ether	ND		ug/l	2.0	--
Isopropyl Ether	ND		ug/l	2.0	--
Ethyl-Tert-Butyl-Ether	ND		ug/l	2.0	--
Tertiary-Amyl Methyl Ether	ND		ug/l	2.0	--
1,4-Dioxane	ND		ug/l	250	--
tert-Butyl Alcohol	ND		ug/l	10	--

Surrogate	%Recovery	Qualifier	Acceptance Criteria
1,2-Dichloroethane-d4	90		70-130
Toluene-d8	97		70-130
4-Bromofluorobenzene	97		70-130
Dibromofluoromethane	105		70-130

Lab Control Sample Analysis
Batch Quality Control

Project Name: NBHS
Project Number: 115058

Lab Number: L1525997
Report Date: 10/29/15

Parameter	LCS %Recovery	Qual	LCSD %Recovery	Qual	%Recovery Limits	RPD	Qual	RPD Limits
MCP Volatile Organics - Westborough Lab Associated sample(s): 01-02 Batch: WG834112-1 WG834112-2								
Methylene chloride	98		99		70-130	1		20
1,1-Dichloroethane	107		108		70-130	1		20
Chloroform	92		92		70-130	0		20
Carbon tetrachloride	81		83		70-130	2		20
1,2-Dichloropropane	100		100		70-130	0		20
Dibromochloromethane	78		79		70-130	1		20
1,1,2-Trichloroethane	97		98		70-130	1		20
Tetrachloroethene	94		94		70-130	0		20
Chlorobenzene	96		97		70-130	1		20
Trichlorofluoromethane	91		92		70-130	1		20
1,2-Dichloroethane	89		90		70-130	1		20
1,1,1-Trichloroethane	87		89		70-130	2		20
Bromodichloromethane	89		92		70-130	3		20
trans-1,3-Dichloropropene	86		88		70-130	2		20
cis-1,3-Dichloropropene	88		90		70-130	2		20
1,1-Dichloropropene	94		95		70-130	1		20
Bromoform	79		82		70-130	4		20
1,1,2,2-Tetrachloroethane	96		97		70-130	1		20
Benzene	99		100		70-130	1		20
Toluene	99		100		70-130	1		20
Ethylbenzene	99		100		70-130	1		20

Lab Control Sample Analysis
Batch Quality Control

Project Name: NBHS
Project Number: 115058

Lab Number: L1525997
Report Date: 10/29/15

Parameter	LCS %Recovery	Qual	LCSD %Recovery	Qual	%Recovery Limits	RPD	Qual	RPD Limits
MCP Volatile Organics - Westborough Lab Associated sample(s): 01-02 Batch: WG834112-1 WG834112-2								
Chloromethane	109		110		70-130	1		20
Bromomethane	98		98		70-130	0		20
Vinyl chloride	98		99		70-130	1		20
Chloroethane	112		113		70-130	1		20
1,1-Dichloroethene	91		92		70-130	1		20
trans-1,2-Dichloroethene	96		97		70-130	1		20
Trichloroethene	93		94		70-130	1		20
1,2-Dichlorobenzene	97		98		70-130	1		20
1,3-Dichlorobenzene	99		100		70-130	1		20
1,4-Dichlorobenzene	97		98		70-130	1		20
Methyl tert butyl ether	108		109		70-130	1		20
p/m-Xylene	101		102		70-130	1		20
o-Xylene	103		103		70-130	0		20
cis-1,2-Dichloroethene	98		100		70-130	2		20
Dibromomethane	95		96		70-130	1		20
1,2,3-Trichloropropane	93		94		70-130	1		20
Styrene	103		104		70-130	1		20
Dichlorodifluoromethane	106		106		70-130	0		20
Acetone	83		79		70-130	5		20
Carbon disulfide	93		96		70-130	3		20
2-Butanone	97		98		70-130	1		20

Lab Control Sample Analysis
Batch Quality Control

Project Name: NBHS
Project Number: 115058

Lab Number: L1525997
Report Date: 10/29/15

Parameter	LCS %Recovery	Qual	LCSD %Recovery	Qual	%Recovery Limits	RPD	Qual	RPD Limits
MCP Volatile Organics - Westborough Lab Associated sample(s): 01-02 Batch: WG834112-1 WG834112-2								
4-Methyl-2-pentanone	84		87		70-130	4		20
2-Hexanone	89		91		70-130	2		20
Bromochloromethane	97		98		70-130	1		20
Tetrahydrofuran	94		95		70-130	1		20
2,2-Dichloropropane	86		88		70-130	2		20
1,2-Dibromoethane	100		101		70-130	1		20
1,3-Dichloropropane	100		101		70-130	1		20
1,1,1,2-Tetrachloroethane	89		92		70-130	3		20
Bromobenzene	98		99		70-130	1		20
n-Butylbenzene	102		102		70-130	0		20
sec-Butylbenzene	106		106		70-130	0		20
tert-Butylbenzene	102		103		70-130	1		20
o-Chlorotoluene	101		102		70-130	1		20
p-Chlorotoluene	101		102		70-130	1		20
1,2-Dibromo-3-chloropropane	**67**	Q	70		70-130	4		20
Hexachlorobutadiene	95		96		70-130	1		20
Isopropylbenzene	99		99		70-130	0		20
p-Isopropyltoluene	97		97		70-130	0		20
Naphthalene	75		76		70-130	1		20
n-Propylbenzene	107		107		70-130	0		20
1,2,3-Trichlorobenzene	77		79		70-130	3		20

Lab Control Sample Analysis
Batch Quality Control

Project Name: NBHS
Project Number: 115058

Lab Number: L1525997
Report Date: 10/29/15

Parameter	LCS %Recovery	Qual	LCSD %Recovery	Qual	%Recovery Limits	RPD	Qual	RPD Limits
MCP Volatile Organics - Westborough Lab Associated sample(s): 01-02 Batch: WG834112-1 WG834112-2								
1,2,4-Trichlorobenzene	84		84		70-130	0		20
1,3,5-Trimethylbenzene	104		103		70-130	1		20
1,2,4-Trimethylbenzene	102		102		70-130	0		20
Ethyl ether	100		103		70-130	3		20
Isopropyl Ether	104		106		70-130	2		20
Ethyl-Tert-Butyl-Ether	109		112		70-130	3		20
Tertiary-Amyl Methyl Ether	98		99		70-130	1		20
1,4-Dioxane	119		119		70-130	0		20

Surrogate	LCS %Recovery	Qual	LCSD %Recovery	Qual	Acceptance Criteria
1,2-Dichloroethane-d4	92		90		70-130
Toluene-d8	103		103		70-130
4-Bromofluorobenzene	101		101		70-130
Dibromofluoromethane	97		99		70-130

Lab Control Sample Analysis
Batch Quality Control

Project Name: NBHS
Project Number: 115058

Lab Number: L1525997
Report Date: 10/29/15

Parameter	LCS %Recovery	Qual	LCSD %Recovery	Qual	%Recovery Limits	RPD	Qual	RPD Limits
MCP Volatile Organics - Westborough Lab Associated sample(s): 03 Batch: WG834503-1 WG834503-2								
Methylene chloride	92		90		70-130	2		20
1,1-Dichloroethane	101		100		70-130	1		20
Chloroform	100		99		70-130	1		20
Carbon tetrachloride	97		96		70-130	1		20
1,2-Dichloropropane	98		100		70-130	2		20
Dibromochloromethane	96		94		70-130	2		20
1,1,2-Trichloroethane	99		100		70-130	1		20
Tetrachloroethene	103		102		70-130	1		20
Chlorobenzene	104		101		70-130	3		20
Trichlorofluoromethane	99		99		70-130	0		20
1,2-Dichloroethane	93		94		70-130	1		20
1,1,1-Trichloroethane	97		96		70-130	1		20
Bromodichloromethane	92		96		70-130	4		20
trans-1,3-Dichloropropene	96		92		70-130	4		20
cis-1,3-Dichloropropene	97		99		70-130	2		20
1,1-Dichloropropene	99		99		70-130	0		20
Bromoform	93		95		70-130	2		20
1,1,2,2-Tetrachloroethane	100		104		70-130	4		20
Benzene	100		100		70-130	0		20
Toluene	102		101		70-130	1		20
Ethylbenzene	102		102		70-130	0		20

Lab Control Sample Analysis
Batch Quality Control

Project Name: NBHS
Project Number: 115058

Lab Number: L1525997
Report Date: 10/29/15

Parameter	LCS %Recovery	Qual	LCSD %Recovery	Qual	%Recovery Limits	RPD	Qual	RPD Limits
MCP Volatile Organics - Westborough Lab Associated sample(s): 03 Batch: WG834503-1 WG834503-2								
Chloromethane	95		97		70-130	2		20
Bromomethane	90		82		70-130	9		20
Vinyl chloride	101		98		70-130	3		20
Chloroethane	117		106		70-130	10		20
1,1-Dichloroethene	105		105		70-130	0		20
trans-1,2-Dichloroethene	94		75		70-130	**22**	Q	20
Trichloroethene	99		97		70-130	2		20
1,2-Dichlorobenzene	97		98		70-130	1		20
1,3-Dichlorobenzene	99		100		70-130	1		20
1,4-Dichlorobenzene	98		99		70-130	1		20
Methyl tert butyl ether	**69**	Q	72		70-130	4		20
p/m-Xylene	103		105		70-130	2		20
o-Xylene	107		106		70-130	1		20
cis-1,2-Dichloroethene	102		97		70-130	5		20
Dibromomethane	103		99		70-130	4		20
1,2,3-Trichloropropane	97		96		70-130	1		20
Styrene	106		104		70-130	2		20
Dichlorodifluoromethane	95		92		70-130	3		20
Acetone	98		79		70-130	**21**	Q	20
Carbon disulfide	104		103		70-130	1		20
2-Butanone	86		94		70-130	9		20

Lab Control Sample Analysis
Batch Quality Control

Project Name: NBHS
Project Number: 115058

Lab Number: L1525997
Report Date: 10/29/15

Parameter	LCS %Recovery	Qual	LCSD %Recovery	Qual	%Recovery Limits	RPD	Qual	RPD Limits
MCP Volatile Organics - Westborough Lab Associated sample(s): 03 Batch: WG834503-1 WG834503-2								
4-Methyl-2-pentanone	99		94		70-130	5		20
2-Hexanone	90		87		70-130	3		20
Bromochloromethane	111		109		70-130	2		20
Tetrahydrofuran	91		88		70-130	3		20
2,2-Dichloropropane	101		99		70-130	2		20
1,2-Dibromoethane	102		102		70-130	0		20
1,3-Dichloropropane	98		98		70-130	0		20
1,1,1,2-Tetrachloroethane	98		99		70-130	1		20
Bromobenzene	98		100		70-130	2		20
n-Butylbenzene	102		104		70-130	2		20
sec-Butylbenzene	100		101		70-130	1		20
tert-Butylbenzene	96		99		70-130	3		20
o-Chlorotoluene	98		99		70-130	1		20
p-Chlorotoluene	99		102		70-130	3		20
1,2-Dibromo-3-chloropropane	83		94		70-130	12		20
Hexachlorobutadiene	104		104		70-130	0		20
Isopropylbenzene	100		101		70-130	1		20
p-Isopropyltoluene	97		97		70-130	0		20
Naphthalene	**69**	Q	**67**	Q	70-130	3		20
n-Propylbenzene	98		99		70-130	1		20
1,2,3-Trichlorobenzene	84		80		70-130	5		20

Lab Control Sample Analysis
Batch Quality Control

Project Name: NBHS
Project Number: 115058

Lab Number: L1525997
Report Date: 10/29/15

Parameter	LCS %Recovery	Qual	LCSD %Recovery	Qual	%Recovery Limits	RPD	Qual	RPD Limits
MCP Volatile Organics - Westborough Lab Associated sample(s): 03 Batch: WG834503-1 WG834503-2								
1,2,4-Trichlorobenzene	78		76		70-130	3		20
1,3,5-Trimethylbenzene	97		98		70-130	1		20
1,2,4-Trimethylbenzene	98		98		70-130	0		20
Ethyl ether	101		97		70-130	4		20
Isopropyl Ether	94		92		70-130	2		20
Ethyl-Tert-Butyl-Ether	90		88		70-130	2		20
Tertiary-Amyl Methyl Ether	94		91		70-130	3		20
1,4-Dioxane	98		101		70-130	3		20
tert-Butyl Alcohol	101		103		70-130	2		20

Surrogate	LCS %Recovery	Qual	LCSD %Recovery	Qual	Acceptance Criteria
1,2-Dichloroethane-d4	95		87		70-130
Toluene-d8	103		102		70-130
4-Bromofluorobenzene	94		96		70-130
Dibromofluoromethane	99		102		70-130

PCBS

Project Name: NBHS
Project Number: 115058

Lab Number: L1525997
Report Date: 10/29/15

SAMPLE RESULTS

Lab ID:	L1525997-01	D	Date Collected:	10/13/15 09:45
Client ID:	INFLUENT		Date Received:	10/14/15
Sample Location:	NEW BEDFORD		Field Prep:	Not Specified
Matrix:	Water		Extraction Method:	EPA 3510C
Analytical Method:	97,8082A		Extraction Date:	10/28/15 14:42
Analytical Date:	10/28/15 20:30		Cleanup Method:	EPA 3665A
Analyst:	JT		Cleanup Date:	10/28/15
			Cleanup Method:	EPA 3660B
			Cleanup Date:	10/28/15

Parameter	Result	Qualifier	Units	RL	MDL	Dilution Factor	Column
MCP Polychlorinated Biphenyls - Westborough Lab							
Aroclor 1016	ND		ug/l	2.50	--	10	A
Aroclor 1221	ND		ug/l	2.50	--	10	A
Aroclor 1232	ND		ug/l	2.50	--	10	A
Aroclor 1242	ND		ug/l	2.50	--	10	A
Aroclor 1248	ND		ug/l	2.50	--	10	A
Aroclor 1254	8.98		ug/l	2.50	--	10	B
Aroclor 1260	ND		ug/l	2.50	--	10	A
Aroclor 1262	ND		ug/l	2.50	--	10	A
Aroclor 1268	ND		ug/l	2.50	--	10	A
PCBs, Total	8.98		ug/l	2.50	--	10	A

Surrogate	% Recovery	Qualifier	Acceptance Criteria	Column
2,4,5,6-Tetrachloro-m-xylene	**0**	Q	30-150	A
Decachlorobiphenyl	**0**	Q	30-150	A
2,4,5,6-Tetrachloro-m-xylene	**0**	Q	30-150	B
Decachlorobiphenyl	**0**	Q	30-150	B

Project Name: NBHS
Project Number: 115058

Lab Number: L1525997
Report Date: 10/29/15

SAMPLE RESULTS

Lab ID:	L1525997-02
Client ID:	EFFLUENT
Sample Location:	NEW BEDFORD
Matrix:	Water
Analytical Method:	97,8082A
Analytical Date:	10/28/15 19:06
Analyst:	JT

Date Collected:	10/13/15 08:15
Date Received:	10/14/15
Field Prep:	Not Specified
Extraction Method:	EPA 3510C
Extraction Date:	10/28/15 14:42
Cleanup Method:	EPA 3665A
Cleanup Date:	10/28/15
Cleanup Method:	EPA 3660B
Cleanup Date:	10/28/15

Parameter	Result	Qualifier	Units	RL	MDL	Dilution Factor	Column
MCP Polychlorinated Biphenyls - Westborough Lab							
Aroclor 1016	ND		ug/l	0.250	--	1	A
Aroclor 1221	ND		ug/l	0.250	--	1	A
Aroclor 1232	ND		ug/l	0.250	--	1	A
Aroclor 1242	ND		ug/l	0.250	--	1	A
Aroclor 1248	ND		ug/l	0.250	--	1	A
Aroclor 1254	ND		ug/l	0.250	--	1	A
Aroclor 1260	ND		ug/l	0.250	--	1	A
Aroclor 1262	ND		ug/l	0.250	--	1	A
Aroclor 1268	ND		ug/l	0.250	--	1	A
PCBs, Total	ND		ug/l	0.250	--	1	A

Surrogate	% Recovery	Qualifier	Acceptance Criteria	Column
2,4,5,6-Tetrachloro-m-xylene	82		30-150	A
Decachlorobiphenyl	81		30-150	A
2,4,5,6-Tetrachloro-m-xylene	80		30-150	B
Decachlorobiphenyl	68		30-150	B

Project Name: NBHS

Project Number: 115058

Lab Number: L1525997

Report Date: 10/29/15

Method Blank Analysis
Batch Quality Control

Analytical Method: 97,8082A
Analytical Date: 10/28/15 18:13
Analyst: JT

Extraction Method: EPA 3510C
Extraction Date: 10/28/15 14:42
Cleanup Method: EPA 3665A
Cleanup Date: 10/28/15
Cleanup Method: EPA 3660B
Cleanup Date: 10/28/15

Parameter	Result	Qualifier	Units	RL	MDL	Column
MCP Polychlorinated Biphenyls - Westborough Lab for sample(s): 01-02 Batch: WG835065-1						
Aroclor 1016	ND		ug/l	0.250	--	A
Aroclor 1221	ND		ug/l	0.250	--	A
Aroclor 1232	ND		ug/l	0.250	--	A
Aroclor 1242	ND		ug/l	0.250	--	A
Aroclor 1248	ND		ug/l	0.250	--	A
Aroclor 1254	ND		ug/l	0.250	--	A
Aroclor 1260	ND		ug/l	0.250	--	A
Aroclor 1262	ND		ug/l	0.250	--	A
Aroclor 1268	ND		ug/l	0.250	--	A
PCBs, Total	ND		ug/l	0.250	--	A

Surrogate	%Recovery	Qualifier	Acceptance Criteria	Column
2,4,5,6-Tetrachloro-m-xylene	81		30-150	A
Decachlorobiphenyl	87		30-150	A
2,4,5,6-Tetrachloro-m-xylene	79		30-150	B
Decachlorobiphenyl	74		30-150	B

Lab Control Sample Analysis
Batch Quality Control

Project Name: NBHS
Project Number: 115058

Lab Number: L1525997
Report Date: 10/29/15

Parameter	LCS %Recovery	Qual	LCSD %Recovery	Qual	%Recovery Limits	RPD	Qual	RPD Limits	Column
MCP Polychlorinated Biphenyls - Westborough Lab Associated sample(s): 01-02 Batch: WG835065-2 WG835065-3									
Aroclor 1016	90		81		40-140	10		20	A
Aroclor 1260	82		79		40-140	4		20	A

Surrogate	LCS %Recovery	Qual	LCSD %Recovery	Qual	Acceptance Criteria	Column
2,4,5,6-Tetrachloro-m-xylene	86		81		30-150	A
Decachlorobiphenyl	91		84		30-150	A
2,4,5,6-Tetrachloro-m-xylene	84		79		30-150	B
Decachlorobiphenyl	77		70		30-150	B

Project Name: NBHS
Project Number: 115058

Lab Number: L1525997
Report Date: 10/29/15

Sample Receipt and Container Information

Were project specific reporting limits specified? YES

Cooler Information Custody Seal

Cooler	
A	Absent

Container Information

Container ID	Container Type	Cooler	pH	Temp deg C	Pres	Seal	Analysis(*)
L1525997-01A	Vial HCl preserved	A	N/A	4.8	Y	Absent	MCP-8260-10(14)
L1525997-01B	Vial HCl preserved	A	N/A	4.8	Y	Absent	MCP-8260-10(14)
L1525997-01C	Vial HCl preserved	A	N/A	4.8	Y	Absent	MCP-8260-10(14)
L1525997-01D	Amber 1000ml unpreserved	A	7	4.8	Y	Absent	MCP-8082-10(365)
L1525997-01E	Amber 1000ml unpreserved	A	7	4.8	Y	Absent	MCP-8082-10(365)
L1525997-02A	Vial HCl preserved	A	N/A	4.8	Y	Absent	MCP-8260-10(14)
L1525997-02B	Vial HCl preserved	A	N/A	4.8	Y	Absent	MCP-8260-10(14)
L1525997-02C	Vial HCl preserved	A	N/A	4.8	Y	Absent	MCP-8260-10(14)
L1525997-02D	Amber 1000ml unpreserved	A	7	4.8	Y	Absent	MCP-8082-10(365)
L1525997-02E	Amber 1000ml unpreserved	A	7	4.8	Y	Absent	MCP-8082-10(365)
L1525997-03A	Vial HCl preserved	A	N/A	4.8	Y	Absent	MCP-8260-10(14)
L1525997-03B	Vial HCl preserved	A	N/A	4.8	Y	Absent	MCP-8260-10(14)

*Values in parentheses indicate holding time in days

Project Name:	NBHS	**Lab Number:**	L1525997
Project Number:	115058	**Report Date:**	10/29/15

GLOSSARY

Acronyms

EDL	- Estimated Detection Limit: This value represents the level to which target analyte concentrations are reported as estimated values, when those target analyte concentrations are quantified below the reporting limit (RL). The EDL includes any adjustments from dilutions, concentrations or moisture content, where applicable. The use of EDLs is specific to the analysis of PAHs using Solid-Phase Microextraction (SPME).
EPA	- Environmental Protection Agency.
LCS	- Laboratory Control Sample: A sample matrix, free from the analytes of interest, spiked with verified known amounts of analytes or a material containing known and verified amounts of analytes.
LCSD	- Laboratory Control Sample Duplicate: Refer to LCS.
LFB	- Laboratory Fortified Blank: A sample matrix, free from the analytes of interest, spiked with verified known amounts of analytes or a material containing known and verified amounts of analytes.
MDL	- Method Detection Limit: This value represents the level to which target analyte concentrations are reported as estimated values, when those target analyte concentrations are quantified below the reporting limit (RL). The MDL includes any adjustments from dilutions, concentrations or moisture content, where applicable.
MS	- Matrix Spike Sample: A sample prepared by adding a known mass of target analyte to a specified amount of matrix sample for which an independent estimate of target analyte concentration is available.
MSD	- Matrix Spike Sample Duplicate: Refer to MS.
NA	- Not Applicable.
NC	- Not Calculated: Term is utilized when one or more of the results utilized in the calculation are non-detect at the parameter's reporting unit.
NI	- Not Ignitable.
NP	- Non-Plastic: Term is utilized for the analysis of Atterberg Limits in soil.
RL	- Reporting Limit: The value at which an instrument can accurately measure an analyte at a specific concentration. The RL includes any adjustments from dilutions, concentrations or moisture content, where applicable.
RPD	- Relative Percent Difference: The results from matrix and/or matrix spike duplicates are primarily designed to assess the precision of analytical results in a given matrix and are expressed as relative percent difference (RPD). Values which are less than five times the reporting limit for any individual parameter are evaluated by utilizing the absolute difference between the values; although the RPD value will be provided in the report.
SRM	- Standard Reference Material: A reference sample of a known or certified value that is of the same or similar matrix as the associated field samples.
STLP	- Semi-dynamic Tank Leaching Procedure per EPA Method 1315.
TIC	- Tentatively Identified Compound: A compound that has been identified to be present and is not part of the target compound list (TCL) for the method and/or program. All TICs are qualitatively identified and reported as estimated concentrations.

Footnotes

1	- The reference for this analyte should be considered modified since this analyte is absent from the target analyte list of the original method.

Terms

Total: With respect to Organic analyses, a 'Total' result is defined as the summation of results for individual isomers or Aroclors. If a 'Total' result is requested, the results of its individual components will also be reported. This is applicable to 'Total' results for methods 8260, 8081 and 8082.

Analytical Method: Both the document from which the method originates and the analytical reference method. (Example: EPA 8260B is shown as 1,8260B.) The codes for the reference method documents are provided in the References section of the Addendum.

Data Qualifiers

A	- Spectra identified as "Aldol Condensation Product".
B	- The analyte was detected above the reporting limit in the associated method blank. Flag only applies to associated field samples that have detectable concentrations of the analyte at less than ten times (10x) the concentration found in the blank. For MCP-related projects, flag only applies to associated field samples that have detectable concentrations of the analyte at less than ten times (10x) the concentration found in the blank. For DOD-related projects, flag only applies to associated field samples that have detectable concentrations of the analyte at less than ten times (10x) the concentration found in the blank AND the analyte was detected above one-half the reporting limit (or above the reporting limit for common lab contaminants) in the associated method blank. For NJ-Air-related projects, flag only applies to associated field samples that have detectable concentrations of the analyte above the reporting limit. For NJ-related projects (excluding Air), flag only applies to associated field samples that have detectable concentrations of the analyte, which was detected above the reporting limit in the associated method blank or above five times the reporting limit for common lab contaminants (Phthalates, Acetone, Methylene Chloride, 2-Butanone).

Report Format: Data Usability Report

Project Name: NBHS **Lab Number:** L1525997

Project Number: 115058 **Report Date:** 10/29/15

Data Qualifiers

C - Co-elution: The target analyte co-elutes with a known lab standard (i.e. surrogate, internal standards, etc.) for co-extracted analyses.

D - Concentration of analyte was quantified from diluted analysis. Flag only applies to field samples that have detectable concentrations of the analyte.

E - Concentration of analyte exceeds the range of the calibration curve and/or linear range of the instrument.

G - The concentration may be biased high due to matrix interferences (i.e, co-elution) with non-target compound(s). The result should be considered estimated.

H - The analysis of pH was performed beyond the regulatory-required holding time of 15 minutes from the time of sample collection.

I - The lower value for the two columns has been reported due to obvious interference.

M - Reporting Limit (RL) exceeds the MCP CAM Reporting Limit for this analyte.

NJ - Presumptive evidence of compound. This represents an estimated concentration for Tentatively Identified Compounds (TICs), where the identification is based on a mass spectral library search.

P - The RPD between the results for the two columns exceeds the method-specified criteria.

Q - The quality control sample exceeds the associated acceptance criteria. For DOD-related projects, LCS and/or Continuing Calibration Standard exceedences are also qualified on all associated sample results. Note: This flag is not applicable for matrix spike recoveries when the sample concentration is greater than 4x the spike added or for batch duplicate RPD when the sample concentrations are less than 5x the RL. (Metals only.)

R - Analytical results are from sample re-analysis.

RE - Analytical results are from sample re-extraction.

S - Analytical results are from modified screening analysis.

J - Estimated value. This represents an estimated concentration for Tentatively Identified Compounds (TICs).

ND - Not detected at the reporting limit (RL) for the sample.

Report Format: Data Usability Report

Project Name: NBHS **Lab Number:** L1525997
Project Number: 115058 **Report Date:** 10/29/15

REFERENCES

97 EPA Test Methods (SW-846) with QC Requirements & Performance Standards for the Analysis of EPA SW-846 Methods under the Massachusetts Contingency Plan, WSC-CAM-IIA, IIB, IIIA, IIIB, IIIC, IIID, VA, VB, VC, VIA, VIB, VIIIA and VIIIB, July 2010.

LIMITATION OF LIABILITIES

Alpha Analytical performs services with reasonable care and diligence normal to the analytical testing laboratory industry. In the event of an error, the sole and exclusive responsibility of Alpha Analytical shall be to re-perform the work at it's own expense. In no event shall Alpha Analytical be held liable for any incidental, consequential or special damages, including but not limited to, damages in any way connected with the use of, interpretation of, information or analysis provided by Alpha Analytical.

We strongly urge our clients to comply with EPA protocol regarding sample volume, preservation, cooling, containers, sampling procedures, holding time and splitting of samples in the field.

Certification Information

The following analytes are not included in our Primary NELAP Scope of Accreditation:

Westborough Facility
EPA 8260C: 1,2,4,5-Tetramethylbenzene, 4-Ethyltoluene, Iodomethane (methyl iodide) (soil), Methyl methacrylate (soil), Azobenzene.
EPA 8270D: Dimethylnaphthalene,1,4-Diphenylhydrazine.
EPA 625: 4-Chloroaniline, 4-Methylphenol.
SM4500: Soil: Total Phosphorus, TKN, NO2, NO3.

Mansfield Facility
EPA 8270D: Biphenyl.
EPA 2540D: TSS
EPA TO-15: Halothane, 2,4,4-Trimethyl-2-pentene, 2,4,4-Trimethyl-1-pentene, Thiophene, 2-Methylthiophene, 3-Methylthiophene, 2-Ethylthiophene, 1,2,3-Trimethylbenzene, Indan, Indene, 1,2,4,5-Tetramethylbenzene, Benzothiophene, 1-Methylnaphthalene.

The following analytes are included in our Massachusetts DEP Scope of Accreditation, Westborough Facility:

Drinking Water
EPA 200.8: Sb,As,Ba,Be,Cd,Cr,Cu,Pb,Ni,Se,Tl; **EPA 200.7**: Ba,Be,Ca,Cd,Cr,Cu,Na; **EPA 245.1:** Mercury;
EPA 300.0: Nitrate-N, Fluoride, Sulfate; **EPA 353.2**: Nitrate-N, Nitrite-N; **SM4500NO3-F**: Nitrate-N, Nitrite-N; **SM4500F-C, SM4500CN-CE, EPA 180.1, SM2130B, SM4500Cl-D, SM2320B, SM2540C, SM4500H-B**
EPA 332: Perchlorate.
Microbiology: **SM9215B; SM9223-P/A, SM9223B-Colilert-QT, Enterolert-QT.**

Non-Potable Water
EPA 200.8: Al,Sb,As,Be,Cd,Cr,Cu,Pb,Mn,Ni,Se,Ag,Tl,Zn;
EPA 200.7: Al,Sb,As,Be,Cd,Ca,Cr,Co,Cu,Fe,Pb,Mg,Mn,Mo,Ni,K,Se,Ag,Na,Sr,Ti,Tl,V,Zn;
EPA 245.1, SM4500H,B, EPA 120.1, SM2510B, SM2540C, SM2340B, SM2320B, SM4500CL-E, SM4500F-BC, SM426C, SM4500NH3-BH, **EPA 350.1**: Ammonia-N, **LACHAT 10-107-06-1-B**: Ammonia-N, **SM4500NO3-F, EPA 353.2**: Nitrate-N**, SM4500NH3-BC-NES, EPA 351.1, SM4500P-E, SM4500P-B, E, SM5220D, EPA 410.4, SM5210B, SM5310C, SM4500CL-D, EPA 1664, SM14 510AC, EPA 420.1, SM4500-CN-CE, SM2540D.**
EPA 624: Volatile Halocarbons & Aromatics,
EPA 608: Chlordane, Toxaphene, Aldrin, alpha-BHC, beta-BHC, gamma-BHC, delta-BHC, Dieldrin, DDD, DDE, DDT, Endosulfan I, Endosulfan II, Endosulfan sulfate, Endrin, Endrin Aldehyde, Heptachlor, Heptachlor Epoxide, PCBs
EPA 625: SVOC (Acid/Base/Neutral Extractables), **EPA 600/4-81-045**: PCB-Oil.
Microbiology: **SM9223B-Colilert-QT; Enterolert-QT, SM9222D-MF**.

For a complete listing of analytes and methods, please contact your Alpha Project Manager.

mg 10/29/15 updated COC

Serial_No:10291514:28

CHAIN OF CUSTODY

PAGE 1 OF 1

ALPHA ANALYTICAL

8 Walkup Drive
Westboro, MA 01581
Tel: 508-898-9220

320 Forbes Blvd
Mansfield, MA 02048
Tel: 508-822-9300

Date Rec'd in Lab: 10/14/15

ALPHA Job #: L1525997

Client Information

Client: TRC

Address: 650 SUFFOLK ST
LOWELL MA

Phone:

Email:

Project Information

Project Name: NBHS OXN

Project Location: NEW BEDFORD

Project #:

Project Manager:

ALPHA Quote #:

Turn-Around Time

☑ Standard ☐ RUSH (only confirmed if pre-approved!)

Date Due:

Report Information - Data Deliverables

☐ ADEx ☐ EMAIL

Billing Information

☐ Same as Client info PO #:

Regulatory Requirements & Project Information Requirements

☐ Yes ☐ No MA MCP Analytical Methods ☐ Yes ☐ No CT RCP Analytical Methods
☐ Yes ☐ No Matrix Spike Required on this SDG? (Required for MCP Inorganics)
☐ Yes ☐ No GW1 Standards (Info Required for Metals & EPH with Targets)
☐ Yes ☐ No NPDES RGP
☐ Other State /Fed Program _____ Criteria _____

Additional Project Information:

ANALYSIS

ALPHA Lab ID (Lab Use Only)	Sample ID	Collection Date	Collection Time	Sample Matrix	Sampler Initials	VOC: ☑ 8260 ☐ 624 ☐ 524.2	SVOC: ☐ ABN ☐ PAH	METALS: ☐ MCP 13 ☐ MCP 14 ☐ RCP 15	METALS: ☐ RCRA5 ☐ RCRA8 ☐ PP13	EPH: ☐ Ranges & Targets ☐ Ranges Only	VPH: ☐ Ranges & Targets ☐ Ranges Only	☑ PCB ☐ PEST	TPH: ☐ Quant Only ☐ Fingerprint	Sample Comments	TOTAL # BOTTLES
25997-01	~~VAPOR~~ INFLUENT	10/13	~~8:15~~ 09:45	L	JF	✓						✓			5
02	EFFLUENT	10/13	~~9:45~~	E	JF	✓						✓			5
03	TRIP BLANK		08:15			✓									2

SAMPLE INFO
Filtration
☐ Field
☐ Lab to do
Preservation
☐ Lab to do

Container Type	V						A								
Preservative	B						A								

Container Type
P= Plastic
A= Amber glass
V= Vial
G= Glass
B= Bacteria cup
C= Cube
O= Other
E= Encore
D= BOD Bottle

Preservative
A= None
B= HCl
C= HNO_3
D= H_2SO_4
E= NaOH
F= MeOH
G= $NaHSO_4$
H= $Na_2S_2O_3$
I= Ascorbic Acid
J= NH_4Cl
K= Zn Acetate
O= Other

Relinquished By:	Date/Time	Received By:	Date/Time
[signature] 10/14/15	10/14/15 1640	[signature] AHL	10/14/15 0950
		[signature] MCL	10/14/15 1640

All samples submitted are subject to Alpha's Terms and Conditions. See reverse side.

FORM NO: 01-01 (rev. 12-Mar-2012)

CHAIN OF CUSTODY

PAGE 1 OF 1

ALPHA ANALYTICAL
8 Walkup Drive
Westboro, MA 01581
Tel: 508-898-9220

320 Forbes Blvd
Mansfield, MA 02048
Tel: 508-822-9300

Date Rec'd in Lab: 10/14/15

ALPHA Job #: L1525997

Client Information

Client: TRC

Address: 650 SUFFOLK ST
LOWELL MA

Phone:

Email:

Project Information

Project Name: NBHS OXN

Project Location: NEW BEDFORD

Project #:

Project Manager:

ALPHA Quote #:

Turn-Around Time

☑ Standard ☐ RUSH (only confirmed if pre-approved!)

Date Due:

Report Information - Data Deliverables

☐ ADEx ☐ EMAIL

Billing Information

☐ Same as Client info PO #:

Regulatory Requirements & Project Information Requirements

☐ Yes ☐ No MA MCP Analytical Methods ☐ Yes ☐ No CT RCP Analytical Methods
☐ Yes ☐ No Matrix Spike Required on this SDG? (Required for MCP Inorganics)
☐ Yes ☐ No GW1 Standards (Info Required for Metals & EPH with Targets)
☐ Yes ☐ No NPDES RGP
☐ Other State /Fed Program _____ Criteria _____

Additional Project Information:

ANALYSIS

ALPHA Lab ID (Lab Use Only)	Sample ID	Collection Date	Collection Time	Sample Matrix	Sampler Initials	VOC: ☑ 8260 ☐ 624 ☐ 524.2	SVOC: ☐ ABN ☐ PAH	METALS: ☐ MCP 13 ☐ MCP 14 ☐ RCP 15	METALS: ☐ RCRA5 ☐ RCRA8 ☐ PP13	EPH: ☐ Ranges & Targets ☐ Ranges Only	VPH: ☐ Ranges & Targets ☐ Ranges Only	☑ PCB ☐ PEST	TPH: ☐ Quant Only ☐ Fingerprint	Sample Comments	TOTAL # BOTTLES
25997-01	~~VAPOR~~ INFLUENT	10/13	8:15	L	JF	✓						✓			5
02	EFFLUENT	10/13	9:45	G	JF	✓						✓			5
03	TRIP BLANK					✓									2
Container Type						V						A			
Preservative						B						A			

SAMPLE INFO
Filtration
☐ Field
☐ Lab to do
Preservation
☐ Lab to do

Container Type
P= Plastic
A= Amber glass
V= Vial
G= Glass
B= Bacteria cup
C= Cube
O= Other
E= Encore
D= BOD Bottle

Preservative
A= None
B= HCl
C= HNO_3
D= H_2SO_4
E= NaOH
F= MeOH
G= $NaHSO_4$
H = $Na_2S_2O_3$
I= Ascorbic Acid
J = NH_4Cl
K= Zn Acetate
O= Other

Relinquished By:	Date/Time	Received By:	Date/Time
[signature] 10/14/15 1640	10/14/15	[signature] AHL	10/14/15 0950
		[signature] MCL	10/14/15 1640

All samples submitted are subject to Alpha's Terms and Conditions. See reverse side.

FORM NO: 01-01 (rev. 12-Mar-2012)

7A
Volatile Organics CONTINUING CALIBRATION CHECK

Lab Name: Alpha Analytical Labs

SDG No.: L1525997

Instrument ID: Quimby.i Calibration Date: 26-OCT-2015 Time: 04:10

Lab File ID: 1026A02 Init. Calib. Date(s): 08-OCT-2 08-OCT-2

Sample No: 8260 CCAL Init. Calib. Times : 19:57 23:10

Compound	RRF	RRF	MIN RRF	%D	MAX %D	
dichlorodifluoromethane	.30077	.31926	.1	6	20	
chloromethane	.34498	.37494	.1	9	20	
vinyl chloride	.32621	.31933	.1	-2	20	
bromomethane	.23686	.23331	.1	-1	20	
chloroethane	.19844	.22287	.1	12	20	
trichlorofluoromethane	.55421	.50388	.1	-9	20	
ethyl ether	.16247	.16299	.05	0	20	
acrolein	.01902	.02687	.05	41	20	F
freon-113	.30446	.29762	.1	-2	20	
acetone	100	82.864	.1	-17	20	
1,1,-dichloroethene	.30839	.28174	.1	-9	20	
tert-butyl alcohol	.01095	.01154	.05	5	20	F
iodomethane	.35624	.16818	.05	-53	20	F
methyl acetate	.13168	.14678	.01	11	20	
carbon disulfide	.85191	.79358	.1	-7	20	
methylene chloride	.32542	.31939	.1	-2	20	
acrylonitrile	.09482	.09777	.05	3	20	
methyl tert butyl ether	.50853	.54806	.1	8	20	
Halothane	.22899	.2267	.05	-1	20	
trans-1,2-dichloroethene	.31611	.3045	.1	-4	20	
Diisopropyl Ether	1.0900	1.1314	.05	4	20	
1,1-dichloroethane	.57131	.61066	.2	7	20	
vinyl acetate	100	102	.05	2	20	
Ethyl-Tert-Butyl-Ether	.712	.77884	.05	9	20	
2-butanone	.0904	.08746	.1	-3	20	F
2,2-dichloropropane	100	86.544	.05	-13	20	
ethyl acetate	.18453	.17775	.05	-4	20	
cis-1,2-dichloroethene	.3458	.3383	.1	-2	20	
chloroform	.62898	.57767	.2	-8	20	
bromochloromethane	.14597	.14223	.05	-3	20	
tetrahydrofuran	100	93.550	.05	-6	20	
1,1,1-trichloroethane	100	87.341	.1	-13	20	
cyclohexane	.62994	.67906	.01	8	30	
1,1-dichloropropene	.47085	.44434	.05	-6	20	
carbontetrachloride	100	80.696	.1	-19	20	
Tertiary-Amyl Methyl Ether	.57658	.56645	.05	-2	20	
1,2-dichloroethane	.50232	.44777	.1	-11	20	
benzene	1.3632	1.3458	.5	-1	20	

FORM VII MCP-8260-10

7A
CONTINUING CALIBRATION CHECK

Lab Name: Alpha Analytical Labs

SDG No.: L1525997

Instrument ID: Quimby.i Calibration Date: 26-OCT-2015 Time: 04:10

Lab File ID: 1026A02 Init. Calib. Date(s): 08-OCT-2 08-OCT-2

Sample No: 8260 CCAL Init. Calib. Times : 19:57 23:10

Compound	RRF	RRF	MIN RRF	%D	MAX %D	
trichloroethene	.35752	.33371	.2	-7	20	
methyl cyclohexane	.62042	.61896	.01	0	30	
1,2-dichloropropane	.33984	.34057	.1	0	20	
bromodichloromethane	.41135	.36471	.2	-11	20	
1,4-dioxane	.00148	.00177	.05	19	20	F
dibromomethane	.16715	.15928	.05	-5	20	
2-chloroethylvinyl ether	.12778	.1116	.05	-13	20	
4-methyl-2-pentanone	.08721	.07338	.1	-16	20	F
cis-1,3-dichloropropene	100	88.420	.2	-12	20	
toluene	1.0877	1.0804	.4	-1	20	
ethyl-methacrylate	.39379	.34948	.01	-11	20	
trans-1,3-dichloropropene	100	86.169	.1	-14	20	
1,1,2-trichloroethane	.24635	.2395	.1	-3	20	
2-hexanone	.17239	.15366	.1	-11	20	
1,3-dichloropropane	.52181	.5201	.05	0	20	
tetrachloroethene	.47806	.45106	.2	-6	20	
chlorodibromomethane	100	77.548	.1	-22	20	F
1,2-dibromoethane	.25323	.25474	.1	1	20	
chlorobenzene	1.2548	1.2097	.5	-4	20	
1,1,1,2-tetrachloroethane	.38586	.34376	.05	-11	20	
ethyl benzene	2.2141	2.1925	.1	-1	20	
p/m xylene	.86138	.87367	.1	1	20	
o xylene	.81519	.83752	.3	3	20	
styrene	1.3355	1.3745	.31	3	20	
isopropylbenzene	2.2812	2.2607	.1	-1	20	
bromoform	100	79.417	.1	-21	20	F
1,4-dichlorobutane	1.0497	1.0238	.01	-2	20	
1,1,2,2,-tetrachloroethane	.53214	.50954	.3	-4	20	
1,2,3-trichloropropane	.45529	.42325	.05	-7	20	
trans-1,4-dichloro-2-butene	.18422	.1612	.05	-12	20	
n-propylbenzene	4.2027	4.5041	.05	7	20	
bromobenzene	.85249	.83442	.05	-2	20	
4-ethyltoluene	2.1023	2.1189	.05	1	20	
1,3,5-trimethybenzene	3.2814	3.4092	.05	4	20	
2-chlorotoluene	3.0386	3.0808	.05	1	20	
4-chorotoluene	2.8407	2.8812	.05	1	20	
tert-butylbenzene	2.7325	2.7955	.05	2	20	
1,2,4-trimethylbenzene	3.2400	3.3098	.05	2	20	

FORM VII MCP-8260-10

7A
CONTINUING CALIBRATION CHECK

Lab Name: Alpha Analytical Labs

SDG No.: L1525997

Instrument ID: Quimby.i Calibration Date: 26-OCT-2015 Time: 04:10

Lab File ID: 1026A02 Init. Calib. Date(s): 08-OCT-2 08-OCT-2

Sample No: 8260 CCAL Init. Calib. Times : 19:57 23:10

Compound	RRF	RRF	MIN RRF	%D	MAX %D	
sec-butylbenzene	3.9496	4.1701	.05	6	20	
p-isopropyltoluene	3.7205	3.6090	.05	-3	20	
1,3-dichlorobenzene	1.7923	1.7666	.6	-1	20	
1,4-dichlorobenzene	1.7955	1.7490	.5	-3	20	
n-butylbenzene	3.7544	3.8189	.05	2	20	
p-diethylbenzene	1.2494	1.1250	.05	-10	20	
1,2-dichlorobenzene	1.5908	1.5414	.4	-3	20	
1,2,4,5-tetramethylbenezene	1.7541	1.6450	.05	-6	20	
1,2-dibromo-3-chloropropane	.08621	.05746	.05	-33	20	F
1,3,5-trichlorobenzene	1.2530	1.2011	.01	-4	30	
1,2,4-trichlorobenzene	.87153	.73019	.2	-16	20	
hexachlorobutadiene	.45959	.4383	.05	-5	20	
naphthalene	100	75.023	.05	-25	20	F
1,2,3-trichlorobenzene	.62873	.48498	.05	-23	20	F
dibromofluoromethane	.24213	.23587	.05	-3	20	
1,2-dichloroethane-d4	.32876	.30215	.05	-8	20	
toluene-d8	1.2452	1.2780	.05	3	20	
4-bromofluorobenzene	.88422	.897	.05	1	20	

FORM VII MCP-8260-10

7A
CONTINUING CALIBRATION CHECK

Lab Name: Alpha Analytical Labs

SDG No.: L1525997

Instrument ID: Jack.i Calibration Date: 27-OCT-2015 Time: 05:13

Lab File ID: 1027A04 Init. Calib. Date(s): 12-OCT-2 12-OCT-2

Sample No: 8260 CCAL Init. Calib. Times : 11:05 14:19

Compound	RRF	RRF	MIN RRF	%D	MAX %D	
dichlorodifluoromethane	.64845	.61552	.1	-5	20	
chloromethane	.97727	.93081	.1	-5	20	
vinyl chloride	.82783	.83439	.1	1	20	
bromomethane	.32615	.29239	.1	-10	20	
chloroethane	.41172	.48337	.1	17	20	
trichlorofluoromethane	.9394	.9309	.1	-1	20	
ethyl ether	.29204	.29638	.05	1	20	
1,1,-dichloroethene	.56977	.6009	.1	5	20	
carbon disulfide	1.7088	1.7722	.1	4	20	
freon-113	.58548	.62213	.1	6	20	
iodomethane	100	75.757	.05	-24	20	F
acrolein	.06061	.05832	.05	-4	20	
methylene chloride	.59702	.54889	.1	-8	20	
acetone	100	98.018	.1	-2	20	
trans-1,2-dichloroethene	.63117	.59506	.1	-6	20	
methyl acetate	.3058	.26791	.1	-12	20	
methyl tert butyl ether	1.2511	.86194	.1	-31	20	F
tert butyl alcohol	.02869	.02892	.05	1	20	F
Diisopropyl Ether	2.7426	2.5750	.01	-6	20	
1,1-dichloroethane	1.3683	1.3793	.2	1	20	
acrylonitrile	.19629	.17965	.05	-8	20	
Halothane	.57072	.56455	.05	-1	20	
Ethyl-Tert-Butyl-Ether	1.9844	1.7759	.05	-11	20	
vinyl acetate	1.4429	1.3262	.05	-8	20	
cis-1,2-dichloroethene	.76984	.7823	.1	2	20	
2,2-dichloropropane	.96888	.9796	.05	1	20	
cyclohexane	1.5098	1.4803	.01	-2	30	
bromochloromethane	.30597	.33999	.05	11	20	
chloroform	1.1667	1.1698	.2	0	20	
carbontetrachloride	.93122	.89966	.1	-3	20	
tetrahydrofuran	.16797	.15285	.05	-9	20	
ethyl acetate	.46515	.41648	.05	-10	20	
1,1,1-trichloroethane	1.0560	1.0228	.1	-3	20	
1,1-dichloropropene	.90464	.89333	.05	-1	20	
2-butanone	.19059	.16486	.1	-13	20	
benzene	2.7957	2.7965	.5	0	20	
Tertiary-Amyl Methyl Ether	1.4021	1.3135	.05	-6	20	
1,2-dichloroethane	.80995	.75617	.1	-7	20	

FORM VII MCP-8260-10

7A
CONTINUING CALIBRATION CHECK

Lab Name: Alpha Analytical Labs

SDG No.: L1525997

Instrument ID: Jack.i Calibration Date: 27-OCT-2015 Time: 05:13

Lab File ID: 1027A04 Init. Calib. Date(s): 12-OCT-2 12-OCT-2

Sample No: 8260 CCAL Init. Calib. Times : 11:05 14:19

Compound	RRF	RRF	MIN RRF	%D	MAX %D	
methyl cyclohexane	1.2391	1.2256	.01	-1	30	
trichloroethene	.71123	.70439	.2	-1	20	
dibromomethane	.35257	.36385	.05	3	20	
1,2-dichloropropane	.73853	.72497	.1	-2	20	
bromodichloromethane	.80055	.73788	.2	-8	20	
1,4-dioxane	.00297	.00289	.05	-2	20	F
2-chloroethylvinyl ether	.27066	.16058	.05	-41	20	F
cis-1,3-dichloropropene	.94696	.92022	.2	-3	20	
toluene	2.1705	2.2094	.4	2	20	
tetrachloroethene	1.0234	1.0582	.2	3	20	
4-methyl-2-pentanone	.15137	.1503	.1	-1	20	
trans-1,3-dichloropropene	.8899	.85288	.1	-4	20	
1,1,2-trichloroethane	.45228	.44902	.1	-1	20	
ethyl-methacrylate	.72126	.69955	.01	-3	30	
chlorodibromomethane	.66722	.63804	.1	-4	20	
1,3-dichloropropane	.95209	.92997	.05	-2	20	
1,2-dibromoethane	.51877	.53083	.1	2	20	
2-hexanone	.32965	.29727	.1	-10	20	
chlorobenzene	2.4227	2.5090	.5	4	20	
ethyl benzene	4.0737	4.1709	.1	2	20	
1,1,1,2-tetrachloroethane	.83842	.82382	.05	-2	20	
p/m xylene	1.6470	1.6981	.1	3	20	
o xylene	1.5375	1.6408	.3	7	20	
bromoform	.64153	.59821	.1	-7	20	
styrene	2.4785	2.6184	.3	6	20	
isopropylbenzene	8.2002	8.1839	.1	0	20	
bromobenzene	1.9059	1.8766	.05	-2	20	
1,4-dichlorobutane	2.2647	2.1517	.01	-5	30	
n-propylbenzene	6.1637	6.0620	.05	-2	20	
1,1,2,2,-tetrachloroethane	1.0394	1.0436	.3	0	20	
4-ethyltoluene	8.9079	8.7794	.05	-1	20	
2-chlorotoluene	6.1637	6.0620	.05	-2	20	
1,2,3-trichloropropane	.89186	.86738	.05	-3	20	
1,3,5-trimethybenzene	6.8613	6.6324	.05	-3	20	
trans-1,4-dichloro-2-butene	.34856	.3224	.05	-8	20	
4-chorotoluene	5.4477	5.4083	.05	-1	20	
tert-butylbenzene	6.1050	5.8819	.05	-4	20	
1,2,4-trimethylbenzene	6.7124	6.6124	.05	-1	20	

FORM VII MCP-8260-10

7A
CONTINUING CALIBRATION CHECK

Lab Name: Alpha Analytical Labs

SDG No.: L1525997

Instrument ID: Jack.i Calibration Date: 27-OCT-2015 Time: 05:13

Lab File ID: 1027A04 Init. Calib. Date(s): 12-OCT-2 12-OCT-2

Sample No: 8260 CCAL Init. Calib. Times : 11:05 14:19

Compound	RRF	RRF	MIN RRF	%D	MAX %D	
sec-butylbenzene	8.5387	8.5126	.01	0	20	
p-isopropyltoluene	7.6423	7.4073	.05	-3	20	
1,3-dichlorobenzene	3.8379	3.8074	.6	-1	20	
1,4-dichlorobenzene	3.6705	3.6037	.5	-2	20	
p-diethylbenzene	4.2929	4.2214	.05	-2	20	
n-butylbenzene	5.5099	5.6089	.05	2	20	
1,2-dichlorobenzene	3.3135	3.2100	.4	-3	20	
1,2,4,5-tetramethylbenzene	5.6130	5.5894	.05	0	20	
1,2-dibromo-3-chloropropane	.13751	.11403	.05	-17	20	
1,3,5-trichlorobenzene	.92433	.97812	.05	6	20	
1,2,4-trichlorobenzene	100	78.048	.2	-22	20	F
hexachlorobutadiene	.64557	.67163	.05	4	20	
naphthalene	100	69.233	.05	-31	20	F
1,2,3-trichlorobenzene	100	84.527	.05	-15	20	
dibromofluoromethane	.24936	.24628	.05	-1	20	
1,2-dichloroethane-d4	.27078	.25614	.05	-5	20	
toluene-d8	1.1679	1.2033	.01	3	20	
4-bromofluorobenzene	.86106	.80981	.05	-6	20	

FORM VII MCP-8260-10

QUARTERLY DISCHARGE MONITORING ANALYTICAL DATA

ANALYTICAL REPORT

Lab Number:	L1512537
Client:	TRC Environmental Consultants Wannalancit Mills 650 Suffolk Street Lowell, MA 01854
ATTN:	David Sullivan
Phone:	(978) 656-3600
Project Name:	NBHS IRA POTW
Project Number:	115058
Report Date:	06/16/15

The original project report/data package is held by Alpha Analytical. This report/data package is paginated and should be reproduced only in its entirety. Alpha Analytical holds no responsibility for results and/or data that are not consistent with the original.

Certifications & Approvals: MA (M-MA086), NY (11148), CT (PH-0574), NH (2003), NJ NELAP (MA935), RI (LAO00065), ME (MA00086), PA (68-03671), VA (460195), MD (348), IL (200077), NC (666), TX (T104704476), DOD (L2217), USDA (Permit #P-330-11-00240).

Eight Walkup Drive, Westborough, MA 01581-1019
508-898-9220 (Fax) 508-898-9193 800-624-9220 - www.alphalab.com

Project Name: NBHS IRA POTW
Project Number: 115058

Lab Number: L1512537
Report Date: 06/16/15

Alpha Sample ID	Client ID	Matrix	Sample Location	Collection Date/Time	Receive Date
L1512537-01	EFFLUENT (COMP)	WATER	NEW BEDFORD, MA	06/05/15 00:00	06/05/15
L1512537-02	EFFLUENT (1-4)	WATER	NEW BEDFORD, MA	06/05/15 06:30	06/05/15
L1512537-03	EFFLUENT (GRAB)	WATER	NEW BEDFORD, MA	06/05/15 06:30	06/05/15
L1512537-04	EFFLUENT (COMP GRABS 1 THRU 4)	WATER	NEW BEDFORD, MA	06/05/15 00:00	06/05/15

Project Name: NBHS IRA POTW **Lab Number:** L1512537
Project Number: 115058 **Report Date:** 06/16/15

Case Narrative

The samples were received in accordance with the Chain of Custody and no significant deviations were encountered during the preparation or analysis unless otherwise noted. Sample Receipt, Container Information, and the Chain of Custody are located at the back of the report.

Results contained within this report relate only to the samples submitted under this Alpha Lab Number and meet all of the requirements of NELAC, for all NELAC accredited parameters. The data presented in this report is organized by parameter (i.e. VOC, SVOC, etc.). Sample specific Quality Control data (i.e. Surrogate Spike Recovery) is reported at the end of the target analyte list for each individual sample, followed by the Laboratory Batch Quality Control at the end of each parameter. If a sample was re-analyzed or re-extracted due to a required quality control corrective action and if both sets of data are reported, the Laboratory ID of the re-analysis or re-extraction is designated with an "R" or "RE", respectively. When multiple Batch Quality Control elements are reported (e.g. more than one LCS), the associated samples for each element are noted in the grey shaded header line of each data table. Any Laboratory Batch, Sample Specific % recovery or RPD value that is outside the listed Acceptance Criteria is bolded in the report. All specific QC information is also incorporated in the Data Usability format of our Data Merger tool where it can be reviewed along with any associated usability implications. Soil/sediments, solids and tissues are reported on a dry weight basis unless otherwise noted. Definitions of all data qualifiers and acronyms used in this report are provided in the Glossary located at the back of the report.

In reference to questions H (CAM) or 4 (RCP) when "NO" is checked, the performance criteria for CAM and RCP methods allow for some quality control failures to occur and still be within method compliance. In these instances the specific failure is not narrated but noted in the associated QC table. The information is also incorporated in the Data Usability format of our Data Merger tool where it can be reviewed along with any associated usability implications.

Please see the associated ADEx data file for a comparison of laboratory reporting limits that were achieved with the regulatory Numerical Standards requested on the Chain of Custody.

HOLD POLICY
For samples submitted on hold, Alpha's policy is to hold samples (with the exception of Air canisters) free of charge for 21 calendar days from the date the project is completed. After 21 calendar days, we will dispose of all samples submitted including those put on hold unless you have contacted your Client Service Representative and made arrangements for Alpha to continue to hold the samples. Air canisters will be disposed after 3 business days from the date the project is completed.

Please contact Client Services at 800-624-9220 with any questions.

Project Name: NBHS IRA POTW **Lab Number:** L1512537
Project Number: 115058 **Report Date:** 06/16/15

Case Narrative (continued)

Volatile Organics

The WG791499-1 LCS recoveries for methylene chloride (112%), carbon tetrachloride (113%), 1,1,1-trichloroethane (110%), cis-1,3-dichloropropene (113%), toluene (127%), ethylbenzene (126%), 1,1-dichloroethene (120%), trichloroethene (121%), and p/m-xylene (126%), associated with L1512537-02, are outside Alpha's acceptance criteria, but within the acceptance criteria specified in the method.

I, the undersigned, attest under the pains and penalties of perjury that, to the best of my knowledge and belief and based upon my personal inquiry of those responsible for providing the information contained in this analytical report, such information is accurate and complete. This certificate of analysis is not complete unless this page accompanies any and all pages of this report.

Authorized Signature: Kelly Stenstrom

Title: Technical Director/Representative Date: 06/16/15

ORGANICS

VOLATILES

Project Name: NBHS IRA POTW **Lab Number:** L1512537

Project Number: 115058 **Report Date:** 06/16/15

SAMPLE RESULTS

Lab ID:	L1512537-02	Date Collected:	06/05/15 06:30
Client ID:	EFFLUENT (1-4)	Date Received:	06/05/15
Sample Location:	NEW BEDFORD, MA	Field Prep:	Not Specified
Matrix:	Water		
Analytical Method:	5,624		
Analytical Date:	06/07/15 21:54		
Analyst:	PK		

Parameter	Result	Qualifier	Units	RL	MDL	Dilution Factor
Volatile Organics by GC/MS - Westborough Lab						
Methylene chloride	ND		ug/l	5.0	--	1
1,1-Dichloroethane	ND		ug/l	1.5	--	1
Chloroform	ND		ug/l	1.5	--	1
Carbon tetrachloride	ND		ug/l	1.0	--	1
1,2-Dichloropropane	ND		ug/l	3.5	--	1
Dibromochloromethane	ND		ug/l	1.0	--	1
1,1,2-Trichloroethane	ND		ug/l	1.5	--	1
2-Chloroethylvinyl ether	ND		ug/l	10	--	1
Tetrachloroethene	ND		ug/l	1.5	--	1
Chlorobenzene	ND		ug/l	3.5	--	1
Trichlorofluoromethane	ND		ug/l	5.0	--	1
1,2-Dichloroethane	ND		ug/l	1.5	--	1
1,1,1-Trichloroethane	ND		ug/l	2.0	--	1
Bromodichloromethane	ND		ug/l	1.0	--	1
trans-1,3-Dichloropropene	ND		ug/l	1.5	--	1
cis-1,3-Dichloropropene	ND		ug/l	1.5	--	1
Bromoform	ND		ug/l	1.0	--	1
1,1,2,2-Tetrachloroethane	ND		ug/l	1.0	--	1
Benzene	ND		ug/l	1.0	--	1
Toluene	ND		ug/l	1.0	--	1
Ethylbenzene	ND		ug/l	1.0	--	1
Chloromethane	ND		ug/l	5.0	--	1
Bromomethane	ND		ug/l	5.0	--	1
Vinyl chloride	ND		ug/l	1.0	--	1
Chloroethane	ND		ug/l	2.0	--	1
1,1-Dichloroethene	ND		ug/l	1.0	--	1
trans-1,2-Dichloroethene	19		ug/l	1.5	--	1
cis-1,2-Dichloroethene[1]	21		ug/l	1.0	--	1
Trichloroethene	ND		ug/l	1.0	--	1
1,2-Dichlorobenzene	ND		ug/l	5.0	--	1

Project Name: NBHS IRA POTW **Lab Number:** L1512537

Project Number: 115058 **Report Date:** 06/16/15

SAMPLE RESULTS

Lab ID: L1512537-02 Date Collected: 06/05/15 06:30

Client ID: EFFLUENT (1-4) Date Received: 06/05/15

Sample Location: NEW BEDFORD, MA Field Prep: Not Specified

Parameter	Result	Qualifier	Units	RL	MDL	Dilution Factor
Volatile Organics by GC/MS - Westborough Lab						
1,3-Dichlorobenzene	ND		ug/l	5.0	--	1
1,4-Dichlorobenzene	ND		ug/l	5.0	--	1
p/m-Xylene[1]	ND		ug/l	2.0	--	1
o-xylene[1]	ND		ug/l	1.0	--	1
Xylenes, Total[1]	ND		ug/l	1.0	--	1
Styrene[1]	ND		ug/l	1.0	--	1
Acetone[1]	ND		ug/l	10	--	1
Carbon disulfide[1]	ND		ug/l	5.0	--	1
2-Butanone[1]	ND		ug/l	10	--	1
Vinyl acetate[1]	ND		ug/l	10	--	1
4-Methyl-2-pentanone[1]	ND		ug/l	10	--	1
2-Hexanone[1]	ND		ug/l	10	--	1
Acrolein[1]	ND		ug/l	8.0	--	1
Acrylonitrile[1]	ND		ug/l	10	--	1
Dibromomethane[1]	ND		ug/l	1.0	--	1

Surrogate	% Recovery	Qualifier	Acceptance Criteria
Pentafluorobenzene	114		80-120
Fluorobenzene	103		80-120
4-Bromofluorobenzene	108		80-120

Project Name: NBHS IRA POTW **Lab Number:** L1512537

Project Number: 115058 **Report Date:** 06/16/15

Method Blank Analysis
Batch Quality Control

Analytical Method: 5,624
Analytical Date: 06/07/15 19:01
Analyst: PK

Parameter	Result	Qualifier	Units	RL	MDL
Volatile Organics by GC/MS - Westborough Lab for sample(s): 02 Batch: WG791499-2					
Methylene chloride	ND		ug/l	5.0	--
1,1-Dichloroethane	ND		ug/l	1.5	--
Chloroform	ND		ug/l	1.5	--
Carbon tetrachloride	ND		ug/l	1.0	--
1,2-Dichloropropane	ND		ug/l	3.5	--
Dibromochloromethane	ND		ug/l	1.0	--
1,1,2-Trichloroethane	ND		ug/l	1.5	--
2-Chloroethylvinyl ether	ND		ug/l	10	--
Tetrachloroethene	ND		ug/l	1.5	--
Chlorobenzene	ND		ug/l	3.5	--
Trichlorofluoromethane	ND		ug/l	5.0	--
1,2-Dichloroethane	ND		ug/l	1.5	--
1,1,1-Trichloroethane	ND		ug/l	2.0	--
Bromodichloromethane	ND		ug/l	1.0	--
trans-1,3-Dichloropropene	ND		ug/l	1.5	--
cis-1,3-Dichloropropene	ND		ug/l	1.5	--
Bromoform	ND		ug/l	1.0	--
1,1,2,2-Tetrachloroethane	ND		ug/l	1.0	--
Benzene	ND		ug/l	1.0	--
Toluene	ND		ug/l	1.0	--
Ethylbenzene	ND		ug/l	1.0	--
Chloromethane	ND		ug/l	5.0	--
Bromomethane	ND		ug/l	5.0	--
Vinyl chloride	ND		ug/l	1.0	--
Chloroethane	ND		ug/l	2.0	--
1,1-Dichloroethene	ND		ug/l	1.0	--
trans-1,2-Dichloroethene	ND		ug/l	1.5	--
cis-1,2-Dichloroethene[1]	ND		ug/l	1.0	--
Trichloroethene	ND		ug/l	1.0	--

Project Name: NBHS IRA POTW **Lab Number:** L1512537

Project Number: 115058 **Report Date:** 06/16/15

Method Blank Analysis
Batch Quality Control

Analytical Method: 5,624
Analytical Date: 06/07/15 19:01
Analyst: PK

Parameter	Result	Qualifier	Units	RL	MDL
Volatile Organics by GC/MS - Westborough Lab for sample(s): 02 Batch: WG791499-2					
1,2-Dichlorobenzene	ND		ug/l	5.0	--
1,3-Dichlorobenzene	ND		ug/l	5.0	--
1,4-Dichlorobenzene	ND		ug/l	5.0	--
p/m-Xylene[1]	ND		ug/l	2.0	--
o-Xylene[1]	ND		ug/l	1.0	--
Xylene (Total)[1]	ND		ug/l	1.0	--
Styrene[1]	ND		ug/l	1.0	--
Acetone[1]	ND		ug/l	10	--
Carbon disulfide[1]	ND		ug/l	5.0	--
2-Butanone[1]	ND		ug/l	10	--
Vinyl acetate[1]	ND		ug/l	10	--
4-Methyl-2-pentanone[1]	ND		ug/l	10	--
2-Hexanone[1]	ND		ug/l	10	--
Acrolein[1]	ND		ug/l	8.0	--
Acrylonitrile[1]	ND		ug/l	10	--
Methyl tert butyl ether[1]	ND		ug/l	10	--
Dibromomethane[1]	ND		ug/l	1.0	--
1,4-Dioxane[1]	ND		ug/l	2000	--
tert-Butyl Alcohol[1]	ND		ug/l	100	--
Tertiary-Amyl Methyl Ether[1]	ND		ug/l	20	--

Surrogate	%Recovery	Qualifier	Acceptance Criteria
Pentafluorobenzene	110		80-120
Fluorobenzene	97		80-120
4-Bromofluorobenzene	120		80-120

Lab Control Sample Analysis
Batch Quality Control

Project Name: NBHS IRA POTW
Project Number: 115058

Lab Number: L1512537
Report Date: 06/16/15

Parameter	LCS %Recovery	Qual	LCSD %Recovery	Qual	%Recovery Limits	RPD	Qual	RPD Limits
Volatile Organics by GC/MS - Westborough Lab Associated sample(s): 02 Batch: WG791499-1								
Methylene chloride	**112**	Q	-		70-111	-		30
1,1-Dichloroethane	102		-		78-116	-		30
Chloroform	109		-		86-111	-		30
Carbon tetrachloride	**113**	Q	-		60-112	-		30
1,2-Dichloropropane	102		-		83-113	-		30
Dibromochloromethane	113		-		58-129	-		30
1,1,2-Trichloroethane	115		-		80-118	-		30
2-Chloroethylvinyl ether	111		-		69-124	-		30
Tetrachloroethene	117		-		80-126	-		30
Chlorobenzene	119		-		80-126	-		30
Trichlorofluoromethane	112		-		83-128	-		30
1,2-Dichloroethane	98		-		82-110	-		30
1,1,1-Trichloroethane	**110**	Q	-		72-109	-		30
Bromodichloromethane	111		-		71-120	-		30
trans-1,3-Dichloropropene	95		-		73-106	-		30
cis-1,3-Dichloropropene	**113**	Q	-		78-111	-		30
Bromoform	119		-		45-131	-		30
1,1,2,2-Tetrachloroethane	119		-		81-122	-		30
Benzene	113		-		84-116	-		30
Toluene	**127**	Q	-		83-121	-		30
Ethylbenzene	**126**	Q	-		84-123	-		30

Lab Control Sample Analysis
Batch Quality Control

Project Name: NBHS IRA POTW
Project Number: 115058

Lab Number: L1512537
Report Date: 06/16/15

Parameter	LCS %Recovery	Qual	LCSD %Recovery	Qual	%Recovery Limits	RPD	Qual	RPD Limits
Volatile Organics by GC/MS - Westborough Lab Associated sample(s): 02 Batch: WG791499-1								
Chloromethane	93		-		70-144	-		30
Bromomethane	102		-		63-141	-		30
Vinyl chloride	106		-		56-118	-		30
Chloroethane	107		-		74-130	-		30
1,1-Dichloroethene	**120**	Q	-		77-116	-		30
trans-1,2-Dichloroethene	116		-		81-121	-		30
cis-1,2-Dichloroethene[1]	110		-		85-110	-		30
Trichloroethene	**121**	Q	-		84-118	-		30
1,2-Dichlorobenzene	121		-		78-128	-		30
1,3-Dichlorobenzene	119		-		77-125	-		30
1,4-Dichlorobenzene	119		-		77-125	-		30
p/m-Xylene[1]	**126**	Q	-		81-121	-		30
o-Xylene[1]	118		-		81-124	-		30
Styrene[1]	128		-		84-133	-		30
Acetone[1]	108		-		40-160	-		30
Carbon disulfide[1]	104		-		54-134	-		30
2-Butanone[1]	89		-		57-116	-		30
Vinyl acetate[1]	77		-		40-160	-		30
4-Methyl-2-pentanone[1]	102		-		79-125	-		30
2-Hexanone[1]	84		-		78-120	-		30
Acrolein[1]	98		-		40-160	-		30

Lab Control Sample Analysis
Batch Quality Control

Project Name: NBHS IRA POTW
Project Number: 115058

Lab Number: L1512537
Report Date: 06/16/15

Parameter	LCS %Recovery	Qual	LCSD %Recovery	Qual	%Recovery Limits	RPD	Qual	RPD Limits
Volatile Organics by GC/MS - Westborough Lab Associated sample(s): 02 Batch: WG791499-1								
Acrylonitrile[1]	96		-		66-123	-		30
Methyl tert butyl ether[1]	102		-		57-126	-		30
Dibromomethane[1]	106		-		65-126	-		30
1,4-Dioxane[1]	104		-		74-121	-		30
tert-Butyl Alcohol[1]	110		-		52-114	-		30
Tertiary-Amyl Methyl Ether[1]	99		-		66-111	-		30

Surrogate	LCS %Recovery	Qual	LCSD %Recovery	Qual	Acceptance Criteria
Pentafluorobenzene	117				80-120
Fluorobenzene	104				80-120
4-Bromofluorobenzene	112				80-120

Matrix Spike Analysis
Batch Quality Control

Project Name: NBHS IRA POTW
Project Number: 115058

Lab Number: L1512537
Report Date: 06/16/15

Parameter	Native Sample	MS Added	MS Found	MS %Recovery	Qual	MSD Found	MSD %Recovery	Qual	Recovery Limits	RPD	Qual	RPD Limits
Volatile Organics by GC/MS - Westborough Lab Associated sample(s): 02 QC Batch ID: WG791499-4 QC Sample: L1512588-01 Client ID: MS Sample												
Methylene chloride	ND	200	220	**112**	Q	-	-		70-111	-		30
1,1-Dichloroethane	ND	200	200	103		-	-		78-116	-		30
Chloroform	ND	200	220	**112**	Q	-	-		86-111	-		30
Carbon tetrachloride	ND	200	230	**114**	Q	-	-		60-112	-		30
1,2-Dichloropropane	ND	200	200	100		-	-		83-113	-		30
Dibromochloromethane	ND	200	220	109		-	-		58-129	-		30
1,1,2-Trichloroethane	ND	200	220	113		-	-		80-118	-		30
2-Chloroethylvinyl ether	ND	200	240	120		-	-		69-124	-		30
Tetrachloroethene	ND	200	250	124		-	-		80-126	-		30
Chlorobenzene	ND	200	230	114		-	-		80-126	-		30
Trichlorofluoromethane	ND	200	230	117		-	-		83-128	-		30
1,2-Dichloroethane	ND	200	200	98		-	-		82-110	-		30
1,1,1-Trichloroethane	ND	200	220	**112**	Q	-	-		72-109	-		30
Bromodichloromethane	ND	200	220	110		-	-		71-120	-		30
trans-1,3-Dichloropropene	ND	200	170	85		-	-		73-106	-		30
cis-1,3-Dichloropropene	ND	200	180	88		-	-		78-111	-		30
Bromoform	ND	200	220	108		-	-		45-131	-		30
1,1,2,2-Tetrachloroethane	ND	200	130	**65**	Q	-	-		81-122	-		30
Benzene	ND	200	230	115		-	-		84-116	-		30
Toluene	ND	200	240	**122**	Q	-	-		83-121	-		30
Ethylbenzene	ND	200	250	123		-	-		84-123	-		30

Matrix Spike Analysis
Batch Quality Control

Project Name: NBHS IRA POTW
Project Number: 115058

Lab Number: L1512537
Report Date: 06/16/15

Parameter	Native Sample	MS Added	MS Found	MS %Recovery	Qual	MSD Found	MSD %Recovery	Qual	Recovery Limits	RPD	Qual	RPD Limits
Volatile Organics by GC/MS - Westborough Lab Associated sample(s): 02 QC Batch ID: WG791499-4 QC Sample: L1512588-01 Client ID: MS Sample												
Chloromethane	ND	200	180	89		-	-		70-144	-		30
Bromomethane	ND	200	130	67		-	-		63-141	-		30
Vinyl chloride	ND	200	210	106		-	-		56-118	-		30
Chloroethane	ND	200	220	111		-	-		74-130	-		30
1,1-Dichloroethene	ND	200	240	**120**	Q	-	-		77-116	-		30
trans-1,2-Dichloroethene	ND	200	230	117		-	-		81-121	-		30
cis-1,2-Dichloroethene[1]	ND	200	230	**116**	Q	-	-		85-110	-		30
Trichloroethene	ND	200	330	**166**	Q	-	-		84-118	-		30
1,2-Dichlorobenzene	ND	200	230	113		-	-		78-128	-		30
1,3-Dichlorobenzene	ND	200	220	109		-	-		77-125	-		30
1,4-Dichlorobenzene	ND	200	220	111		-	-		77-125	-		30
p/m-Xylene[1]	ND	400	530	**134**	Q	-	-		81-121	-		30
o-Xylene[1]	ND	200	240	123		-	-		81-124	-		30
Styrene[1]	ND	200	260	133		-	-		84-133	-		30
Acetone[1]	ND	500	540	107		-	-		40-160	-		30
Carbon disulfide[1]	ND	200	220	108		-	-		54-134	-		30
2-Butanone[1]	ND	500	470	94		-	-		57-116	-		30
Vinyl acetate[1]	ND	400	ND	**0**	Q	-	-		40-160	-		30
4-Methyl-2-pentanone[1]	ND	500	580	115		-	-		79-125	-		30
2-Hexanone[1]	ND	500	450	90		-	-		78-120	-		30
Acrolein[1]	ND	400	ND	**0**	Q	-	-		40-160	-		30

Matrix Spike Analysis
Batch Quality Control

Project Name: NBHS IRA POTW
Project Number: 115058

Lab Number: L1512537
Report Date: 06/16/15

Parameter	Native Sample	MS Added	MS Found	MS %Recovery	Qual	MSD Found	MSD %Recovery	Qual	Recovery Limits	RPD	Qual	RPD Limits
Volatile Organics by GC/MS - Westborough Lab Associated sample(s): 02 QC Batch ID: WG791499-4 QC Sample: L1512588-01 Client ID: MS Sample												
Acrylonitrile[1]	ND	400	390	98		-	-		66-123	-		30
Dibromomethane[1]	ND	200	220	112		-	-		65-126	-		30

Surrogate	MS % Recovery	MS Qualifier	MSD % Recovery	MSD Qualifier	Acceptance Criteria
4-Bromofluorobenzene	109				80-120
Fluorobenzene	102				80-120
Pentafluorobenzene	110				80-120

Lab Duplicate Analysis
Batch Quality Control

Project Name: NBHS IRA POTW
Project Number: 115058

Lab Number: L1512537
Report Date: 06/16/15

Parameter	Native Sample	Duplicate Sample	Units	RPD	Qual	RPD Limits
Volatile Organics by GC/MS - Westborough Lab Associated sample(s): 02 QC Batch ID: WG791499-3 QC Sample: L1512588-01 Client ID: DUP Sample						
Methylene chloride	ND	ND	ug/l	NC		30
1,1-Dichloroethane	ND	ND	ug/l	NC		30
Chloroform	ND	ND	ug/l	NC		30
Carbon tetrachloride	ND	ND	ug/l	NC		30
1,2-Dichloropropane	ND	ND	ug/l	NC		30
Dibromochloromethane	ND	ND	ug/l	NC		30
1,1,2-Trichloroethane	ND	ND	ug/l	NC		30
2-Chloroethylvinyl ether	ND	ND	ug/l	NC		30
Tetrachloroethene	ND	ND	ug/l	NC		30
Chlorobenzene	ND	ND	ug/l	NC		30
Trichlorofluoromethane	ND	ND	ug/l	NC		30
1,2-Dichloroethane	ND	ND	ug/l	NC		30
1,1,1-Trichloroethane	ND	ND	ug/l	NC		30
Bromodichloromethane	ND	ND	ug/l	NC		30
trans-1,3-Dichloropropene	ND	ND	ug/l	NC		30
cis-1,3-Dichloropropene	ND	ND	ug/l	NC		30
Bromoform	ND	ND	ug/l	NC		30
1,1,2,2-Tetrachloroethane	ND	ND	ug/l	NC		30
Benzene	ND	ND	ug/l	NC		30

Lab Duplicate Analysis
Batch Quality Control

Project Name: NBHS IRA POTW
Project Number: 115058

Lab Number: L1512537
Report Date: 06/16/15

Parameter	Native Sample	Duplicate Sample	Units	RPD	RPD Limits
Volatile Organics by GC/MS - Westborough Lab Associated sample(s): 02 QC Batch ID: WG791499-3 QC Sample: L1512588-01 Client ID: DUP Sample					
Toluene	ND	ND	ug/l	NC	30
Ethylbenzene	ND	ND	ug/l	NC	30
Chloromethane	ND	ND	ug/l	NC	30
Bromomethane	ND	ND	ug/l	NC	30
Vinyl chloride	ND	ND	ug/l	NC	30
Chloroethane	ND	ND	ug/l	NC	30
1,1-Dichloroethene	ND	ND	ug/l	NC	30
trans-1,2-Dichloroethene	ND	ND	ug/l	NC	30
cis-1,2-Dichloroethene[1]	ND	ND	ug/l	NC	30
Trichloroethene	ND	ND	ug/l	NC	30
1,2-Dichlorobenzene	ND	ND	ug/l	NC	30
1,3-Dichlorobenzene	ND	ND	ug/l	NC	30
1,4-Dichlorobenzene	ND	ND	ug/l	NC	30
p/m-Xylene[1]	ND	ND	ug/l	NC	30
o-Xylene[1]	ND	ND	ug/l	NC	30
Xylene (Total)[1]	ND	ND	ug/l	NC	30
Styrene[1]	ND	ND	ug/l	NC	30
Acetone[1]	ND	ND	ug/l	NC	30
Carbon disulfide[1]	ND	ND	ug/l	NC	30

Lab Duplicate Analysis
Batch Quality Control

Project Name: NBHS IRA POTW
Project Number: 115058

Lab Number: L1512537
Report Date: 06/16/15

Parameter	Native Sample	Duplicate Sample	Units	RPD	RPD Limits
Volatile Organics by GC/MS - Westborough Lab Associated sample(s): 02 QC Batch ID: WG791499-3 QC Sample: L1512588-01 Client ID: DUP Sample					
2-Butanone[1]	ND	ND	ug/l	NC	30
Vinyl acetate[1]	ND	ND	ug/l	NC	30
4-Methyl-2-pentanone[1]	ND	ND	ug/l	NC	30
2-Hexanone[1]	ND	ND	ug/l	NC	30
Acrolein[1]	ND	ND	ug/l	NC	30
Acrylonitrile[1]	ND	ND	ug/l	NC	30
Dibromomethane[1]	ND	ND	ug/l	NC	30

Surrogate	%Recovery	Qualifier	%Recovery	Qualifier	Acceptance Criteria
Pentafluorobenzene	112		110		80-120
Fluorobenzene	102		100		80-120
4-Bromofluorobenzene	116		117		80-120

PCBS

Project Name: NBHS IRA POTW
Project Number: 115058
Lab Number: L1512537
Report Date: 06/16/15

SAMPLE RESULTS

Lab ID:	L1512537-01	Date Collected:	06/05/15 00:00
Client ID:	EFFLUENT (COMP)	Date Received:	06/05/15
Sample Location:	NEW BEDFORD, MA	Field Prep:	Not Specified
Matrix:	Water	Extraction Method:	EPA 608
Analytical Method:	5,608	Extraction Date:	06/09/15 22:47
Analytical Date:	06/10/15 18:22	Cleanup Method:	EPA 3665A
Analyst:	KB	Cleanup Date:	06/10/15
		Cleanup Method:	EPA 3660B
		Cleanup Date:	06/10/15

Parameter	Result	Qualifier	Units	RL	MDL	Dilution Factor	Column
Polychlorinated Biphenyls by GC - Westborough Lab							
Aroclor 1016	ND		ug/l	0.250	--	1	A
Aroclor 1221	ND		ug/l	0.250	--	1	A
Aroclor 1232	ND		ug/l	0.250	--	1	A
Aroclor 1242	ND		ug/l	0.250	--	1	A
Aroclor 1248	ND		ug/l	0.250	--	1	A
Aroclor 1254	ND		ug/l	0.250	--	1	A
Aroclor 1260	ND		ug/l	0.200	--	1	A

Surrogate	% Recovery	Qualifier	Acceptance Criteria	Column
2,4,5,6-Tetrachloro-m-xylene	71		30-150	A
Decachlorobiphenyl	86		30-150	A

Project Name: NBHS IRA POTW

Project Number: 115058

Lab Number: L1512537

Report Date: 06/16/15

Method Blank Analysis
Batch Quality Control

Analytical Method: 5,608
Analytical Date: 06/10/15 20:05
Analyst: KB

Extraction Method: EPA 608
Extraction Date: 06/09/15 22:47
Cleanup Method: EPA 3665A
Cleanup Date: 06/10/15
Cleanup Method: EPA 3660B
Cleanup Date: 06/10/15

Parameter	Result	Qualifier	Units	RL	MDL	Column
Polychlorinated Biphenyls by GC - Westborough Lab for sample(s): 01 Batch: WG792095-1						
Aroclor 1016	ND		ug/l	0.250	--	A
Aroclor 1221	ND		ug/l	0.250	--	A
Aroclor 1232	ND		ug/l	0.250	--	A
Aroclor 1242	ND		ug/l	0.250	--	A
Aroclor 1248	ND		ug/l	0.250	--	A
Aroclor 1254	ND		ug/l	0.250	--	A
Aroclor 1260	ND		ug/l	0.200	--	A

Surrogate	%Recovery	Qualifier	Acceptance Criteria	Column
2,4,5,6-Tetrachloro-m-xylene	66		30-150	A
Decachlorobiphenyl	90		30-150	A

Matrix Spike Analysis
Batch Quality Control

Project Name: NBHS IRA POTW
Project Number: 115058

Lab Number: L1512537
Report Date: 06/16/15

Parameter	Native Sample	MS Added	MS Found	MS %Recovery	Qual	MSD Found	MSD %Recovery	Qual	Recovery Limits	RPD	Qual	RPD Limits	Column
Polychlorinated Biphenyls by GC - Westborough Lab Associated sample(s): 01 QC Batch ID: WG792095-3 QC Sample: L1512630-08 Client ID: MS Sample													
Aroclor 1016	ND	1	0.968	97		-	-		40-140	-		50	A
Aroclor 1260	ND	1	0.707	71		-	-		40-140	-		50	A

Surrogate	MS % Recovery	MS Qualifier	MSD % Recovery	MSD Qualifier	Acceptance Criteria	Column
2,4,5,6-Tetrachloro-m-xylene	60				30-150	A
Decachlorobiphenyl	77				30-150	A

Lab Control Sample Analysis
Batch Quality Control

Project Name: NBHS IRA POTW
Project Number: 115058

Lab Number: L1512537
Report Date: 06/16/15

Parameter	LCS %Recovery	Qual	LCSD %Recovery	Qual	%Recovery Limits	RPD	Qual	RPD Limits	Column
Polychlorinated Biphenyls by GC - Westborough Lab Associated sample(s): 01 Batch: WG792095-2									
Aroclor 1016	84		-		40-140	-		50	A
Aroclor 1260	81		-		40-140	-		50	A

Surrogate	LCS %Recovery	Qual	LCSD %Recovery	Qual	Acceptance Criteria	Column
2,4,5,6-Tetrachloro-m-xylene	61				30-150	A
Decachlorobiphenyl	91				30-150	A

Lab Duplicate Analysis
Batch Quality Control

Project Name: NBHS IRA POTW
Project Number: 115058

Lab Number: L1512537
Report Date: 06/16/15

Parameter	Native Sample	Duplicate Sample	Units	RPD	Qual	RPD Limits	
Polychlorinated Biphenyls by GC - Westborough Lab Associated sample(s): 01 QC Batch ID: WG792095-4 QC Sample: L1512537-01 Client ID: EFFLUENT (COMP)							
Aroclor 1016	ND	ND	ug/l	NC		50	A
Aroclor 1221	ND	ND	ug/l	NC		50	A
Aroclor 1232	ND	ND	ug/l	NC		50	A
Aroclor 1242	ND	ND	ug/l	NC		50	A
Aroclor 1248	ND	ND	ug/l	NC		50	A
Aroclor 1254	ND	ND	ug/l	NC		50	A
Aroclor 1260	ND	ND	ug/l	NC		50	A

Surrogate	%Recovery	Qualifier	%Recovery	Qualifier	Acceptance Criteria	Column
2,4,5,6-Tetrachloro-m-xylene	71		59		30-150	A
Decachlorobiphenyl	86		94		30-150	A

INORGANICS
&
MISCELLANEOUS

Project Name: NBHS IRA POTW
Project Number: 115058

Lab Number: L1512537
Report Date: 06/16/15

SAMPLE RESULTS

Lab ID: L1512537-01
Client ID: EFFLUENT (COMP)
Sample Location: NEW BEDFORD, MA
Matrix: Water

Date Collected: 06/05/15 00:00
Date Received: 06/05/15
Field Prep: Not Specified

Parameter	Result	Qualifier	Units	RL	MDL	Dilution Factor	Date Prepared	Date Analyzed	Analytical Method	Analyst
General Chemistry - Westborough Lab										
Solids, Total Suspended	ND		mg/l	5.0	NA	1	-	06/08/15 19:40	30,2540D	RP
BOD, 5 day	ND		mg/l	2.0	NA	1	06/05/15 22:45	06/10/15 17:00	30,5210B	SE

Project Name: NBHS IRA POTW
Project Number: 115058

Lab Number: L1512537
Report Date: 06/16/15

SAMPLE RESULTS

Lab ID: L1512537-03
Client ID: EFFLUENT (GRAB)
Sample Location: NEW BEDFORD, MA
Matrix: Water

Date Collected: 06/05/15 06:30
Date Received: 06/05/15
Field Prep: Not Specified

Parameter	Result	Qualifier	Units	RL	MDL	Dilution Factor	Date Prepared	Date Analyzed	Analytical Method	Analyst
General Chemistry - Westborough Lab										
pH (H)	6.9		SU	-	NA	1	-	06/06/15 02:40	30,4500H+-B	LH
Oil & Grease, Hem-Grav	ND		mg/l	4.0	--	1	06/10/15 07:45	06/10/15 08:45	74,1664A	ML

Project Name: NBHS IRA POTW **Lab Number:** L1512537

Project Number: 115058 **Report Date:** 06/16/15

Method Blank Analysis
Batch Quality Control

Parameter	Result	Qualifier	Units	RL	MDL	Dilution Factor	Date Prepared	Date Analyzed	Analytical Method	Analyst
General Chemistry - Westborough Lab for sample(s): 01 Batch: WG791187-1										
BOD, 5 day	ND		mg/l	2.0	NA	1	06/05/15 22:45	06/10/15 17:00	30,5210B	SE
General Chemistry - Westborough Lab for sample(s): 01 Batch: WG791712-1										
Solids, Total Suspended	ND		mg/l	5.0	NA	1	-	06/08/15 19:40	30,2540D	RP
General Chemistry - Westborough Lab for sample(s): 03 Batch: WG792182-1										
Oil & Grease, Hem-Grav	ND		mg/l	4.0	--	1	06/10/15 07:45	06/10/15 08:45	74,1664A	ML

Lab Control Sample Analysis
Batch Quality Control

Project Name: NBHS IRA POTW
Project Number: 115058

Lab Number: L1512537
Report Date: 06/16/15

Parameter	LCS %Recovery	Qual	LCSD %Recovery	Qual	%Recovery Limits	RPD	Qual	RPD Limits
General Chemistry - Westborough Lab Associated sample(s): 01 Batch: WG791187-2								
BOD, 5 day	111		-		85-115	-		20
General Chemistry - Westborough Lab Associated sample(s): 03 Batch: WG791259-1								
pH	100		-		99-101	-		5
General Chemistry - Westborough Lab Associated sample(s): 03 Batch: WG792182-2								
Oil & Grease, Hem-Grav	92		-		78-114	-		18

Matrix Spike Analysis
Batch Quality Control

Project Name: NBHS IRA POTW
Project Number: 115058

Lab Number: L1512537
Report Date: 06/16/15

Parameter	Native Sample	MS Added	MS Found	MS %Recovery	Qual	MSD Found	MSD %Recovery	Qual	Recovery Limits	RPD	Qual	RPD Limits
General Chemistry - Westborough Lab Associated sample(s): 01 QC Batch ID: WG791187-4 QC Sample: L1512516-07 Client ID: MS Sample												
BOD, 5 day	4.9	100	140	134		-	-		50-145	-		35
General Chemistry - Westborough Lab Associated sample(s): 03 QC Batch ID: WG792182-4 QC Sample: L1512885-05 Client ID: MS Sample												
Oil & Grease, Hem-Grav	ND	42.1	40	96		-	-		78-114	-		18

Lab Duplicate Analysis
Batch Quality Control

Project Name: NBHS IRA POTW
Project Number: 115058

Lab Number: L1512537
Report Date: 06/16/15

Parameter	Native Sample	Duplicate Sample	Units	RPD	Qual	RPD Limits
General Chemistry - Westborough Lab Associated sample(s): 01 QC Batch ID: WG791187-3 QC Sample: L1512516-07 Client ID: DUP Sample						
BOD, 5 day	4.9	5.7	mg/l	15		35
General Chemistry - Westborough Lab Associated sample(s): 03 QC Batch ID: WG791259-2 QC Sample: L1512488-01 Client ID: DUP Sample						
pH	7.3	7.2	SU	1		5
General Chemistry - Westborough Lab Associated sample(s): 01 QC Batch ID: WG791712-2 QC Sample: L1512363-02 Client ID: DUP Sample						
Solids, Total Suspended	95	94	mg/l	1		29
General Chemistry - Westborough Lab Associated sample(s): 03 QC Batch ID: WG792182-3 QC Sample: L1512885-01 Client ID: DUP Sample						
Oil & Grease, Hem-Grav	ND	ND	mg/l	NC		18

Project Name: NBHS IRA POTW
Project Number: 115058

Lab Number: L1512537
Report Date: 06/16/15

Sample Receipt and Container Information

Were project specific reporting limits specified? YES

Reagent H2O Preserved Vials Frozen on: NA

Cooler Information Custody Seal

Cooler	
A	Absent

Container Information

Container ID	Container Type	Cooler	pH	Temp deg C	Pres	Seal	Analysis(*)
L1512537-01A	Plastic 500ml unpreserved	A	7	2.4	Y	Absent	BOD-5210(2)
L1512537-01B	Plastic 950ml unpreserved	A	7	2.4	Y	Absent	TSS-2540(7)
L1512537-01C	Amber 1000ml Na2S2O3	A	7	2.4	Y	Absent	PCB-608(7)
L1512537-01D	Amber 1000ml Na2S2O3	A	7	2.4	Y	Absent	PCB-608(7)
L1512537-02A	Vial Na2S2O3 preserved split	A	N/A	2.4	Y	Absent	624(3)
L1512537-02B	Vial Na2S2O3 preserved split	A	N/A	2.4	Y	Absent	624(3)
L1512537-02C	Vial Na2S2O3 preserved split	A	N/A	2.4	Y	Absent	624(3)
L1512537-03A	Plastic 250ml unpreserved	A	7	2.4	Y	Absent	PH-4500(.01)
L1512537-03B	Amber 1000ml HCl preserved	A	N/A	2.4	Y	Absent	OG-1664(28)
L1512537-03C	Amber 1000ml HCl preserved	A	N/A	2.4	Y	Absent	OG-1664(28)
L1512537-04A	Vial unpreserved	A	N/A	2.4	Y	Absent	COMP-VOA()
L1512537-04B	Vial unpreserved	A	N/A	2.4	Y	Absent	COMP-VOA()
L1512537-04C	Vial unpreserved	A	N/A	2.4	Y	Absent	COMP-VOA()
L1512537-04D	Vial unpreserved	A	N/A	2.4	Y	Absent	COMP-VOA()
L1512537-04E	Vial unpreserved	A	N/A	2.4	Y	Absent	COMP-VOA()
L1512537-04F	Vial unpreserved	A	N/A	2.4	Y	Absent	COMP-VOA()
L1512537-04G	Vial unpreserved	A	N/A	2.4	Y	Absent	COMP-VOA()
L1512537-04H	Vial unpreserved	A	N/A	2.4	Y	Absent	COMP-VOA()
L1512537-04I	Vial unpreserved	A	N/A	2.4	Y	Absent	COMP-VOA()
L1512537-04J	Vial unpreserved	A	N/A	2.4	Y	Absent	COMP-VOA()
L1512537-04K	Vial unpreserved	A	N/A	2.4	Y	Absent	COMP-VOA()
L1512537-04L	Vial unpreserved	A	N/A	2.4	Y	Absent	COMP-VOA()

*Values in parentheses indicate holding time in days

Project Name:	NBHS IRA POTW	**Lab Number:**	L1512537
Project Number:	115058	**Report Date:**	06/16/15

GLOSSARY

Acronyms

EDL	- Estimated Detection Limit: This value represents the level to which target analyte concentrations are reported as estimated values, when those target analyte concentrations are quantified below the reporting limit (RL). The EDL includes any adjustments from dilutions, concentrations or moisture content, where applicable. The use of EDLs is specific to the analysis of PAHs using Solid-Phase Microextraction (SPME).
EPA	- Environmental Protection Agency.
LCS	- Laboratory Control Sample: A sample matrix, free from the analytes of interest, spiked with verified known amounts of analytes or a material containing known and verified amounts of analytes.
LCSD	- Laboratory Control Sample Duplicate: Refer to LCS.
LFB	- Laboratory Fortified Blank: A sample matrix, free from the analytes of interest, spiked with verified known amounts of analytes or a material containing known and verified amounts of analytes.
MDL	- Method Detection Limit: This value represents the level to which target analyte concentrations are reported as estimated values, when those target analyte concentrations are quantified below the reporting limit (RL). The MDL includes any adjustments from dilutions, concentrations or moisture content, where applicable.
MS	- Matrix Spike Sample: A sample prepared by adding a known mass of target analyte to a specified amount of matrix sample for which an independent estimate of target analyte concentration is available.
MSD	- Matrix Spike Sample Duplicate: Refer to MS.
NA	- Not Applicable.
NC	- Not Calculated: Term is utilized when one or more of the results utilized in the calculation are non-detect at the parameter's reporting unit.
NI	- Not Ignitable.
NP	- Non-Plastic: Term is utilized for the analysis of Atterberg Limits in soil.
RL	- Reporting Limit: The value at which an instrument can accurately measure an analyte at a specific concentration. The RL includes any adjustments from dilutions, concentrations or moisture content, where applicable.
RPD	- Relative Percent Difference: The results from matrix and/or matrix spike duplicates are primarily designed to assess the precision of analytical results in a given matrix and are expressed as relative percent difference (RPD). Values which are less than five times the reporting limit for any individual parameter are evaluated by utilizing the absolute difference between the values; although the RPD value will be provided in the report.
SRM	- Standard Reference Material: A reference sample of a known or certified value that is of the same or similar matrix as the associated field samples.

Footnotes

1	- The reference for this analyte should be considered modified since this analyte is absent from the target analyte list of the original method.

Terms

Total: With respect to Organic analyses, a 'Total' result is defined as the summation of results for individual isomers or Aroclors. If a 'Total' result is requested, the results of its individual components will also be reported. This is applicable to 'Total' results for methods 8260, 8081 and 8082.

Analytical Method: Both the document from which the method originates and the analytical reference method. (Example: EPA 8260B is shown as 1,8260B.) The codes for the reference method documents are provided in the References section of the Addendum.

Data Qualifiers

A	- Spectra identified as "Aldol Condensation Product".
B	- The analyte was detected above the reporting limit in the associated method blank. Flag only applies to associated field samples that have detectable concentrations of the analyte at less than ten times (10x) the concentration found in the blank. For MCP-related projects, flag only applies to associated field samples that have detectable concentrations of the analyte at less than ten times (10x) the concentration found in the blank. For DOD-related projects, flag only applies to associated field samples that have detectable concentrations of the analyte at less than ten times (10x) the concentration found in the blank AND the analyte was detected above one-half the reporting limit (or above the reporting limit for common lab contaminants) in the associated method blank. For NJ-Air-related projects, flag only applies to associated field samples that have detectable concentrations of the analyte above the reporting limit. For NJ-related projects (excluding Air), flag only applies to associated field samples that have detectable concentrations of the analyte, which was detected above the reporting limit in the associated method blank or above five times the reporting limit for common lab contaminants (Phthalates, Acetone, Methylene Chloride, 2-Butanone).
C	- Co-elution: The target analyte co-elutes with a known lab standard (i.e. surrogate, internal standards, etc.) for co-extracted analyses.
D	- Concentration of analyte was quantified from diluted analysis. Flag only applies to field samples that have detectable concentrations of the analyte.

Report Format: Data Usability Report

Project Name:	NBHS IRA POTW	**Lab Number:**	L1512537
Project Number:	115058	**Report Date:**	06/16/15

Data Qualifiers

E - Concentration of analyte exceeds the range of the calibration curve and/or linear range of the instrument.

G - The concentration may be biased high due to matrix interferences (i.e, co-elution) with non-target compound(s). The result should be considered estimated.

H - The analysis of pH was performed beyond the regulatory-required holding time of 15 minutes from the time of sample collection.

I - The lower value for the two columns has been reported due to obvious interference.

M - Reporting Limit (RL) exceeds the MCP CAM Reporting Limit for this analyte.

NJ - Presumptive evidence of compound. This represents an estimated concentration for Tentatively Identified Compounds (TICs), where the identification is based on a mass spectral library search.

P - The RPD between the results for the two columns exceeds the method-specified criteria.

Q - The quality control sample exceeds the associated acceptance criteria. For DOD-related projects, LCS and/or Continuing Calibration Standard exceedences are also qualified on all associated sample results. Note: This flag is not applicable for matrix spike recoveries when the sample concentration is greater than 4x the spike added or for batch duplicate RPD when the sample concentrations are less than 5x the RL. (Metals only.)

R - Analytical results are from sample re-analysis.

RE - Analytical results are from sample re-extraction.

S - Analytical results are from modified screening analysis.

J - Estimated value. This represents an estimated concentration for Tentatively Identified Compounds (TICs).

ND - Not detected at the reporting limit (RL) for the sample.

Report Format: Data Usability Report

Project Name: NBHS IRA POTW **Lab Number:** L1512537
Project Number: 115058 **Report Date:** 06/16/15

REFERENCES

5 Methods for the Organic Chemical Analysis of Municipal and Industrial Wastewater. Appendix A, Part 136, 40 CFR (Code of Federal Regulations).

30 Standard Methods for the Examination of Water and Wastewater. APHA-AWWA-WPCF. 18th Edition. 1992.

74 Method 1664,Revision A: N-Hexane Extractable Material (HEM; Oil & Grease) and Silica Gel Treated N-Hexane Extractable Material (SGT-HEM; Non-polar Material) by Extraction and Gravimetry, EPA-821-R-98-002, February 1999.

LIMITATION OF LIABILITIES

Alpha Analytical performs services with reasonable care and diligence normal to the analytical testing laboratory industry. In the event of an error, the sole and exclusive responsibility of Alpha Analytical shall be to re-perform the work at it's own expense. In no event shall Alpha Analytical be held liable for any incidental, consequential or special damages, including but not limited to, damages in any way connected with the use of, interpretation of, information or analysis provided by Alpha Analytical.

We strongly urge our clients to comply with EPA protocol regarding sample volume, preservation, cooling, containers, sampling procedures, holding time and splitting of samples in the field.

Certification Information

Last revised December 16, 2014

The following analytes are not included in our NELAP Scope of Accreditation:

Westborough Facility
EPA 524.2: Acetone, 2-Butanone (Methyl ethyl ketone (MEK)), Tert-butyl alcohol, 2-Hexanone, Tetrahydrofuran, 1,3,5-Trichlorobenzene, 4-Methyl-2-pentanone (MIBK), Carbon disulfide, Diethyl ether.
EPA 8260C: 1,2,4,5-Tetramethylbenzene, 4-Ethyltoluene, Iodomethane (methyl iodide), Methyl methacrylate, Azobenzene.
EPA 8270D: 1-Methylnaphthalene, Dimethylnaphthalene,1,4-Diphenylhydrazine.
EPA 625: 4-Chloroaniline, 4-Methylphenol.
SM4500: Soil: Total Phosphorus, TKN, NO2, NO3.
EPA 9071: Total Petroleum Hydrocarbons, Oil & Grease.

Mansfield Facility
EPA 8270D: Biphenyl.
EPA 2540D: TSS
EPA TO-15: Halothane, 2,4,4-Trimethyl-2-pentene, 2,4,4-Trimethyl-1-pentene, Thiophene, 2-Methylthiophene, 3-Methylthiophene, 2-Ethylthiophene, 1,2,3-Trimethylbenzene, Indan, Indene, 1,2,4,5-Tetramethylbenzene, Benzothiophene, 1-Methylnaphthalene.

The following analytes are included in our Massachusetts DEP Scope of Accreditation, Westborough Facility:

Drinking Water
EPA 200.8: Sb,As,Ba,Be,Cd,Cr,Cu,Pb,Ni,Se,Tl; **EPA 200.7**: Ba,Be,Ca,Cd,Cr,Cu,Na; **EPA 245.1:** Mercury;
EPA 300.0: Nitrate-N, Fluoride, Sulfate; **EPA 353.2**: Nitrate-N, Nitrite-N; **SM4500NO3-F**: Nitrate-N, Nitrite-N; **SM4500F-C, SM4500CN-CE, EPA 180.1, SM2130B, SM4500Cl-D, SM2320B, SM2540C, SM4500H-B**
EPA 332: Perchlorate.
Microbiology: **SM9215B; SM9223-P/A, SM9223B-Colilert-QT, Enterolert-QT.**

Non-Potable Water
EPA 200.8: Al,Sb,As,Be,Cd,Cr,Cu,Pb,Mn,Ni,Se,Ag,Tl,Zn;
EPA 200.7: Al,Sb,As,Be,Cd,Ca,Cr,Co,Cu,Fe,Pb,Mg,Mn,Mo,Ni,K,Se,Ag,Na,Sr,Ti,Tl,V,Zn;
EPA 245.1, SM4500H,B, EPA 120.1, SM2510B, SM2540C, SM2340B, SM2320B, SM4500CL-E, SM4500F-BC, SM426C, SM4500NH3-BH, **EPA 350.1**: Ammonia-N, **LACHAT 10-107-06-1-B**: Ammonia-N, **SM4500NO3-F,**
EPA 353.2: Nitrate-N**, SM4500NH3-BC-NES, EPA 351.1, SM4500P-E, SM4500P-B, E, SM5220D, EPA 410.4, SM5210B, SM5310C, SM4500CL-D, EPA 1664, SM14 510AC, EPA 420.1, SM4500-CN-CE, SM2540D.**
EPA 624: Volatile Halocarbons & Aromatics,
EPA 608: Chlordane, Toxaphene, Aldrin, alpha-BHC, beta-BHC, gamma-BHC, delta-BHC, Dieldrin, DDD, DDE, DDT, Endosulfan I, Endosulfan II, Endosulfan sulfate, Endrin, Endrin Aldehyde, Heptachlor, Heptachlor Epoxide, PCBs
EPA 625: SVOC (Acid/Base/Neutral Extractables), **EPA 600/4-81-045**: PCB-Oil.
Microbiology: **SM9223B-Colilert-QT; Enterolert-QT, SM9222D-MF**.

For a complete listing of analytes and methods, please contact your Alpha Project Manager.

CHAIN OF CUSTODY

PAGE 1 OF 1

Date Rec'd in Lab: 6/5/15

ALPHA Job #: L1512537

ALPHA ANALYTICAL
WESTBORO, MA TEL: 508-898-9220 FAX: 508-898-9193
MANSFIELD, MA TEL: 508-822-9300 FAX: 508-822-3288

Client Information

Client: TRC
Address: 650 SUFFOLK ST
LOWELL MA
Phone: 978-970-5600
Fax:
Email: DSULLIVAN@TRCSOLUTIONS.COM
☐ These samples have been previously analyzed by Alpha

Project Information

Project Name: NBHS IRA POTW
Project Location: NEW BEDFORD MA
Project #: 115058
Project Manager: DAVID SULLIVAN
ALPHA Quote #:

Turn-Around Time

☑ Standard ☐ RUSH (only confirmed if pre-approved!)
Date Due: Time:

Report Information - Data Deliverables

☐ FAX ☑ EMAIL
☑ ADEx ☐ Add'l Deliverables

Billing Information

☐ Same as Client info PO #: C115058

Regulatory Requirements/Report Limits

State /Fed Program | Criteria

MA MCP PRESUMPTIVE CERTAINTY --- CT REASONABLE CONFIDENCE PROTO

☐ Yes ☐ No Are MCP Analytical Methods Required?
☐ Yes ☐ No Is Matrix Spike (MS) Required on this SDG? (If yes see note in Comments)
☐ Yes ☐ No Are CT RCP (Reasonable Confidence Protocols) Required?

Other Project Specific Requirements/Comments/Detection Limits:

If MS is required , indicate in Sample Specific Comments which samples and what tests MS to be performed.
(Note: All ***CAM*** methods for inorganic analyses require MS every 20 soil samples)

ALPHA Lab ID (Lab Use Only)	Sample ID	Collection Date	Collection Time	Sample Matrix	Sampler's Initials	TSS 2540	PCBs 608	BOD 5210	VOCs 624	pH 4500	OIL + GREASE 1664	Sample Specific Comments	Total # Bottles
L2537-01	EFFLUENT (COMP)	6/4 6/5/15		E	JF	✓	✓	✓					
-02	EFFLUENT (1-4)	6/4/15 6/5/15	(7:30 13:30 21:30 6:30)	E	JF				✓			LAB COMPOSITE.	
-03	EFFLUENT (GRAB)	6/5/15	6:30	E	JF					✓	✓		

SAMPLE HANDLING
Filtration
☐ Done
☐ Not needed
☐ Lab to do
Preservation
☐ Lab to do
(Please specify below)

Container Type	P	A	P	A	P	A
Preservative	A	B	A	H	A	B

PLEASE ANSWER QUESTIONS ABOVE!

IS YOUR PROJECT MA MCP *or* CT RCP?

Relinquished By:	Date/Time	Received By:	Date/Time
Jason C. Fiero	6/5/15		6/5/15 17:30
	6/5/15 1910		6/5/15 1910
	6/5/15 1959		6/5/15 1959

Please print clearly, legibly and completely. Samples can not be logged in and turnaround time clock will not start until any ambiguities are resolved. All samples submitted are subject to Alpha's Terms and Conditions. See reverse side.

FORM NO: 01-01 (rev. 18-Jan-2010)

ANALYTICAL REPORT

Lab Number:	L1522736
Client:	TRC Environmental Consultants Wannalancit Mills 650 Suffolk Street Lowell, MA 01854
ATTN:	David Sullivan
Phone:	(978) 656-3565
Project Name:	NBHS IRA POTW
Project Number:	115058
Report Date:	09/29/15

The original project report/data package is held by Alpha Analytical. This report/data package is paginated and should be reproduced only in its entirety. Alpha Analytical holds no responsibility for results and/or data that are not consistent with the original.

Certifications & Approvals: MA (M-MA086), NY (11148), CT (PH-0574), NH (2003), NJ NELAP (MA935), RI (LAO00065), ME (MA00086), PA (68-03671), VA (460195), MD (348), IL (200077), NC (666), TX (T104704476), DOD (L2217), USDA (Permit #P-330-11-00240).

Eight Walkup Drive, Westborough, MA 01581-1019
508-898-9220 (Fax) 508-898-9193 800-624-9220 - www.alphalab.com

Project Name: NBHS IRA POTW
Project Number: 115058

Lab Number: L1522736
Report Date: 09/29/15

Alpha Sample ID	Client ID	Matrix	Sample Location	Collection Date/Time	Receive Date
L1522736-01	EFFLUENT (COMP)	WATER	NEW BEDFORD, MA	09/15/15 06:30	09/15/15
L1522736-02	EFFLUENT (1-4)	WATER	NEW BEDFORD, MA	09/15/15 06:30	09/15/15
L1522736-03	EFFLUENT (GRAB)	WATER	NEW BEDFORD, MA	09/15/15 06:30	09/15/15
L1522736-04	COMPOSITE EFFLUENT 1 OF 4, 2 OF 4, 3 OF 4, 4 OF 4	WATER	NEW BEDFORD, MA	09/15/15 06:30	09/15/15

Project Name: NBHS IRA POTW **Lab Number:** L1522736
Project Number: 115058 **Report Date:** 09/29/15

Case Narrative

The samples were received in accordance with the Chain of Custody and no significant deviations were encountered during the preparation or analysis unless otherwise noted. Sample Receipt, Container Information, and the Chain of Custody are located at the back of the report.

Results contained within this report relate only to the samples submitted under this Alpha Lab Number and meet all of the requirements of NELAC, for all NELAC accredited parameters. The data presented in this report is organized by parameter (i.e. VOC, SVOC, etc.). Sample specific Quality Control data (i.e. Surrogate Spike Recovery) is reported at the end of the target analyte list for each individual sample, followed by the Laboratory Batch Quality Control at the end of each parameter. Tentatively Identified Compounds (TICs), if requested, are reported for compounds identified to be present and are not part of the method/program Target Compound List, even if only a subset of the TCL are being reported. If a sample was re-analyzed or re-extracted due to a required quality control corrective action and if both sets of data are reported, the Laboratory ID of the re-analysis or re-extraction is designated with an "R" or "RE", respectively. When multiple Batch Quality Control elements are reported (e.g. more than one LCS), the associated samples for each element are noted in the grey shaded header line of each data table. Any Laboratory Batch, Sample Specific % recovery or RPD value that is outside the listed Acceptance Criteria is bolded in the report. All specific QC information is also incorporated in the Data Usability format of our Data Merger tool where it can be reviewed along with any associated usability implications. Soil/sediments, solids and tissues are reported on a dry weight basis unless otherwise noted. Definitions of all data qualifiers and acronyms used in this report are provided in the Glossary located at the back of the report.

In reference to questions H (CAM) or 4 (RCP) when "NO" is checked, the performance criteria for CAM and RCP methods allow for some quality control failures to occur and still be within method compliance. In these instances the specific failure is not narrated but noted in the associated QC table. The information is also incorporated in the Data Usability format of our Data Merger tool where it can be reviewed along with any associated usability implications.

Please see the associated ADEx data file for a comparison of laboratory reporting limits that were achieved with the regulatory Numerical Standards requested on the Chain of Custody.

HOLD POLICY
For samples submitted on hold, Alpha's policy is to hold samples (with the exception of Air canisters) free of charge for 21 calendar days from the date the project is completed. After 21 calendar days, we will dispose of all samples submitted including those put on hold unless you have contacted your Client Service Representative and made arrangements for Alpha to continue to hold the samples. Air canisters will be disposed after 3 business days from the date the project is completed.

Please contact Client Services at 800-624-9220 with any questions.

Project Name: NBHS IRA POTW **Lab Number:** L1522736
Project Number: 115058 **Report Date:** 09/29/15

Case Narrative (continued)

Volatile Organics by Method 624

The WG822272-5 LCS recoveries, associated with L1522736-02, are above the acceptance criteria for carbon tetrachloride (154%); however, the associated samples are non-detect for these target analytes. The results of the original analysis are reported.

The WG822272-5 LCS recoveries for methylene chloride (113%), chloroform (117%), 1,2-dichloropropane (118%), 1,2-dichloroethane (111%), 1,1,1-trichloroethane (123%), 1,1-dichloroethene (122%), and cis-1,2-dichloroethene (118%), associated with L1522736-02, are outside Alpha's acceptance criteria, but within the acceptance criteria specified in the method.

PCBs

The surrogate recoveries for L1522736-01 and WG823537 Blank/LCS/LCSD were outside the acceptance criteria for 2,4,5,6-tetrachloro-m-xylene and decachlorobiphenyl (all at 0%); however, the criteria were achieved upon re-extraction outside of holding time. The results of both extractions are reported.

WG825182: An LCS/LCSD was performed in lieu of a Matrix Spike and Laboratory Duplicate due to insufficient sample volume available for analysis.

WG823537: A Matrix Spike was prepared with the sample batch, however, the native sample was not available for reporting; therefore, the matrix spike results could not be reported.

BOD, 5 day

The WG821718-2 LCS recovery (120%), associated with L1522736-01, is outside the acceptance criteria. Due to the expiration of the method required holding time, no further action was taken.

The WG821718-4 MS recovery (148%), performed on L1522736-01, is above the acceptance criteria for BOD. However, due to expired sample holdtime, reanalysis is invalid.

I, the undersigned, attest under the pains and penalties of perjury that, to the best of my knowledge and belief and based upon my personal inquiry of those responsible for providing the information contained in this analytical report, such information is accurate and complete. This certificate of analysis is not complete unless this page accompanies any and all pages of this report.

Authorized Signature: Cristin Walker

Title: Technical Director/Representative Date: 09/29/15

ORGANICS

VOLATILES

Project Name: NBHS IRA POTW **Lab Number:** L1522736

Project Number: 115058 **Report Date:** 09/29/15

SAMPLE RESULTS

Lab ID:	L1522736-02	Date Collected:	09/15/15 06:30
Client ID:	EFFLUENT (1-4)	Date Received:	09/15/15
Sample Location:	NEW BEDFORD, MA	Field Prep:	Not Specified
Matrix:	Water		
Analytical Method:	5,624		
Analytical Date:	09/17/15 16:17		
Analyst:	GT		

Parameter	Result	Qualifier	Units	RL	MDL	Dilution Factor
Volatile Organics by GC/MS - Westborough Lab						
Methylene chloride	ND		ug/l	5.0	--	1
1,1-Dichloroethane	ND		ug/l	1.5	--	1
Chloroform	ND		ug/l	1.5	--	1
Carbon tetrachloride	ND		ug/l	1.0	--	1
1,2-Dichloropropane	ND		ug/l	3.5	--	1
Dibromochloromethane	ND		ug/l	1.0	--	1
1,1,2-Trichloroethane	ND		ug/l	1.5	--	1
2-Chloroethylvinyl ether	ND		ug/l	10	--	1
Tetrachloroethene	ND		ug/l	1.5	--	1
Chlorobenzene	ND		ug/l	3.5	--	1
Trichlorofluoromethane	ND		ug/l	5.0	--	1
1,2-Dichloroethane	ND		ug/l	1.5	--	1
1,1,1-Trichloroethane	ND		ug/l	2.0	--	1
Bromodichloromethane	ND		ug/l	1.0	--	1
trans-1,3-Dichloropropene	ND		ug/l	1.5	--	1
cis-1,3-Dichloropropene	ND		ug/l	1.5	--	1
Bromoform	ND		ug/l	1.0	--	1
1,1,2,2-Tetrachloroethane	ND		ug/l	1.0	--	1
Benzene	ND		ug/l	1.0	--	1
Toluene	ND		ug/l	1.0	--	1
Ethylbenzene	ND		ug/l	1.0	--	1
Chloromethane	ND		ug/l	5.0	--	1
Bromomethane	ND		ug/l	5.0	--	1
Vinyl chloride	ND		ug/l	1.0	--	1
Chloroethane	ND		ug/l	2.0	--	1
1,1-Dichloroethene	ND		ug/l	1.0	--	1
trans-1,2-Dichloroethene	25		ug/l	1.5	--	1
cis-1,2-Dichloroethene[1]	28		ug/l	1.0	--	1
Trichloroethene	ND		ug/l	1.0	--	1
1,2-Dichlorobenzene	ND		ug/l	5.0	--	1

Project Name: NBHS IRA POTW **Lab Number:** L1522736

Project Number: 115058 **Report Date:** 09/29/15

SAMPLE RESULTS

Lab ID: L1522736-02 Date Collected: 09/15/15 06:30

Client ID: EFFLUENT (1-4) Date Received: 09/15/15

Sample Location: NEW BEDFORD, MA Field Prep: Not Specified

Parameter	Result	Qualifier	Units	RL	MDL	Dilution Factor
Volatile Organics by GC/MS - Westborough Lab						
1,3-Dichlorobenzene	ND		ug/l	5.0	--	1
1,4-Dichlorobenzene	ND		ug/l	5.0	--	1
p/m-Xylene[1]	ND		ug/l	2.0	--	1
o-xylene[1]	ND		ug/l	1.0	--	1
Xylenes, Total[1]	ND		ug/l	1.0	--	1
Styrene[1]	ND		ug/l	1.0	--	1
Acetone[1]	ND		ug/l	10	--	1
Carbon disulfide[1]	ND		ug/l	5.0	--	1
2-Butanone[1]	ND		ug/l	10	--	1
Vinyl acetate[1]	ND		ug/l	10	--	1
4-Methyl-2-pentanone[1]	ND		ug/l	10	--	1
2-Hexanone[1]	ND		ug/l	10	--	1
Acrolein[1]	ND		ug/l	8.0	--	1
Acrylonitrile[1]	ND		ug/l	10	--	1
Dibromomethane[1]	ND		ug/l	1.0	--	1

Surrogate	% Recovery	Qualifier	Acceptance Criteria
Pentafluorobenzene	111		80-120
Fluorobenzene	110		80-120
4-Bromofluorobenzene	98		80-120

Project Name: NBHS IRA POTW **Lab Number:** L1522736

Project Number: 115058 **Report Date:** 09/29/15

Method Blank Analysis
Batch Quality Control

Analytical Method: 5,624
Analytical Date: 09/17/15 12:17
Analyst: GT

Parameter	Result	Qualifier	Units	RL	MDL
Volatile Organics by GC/MS - Westborough Lab for sample(s): 02 Batch: WG822272-6					
Methylene chloride	ND		ug/l	5.0	--
1,1-Dichloroethane	ND		ug/l	1.5	--
Chloroform	ND		ug/l	1.5	--
Carbon tetrachloride	ND		ug/l	1.0	--
1,2-Dichloropropane	ND		ug/l	3.5	--
Dibromochloromethane	ND		ug/l	1.0	--
1,1,2-Trichloroethane	ND		ug/l	1.5	--
2-Chloroethylvinyl ether	ND		ug/l	10	--
Tetrachloroethene	ND		ug/l	1.5	--
Chlorobenzene	ND		ug/l	3.5	--
Trichlorofluoromethane	ND		ug/l	5.0	--
1,2-Dichloroethane	ND		ug/l	1.5	--
1,1,1-Trichloroethane	ND		ug/l	2.0	--
Bromodichloromethane	ND		ug/l	1.0	--
trans-1,3-Dichloropropene	ND		ug/l	1.5	--
cis-1,3-Dichloropropene	ND		ug/l	1.5	--
Bromoform	ND		ug/l	1.0	--
1,1,2,2-Tetrachloroethane	ND		ug/l	1.0	--
Benzene	ND		ug/l	1.0	--
Toluene	ND		ug/l	1.0	--
Ethylbenzene	ND		ug/l	1.0	--
Chloromethane	ND		ug/l	5.0	--
Bromomethane	ND		ug/l	5.0	--
Vinyl chloride	ND		ug/l	1.0	--
Chloroethane	ND		ug/l	2.0	--
1,1-Dichloroethene	ND		ug/l	1.0	--
trans-1,2-Dichloroethene	ND		ug/l	1.5	--
cis-1,2-Dichloroethene[1]	ND		ug/l	1.0	--
Trichloroethene	ND		ug/l	1.0	--

Project Name: NBHS IRA POTW **Lab Number:** L1522736

Project Number: 115058 **Report Date:** 09/29/15

Method Blank Analysis
Batch Quality Control

Analytical Method: 5,624
Analytical Date: 09/17/15 12:17
Analyst: GT

Parameter	Result	Qualifier	Units	RL	MDL
Volatile Organics by GC/MS - Westborough Lab for sample(s): 02 Batch: WG822272-6					
1,2-Dichlorobenzene	ND		ug/l	5.0	--
1,3-Dichlorobenzene	ND		ug/l	5.0	--
1,4-Dichlorobenzene	ND		ug/l	5.0	--
p/m-Xylene[1]	ND		ug/l	2.0	--
o-xylene[1]	ND		ug/l	1.0	--
Xylenes, Total[1]	ND		ug/l	1.0	--
Styrene[1]	ND		ug/l	1.0	--
Acetone[1]	ND		ug/l	10	--
Carbon disulfide[1]	ND		ug/l	5.0	--
2-Butanone[1]	ND		ug/l	10	--
Vinyl acetate[1]	ND		ug/l	10	--
4-Methyl-2-pentanone[1]	ND		ug/l	10	--
2-Hexanone[1]	ND		ug/l	10	--
Acrolein[1]	ND		ug/l	8.0	--
Acrylonitrile[1]	ND		ug/l	10	--
Methyl tert butyl ether[1]	ND		ug/l	10	--
Dibromomethane[1]	ND		ug/l	1.0	--
1,4-Dioxane[1]	ND		ug/l	2000	--
Tert-Butyl Alcohol[1]	ND		ug/l	100	--
Tertiary-Amyl Methyl Ether[1]	ND		ug/l	20	--
Dichlorodifluoromethane[1]	ND		ug/l	1.0	--

Surrogate	%Recovery	Qualifier	Acceptance Criteria
Pentafluorobenzene	107		80-120
Fluorobenzene	104		80-120
4-Bromofluorobenzene	99		80-120

Lab Control Sample Analysis
Batch Quality Control

Project Name: NBHS IRA POTW
Project Number: 115058

Lab Number: L1522736
Report Date: 09/29/15

Parameter	LCS %Recovery	Qual	LCSD %Recovery	Qual	%Recovery Limits	RPD	Qual	RPD Limits
Volatile Organics by GC/MS - Westborough Lab Associated sample(s): 02 Batch: WG822272-5								
Methylene chloride	**113**	Q	-		70-111	-		30
1,1-Dichloroethane	111		-		78-116	-		30
Chloroform	**117**	Q	-		86-111	-		30
Carbon tetrachloride	**154**	Q	-		60-112	-		30
1,2-Dichloropropane	**118**	Q	-		83-113	-		30
Dibromochloromethane	113		-		58-129	-		30
1,1,2-Trichloroethane	89		-		80-118	-		30
2-Chloroethylvinyl ether	96		-		69-124	-		30
Tetrachloroethene	87		-		80-126	-		30
Chlorobenzene	97		-		80-126	-		30
Trichlorofluoromethane	118		-		83-128	-		30
1,2-Dichloroethane	**111**	Q	-		82-110	-		30
1,1,1-Trichloroethane	**123**	Q	-		72-109	-		30
Bromodichloromethane	108		-		71-120	-		30
trans-1,3-Dichloropropene	100		-		73-106	-		30
cis-1,3-Dichloropropene	94		-		78-111	-		30
Bromoform	123		-		45-131	-		30
1,1,2,2-Tetrachloroethane	105		-		81-122	-		30
Benzene	116		-		84-116	-		30
Toluene	87		-		83-121	-		30
Ethylbenzene	101		-		84-123	-		30

Lab Control Sample Analysis
Batch Quality Control

Project Name: NBHS IRA POTW
Project Number: 115058

Lab Number: L1522736
Report Date: 09/29/15

Parameter	LCS %Recovery	Qual	LCSD %Recovery	Qual	%Recovery Limits	RPD	Qual	RPD Limits
Volatile Organics by GC/MS - Westborough Lab Associated sample(s): 02 Batch: WG822272-5								
Chloromethane	105		-		70-144	-		30
Bromomethane	111		-		63-141	-		30
Vinyl chloride	116		-		56-118	-		30
Chloroethane	117		-		74-130	-		30
1,1-Dichloroethene	**122**	Q	-		77-116	-		30
trans-1,2-Dichloroethene	117		-		81-121	-		30
cis-1,2-Dichloroethene[1]	**118**	Q	-		85-110	-		30
Trichloroethene	114		-		84-118	-		30
1,2-Dichlorobenzene	99		-		78-128	-		30
1,3-Dichlorobenzene	94		-		77-125	-		30
1,4-Dichlorobenzene	94		-		77-125	-		30
p/m-Xylene[1]	105		-		81-121	-		30
o-Xylene[1]	102		-		81-124	-		30
Styrene[1]	104		-		84-133	-		30
Acetone[1]	116		-		40-160	-		30
Carbon disulfide[1]	132		-		54-134	-		30
2-Butanone[1]	110		-		57-116	-		30
Vinyl acetate[1]	124		-		40-160	-		30
4-Methyl-2-pentanone[1]	89		-		79-125	-		30
2-Hexanone[1]	83		-		78-120	-		30
Acrolein[1]	114		-		40-160	-		30

Lab Control Sample Analysis
Batch Quality Control

Project Name: NBHS IRA POTW
Project Number: 115058

Lab Number: L1522736
Report Date: 09/29/15

Parameter	LCS %Recovery	Qual	LCSD %Recovery	Qual	%Recovery Limits	RPD	Qual	RPD Limits
Volatile Organics by GC/MS - Westborough Lab Associated sample(s): 02 Batch: WG822272-5								
Acrylonitrile[1]	113		-		66-123	-		30
Methyl tert butyl ether[1]	74		-		57-126	-		30
Dibromomethane[1]	118		-		65-126	-		30
1,4-Dioxane[1]	107		-		74-121	-		30
tert-Butyl Alcohol[1]	64		-		52-114	-		30
Tertiary-Amyl Methyl Ether[1]	**126**	Q	-		66-111	-		30

Surrogate	LCS %Recovery	Qual	LCSD %Recovery	Qual	Acceptance Criteria
Pentafluorobenzene	111				80-120
Fluorobenzene	113				80-120
4-Bromofluorobenzene	105				80-120

Matrix Spike Analysis
Batch Quality Control

Project Name: NBHS IRA POTW
Project Number: 115058

Lab Number: L1522736
Report Date: 09/29/15

Parameter	Native Sample	MS Added	MS Found	MS %Recovery	Qual	MSD Found	MSD %Recovery	Qual	Recovery Limits	RPD	Qual	RPD Limits
Volatile Organics by GC/MS - Westborough Lab Associated sample(s): 02 QC Batch ID: WG822272-4 QC Sample: L1522728-02 Client ID: MS Sample												
Methylene chloride	ND	200	210	104		-	-		70-111	-		30
1,1-Dichloroethane	ND	200	200	102		-	-		78-116	-		30
Chloroform	ND	200	230	**113**	Q	-	-		86-111	-		30
Carbon tetrachloride	ND	200	270	**137**	Q	-	-		60-112	-		30
1,2-Dichloropropane	ND	200	220	113		-	-		83-113	-		30
Dibromochloromethane	ND	200	210	107		-	-		58-129	-		30
1,1,2-Trichloroethane	ND	200	180	89		-	-		80-118	-		30
2-Chloroethylvinyl ether	ND	200	210	107		-	-		69-124	-		30
Tetrachloroethene	ND	200	170	86		-	-		80-126	-		30
Chlorobenzene	ND	200	200	99		-	-		80-126	-		30
Trichlorofluoromethane	ND	200	200	98		-	-		83-128	-		30
1,2-Dichloroethane	ND	200	220	108		-	-		82-110	-		30
1,1,1-Trichloroethane	ND	200	230	**113**	Q	-	-		72-109	-		30
Bromodichloromethane	ND	200	220	109		-	-		71-120	-		30
trans-1,3-Dichloropropene	ND	200	160	83		-	-		73-106	-		30
cis-1,3-Dichloropropene	ND	200	160	78		-	-		78-111	-		30
Bromoform	ND	200	230	116		-	-		45-131	-		30
1,1,2,2-Tetrachloroethane	ND	200	200	100		-	-		81-122	-		30
Benzene	ND	200	220	110		-	-		84-116	-		30
Toluene	ND	200	170	86		-	-		83-121	-		30
Ethylbenzene	ND	200	210	104		-	-		84-123	-		30

Matrix Spike Analysis
Batch Quality Control

Project Name: NBHS IRA POTW
Project Number: 115058

Lab Number: L1522736
Report Date: 09/29/15

Parameter	Native Sample	MS Added	MS Found	MS %Recovery	Qual	MSD Found	MSD %Recovery	Qual	Recovery Limits	RPD	Qual	RPD Limits
Volatile Organics by GC/MS - Westborough Lab Associated sample(s): 02 QC Batch ID: WG822272-4 QC Sample: L1522728-02 Client ID: MS Sample												
Chloromethane	ND	200	140	**68**	Q	-	-		70-144	-		30
Bromomethane	ND	200	120	**61**	Q	-	-		63-141	-		30
Vinyl chloride	ND	200	170	83		-	-		56-118	-		30
Chloroethane	ND	200	190	97		-	-		74-130	-		30
1,1-Dichloroethene	ND	200	210	107		-	-		77-116	-		30
trans-1,2-Dichloroethene	ND	200	220	108		-	-		81-121	-		30
cis-1,2-Dichloroethene[1]	ND	200	240	**119**	Q	-	-		85-110	-		30
Trichloroethene	ND	200	220	113		-	-		84-118	-		30
1,2-Dichlorobenzene	ND	200	190	95		-	-		78-128	-		30
1,3-Dichlorobenzene	ND	200	190	94		-	-		77-125	-		30
1,4-Dichlorobenzene	ND	200	190	95		-	-		77-125	-		30
p/m-Xylene[1]	ND	400	440	110		-	-		81-121	-		30
o-Xylene[1]	ND	200	220	108		-	-		81-124	-		30
Styrene[1]	ND	200	220	109		-	-		84-133	-		30
Acetone[1]	ND	500	610	122		-	-		40-160	-		30
Carbon disulfide[1]	ND	200	260	130		-	-		54-134	-		30
2-Butanone[1]	ND	500	530	106		-	-		57-116	-		30
Vinyl acetate[1]	ND	400	370	92		-	-		40-160	-		30
4-Methyl-2-pentanone[1]	ND	500	480	96		-	-		79-125	-		30
2-Hexanone[1]	ND	500	440	87		-	-		78-120	-		30
Acrolein[1]	ND	400	ND	**0**	Q	-	-		40-160	-		30

Matrix Spike Analysis
Batch Quality Control

Project Name: NBHS IRA POTW
Project Number: 115058

Lab Number: L1522736
Report Date: 09/29/15

Parameter	Native Sample	MS Added	MS Found	MS %Recovery	Qual	MSD Found	MSD %Recovery	Qual	Recovery Limits	RPD	Qual	RPD Limits
Volatile Organics by GC/MS - Westborough Lab Associated sample(s): 02 QC Batch ID: WG822272-4 QC Sample: L1522728-02 Client ID: MS Sample												
Acrylonitrile[1]	ND	400	450	113		-	-		66-123	-		30
Dibromomethane[1]	ND	200	240	120		-	-		65-126	-		30

Surrogate	MS % Recovery	MS Qualifier	MSD % Recovery	MSD Qualifier	Acceptance Criteria
4-Bromofluorobenzene	106				80-120
Fluorobenzene	108				80-120
Pentafluorobenzene	106				80-120

Lab Duplicate Analysis
Batch Quality Control

Project Name: NBHS IRA POTW
Project Number: 115058

Lab Number: L1522736
Report Date: 09/29/15

Parameter	Native Sample	Duplicate Sample	Units	RPD	Qual	RPD Limits
Volatile Organics by GC/MS - Westborough Lab Associated sample(s): 02 QC Batch ID: WG822272-3 QC Sample: L1522728-02 Client ID: DUP Sample						
Methylene chloride	ND	ND	ug/l	NC		30
1,1-Dichloroethane	ND	ND	ug/l	NC		30
Chloroform	ND	ND	ug/l	NC		30
Carbon tetrachloride	ND	ND	ug/l	NC		30
1,2-Dichloropropane	ND	ND	ug/l	NC		30
Dibromochloromethane	ND	ND	ug/l	NC		30
1,1,2-Trichloroethane	ND	ND	ug/l	NC		30
2-Chloroethylvinyl ether	ND	ND	ug/l	NC		30
Tetrachloroethene	ND	ND	ug/l	NC		30
Chlorobenzene	ND	ND	ug/l	NC		30
Trichlorofluoromethane	ND	ND	ug/l	NC		30
1,2-Dichloroethane	ND	ND	ug/l	NC		30
1,1,1-Trichloroethane	ND	ND	ug/l	NC		30
Bromodichloromethane	ND	ND	ug/l	NC		30
trans-1,3-Dichloropropene	ND	ND	ug/l	NC		30
cis-1,3-Dichloropropene	ND	ND	ug/l	NC		30
Bromoform	ND	ND	ug/l	NC		30
1,1,2,2-Tetrachloroethane	ND	ND	ug/l	NC		30
Benzene	ND	ND	ug/l	NC		30

Lab Duplicate Analysis
Batch Quality Control

Project Name: NBHS IRA POTW
Project Number: 115058

Lab Number: L1522736
Report Date: 09/29/15

Parameter	Native Sample	Duplicate Sample	Units	RPD	RPD Limits
Volatile Organics by GC/MS - Westborough Lab Associated sample(s): 02 QC Batch ID: WG822272-3 QC Sample: L1522728-02 Client ID: DUP Sample					
Toluene	ND	ND	ug/l	NC	30
Ethylbenzene	ND	ND	ug/l	NC	30
Chloromethane	ND	ND	ug/l	NC	30
Bromomethane	ND	ND	ug/l	NC	30
Vinyl chloride	ND	ND	ug/l	NC	30
Chloroethane	ND	ND	ug/l	NC	30
1,1-Dichloroethene	ND	ND	ug/l	NC	30
trans-1,2-Dichloroethene	ND	ND	ug/l	NC	30
cis-1,2-Dichloroethene[1]	ND	ND	ug/l	NC	30
Trichloroethene	ND	ND	ug/l	NC	30
1,2-Dichlorobenzene	ND	ND	ug/l	NC	30
1,3-Dichlorobenzene	ND	ND	ug/l	NC	30
1,4-Dichlorobenzene	ND	ND	ug/l	NC	30
p/m-Xylene[1]	ND	ND	ug/l	NC	30
o-Xylene[1]	ND	ND	ug/l	NC	30
Xylene (Total)[1]	ND	ND	ug/l	NC	30
Styrene[1]	ND	ND	ug/l	NC	30
Acetone[1]	ND	ND	ug/l	NC	30
Carbon disulfide[1]	ND	ND	ug/l	NC	30

Lab Duplicate Analysis
Batch Quality Control

Project Name: NBHS IRA POTW
Project Number: 115058

Lab Number: L1522736
Report Date: 09/29/15

Parameter	Native Sample	Duplicate Sample	Units	RPD	RPD Limits
Volatile Organics by GC/MS - Westborough Lab Associated sample(s): 02 QC Batch ID: WG822272-3 QC Sample: L1522728-02 Client ID: DUP Sample					
2-Butanone[1]	ND	ND	ug/l	NC	30
Vinyl acetate[1]	ND	ND	ug/l	NC	30
4-Methyl-2-pentanone[1]	ND	ND	ug/l	NC	30
2-Hexanone[1]	ND	ND	ug/l	NC	30
Acrolein[1]	ND	ND	ug/l	NC	30
Acrylonitrile[1]	ND	ND	ug/l	NC	30
Dibromomethane[1]	ND	ND	ug/l	NC	30

Surrogate	%Recovery	Qualifier	%Recovery	Qualifier	Acceptance Criteria
Pentafluorobenzene	101		102		80-120
Fluorobenzene	97		99		80-120
4-Bromofluorobenzene	105		100		80-120

PCBS

Project Name: NBHS IRA POTW
Project Number: 115058
Lab Number: L1522736
Report Date: 09/29/15

SAMPLE RESULTS

Lab ID:	L1522736-01	Date Collected:	09/15/15 06:30
Client ID:	EFFLUENT (COMP)	Date Received:	09/15/15
Sample Location:	NEW BEDFORD, MA	Field Prep:	Not Specified
Matrix:	Water	Extraction Method:	EPA 608
Analytical Method:	5,608	Extraction Date:	09/22/15 05:21
Analytical Date:	09/24/15 05:33	Cleanup Method:	EPA 3665A
Analyst:	BT	Cleanup Date:	09/23/15
		Cleanup Method:	EPA 3660B
		Cleanup Date:	09/23/15

Parameter	Result	Qualifier	Units	RL	MDL	Dilution Factor	Column
Polychlorinated Biphenyls by GC - Westborough Lab							
Aroclor 1016	ND		ug/l	0.250	--	1	A
Aroclor 1221	ND		ug/l	0.250	--	1	A
Aroclor 1232	ND		ug/l	0.250	--	1	A
Aroclor 1242	ND		ug/l	0.250	--	1	A
Aroclor 1248	ND		ug/l	0.250	--	1	A
Aroclor 1254	ND		ug/l	0.250	--	1	A
Aroclor 1260	ND		ug/l	0.200	--	1	A

Surrogate	% Recovery	Qualifier	Acceptance Criteria	Column
2,4,5,6-Tetrachloro-m-xylene	**0**	Q	30-150	A
Decachlorobiphenyl	**0**	Q	30-150	A

Project Name: NBHS IRA POTW **Lab Number:** L1522736

Project Number: 115058 **Report Date:** 09/29/15

SAMPLE RESULTS

Lab ID:	L1522736-01 RE	Date Collected:	09/15/15 06:30
Client ID:	EFFLUENT (COMP)	Date Received:	09/15/15
Sample Location:	NEW BEDFORD, MA	Field Prep:	Not Specified
Matrix:	Water	Extraction Method:	EPA 608
Analytical Method:	5,608	Extraction Date:	09/25/15 19:55
Analytical Date:	09/26/15 22:51	Cleanup Method:	EPA 3665A
Analyst:	BT	Cleanup Date:	09/26/15
		Cleanup Method:	EPA 3660B
		Cleanup Date:	09/26/15

Parameter	Result	Qualifier	Units	RL	MDL	Dilution Factor	Column
Polychlorinated Biphenyls by GC - Westborough Lab							
Aroclor 1016	ND		ug/l	0.250	--	1	A
Aroclor 1221	ND		ug/l	0.250	--	1	A
Aroclor 1232	ND		ug/l	0.250	--	1	A
Aroclor 1242	ND		ug/l	0.250	--	1	A
Aroclor 1248	ND		ug/l	0.250	--	1	A
Aroclor 1254	ND		ug/l	0.250	--	1	A
Aroclor 1260	ND		ug/l	0.200	--	1	A

Surrogate	% Recovery	Qualifier	Acceptance Criteria	Column
2,4,5,6-Tetrachloro-m-xylene	64		30-150	A
Decachlorobiphenyl	63		30-150	A

Project Name: NBHS IRA POTW

Project Number: 115058

Lab Number: L1522736

Report Date: 09/29/15

Method Blank Analysis
Batch Quality Control

Analytical Method: 5,608
Analytical Date: 09/24/15 07:00
Analyst: JT

Extraction Method: EPA 608
Extraction Date: 09/22/15 05:21
Cleanup Method: EPA 3665A
Cleanup Date: 09/23/15
Cleanup Method: EPA 3660B
Cleanup Date: 09/23/15

Parameter	Result	Qualifier	Units	RL	MDL	Column
Polychlorinated Biphenyls by GC - Westborough Lab for sample(s): 01 Batch: WG823537-1						
Aroclor 1016	ND		ug/l	0.250	--	A
Aroclor 1221	ND		ug/l	0.250	--	A
Aroclor 1232	ND		ug/l	0.250	--	A
Aroclor 1242	ND		ug/l	0.250	--	A
Aroclor 1248	ND		ug/l	0.250	--	A
Aroclor 1254	ND		ug/l	0.250	--	A
Aroclor 1260	ND		ug/l	0.200	--	A

Surrogate	%Recovery	Qualifier	Acceptance Criteria	Column
2,4,5,6-Tetrachloro-m-xylene	**0**	Q	30-150	A
Decachlorobiphenyl	**0**	Q	30-150	A

Project Name: NBHS IRA POTW

Project Number: 115058

Lab Number: L1522736

Report Date: 09/29/15

Method Blank Analysis
Batch Quality Control

Analytical Method: 5,608
Analytical Date: 09/26/15 23:28
Analyst: BT

Extraction Method: EPA 608
Extraction Date: 09/25/15 19:55
Cleanup Method: EPA 3665A
Cleanup Date: 09/26/15
Cleanup Method: EPA 3660B
Cleanup Date: 09/26/15

Parameter	Result	Qualifier	Units	RL	MDL	Column
Polychlorinated Biphenyls by GC - Westborough Lab for sample(s): 01 Batch: WG825182-1						
Aroclor 1016	ND		ug/l	0.250	--	A
Aroclor 1221	ND		ug/l	0.250	--	A
Aroclor 1232	ND		ug/l	0.250	--	A
Aroclor 1242	ND		ug/l	0.250	--	A
Aroclor 1248	ND		ug/l	0.250	--	A
Aroclor 1254	ND		ug/l	0.250	--	A
Aroclor 1260	ND		ug/l	0.200	--	A

Surrogate	%Recovery	Qualifier	Acceptance Criteria	Column
2,4,5,6-Tetrachloro-m-xylene	72		30-150	A
Decachlorobiphenyl	80		30-150	A

Lab Control Sample Analysis

Batch Quality Control

Project Name: NBHS IRA POTW

Project Number: 115058

Lab Number: L1522736

Report Date: 09/29/15

Parameter	LCS %Recovery	Qual	LCSD %Recovery	Qual	%Recovery Limits	RPD	Qual	RPD Limits	Column
Polychlorinated Biphenyls by GC - Westborough Lab Associated sample(s): 01 Batch: WG823537-2									
Aroclor 1016	93		-		40-140	-		50	A
Aroclor 1260	84		-		40-140	-		50	A

Surrogate	LCS %Recovery	Qual	LCSD %Recovery	Qual	Acceptance Criteria	Column
2,4,5,6-Tetrachloro-m-xylene	**0**	Q			30-150	A
Decachlorobiphenyl	**0**	Q			30-150	A

Lab Control Sample Analysis
Batch Quality Control

Project Name: NBHS IRA POTW
Project Number: 115058

Lab Number: L1522736
Report Date: 09/29/15

Parameter	LCS %Recovery	Qual	LCSD %Recovery	Qual	%Recovery Limits	RPD	Qual	RPD Limits	Column
Polychlorinated Biphenyls by GC - Westborough Lab Associated sample(s): 01 Batch: WG825182-2 WG825182-3									
Aroclor 1016	86		86		40-140	0		50	A
Aroclor 1260	67		68		40-140	1		50	A

Surrogate	LCS %Recovery	Qual	LCSD %Recovery	Qual	Acceptance Criteria	Column
2,4,5,6-Tetrachloro-m-xylene	70		67		30-150	A
Decachlorobiphenyl	82		81		30-150	A

Lab Duplicate Analysis
Batch Quality Control

Project Name: NBHS IRA POTW
Project Number: 115058

Lab Number: L1522736
Report Date: 09/29/15

Parameter	Native Sample	Duplicate Sample	Units	RPD	Qual	RPD Limits	
Polychlorinated Biphenyls by GC - Westborough Lab Associated sample(s): 01 QC Batch ID: WG823537-4 QC Sample: L1523047-09 Client ID: DUP Sample							
Aroclor 1016	ND	ND	ug/l	NC		50	A
Aroclor 1221	ND	ND	ug/l	NC		50	A
Aroclor 1232	ND	ND	ug/l	NC		50	A
Aroclor 1242	ND	ND	ug/l	NC		50	A
Aroclor 1248	ND	ND	ug/l	NC		50	A
Aroclor 1254	ND	ND	ug/l	NC		50	A
Aroclor 1260	ND	ND	ug/l	NC		50	A

Surrogate	%Recovery	Qualifier	%Recovery	Qualifier	Acceptance Criteria	Column
2,4,5,6-Tetrachloro-m-xylene	**0**	Q	**0**	Q	30-150	A
Decachlorobiphenyl	**0**	Q	**0**	Q	30-150	A

INORGANICS
&
MISCELLANEOUS

Project Name: NBHS IRA POTW
Project Number: 115058

Lab Number: L1522736
Report Date: 09/29/15

SAMPLE RESULTS

Lab ID: L1522736-01
Client ID: EFFLUENT (COMP)
Sample Location: NEW BEDFORD, MA
Matrix: Water

Date Collected: 09/15/15 06:30
Date Received: 09/15/15
Field Prep: Not Specified

Parameter	Result	Qualifier	Units	RL	MDL	Dilution Factor	Date Prepared	Date Analyzed	Analytical Method	Analyst
General Chemistry - Westborough Lab										
Solids, Total Suspended	ND		mg/l	5.0	NA	1	-	09/22/15 06:55	30,2540D	DW
BOD, 5 day	ND		mg/l	2.0	NA	1	09/16/15 05:30	09/21/15 10:45	30,5210B	TA

Project Name: NBHS IRA POTW
Project Number: 115058

Lab Number: L1522736
Report Date: 09/29/15

SAMPLE RESULTS

Lab ID: L1522736-03
Client ID: EFFLUENT (GRAB)
Sample Location: NEW BEDFORD, MA
Matrix: Water

Date Collected: 09/15/15 06:30
Date Received: 09/15/15
Field Prep: Not Specified

Parameter	Result	Qualifier	Units	RL	MDL	Dilution Factor	Date Prepared	Date Analyzed	Analytical Method	Analyst
General Chemistry - Westborough Lab										
pH (H)	7.5		SU	-	NA	1	-	09/16/15 06:36	30,4500H+-B	LH
Oil & Grease, Hem-Grav	ND		mg/l	4.0	--	1	09/15/15 20:08	09/15/15 21:08	74,1664A	ML

Project Name: NBHS IRA POTW **Lab Number:** L1522736

Project Number: 115058 **Report Date:** 09/29/15

Method Blank Analysis
Batch Quality Control

Parameter	Result	Qualifier	Units	RL	MDL	Dilution Factor	Date Prepared	Date Analyzed	Analytical Method	Analyst
General Chemistry - Westborough Lab for sample(s): 03 Batch: WG821577-1										
Oil & Grease, Hem-Grav	ND		mg/l	4.0	--	1	09/15/15 20:08	09/15/15 21:08	74,1664A	ML
General Chemistry - Westborough Lab for sample(s): 01 Batch: WG821718-1										
BOD, 5 day	ND		mg/l	2.0	NA	1	09/16/15 05:30	09/21/15 10:45	30,5210B	TA
General Chemistry - Westborough Lab for sample(s): 01 Batch: WG823545-1										
Solids, Total Suspended	ND		mg/l	5.0	NA	1	-	09/22/15 06:55	30,2540D	DW

Lab Control Sample Analysis
Batch Quality Control

Project Name: NBHS IRA POTW
Project Number: 115058

Lab Number: L1522736
Report Date: 09/29/15

Parameter	LCS %Recovery	Qual	LCSD %Recovery	Qual	%Recovery Limits	RPD	Qual	RPD Limits
General Chemistry - Westborough Lab Associated sample(s): 03 Batch: WG821577-2								
Oil & Grease, Hem-Grav	92		-		78-114	-		18
General Chemistry - Westborough Lab Associated sample(s): 03 Batch: WG821696-1								
pH	100		-		99-101	-		5
General Chemistry - Westborough Lab Associated sample(s): 01 Batch: WG821718-2								
BOD, 5 day	**120**	Q	-		85-115	-		20

Matrix Spike Analysis
Batch Quality Control

Project Name: NBHS IRA POTW
Project Number: 115058

Lab Number: L1522736
Report Date: 09/29/15

Parameter	Native Sample	MS Added	MS Found	MS %Recovery	Qual	MSD Found	MSD %Recovery	Qual	Recovery Limits	RPD	Qual	RPD Limits
General Chemistry - Westborough Lab Associated sample(s): 03 QC Batch ID: WG821577-4 QC Sample: L1522725-01 Client ID: MS Sample												
Oil & Grease, Hem-Grav	18	44	53	79		-	-		78-114	-		18
General Chemistry - Westborough Lab Associated sample(s): 01 QC Batch ID: WG821718-4 QC Sample: L1522736-01 Client ID: EFFLUENT (COMP)												
BOD, 5 day	ND	100	150	**148**	Q	-	-		50-145	-		35

Lab Duplicate Analysis
Batch Quality Control

Project Name: NBHS IRA POTW
Project Number: 115058

Lab Number: L1522736
Report Date: 09/29/15

Parameter	Native Sample	Duplicate Sample	Units	RPD	Qual	RPD Limits
General Chemistry - Westborough Lab Associated sample(s): 03 QC Batch ID: WG821577-3 QC Sample: L1522724-01 Client ID: DUP Sample						
Oil & Grease, Hem-Grav	ND	5.4	mg/l	NC		18
General Chemistry - Westborough Lab Associated sample(s): 03 QC Batch ID: WG821696-2 QC Sample: L1522736-03 Client ID: EFFLUENT (GRAB)						
pH (H)	7.5	7.5	SU	0		5
General Chemistry - Westborough Lab Associated sample(s): 01 QC Batch ID: WG821718-3 QC Sample: L1522649-01 Client ID: DUP Sample						
BOD, 5 day	15	16	mg/l	6		35
General Chemistry - Westborough Lab Associated sample(s): 01 QC Batch ID: WG823545-2 QC Sample: L1522839-04 Client ID: DUP Sample						
Solids, Total Suspended	90	86	mg/l	5		29

Project Name: NBHS IRA POTW
Project Number: 115058

Lab Number: L1522736
Report Date: 09/29/15

Sample Receipt and Container Information

Were project specific reporting limits specified? YES

Reagent H2O Preserved Vials Frozen on: NA

Cooler Information Custody Seal

Cooler	
A	Absent

Container Information

Container ID	Container Type	Cooler	pH	Temp deg C	Pres	Seal	Analysis(*)
L1522736-01A	Plastic 500ml unpreserved	A	7	3.8	Y	Absent	BOD-5210(2)
L1522736-01B	Plastic 950ml unpreserved	A	7	3.8	Y	Absent	TSS-2540(7)
L1522736-01C	Amber 1000ml Na2S2O3	A	7	3.8	Y	Absent	PCB-608(7)
L1522736-01D	Amber 1000ml Na2S2O3	A	7	3.8	Y	Absent	PCB-608(7)
L1522736-02A	Vial Na2S2O3 preserved split	A	N/A	3.8	Y	Absent	624(3)
L1522736-02B	Vial Na2S2O3 preserved split	A	N/A	3.8	Y	Absent	624(3)
L1522736-02C	Vial Na2S2O3 preserved split	A	N/A	3.8	Y	Absent	624(3)
L1522736-03A	Plastic 120ml unpreserved	A	7	3.8	Y	Absent	PH-4500(.01)
L1522736-03B	Amber 1000ml HCl preserved	A	N/A	3.8	Y	Absent	OG-1664(28)
L1522736-03C	Amber 1000ml HCl preserved	A	N/A	3.8	Y	Absent	OG-1664(28)
L1522736-04A	Vial Na2S2O3 preserved	A	N/A	3.8	Y	Absent	COMP-VOA()
L1522736-04B	Vial Na2S2O3 preserved	A	N/A	3.8	Y	Absent	COMP-VOA()
L1522736-04C	Vial Na2S2O3 preserved	A	N/A	3.8	Y	Absent	COMP-VOA()
L1522736-04D	Vial Na2S2O3 preserved	A	N/A	3.8	Y	Absent	COMP-VOA()
L1522736-04E	Vial Na2S2O3 preserved	A	N/A	3.8	Y	Absent	COMP-VOA()
L1522736-04F	Vial Na2S2O3 preserved	A	N/A	3.8	Y	Absent	COMP-VOA()
L1522736-04G	Vial Na2S2O3 preserved	A	N/A	3.8	Y	Absent	COMP-VOA()
L1522736-04H	Vial Na2S2O3 preserved	A	N/A	3.8	Y	Absent	COMP-VOA()
L1522736-04I	Vial Na2S2O3 preserved	A	N/A	3.8	Y	Absent	COMP-VOA()
L1522736-04J	Vial Na2S2O3 preserved	A	N/A	3.8	Y	Absent	COMP-VOA()
L1522736-04K	Vial Na2S2O3 preserved	A	N/A	3.8	Y	Absent	COMP-VOA()
L1522736-04L	Vial Na2S2O3 preserved	A	N/A	3.8	Y	Absent	COMP-VOA()

*Values in parentheses indicate holding time in days

Project Name:	NBHS IRA POTW	**Lab Number:**	L1522736
Project Number:	115058	**Report Date:**	09/29/15

GLOSSARY

Acronyms

EDL	- Estimated Detection Limit: This value represents the level to which target analyte concentrations are reported as estimated values, when those target analyte concentrations are quantified below the reporting limit (RL). The EDL includes any adjustments from dilutions, concentrations or moisture content, where applicable. The use of EDLs is specific to the analysis of PAHs using Solid-Phase Microextraction (SPME).
EPA	- Environmental Protection Agency.
LCS	- Laboratory Control Sample: A sample matrix, free from the analytes of interest, spiked with verified known amounts of analytes or a material containing known and verified amounts of analytes.
LCSD	- Laboratory Control Sample Duplicate: Refer to LCS.
LFB	- Laboratory Fortified Blank: A sample matrix, free from the analytes of interest, spiked with verified known amounts of analytes or a material containing known and verified amounts of analytes.
MDL	- Method Detection Limit: This value represents the level to which target analyte concentrations are reported as estimated values, when those target analyte concentrations are quantified below the reporting limit (RL). The MDL includes any adjustments from dilutions, concentrations or moisture content, where applicable.
MS	- Matrix Spike Sample: A sample prepared by adding a known mass of target analyte to a specified amount of matrix sample for which an independent estimate of target analyte concentration is available.
MSD	- Matrix Spike Sample Duplicate: Refer to MS.
NA	- Not Applicable.
NC	- Not Calculated: Term is utilized when one or more of the results utilized in the calculation are non-detect at the parameter's reporting unit.
NI	- Not Ignitable.
NP	- Non-Plastic: Term is utilized for the analysis of Atterberg Limits in soil.
RL	- Reporting Limit: The value at which an instrument can accurately measure an analyte at a specific concentration. The RL includes any adjustments from dilutions, concentrations or moisture content, where applicable.
RPD	- Relative Percent Difference: The results from matrix and/or matrix spike duplicates are primarily designed to assess the precision of analytical results in a given matrix and are expressed as relative percent difference (RPD). Values which are less than five times the reporting limit for any individual parameter are evaluated by utilizing the absolute difference between the values; although the RPD value will be provided in the report.
SRM	- Standard Reference Material: A reference sample of a known or certified value that is of the same or similar matrix as the associated field samples.
TIC	- Tentatively Identified Compound: A compound that has been identified to be present and is not part of the target compound list (TCL) for the method and/or program. All TICs are qualitatively identified and reported as estimated concentrations.

Footnotes

1	- The reference for this analyte should be considered modified since this analyte is absent from the target analyte list of the original method.

Terms

Total: With respect to Organic analyses, a 'Total' result is defined as the summation of results for individual isomers or Aroclors. If a 'Total' result is requested, the results of its individual components will also be reported. This is applicable to 'Total' results for methods 8260, 8081 and 8082.

Analytical Method: Both the document from which the method originates and the analytical reference method. (Example: EPA 8260B is shown as 1,8260B.) The codes for the reference method documents are provided in the References section of the Addendum.

Data Qualifiers

A	- Spectra identified as "Aldol Condensation Product".
B	- The analyte was detected above the reporting limit in the associated method blank. Flag only applies to associated field samples that have detectable concentrations of the analyte at less than ten times (10x) the concentration found in the blank. For MCP-related projects, flag only applies to associated field samples that have detectable concentrations of the analyte at less than ten times (10x) the concentration found in the blank. For DOD-related projects, flag only applies to associated field samples that have detectable concentrations of the analyte at less than ten times (10x) the concentration found in the blank AND the analyte was detected above one-half the reporting limit (or above the reporting limit for common lab contaminants) in the associated method blank. For NJ-Air-related projects, flag only applies to associated field samples that have detectable concentrations of the analyte above the reporting limit. For NJ-related projects (excluding Air), flag only applies to associated field samples that have detectable concentrations of the analyte, which was detected above the reporting limit in the associated method blank or above five times the reporting limit for common lab contaminants (Phthalates, Acetone, Methylene Chloride, 2-Butanone).
C	- Co-elution: The target analyte co-elutes with a known lab standard (i.e. surrogate, internal standards, etc.) for co-extracted analyses.

Report Format: Data Usability Report

Project Name:	NBHS IRA POTW	**Lab Number:**	L1522736
Project Number:	115058	**Report Date:**	09/29/15

Data Qualifiers

D - Concentration of analyte was quantified from diluted analysis. Flag only applies to field samples that have detectable concentrations of the analyte.

E - Concentration of analyte exceeds the range of the calibration curve and/or linear range of the instrument.

G - The concentration may be biased high due to matrix interferences (i.e, co-elution) with non-target compound(s). The result should be considered estimated.

H - The analysis of pH was performed beyond the regulatory-required holding time of 15 minutes from the time of sample collection.

I - The lower value for the two columns has been reported due to obvious interference.

M - Reporting Limit (RL) exceeds the MCP CAM Reporting Limit for this analyte.

NJ - Presumptive evidence of compound. This represents an estimated concentration for Tentatively Identified Compounds (TICs), where the identification is based on a mass spectral library search.

P - The RPD between the results for the two columns exceeds the method-specified criteria.

Q - The quality control sample exceeds the associated acceptance criteria. For DOD-related projects, LCS and/or Continuing Calibration Standard exceedences are also qualified on all associated sample results. Note: This flag is not applicable for matrix spike recoveries when the sample concentration is greater than 4x the spike added or for batch duplicate RPD when the sample concentrations are less than 5x the RL. (Metals only.)

R - Analytical results are from sample re-analysis.

RE - Analytical results are from sample re-extraction.

S - Analytical results are from modified screening analysis.

J - Estimated value. This represents an estimated concentration for Tentatively Identified Compounds (TICs).

ND - Not detected at the reporting limit (RL) for the sample.

Report Format: Data Usability Report

Project Name: NBHS IRA POTW **Lab Number:** L1522736
Project Number: 115058 **Report Date:** 09/29/15

REFERENCES

5 Methods for the Organic Chemical Analysis of Municipal and Industrial Wastewater. Appendix A, Part 136, 40 CFR (Code of Federal Regulations).

30 Standard Methods for the Examination of Water and Wastewater. APHA-AWWA-WPCF. 18th Edition. 1992.

74 Method 1664,Revision A: N-Hexane Extractable Material (HEM; Oil & Grease) and Silica Gel Treated N-Hexane Extractable Material (SGT-HEM; Non-polar Material) by Extraction and Gravimetry, EPA-821-R-98-002, February 1999.

LIMITATION OF LIABILITIES

Alpha Analytical performs services with reasonable care and diligence normal to the analytical testing laboratory industry. In the event of an error, the sole and exclusive responsibility of Alpha Analytical shall be to re-perform the work at it's own expense. In no event shall Alpha Analytical be held liable for any incidental, consequential or special damages, including but not limited to, damages in any way connected with the use of, interpretation of, information or analysis provided by Alpha Analytical.

We strongly urge our clients to comply with EPA protocol regarding sample volume, preservation, cooling, containers, sampling procedures, holding time and splitting of samples in the field.

Certification Information

The following analytes are not included in our Primary NELAP Scope of Accreditation:

Westborough Facility
EPA 8260C: 1,2,4,5-Tetramethylbenzene, 4-Ethyltoluene, Iodomethane (methyl iodide) (soil), Methyl methacrylate (soil), Azobenzene.
EPA 8270D: Dimethylnaphthalene,1,4-Diphenylhydrazine.
EPA 625: 4-Chloroaniline, 4-Methylphenol.
SM4500: Soil: Total Phosphorus, TKN, NO2, NO3.

Mansfield Facility
EPA 8270D: Biphenyl.
EPA 2540D: TSS
EPA TO-15: Halothane, 2,4,4-Trimethyl-2-pentene, 2,4,4-Trimethyl-1-pentene, Thiophene, 2-Methylthiophene, 3-Methylthiophene, 2-Ethylthiophene, 1,2,3-Trimethylbenzene, Indan, Indene, 1,2,4,5-Tetramethylbenzene, Benzothiophene, 1-Methylnaphthalene.

The following analytes are included in our Massachusetts DEP Scope of Accreditation, Westborough Facility:

Drinking Water
EPA 200.8: Sb,As,Ba,Be,Cd,Cr,Cu,Pb,Ni,Se,Tl; **EPA 200.7**: Ba,Be,Ca,Cd,Cr,Cu,Na; **EPA 245.1:** Mercury;
EPA 300.0: Nitrate-N, Fluoride, Sulfate; **EPA 353.2**: Nitrate-N, Nitrite-N; **SM4500NO3-F**: Nitrate-N, Nitrite-N; **SM4500F-C, SM4500CN-CE, EPA 180.1, SM2130B, SM4500Cl-D, SM2320B, SM2540C, SM4500H-B**
EPA 332: Perchlorate.
Microbiology: **SM9215B; SM9223-P/A, SM9223B-Colilert-QT, Enterolert-QT.**

Non-Potable Water
EPA 200.8: Al,Sb,As,Be,Cd,Cr,Cu,Pb,Mn,Ni,Se,Ag,Tl,Zn;
EPA 200.7: Al,Sb,As,Be,Cd,Ca,Cr,Co,Cu,Fe,Pb,Mg,Mn,Mo,Ni,K,Se,Ag,Na,Sr,Ti,Tl,V,Zn;
EPA 245.1, SM4500H,B, EPA 120.1, SM2510B, SM2540C, SM2340B, SM2320B, SM4500CL-E, SM4500F-BC, SM426C, SM4500NH3-BH, **EPA 350.1**: Ammonia-N, **LACHAT 10-107-06-1-B**: Ammonia-N, **SM4500NO3-F, EPA 353.2**: Nitrate-N**, SM4500NH3-BC-NES, EPA 351.1, SM4500P-E, SM4500P-B, E, SM5220D, EPA 410.4, SM5210B, SM5310C, SM4500CL-D, EPA 1664, SM14 510AC, EPA 420.1, SM4500-CN-CE, SM2540D.**
EPA 624: Volatile Halocarbons & Aromatics,
EPA 608: Chlordane, Toxaphene, Aldrin, alpha-BHC, beta-BHC, gamma-BHC, delta-BHC, Dieldrin, DDD, DDE, DDT, Endosulfan I, Endosulfan II, Endosulfan sulfate, Endrin, Endrin Aldehyde, Heptachlor, Heptachlor Epoxide, PCBs
EPA 625: SVOC (Acid/Base/Neutral Extractables), **EPA 600/4-81-045**: PCB-Oil.
Microbiology: **SM9223B-Colilert-QT; Enterolert-QT, SM9222D-MF**.

For a complete listing of analytes and methods, please contact your Alpha Project Manager.

CHAIN OF CUSTODY

PAGE 1 OF 1

Date Rec'd in Lab: 9/15/15

ALPHA Job #: L1522736

ALPHA ANALYTICAL
8 Walkup Drive
Westboro, MA 01581
Tel: 508-898-9220

320 Forbes Blvd
Mansfield, MA 02048
Tel: 508-822-9300

Project Information

Project Name: NBHS IRA POTW
Project Location: NEW BEDFORD MA.
Project #: 115058
Project Manager: DAVID SULLIVAN
ALPHA Quote #:

Report Information - Data Deliverables

☑ ADEx ☑ EMAIL

Billing Information

☐ Same as Client info PO #:

Client Information

Client: TRC
Address: 650 SUFFOLK ST
LOWELL MA
Phone: 978-970-5600
Email:

Regulatory Requirements & Project Information Requirements

☐ Yes ☐ No MA MCP Analytical Methods ☐ Yes ☐ No CT RCP Analytical Methods
☐ Yes ☐ No Matrix Spike Required on this SDG? (Required for MCP Inorganics)
☐ Yes ☐ No GW1 Standards (Info Required for Metals & EPH with Targets)
☐ Yes ☐ No NPDES RGP
☐ Other State /Fed Program _____ Criteria _____

Turn-Around Time

☑ Standard ☐ RUSH (only confirmed if pre-approved!)

Date Due:

Additional Project Information:

ANALYSIS: VOC: ☐ 8260 ☑ 624 ☐ 524.2; SVOC: ☐ ABN ☐ PAH; METALS: ☐ MCP 13 ☐ MCP 14 ☐ RCP 15; METALS: ☐ RCRA5 ☐ RCRA8 ☐ PP13; EPH: ☐ Ranges & Targets ☐ Ranges Only; VPH: ☐ Ranges & Targets ☐ Ranges Only; ☑ PCB ☐ PEST 608; TPH: ☐ Quant Only ☐ Fingerprint; BOD 5210; pH 4500; OIL GREASE 1664; TSS 2540

SAMPLE INFO
Filtration
☐ Field
☐ Lab to do
Preservation
☐ Lab to do

ALPHA Lab ID (Lab Use Only)	Sample ID	Collection Date	Collection Time	Sample Matrix	Sampler Initials	VOC	SVOC	METALS	METALS	EPH	VPH	PCB	TPH	BOD	pH	OIL GREASE	TSS			Sample Comments	TOTAL # BOTTLES
01	EFFLUENT (COMO)	9/14-9/15/15	7	E	JF							✓		✓			✓				4
02 04	EFFLUENT (1-4)	"	7:05/16:30 22:30/6:30	E	JF	✓															12
03	EFFLUENT (GRAB)	9/15/15	6:30	E	JF										✓	✓					3

Container Type	V						A		P	P	A	P	
Preservative	H						H		A	A	B	A	

Container Type
P= Plastic
A= Amber glass
V= Vial
G= Glass
B= Bacteria cup
C= Cube
O= Other
E= Encore
D= BOD Bottle

Preservative
A= None
B= HCl
C= HNO_3
D= H_2SO_4
E= NaOH
F= MeOH
G= $NaHSO_4$
H = $Na_2S_2O_3$
I= Ascorbic Acid
J = NH_4Cl
K= Zn Acetate
O= Other

Relinquished By:	Date/Time	Received By:	Date/Time
Laura C. Fuio	9/15/15	Mary Anderson	9/15/15 1505
Mary Anderson	9-15-15 1625	Richard Scott	9/15/15 16:25

All samples submitted are subject to Alpha's Terms and Conditions. See reverse side.

FORM NO: 01-01 (rev. 12-Mar-2012)

VAPOR MITIGATION SYSTEM EMISSION ANALYTICAL DATA

ANALYTICAL REPORT

Lab Number:	L1510617
Client:	TRC Environmental Consultants Wannalancit Mills 650 Suffolk Street Lowell, MA 01854
ATTN:	David Sullivan
Phone:	(978) 656-3565
Project Name:	NBHS IRA O&M
Project Number:	115058
Report Date:	05/26/15

The original project report/data package is held by Alpha Analytical. This report/data package is paginated and should be reproduced only in its entirety. Alpha Analytical holds no responsibility for results and/or data that are not consistent with the original.

Certifications & Approvals: NY (11627), CT (PH-0141), NH (2206), NJ NELAP (MA015), RI (LAO00299), ME (MA00030), PA (68-02089), VA (460194), LA NELAP (03090), FL (E87814), TX (T104704419), WA (C954), USFWS (Permit #LE2069641), USDA (Permit #P330-11-00109), US Army Corps of Engineers.

320 Forbes Boulevard, Mansfield, MA 02048-1806
508-822-9300 (Fax) 508-822-3288 800-624-9220 - www.alphalab.com

Project Name: NBHS IRA O&M
Project Number: 115058

Lab Number: L1510617
Report Date: 05/26/15

Alpha Sample ID	Client ID	Matrix	Sample Location	Collection Date/Time	Receive Date
L1510617-01	VAPOR INLET	SOIL_VAPOR	NEW BEDFORD, MA	05/14/15 09:46	05/15/15
L1510617-02	VAPOR OUTLET	SOIL_VAPOR	NEW BEDFORD, MA	05/14/15 09:46	05/15/15

Project Name: NBHS IRA O&M **Lab Number:** L1510617

Project Number: 115058 **Report Date:** 05/26/15

MADEP MCP Response Action Analytical Report Certification

This form provides certifications for all samples performed by MCP methods. Please refer to the Sample Results and Container Information sections of this report for specification of MCP methods used for each analysis. The following questions pertain only to MCP Analytical Methods.

An affirmative response to questions A through F is required for "Presumptive Certainty" status		
A	Were all samples received in a condition consistent with those described on the Chain-of-Custody, properly preserved (including temperature) in the field or laboratory, and prepared/analyzed within method holding times?	YES
B	Were the analytical method(s) and all associated QC requirements specified in the selected CAM protocol(s) followed?	YES
C	Were all required corrective actions and analytical response actions specified in the selected CAM protocol(s) implemented for all identified performance standard non-conformances?	YES
D	Does the laboratory report comply with all the reporting requirements specified in CAM VII A, "Quality Assurance and Quality Control Guidelines for the Acquisition and Reporting of Analytical Data?"	YES
E a.	VPH, EPH, and APH Methods only: Was each method conducted without significant modification(s)? (Refer to the individual method(s) for a list of significant modifications).	N/A
E b.	APH and TO-15 Methods only: Was the complete analyte list reported for each method?	YES
F	Were all applicable CAM protocol QC and performance standard non-conformances identified and evaluated in a laboratory narrative (including all "No" responses to Questions A through E)?	YES

A response to questions G, H and I is required for "Presumptive Certainty" status		
G	Were the reporting limits at or below all CAM reporting limits specified in the selected CAM protocol(s)?	NO
H	Were all QC performance standards specified in the CAM protocol(s) achieved?	YES
I	Were results reported for the complete analyte list specified in the selected CAM protocol(s)?	YES

For any questions answered "No", please refer to the case narrative section on the following page(s).

Please note that sample matrix information is located in the Sample Results section of this report.

Project Name: NBHS IRA O&M
Project Number: 115058

Lab Number: L1510617
Report Date: 05/26/15

Case Narrative

The samples were received in accordance with the Chain of Custody and no significant deviations were encountered during the preparation or analysis unless otherwise noted. Sample Receipt, Container Information, and the Chain of Custody are located at the back of the report.

Results contained within this report relate only to the samples submitted under this Alpha Lab Number and meet all of the requirements of NELAC, for all NELAC accredited parameters. The data presented in this report is organized by parameter (i.e. VOC, SVOC, etc.). Sample specific Quality Control data (i.e. Surrogate Spike Recovery) is reported at the end of the target analyte list for each individual sample, followed by the Laboratory Batch Quality Control at the end of each parameter. If a sample was re-analyzed or re-extracted due to a required quality control corrective action and if both sets of data are reported, the Laboratory ID of the re-analysis or re-extraction is designated with an "R" or "RE", respectively. When multiple Batch Quality Control elements are reported (e.g. more than one LCS), the associated samples for each element are noted in the grey shaded header line of each data table. Any Laboratory Batch, Sample Specific % recovery or RPD value that is outside the listed Acceptance Criteria is bolded in the report. All specific QC information is also incorporated in the Data Usability format of our Data Merger tool where it can be reviewed along with any associated usability implications. Soil/sediments, solids and tissues are reported on a dry weight basis unless otherwise noted. Definitions of all data qualifiers and acronyms used in this report are provided in the Glossary located at the back of the report.

In reference to questions H (CAM) or 4 (RCP) when "NO" is checked, the performance criteria for CAM and RCP methods allow for some quality control failures to occur and still be within method compliance. In these instances the specific failure is not narrated but noted in the associated QC table. The information is also incorporated in the Data Usability format of our Data Merger tool where it can be reviewed along with any associated usability implications.

Please see the associated ADEx data file for a comparison of laboratory reporting limits that were achieved with the regulatory Numerical Standards requested on the Chain of Custody.

HOLD POLICY
For samples submitted on hold, Alpha's policy is to hold samples (with the exception of Air canisters) free of charge for 21 calendar days from the date the project is completed. After 21 calendar days, we will dispose of all samples submitted including those put on hold unless you have contacted your Client Service Representative and made arrangements for Alpha to continue to hold the samples. Air canisters will be disposed after 3 business days from the date the project is completed.

Please contact Client Services at 800-624-9220 with any questions.

Project Name: NBHS IRA O&M **Lab Number:** L1510617
Project Number: 115058 **Report Date:** 05/26/15

Case Narrative (continued)

MCP Related Narratives

Canisters were released from the laboratory on May 13, 2015. The canister certification data is provided as an addendum.

MCP Volatile Organics in Air

In reference to question G:

One or more of the target analytes did not achieve the requested CAM reporting limits.

MCP-TO15

Sample L1510617-01 The presence of Acetone could not be determined in this sample due to a non-target compound interfering with the identification and quantification of this compound.

MCP-TO15-SIM

Sample L1510617-02 The presence of Acetone could not be determined in this sample due to a non-target compound interfering with the identification and quantification of this compound.

The WG786392-3 LCS recovery for 1,2,3-Trichlorobenzene (133%) is above the upper 130% acceptance limit. The response for this compound was elevated however it was not detected in any of the associated samples therefore no further action was taken.

I, the undersigned, attest under the pains and penalties of perjury that, to the best of my knowledge and belief and based upon my personal inquiry of those responsible for providing the information contained in this analytical report, such information is accurate and complete. This certificate of analysis is not complete unless this page accompanies any and all pages of this report.

Authorized Signature: Christopher J. Anderson

Title: Technical Director/Representative Date: 05/26/15

AIR

Project Name: NBHS IRA O&M
Project Number: 115058

Lab Number: L1510617
Report Date: 05/26/15

SAMPLE RESULTS

Lab ID: L1510617-01
Client ID: VAPOR INLET
Sample Location: NEW BEDFORD, MA
Matrix: Soil_Vapor
Anaytical Method: 101,TO-15
Analytical Date: 05/20/15 04:04
Analyst: RY

Date Collected: 05/14/15 09:46
Date Received: 05/15/15
Field Prep: Not Specified

Parameter	ppbV Results	ppbV RL	ppbV MDL	ug/m3 Results	ug/m3 RL	ug/m3 MDL	Qualifier	Dilution Factor
MCP Volatile Organics in Air - Mansfield Lab								
Vinyl chloride	ND	0.200	--	ND	0.511	--		1
Bromomethane	ND	0.200	--	ND	0.777	--		1
Acetone	ND	1.00	--	ND	2.38	--		1
1,1-Dichloroethene	ND	0.200	--	ND	0.793	--		1
Methylene chloride	ND	0.500	--	ND	1.74	--		1
trans-1,2-Dichloroethene	ND	0.200	--	ND	0.793	--		1
1,1-Dichloroethane	ND	0.200	--	ND	0.809	--		1
Methyl tert butyl ether	ND	0.200	--	ND	0.721	--		1
2-Butanone	0.528	0.500	--	1.56	1.47	--		1
cis-1,2-Dichloroethene	ND	0.200	--	ND	0.793	--		1
Chloroform	0.201	0.200	--	0.982	0.977	--		1
1,2-Dichloroethane	ND	0.200	--	ND	0.809	--		1
1,1,1-Trichloroethane	ND	0.200	--	ND	1.09	--		1
Benzene	ND	0.200	--	ND	0.639	--		1
Carbon tetrachloride	ND	0.200	--	ND	1.26	--		1
1,2-Dichloropropane	ND	0.200	--	ND	0.924	--		1
Bromodichloromethane	ND	0.200	--	ND	1.34	--		1
1,4-Dioxane	ND	0.200	--	ND	0.721	--		1
Trichloroethene	0.217	0.200	--	1.17	1.07	--		1
cis-1,3-Dichloropropene	ND	0.200	--	ND	0.908	--		1
4-Methyl-2-pentanone	ND	0.500	--	ND	2.05	--		1
trans-1,3-Dichloropropene	ND	0.200	--	ND	0.908	--		1
1,1,2-Trichloroethane	ND	0.200	--	ND	1.09	--		1
Toluene	0.647	0.200	--	2.44	0.754	--		1

Project Name: NBHS IRA O&M
Project Number: 115058
Lab Number: L1510617
Report Date: 05/26/15

SAMPLE RESULTS

Lab ID: L1510617-01
Client ID: VAPOR INLET
Sample Location: NEW BEDFORD, MA
Date Collected: 05/14/15 09:46
Date Received: 05/15/15
Field Prep: Not Specified

Parameter	ppbV Results	ppbV RL	ppbV MDL	ug/m3 Results	ug/m3 RL	ug/m3 MDL	Qualifier	Dilution Factor
MCP Volatile Organics in Air - Mansfield Lab								
Dibromochloromethane	ND	0.200	--	ND	1.70	--		1
1,2-Dibromoethane	ND	0.200	--	ND	1.54	--		1
Tetrachloroethene	ND	0.200	--	ND	1.36	--		1
Chlorobenzene	ND	0.200	--	ND	0.921	--		1
Ethylbenzene	ND	0.200	--	ND	0.869	--		1
p/m-Xylene	ND	0.400	--	ND	1.74	--		1
Bromoform	ND	0.200	--	ND	2.07	--		1
Styrene	ND	0.200	--	ND	0.852	--		1
1,1,2,2-Tetrachloroethane	ND	0.200	--	ND	1.37	--		1
o-Xylene	ND	0.200	--	ND	0.869	--		1
1,3-Dichlorobenzene	ND	0.200	--	ND	1.20	--		1
1,4-Dichlorobenzene	ND	0.200	--	ND	1.20	--		1
1,2-Dichlorobenzene	ND	0.200	--	ND	1.20	--		1
1,2,4-Trichlorobenzene	ND	0.200	--	ND	1.48	--		1
Naphthalene	ND	0.200	--	ND	1.05	--		1
Hexachlorobutadiene	ND	0.200	--	ND	2.13	--		1

Internal Standard	% Recovery	Qualifier	Acceptance Criteria
1,4-Difluorobenzene	83		60-140
Bromochloromethane	88		60-140
chlorobenzene-d5	88		60-140

Project Name: NBHS IRA O&M
Project Number: 115058
Lab Number: L1510617
Report Date: 05/26/15

SAMPLE RESULTS

Lab ID: L1510617-02
Client ID: VAPOR OUTLET
Sample Location: NEW BEDFORD, MA
Matrix: Soil_Vapor
Anaytical Method: 101,TO15-SIM
Analytical Date: 05/20/15 03:32
Analyst: RY

Date Collected: 05/14/15 09:46
Date Received: 05/15/15
Field Prep: Not Specified

Parameter	ppbV Results	ppbV RL	ppbV MDL	ug/m3 Results	ug/m3 RL	ug/m3 MDL	Qualifier	Dilution Factor
MCP Volatile Organics in Air by SIM - Mansfield Lab								
Vinyl chloride	0.113	0.020	--	0.289	0.051	--		1
Bromomethane	ND	0.020	--	ND	0.078	--		1
Acetone	ND	1.00	--	ND	2.38	--		1
1,1-Dichloroethene	ND	0.020	--	ND	0.079	--		1
Methylene chloride	ND	1.40	--	ND	1.74	--		1
trans-1,2-Dichloroethene	1.24	0.020	--	4.92	0.079	--		1
1,1-Dichloroethane	ND	0.020	--	ND	0.081	--		1
Methyl tert butyl ether	ND	0.020	--	ND	0.072	--		1
2-Butanone	ND	0.500	--	ND	1.47	--		1
cis-1,2-Dichloroethene	3.09	0.020	--	12.3	0.079	--		1
Chloroform	0.193	0.020	--	0.943	0.098	--		1
1,2-Dichloroethane	ND	0.020	--	ND	0.081	--		1
1,1,1-Trichloroethane	ND	0.020	--	ND	0.109	--		1
Benzene	ND	0.100	--	ND	0.319	--		1
Carbon tetrachloride	ND	0.020	--	ND	0.126	--		1
1,2-Dichloropropane	ND	0.020	--	ND	0.092	--		1
Bromodichloromethane	ND	0.020	--	ND	0.134	--		1
1,4-Dioxane	ND	0.100	--	ND	0.360	--		1
Trichloroethene	ND	0.020	--	ND	0.107	--		1
cis-1,3-Dichloropropene	ND	0.020	--	ND	0.091	--		1
4-Methyl-2-pentanone	ND	0.500	--	ND	2.05	--		1
trans-1,3-Dichloropropene	ND	0.020	--	ND	0.091	--		1
1,1,2-Trichloroethane	ND	0.020	--	ND	0.109	--		1
Toluene	0.137	0.050	--	0.516	0.188	--		1

Project Name: NBHS IRA O&M
Project Number: 115058
Lab Number: L1510617
Report Date: 05/26/15

SAMPLE RESULTS

Lab ID: L1510617-02
Client ID: VAPOR OUTLET
Sample Location: NEW BEDFORD, MA
Date Collected: 05/14/15 09:46
Date Received: 05/15/15
Field Prep: Not Specified

Parameter	ppbV Results	ppbV RL	ppbV MDL	ug/m3 Results	ug/m3 RL	ug/m3 MDL	Qualifier	Dilution Factor
MCP Volatile Organics in Air by SIM - Mansfield Lab								
Dibromochloromethane	ND	0.020	--	ND	0.170	--		1
1,2-Dibromoethane	ND	0.020	--	ND	0.154	--		1
Tetrachloroethene	ND	0.020	--	ND	0.136	--		1
Chlorobenzene	ND	0.020	--	ND	0.092	--		1
Ethylbenzene	0.024	0.020	--	0.104	0.087	--		1
p/m-Xylene	0.099	0.040	--	0.430	0.174	--		1
Bromoform	ND	0.020	--	ND	0.207	--		1
Styrene	ND	0.020	--	ND	0.085	--		1
1,1,2,2-Tetrachloroethane	ND	0.020	--	ND	0.137	--		1
o-Xylene	0.040	0.020	--	0.174	0.087	--		1
1,3-Dichlorobenzene	ND	0.020	--	ND	0.120	--		1
1,4-Dichlorobenzene	ND	0.020	--	ND	0.120	--		1
1,2-Dichlorobenzene	ND	0.020	--	ND	0.120	--		1
1,2,4-Trichlorobenzene	ND	0.050	--	ND	0.371	--		1
Naphthalene	0.055	0.050	--	0.288	0.262	--		1
Hexachlorobutadiene	ND	0.050	--	ND	0.533	--		1

Internal Standard	% Recovery	Qualifier	Acceptance Criteria
1,4-difluorobenzene	81		60-140
bromochloromethane	87		60-140
chlorobenzene-d5	90		60-140

Project Name: NBHS IRA O&M
Project Number: 115058

Lab Number: L1510617
Report Date: 05/26/15

Method Blank Analysis
Batch Quality Control

Analytical Method: 101,TO-15
Analytical Date: 05/19/15 14:29

Parameter	ppbV Results	ppbV RL	ppbV MDL	ug/m3 Results	ug/m3 RL	ug/m3 MDL	Qualifier	Dilution Factor
MCP Volatile Organics in Air - Mansfield Lab for sample(s): 01 Batch: WG786391-4								
Chlorodifluoromethane	ND	0.200	--	ND	0.707	--		1
Propylene	ND	0.500	--	ND	0.861	--		1
Dichlorodifluoromethane	ND	0.200	--	ND	0.989	--		1
Chloromethane	ND	0.200	--	ND	0.413	--		1
1,2-Dichloro-1,1,2,2-tetrafluoroethane	ND	0.200	--	ND	1.40	--		1
Methanol	ND	5.00	--	ND	6.55	--		1
Vinyl chloride	ND	0.200	--	ND	0.511	--		1
1,3-Butadiene	ND	0.200	--	ND	0.442	--		1
Butane	ND	0.200	--	ND	0.475	--		1
Bromomethane	ND	0.200	--	ND	0.777	--		1
Chloroethane	ND	0.200	--	ND	0.528	--		1
Ethyl Alcohol	ND	2.50	--	ND	4.71	--		1
Dichlorofluoromethane	ND	0.200	--	ND	0.842	--		1
Vinyl bromide	ND	0.200	--	ND	0.874	--		1
Acrolein	ND	0.500	--	ND	1.15	--		1
Acetone	ND	1.00	--	ND	2.38	--		1
Acetonitrile	ND	0.200	--	ND	0.336	--		1
Trichlorofluoromethane	ND	0.200	--	ND	1.12	--		1
iso-Propyl Alcohol	ND	0.500	--	ND	1.23	--		1
Acrylonitrile	ND	0.500	--	ND	1.09	--		1
Pentane	ND	0.200	--	ND	0.590	--		1
Ethyl ether	ND	0.200	--	ND	0.606	--		1
1,1-Dichloroethene	ND	0.200	--	ND	0.793	--		1
tert-Butyl Alcohol	ND	0.500	--	ND	1.52	--		1
Methylene chloride	ND	0.500	--	ND	1.74	--		1

Project Name: NBHS IRA O&M
Project Number: 115058

Lab Number: L1510617
Report Date: 05/26/15

Method Blank Analysis
Batch Quality Control

Analytical Method: 101,TO-15
Analytical Date: 05/19/15 14:29

Parameter	ppbV Results	ppbV RL	ppbV MDL	ug/m3 Results	ug/m3 RL	ug/m3 MDL	Qualifier	Dilution Factor
MCP Volatile Organics in Air - Mansfield Lab for sample(s): 01 Batch: WG786391-4								
3-Chloropropene	ND	0.200	--	ND	0.626	--		1
Carbon disulfide	ND	0.200	--	ND	0.623	--		1
1,1,2-Trichloro-1,2,2-Trifluoroethane	ND	0.200	--	ND	1.53	--		1
trans-1,2-Dichloroethene	ND	0.200	--	ND	0.793	--		1
1,1-Dichloroethane	ND	0.200	--	ND	0.809	--		1
Methyl tert butyl ether	ND	0.200	--	ND	0.721	--		1
Vinyl acetate	ND	0.200	--	ND	0.704	--		1
2-Butanone	ND	0.500	--	ND	1.47	--		1
cis-1,2-Dichloroethene	ND	0.200	--	ND	0.793	--		1
Ethyl Acetate	ND	0.500	--	ND	1.80	--		1
Chloroform	ND	0.200	--	ND	0.977	--		1
Tetrahydrofuran	ND	0.500	--	ND	1.47	--		1
2,2-Dichloropropane	ND	0.200	--	ND	0.924	--		1
1,2-Dichloroethane	ND	0.200	--	ND	0.809	--		1
n-Hexane	ND	0.200	--	ND	0.705	--		1
Isopropyl Ether	ND	0.200	--	ND	0.836	--		1
Ethyl-Tert-Butyl-Ether	ND	0.200	--	ND	0.836	--		1
1,1,1-Trichloroethane	ND	0.200	--	ND	1.09	--		1
1,1-Dichloropropene	ND	0.200	--	ND	0.908	--		1
Benzene	ND	0.200	--	ND	0.639	--		1
Carbon tetrachloride	ND	0.200	--	ND	1.26	--		1
Cyclohexane	ND	0.200	--	ND	0.688	--		1
Tertiary-Amyl Methyl Ether	ND	0.200	--	ND	0.836	--		1
Dibromomethane	ND	0.200	--	ND	1.42	--		1
1,2-Dichloropropane	ND	0.200	--	ND	0.924	--		1

Project Name: NBHS IRA O&M
Project Number: 115058

Lab Number: L1510617
Report Date: 05/26/15

Method Blank Analysis
Batch Quality Control

Analytical Method: 101,TO-15
Analytical Date: 05/19/15 14:29

Parameter	ppbV Results	ppbV RL	ppbV MDL	ug/m3 Results	ug/m3 RL	ug/m3 MDL	Qualifier	Dilution Factor
MCP Volatile Organics in Air - Mansfield Lab for sample(s): 01 Batch: WG786391-4								
Bromodichloromethane	ND	0.200	--	ND	1.34	--		1
1,4-Dioxane	ND	0.200	--	ND	0.721	--		1
Trichloroethene	ND	0.200	--	ND	1.07	--		1
2,2,4-Trimethylpentane	ND	0.200	--	ND	0.934	--		1
Methyl Methacrylate	ND	0.500	--	ND	2.05	--		1
Heptane	ND	0.200	--	ND	0.820	--		1
cis-1,3-Dichloropropene	ND	0.200	--	ND	0.908	--		1
4-Methyl-2-pentanone	ND	0.500	--	ND	2.05	--		1
trans-1,3-Dichloropropene	ND	0.200	--	ND	0.908	--		1
1,1,2-Trichloroethane	ND	0.200	--	ND	1.09	--		1
Toluene	ND	0.200	--	ND	0.754	--		1
1,3-Dichloropropane	ND	0.200	--	ND	0.924	--		1
2-Hexanone	ND	0.200	--	ND	0.820	--		1
Dibromochloromethane	ND	0.200	--	ND	1.70	--		1
1,2-Dibromoethane	ND	0.200	--	ND	1.54	--		1
Butyl Acetate	ND	0.500	--	ND	2.38	--		1
Octane	ND	0.200	--	ND	0.934	--		1
Tetrachloroethene	ND	0.200	--	ND	1.36	--		1
1,1,1,2-Tetrachloroethane	ND	0.200	--	ND	1.37	--		1
Chlorobenzene	ND	0.200	--	ND	0.921	--		1
Ethylbenzene	ND	0.200	--	ND	0.869	--		1
p/m-Xylene	ND	0.400	--	ND	1.74	--		1
Bromoform	ND	0.200	--	ND	2.07	--		1
Styrene	ND	0.200	--	ND	0.852	--		1
1,1,2,2-Tetrachloroethane	ND	0.200	--	ND	1.37	--		1

Project Name: NBHS IRA O&M
Project Number: 115058
Lab Number: L1510617
Report Date: 05/26/15

Method Blank Analysis
Batch Quality Control

Analytical Method: 101,TO-15
Analytical Date: 05/19/15 14:29

Parameter	ppbV Results	ppbV RL	ppbV MDL	ug/m3 Results	ug/m3 RL	ug/m3 MDL	Qualifier	Dilution Factor
MCP Volatile Organics in Air - Mansfield Lab for sample(s): 01 Batch: WG786391-4								
o-Xylene	ND	0.200	--	ND	0.869	--		1
1,2,3-Trichloropropane	ND	0.200	--	ND	1.21	--		1
Nonane (C9)	ND	0.200	--	ND	1.05	--		1
Isopropylbenzene	ND	0.200	--	ND	0.983	--		1
Bromobenzene	ND	0.200	--	ND	0.793	--		1
o-Chlorotoluene	ND	0.200	--	ND	1.04	--		1
n-Propylbenzene	ND	0.200	--	ND	0.983	--		1
p-Chlorotoluene	ND	0.200	--	ND	1.04	--		1
4-Ethyltoluene	ND	0.200	--	ND	0.983	--		1
1,3,5-Trimethylbenzene	ND	0.200	--	ND	0.983	--		1
tert-Butylbenzene	ND	0.200	--	ND	1.10	--		1
1,2,4-Trimethylbenzene	ND	0.200	--	ND	0.983	--		1
Decane (C10)	ND	0.200	--	ND	1.16	--		1
Benzyl chloride	ND	0.200	--	ND	1.04	--		1
1,3-Dichlorobenzene	ND	0.200	--	ND	1.20	--		1
1,4-Dichlorobenzene	ND	0.200	--	ND	1.20	--		1
sec-Butylbenzene	ND	0.200	--	ND	1.10	--		1
p-Isopropyltoluene	ND	0.200	--	ND	1.10	--		1
1,2-Dichlorobenzene	ND	0.200	--	ND	1.20	--		1
n-Butylbenzene	ND	0.200	--	ND	1.10	--		1
1,2-Dibromo-3-chloropropane	ND	0.200	--	ND	1.93	--		1
Undecane	ND	0.200	--	ND	1.28	--		1
Dodecane (C12)	ND	0.200	--	ND	1.39	--		1
1,2,4-Trichlorobenzene	ND	0.200	--	ND	1.48	--		1
Naphthalene	ND	0.200	--	ND	1.05	--		1

Project Name: NBHS IRA O&M
Project Number: 115058

Lab Number: L1510617
Report Date: 05/26/15

Method Blank Analysis
Batch Quality Control

Analytical Method: 101,TO-15
Analytical Date: 05/19/15 14:29

Parameter	ppbV Results	ppbV RL	ppbV MDL	ug/m3 Results	ug/m3 RL	ug/m3 MDL	Qualifier	Dilution Factor
MCP Volatile Organics in Air - Mansfield Lab for sample(s): 01 Batch: WG786391-4								
1,2,3-Trichlorobenzene	ND	0.200	--	ND	1.48	--		1
Hexachlorobutadiene	ND	0.200	--	ND	2.13	--		1

Project Name: NBHS IRA O&M
Project Number: 115058

Lab Number: L1510617
Report Date: 05/26/15

Method Blank Analysis
Batch Quality Control

Analytical Method: 101,TO15-SIM
Analytical Date: 05/19/15 14:29

Parameter	ppbV Results	ppbV RL	ppbV MDL	ug/m3 Results	ug/m3 RL	ug/m3 MDL	Qualifier	Dilution Factor
MCP Volatile Organics in Air by SIM - Mansfield Lab for sample(s): 02 Batch: WG786392-4								
Dichlorodifluoromethane	ND	0.200	--	ND	0.989	--		1
Chloromethane	ND	0.500	--	ND	0.500	--		1
Freon-114	ND	0.050	--	ND	0.349	--		1
Vinyl chloride	ND	0.020	--	ND	0.051	--		1
1,3-Butadiene	ND	0.020	--	ND	0.044	--		1
Bromomethane	ND	0.020	--	ND	0.078	--		1
Chloroethane	ND	0.020	--	ND	0.053	--		1
Acetone	ND	1.00	--	ND	2.38	--		1
Trichlorofluoromethane	ND	0.050	--	ND	0.281	--		1
Acrylonitrile	ND	0.500	--	ND	1.09	--		1
1,1-Dichloroethene	ND	0.020	--	ND	0.079	--		1
Methylene chloride	ND	1.40	--	ND	1.74	--		1
Freon-113	ND	0.050	--	ND	0.383	--		1
Halothane	ND	0.050	--	ND	0.404	--		1
trans-1,2-Dichloroethene	ND	0.020	--	ND	0.079	--		1
1,1-Dichloroethane	ND	0.020	--	ND	0.081	--		1
Methyl tert butyl ether	ND	0.020	--	ND	0.072	--		1
2-Butanone	ND	0.500	--	ND	1.47	--		1
cis-1,2-Dichloroethene	ND	0.020	--	ND	0.079	--		1
Chloroform	ND	0.020	--	ND	0.098	--		1
1,2-Dichloroethane	ND	0.020	--	ND	0.081	--		1
1,1,1-Trichloroethane	ND	0.020	--	ND	0.109	--		1
Benzene	ND	0.100	--	ND	0.319	--		1
Carbon tetrachloride	ND	0.020	--	ND	0.126	--		1
1,2-Dichloropropane	ND	0.020	--	ND	0.092	--		1

Project Name: NBHS IRA O&M
Project Number: 115058

Lab Number: L1510617
Report Date: 05/26/15

Method Blank Analysis
Batch Quality Control

Analytical Method: 101,TO15-SIM
Analytical Date: 05/19/15 14:29

Parameter	ppbV Results	ppbV RL	ppbV MDL	ug/m3 Results	ug/m3 RL	ug/m3 MDL	Qualifier	Dilution Factor
MCP Volatile Organics in Air by SIM - Mansfield Lab for sample(s): 02 Batch: WG786392-4								
Bromodichloromethane	ND	0.020	--	ND	0.134	--		1
1,4-Dioxane	ND	0.100	--	ND	0.360	--		1
Trichloroethene	ND	0.020	--	ND	0.107	--		1
cis-1,3-Dichloropropene	ND	0.020	--	ND	0.091	--		1
4-Methyl-2-pentanone	ND	0.500	--	ND	2.05	--		1
trans-1,3-Dichloropropene	ND	0.020	--	ND	0.091	--		1
1,1,2-Trichloroethane	ND	0.020	--	ND	0.109	--		1
Toluene	ND	0.050	--	ND	0.188	--		1
Dibromochloromethane	ND	0.020	--	ND	0.170	--		1
1,2-Dibromoethane	ND	0.020	--	ND	0.154	--		1
Tetrachloroethene	ND	0.020	--	ND	0.136	--		1
1,1,1,2-Tetrachloroethane	ND	0.020	--	ND	0.137	--		1
Chlorobenzene	ND	0.020	--	ND	0.092	--		1
Ethylbenzene	ND	0.020	--	ND	0.087	--		1
p/m-Xylene	ND	0.040	--	ND	0.174	--		1
Bromoform	ND	0.020	--	ND	0.207	--		1
Styrene	ND	0.020	--	ND	0.085	--		1
1,1,2,2-Tetrachloroethane	ND	0.020	--	ND	0.137	--		1
o-Xylene	ND	0.020	--	ND	0.087	--		1
Isopropylbenzene	ND	0.500	--	ND	0.983	--		1
1,3,5-Trimethybenzene	ND	0.020	--	ND	0.098	--		1
1,2,4-Trimethylbenzene	ND	0.020	--	ND	0.098	--		1
1,3-Dichlorobenzene	ND	0.020	--	ND	0.120	--		1
1,4-Dichlorobenzene	ND	0.020	--	ND	0.120	--		1
sec-Butylbenzene	ND	0.500	--	ND	1.10	--		1

Project Name: NBHS IRA O&M
Project Number: 115058

Lab Number: L1510617
Report Date: 05/26/15

Method Blank Analysis
Batch Quality Control

Analytical Method: 101,TO15-SIM
Analytical Date: 05/19/15 14:29

Parameter	ppbV Results	ppbV RL	ppbV MDL	ug/m3 Results	ug/m3 RL	ug/m3 MDL	Qualifier	Dilution Factor
MCP Volatile Organics in Air by SIM - Mansfield Lab for sample(s): 02 Batch: WG786392-4								
p-Isopropyltoluene	ND	0.500	--	ND	1.10	--		1
1,2-Dichlorobenzene	ND	0.020	--	ND	0.120	--		1
n-Butylbenzene	ND	0.500	--	ND	1.10	--		1
1,2,4-Trichlorobenzene	ND	0.050	--	ND	0.371	--		1
Naphthalene	ND	0.050	--	ND	0.262	--		1
1,2,3-Trichlorobenzene	ND	0.050	--	ND	0.371	--		1
Hexachlorobutadiene	ND	0.050	--	ND	0.533	--		1

Lab Control Sample Analysis
Batch Quality Control

Project Name: NBHS IRA O&M
Project Number: 115058

Lab Number: L1510617
Report Date: 05/26/15

Parameter	LCS %Recovery	Qual	LCSD %Recovery	Qual	%Recovery Limits	RPD	Qual	RPD Limits
MCP Volatile Organics in Air - Mansfield Lab Associated sample(s): 01 Batch: WG786391-3								
Chlorodifluoromethane	85		-		70-130	-		
Propylene	100		-		70-130	-		
Dichlorodifluoromethane	83		-		70-130	-		
Chloromethane	87		-		70-130	-		
1,2-Dichloro-1,1,2,2-tetrafluoroethane	107		-		70-130	-		
Methanol	83		-		70-130	-		
Vinyl chloride	95		-		70-130	-		
1,3-Butadiene	100		-		70-130	-		
Bromomethane	101		-		70-130	-		
Chloroethane	99		-		70-130	-		
Ethyl Alcohol	86		-		70-130	-		
Dichlorofluoromethane	94		-		70-130	-		
Vinyl bromide	98		-		70-130	-		
Acrolein	84		-		70-130	-		
Acetone	97		-		50-150	-		
Acetonitrile	83		-		70-130	-		
Trichlorofluoromethane	109		-		70-130	-		
iso-Propyl Alcohol	98		-		70-130	-		
Acrylonitrile	84		-		70-130	-		
Pentane	84		-		70-130	-		
Ethyl ether	79		-		70-130	-		

Lab Control Sample Analysis
Batch Quality Control

Project Name: NBHS IRA O&M
Project Number: 115058

Lab Number: L1510617
Report Date: 05/26/15

Parameter	LCS %Recovery	Qual	LCSD %Recovery	Qual	%Recovery Limits	RPD	Qual	RPD Limits
MCP Volatile Organics in Air - Mansfield Lab Associated sample(s): 01 Batch: WG786391-3								
1,1-Dichloroethene	96		-		70-130	-		
tert-Butyl Alcohol	96		-		70-130	-		
Methylene chloride	96		-		70-130	-		
3-Chloropropene	97		-		70-130	-		
Carbon disulfide	94		-		70-130	-		
1,1,2-Trichloro-1,2,2-Trifluoroethane	106		-		70-130	-		
trans-1,2-Dichloroethene	90		-		70-130	-		
1,1-Dichloroethane	97		-		70-130	-		
Methyl tert butyl ether	94		-		70-130	-		
Vinyl acetate	110		-		70-130	-		
2-Butanone	104		-		70-130	-		
cis-1,2-Dichloroethene	114		-		70-130	-		
Ethyl Acetate	112		-		70-130	-		
Chloroform	105		-		70-130	-		
Tetrahydrofuran	89		-		70-130	-		
2,2-Dichloropropane	93		-		70-130	-		
1,2-Dichloroethane	103		-		70-130	-		
n-Hexane	81		-		70-130	-		
Isopropyl Ether	78		-		70-130	-		
Ethyl-Tert-Butyl-Ether	77		-		70-130	-		
1,1,1-Trichloroethane	92		-		70-130	-		

Lab Control Sample Analysis
Batch Quality Control

Project Name: NBHS IRA O&M
Project Number: 115058

Lab Number: L1510617
Report Date: 05/26/15

Parameter	LCS %Recovery	Qual	LCSD %Recovery	Qual	%Recovery Limits	RPD	Qual	RPD Limits
MCP Volatile Organics in Air - Mansfield Lab Associated sample(s): 01 Batch: WG786391-3								
1,1-Dichloropropene	87		-		70-130	-		
Benzene	86		-		70-130	-		
Carbon tetrachloride	97		-		70-130	-		
Cyclohexane	81		-		70-130	-		
Tertiary-Amyl Methyl Ether	82		-		70-130	-		
Dibromomethane	89		-		70-130	-		
1,2-Dichloropropane	90		-		70-130	-		
Bromodichloromethane	94		-		70-130	-		
1,4-Dioxane	91		-		50-150	-		
Trichloroethene	97		-		70-130	-		
2,2,4-Trimethylpentane	83		-		70-130	-		
Methyl Methacrylate[1]	88		-		70-130	-		
Heptane	77		-		70-130	-		
cis-1,3-Dichloropropene	98		-		70-130	-		
4-Methyl-2-pentanone	86		-		70-130	-		
trans-1,3-Dichloropropene	85		-		70-130	-		
1,1,2-Trichloroethane	98		-		70-130	-		
Toluene	97		-		70-130	-		
1,3-Dichloropropane	90		-		70-130	-		
2-Hexanone	97		-		70-130	-		
Dibromochloromethane	107		-		70-130	-		

Lab Control Sample Analysis
Batch Quality Control

Project Name: NBHS IRA O&M
Project Number: 115058

Lab Number: L1510617
Report Date: 05/26/15

Parameter	LCS %Recovery	Qual	LCSD %Recovery	Qual	%Recovery Limits	RPD	Qual	RPD Limits
MCP Volatile Organics in Air - Mansfield Lab Associated sample(s): 01 Batch: WG786391-3								
1,2-Dibromoethane	110		-		70-130	-		
Octane	88		-		70-130	-		
Tetrachloroethene	106		-		70-130	-		
1,1,1,2-Tetrachloroethane	100		-		70-130	-		
Chlorobenzene	103		-		70-130	-		
Ethylbenzene	102		-		70-130	-		
p/m-Xylene	101		-		70-130	-		
Bromoform	108		-		70-130	-		
Styrene	104		-		70-130	-		
1,1,2,2-Tetrachloroethane	102		-		70-130	-		
o-Xylene	100		-		70-130	-		
1,2,3-Trichloropropane	94		-		70-130	-		
Nonane (C9)	83		-		70-130	-		
Isopropylbenzene	101		-		70-130	-		
Bromobenzene	95		-		70-130	-		
o-Chlorotoluene	98		-		70-130	-		
n-Propylbenzene	95		-		70-130	-		
p-Chlorotoluene	94		-		70-130	-		
4-Ethyltoluene	96		-		70-130	-		
1,3,5-Trimethylbenzene	94		-		70-130	-		
tert-Butylbenzene	98		-		70-130	-		

Lab Control Sample Analysis
Batch Quality Control

Project Name: NBHS IRA O&M
Project Number: 115058

Lab Number: L1510617
Report Date: 05/26/15

Parameter	LCS %Recovery	Qual	LCSD %Recovery	Qual	%Recovery Limits	RPD	Qual	RPD Limits
MCP Volatile Organics in Air - Mansfield Lab Associated sample(s): 01 Batch: WG786391-3								
1,2,4-Trimethylbenzene	106		-		70-130	-		
Decane (C10)	89		-		70-130	-		
Benzyl chloride	102		-		70-130	-		
1,3-Dichlorobenzene	106		-		70-130	-		
1,4-Dichlorobenzene	104		-		70-130	-		
sec-Butylbenzene	97		-		70-130	-		
p-Isopropyltoluene	92		-		70-130	-		
1,2-Dichlorobenzene	109		-		70-130	-		
n-Butylbenzene	104		-		70-130	-		
1,2-Dibromo-3-chloropropane	97		-		70-130	-		
Undecane	102		-		70-130	-		
Dodecane (C12)	121		-		70-130	-		
1,2,4-Trichlorobenzene	126		-		50-150	-		
Naphthalene	119		-		50-150	-		
1,2,3-Trichlorobenzene	127		-		70-130	-		
Hexachlorobutadiene	125		-		50-150	-		

Lab Control Sample Analysis
Batch Quality Control

Project Name: NBHS IRA O&M
Project Number: 115058

Lab Number: L1510617
Report Date: 05/26/15

Parameter	LCS %Recovery	Qual	LCSD %Recovery	Qual	%Recovery Limits	RPD	Qual	RPD Limits
MCP Volatile Organics in Air by SIM - Mansfield Lab Associated sample(s): 02 Batch: WG786392-3								
Propylene	93		-		70-130	-		
Dichlorodifluoromethane	101		-		70-130	-		
Chloromethane	90		-		70-130	-		
1,2-Dichloro-1,1,2,2-tetrafluoroethane	102		-		70-130	-		
Vinyl chloride	93		-		70-130	-		
1,3-Butadiene	94		-		70-130	-		
Bromomethane	101		-		70-130	-		
Chloroethane	87		-		70-130	-		
Ethyl Alcohol	86		-		70-130	-		
Vinyl bromide	96		-		70-130	-		
Acetone	98		-		50-150	-		
Trichlorofluoromethane	104		-		70-130	-		
iso-Propyl Alcohol	102		-		70-130	-		
1,1-Dichloroethene	96		-		70-130	-		
Methylene chloride	95		-		70-130	-		
3-Chloropropene	92		-		70-130	-		
Carbon disulfide	86		-		70-130	-		
1,1,2-Trichloro-1,2,2-Trifluoroethane	101		-		70-130	-		
Halothane	90		-		70-130	-		
trans-1,2-Dichloroethene	86		-		70-130	-		
1,1-Dichloroethane	97		-		70-130	-		

Lab Control Sample Analysis
Batch Quality Control

Project Name: NBHS IRA O&M
Project Number: 115058

Lab Number: L1510617
Report Date: 05/26/15

Parameter	LCS %Recovery	Qual	LCSD %Recovery	Qual	%Recovery Limits	RPD	Qual	RPD Limits
MCP Volatile Organics in Air by SIM - Mansfield Lab Associated sample(s): 02 Batch: WG786392-3								
Methyl tert butyl ether	93		-		70-130	-		
Vinyl acetate	113		-		70-130	-		
2-Butanone	103		-		70-130	-		
cis-1,2-Dichloroethene	108		-		70-130	-		
Ethyl Acetate	108		-		70-130	-		
Chloroform	104		-		70-130	-		
Tetrahydrofuran	87		-		70-130	-		
1,2-Dichloroethane	99		-		70-130	-		
n-Hexane	81		-		70-130	-		
1,1,1-Trichloroethane	91		-		70-130	-		
Benzene	89		-		70-130	-		
Carbon tetrachloride	95		-		70-130	-		
Cyclohexane	83		-		70-130	-		
1,2-Dichloropropane	90		-		70-130	-		
Bromodichloromethane	91		-		70-130	-		
1,4-Dioxane	94		-		50-150	-		
Trichloroethene	98		-		70-130	-		
2,2,4-Trimethylpentane	85		-		70-130	-		
cis-1,3-Dichloropropene	100		-		70-130	-		
4-Methyl-2-pentanone	95		-		70-130	-		
trans-1,3-Dichloropropene	89		-		70-130	-		

Lab Control Sample Analysis
Batch Quality Control

Project Name: NBHS IRA O&M
Project Number: 115058

Lab Number: L1510617
Report Date: 05/26/15

Parameter	LCS %Recovery	Qual	LCSD %Recovery	Qual	%Recovery Limits	RPD	Qual	RPD Limits
MCP Volatile Organics in Air by SIM - Mansfield Lab Associated sample(s): 02 Batch: WG786392-3								
1,1,2-Trichloroethane	98		-		70-130	-		
Toluene	99		-		70-130	-		
2-Hexanone	108		-		70-130	-		
Dibromochloromethane	105		-		70-130	-		
1,2-Dibromoethane	109		-		70-130	-		
Tetrachloroethene	106		-		70-130	-		
Chlorobenzene	105		-		70-130	-		
Ethylbenzene	104		-		70-130	-		
p/m-Xylene	105		-		70-130	-		
Bromoform	111		-		70-130	-		
Styrene	111		-		70-130	-		
1,1,2,2-Tetrachloroethane	104		-		70-130	-		
o-Xylene	105		-		70-130	-		
1,3,5-Trimethylbenzene	93		-		70-130	-		
1,2,4-Trimethylbenzene	111		-		70-130	-		
Benzyl chloride	106		-		70-130	-		
1,3-Dichlorobenzene	114		-		70-130	-		
1,4-Dichlorobenzene	111		-		70-130	-		
1,2-Dichlorobenzene	115		-		70-130	-		
1,2,4-Trichlorobenzene	136		-		50-150	-		
Naphthalene	127		-		50-150	-		

Lab Control Sample Analysis
Batch Quality Control

Project Name: NBHS IRA O&M
Project Number: 115058

Lab Number: L1510617
Report Date: 05/26/15

Parameter	LCS %Recovery	Qual	LCSD %Recovery	Qual	%Recovery Limits	RPD	Qual	RPD Limits
MCP Volatile Organics in Air by SIM - Mansfield Lab Associated sample(s): 02 Batch: WG786392-3								
1,2,3-Trichlorobenzene	**133**	Q	-		70-130	-		
Hexachlorobutadiene	134		-		50-150	-		

Lab Duplicate Analysis
Batch Quality Control

Project Name: NBHS IRA O&M
Project Number: 115058

Lab Number: L1510617
Report Date: 05/26/15

Parameter	Native Sample	Duplicate Sample	Units	RPD	Qual	RPD Limits
MCP Volatile Organics in Air - Mansfield Lab Associated sample(s): 01 QC Batch ID: WG786391-5 QC Sample: L1509799-01 Client ID: DUP Sample						
Chlorodifluoromethane	3.99	4.05	ppbV	1		25
Propylene	ND	ND	ppbV	NC		25
Dichlorodifluoromethane	0.350	0.703	ppbV	**67**	Q	25
Chloromethane	0.751	0.737	ppbV	2		25
1,2-Dichloro-1,1,2,2-tetrafluoroethane	ND	ND	ppbV	NC		25
Methanol	35.0	32.5	ppbV	7		25
Vinyl chloride	ND	ND	ppbV	NC		25
1,3-Butadiene	ND	ND	ppbV	NC		25
Butane	0.903	0.892	ppbV	1		25
Bromomethane	ND	ND	ppbV	NC		25
Chloroethane	ND	ND	ppbV	NC		25
Ethyl Alcohol	48.5	44.6	ppbV	8		25
Dichlorofluoromethane	ND	ND	ppbV	NC		25
Vinyl bromide	ND	ND	ppbV	NC		25
Acrolein	ND	ND	ppbV	NC		25
Acetone	8.60	8.24	ppbV	4		25
Acetonitrile	ND	ND	ppbV	NC		25
Trichlorofluoromethane	0.268	0.258	ppbV	4		25
iso-Propyl Alcohol	2.68	2.59	ppbV	3		25

Lab Duplicate Analysis
Batch Quality Control

Project Name: NBHS IRA O&M
Project Number: 115058

Lab Number: L1510617
Report Date: 05/26/15

Parameter	Native Sample	Duplicate Sample	Units	RPD	RPD Limits
MCP Volatile Organics in Air - Mansfield Lab Associated sample(s): 01 QC Batch ID: WG786391-5 QC Sample: L1509799-01 Client ID: DUP Sample					
Acrylonitrile	ND	ND	ppbV	NC	25
Pentane	0.244	0.225	ppbV	8	25
Ethyl ether	ND	ND	ppbV	NC	25
1,1-Dichloroethene	ND	ND	ppbV	NC	25
tert-Butyl Alcohol	ND	ND	ppbV	NC	25
Methylene chloride	0.531	0.513	ppbV	3	25
3-Chloropropene	ND	ND	ppbV	NC	25
Carbon disulfide	ND	ND	ppbV	NC	25
1,1,2-Trichloro-1,2,2-Trifluoroethane	ND	ND	ppbV	NC	25
trans-1,2-Dichloroethene	ND	ND	ppbV	NC	25
1,1-Dichloroethane	ND	ND	ppbV	NC	25
Methyl tert butyl ether	ND	ND	ppbV	NC	25
Vinyl acetate	ND	ND	ppbV	NC	25
2-Butanone	ND	ND	ppbV	NC	25
cis-1,2-Dichloroethene	ND	ND	ppbV	NC	25
Ethyl Acetate	ND	ND	ppbV	NC	25
Chloroform	ND	ND	ppbV	NC	25
Tetrahydrofuran	ND	ND	ppbV	NC	25
2,2-Dichloropropane	ND	ND	ppbV	NC	25

Lab Duplicate Analysis
Batch Quality Control

Project Name: NBHS IRA O&M
Project Number: 115058

Lab Number: L1510617
Report Date: 05/26/15

Parameter	Native Sample	Duplicate Sample	Units	RPD	RPD Limits
MCP Volatile Organics in Air - Mansfield Lab Associated sample(s): 01 QC Batch ID: WG786391-5 QC Sample: L1509799-01 Client ID: DUP Sample					
1,2-Dichloroethane	ND	ND	ppbV	NC	25
n-Hexane	ND	ND	ppbV	NC	25
Isopropyl Ether	ND	ND	ppbV	NC	25
Ethyl-Tert-Butyl-Ether	ND	ND	ppbV	NC	25
1,1,1-Trichloroethane	ND	ND	ppbV	NC	25
1,1-Dichloropropene	ND	ND	ppbV	NC	25
Benzene	ND	ND	ppbV	NC	25
Carbon tetrachloride	ND	ND	ppbV	NC	25
Cyclohexane	0.340	0.355	ppbV	4	25
Tertiary-Amyl Methyl Ether	ND	ND	ppbV	NC	25
Dibromomethane	ND	ND	ppbV	NC	25
1,2-Dichloropropane	ND	ND	ppbV	NC	25
Bromodichloromethane	ND	ND	ppbV	NC	25
1,4-Dioxane	ND	ND	ppbV	NC	25
Trichloroethene	ND	ND	ppbV	NC	25
2,2,4-Trimethylpentane	ND	ND	ppbV	NC	25
Methyl Methacrylate[1]	ND	ND	ppbV	NC	25
Heptane	ND	ND	ppbV	NC	25
cis-1,3-Dichloropropene	ND	ND	ppbV	NC	25

Lab Duplicate Analysis
Batch Quality Control

Project Name: NBHS IRA O&M
Project Number: 115058

Lab Number: L1510617
Report Date: 05/26/15

Parameter	Native Sample	Duplicate Sample	Units	RPD	RPD Limits
MCP Volatile Organics in Air - Mansfield Lab Associated sample(s): 01 QC Batch ID: WG786391-5 QC Sample: L1509799-01 Client ID: DUP Sample					
4-Methyl-2-pentanone	ND	ND	ppbV	NC	25
trans-1,3-Dichloropropene	ND	ND	ppbV	NC	25
1,1,2-Trichloroethane	ND	ND	ppbV	NC	25
Toluene	0.292	0.281	ppbV	4	25
1,3-Dichloropropane	ND	ND	ppbV	NC	25
2-Hexanone	ND	ND	ppbV	NC	25
Dibromochloromethane	ND	ND	ppbV	NC	25
1,2-Dibromoethane	ND	ND	ppbV	NC	25
Butyl Acetate	ND	ND	ppbV	NC	25
Octane	ND	ND	ppbV	NC	25
Tetrachloroethene	ND	ND	ppbV	NC	25
1,1,1,2-Tetrachloroethane	ND	ND	ppbV	NC	25
Chlorobenzene	ND	ND	ppbV	NC	25
Ethylbenzene	ND	ND	ppbV	NC	25
p/m-Xylene	ND	ND	ppbV	NC	25
Bromoform	ND	ND	ppbV	NC	25
Styrene	ND	ND	ppbV	NC	25
1,1,2,2-Tetrachloroethane	ND	ND	ppbV	NC	25
o-Xylene	ND	ND	ppbV	NC	25

Lab Duplicate Analysis
Batch Quality Control

Project Name: NBHS IRA O&M
Project Number: 115058

Lab Number: L1510617
Report Date: 05/26/15

Parameter	Native Sample	Duplicate Sample	Units	RPD	RPD Limits
MCP Volatile Organics in Air - Mansfield Lab Associated sample(s): 01 QC Batch ID: WG786391-5 QC Sample: L1509799-01 Client ID: DUP Sample					
1,2,3-Trichloropropane	ND	ND	ppbV	NC	25
Nonane (C9)	ND	ND	ppbV	NC	25
Isopropylbenzene	ND	ND	ppbV	NC	25
Bromobenzene	ND	ND	ppbV	NC	25
o-Chlorotoluene	ND	ND	ppbV	NC	25
n-Propylbenzene	ND	ND	ppbV	NC	25
p-Chlorotoluene	ND	ND	ppbV	NC	25
4-Ethyltoluene	ND	ND	ppbV	NC	25
1,3,5-Trimethylbenzene	ND	ND	ppbV	NC	25
tert-Butylbenzene	ND	ND	ppbV	NC	25
1,2,4-Trimethylbenzene	ND	ND	ppbV	NC	25
Decane (C10)	ND	ND	ppbV	NC	25
Benzyl chloride	ND	ND	ppbV	NC	25
1,3-Dichlorobenzene	ND	ND	ppbV	NC	25
1,4-Dichlorobenzene	ND	ND	ppbV	NC	25
sec-Butylbenzene	ND	ND	ppbV	NC	25
p-Isopropyltoluene	ND	ND	ppbV	NC	25
1,2-Dichlorobenzene	ND	ND	ppbV	NC	25
n-Butylbenzene	ND	ND	ppbV	NC	25

Lab Duplicate Analysis
Batch Quality Control

Project Name: NBHS IRA O&M
Project Number: 115058

Lab Number: L1510617
Report Date: 05/26/15

Parameter	Native Sample	Duplicate Sample	Units	RPD	RPD Limits
MCP Volatile Organics in Air - Mansfield Lab Associated sample(s): 01 QC Batch ID: WG786391-5 QC Sample: L1509799-01 Client ID: DUP Sample					
1,2-Dibromo-3-chloropropane	ND	ND	ppbV	NC	25
Undecane	ND	ND	ppbV	NC	25
Dodecane (C12)	ND	ND	ppbV	NC	25
1,2,4-Trichlorobenzene	ND	ND	ppbV	NC	25
Naphthalene	ND	ND	ppbV	NC	25
1,2,3-Trichlorobenzene	ND	ND	ppbV	NC	25
Hexachlorobutadiene	ND	ND	ppbV	NC	25

Lab Duplicate Analysis
Batch Quality Control

Project Name: NBHS IRA O&M
Project Number: 115058

Lab Number: L1510617
Report Date: 05/26/15

Parameter	Native Sample	Duplicate Sample	Units	RPD		RPD Limits
MCP Volatile Organics in Air by SIM - Mansfield Lab Associated sample(s): 02 QC Batch ID: WG786392-5 QC Sample: L1509799-01 Client ID: DUP Sample						
Propylene	ND	ND	ppbV	NC		25
Dichlorodifluoromethane	0.320	0.682	ppbV	**72**	Q	25
Chloromethane	0.766	0.748	ppbV	2		25
1,2-Dichloro-1,1,2,2-tetrafluoroethane	ND	ND	ppbV	NC		25
Vinyl chloride	ND	ND	ppbV	NC		25
1,3-Butadiene	ND	ND	ppbV	NC		25
Bromomethane	ND	ND	ppbV	NC		25
Chloroethane	ND	ND	ppbV	NC		25
Ethyl Alcohol	45.0	43.4	ppbV	4		25
Vinyl bromide	ND	ND	ppbV	NC		25
Acetone	8.32	8.16	ppbV	2		25
Trichlorofluoromethane	0.258	0.255	ppbV	1		25
iso-Propyl Alcohol	4.33	4.19	ppbV	3		25
Acrylonitrile	ND	ND	ppbV	NC		25
1,1-Dichloroethene	ND	ND	ppbV	NC		25
Methylene chloride	0.516	0.508	ppbV	2		25
3-Chloropropene	ND	ND	ppbV	NC		25
Carbon disulfide	ND	ND	ppbV	NC		25
1,1,2-Trichloro-1,2,2-Trifluoroethane	0.079	0.078	ppbV	1		25

Lab Duplicate Analysis
Batch Quality Control

Project Name: NBHS IRA O&M
Project Number: 115058

Lab Number: L1510617
Report Date: 05/26/15

Parameter	Native Sample	Duplicate Sample	Units	RPD	RPD Limits
MCP Volatile Organics in Air by SIM - Mansfield Lab Associated sample(s): 02 QC Batch ID: WG786392-5 QC Sample: L1509799-01 Client ID: DUP Sample					
Halothane	ND	ND	ppbV	NC	25
trans-1,2-Dichloroethene	ND	ND	ppbV	NC	25
1,1-Dichloroethane	ND	ND	ppbV	NC	25
Methyl tert butyl ether	ND	ND	ppbV	NC	25
Vinyl acetate	ND	ND	ppbV	NC	25
2-Butanone	ND	ND	ppbV	NC	25
cis-1,2-Dichloroethene	ND	ND	ppbV	NC	25
Ethyl Acetate	ND	ND	ppbV	NC	25
Chloroform	0.029	0.028	ppbV	4	25
Tetrahydrofuran	ND	ND	ppbV	NC	25
1,2-Dichloroethane	0.035	0.034	ppbV	3	25
n-Hexane	ND	ND	ppbV	NC	25
1,1,1-Trichloroethane	ND	ND	ppbV	NC	25
Benzene	0.146	0.151	ppbV	3	25
Carbon tetrachloride	0.067	0.074	ppbV	10	25
Cyclohexane	0.325	0.341	ppbV	5	25
1,2-Dichloropropane	ND	ND	ppbV	NC	25
Bromodichloromethane	ND	ND	ppbV	NC	25
1,4-Dioxane	ND	ND	ppbV	NC	25

Lab Duplicate Analysis
Batch Quality Control

Project Name: NBHS IRA O&M
Project Number: 115058

Lab Number: L1510617
Report Date: 05/26/15

Parameter	Native Sample	Duplicate Sample	Units	RPD	RPD Limits
MCP Volatile Organics in Air by SIM - Mansfield Lab Associated sample(s): 02 QC Batch ID: WG786392-5 QC Sample: L1509799-01 Client ID: DUP Sample					
Trichloroethene	ND	ND	ppbV	NC	25
2,2,4-Trimethylpentane	ND	ND	ppbV	NC	25
Heptane	ND	ND	ppbV	NC	25
cis-1,3-Dichloropropene	ND	ND	ppbV	NC	25
4-Methyl-2-pentanone	ND	ND	ppbV	NC	25
trans-1,3-Dichloropropene	ND	ND	ppbV	NC	25
1,1,2-Trichloroethane	ND	ND	ppbV	NC	25
Toluene	0.279	0.265	ppbV	5	25
2-Hexanone	ND	ND	ppbV	NC	25
Dibromochloromethane	ND	ND	ppbV	NC	25
1,2-Dibromoethane	ND	ND	ppbV	NC	25
Tetrachloroethene	ND	ND	ppbV	NC	25
1,1,1,2-Tetrachloroethane	ND	ND	ppbV	NC	25
Chlorobenzene	ND	ND	ppbV	NC	25
Ethylbenzene	0.046	0.043	ppbV	7	25
p/m-Xylene	0.136	0.127	ppbV	7	25
Bromoform	ND	ND	ppbV	NC	25
Styrene	0.052	0.045	ppbV	14	25
1,1,2,2-Tetrachloroethane	ND	ND	ppbV	NC	25

Lab Duplicate Analysis
Batch Quality Control

Project Name: NBHS IRA O&M
Project Number: 115058

Lab Number: L1510617
Report Date: 05/26/15

Parameter	Native Sample	Duplicate Sample	Units	RPD	RPD Limits
MCP Volatile Organics in Air by SIM - Mansfield Lab Associated sample(s): 02 QC Batch ID: WG786392-5 QC Sample: L1509799-01 Client ID: DUP Sample					
o-Xylene	0.057	0.050	ppbV	13	25
Isopropylbenzene	ND	ND	ppbV	NC	25
1,3,5-Trimethylbenzene	ND	ND	ppbV	NC	25
1,2,4-Trimethylbenzene	0.055	0.049	ppbV	12	25
Benzyl chloride	ND	ND	ppbV	NC	25
1,3-Dichlorobenzene	ND	ND	ppbV	NC	25
1,4-Dichlorobenzene	ND	ND	ppbV	NC	25
sec-Butylbenzene	ND	ND	ppbV	NC	25
p-Isopropyltoluene	ND	ND	ppbV	NC	25
1,2-Dichlorobenzene	ND	ND	ppbV	NC	25
n-Butylbenzene	ND	ND	ppbV	NC	25
1,2,4-Trichlorobenzene	ND	ND	ppbV	NC	25
Naphthalene	ND	ND	ppbV	NC	25
1,2,3-Trichlorobenzene	ND	ND	ppbV	NC	25
Hexachlorobutadiene	ND	ND	ppbV	NC	25

Project Name: NBHS IRA O&M

Lab Number: L1510617

Project Number: 115058

Report Date: 05/26/15

Canister and Flow Controller Information

Samplenum	Client ID	Media ID	Media Type	Date Prepared	Bottle Order	Cleaning Batch ID	Can Leak Check	Initial Pressure (in. Hg)	Pressure on Receipt (in. Hg)	Flow Controler Leak Chk	Flow Out mL/min	Flow In mL/min	% RPD
L1510617-01	VAPOR INLET	0509	SV200	05/13/15	203738		-	-	-	Pass	216	217	0
L1510617-01	VAPOR INLET	2043	2.7L Can	05/13/15	203738	L1509990-01	Pass	-29.4	-1.9	-	-	-	-
L1510617-02	VAPOR OUTLET	0652	SV200	05/13/15	203738		-	-	-	Pass	212	221	4
L1510617-02	VAPOR OUTLET	524	2.7L Can	05/13/15	203738	L1509990-01	Pass	-29.3	-2.3	-	-	-	-

Project Name:

Project Number: CANISTER QC BAT

Lab Number: L1509990

Report Date: 05/26/15

Air Canister Certification Results

Lab ID:	L1509990-01	Date Collected:	05/07/15 18:00
Client ID:	CAN 391 SHELF 3	Date Received:	05/08/15
Sample Location:		Field Prep:	Not Specified
Matrix:	Air		
Anaytical Method:	48,TO-15		
Analytical Date:	05/09/15 17:33		
Analyst:	MR		

	ppbV			ug/m3				
Parameter	**Results**	**RL**	**MDL**	**Results**	**RL**	**MDL**	**Qualifier**	**Dilution Factor**
Volatile Organics in Air - Mansfield Lab								
Chlorodifluoromethane	ND	0.200	--	ND	0.707	--		1
Propylene	ND	0.500	--	ND	0.861	--		1
Dichlorodifluoromethane	ND	0.200	--	ND	0.989	--		1
Chloromethane	ND	0.200	--	ND	0.413	--		1
1,2-Dichloro-1,1,2,2-tetrafluoroethane	ND	0.200	--	ND	1.40	--		1
Methanol	ND	5.00	--	ND	6.55	--		1
Vinyl chloride	ND	0.200	--	ND	0.511	--		1
1,3-Butadiene	ND	0.200	--	ND	0.442	--		1
Butane	ND	0.200	--	ND	0.475	--		1
Bromomethane	ND	0.200	--	ND	0.777	--		1
Chloroethane	ND	0.200	--	ND	0.528	--		1
Ethyl Alcohol	ND	2.50	--	ND	4.71	--		1
Dichlorofluoromethane	ND	0.200	--	ND	0.842	--		1
Vinyl bromide	ND	0.200	--	ND	0.874	--		1
Acrolein	ND	0.500	--	ND	1.15	--		1
Acetone	ND	1.00	--	ND	2.38	--		1
Acetonitrile	ND	0.200	--	ND	0.336	--		1
Trichlorofluoromethane	ND	0.200	--	ND	1.12	--		1
iso-Propyl Alcohol	ND	0.500	--	ND	1.23	--		1
Acrylonitrile	ND	0.500	--	ND	1.09	--		1
Pentane	ND	0.200	--	ND	0.590	--		1
Ethyl ether	ND	0.200	--	ND	0.606	--		1
1,1-Dichloroethene	ND	0.200	--	ND	0.793	--		1
tert-Butyl Alcohol	ND	0.500	--	ND	1.52	--		1
Methylene chloride	ND	0.500	--	ND	1.74	--		1

Project Name:

Project Number: CANISTER QC BAT

Lab Number: L1509990

Report Date: 05/26/15

Air Canister Certification Results

Lab ID: L1509990-01
Client ID: CAN 391 SHELF 3
Sample Location:

Date Collected: 05/07/15 18:00
Date Received: 05/08/15
Field Prep: Not Specified

Parameter	ppbV Results	ppbV RL	ppbV MDL	ug/m3 Results	ug/m3 RL	ug/m3 MDL	Qualifier	Dilution Factor
Volatile Organics in Air - Mansfield Lab								
3-Chloropropene	ND	0.200	--	ND	0.626	--		1
Carbon disulfide	ND	0.200	--	ND	0.623	--		1
1,1,2-Trichloro-1,2,2-Trifluoroethane	ND	0.200	--	ND	1.53	--		1
trans-1,2-Dichloroethene	ND	0.200	--	ND	0.793	--		1
1,1-Dichloroethane	ND	0.200	--	ND	0.809	--		1
Methyl tert butyl ether	ND	0.200	--	ND	0.721	--		1
Vinyl acetate	ND	0.200	--	ND	0.704	--		1
2-Butanone	ND	0.500	--	ND	1.47	--		1
cis-1,2-Dichloroethene	ND	0.200	--	ND	0.793	--		1
Ethyl Acetate	ND	0.500	--	ND	1.80	--		1
Chloroform	ND	0.200	--	ND	0.977	--		1
Tetrahydrofuran	ND	0.500	--	ND	1.47	--		1
2,2-Dichloropropane	ND	0.200	--	ND	0.924	--		1
1,2-Dichloroethane	ND	0.200	--	ND	0.809	--		1
n-Hexane	ND	0.200	--	ND	0.705	--		1
Isopropyl Ether	ND	0.200	--	ND	0.836	--		1
Ethyl-Tert-Butyl-Ether	ND	0.200	--	ND	0.836	--		1
1,1,1-Trichloroethane	ND	0.200	--	ND	1.09	--		1
1,1-Dichloropropene	ND	0.200	--	ND	0.908	--		1
Benzene	ND	0.200	--	ND	0.639	--		1
Carbon tetrachloride	ND	0.200	--	ND	1.26	--		1
Cyclohexane	ND	0.200	--	ND	0.688	--		1
Tertiary-Amyl Methyl Ether	ND	0.200	--	ND	0.836	--		1
Dibromomethane	ND	0.200	--	ND	1.42	--		1
1,2-Dichloropropane	ND	0.200	--	ND	0.924	--		1
Bromodichloromethane	ND	0.200	--	ND	1.34	--		1
1,4-Dioxane	ND	0.200	--	ND	0.721	--		1
Trichloroethene	ND	0.200	--	ND	1.07	--		1

Project Name:

Project Number: CANISTER QC BAT

Lab Number: L1509990

Report Date: 05/26/15

Air Canister Certification Results

Lab ID: L1509990-01
Client ID: CAN 391 SHELF 3
Sample Location:

Date Collected: 05/07/15 18:00
Date Received: 05/08/15
Field Prep: Not Specified

Parameter	ppbV Results	ppbV RL	ppbV MDL	ug/m3 Results	ug/m3 RL	ug/m3 MDL	Qualifier	Dilution Factor
Volatile Organics in Air - Mansfield Lab								
2,2,4-Trimethylpentane	ND	0.200	--	ND	0.934	--		1
Methyl Methacrylate	ND	0.500	--	ND	2.05	--		1
Heptane	ND	0.200	--	ND	0.820	--		1
cis-1,3-Dichloropropene	ND	0.200	--	ND	0.908	--		1
4-Methyl-2-pentanone	ND	0.500	--	ND	2.05	--		1
trans-1,3-Dichloropropene	ND	0.200	--	ND	0.908	--		1
1,1,2-Trichloroethane	ND	0.200	--	ND	1.09	--		1
Toluene	ND	0.200	--	ND	0.754	--		1
1,3-Dichloropropane	ND	0.200	--	ND	0.924	--		1
2-Hexanone	ND	0.200	--	ND	0.820	--		1
Dibromochloromethane	ND	0.200	--	ND	1.70	--		1
1,2-Dibromoethane	ND	0.200	--	ND	1.54	--		1
Butyl Acetate	ND	0.500	--	ND	2.38	--		1
Octane	ND	0.200	--	ND	0.934	--		1
Tetrachloroethene	ND	0.200	--	ND	1.36	--		1
1,1,1,2-Tetrachloroethane	ND	0.200	--	ND	1.37	--		1
Chlorobenzene	ND	0.200	--	ND	0.921	--		1
Ethylbenzene	ND	0.200	--	ND	0.869	--		1
p/m-Xylene	ND	0.400	--	ND	1.74	--		1
Bromoform	ND	0.200	--	ND	2.07	--		1
Styrene	ND	0.200	--	ND	0.852	--		1
1,1,2,2-Tetrachloroethane	ND	0.200	--	ND	1.37	--		1
o-Xylene	ND	0.200	--	ND	0.869	--		1
1,2,3-Trichloropropane	ND	0.200	--	ND	1.21	--		1
Nonane (C9)	ND	0.200	--	ND	1.05	--		1
Isopropylbenzene	ND	0.200	--	ND	0.983	--		1
Bromobenzene	ND	0.200	--	ND	0.793	--		1
o-Chlorotoluene	ND	0.200	--	ND	1.04	--		1

Project Name:

Project Number: CANISTER QC BAT

Lab Number: L1509990

Report Date: 05/26/15

Air Canister Certification Results

Lab ID: L1509990-01
Client ID: CAN 391 SHELF 3
Sample Location:

Date Collected: 05/07/15 18:00
Date Received: 05/08/15
Field Prep: Not Specified

Parameter	ppbV Results	ppbV RL	ppbV MDL	ug/m3 Results	ug/m3 RL	ug/m3 MDL	Qualifier	Dilution Factor
Volatile Organics in Air - Mansfield Lab								
n-Propylbenzene	ND	0.200	--	ND	0.983	--		1
p-Chlorotoluene	ND	0.200	--	ND	1.04	--		1
4-Ethyltoluene	ND	0.200	--	ND	0.983	--		1
1,3,5-Trimethylbenzene	ND	0.200	--	ND	0.983	--		1
tert-Butylbenzene	ND	0.200	--	ND	1.10	--		1
1,2,4-Trimethylbenzene	ND	0.200	--	ND	0.983	--		1
Decane (C10)	ND	0.200	--	ND	1.16	--		1
Benzyl chloride	ND	0.200	--	ND	1.04	--		1
1,3-Dichlorobenzene	ND	0.200	--	ND	1.20	--		1
1,4-Dichlorobenzene	ND	0.200	--	ND	1.20	--		1
sec-Butylbenzene	ND	0.200	--	ND	1.10	--		1
p-Isopropyltoluene	ND	0.200	--	ND	1.10	--		1
1,2-Dichlorobenzene	ND	0.200	--	ND	1.20	--		1
n-Butylbenzene	ND	0.200	--	ND	1.10	--		1
1,2-Dibromo-3-chloropropane	ND	0.200	--	ND	1.93	--		1
Undecane	ND	0.200	--	ND	1.28	--		1
Dodecane (C12)	ND	0.200	--	ND	1.39	--		1
1,2,4-Trichlorobenzene	ND	0.200	--	ND	1.48	--		1
Naphthalene	ND	0.200	--	ND	1.05	--		1
1,2,3-Trichlorobenzene	ND	0.200	--	ND	1.48	--		1
Hexachlorobutadiene	ND	0.200	--	ND	2.13	--		1

	Results	Qualifier	Units	RDL	Dilution Factor
Tentatively Identified Compounds					
No Tentatively Identified Compounds					

Project Name:

Project Number: CANISTER QC BAT

Lab Number: L1509990

Report Date: 05/26/15

Air Canister Certification Results

Lab ID: L1509990-01

Client ID: CAN 391 SHELF 3

Sample Location:

Date Collected: 05/07/15 18:00

Date Received: 05/08/15

Field Prep: Not Specified

Parameter	ppbV Results	ppbV RL	ppbV MDL	ug/m3 Results	ug/m3 RL	ug/m3 MDL	Qualifier	Dilution Factor
Volatile Organics in Air - Mansfield Lab								

Internal Standard	% Recovery	Qualifier	Acceptance Criteria
1,4-Difluorobenzene	93		60-140
Bromochloromethane	86		60-140
chlorobenzene-d5	89		60-140

Project Name:

Project Number: CANISTER QC BAT

Lab Number: L1509990

Report Date: 05/26/15

Air Canister Certification Results

Lab ID:	L1509990-01	Date Collected:	05/07/15 18:00
Client ID:	CAN 391 SHELF 3	Date Received:	05/08/15
Sample Location:		Field Prep:	Not Specified
Matrix:	Air		
Anaytical Method:	48,TO-15-SIM		
Analytical Date:	05/09/15 17:33		
Analyst:	MR		

	ppbV			ug/m3				
Parameter	**Results**	**RL**	**MDL**	**Results**	**RL**	**MDL**	**Qualifier**	**Dilution Factor**
Volatile Organics in Air by SIM - Mansfield Lab								
Dichlorodifluoromethane	ND	0.200	--	ND	0.989	--		1
Chloromethane	ND	0.200	--	ND	0.413	--		1
1,2-Dichloro-1,1,2,2-tetrafluoroethane	ND	0.050	--	ND	0.349	--		1
Vinyl chloride	ND	0.020	--	ND	0.051	--		1
1,3-Butadiene	ND	0.020	--	ND	0.044	--		1
Bromomethane	ND	0.020	--	ND	0.078	--		1
Chloroethane	ND	0.020	--	ND	0.053	--		1
Acetone	ND	1.00	--	ND	2.38	--		1
Trichlorofluoromethane	ND	0.050	--	ND	0.281	--		1
Acrylonitrile	ND	0.500	--	ND	1.09	--		1
1,1-Dichloroethene	ND	0.020	--	ND	0.079	--		1
Methylene chloride	ND	0.500	--	ND	1.74	--		1
1,1,2-Trichloro-1,2,2-Trifluoroethane	ND	0.050	--	ND	0.383	--		1
Halothane	ND	0.050	--	ND	0.404	--		1
trans-1,2-Dichloroethene	ND	0.020	--	ND	0.079	--		1
1,1-Dichloroethane	ND	0.020	--	ND	0.081	--		1
Methyl tert butyl ether	ND	0.020	--	ND	0.072	--		1
2-Butanone	ND	0.500	--	ND	1.47	--		1
cis-1,2-Dichloroethene	ND	0.020	--	ND	0.079	--		1
Chloroform	ND	0.020	--	ND	0.098	--		1
1,2-Dichloroethane	ND	0.020	--	ND	0.081	--		1
1,1,1-Trichloroethane	ND	0.020	--	ND	0.109	--		1
Benzene	ND	0.100	--	ND	0.319	--		1
Carbon tetrachloride	ND	0.020	--	ND	0.126	--		1
1,2-Dichloropropane	ND	0.020	--	ND	0.092	--		1

Project Name:

Project Number: CANISTER QC BAT

Lab Number: L1509990

Report Date: 05/26/15

Air Canister Certification Results

Lab ID: L1509990-01
Client ID: CAN 391 SHELF 3
Sample Location:

Date Collected: 05/07/15 18:00
Date Received: 05/08/15
Field Prep: Not Specified

Parameter	ppbV Results	ppbV RL	ppbV MDL	ug/m3 Results	ug/m3 RL	ug/m3 MDL	Qualifier	Dilution Factor
Volatile Organics in Air by SIM - Mansfield Lab								
Bromodichloromethane	ND	0.020	--	ND	0.134	--		1
1,4-Dioxane	ND	0.100	--	ND	0.360	--		1
Trichloroethene	ND	0.020	--	ND	0.107	--		1
cis-1,3-Dichloropropene	ND	0.020	--	ND	0.091	--		1
4-Methyl-2-pentanone	ND	0.500	--	ND	2.05	--		1
trans-1,3-Dichloropropene	ND	0.020	--	ND	0.091	--		1
1,1,2-Trichloroethane	ND	0.020	--	ND	0.109	--		1
Toluene	ND	0.050	--	ND	0.188	--		1
Dibromochloromethane	ND	0.020	--	ND	0.170	--		1
1,2-Dibromoethane	ND	0.020	--	ND	0.154	--		1
Tetrachloroethene	ND	0.020	--	ND	0.136	--		1
1,1,1,2-Tetrachloroethane	ND	0.020	--	ND	0.137	--		1
Chlorobenzene	ND	0.020	--	ND	0.092	--		1
Ethylbenzene	ND	0.020	--	ND	0.087	--		1
p/m-Xylene	ND	0.040	--	ND	0.174	--		1
Bromoform	ND	0.020	--	ND	0.207	--		1
Styrene	ND	0.020	--	ND	0.085	--		1
1,1,2,2-Tetrachloroethane	ND	0.020	--	ND	0.137	--		1
o-Xylene	ND	0.020	--	ND	0.087	--		1
Isopropylbenzene	ND	0.200	--	ND	0.983	--		1
4-Ethyltoluene	ND	0.020	--	ND	0.098	--		1
1,3,5-Trimethylbenzene	ND	0.020	--	ND	0.098	--		1
1,2,4-Trimethylbenzene	ND	0.020	--	ND	0.098	--		1
1,3-Dichlorobenzene	ND	0.020	--	ND	0.120	--		1
1,4-Dichlorobenzene	ND	0.020	--	ND	0.120	--		1
sec-Butylbenzene	ND	0.200	--	ND	1.10	--		1
p-Isopropyltoluene	ND	0.200	--	ND	1.10	--		1
1,2-Dichlorobenzene	ND	0.020	--	ND	0.120	--		1

Project Name:

Project Number: CANISTER QC BAT

Lab Number: L1509990

Report Date: 05/26/15

Air Canister Certification Results

Lab ID: L1509990-01
Client ID: CAN 391 SHELF 3
Sample Location:

Date Collected: 05/07/15 18:00
Date Received: 05/08/15
Field Prep: Not Specified

Parameter	ppbV Results	ppbV RL	ppbV MDL	ug/m3 Results	ug/m3 RL	ug/m3 MDL	Qualifier	Dilution Factor
Volatile Organics in Air by SIM - Mansfield Lab								
n-Butylbenzene	ND	0.200	--	ND	1.10	--		1
1,2,4-Trichlorobenzene	ND	0.050	--	ND	0.371	--		1
Naphthalene	ND	0.050	--	ND	0.262	--		1
1,2,3-Trichlorobenzene	ND	0.050	--	ND	0.371	--		1
Hexachlorobutadiene	ND	0.050	--	ND	0.533	--		1

Internal Standard	% Recovery	Qualifier	Acceptance Criteria
1,4-difluorobenzene	93		60-140
bromochloromethane	89		60-140
chlorobenzene-d5	90		60-140

Project Name: NBHS IRA O&M
Project Number: 115058

Lab Number: L1510617
Report Date: 05/26/15

Sample Receipt and Container Information

Were project specific reporting limits specified? YES

Reagent H2O Preserved Vials Frozen on: NA

Cooler Information

Cooler	Custody Seal
N/A	Absent

Container Information

Container ID	Container Type	Cooler	pH	Temp deg C	Pres	Seal	Analysis(*)
L1510617-01A	Canister - 2.7 Liter	N/A	NA		Y	Absent	MCP-TO15(30)
L1510617-02A	Canister - 2.7 Liter	N/A	NA		Y	Absent	MCP-TO15-SIM(30)

*Values in parentheses indicate holding time in days

Project Name:	NBHS IRA O&M	**Lab Number:**	L1510617
Project Number:	115058	**Report Date:**	05/26/15

GLOSSARY

Acronyms

EDL	- Estimated Detection Limit: This value represents the level to which target analyte concentrations are reported as estimated values, when those target analyte concentrations are quantified below the reporting limit (RL). The EDL includes any adjustments from dilutions, concentrations or moisture content, where applicable. The use of EDLs is specific to the analysis of PAHs using Solid-Phase Microextraction (SPME).
EPA	- Environmental Protection Agency.
LCS	- Laboratory Control Sample: A sample matrix, free from the analytes of interest, spiked with verified known amounts of analytes or a material containing known and verified amounts of analytes.
LCSD	- Laboratory Control Sample Duplicate: Refer to LCS.
LFB	- Laboratory Fortified Blank: A sample matrix, free from the analytes of interest, spiked with verified known amounts of analytes or a material containing known and verified amounts of analytes.
MDL	- Method Detection Limit: This value represents the level to which target analyte concentrations are reported as estimated values, when those target analyte concentrations are quantified below the reporting limit (RL). The MDL includes any adjustments from dilutions, concentrations or moisture content, where applicable.
MS	- Matrix Spike Sample: A sample prepared by adding a known mass of target analyte to a specified amount of matrix sample for which an independent estimate of target analyte concentration is available.
MSD	- Matrix Spike Sample Duplicate: Refer to MS.
NA	- Not Applicable.
NC	- Not Calculated: Term is utilized when one or more of the results utilized in the calculation are non-detect at the parameter's reporting unit.
NI	- Not Ignitable.
NP	- Non-Plastic: Term is utilized for the analysis of Atterberg Limits in soil.
RL	- Reporting Limit: The value at which an instrument can accurately measure an analyte at a specific concentration. The RL includes any adjustments from dilutions, concentrations or moisture content, where applicable.
RPD	- Relative Percent Difference: The results from matrix and/or matrix spike duplicates are primarily designed to assess the precision of analytical results in a given matrix and are expressed as relative percent difference (RPD). Values which are less than five times the reporting limit for any individual parameter are evaluated by utilizing the absolute difference between the values; although the RPD value will be provided in the report.
SRM	- Standard Reference Material: A reference sample of a known or certified value that is of the same or similar matrix as the associated field samples.

Footnotes

1	- The reference for this analyte should be considered modified since this analyte is absent from the target analyte list of the original method.

Terms

Total: With respect to Organic analyses, a 'Total' result is defined as the summation of results for individual isomers or Aroclors. If a 'Total' result is requested, the results of its individual components will also be reported. This is applicable to 'Total' results for methods 8260, 8081 and 8082.

Analytical Method: Both the document from which the method originates and the analytical reference method. (Example: EPA 8260B is shown as 1,8260B.) The codes for the reference method documents are provided in the References section of the Addendum.

Data Qualifiers

A	- Spectra identified as "Aldol Condensation Product".
B	- The analyte was detected above the reporting limit in the associated method blank. Flag only applies to associated field samples that have detectable concentrations of the analyte at less than ten times (10x) the concentration found in the blank. For MCP-related projects, flag only applies to associated field samples that have detectable concentrations of the analyte at less than ten times (10x) the concentration found in the blank. For DOD-related projects, flag only applies to associated field samples that have detectable concentrations of the analyte at less than ten times (10x) the concentration found in the blank AND the analyte was detected above one-half the reporting limit (or above the reporting limit for common lab contaminants) in the associated method blank. For NJ-Air-related projects, flag only applies to associated field samples that have detectable concentrations of the analyte above the reporting limit. For NJ-related projects (excluding Air), flag only applies to associated field samples that have detectable concentrations of the analyte, which was detected above the reporting limit in the associated method blank or above five times the reporting limit for common lab contaminants (Phthalates, Acetone, Methylene Chloride, 2-Butanone).
C	- Co-elution: The target analyte co-elutes with a known lab standard (i.e. surrogate, internal standards, etc.) for co-extracted analyses.
D	- Concentration of analyte was quantified from diluted analysis. Flag only applies to field samples that have detectable concentrations of the analyte.

Report Format: Data Usability Report

Project Name:	NBHS IRA O&M	**Lab Number:**	L1510617
Project Number:	115058	**Report Date:**	05/26/15

Data Qualifiers

E - Concentration of analyte exceeds the range of the calibration curve and/or linear range of the instrument.

G - The concentration may be biased high due to matrix interferences (i.e, co-elution) with non-target compound(s). The result should be considered estimated.

H - The analysis of pH was performed beyond the regulatory-required holding time of 15 minutes from the time of sample collection.

I - The lower value for the two columns has been reported due to obvious interference.

M - Reporting Limit (RL) exceeds the MCP CAM Reporting Limit for this analyte.

NJ - Presumptive evidence of compound. This represents an estimated concentration for Tentatively Identified Compounds (TICs), where the identification is based on a mass spectral library search.

P - The RPD between the results for the two columns exceeds the method-specified criteria.

Q - The quality control sample exceeds the associated acceptance criteria. For DOD-related projects, LCS and/or Continuing Calibration Standard exceedences are also qualified on all associated sample results. Note: This flag is not applicable for matrix spike recoveries when the sample concentration is greater than 4x the spike added or for batch duplicate RPD when the sample concentrations are less than 5x the RL. (Metals only.)

R - Analytical results are from sample re-analysis.

RE - Analytical results are from sample re-extraction.

S - Analytical results are from modified screening analysis.

J - Estimated value. This represents an estimated concentration for Tentatively Identified Compounds (TICs).

ND - Not detected at the reporting limit (RL) for the sample.

Report Format: Data Usability Report

Project Name: NBHS IRA O&M **Lab Number:** L1510617
Project Number: 115058 **Report Date:** 05/26/15

REFERENCES

101 Compendium of Methods for the Determination of Toxic Organic Compounds in Ambient Air (EPA/625/R-96/010b:January 1999) with QC Requirements & Performance Standards for the Analysis of TO-15 under the Massachusetts Contingency Plan, WSC-CAM-IXB, July 2010.

LIMITATION OF LIABILITIES

Alpha Analytical performs services with reasonable care and diligence normal to the analytical testing laboratory industry. In the event of an error, the sole and exclusive responsibility of Alpha Analytical shall be to re-perform the work at it's own expense. In no event shall Alpha Analytical be held liable for any incidental, consequential or special damages, including but not limited to, damages in any way connected with the use of, interpretation of, information or analysis provided by Alpha Analytical.

We strongly urge our clients to comply with EPA protocol regarding sample volume, preservation, cooling, containers, sampling procedures, holding time and splitting of samples in the field.

Certification Information

Last revised December 16, 2014

The following analytes are not included in our NELAP Scope of Accreditation:

Westborough Facility
EPA 524.2: Acetone, 2-Butanone (Methyl ethyl ketone (MEK)), Tert-butyl alcohol, 2-Hexanone, Tetrahydrofuran, 1,3,5-Trichlorobenzene, 4-Methyl-2-pentanone (MIBK), Carbon disulfide, Diethyl ether.
EPA 8260C: 1,2,4,5-Tetramethylbenzene, 4-Ethyltoluene, Iodomethane (methyl iodide), Methyl methacrylate, Azobenzene.
EPA 8270D: 1-Methylnaphthalene, Dimethylnaphthalene,1,4-Diphenylhydrazine.
EPA 625: 4-Chloroaniline, 4-Methylphenol.
SM4500: Soil: Total Phosphorus, TKN, NO2, NO3.
EPA 9071: Total Petroleum Hydrocarbons, Oil & Grease.

Mansfield Facility
EPA 8270D: Biphenyl.
EPA 2540D: TSS
EPA TO-15: Halothane, 2,4,4-Trimethyl-2-pentene, 2,4,4-Trimethyl-1-pentene, Thiophene, 2-Methylthiophene, 3-Methylthiophene, 2-Ethylthiophene, 1,2,3-Trimethylbenzene, Indan, Indene, 1,2,4,5-Tetramethylbenzene, Benzothiophene, 1-Methylnaphthalene.

The following analytes are included in our Massachusetts DEP Scope of Accreditation, Westborough Facility:

Drinking Water
EPA 200.8: Sb,As,Ba,Be,Cd,Cr,Cu,Pb,Ni,Se,Tl; **EPA 200.7**: Ba,Be,Ca,Cd,Cr,Cu,Na; **EPA 245.1:** Mercury;
EPA 300.0: Nitrate-N, Fluoride, Sulfate; **EPA 353.2**: Nitrate-N, Nitrite-N; **SM4500NO3-F**: Nitrate-N, Nitrite-N; **SM4500F-C, SM4500CN-CE, EPA 180.1, SM2130B, SM4500Cl-D, SM2320B, SM2540C, SM4500H-B**
EPA 332: Perchlorate.
Microbiology: **SM9215B; SM9223-P/A, SM9223B-Colilert-QT, Enterolert-QT.**

Non-Potable Water
EPA 200.8: Al,Sb,As,Be,Cd,Cr,Cu,Pb,Mn,Ni,Se,Ag,Tl,Zn;
EPA 200.7: Al,Sb,As,Be,Cd,Ca,Cr,Co,Cu,Fe,Pb,Mg,Mn,Mo,Ni,K,Se,Ag,Na,Sr,Ti,Tl,V,Zn;
EPA 245.1, SM4500H,B, EPA 120.1, SM2510B, SM2540C, SM2340B, SM2320B, SM4500CL-E, SM4500F-BC, SM426C, SM4500NH3-BH, **EPA 350.1**: Ammonia-N, **LACHAT 10-107-06-1-B**: Ammonia-N, **SM4500NO3-F,**
EPA 353.2: Nitrate-N**, SM4500NH3-BC-NES, EPA 351.1, SM4500P-E, SM4500P-B, E, SM5220D, EPA 410.4, SM5210B, SM5310C, SM4500CL-D, EPA 1664, SM14 510AC, EPA 420.1, SM4500-CN-CE, SM2540D.**
EPA 624: Volatile Halocarbons & Aromatics,
EPA 608: Chlordane, Toxaphene, Aldrin, alpha-BHC, beta-BHC, gamma-BHC, delta-BHC, Dieldrin, DDD, DDE, DDT, Endosulfan I, Endosulfan II, Endosulfan sulfate, Endrin, Endrin Aldehyde, Heptachlor, Heptachlor Epoxide, PCBs
EPA 625: SVOC (Acid/Base/Neutral Extractables), **EPA 600/4-81-045**: PCB-Oil.
Microbiology: **SM9223B-Colilert-QT; Enterolert-QT, SM9222D-MF**.

For a complete listing of analytes and methods, please contact your Alpha Project Manager.

AIR ANALYSIS

PAGE 1 OF 1

CHAIN OF CUSTODY

ALPHA ANALYTICAL
320 Forbes Blvd, Mansfield, MA 02048
TEL: 508-822-9300 FAX: 508-822-3288

Date Rec'd in Lab: 5/14/15

ALPHA Job #: L1510617

Client Information

Client: TRC
Address: 650 SUFFOLK ST.
LOWELL, MA
Phone: 978-970-5600
Fax: –
Email: DSULLIVAN@TRCSOLUTIONS.COM
☐ These samples have been previously analyzed by Alpha

Project Information

Project Name: NBHS IRA O&M
Project Location: NEW BEDFORD MA
Project #: 115058
Project Manager: D. SULLIVAN
ALPHA Quote #:

Turn-Around Time

☑ Standard ☐ RUSH (only confirmed if pre-approved!)
Date Due: Time:

Report Information - Data Deliverables

☑ FAX
☑ ADEx
Criteria Checker:
(Default based on Regulatory Criteria Indicated)
Other Formats:
☑ EMAIL (standard pdf report)
☐ Additional Deliverables:
Report to: (if different than Project Manager)

Billing Information

☐ Same as Client info PO #: C115058

Regulatory Requirements/Report Limits

State/Fed	Program	Criteria

Other Project Specific Requirements/Comments:

All Columns Below Must Be Filled Out

ALPHA Lab ID (Lab Use Only)	Sample ID	Collection Date	Start Time	End Time	Initial Vacuum	Final Vacuum	Sample Matrix*	Sampler's Initials	Can Size	I D Can	I D - Flow Controller	TO-14A by TO-15	TO-15	TO-15 SIM	APH	FIXED GASES	TO-13A	TO-4 / TO-10	Sample Comments (i.e. PID)
10617.01	VAPOR INLET	5/14/15	9:34	9:46	-30.6	-1.7	SV	JF	2.7 l	2043	0509		✓						
.02	VAPOR OUTLET	5/14/15	9:33	9:46	-29.95	-2.05	O	JF	2.7 l	0524	0652			✓					
Container Type													G	G					

*SAMPLE MATRIX CODES
AA = Ambient Air (Indoor/Outdoor)
SV = Soil Vapor/Landfill Gas/SVE
Other = Please Specify

Relinquished By:	Date/Time	Received By:	Date/Time:
Jason P. Tiero	5/14/15	[illegible]	5/14/15 1803

Please print clearly, legibly and completely. Samples can not be logged in and turnaround time clock will not start until any ambiguities are resolved. All samples submitted are subject to Alpha's Terms and Conditions. See reverse side.

ANALYTICAL REPORT

Lab Number:	L1510662
Client:	TRC Environmental Consultants Wannalancit Mills 650 Suffolk Street Lowell, MA 01854
ATTN:	David Sullivan
Phone:	(978) 656-3565
Project Name:	NBHS IRA O&M
Project Number:	115058
Report Date:	06/09/15

The original project report/data package is held by Alpha Analytical. This report/data package is paginated and should be reproduced only in its entirety. Alpha Analytical holds no responsibility for results and/or data that are not consistent with the original.

Certifications & Approvals: NY (11627), CT (PH-0141), NH (2206), NJ NELAP (MA015), RI (LAO00299), ME (MA00030), PA (68-02089), VA (460194), LA NELAP (03090), FL (E87814), TX (T104704419), WA (C954), USFWS (Permit #LE2069641), USDA (Permit #P330-11-00109), US Army Corps of Engineers.

320 Forbes Boulevard, Mansfield, MA 02048-1806
508-822-9300 (Fax) 508-822-3288 800-624-9220 - www.alphalab.com

Project Name: NBHS IRA O&M
Project Number: 115058

Lab Number: L1510662
Report Date: 06/09/15

Alpha Sample ID	Client ID	Matrix	Sample Location	Collection Date/Time	Receive Date
L1510662-01	VAPOR INLET	AIR MEDIA	NEW BEDFORD, MA	05/14/15 13:58	05/14/15
L1510662-02	VAPOR OUTLET	AIR MEDIA	NEW BEDFORD, MA	05/14/15 14:00	05/14/15

Project Name: NBHS IRA O&M
Project Number: 115058

Lab Number: L1510662
Report Date: 06/09/15

Case Narrative

The samples were received in accordance with the Chain of Custody and no significant deviations were encountered during the preparation or analysis unless otherwise noted. Sample Receipt, Container Information, and the Chain of Custody are located at the back of the report.

Results contained within this report relate only to the samples submitted under this Alpha Lab Number and meet all of the requirements of NELAC, for all NELAC accredited parameters. The data presented in this report is organized by parameter (i.e. VOC, SVOC, etc.). Sample specific Quality Control data (i.e. Surrogate Spike Recovery) is reported at the end of the target analyte list for each individual sample, followed by the Laboratory Batch Quality Control at the end of each parameter. If a sample was re-analyzed or re-extracted due to a required quality control corrective action and if both sets of data are reported, the Laboratory ID of the re-analysis or re-extraction is designated with an "R" or "RE", respectively. When multiple Batch Quality Control elements are reported (e.g. more than one LCS), the associated samples for each element are noted in the grey shaded header line of each data table. Any Laboratory Batch, Sample Specific % recovery or RPD value that is outside the listed Acceptance Criteria is bolded in the report. All specific QC information is also incorporated in the Data Usability format of our Data Merger tool where it can be reviewed along with any associated usability implications. Soil/sediments, solids and tissues are reported on a dry weight basis unless otherwise noted. Definitions of all data qualifiers and acronyms used in this report are provided in the Glossary located at the back of the report.

In reference to questions H (CAM) or 4 (RCP) when "NO" is checked, the performance criteria for CAM and RCP methods allow for some quality control failures to occur and still be within method compliance. In these instances the specific failure is not narrated but noted in the associated QC table. The information is also incorporated in the Data Usability format of our Data Merger tool where it can be reviewed along with any associated usability implications.

Please see the associated ADEx data file for a comparison of laboratory reporting limits that were achieved with the regulatory Numerical Standards requested on the Chain of Custody.

HOLD POLICY
For samples submitted on hold, Alpha's policy is to hold samples (with the exception of Air canisters) free of charge for 21 calendar days from the date the project is completed. After 21 calendar days, we will dispose of all samples submitted including those put on hold unless you have contacted your Client Service Representative and made arrangements for Alpha to continue to hold the samples. Air canisters will be disposed after 3 business days from the date the project is completed.

Please contact Client Services at 800-624-9220 with any questions.

Project Name:	NBHS IRA O&M	**Lab Number:**	L1510662
Project Number:	115058	**Report Date:**	06/09/15

Case Narrative (continued)

REISSUE

Report Submission

This report replaces the report previously issued on May 28, 2015. This report has been reissued to include the unit conversion spreadsheet.

PCB Aroclors in Air

Sample L1510662-01 has elevated detection limits due to the dilution required by the elevated concentrations of target compounds in the sample.

Sample L1510662-01 has elevated detection limits due to the dilution required by the elevated concentrations of target compounds in the sample.

I, the undersigned, attest under the pains and penalties of perjury that, to the best of my knowledge and belief and based upon my personal inquiry of those responsible for providing the information contained in this analytical report, such information is accurate and complete. This certificate of analysis is not complete unless this page accompanies any and all pages of this report.

Authorized Signature: Christopher J. Anderson

Title: Technical Director/Representative

Date: 06/09/15

AIR

Project Name: NBHS IRA O&M

Project Number: 115058

Lab Number: L1510662

Report Date: 06/09/15

SAMPLE RESULTS

Lab ID:	L1510662-01	Date Collected:	05/14/15 13:58
Client ID:	VAPOR INLET	Date Received:	05/14/15
Sample Location:	NEW BEDFORD, MA	Field Prep:	Not Specified
Matrix:	Air Media	Extraction Method:	EPA 3540C
Analytical Method:	48,TO-10A	Extraction Date:	05/19/15 14:00
Analytical Date:	05/20/15 22:57		
Analyst:	SF		

Parameter	Result	Qualifier	Units	RL	MDL	Dilution Factor	Column
PCB Aroclors in Air - Mansfield Lab							
Aroclor 1016	ND		ng/cart	30.0	--	1	A
Aroclor 1221	ND		ng/cart	100	--	1	A
Aroclor 1232	ND		ng/cart	30.0	--	1	A
Aroclor 1248	ND		ng/cart	20.0	--	1	A
Aroclor 1254	ND		ng/cart	20.0	--	1	A
Aroclor 1260	ND		ng/cart	20.0	--	1	A
Aroclor 1262	ND		ng/cart	20.0	--	1	A
Aroclor 1268	ND		ng/cart	20.0	--	1	A

Surrogate	% Recovery	Qualifier	Acceptance Criteria	Column
Tetrachloro-meta-Xylene	81		60-120	A
Decachlorobiphenyl	87		60-120	A
Tetrachloro-meta-Xylene	82		60-120	B
Decachlorobiphenyl	89		60-120	B

Project Name: NBHS IRA O&M

Project Number: 115058

Lab Number: L1510662

Report Date: 06/09/15

SAMPLE RESULTS

Lab ID:	L1510662-01	D	Date Collected:	05/14/15 13:58
Client ID:	VAPOR INLET		Date Received:	05/14/15
Sample Location:	NEW BEDFORD, MA		Field Prep:	Not Specified
Matrix:	Air Media		Extraction Method:	EPA 3540C
Analytical Method:	48,TO-10A		Extraction Date:	05/19/15 14:00
Analytical Date:	05/20/15 22:27			
Analyst:	SF			

Parameter	Result	Qualifier	Units	RL	MDL	Dilution Factor	Column
PCB Aroclors in Air - Mansfield Lab							
Aroclor 1242	781		ng/cart	200	--	10	A

Surrogate	% Recovery	Qualifier	Acceptance Criteria	Column
Tetrachloro-meta-Xylene	65		60-120	A
Decachlorobiphenyl	77		60-120	A
Tetrachloro-meta-Xylene	63		60-120	B
Decachlorobiphenyl	74		60-120	B

Project Name: NBHS IRA O&M
Project Number: 115058

Lab Number: L1510662
Report Date: 06/09/15

SAMPLE RESULTS

Lab ID: L1510662-02
Client ID: VAPOR OUTLET
Sample Location: NEW BEDFORD, MA
Matrix: Air Media
Analytical Method: 48,TO-10A
Analytical Date: 05/20/15 23:28
Analyst: SF

Date Collected: 05/14/15 14:00
Date Received: 05/14/15
Field Prep: Not Specified
Extraction Method: EPA 3540C
Extraction Date: 05/19/15 14:00

Parameter	Result	Qualifier	Units	RL	MDL	Dilution Factor	Column
PCB Aroclors in Air - Mansfield Lab							
Aroclor 1016	ND		ng/cart	30.0	--	1	A
Aroclor 1221	ND		ng/cart	100	--	1	A
Aroclor 1232	ND		ng/cart	30.0	--	1	A
Aroclor 1242	ND		ng/cart	20.0	--	1	A
Aroclor 1248	ND		ng/cart	20.0	--	1	A
Aroclor 1254	ND		ng/cart	20.0	--	1	A
Aroclor 1260	ND		ng/cart	20.0	--	1	A
Aroclor 1262	ND		ng/cart	20.0	--	1	A
Aroclor 1268	ND		ng/cart	20.0	--	1	A

Surrogate	% Recovery	Qualifier	Acceptance Criteria	Column
Tetrachloro-meta-Xylene	87		60-120	A
Decachlorobiphenyl	91		60-120	A
Tetrachloro-meta-Xylene	89		60-120	B
Decachlorobiphenyl	95		60-120	B

Project Name: NBHS IRA O&M
Project Number: 115058

Lab Number: L1510662
Report Date: 06/09/15

Method Blank Analysis
Batch Quality Control

Analytical Method: 48,TO-10A
Analytical Date: 05/20/15 20:56
Analyst: SF

Extraction Method: EPA 3540C
Extraction Date: 05/19/15 14:00

Parameter	Result	Qualifier	Units	RL	MDL	Column
PCB Aroclors in Air - Mansfield Lab for sample(s): 01-02 Batch: WG786177-1						
Aroclor 1016	ND		ng/cart	30.0	--	A
Aroclor 1221	ND		ng/cart	100	--	A
Aroclor 1232	ND		ng/cart	30.0	--	A
Aroclor 1242	ND		ng/cart	20.0	--	A
Aroclor 1248	ND		ng/cart	20.0	--	A
Aroclor 1254	ND		ng/cart	20.0	--	A
Aroclor 1260	ND		ng/cart	20.0	--	A
Aroclor 1262	ND		ng/cart	20.0	--	A
Aroclor 1268	ND		ng/cart	20.0	--	A

Surrogate	%Recovery	Qualifier	Acceptance Criteria	Column
Tetrachloro-meta-Xylene	79		60-120	A
Decachlorobiphenyl	83		60-120	A
Tetrachloro-meta-Xylene	82		60-120	B
Decachlorobiphenyl	85		60-120	B

Lab Control Sample Analysis
Batch Quality Control

Project Name: NBHS IRA O&M
Project Number: 115058

Lab Number: L1510662
Report Date: 06/09/15

Parameter	LCS %Recovery	Qual	LCSD %Recovery	Qual	%Recovery Limits	RPD	Qual	RPD Limits	Column
PCB Aroclors in Air - Mansfield Lab Associated sample(s): 01-02 Batch: WG786177-2									
Aroclor 1016	77		-		40-140	-		50	A
Aroclor 1260	82		-		40-140	-		50	A

Surrogate	LCS %Recovery	Qual	LCSD %Recovery	Qual	Acceptance Criteria	Column
Tetrachloro-meta-Xylene	83				60-120	A
Decachlorobiphenyl	83				60-120	A
Tetrachloro-meta-Xylene	85				60-120	B
Decachlorobiphenyl	86				60-120	B

Project Name: NBHS IRA O&M
Project Number: 115058

Lab Number: L1510662
Report Date: 06/09/15

Sample Receipt and Container Information

Were project specific reporting limits specified? YES

Reagent H2O Preserved Vials Frozen on: NA

Cooler Information Custody Seal

Cooler	
A	Absent

Container Information

Container ID	Container Type	Cooler	pH	Temp deg C	Pres	Seal	Analysis(*)
L1510662-01A	PUF Air Cartridge (PCB) - Low	A	N/A	6.5	Y	Absent	A2-TO10-AROCLOR(7)
L1510662-02A	PUF Air Cartridge (PCB) - Low	A	N/A	6.5	Y	Absent	A2-TO10-AROCLOR(7)

*Values in parentheses indicate holding time in days

Project Name:	NBHS IRA O&M	**Lab Number:**	L1510662
Project Number:	115058	**Report Date:**	06/09/15

GLOSSARY

Acronyms

EDL	- Estimated Detection Limit: This value represents the level to which target analyte concentrations are reported as estimated values, when those target analyte concentrations are quantified below the reporting limit (RL). The EDL includes any adjustments from dilutions, concentrations or moisture content, where applicable. The use of EDLs is specific to the analysis of PAHs using Solid-Phase Microextraction (SPME).
EPA	- Environmental Protection Agency.
LCS	- Laboratory Control Sample: A sample matrix, free from the analytes of interest, spiked with verified known amounts of analytes or a material containing known and verified amounts of analytes.
LCSD	- Laboratory Control Sample Duplicate: Refer to LCS.
LFB	- Laboratory Fortified Blank: A sample matrix, free from the analytes of interest, spiked with verified known amounts of analytes or a material containing known and verified amounts of analytes.
MDL	- Method Detection Limit: This value represents the level to which target analyte concentrations are reported as estimated values, when those target analyte concentrations are quantified below the reporting limit (RL). The MDL includes any adjustments from dilutions, concentrations or moisture content, where applicable.
MS	- Matrix Spike Sample: A sample prepared by adding a known mass of target analyte to a specified amount of matrix sample for which an independent estimate of target analyte concentration is available.
MSD	- Matrix Spike Sample Duplicate: Refer to MS.
NA	- Not Applicable.
NC	- Not Calculated: Term is utilized when one or more of the results utilized in the calculation are non-detect at the parameter's reporting unit.
NI	- Not Ignitable.
NP	- Non-Plastic: Term is utilized for the analysis of Atterberg Limits in soil.
RL	- Reporting Limit: The value at which an instrument can accurately measure an analyte at a specific concentration. The RL includes any adjustments from dilutions, concentrations or moisture content, where applicable.
RPD	- Relative Percent Difference: The results from matrix and/or matrix spike duplicates are primarily designed to assess the precision of analytical results in a given matrix and are expressed as relative percent difference (RPD). Values which are less than five times the reporting limit for any individual parameter are evaluated by utilizing the absolute difference between the values; although the RPD value will be provided in the report.
SRM	- Standard Reference Material: A reference sample of a known or certified value that is of the same or similar matrix as the associated field samples.

Footnotes

1	- The reference for this analyte should be considered modified since this analyte is absent from the target analyte list of the original method.

Terms

Total: With respect to Organic analyses, a 'Total' result is defined as the summation of results for individual isomers or Aroclors. If a 'Total' result is requested, the results of its individual components will also be reported. This is applicable to 'Total' results for methods 8260, 8081 and 8082.

Analytical Method: Both the document from which the method originates and the analytical reference method. (Example: EPA 8260B is shown as 1,8260B.) The codes for the reference method documents are provided in the References section of the Addendum.

Data Qualifiers

A	- Spectra identified as "Aldol Condensation Product".
B	- The analyte was detected above the reporting limit in the associated method blank. Flag only applies to associated field samples that have detectable concentrations of the analyte at less than ten times (10x) the concentration found in the blank. For MCP-related projects, flag only applies to associated field samples that have detectable concentrations of the analyte at less than ten times (10x) the concentration found in the blank. For DOD-related projects, flag only applies to associated field samples that have detectable concentrations of the analyte at less than ten times (10x) the concentration found in the blank AND the analyte was detected above one-half the reporting limit (or above the reporting limit for common lab contaminants) in the associated method blank. For NJ-Air-related projects, flag only applies to associated field samples that have detectable concentrations of the analyte above the reporting limit. For NJ-related projects (excluding Air), flag only applies to associated field samples that have detectable concentrations of the analyte, which was detected above the reporting limit in the associated method blank or above five times the reporting limit for common lab contaminants (Phthalates, Acetone, Methylene Chloride, 2-Butanone).
C	- Co-elution: The target analyte co-elutes with a known lab standard (i.e. surrogate, internal standards, etc.) for co-extracted analyses.
D	- Concentration of analyte was quantified from diluted analysis. Flag only applies to field samples that have detectable concentrations of the analyte.

Report Format: Data Usability Report

Project Name:	NBHS IRA O&M	**Lab Number:**	L1510662
Project Number:	115058	**Report Date:**	06/09/15

Data Qualifiers

E - Concentration of analyte exceeds the range of the calibration curve and/or linear range of the instrument.

G - The concentration may be biased high due to matrix interferences (i.e, co-elution) with non-target compound(s). The result should be considered estimated.

H - The analysis of pH was performed beyond the regulatory-required holding time of 15 minutes from the time of sample collection.

I - The lower value for the two columns has been reported due to obvious interference.

M - Reporting Limit (RL) exceeds the MCP CAM Reporting Limit for this analyte.

NJ - Presumptive evidence of compound. This represents an estimated concentration for Tentatively Identified Compounds (TICs), where the identification is based on a mass spectral library search.

P - The RPD between the results for the two columns exceeds the method-specified criteria.

Q - The quality control sample exceeds the associated acceptance criteria. For DOD-related projects, LCS and/or Continuing Calibration Standard exceedences are also qualified on all associated sample results. Note: This flag is not applicable for matrix spike recoveries when the sample concentration is greater than 4x the spike added or for batch duplicate RPD when the sample concentrations are less than 5x the RL. (Metals only.)

R - Analytical results are from sample re-analysis.

RE - Analytical results are from sample re-extraction.

S - Analytical results are from modified screening analysis.

J - Estimated value. This represents an estimated concentration for Tentatively Identified Compounds (TICs).

ND - Not detected at the reporting limit (RL) for the sample.

Report Format: Data Usability Report

REFERENCES

48 Compendium of Methods for the Determination of Toxic Organic Compounds in Ambient Air. Second Edition. EPA/625/R-96/010b, January 1999.

LIMITATION OF LIABILITIES

Alpha Analytical performs services with reasonable care and diligence normal to the analytical testing laboratory industry. In the event of an error, the sole and exclusive responsibility of Alpha Analytical shall be to re-perform the work at it's own expense. In no event shall Alpha Analytical be held liable for any incidental, consequential or special damages, including but not limited to, damages in any way connected with the use of, interpretation of, information or analysis provided by Alpha Analytical.

We strongly urge our clients to comply with EPA protocol regarding sample volume, preservation, cooling, containers, sampling procedures, holding time and splitting of samples in the field.

Certification Information

Last revised December 16, 2014

The following analytes are not included in our NELAP Scope of Accreditation:

Westborough Facility
EPA 524.2: Acetone, 2-Butanone (Methyl ethyl ketone (MEK)), Tert-butyl alcohol, 2-Hexanone, Tetrahydrofuran, 1,3,5-Trichlorobenzene, 4-Methyl-2-pentanone (MIBK), Carbon disulfide, Diethyl ether.
EPA 8260C: 1,2,4,5-Tetramethylbenzene, 4-Ethyltoluene, Iodomethane (methyl iodide), Methyl methacrylate, Azobenzene.
EPA 8270D: 1-Methylnaphthalene, Dimethylnaphthalene,1,4-Diphenylhydrazine.
EPA 625: 4-Chloroaniline, 4-Methylphenol.
SM4500: Soil: Total Phosphorus, TKN, NO2, NO3.
EPA 9071: Total Petroleum Hydrocarbons, Oil & Grease.

Mansfield Facility
EPA 8270D: Biphenyl.
EPA 2540D: TSS
EPA TO-15: Halothane, 2,4,4-Trimethyl-2-pentene, 2,4,4-Trimethyl-1-pentene, Thiophene, 2-Methylthiophene, 3-Methylthiophene, 2-Ethylthiophene, 1,2,3-Trimethylbenzene, Indan, Indene, 1,2,4,5-Tetramethylbenzene, Benzothiophene, 1-Methylnaphthalene.

The following analytes are included in our Massachusetts DEP Scope of Accreditation, Westborough Facility:

Drinking Water
EPA 200.8: Sb,As,Ba,Be,Cd,Cr,Cu,Pb,Ni,Se,Tl; **EPA 200.7**: Ba,Be,Ca,Cd,Cr,Cu,Na; **EPA 245.1:** Mercury;
EPA 300.0: Nitrate-N, Fluoride, Sulfate; **EPA 353.2**: Nitrate-N, Nitrite-N; **SM4500NO3-F**: Nitrate-N, Nitrite-N; **SM4500F-C, SM4500CN-CE, EPA 180.1, SM2130B, SM4500Cl-D, SM2320B, SM2540C, SM4500H-B**
EPA 332: Perchlorate.
Microbiology: **SM9215B; SM9223-P/A, SM9223B-Colilert-QT, Enterolert-QT.**

Non-Potable Water
EPA 200.8: Al,Sb,As,Be,Cd,Cr,Cu,Pb,Mn,Ni,Se,Ag,Tl,Zn;
EPA 200.7: Al,Sb,As,Be,Cd,Ca,Cr,Co,Cu,Fe,Pb,Mg,Mn,Mo,Ni,K,Se,Ag,Na,Sr,Ti,Tl,V,Zn;
EPA 245.1, SM4500H,B, EPA 120.1, SM2510B, SM2540C, SM2340B, SM2320B, SM4500CL-E, SM4500F-BC, SM426C, SM4500NH3-BH, **EPA 350.1**: Ammonia-N, **LACHAT 10-107-06-1-B**: Ammonia-N, **SM4500NO3-F,**
EPA 353.2: Nitrate-N**, SM4500NH3-BC-NES, EPA 351.1, SM4500P-E, SM4500P-B, E, SM5220D, EPA 410.4, SM5210B, SM5310C, SM4500CL-D, EPA 1664, SM14 510AC, EPA 420.1, SM4500-CN-CE, SM2540D.**
EPA 624: Volatile Halocarbons & Aromatics,
EPA 608: Chlordane, Toxaphene, Aldrin, alpha-BHC, beta-BHC, gamma-BHC, delta-BHC, Dieldrin, DDD, DDE, DDT, Endosulfan I, Endosulfan II, Endosulfan sulfate, Endrin, Endrin Aldehyde, Heptachlor, Heptachlor Epoxide, PCBs
EPA 625: SVOC (Acid/Base/Neutral Extractables), **EPA 600/4-81-045**: PCB-Oil.
Microbiology: **SM9223B-Colilert-QT; Enterolert-QT, SM9222D-MF**.

For a complete listing of analytes and methods, please contact your Alpha Project Manager.

AIR ANALYSIS

PAGE 1 OF 1

CHAIN OF CUSTODY

ALPHA ANALYTICAL
320 Forbes Blvd, Mansfield, MA 02048
TEL: 508-822-9300 FAX: 508-822-3288

Date Rec'd in Lab: 5/14/15

ALPHA Job #: L1510662

Client Information

Client: TRC
Address: 650 SUFFOLK ST
LOWELL MA
Phone: 978-970-5600
Fax: —
Email: DSULLIVAN@TRCSOLUTIONS.COM

☐ These samples have been previously analyzed by Alpha

Project Information

Project Name: NBHS IRA OAM
Project Location: NEW BEDFORD MA
Project #: 115058
Project Manager: DAVID SULLIVAN
ALPHA Quote #:

Turn-Around Time

☑ Standard ☐ RUSH (only confirmed if pre-approved!)

Date Due: Time:

Report Information - Data Deliverables

☐ FAX
☑ ADEx
Criteria Checker:
(Default based on Regulatory Criteria Indicated)
Other Formats:
☑ EMAIL (standard pdf report)
☐ Additional Deliverables:

Report to: (if different than Project Manager)

Billing Information

☐ Same as Client info PO #: C115058

Regulatory Requirements/Report Limits

State/Fed	Program	Criteria

Other Project Specific Requirements/Comments:

All Columns Below Must Be Filled Out

ALPHA Lab ID (Lab Use Only)	Sample ID	Collection Date	Start Time	End Time	Initial Vacuum	Final Vacuum	Sample Matrix*	Sampler's Initials	Can Size	I D Can	I D - Flow Controller	TO-14A by TO-15	TO-15	TO-15 SIM	APH	FIXED GASES	TO-13A	TO-4 / TO-10 PCBs soxhlet	Sample Comments (i.e. PID)
10662.01	VAPOR INLET	5/14/15	9:55	13:58	243 mm	12.5 l	SV	JF	5 l/min	LP351	103°							✓	LOW VOL.
02	VAPOR OUTLET	5/14/15	9:56	14:00	244 mm	12.2 l	O	JF	5 l/min	N010	98°							✓	LOW VOL.

*SAMPLE MATRIX CODES
AA = Ambient Air (Indoor/Outdoor)
SV = Soil Vapor/Landfill Gas/SVE
Other = Please Specify

Container Type

Relinquished By:	Date/Time	Received By:	Date/Time:
James C. Fair	5/14/15	Ken Bailey	5/14/15 1803

Please print clearly, legibly and completely. Samples can not be logged in and turnaround time clock will not start until any ambiguities are resolved. All samples submitted are subject to Alpha's Terms and Conditions. See reverse side.

Sample Results

Lab ID:	L1510662-01	Sampling Time:	4.05	hrs
		Sampling Rate:	5	L/min
Matrix:	Air Media	Total Flow:	1215	L

PCB Aroclors in Air

	ng/cart				ug/m3				Dilution	
Parameter	**Result**	**Units**	**RL**	**MDL**	**Result**	**Units**	**RL**	**MDL**	**Factor**	**Column**
Aroclor 1016	ND	ng/cart	30	-	ND	ug/m3	0.0247	-	1	A
Aroclor 1221	ND	ng/cart	100	-	ND	ug/m3	0.0823	-	1	A
Aroclor 1232	ND	ng/cart	30	-	ND	ug/m3	0.0247	-	1	A
Aroclor 1242	781	ng/cart	20	-	0.643	ug/m3	0.0165	-	1	A
Aroclor 1248	ND	ng/cart	20	-	ND	ug/m3	0.0165	-	1	B
Aroclor 1254	ND	ng/cart	20	-	ND	ug/m3	0.0165	-	1	A
Aroclor 1260	ND	ng/cart	20	-	ND	ug/m3	0.0165	-	1	A
Aroclor 1262	ND	ng/cart	20	-	ND	ug/m3	0.0165	-	1	A
Aroclor 1268	ND	ng/cart	20	-	ND	ug/m3	0.0165	-	1	A

Sample Results

Lab ID:	L1510662-02	Sampling Time:	4.06666667	hrs
		Sampling Rate:	5	L/min
Matrix:	Air Media	Total Flow:	1220	L

PCB Aroclors in Air

	ng/cart				ug/m3				Dilution	
Parameter	**Result**	**Units**	**RL**	**MDL**	**Result**	**Units**	**RL**	**MDL**	**Factor**	**Column**
Aroclor 1016	ND	ng/cart	30	-	ND	ug/m3	0.0246	-	1	A
Aroclor 1221	ND	ng/cart	100	-	ND	ug/m3	0.0820	-	1	A
Aroclor 1232	ND	ng/cart	30	-	ND	ug/m3	0.0246	-	1	A
Aroclor 1242	ND	ng/cart	20	-	ND	ug/m3	0.0164	-	1	A
Aroclor 1248	ND	ng/cart	20	-	ND	ug/m3	0.0164	-	1	A
Aroclor 1254	ND	ng/cart	20	-	ND	ug/m3	0.0164	-	1	A
Aroclor 1260	ND	ng/cart	20	-	ND	ug/m3	0.0164	-	1	A
Aroclor 1262	ND	ng/cart	20	-	ND	ug/m3	0.0164	-	1	A
Aroclor 1268	ND	ng/cart	20	-	ND	ug/m3	0.0164	-	1	A

ANALYTICAL REPORT

Lab Number:	L1512531
Client:	TRC Environmental Consultants Wannalancit Mills 650 Suffolk Street Lowell, MA 01854
ATTN:	David Sullivan
Phone:	(978) 656-3565
Project Name:	NBHS IRA O&M
Project Number:	115058
Report Date:	06/11/15

The original project report/data package is held by Alpha Analytical. This report/data package is paginated and should be reproduced only in its entirety. Alpha Analytical holds no responsibility for results and/or data that are not consistent with the original.

Certifications & Approvals: NY (11627), CT (PH-0141), NH (2206), NJ NELAP (MA015), RI (LAO00299), ME (MA00030), PA (68-02089), VA (460194), LA NELAP (03090), FL (E87814), TX (T104704419), WA (C954), USFWS (Permit #LE2069641), USDA (Permit #P330-11-00109), US Army Corps of Engineers.

320 Forbes Boulevard, Mansfield, MA 02048-1806
508-822-9300 (Fax) 508-822-3288 800-624-9220 - www.alphalab.com

Project Name: NBHS IRA O&M
Project Number: 115058

Lab Number: L1512531
Report Date: 06/11/15

Alpha Sample ID	Client ID	Matrix	Sample Location	Collection Date/Time	Receive Date
L1512531-01	VAPOR INLET	SOIL_VAPOR	NEW BEDFORD	06/04/15 09:28	06/05/15
L1512531-02	VAPOR OUTLET	AIR	NEW BEDFORD	06/04/15 09:31	06/05/15

Project Name: NBHS IRA O&M **Lab Number:** L1512531

Project Number: 115058 **Report Date:** 06/11/15

MADEP MCP Response Action Analytical Report Certification

This form provides certifications for all samples performed by MCP methods. Please refer to the Sample Results and Container Information sections of this report for specification of MCP methods used for each analysis. The following questions pertain only to MCP Analytical Methods.

An affirmative response to questions A through F is required for "Presumptive Certainty" status		
A	Were all samples received in a condition consistent with those described on the Chain-of-Custody, properly preserved (including temperature) in the field or laboratory, and prepared/analyzed within method holding times?	YES
B	Were the analytical method(s) and all associated QC requirements specified in the selected CAM protocol(s) followed?	YES
C	Were all required corrective actions and analytical response actions specified in the selected CAM protocol(s) implemented for all identified performance standard non-conformances?	YES
D	Does the laboratory report comply with all the reporting requirements specified in CAM VII A, "Quality Assurance and Quality Control Guidelines for the Acquisition and Reporting of Analytical Data?"	YES
E a.	VPH, EPH, and APH Methods only: Was each method conducted without significant modification(s)? (Refer to the individual method(s) for a list of significant modifications).	N/A
E b.	APH and TO-15 Methods only: Was the complete analyte list reported for each method?	YES
F	Were all applicable CAM protocol QC and performance standard non-conformances identified and evaluated in a laboratory narrative (including all "No" responses to Questions A through E)?	YES

A response to questions G, H and I is required for "Presumptive Certainty" status		
G	Were the reporting limits at or below all CAM reporting limits specified in the selected CAM protocol(s)?	NO
H	Were all QC performance standards specified in the CAM protocol(s) achieved?	YES
I	Were results reported for the complete analyte list specified in the selected CAM protocol(s)?	YES

For any questions answered "No", please refer to the case narrative section on the following page(s).

Please note that sample matrix information is located in the Sample Results section of this report.

Project Name: NBHS IRA O&M
Project Number: 115058

Lab Number: L1512531
Report Date: 06/11/15

Case Narrative

The samples were received in accordance with the Chain of Custody and no significant deviations were encountered during the preparation or analysis unless otherwise noted. Sample Receipt, Container Information, and the Chain of Custody are located at the back of the report.

Results contained within this report relate only to the samples submitted under this Alpha Lab Number and meet all of the requirements of NELAC, for all NELAC accredited parameters. The data presented in this report is organized by parameter (i.e. VOC, SVOC, etc.). Sample specific Quality Control data (i.e. Surrogate Spike Recovery) is reported at the end of the target analyte list for each individual sample, followed by the Laboratory Batch Quality Control at the end of each parameter. If a sample was re-analyzed or re-extracted due to a required quality control corrective action and if both sets of data are reported, the Laboratory ID of the re-analysis or re-extraction is designated with an "R" or "RE", respectively. When multiple Batch Quality Control elements are reported (e.g. more than one LCS), the associated samples for each element are noted in the grey shaded header line of each data table. Any Laboratory Batch, Sample Specific % recovery or RPD value that is outside the listed Acceptance Criteria is bolded in the report. All specific QC information is also incorporated in the Data Usability format of our Data Merger tool where it can be reviewed along with any associated usability implications. Soil/sediments, solids and tissues are reported on a dry weight basis unless otherwise noted. Definitions of all data qualifiers and acronyms used in this report are provided in the Glossary located at the back of the report.

In reference to questions H (CAM) or 4 (RCP) when "NO" is checked, the performance criteria for CAM and RCP methods allow for some quality control failures to occur and still be within method compliance. In these instances the specific failure is not narrated but noted in the associated QC table. The information is also incorporated in the Data Usability format of our Data Merger tool where it can be reviewed along with any associated usability implications.

Please see the associated ADEx data file for a comparison of laboratory reporting limits that were achieved with the regulatory Numerical Standards requested on the Chain of Custody.

HOLD POLICY
For samples submitted on hold, Alpha's policy is to hold samples (with the exception of Air canisters) free of charge for 21 calendar days from the date the project is completed. After 21 calendar days, we will dispose of all samples submitted including those put on hold unless you have contacted your Client Service Representative and made arrangements for Alpha to continue to hold the samples. Air canisters will be disposed after 3 business days from the date the project is completed.

Please contact Client Services at 800-624-9220 with any questions.

Project Name:	NBHS IRA O&M	**Lab Number:**	L1512531
Project Number:	115058	**Report Date:**	06/11/15

Case Narrative (continued)

MCP Related Narratives

Canisters were released from the laboratory on June 3, 2015. The canister certification data is provided as an addendum.

MCP Volatile Organics in Air

In reference to question G:

One or more of the target analytes did not achieve the requested CAM reporting limits.

I, the undersigned, attest under the pains and penalties of perjury that, to the best of my knowledge and belief and based upon my personal inquiry of those responsible for providing the information contained in this analytical report, such information is accurate and complete. This certificate of analysis is not complete unless this page accompanies any and all pages of this report.

Authorized Signature: Christopher J. Anderson

Title: Technical Director/Representative Date: 06/11/15

AIR

Project Name: NBHS IRA O&M
Project Number: 115058

Lab Number: L1512531
Report Date: 06/11/15

SAMPLE RESULTS

Lab ID: L1512531-01
Client ID: VAPOR INLET
Sample Location: NEW BEDFORD
Matrix: Soil_Vapor
Anaytical Method: 101,TO-15
Analytical Date: 06/11/15 07:16
Analyst: RY

Date Collected: 06/04/15 09:28
Date Received: 06/05/15
Field Prep: Not Specified

Parameter	ppbV Results	ppbV RL	ppbV MDL	ug/m3 Results	ug/m3 RL	ug/m3 MDL	Qualifier	Dilution Factor
MCP Volatile Organics in Air - Mansfield Lab								
Vinyl chloride	0.474	0.200	--	1.21	0.511	--		1
Bromomethane	ND	0.200	--	ND	0.777	--		1
Acetone	2.92	1.00	--	6.94	2.38	--		1
1,1-Dichloroethene	ND	0.200	--	ND	0.793	--		1
Methylene chloride	ND	0.500	--	ND	1.74	--		1
trans-1,2-Dichloroethene	ND	0.200	--	ND	0.793	--		1
1,1-Dichloroethane	ND	0.200	--	ND	0.809	--		1
Methyl tert butyl ether	ND	0.200	--	ND	0.721	--		1
2-Butanone	ND	0.500	--	ND	1.47	--		1
cis-1,2-Dichloroethene	ND	0.200	--	ND	0.793	--		1
Chloroform	ND	0.200	--	ND	0.977	--		1
1,2-Dichloroethane	ND	0.200	--	ND	0.809	--		1
1,1,1-Trichloroethane	ND	0.200	--	ND	1.09	--		1
Benzene	0.380	0.200	--	1.21	0.639	--		1
Carbon tetrachloride	ND	0.200	--	ND	1.26	--		1
1,2-Dichloropropane	ND	0.200	--	ND	0.924	--		1
Bromodichloromethane	ND	0.200	--	ND	1.34	--		1
1,4-Dioxane	ND	0.200	--	ND	0.721	--		1
Trichloroethene	0.316	0.200	--	1.70	1.07	--		1
cis-1,3-Dichloropropene	ND	0.200	--	ND	0.908	--		1
4-Methyl-2-pentanone	ND	0.500	--	ND	2.05	--		1
trans-1,3-Dichloropropene	ND	0.200	--	ND	0.908	--		1
1,1,2-Trichloroethane	ND	0.200	--	ND	1.09	--		1
Toluene	1.91	0.200	--	7.20	0.754	--		1

Project Name: NBHS IRA O&M
Project Number: 115058
Lab Number: L1512531
Report Date: 06/11/15

SAMPLE RESULTS

Lab ID: L1512531-01
Client ID: VAPOR INLET
Sample Location: NEW BEDFORD
Date Collected: 06/04/15 09:28
Date Received: 06/05/15
Field Prep: Not Specified

Parameter	ppbV Results	ppbV RL	ppbV MDL	ug/m3 Results	ug/m3 RL	ug/m3 MDL	Qualifier	Dilution Factor
MCP Volatile Organics in Air - Mansfield Lab								
Dibromochloromethane	ND	0.200	--	ND	1.70	--		1
1,2-Dibromoethane	ND	0.200	--	ND	1.54	--		1
Tetrachloroethene	ND	0.200	--	ND	1.36	--		1
Chlorobenzene	ND	0.200	--	ND	0.921	--		1
Ethylbenzene	0.205	0.200	--	0.890	0.869	--		1
p/m-Xylene	0.765	0.400	--	3.32	1.74	--		1
Bromoform	ND	0.200	--	ND	2.07	--		1
Styrene	ND	0.200	--	ND	0.852	--		1
1,1,2,2-Tetrachloroethane	ND	0.200	--	ND	1.37	--		1
o-Xylene	0.277	0.200	--	1.20	0.869	--		1
1,3-Dichlorobenzene	ND	0.200	--	ND	1.20	--		1
1,4-Dichlorobenzene	ND	0.200	--	ND	1.20	--		1
1,2-Dichlorobenzene	ND	0.200	--	ND	1.20	--		1
1,2,4-Trichlorobenzene	ND	0.200	--	ND	1.48	--		1
Naphthalene	ND	0.200	--	ND	1.05	--		1
Hexachlorobutadiene	ND	0.200	--	ND	2.13	--		1

Internal Standard	% Recovery	Qualifier	Acceptance Criteria
1,4-Difluorobenzene	88		60-140
Bromochloromethane	95		60-140
chlorobenzene-d5	89		60-140

Project Name: NBHS IRA O&M
Project Number: 115058

Lab Number: L1512531
Report Date: 06/11/15

SAMPLE RESULTS

Lab ID: L1512531-02
Client ID: VAPOR OUTLET
Sample Location: NEW BEDFORD
Matrix: Air
Anaytical Method: 101,TO15-SIM
Analytical Date: 06/09/15 16:11
Analyst: MB

Date Collected: 06/04/15 09:31
Date Received: 06/05/15
Field Prep: Not Specified

Parameter	ppbV Results	ppbV RL	ppbV MDL	ug/m3 Results	ug/m3 RL	ug/m3 MDL	Qualifier	Dilution Factor
MCP Volatile Organics in Air by SIM - Mansfield Lab								
Vinyl chloride	0.075	0.020	--	0.192	0.051	--		1
Bromomethane	ND	0.020	--	ND	0.078	--		1
Acetone	ND	1.00	--	ND	2.38	--		1
1,1-Dichloroethene	ND	0.020	--	ND	0.079	--		1
Methylene chloride	ND	1.40	--	ND	1.74	--		1
trans-1,2-Dichloroethene	1.33	0.020	--	5.27	0.079	--		1
1,1-Dichloroethane	ND	0.020	--	ND	0.081	--		1
Methyl tert butyl ether	ND	0.200	--	ND	0.721	--		1
2-Butanone	ND	0.500	--	ND	1.47	--		1
cis-1,2-Dichloroethene	2.88	0.020	--	11.4	0.079	--		1
Chloroform	0.202	0.020	--	0.986	0.098	--		1
1,2-Dichloroethane	ND	0.020	--	ND	0.081	--		1
1,1,1-Trichloroethane	ND	0.020	--	ND	0.109	--		1
Benzene	0.126	0.100	--	0.403	0.319	--		1
Carbon tetrachloride	ND	0.020	--	ND	0.126	--		1
1,2-Dichloropropane	ND	0.020	--	ND	0.092	--		1
Bromodichloromethane	ND	0.020	--	ND	0.134	--		1
1,4-Dioxane	ND	0.100	--	ND	0.360	--		1
Trichloroethene	ND	0.020	--	ND	0.107	--		1
cis-1,3-Dichloropropene	ND	0.020	--	ND	0.091	--		1
4-Methyl-2-pentanone	ND	0.500	--	ND	2.05	--		1
trans-1,3-Dichloropropene	ND	0.020	--	ND	0.091	--		1
1,1,2-Trichloroethane	ND	0.020	--	ND	0.109	--		1
Toluene	1.75	0.050	--	6.59	0.188	--		1

Project Name: NBHS IRA O&M
Project Number: 115058
Lab Number: L1512531
Report Date: 06/11/15

SAMPLE RESULTS

Lab ID: L1512531-02
Client ID: VAPOR OUTLET
Sample Location: NEW BEDFORD
Date Collected: 06/04/15 09:31
Date Received: 06/05/15
Field Prep: Not Specified

Parameter	ppbV Results	ppbV RL	ppbV MDL	ug/m3 Results	ug/m3 RL	ug/m3 MDL	Qualifier	Dilution Factor
MCP Volatile Organics in Air by SIM - Mansfield Lab								
Dibromochloromethane	ND	0.020	--	ND	0.170	--		1
1,2-Dibromoethane	ND	0.020	--	ND	0.154	--		1
Tetrachloroethene	ND	0.020	--	ND	0.136	--		1
Chlorobenzene	ND	0.020	--	ND	0.092	--		1
Ethylbenzene	0.324	0.020	--	1.41	0.087	--		1
p/m-Xylene	1.15	0.040	--	5.00	0.174	--		1
Bromoform	ND	0.020	--	ND	0.207	--		1
Styrene	ND	0.020	--	ND	0.085	--		1
1,1,2,2-Tetrachloroethane	ND	0.020	--	ND	0.137	--		1
o-Xylene	0.405	0.020	--	1.76	0.087	--		1
1,3-Dichlorobenzene	ND	0.020	--	ND	0.120	--		1
1,4-Dichlorobenzene	ND	0.020	--	ND	0.120	--		1
1,2-Dichlorobenzene	ND	0.020	--	ND	0.120	--		1
1,2,4-Trichlorobenzene	ND	0.050	--	ND	0.371	--		1
Naphthalene	0.076	0.050	--	0.398	0.262	--		1
Hexachlorobutadiene	ND	0.050	--	ND	0.533	--		1

Internal Standard	% Recovery	Qualifier	Acceptance Criteria
1,4-difluorobenzene	87		60-140
bromochloromethane	89		60-140
chlorobenzene-d5	87		60-140

Project Name: NBHS IRA O&M
Project Number: 115058

Lab Number: L1512531
Report Date: 06/11/15

Method Blank Analysis
Batch Quality Control

Analytical Method: 101,TO15-SIM
Analytical Date: 06/09/15 11:26

Parameter	ppbV Results	ppbV RL	ppbV MDL	ug/m3 Results	ug/m3 RL	ug/m3 MDL	Qualifier	Dilution Factor
MCP Volatile Organics in Air by SIM - Mansfield Lab for sample(s): 02 Batch: WG791912-4								
Dichlorodifluoromethane	ND	0.200	--	ND	0.989	--		1
Chloromethane	ND	0.500	--	ND	0.500	--		1
Freon-114	ND	0.050	--	ND	0.349	--		1
Vinyl chloride	ND	0.020	--	ND	0.051	--		1
1,3-Butadiene	ND	0.020	--	ND	0.044	--		1
Bromomethane	ND	0.020	--	ND	0.078	--		1
Chloroethane	ND	0.020	--	ND	0.053	--		1
Acetone	ND	1.00	--	ND	2.38	--		1
Trichlorofluoromethane	ND	0.050	--	ND	0.281	--		1
Acrylonitrile	ND	0.500	--	ND	1.09	--		1
1,1-Dichloroethene	ND	0.020	--	ND	0.079	--		1
Methylene chloride	ND	1.40	--	ND	1.74	--		1
Freon-113	ND	0.050	--	ND	0.383	--		1
Halothane	ND	0.050	--	ND	0.404	--		1
trans-1,2-Dichloroethene	ND	0.020	--	ND	0.079	--		1
1,1-Dichloroethane	ND	0.020	--	ND	0.081	--		1
Methyl tert butyl ether	ND	0.200	--	ND	0.721	--		1
2-Butanone	ND	0.500	--	ND	1.47	--		1
cis-1,2-Dichloroethene	ND	0.020	--	ND	0.079	--		1
Chloroform	ND	0.020	--	ND	0.098	--		1
1,2-Dichloroethane	ND	0.020	--	ND	0.081	--		1
1,1,1-Trichloroethane	ND	0.020	--	ND	0.109	--		1
Benzene	ND	0.100	--	ND	0.319	--		1
Carbon tetrachloride	ND	0.020	--	ND	0.126	--		1
1,2-Dichloropropane	ND	0.020	--	ND	0.092	--		1

Project Name: NBHS IRA O&M
Project Number: 115058

Lab Number: L1512531
Report Date: 06/11/15

Method Blank Analysis
Batch Quality Control

Analytical Method: 101,TO15-SIM
Analytical Date: 06/09/15 11:26

Parameter	ppbV Results	ppbV RL	ppbV MDL	ug/m3 Results	ug/m3 RL	ug/m3 MDL	Qualifier	Dilution Factor
MCP Volatile Organics in Air by SIM - Mansfield Lab for sample(s): 02 Batch: WG791912-4								
Bromodichloromethane	ND	0.020	--	ND	0.134	--		1
1,4-Dioxane	ND	0.100	--	ND	0.360	--		1
Trichloroethene	ND	0.020	--	ND	0.107	--		1
cis-1,3-Dichloropropene	ND	0.020	--	ND	0.091	--		1
4-Methyl-2-pentanone	ND	0.500	--	ND	2.05	--		1
trans-1,3-Dichloropropene	ND	0.020	--	ND	0.091	--		1
1,1,2-Trichloroethane	ND	0.020	--	ND	0.109	--		1
Toluene	ND	0.050	--	ND	0.188	--		1
Dibromochloromethane	ND	0.020	--	ND	0.170	--		1
1,2-Dibromoethane	ND	0.020	--	ND	0.154	--		1
Tetrachloroethene	ND	0.020	--	ND	0.136	--		1
1,1,1,2-Tetrachloroethane	ND	0.020	--	ND	0.137	--		1
Chlorobenzene	ND	0.020	--	ND	0.092	--		1
Ethylbenzene	ND	0.020	--	ND	0.087	--		1
p/m-Xylene	ND	0.040	--	ND	0.174	--		1
Bromoform	ND	0.020	--	ND	0.207	--		1
Styrene	ND	0.020	--	ND	0.085	--		1
1,1,2,2-Tetrachloroethane	ND	0.020	--	ND	0.137	--		1
o-Xylene	ND	0.020	--	ND	0.087	--		1
Isopropylbenzene	ND	0.500	--	ND	0.983	--		1
1,3,5-Trimethybenzene	ND	0.020	--	ND	0.098	--		1
1,2,4-Trimethylbenzene	ND	0.020	--	ND	0.098	--		1
1,3-Dichlorobenzene	ND	0.020	--	ND	0.120	--		1
1,4-Dichlorobenzene	ND	0.020	--	ND	0.120	--		1
sec-Butylbenzene	ND	0.500	--	ND	1.10	--		1

Project Name: NBHS IRA O&M
Project Number: 115058

Lab Number: L1512531
Report Date: 06/11/15

Method Blank Analysis
Batch Quality Control

Analytical Method: 101,TO15-SIM
Analytical Date: 06/09/15 11:26

Parameter	ppbV Results	ppbV RL	ppbV MDL	ug/m3 Results	ug/m3 RL	ug/m3 MDL	Qualifier	Dilution Factor
MCP Volatile Organics in Air by SIM - Mansfield Lab for sample(s): 02 Batch: WG791912-4								
p-Isopropyltoluene	ND	0.500	--	ND	1.10	--		1
1,2-Dichlorobenzene	ND	0.020	--	ND	0.120	--		1
n-Butylbenzene	ND	0.500	--	ND	1.10	--		1
1,2,4-Trichlorobenzene	ND	0.050	--	ND	0.371	--		1
Naphthalene	ND	0.050	--	ND	0.262	--		1
1,2,3-Trichlorobenzene	ND	0.050	--	ND	0.371	--		1
Hexachlorobutadiene	ND	0.050	--	ND	0.533	--		1

Project Name: NBHS IRA O&M
Project Number: 115058

Lab Number: L1512531
Report Date: 06/11/15

Method Blank Analysis
Batch Quality Control

Analytical Method: 101,TO-15
Analytical Date: 06/10/15 13:00

Parameter	ppbV Results	ppbV RL	ppbV MDL	ug/m3 Results	ug/m3 RL	ug/m3 MDL	Qualifier	Dilution Factor
MCP Volatile Organics in Air - Mansfield Lab for sample(s): 01 Batch: WG792374-4								
Chlorodifluoromethane	ND	0.200	--	ND	0.707	--		1
Propylene	ND	0.500	--	ND	0.861	--		1
Dichlorodifluoromethane	ND	0.200	--	ND	0.989	--		1
Chloromethane	ND	0.200	--	ND	0.413	--		1
1,2-Dichloro-1,1,2,2-tetrafluoroethane	ND	0.200	--	ND	1.40	--		1
Methanol	ND	5.00	--	ND	6.55	--		1
Vinyl chloride	ND	0.200	--	ND	0.511	--		1
1,3-Butadiene	ND	0.200	--	ND	0.442	--		1
Butane	ND	0.200	--	ND	0.475	--		1
Bromomethane	ND	0.200	--	ND	0.777	--		1
Chloroethane	ND	0.200	--	ND	0.528	--		1
Ethyl Alcohol	ND	2.50	--	ND	4.71	--		1
Dichlorofluoromethane	ND	0.200	--	ND	0.842	--		1
Vinyl bromide	ND	0.200	--	ND	0.874	--		1
Acrolein	ND	0.500	--	ND	1.15	--		1
Acetone	ND	1.00	--	ND	2.38	--		1
Acetonitrile	ND	0.200	--	ND	0.336	--		1
Trichlorofluoromethane	ND	0.200	--	ND	1.12	--		1
iso-Propyl Alcohol	ND	0.500	--	ND	1.23	--		1
Acrylonitrile	ND	0.500	--	ND	1.09	--		1
Pentane	ND	0.200	--	ND	0.590	--		1
Ethyl ether	ND	0.200	--	ND	0.606	--		1
1,1-Dichloroethene	ND	0.200	--	ND	0.793	--		1
tert-Butyl Alcohol	ND	0.500	--	ND	1.52	--		1
Methylene chloride	ND	0.500	--	ND	1.74	--		1

Project Name: NBHS IRA O&M
Project Number: 115058

Lab Number: L1512531
Report Date: 06/11/15

Method Blank Analysis
Batch Quality Control

Analytical Method: 101,TO-15
Analytical Date: 06/10/15 13:00

Parameter	ppbV Results	ppbV RL	ppbV MDL	ug/m3 Results	ug/m3 RL	ug/m3 MDL	Qualifier	Dilution Factor
MCP Volatile Organics in Air - Mansfield Lab for sample(s): 01 Batch: WG792374-4								
3-Chloropropene	ND	0.200	--	ND	0.626	--		1
Carbon disulfide	ND	0.200	--	ND	0.623	--		1
1,1,2-Trichloro-1,2,2-Trifluoroethane	ND	0.200	--	ND	1.53	--		1
trans-1,2-Dichloroethene	ND	0.200	--	ND	0.793	--		1
1,1-Dichloroethane	ND	0.200	--	ND	0.809	--		1
Methyl tert butyl ether	ND	0.200	--	ND	0.721	--		1
Vinyl acetate	ND	1.00	--	ND	3.52	--		1
2-Butanone	ND	0.500	--	ND	1.47	--		1
cis-1,2-Dichloroethene	ND	0.200	--	ND	0.793	--		1
Ethyl Acetate	ND	0.500	--	ND	1.80	--		1
Chloroform	ND	0.200	--	ND	0.977	--		1
Tetrahydrofuran	ND	0.500	--	ND	1.47	--		1
2,2-Dichloropropane	ND	0.200	--	ND	0.924	--		1
1,2-Dichloroethane	ND	0.200	--	ND	0.809	--		1
n-Hexane	ND	0.200	--	ND	0.705	--		1
Isopropyl Ether	ND	0.200	--	ND	0.836	--		1
Ethyl-Tert-Butyl-Ether	ND	0.200	--	ND	0.836	--		1
1,1,1-Trichloroethane	ND	0.200	--	ND	1.09	--		1
1,1-Dichloropropene	ND	0.200	--	ND	0.908	--		1
Benzene	ND	0.200	--	ND	0.639	--		1
Carbon tetrachloride	ND	0.200	--	ND	1.26	--		1
Cyclohexane	ND	0.200	--	ND	0.688	--		1
Tertiary-Amyl Methyl Ether	ND	0.200	--	ND	0.836	--		1
Dibromomethane	ND	0.200	--	ND	1.42	--		1
1,2-Dichloropropane	ND	0.200	--	ND	0.924	--		1

Project Name: NBHS IRA O&M
Project Number: 115058

Lab Number: L1512531
Report Date: 06/11/15

Method Blank Analysis
Batch Quality Control

Analytical Method: 101,TO-15
Analytical Date: 06/10/15 13:00

Parameter	ppbV Results	ppbV RL	ppbV MDL	ug/m3 Results	ug/m3 RL	ug/m3 MDL	Qualifier	Dilution Factor
MCP Volatile Organics in Air - Mansfield Lab for sample(s): 01 Batch: WG792374-4								
Bromodichloromethane	ND	0.200	--	ND	1.34	--		1
1,4-Dioxane	ND	0.200	--	ND	0.721	--		1
Trichloroethene	ND	0.200	--	ND	1.07	--		1
2,2,4-Trimethylpentane	ND	0.200	--	ND	0.934	--		1
Methyl Methacrylate	ND	0.500	--	ND	2.05	--		1
Heptane	ND	0.200	--	ND	0.820	--		1
cis-1,3-Dichloropropene	ND	0.200	--	ND	0.908	--		1
4-Methyl-2-pentanone	ND	0.500	--	ND	2.05	--		1
trans-1,3-Dichloropropene	ND	0.200	--	ND	0.908	--		1
1,1,2-Trichloroethane	ND	0.200	--	ND	1.09	--		1
Toluene	ND	0.200	--	ND	0.754	--		1
1,3-Dichloropropane	ND	0.200	--	ND	0.924	--		1
2-Hexanone	ND	0.200	--	ND	0.820	--		1
Dibromochloromethane	ND	0.200	--	ND	1.70	--		1
1,2-Dibromoethane	ND	0.200	--	ND	1.54	--		1
Butyl Acetate	ND	0.500	--	ND	2.38	--		1
Octane	ND	0.200	--	ND	0.934	--		1
Tetrachloroethene	ND	0.200	--	ND	1.36	--		1
1,1,1,2-Tetrachloroethane	ND	0.200	--	ND	1.37	--		1
Chlorobenzene	ND	0.200	--	ND	0.921	--		1
Ethylbenzene	ND	0.200	--	ND	0.869	--		1
p/m-Xylene	ND	0.400	--	ND	1.74	--		1
Bromoform	ND	0.200	--	ND	2.07	--		1
Styrene	ND	0.200	--	ND	0.852	--		1
1,1,2,2-Tetrachloroethane	ND	0.200	--	ND	1.37	--		1

Project Name: NBHS IRA O&M
Project Number: 115058
Lab Number: L1512531
Report Date: 06/11/15

Method Blank Analysis
Batch Quality Control

Analytical Method: 101,TO-15
Analytical Date: 06/10/15 13:00

Parameter	ppbV Results	ppbV RL	ppbV MDL	ug/m3 Results	ug/m3 RL	ug/m3 MDL	Qualifier	Dilution Factor
MCP Volatile Organics in Air - Mansfield Lab for sample(s): 01 Batch: WG792374-4								
o-Xylene	ND	0.200	--	ND	0.869	--		1
1,2,3-Trichloropropane	ND	0.200	--	ND	1.21	--		1
Nonane (C9)	ND	0.200	--	ND	1.05	--		1
Isopropylbenzene	ND	0.200	--	ND	0.983	--		1
Bromobenzene	ND	0.200	--	ND	0.793	--		1
o-Chlorotoluene	ND	0.200	--	ND	1.04	--		1
n-Propylbenzene	ND	0.200	--	ND	0.983	--		1
p-Chlorotoluene	ND	0.200	--	ND	1.04	--		1
4-Ethyltoluene	ND	0.200	--	ND	0.983	--		1
1,3,5-Trimethylbenzene	ND	0.200	--	ND	0.983	--		1
tert-Butylbenzene	ND	0.200	--	ND	1.10	--		1
1,2,4-Trimethylbenzene	ND	0.200	--	ND	0.983	--		1
Decane (C10)	ND	0.200	--	ND	1.16	--		1
Benzyl chloride	ND	0.200	--	ND	1.04	--		1
1,3-Dichlorobenzene	ND	0.200	--	ND	1.20	--		1
1,4-Dichlorobenzene	ND	0.200	--	ND	1.20	--		1
sec-Butylbenzene	ND	0.200	--	ND	1.10	--		1
p-Isopropyltoluene	ND	0.200	--	ND	1.10	--		1
1,2-Dichlorobenzene	ND	0.200	--	ND	1.20	--		1
n-Butylbenzene	ND	0.200	--	ND	1.10	--		1
1,2-Dibromo-3-chloropropane	ND	0.200	--	ND	1.93	--		1
Undecane	ND	0.200	--	ND	1.28	--		1
Dodecane (C12)	ND	0.200	--	ND	1.39	--		1
1,2,4-Trichlorobenzene	ND	0.200	--	ND	1.48	--		1
Naphthalene	ND	0.200	--	ND	1.05	--		1

Project Name: NBHS IRA O&M
Project Number: 115058

Lab Number: L1512531
Report Date: 06/11/15

Method Blank Analysis
Batch Quality Control

Analytical Method: 101,TO-15
Analytical Date: 06/10/15 13:00

Parameter	ppbV Results	ppbV RL	ppbV MDL	ug/m3 Results	ug/m3 RL	ug/m3 MDL	Qualifier	Dilution Factor
MCP Volatile Organics in Air - Mansfield Lab for sample(s): 01 Batch: WG792374-4								
1,2,3-Trichlorobenzene	ND	0.200	--	ND	1.48	--		1
Hexachlorobutadiene	ND	0.200	--	ND	2.13	--		1

	Results	Qualifier	Units	RDL	Dilution Factor
Tentatively Identified Compounds					
No Tentatively Identified Compounds					

Lab Control Sample Analysis
Batch Quality Control

Project Name: NBHS IRA O&M
Project Number: 115058

Lab Number: L1512531
Report Date: 06/11/15

Parameter	LCS %Recovery	Qual	LCSD %Recovery	Qual	%Recovery Limits	RPD	Qual	RPD Limits
MCP Volatile Organics in Air by SIM - Mansfield Lab Associated sample(s): 02 Batch: WG791912-3								
Dichlorodifluoromethane	71		-		70-130	-		
Chloromethane	95		-		70-130	-		
1,2-Dichloro-1,1,2,2-tetrafluoroethane	107		-		70-130	-		
Vinyl chloride	105		-		70-130	-		
1,3-Butadiene	108		-		70-130	-		
Bromomethane	108		-		70-130	-		
Chloroethane	102		-		70-130	-		
Acetone	100		-		50-150	-		
Trichlorofluoromethane	109		-		70-130	-		
1,1-Dichloroethene	101		-		70-130	-		
Methylene chloride	97		-		70-130	-		
1,1,2-Trichloro-1,2,2-Trifluoroethane	107		-		70-130	-		
Halothane	94		-		70-130	-		
trans-1,2-Dichloroethene	93		-		70-130	-		
1,1-Dichloroethane	102		-		70-130	-		
Methyl tert butyl ether	103		-		70-130	-		
2-Butanone	93		-		70-130	-		
cis-1,2-Dichloroethene	112		-		70-130	-		
Chloroform	106		-		70-130	-		
1,2-Dichloroethane	101		-		70-130	-		
1,1,1-Trichloroethane	95		-		70-130	-		

Lab Control Sample Analysis
Batch Quality Control

Project Name: NBHS IRA O&M
Project Number: 115058

Lab Number: L1512531
Report Date: 06/11/15

Parameter	LCS %Recovery	Qual	LCSD %Recovery	Qual	%Recovery Limits	RPD	Qual	RPD Limits
MCP Volatile Organics in Air by SIM - Mansfield Lab Associated sample(s): 02 Batch: WG791912-3								
Benzene	89		-		70-130	-		
Carbon tetrachloride	96		-		70-130	-		
1,2-Dichloropropane	93		-		70-130	-		
Bromodichloromethane	92		-		70-130	-		
1,4-Dioxane	94		-		50-150	-		
Trichloroethene	98		-		70-130	-		
cis-1,3-Dichloropropene	103		-		70-130	-		
4-Methyl-2-pentanone	87		-		70-130	-		
trans-1,3-Dichloropropene	89		-		70-130	-		
1,1,2-Trichloroethane	102		-		70-130	-		
Toluene	102		-		70-130	-		
Dibromochloromethane	105		-		70-130	-		
1,2-Dibromoethane	109		-		70-130	-		
Tetrachloroethene	111		-		70-130	-		
Chlorobenzene	111		-		70-130	-		
Ethylbenzene	106		-		70-130	-		
p/m-Xylene	106		-		70-130	-		
Bromoform	108		-		70-130	-		
Styrene	109		-		70-130	-		
1,1,2,2-Tetrachloroethane	108		-		70-130	-		
o-Xylene	107		-		70-130	-		

Lab Control Sample Analysis
Batch Quality Control

Project Name: NBHS IRA O&M
Project Number: 115058

Lab Number: L1512531
Report Date: 06/11/15

Parameter	LCS %Recovery	Qual	LCSD %Recovery	Qual	%Recovery Limits	RPD	Qual	RPD Limits
MCP Volatile Organics in Air by SIM - Mansfield Lab Associated sample(s): 02 Batch: WG791912-3								
1,3,5-Trimethylbenzene	110		-		70-130	-		
1,2,4-Trimethylbenzene	113		-		70-130	-		
1,3-Dichlorobenzene	126		-		70-130	-		
1,4-Dichlorobenzene	120		-		70-130	-		
1,2-Dichlorobenzene	122		-		70-130	-		
1,2,4-Trichlorobenzene	141		-		50-150	-		
Naphthalene	133		-		50-150	-		
1,2,3-Trichlorobenzene	**136**	Q	-		70-130	-		
Hexachlorobutadiene	130		-		50-150	-		

Lab Control Sample Analysis
Batch Quality Control

Project Name: NBHS IRA O&M
Project Number: 115058

Lab Number: L1512531
Report Date: 06/11/15

Parameter	LCS %Recovery	Qual	LCSD %Recovery	Qual	%Recovery Limits	RPD	Qual	RPD Limits
MCP Volatile Organics in Air - Mansfield Lab Associated sample(s): 01 Batch: WG792374-3								
Chlorodifluoromethane	97		-		70-130	-		
Propylene	108		-		70-130	-		
Dichlorodifluoromethane	85		-		70-130	-		
Chloromethane	102		-		70-130	-		
1,2-Dichloro-1,1,2,2-tetrafluoroethane	116		-		70-130	-		
Methanol	90		-		70-130	-		
Vinyl chloride	106		-		70-130	-		
1,3-Butadiene	110		-		70-130	-		
Bromomethane	116		-		70-130	-		
Chloroethane	105		-		70-130	-		
Ethyl Alcohol	99		-		70-130	-		
Dichlorofluoromethane	102		-		70-130	-		
Vinyl bromide	117		-		70-130	-		
Acrolein	100		-		70-130	-		
Acetone	109		-		50-150	-		
Acetonitrile	96		-		70-130	-		
Trichlorofluoromethane	121		-		70-130	-		
iso-Propyl Alcohol	109		-		70-130	-		
Acrylonitrile	96		-		70-130	-		
Pentane	98		-		70-130	-		
Ethyl ether	88		-		70-130	-		

Lab Control Sample Analysis
Batch Quality Control

Project Name: NBHS IRA O&M
Project Number: 115058

Lab Number: L1512531
Report Date: 06/11/15

Parameter	LCS %Recovery	Qual	LCSD %Recovery	Qual	%Recovery Limits	RPD	Qual	RPD Limits
MCP Volatile Organics in Air - Mansfield Lab Associated sample(s): 01 Batch: WG792374-3								
1,1-Dichloroethene	112		-		70-130	-		
tert-Butyl Alcohol	104		-		70-130	-		
Methylene chloride	103		-		70-130	-		
3-Chloropropene	110		-		70-130	-		
Carbon disulfide	109		-		70-130	-		
1,1,2-Trichloro-1,2,2-Trifluoroethane	118		-		70-130	-		
trans-1,2-Dichloroethene	100		-		70-130	-		
1,1-Dichloroethane	109		-		70-130	-		
Methyl tert butyl ether	110		-		70-130	-		
Vinyl acetate	**216**	Q	-		70-130	-		
2-Butanone	100		-		70-130	-		
cis-1,2-Dichloroethene	122		-		70-130	-		
Ethyl Acetate	106		-		70-130	-		
Chloroform	114		-		70-130	-		
Tetrahydrofuran	96		-		70-130	-		
2,2-Dichloropropane	106		-		70-130	-		
1,2-Dichloroethane	113		-		70-130	-		
n-Hexane	87		-		70-130	-		
Isopropyl Ether	86		-		70-130	-		
Ethyl-Tert-Butyl-Ether	89		-		70-130	-		
1,1,1-Trichloroethane	101		-		70-130	-		

Lab Control Sample Analysis
Batch Quality Control

Project Name: NBHS IRA O&M
Project Number: 115058

Lab Number: L1512531
Report Date: 06/11/15

Parameter	LCS %Recovery	Qual	LCSD %Recovery	Qual	%Recovery Limits	RPD	Qual	RPD Limits
MCP Volatile Organics in Air - Mansfield Lab Associated sample(s): 01 Batch: WG792374-3								
1,1-Dichloropropene	93		-		70-130	-		
Benzene	95		-		70-130	-		
Carbon tetrachloride	104		-		70-130	-		
Cyclohexane	88		-		70-130	-		
Tertiary-Amyl Methyl Ether	88		-		70-130	-		
Dibromomethane	93		-		70-130	-		
1,2-Dichloropropane	97		-		70-130	-		
Bromodichloromethane	99		-		70-130	-		
1,4-Dioxane	94		-		50-150	-		
Trichloroethene	106		-		70-130	-		
2,2,4-Trimethylpentane	93		-		70-130	-		
Methyl Methacrylate[1]	88		-		70-130	-		
Heptane	85		-		70-130	-		
cis-1,3-Dichloropropene	104		-		70-130	-		
4-Methyl-2-pentanone	89		-		70-130	-		
trans-1,3-Dichloropropene	90		-		70-130	-		
1,1,2-Trichloroethane	102		-		70-130	-		
Toluene	106		-		70-130	-		
1,3-Dichloropropane	99		-		70-130	-		
2-Hexanone	103		-		70-130	-		
Dibromochloromethane	112		-		70-130	-		

Lab Control Sample Analysis
Batch Quality Control

Project Name: NBHS IRA O&M
Project Number: 115058

Lab Number: L1512531
Report Date: 06/11/15

Parameter	LCS %Recovery	Qual	LCSD %Recovery	Qual	%Recovery Limits	RPD	Qual	RPD Limits
MCP Volatile Organics in Air - Mansfield Lab Associated sample(s): 01 Batch: WG792374-3								
1,2-Dibromoethane	115		-		70-130	-		
Octane	98		-		70-130	-		
Tetrachloroethene	117		-		70-130	-		
1,1,1,2-Tetrachloroethane	107		-		70-130	-		
Chlorobenzene	115		-		70-130	-		
Ethylbenzene	109		-		70-130	-		
p/m-Xylene	110		-		70-130	-		
Bromoform	114		-		70-130	-		
Styrene	113		-		70-130	-		
1,1,2,2-Tetrachloroethane	112		-		70-130	-		
o-Xylene	111		-		70-130	-		
1,2,3-Trichloropropane	103		-		70-130	-		
Nonane (C9)	92		-		70-130	-		
Isopropylbenzene	109		-		70-130	-		
Bromobenzene	102		-		70-130	-		
o-Chlorotoluene	109		-		70-130	-		
n-Propylbenzene	111		-		70-130	-		
p-Chlorotoluene	104		-		70-130	-		
4-Ethyltoluene	108		-		70-130	-		
1,3,5-Trimethylbenzene	112		-		70-130	-		
tert-Butylbenzene	111		-		70-130	-		

Lab Control Sample Analysis
Batch Quality Control

Project Name: NBHS IRA O&M
Project Number: 115058

Lab Number: L1512531
Report Date: 06/11/15

Parameter	LCS %Recovery	Qual	LCSD %Recovery	Qual	%Recovery Limits	RPD	Qual	RPD Limits
MCP Volatile Organics in Air - Mansfield Lab Associated sample(s): 01 Batch: WG792374-3								
1,2,4-Trimethylbenzene	117		-		70-130	-		
Decane (C10)	101		-		70-130	-		
Benzyl chloride	115		-		70-130	-		
1,3-Dichlorobenzene	124		-		70-130	-		
1,4-Dichlorobenzene	122		-		70-130	-		
sec-Butylbenzene	108		-		70-130	-		
p-Isopropyltoluene	105		-		70-130	-		
1,2-Dichlorobenzene	123		-		70-130	-		
n-Butylbenzene	113		-		70-130	-		
1,2-Dibromo-3-chloropropane	106		-		70-130	-		
Undecane	107		-		70-130	-		
Dodecane (C12)	117		-		70-130	-		
1,2,4-Trichlorobenzene	134		-		50-150	-		
Naphthalene	124		-		50-150	-		
1,2,3-Trichlorobenzene	128		-		70-130	-		
Hexachlorobutadiene	126		-		50-150	-		

Lab Duplicate Analysis
Batch Quality Control

Project Name: NBHS IRA O&M
Project Number: 115058

Lab Number: L1512531
Report Date: 06/11/15

Parameter	Native Sample	Duplicate Sample	Units	RPD	Qual	RPD Limits
MCP Volatile Organics in Air by SIM - Mansfield Lab Associated sample(s): 02 QC Batch ID: WG791912-5 QC Sample: L1512522-06 Client ID: DUP Sample						
Vinyl chloride	ND	ND	ppbV	NC		25
Bromomethane	ND	ND	ppbV	NC		25
Acetone	2.21	2.24	ppbV	1		25
1,1-Dichloroethene	2.14	2.15	ppbV	0		25
Methylene chloride	0.500	0.501	ppbV	0		25
trans-1,2-Dichloroethene	0.123	0.125	ppbV	2		25
1,1-Dichloroethane	1.32	1.33	ppbV	1		25
Methyl tert butyl ether	ND	ND	ppbV	NC		25
2-Butanone	ND	ND	ppbV	NC		25
cis-1,2-Dichloroethene	1.62	1.65	ppbV	2		25
Chloroform	0.067	0.068	ppbV	1		25
1,2-Dichloroethane	0.032	0.032	ppbV	0		25
1,1,1-Trichloroethane	3.13	3.17	ppbV	1		25
Benzene	0.169	0.170	ppbV	1		25
Carbon tetrachloride	0.072	0.073	ppbV	1		25
1,2-Dichloropropane	ND	ND	ppbV	NC		25
Bromodichloromethane	ND	ND	ppbV	NC		25
1,4-Dioxane	ND	ND	ppbV	NC		25
Trichloroethene	2.77	2.78	ppbV	0		25

Lab Duplicate Analysis
Batch Quality Control

Project Name: NBHS IRA O&M
Project Number: 115058

Lab Number: L1512531
Report Date: 06/11/15

Parameter	Native Sample	Duplicate Sample	Units	RPD	RPD Limits
MCP Volatile Organics in Air by SIM - Mansfield Lab Associated sample(s): 02 QC Batch ID: WG791912-5 QC Sample: L1512522-06 Client ID: DUP Sample					
cis-1,3-Dichloropropene	ND	ND	ppbV	NC	25
4-Methyl-2-pentanone	ND	ND	ppbV	NC	25
trans-1,3-Dichloropropene	ND	ND	ppbV	NC	25
1,1,2-Trichloroethane	ND	ND	ppbV	NC	25
Toluene	0.137	0.139	ppbV	1	25
Dibromochloromethane	ND	ND	ppbV	NC	25
1,2-Dibromoethane	ND	ND	ppbV	NC	25
Tetrachloroethene	36.7	37.4	ppbV	2	25
Chlorobenzene	ND	ND	ppbV	NC	25
Ethylbenzene	0.024	0.024	ppbV	0	25
p/m-Xylene	0.075	0.076	ppbV	1	25
Bromoform	ND	ND	ppbV	NC	25
Styrene	ND	ND	ppbV	NC	25
1,1,2,2-Tetrachloroethane	ND	ND	ppbV	NC	25
o-Xylene	0.028	0.028	ppbV	0	25
1,3-Dichlorobenzene	ND	ND	ppbV	NC	25
1,4-Dichlorobenzene	ND	ND	ppbV	NC	25
1,2-Dichlorobenzene	ND	ND	ppbV	NC	25
1,2,4-Trichlorobenzene	ND	ND	ppbV	NC	25

Lab Duplicate Analysis
Batch Quality Control

Project Name: NBHS IRA O&M
Project Number: 115058

Lab Number: L1512531
Report Date: 06/11/15

Parameter	Native Sample	Duplicate Sample	Units	RPD	RPD Limits
MCP Volatile Organics in Air by SIM - Mansfield Lab Associated sample(s): 02 QC Batch ID: WG791912-5 QC Sample: L1512522-06 Client ID: DUP Sample					
Naphthalene	ND	ND	ppbV	NC	25
Hexachlorobutadiene	ND	ND	ppbV	NC	25

Lab Duplicate Analysis
Batch Quality Control

Project Name: NBHS IRA O&M
Project Number: 115058

Lab Number: L1512531
Report Date: 06/11/15

Parameter	Native Sample	Duplicate Sample	Units	RPD	RPD Limits
MCP Volatile Organics in Air - Mansfield Lab Associated sample(s): 01 QC Batch ID: WG792374-5 QC Sample: L1512840-01 Client ID: DUP Sample					
Vinyl chloride	ND	ND	ppbV	NC	25
Bromomethane	ND	ND	ppbV	NC	25
Acetone	49.4	50.4	ppbV	2	25
1,1-Dichloroethene	ND	ND	ppbV	NC	25
Methylene chloride	ND	ND	ppbV	NC	25
trans-1,2-Dichloroethene	ND	ND	ppbV	NC	25
1,1-Dichloroethane	ND	ND	ppbV	NC	25
Methyl tert butyl ether	ND	ND	ppbV	NC	25
2-Butanone	4.29	4.33	ppbV	1	25
cis-1,2-Dichloroethene	ND	ND	ppbV	NC	25
Chloroform	ND	ND	ppbV	NC	25
1,2-Dichloroethane	ND	ND	ppbV	NC	25
1,1,1-Trichloroethane	ND	ND	ppbV	NC	25
Benzene	ND	ND	ppbV	NC	25
Carbon tetrachloride	ND	ND	ppbV	NC	25
1,2-Dichloropropane	ND	ND	ppbV	NC	25
Bromodichloromethane	ND	ND	ppbV	NC	25
1,4-Dioxane	ND	ND	ppbV	NC	25
Trichloroethene	ND	ND	ppbV	NC	25

Lab Duplicate Analysis
Batch Quality Control

Project Name: NBHS IRA O&M
Project Number: 115058

Lab Number: L1512531
Report Date: 06/11/15

Parameter	Native Sample	Duplicate Sample	Units	RPD	RPD Limits
MCP Volatile Organics in Air - Mansfield Lab Associated sample(s): 01 QC Batch ID: WG792374-5 QC Sample: L1512840-01 Client ID: DUP Sample					
cis-1,3-Dichloropropene	ND	ND	ppbV	NC	25
4-Methyl-2-pentanone	ND	ND	ppbV	NC	25
trans-1,3-Dichloropropene	ND	ND	ppbV	NC	25
1,1,2-Trichloroethane	ND	ND	ppbV	NC	25
Toluene	0.301	0.330	ppbV	9	25
Dibromochloromethane	ND	ND	ppbV	NC	25
1,2-Dibromoethane	ND	ND	ppbV	NC	25
Tetrachloroethene	ND	ND	ppbV	NC	25
Chlorobenzene	ND	ND	ppbV	NC	25
Ethylbenzene	ND	ND	ppbV	NC	25
p/m-Xylene	ND	ND	ppbV	NC	25
Bromoform	ND	ND	ppbV	NC	25
Styrene	ND	ND	ppbV	NC	25
1,1,2,2-Tetrachloroethane	ND	ND	ppbV	NC	25
o-Xylene	ND	ND	ppbV	NC	25
1,3-Dichlorobenzene	ND	ND	ppbV	NC	25
1,4-Dichlorobenzene	ND	ND	ppbV	NC	25
1,2-Dichlorobenzene	ND	ND	ppbV	NC	25
1,2,4-Trichlorobenzene	ND	ND	ppbV	NC	25

Lab Duplicate Analysis
Batch Quality Control

Project Name: NBHS IRA O&M
Project Number: 115058

Lab Number: L1512531
Report Date: 06/11/15

Parameter	Native Sample	Duplicate Sample	Units	RPD	RPD Limits
MCP Volatile Organics in Air - Mansfield Lab Associated sample(s): 01 QC Batch ID: WG792374-5 QC Sample: L1512840-01 Client ID: DUP Sample					
Naphthalene	0.212	0.217	ppbV	2	25
Hexachlorobutadiene	ND	ND	ppbV	NC	25

Project Name: NBHS IRA O&M

Lab Number: L1512531

Project Number: 115058

Report Date: 06/11/15

Canister and Flow Controller Information

Samplenum	Client ID	Media ID	Media Type	Date Prepared	Bottle Order	Cleaning Batch ID	Can Leak Check	Initial Pressure (in. Hg)	Pressure on Receipt (in. Hg)	Flow Controler Leak Chk	Flow Out mL/min	Flow In mL/min	% RPD
L1512531-01	VAPOR INLET	0520	SV200	06/03/15	204663		-	-	-	Pass	217	217	0
L1512531-01	VAPOR INLET	358	2.7L Can	06/03/15	204663	L1511830-01	Pass	-29.9	-1.8	-	-	-	-
L1512531-02	VAPOR OUTLET	0599	SV200	06/03/15	204663		-	-	-	Pass	213	215	1
L1512531-02	VAPOR OUTLET	531	2.7L Can	06/03/15	204663	L1511830-01	Pass	-29.7	-2.5	-	-	-	-

Project Name: BATCH CANISTER CERTIFICATION **Lab Number:** L1511830

Project Number: CANISTER QC BAT **Report Date:** 06/11/15

Air Canister Certification Results

Lab ID:	L1511830-01	Date Collected:	05/28/15 18:00
Client ID:	CAN 158 SHELF 9	Date Received:	05/29/15
Sample Location:		Field Prep:	Not Specified
Matrix:	Air		
Anaytical Method:	48,TO-15		
Analytical Date:	05/29/15 15:25		
Analyst:	RY		

	ppbV			ug/m3				
Parameter	**Results**	**RL**	**MDL**	**Results**	**RL**	**MDL**	**Qualifier**	**Dilution Factor**
Volatile Organics in Air - Mansfield Lab								
Chlorodifluoromethane	ND	0.200	--	ND	0.707	--		1
Propylene	ND	0.500	--	ND	0.861	--		1
Dichlorodifluoromethane	ND	0.200	--	ND	0.989	--		1
Chloromethane	ND	0.200	--	ND	0.413	--		1
Freon-114	ND	0.200	--	ND	1.40	--		1
Methanol	ND	5.00	--	ND	6.55	--		1
Vinyl chloride	ND	0.200	--	ND	0.511	--		1
1,3-Butadiene	ND	0.200	--	ND	0.442	--		1
Butane	ND	0.200	--	ND	0.475	--		1
Bromomethane	ND	0.200	--	ND	0.777	--		1
Chloroethane	ND	0.200	--	ND	0.528	--		1
Ethanol	ND	2.50	--	ND	4.71	--		1
Dichlorofluoromethane	ND	0.200	--	ND	0.842	--		1
Vinyl bromide	ND	0.200	--	ND	0.874	--		1
Acrolein	ND	0.500	--	ND	1.15	--		1
Acetone	ND	1.00	--	ND	2.38	--		1
Acetonitrile	ND	0.200	--	ND	0.336	--		1
Trichlorofluoromethane	ND	0.200	--	ND	1.12	--		1
Isopropanol	ND	0.500	--	ND	1.23	--		1
Acrylonitrile	ND	0.500	--	ND	1.09	--		1
Pentane	ND	0.200	--	ND	0.590	--		1
Ethyl ether	ND	0.200	--	ND	0.606	--		1
1,1-Dichloroethene	ND	0.200	--	ND	0.793	--		1
Tertiary butyl Alcohol	ND	0.500	--	ND	1.52	--		1
Methylene chloride	ND	0.500	--	ND	1.74	--		1

Project Name: BATCH CANISTER CERTIFICATION **Lab Number:** L1511830

Project Number: CANISTER QC BAT **Report Date:** 06/11/15

Air Canister Certification Results

Lab ID: L1511830-01 Date Collected: 05/28/15 18:00

Client ID: CAN 158 SHELF 9 Date Received: 05/29/15

Sample Location: Field Prep: Not Specified

Parameter	ppbV Results	ppbV RL	ppbV MDL	ug/m3 Results	ug/m3 RL	ug/m3 MDL	Qualifier	Dilution Factor
Volatile Organics in Air - Mansfield Lab								
3-Chloropropene	ND	0.200	--	ND	0.626	--		1
Carbon disulfide	ND	0.200	--	ND	0.623	--		1
Freon-113	ND	0.200	--	ND	1.53	--		1
trans-1,2-Dichloroethene	ND	0.200	--	ND	0.793	--		1
1,1-Dichloroethane	ND	0.200	--	ND	0.809	--		1
Methyl tert butyl ether	ND	0.200	--	ND	0.721	--		1
Vinyl acetate	ND	1.00	--	ND	3.52	--		1
2-Butanone	ND	0.500	--	ND	1.47	--		1
cis-1,2-Dichloroethene	ND	0.200	--	ND	0.793	--		1
Ethyl Acetate	ND	0.500	--	ND	1.80	--		1
Chloroform	ND	0.200	--	ND	0.977	--		1
Tetrahydrofuran	ND	0.500	--	ND	1.47	--		1
2,2-Dichloropropane	ND	0.200	--	ND	0.924	--		1
1,2-Dichloroethane	ND	0.200	--	ND	0.809	--		1
n-Hexane	ND	0.200	--	ND	0.705	--		1
Diisopropyl ether	ND	0.200	--	ND	0.836	--		1
tert-Butyl Ethyl Ether	ND	0.200	--	ND	0.836	--		1
1,1,1-Trichloroethane	ND	0.200	--	ND	1.09	--		1
1,1-Dichloropropene	ND	0.200	--	ND	0.908	--		1
Benzene	ND	0.200	--	ND	0.639	--		1
Carbon tetrachloride	ND	0.200	--	ND	1.26	--		1
Cyclohexane	ND	0.200	--	ND	0.688	--		1
tert-Amyl Methyl Ether	ND	0.200	--	ND	0.836	--		1
Dibromomethane	ND	0.200	--	ND	1.42	--		1
1,2-Dichloropropane	ND	0.200	--	ND	0.924	--		1
Bromodichloromethane	ND	0.200	--	ND	1.34	--		1
1,4-Dioxane	ND	0.200	--	ND	0.721	--		1
Trichloroethene	ND	0.200	--	ND	1.07	--		1

Project Name: BATCH CANISTER CERTIFICATION **Lab Number:** L1511830

Project Number: CANISTER QC BAT **Report Date:** 06/11/15

Air Canister Certification Results

Lab ID: L1511830-01 Date Collected: 05/28/15 18:00

Client ID: CAN 158 SHELF 9 Date Received: 05/29/15

Sample Location: Field Prep: Not Specified

Parameter	ppbV Results	ppbV RL	ppbV MDL	ug/m3 Results	ug/m3 RL	ug/m3 MDL	Qualifier	Dilution Factor
Volatile Organics in Air - Mansfield Lab								
2,2,4-Trimethylpentane	ND	0.200	--	ND	0.934	--		1
Methyl Methacrylate	ND	0.500	--	ND	2.05	--		1
Heptane	ND	0.200	--	ND	0.820	--		1
cis-1,3-Dichloropropene	ND	0.200	--	ND	0.908	--		1
4-Methyl-2-pentanone	ND	0.500	--	ND	2.05	--		1
trans-1,3-Dichloropropene	ND	0.200	--	ND	0.908	--		1
1,1,2-Trichloroethane	ND	0.200	--	ND	1.09	--		1
Toluene	ND	0.200	--	ND	0.754	--		1
1,3-Dichloropropane	ND	0.200	--	ND	0.924	--		1
2-Hexanone	ND	0.200	--	ND	0.820	--		1
Dibromochloromethane	ND	0.200	--	ND	1.70	--		1
1,2-Dibromoethane	ND	0.200	--	ND	1.54	--		1
Butyl acetate	ND	0.500	--	ND	2.38	--		1
Octane	ND	0.200	--	ND	0.934	--		1
Tetrachloroethene	ND	0.200	--	ND	1.36	--		1
1,1,1,2-Tetrachloroethane	ND	0.200	--	ND	1.37	--		1
Chlorobenzene	ND	0.200	--	ND	0.921	--		1
Ethylbenzene	ND	0.200	--	ND	0.869	--		1
p/m-Xylene	ND	0.400	--	ND	1.74	--		1
Bromoform	ND	0.200	--	ND	2.07	--		1
Styrene	ND	0.200	--	ND	0.852	--		1
1,1,2,2-Tetrachloroethane	ND	0.200	--	ND	1.37	--		1
o-Xylene	ND	0.200	--	ND	0.869	--		1
1,2,3-Trichloropropane	ND	0.200	--	ND	1.21	--		1
Nonane	ND	0.200	--	ND	1.05	--		1
Isopropylbenzene	ND	0.200	--	ND	0.983	--		1
Bromobenzene	ND	0.200	--	ND	0.793	--		1
2-Chlorotoluene	ND	0.200	--	ND	1.04	--		1

Project Name: BATCH CANISTER CERTIFICATION **Lab Number:** L1511830

Project Number: CANISTER QC BAT **Report Date:** 06/11/15

Air Canister Certification Results

Lab ID: L1511830-01 Date Collected: 05/28/15 18:00

Client ID: CAN 158 SHELF 9 Date Received: 05/29/15

Sample Location: Field Prep: Not Specified

Parameter	ppbV Results	ppbV RL	ppbV MDL	ug/m3 Results	ug/m3 RL	ug/m3 MDL	Qualifier	Dilution Factor
Volatile Organics in Air - Mansfield Lab								
n-Propylbenzene	ND	0.200	--	ND	0.983	--		1
4-Chlorotoluene	ND	0.200	--	ND	1.04	--		1
4-Ethyltoluene	ND	0.200	--	ND	0.983	--		1
1,3,5-Trimethylbenzene	ND	0.200	--	ND	0.983	--		1
tert-Butylbenzene	ND	0.200	--	ND	1.10	--		1
1,2,4-Trimethylbenzene	ND	0.200	--	ND	0.983	--		1
Decane	ND	0.200	--	ND	1.16	--		1
Benzyl chloride	ND	0.200	--	ND	1.04	--		1
1,3-Dichlorobenzene	ND	0.200	--	ND	1.20	--		1
1,4-Dichlorobenzene	ND	0.200	--	ND	1.20	--		1
sec-Butylbenzene	ND	0.200	--	ND	1.10	--		1
p-Isopropyltoluene	ND	0.200	--	ND	1.10	--		1
1,2-Dichlorobenzene	ND	0.200	--	ND	1.20	--		1
n-Butylbenzene	ND	0.200	--	ND	1.10	--		1
1,2-Dibromo-3-chloropropane	ND	0.200	--	ND	1.93	--		1
Undecane	ND	0.200	--	ND	1.28	--		1
Dodecane	ND	0.200	--	ND	1.39	--		1
1,2,4-Trichlorobenzene	ND	0.200	--	ND	1.48	--		1
Naphthalene	ND	0.200	--	ND	1.05	--		1
1,2,3-Trichlorobenzene	ND	0.200	--	ND	1.48	--		1
Hexachlorobutadiene	ND	0.200	--	ND	2.13	--		1

	Results	Qualifier	Units	RDL	Dilution Factor
Tentatively Identified Compounds					
No Tentatively Identified Compounds					

Project Name: BATCH CANISTER CERTIFICATION **Lab Number:** L1511830

Project Number: CANISTER QC BAT **Report Date:** 06/11/15

Air Canister Certification Results

Lab ID: L1511830-01 Date Collected: 05/28/15 18:00

Client ID: CAN 158 SHELF 9 Date Received: 05/29/15

Sample Location: Field Prep: Not Specified

Parameter	ppbV Results	ppbV RL	ppbV MDL	ug/m3 Results	ug/m3 RL	ug/m3 MDL	Qualifier	Dilution Factor
Volatile Organics in Air - Mansfield Lab								

Internal Standard	% Recovery	Qualifier	Acceptance Criteria
1,4-Difluorobenzene	98		60-140
Bromochloromethane	97		60-140
chlorobenzene-d5	96		60-140

Project Name: BATCH CANISTER CERTIFICATION
Project Number: CANISTER QC BAT

Lab Number: L1511830
Report Date: 06/11/15

Air Canister Certification Results

Lab ID:	L1511830-01	Date Collected:	05/28/15 18:00
Client ID:	CAN 158 SHELF 9	Date Received:	05/29/15
Sample Location:		Field Prep:	Not Specified
Matrix:	Air		
Anaytical Method:	48,TO-15-SIM		
Analytical Date:	05/29/15 15:25		
Analyst:	RY		

	ppbV			ug/m3				
Parameter	**Results**	**RL**	**MDL**	**Results**	**RL**	**MDL**	**Qualifier**	**Dilution Factor**
Volatile Organics in Air by SIM - Mansfield Lab								
Dichlorodifluoromethane	ND	0.200	--	ND	0.989	--		1
Chloromethane	ND	0.200	--	ND	0.413	--		1
Freon-114	ND	0.050	--	ND	0.349	--		1
Vinyl chloride	ND	0.020	--	ND	0.051	--		1
1,3-Butadiene	ND	0.020	--	ND	0.044	--		1
Bromomethane	ND	0.020	--	ND	0.078	--		1
Chloroethane	ND	0.020	--	ND	0.053	--		1
Acetone	ND	1.00	--	ND	2.38	--		1
Trichlorofluoromethane	ND	0.050	--	ND	0.281	--		1
Acrylonitrile	ND	0.500	--	ND	1.09	--		1
1,1-Dichloroethene	ND	0.020	--	ND	0.079	--		1
Methylene chloride	ND	0.500	--	ND	1.74	--		1
Freon-113	ND	0.050	--	ND	0.383	--		1
Halothane	ND	0.050	--	ND	0.404	--		1
trans-1,2-Dichloroethene	ND	0.020	--	ND	0.079	--		1
1,1-Dichloroethane	ND	0.020	--	ND	0.081	--		1
Methyl tert butyl ether	ND	0.200	--	ND	0.721	--		1
2-Butanone	ND	0.500	--	ND	1.47	--		1
cis-1,2-Dichloroethene	ND	0.020	--	ND	0.079	--		1
Chloroform	ND	0.020	--	ND	0.098	--		1
1,2-Dichloroethane	ND	0.020	--	ND	0.081	--		1
1,1,1-Trichloroethane	ND	0.020	--	ND	0.109	--		1
Benzene	ND	0.100	--	ND	0.319	--		1
Carbon tetrachloride	ND	0.020	--	ND	0.126	--		1
1,2-Dichloropropane	ND	0.020	--	ND	0.092	--		1

Project Name: BATCH CANISTER CERTIFICATION **Lab Number:** L1511830

Project Number: CANISTER QC BAT **Report Date:** 06/11/15

Air Canister Certification Results

Lab ID: L1511830-01 Date Collected: 05/28/15 18:00

Client ID: CAN 158 SHELF 9 Date Received: 05/29/15

Sample Location: Field Prep: Not Specified

Parameter	ppbV Results	ppbV RL	ppbV MDL	ug/m3 Results	ug/m3 RL	ug/m3 MDL	Qualifier	Dilution Factor
Volatile Organics in Air by SIM - Mansfield Lab								
Bromodichloromethane	ND	0.020	--	ND	0.134	--		1
1,4-Dioxane	ND	0.100	--	ND	0.360	--		1
Trichloroethene	ND	0.020	--	ND	0.107	--		1
cis-1,3-Dichloropropene	ND	0.020	--	ND	0.091	--		1
4-Methyl-2-pentanone	ND	0.500	--	ND	2.05	--		1
trans-1,3-Dichloropropene	ND	0.020	--	ND	0.091	--		1
1,1,2-Trichloroethane	ND	0.020	--	ND	0.109	--		1
Toluene	ND	0.050	--	ND	0.188	--		1
Dibromochloromethane	ND	0.020	--	ND	0.170	--		1
1,2-Dibromoethane	ND	0.020	--	ND	0.154	--		1
Tetrachloroethene	ND	0.020	--	ND	0.136	--		1
1,1,1,2-Tetrachloroethane	ND	0.020	--	ND	0.137	--		1
Chlorobenzene	ND	0.020	--	ND	0.092	--		1
Ethylbenzene	ND	0.020	--	ND	0.087	--		1
p/m-Xylene	ND	0.040	--	ND	0.174	--		1
Bromoform	ND	0.020	--	ND	0.207	--		1
Styrene	ND	0.020	--	ND	0.085	--		1
1,1,2,2-Tetrachloroethane	ND	0.020	--	ND	0.137	--		1
o-Xylene	ND	0.020	--	ND	0.087	--		1
Isopropylbenzene	ND	0.200	--	ND	0.983	--		1
4-Ethyltoluene	ND	0.020	--	ND	0.098	--		1
1,3,5-Trimethybenzene	ND	0.020	--	ND	0.098	--		1
1,2,4-Trimethylbenzene	ND	0.020	--	ND	0.098	--		1
1,3-Dichlorobenzene	ND	0.020	--	ND	0.120	--		1
1,4-Dichlorobenzene	ND	0.020	--	ND	0.120	--		1
sec-Butylbenzene	ND	0.200	--	ND	1.10	--		1
p-Isopropyltoluene	ND	0.200	--	ND	1.10	--		1
1,2-Dichlorobenzene	ND	0.020	--	ND	0.120	--		1

Project Name: BATCH CANISTER CERTIFICATION **Lab Number:** L1511830

Project Number: CANISTER QC BAT **Report Date:** 06/11/15

Air Canister Certification Results

Lab ID: L1511830-01 Date Collected: 05/28/15 18:00

Client ID: CAN 158 SHELF 9 Date Received: 05/29/15

Sample Location: Field Prep: Not Specified

Parameter	ppbV Results	ppbV RL	ppbV MDL	ug/m3 Results	ug/m3 RL	ug/m3 MDL	Qualifier	Dilution Factor
Volatile Organics in Air by SIM - Mansfield Lab								
n-Butylbenzene	ND	0.200	--	ND	1.10	--		1
1,2,4-Trichlorobenzene	ND	0.050	--	ND	0.371	--		1
Naphthalene	ND	0.050	--	ND	0.262	--		1
1,2,3-Trichlorobenzene	ND	0.050	--	ND	0.371	--		1
Hexachlorobutadiene	ND	0.050	--	ND	0.533	--		1

Internal Standard	% Recovery	Qualifier	Acceptance Criteria
1,4-difluorobenzene	95		60-140
bromochloromethane	98		60-140
chlorobenzene-d5	94		60-140

Project Name: NBHS IRA O&M
Project Number: 115058

Lab Number: L1512531
Report Date: 06/11/15

Sample Receipt and Container Information

Were project specific reporting limits specified? YES

Reagent H2O Preserved Vials Frozen on: NA

Cooler Information **Custody Seal**

Cooler	
N/A	Absent

Container Information

Container ID	Container Type	Cooler	pH	Temp deg C	Pres	Seal	Analysis(*)
L1512531-01A	Canister - 2.7 Liter	N/A	NA		Y	Absent	MCP-TO15(30)
L1512531-02A	Canister - 2.7 Liter	N/A	NA		Y	Absent	MCP-TO15-SIM(30)

*Values in parentheses indicate holding time in days

Project Name:	NBHS IRA O&M	**Lab Number:**	L1512531
Project Number:	115058	**Report Date:**	06/11/15

GLOSSARY

Acronyms

EDL	- Estimated Detection Limit: This value represents the level to which target analyte concentrations are reported as estimated values, when those target analyte concentrations are quantified below the reporting limit (RL). The EDL includes any adjustments from dilutions, concentrations or moisture content, where applicable. The use of EDLs is specific to the analysis of PAHs using Solid-Phase Microextraction (SPME).
EPA	- Environmental Protection Agency.
LCS	- Laboratory Control Sample: A sample matrix, free from the analytes of interest, spiked with verified known amounts of analytes or a material containing known and verified amounts of analytes.
LCSD	- Laboratory Control Sample Duplicate: Refer to LCS.
LFB	- Laboratory Fortified Blank: A sample matrix, free from the analytes of interest, spiked with verified known amounts of analytes or a material containing known and verified amounts of analytes.
MDL	- Method Detection Limit: This value represents the level to which target analyte concentrations are reported as estimated values, when those target analyte concentrations are quantified below the reporting limit (RL). The MDL includes any adjustments from dilutions, concentrations or moisture content, where applicable.
MS	- Matrix Spike Sample: A sample prepared by adding a known mass of target analyte to a specified amount of matrix sample for which an independent estimate of target analyte concentration is available.
MSD	- Matrix Spike Sample Duplicate: Refer to MS.
NA	- Not Applicable.
NC	- Not Calculated: Term is utilized when one or more of the results utilized in the calculation are non-detect at the parameter's reporting unit.
NI	- Not Ignitable.
NP	- Non-Plastic: Term is utilized for the analysis of Atterberg Limits in soil.
RL	- Reporting Limit: The value at which an instrument can accurately measure an analyte at a specific concentration. The RL includes any adjustments from dilutions, concentrations or moisture content, where applicable.
RPD	- Relative Percent Difference: The results from matrix and/or matrix spike duplicates are primarily designed to assess the precision of analytical results in a given matrix and are expressed as relative percent difference (RPD). Values which are less than five times the reporting limit for any individual parameter are evaluated by utilizing the absolute difference between the values; although the RPD value will be provided in the report.
SRM	- Standard Reference Material: A reference sample of a known or certified value that is of the same or similar matrix as the associated field samples.

Footnotes

1	- The reference for this analyte should be considered modified since this analyte is absent from the target analyte list of the original method.

Terms

Total: With respect to Organic analyses, a 'Total' result is defined as the summation of results for individual isomers or Aroclors. If a 'Total' result is requested, the results of its individual components will also be reported. This is applicable to 'Total' results for methods 8260, 8081 and 8082.

Analytical Method: Both the document from which the method originates and the analytical reference method. (Example: EPA 8260B is shown as 1,8260B.) The codes for the reference method documents are provided in the References section of the Addendum.

Data Qualifiers

A	- Spectra identified as "Aldol Condensation Product".
B	- The analyte was detected above the reporting limit in the associated method blank. Flag only applies to associated field samples that have detectable concentrations of the analyte at less than ten times (10x) the concentration found in the blank. For MCP-related projects, flag only applies to associated field samples that have detectable concentrations of the analyte at less than ten times (10x) the concentration found in the blank. For DOD-related projects, flag only applies to associated field samples that have detectable concentrations of the analyte at less than ten times (10x) the concentration found in the blank AND the analyte was detected above one-half the reporting limit (or above the reporting limit for common lab contaminants) in the associated method blank. For NJ-Air-related projects, flag only applies to associated field samples that have detectable concentrations of the analyte above the reporting limit. For NJ-related projects (excluding Air), flag only applies to associated field samples that have detectable concentrations of the analyte, which was detected above the reporting limit in the associated method blank or above five times the reporting limit for common lab contaminants (Phthalates, Acetone, Methylene Chloride, 2-Butanone).
C	- Co-elution: The target analyte co-elutes with a known lab standard (i.e. surrogate, internal standards, etc.) for co-extracted analyses.
D	- Concentration of analyte was quantified from diluted analysis. Flag only applies to field samples that have detectable concentrations of the analyte.

Report Format: Data Usability Report

Project Name:	NBHS IRA O&M	**Lab Number:**	L1512531
Project Number:	115058	**Report Date:**	06/11/15

Data Qualifiers

E - Concentration of analyte exceeds the range of the calibration curve and/or linear range of the instrument.

G - The concentration may be biased high due to matrix interferences (i.e, co-elution) with non-target compound(s). The result should be considered estimated.

H - The analysis of pH was performed beyond the regulatory-required holding time of 15 minutes from the time of sample collection.

I - The lower value for the two columns has been reported due to obvious interference.

M - Reporting Limit (RL) exceeds the MCP CAM Reporting Limit for this analyte.

NJ - Presumptive evidence of compound. This represents an estimated concentration for Tentatively Identified Compounds (TICs), where the identification is based on a mass spectral library search.

P - The RPD between the results for the two columns exceeds the method-specified criteria.

Q - The quality control sample exceeds the associated acceptance criteria. For DOD-related projects, LCS and/or Continuing Calibration Standard exceedences are also qualified on all associated sample results. Note: This flag is not applicable for matrix spike recoveries when the sample concentration is greater than 4x the spike added or for batch duplicate RPD when the sample concentrations are less than 5x the RL. (Metals only.)

R - Analytical results are from sample re-analysis.

RE - Analytical results are from sample re-extraction.

S - Analytical results are from modified screening analysis.

J - Estimated value. This represents an estimated concentration for Tentatively Identified Compounds (TICs).

ND - Not detected at the reporting limit (RL) for the sample.

Report Format: Data Usability Report

Project Name: NBHS IRA O&M
Project Number: 115058
Lab Number: L1512531
Report Date: 06/11/15

REFERENCES

101 Compendium of Methods for the Determination of Toxic Organic Compounds in Ambient Air (EPA/625/R-96/010b:January 1999) with QC Requirements & Performance Standards for the Analysis of TO-15 under the Massachusetts Contingency Plan, WSC-CAM-IXB, July 2010.

LIMITATION OF LIABILITIES

Alpha Analytical performs services with reasonable care and diligence normal to the analytical testing laboratory industry. In the event of an error, the sole and exclusive responsibility of Alpha Analytical shall be to re-perform the work at it's own expense. In no event shall Alpha Analytical be held liable for any incidental, consequential or special damages, including but not limited to, damages in any way connected with the use of, interpretation of, information or analysis provided by Alpha Analytical.

We strongly urge our clients to comply with EPA protocol regarding sample volume, preservation, cooling, containers, sampling procedures, holding time and splitting of samples in the field.

Certification Information

Last revised December 16, 2014

The following analytes are not included in our NELAP Scope of Accreditation:

Westborough Facility
EPA 524.2: Acetone, 2-Butanone (Methyl ethyl ketone (MEK)), Tert-butyl alcohol, 2-Hexanone, Tetrahydrofuran, 1,3,5-Trichlorobenzene, 4-Methyl-2-pentanone (MIBK), Carbon disulfide, Diethyl ether.
EPA 8260C: 1,2,4,5-Tetramethylbenzene, 4-Ethyltoluene, Iodomethane (methyl iodide), Methyl methacrylate, Azobenzene.
EPA 8270D: 1-Methylnaphthalene, Dimethylnaphthalene,1,4-Diphenylhydrazine.
EPA 625: 4-Chloroaniline, 4-Methylphenol.
SM4500: Soil: Total Phosphorus, TKN, NO2, NO3.
EPA 9071: Total Petroleum Hydrocarbons, Oil & Grease.

Mansfield Facility
EPA 8270D: Biphenyl.
EPA 2540D: TSS
EPA TO-15: Halothane, 2,4,4-Trimethyl-2-pentene, 2,4,4-Trimethyl-1-pentene, Thiophene, 2-Methylthiophene, 3-Methylthiophene, 2-Ethylthiophene, 1,2,3-Trimethylbenzene, Indan, Indene, 1,2,4,5-Tetramethylbenzene, Benzothiophene, 1-Methylnaphthalene.

The following analytes are included in our Massachusetts DEP Scope of Accreditation, Westborough Facility:

Drinking Water
EPA 200.8: Sb,As,Ba,Be,Cd,Cr,Cu,Pb,Ni,Se,Tl; **EPA 200.7**: Ba,Be,Ca,Cd,Cr,Cu,Na; **EPA 245.1:** Mercury;
EPA 300.0: Nitrate-N, Fluoride, Sulfate; **EPA 353.2**: Nitrate-N, Nitrite-N; **SM4500NO3-F**: Nitrate-N, Nitrite-N; **SM4500F-C, SM4500CN-CE, EPA 180.1, SM2130B, SM4500Cl-D, SM2320B, SM2540C, SM4500H-B**
EPA 332: Perchlorate.
Microbiology: **SM9215B; SM9223-P/A, SM9223B-Colilert-QT, Enterolert-QT.**

Non-Potable Water
EPA 200.8: Al,Sb,As,Be,Cd,Cr,Cu,Pb,Mn,Ni,Se,Ag,Tl,Zn;
EPA 200.7: Al,Sb,As,Be,Cd,Ca,Cr,Co,Cu,Fe,Pb,Mg,Mn,Mo,Ni,K,Se,Ag,Na,Sr,Ti,Tl,V,Zn;
EPA 245.1, SM4500H,B, EPA 120.1, SM2510B, SM2540C, SM2340B, SM2320B, SM4500CL-E, SM4500F-BC, SM426C, SM4500NH3-BH, **EPA 350.1**: Ammonia-N, **LACHAT 10-107-06-1-B**: Ammonia-N, **SM4500NO3-F,**
EPA 353.2: Nitrate-N**, SM4500NH3-BC-NES, EPA 351.1, SM4500P-E, SM4500P-B, E, SM5220D, EPA 410.4, SM5210B, SM5310C, SM4500CL-D, EPA 1664, SM14 510AC, EPA 420.1, SM4500-CN-CE, SM2540D.**
EPA 624: Volatile Halocarbons & Aromatics,
EPA 608: Chlordane, Toxaphene, Aldrin, alpha-BHC, beta-BHC, gamma-BHC, delta-BHC, Dieldrin, DDD, DDE, DDT, Endosulfan I, Endosulfan II, Endosulfan sulfate, Endrin, Endrin Aldehyde, Heptachlor, Heptachlor Epoxide, PCBs
EPA 625: SVOC (Acid/Base/Neutral Extractables), **EPA 600/4-81-045**: PCB-Oil.
Microbiology: **SM9223B-Colilert-QT; Enterolert-QT, SM9222D-MF**.

For a complete listing of analytes and methods, please contact your Alpha Project Manager.

AIR ANALYSIS

PAGE 1 OF 1

CHAIN OF CUSTODY

ALPHA ANALYTICAL
320 Forbes Blvd, Mansfield, MA 02048
TEL: 508-822-9300 FAX: 508-822-3288

Date Rec'd in Lab: 6/5/15

ALPHA Job #: L1512531

Client Information

Client: TRC
Address: 650 SUFFOLK ST
LOWELL MA
Phone: 978-970-5600
Fax:
Email: DSULLIVAN@TRCSOLUTIONS.COM
☐ These samples have been previously analyzed by Alpha

Project Information

Project Name: NBHS IRA O&M
Project Location: NEW BEDFORD
Project #: 115058
Project Manager: DAVID SULLIVAN
ALPHA Quote #:

Turn-Around Time

☑ Standard ☐ RUSH (only confirmed if pre-approved!)
Date Due: Time:

Report Information - Data Deliverables

☐ FAX
☑ ADEx
Criteria Checker:
(Default based on Regulatory Criteria Indicated)
Other Formats:
☑ EMAIL (standard pdf report)
☐ Additional Deliverables:
Report to: (if different than Project Manager)

Billing Information

☐ Same as Client info PO #: C115058

Regulatory Requirements/Report Limits

State/Fed	Program	Criteria

Other Project Specific Requirements/Comments:

All Columns Below Must Be Filled Out

ALPHA Lab ID (Lab Use Only)	Sample ID	Collection Date	Start Time	End Time	Initial Vacuum	Final Vacuum	Sample Matrix*	Sampler's Initials	Can Size	I D Can	I D - Flow Controller	TO-14A by TO-15	TO-15	TO-15 SIM	APH	FIXED GASES	TO-13A	TO-4 / TO-10	Sample Comments (i.e. PID)
L2531-01	VAPOR INLET	6/4/15	9:15	9:28	-30	-2.5	SV	JF	2.7	358	0520		✓						
-02	VAPOR OUTLET	6/4/15	9:18	9:31	-29.8	-2.5	O	JF	2.7	531	0599			✓					

*SAMPLE MATRIX CODES
AA = Ambient Air (Indoor/Outdoor)
SV = Soil Vapor/Landfill Gas/SVE
Other = Please Specify

Container Type			CS	CS			

Relinquished By:	Date/Time	Received By:	Date/Time:
Jason C. Fiero	6/5/15	[signature]	6/5/15 1230

Please print clearly, legibly and completely. Samples can not be logged in and turnaround time clock will not start until any ambiguities are resolved. All samples submitted are subject to Alpha's Terms and Conditions. See reverse side.

Form No: 101-02 (1-Jun-09)

ANALYTICAL REPORT

Lab Number:	L1512517
Client:	TRC Environmental Consultants Wannalancit Mills 650 Suffolk Street Lowell, MA 01854
ATTN:	David Sullivan
Phone:	(978) 656-3565
Project Name:	NBHS IRA O&M
Project Number:	115058
Report Date:	06/19/15

The original project report/data package is held by Alpha Analytical. This report/data package is paginated and should be reproduced only in its entirety. Alpha Analytical holds no responsibility for results and/or data that are not consistent with the original.

Certifications & Approvals: NY (11627), CT (PH-0141), NH (2206), NJ NELAP (MA015), RI (LAO00299), ME (MA00030), PA (68-02089), VA (460194), LA NELAP (03090), FL (E87814), TX (T104704419), WA (C954), USFWS (Permit #LE2069641), USDA (Permit #P330-11-00109), US Army Corps of Engineers.

320 Forbes Boulevard, Mansfield, MA 02048-1806
508-822-9300 (Fax) 508-822-3288 800-624-9220 - www.alphalab.com

Project Name: NBHS IRA O&M
Project Number: 115058

Lab Number: L1512517
Report Date: 06/19/15

Alpha Sample ID	Client ID	Matrix	Sample Location	Collection Date/Time	Receive Date
L1512517-01	VAPOR INLET	AIR MEDIA	NEW BEDFORD, MA	06/04/15 13:45	06/05/15
L1512517-02	VAPOR OUTLET	AIR MEDIA	NEW BEDFORD, MA	06/04/15 13:50	06/05/15

Project Name: NBHS IRA O&M
Project Number: 115058

Lab Number: L1512517
Report Date: 06/19/15

Case Narrative

The samples were received in accordance with the Chain of Custody and no significant deviations were encountered during the preparation or analysis unless otherwise noted. Sample Receipt, Container Information, and the Chain of Custody are located at the back of the report.

Results contained within this report relate only to the samples submitted under this Alpha Lab Number and meet all of the requirements of NELAC, for all NELAC accredited parameters. The data presented in this report is organized by parameter (i.e. VOC, SVOC, etc.). Sample specific Quality Control data (i.e. Surrogate Spike Recovery) is reported at the end of the target analyte list for each individual sample, followed by the Laboratory Batch Quality Control at the end of each parameter. If a sample was re-analyzed or re-extracted due to a required quality control corrective action and if both sets of data are reported, the Laboratory ID of the re-analysis or re-extraction is designated with an "R" or "RE", respectively. When multiple Batch Quality Control elements are reported (e.g. more than one LCS), the associated samples for each element are noted in the grey shaded header line of each data table. Any Laboratory Batch, Sample Specific % recovery or RPD value that is outside the listed Acceptance Criteria is bolded in the report. All specific QC information is also incorporated in the Data Usability format of our Data Merger tool where it can be reviewed along with any associated usability implications. Soil/sediments, solids and tissues are reported on a dry weight basis unless otherwise noted. Definitions of all data qualifiers and acronyms used in this report are provided in the Glossary located at the back of the report.

In reference to questions H (CAM) or 4 (RCP) when "NO" is checked, the performance criteria for CAM and RCP methods allow for some quality control failures to occur and still be within method compliance. In these instances the specific failure is not narrated but noted in the associated QC table. The information is also incorporated in the Data Usability format of our Data Merger tool where it can be reviewed along with any associated usability implications.

Please see the associated ADEx data file for a comparison of laboratory reporting limits that were achieved with the regulatory Numerical Standards requested on the Chain of Custody.

HOLD POLICY
For samples submitted on hold, Alpha's policy is to hold samples (with the exception of Air canisters) free of charge for 21 calendar days from the date the project is completed. After 21 calendar days, we will dispose of all samples submitted including those put on hold unless you have contacted your Client Service Representative and made arrangements for Alpha to continue to hold the samples. Air canisters will be disposed after 3 business days from the date the project is completed.

Please contact Client Services at 800-624-9220 with any questions.

Project Name: NBHS IRA O&M
Project Number: 115058

Lab Number: L1512517
Report Date: 06/19/15

Case Narrative (continued)

PCBs in Air

I, the undersigned, attest under the pains and penalties of perjury that, to the best of my knowledge and belief and based upon my personal inquiry of those responsible for providing the information contained in this analytical report, such information is accurate and complete. This certificate of analysis is not complete unless this page accompanies any and all pages of this report.

Authorized Signature: Christopher J. Anderson

Title: Technical Director/Representative

Date: 06/19/15

AIR

Project Name: NBHS IRA O&M

Project Number: 115058

Lab Number: L1512517

Report Date: 06/19/15

SAMPLE RESULTS

Lab ID: L1512517-01
Client ID: VAPOR INLET
Sample Location: NEW BEDFORD, MA
Matrix: Air Media
Analytical Method: 48,TO-10A
Analytical Date: 06/18/15 21:17
Analyst: SF

Date Collected: 06/04/15 13:45
Date Received: 06/05/15
Field Prep: Not Specified
Extraction Method: EPA 3540C
Extraction Date: 06/10/15 10:00

Parameter	Result	Qualifier	Units	RL	MDL	Dilution Factor	Column
PCB Aroclors in Air - Mansfield Lab							
Aroclor 1016	ND		ng/cart	30.0	--	1	A
Aroclor 1221	ND		ng/cart	100	--	1	A
Aroclor 1232	ND		ng/cart	30.0	--	1	A
Aroclor 1242	ND		ng/cart	20.0	--	1	A
Aroclor 1248	402		ng/cart	20.0	--	1	B
Aroclor 1254	ND		ng/cart	20.0	--	1	A
Aroclor 1260	ND		ng/cart	20.0	--	1	A
Aroclor 1262	ND		ng/cart	20.0	--	1	A
Aroclor 1268	ND		ng/cart	20.0	--	1	A

Surrogate	% Recovery	Qualifier	Acceptance Criteria	Column
Tetrachloro-meta-Xylene	91		60-120	A
Decachlorobiphenyl	95		60-120	A
Tetrachloro-meta-Xylene	92		60-120	B
Decachlorobiphenyl	103		60-120	B

Project Name: NBHS IRA O&M
Project Number: 115058
Lab Number: L1512517
Report Date: 06/19/15

SAMPLE RESULTS

Lab ID: L1512517-02
Client ID: VAPOR OUTLET
Sample Location: NEW BEDFORD, MA
Matrix: Air Media
Analytical Method: 48,TO-10A
Analytical Date: 06/18/15 15:13
Analyst: SF

Date Collected: 06/04/15 13:50
Date Received: 06/05/15
Field Prep: Not Specified
Extraction Method: EPA 3540C
Extraction Date: 06/10/15 10:00

Parameter	Result	Qualifier	Units	RL	MDL	Dilution Factor	Column
PCB Aroclors in Air - Mansfield Lab							
Aroclor 1016	ND		ng/cart	30.0	--	1	A
Aroclor 1221	ND		ng/cart	100	--	1	A
Aroclor 1232	ND		ng/cart	30.0	--	1	A
Aroclor 1242	ND		ng/cart	20.0	--	1	A
Aroclor 1248	ND		ng/cart	20.0	--	1	A
Aroclor 1254	ND		ng/cart	20.0	--	1	A
Aroclor 1260	ND		ng/cart	20.0	--	1	A
Aroclor 1262	ND		ng/cart	20.0	--	1	A
Aroclor 1268	ND		ng/cart	20.0	--	1	A

Surrogate	% Recovery	Qualifier	Acceptance Criteria	Column
Tetrachloro-meta-Xylene	80		60-120	A
Decachlorobiphenyl	84		60-120	A
Tetrachloro-meta-Xylene	79		60-120	B
Decachlorobiphenyl	90		60-120	B

Project Name: NBHS IRA O&M
Project Number: 115058

Lab Number: L1512517
Report Date: 06/19/15

Method Blank Analysis
Batch Quality Control

Analytical Method: 48,TO-10A
Analytical Date: 06/18/15 13:12
Analyst: SF

Extraction Method: EPA 3540C
Extraction Date: 06/10/15 10:00

Parameter	Result	Qualifier	Units	RL	MDL	Column
PCB Aroclors in Air - Mansfield Lab for sample(s): 01-02 Batch: WG792217-1						
Aroclor 1016	ND		ng/cart	30.0	--	A
Aroclor 1221	ND		ng/cart	100	--	A
Aroclor 1232	ND		ng/cart	30.0	--	A
Aroclor 1242	ND		ng/cart	20.0	--	A
Aroclor 1248	ND		ng/cart	20.0	--	A
Aroclor 1254	ND		ng/cart	20.0	--	A
Aroclor 1260	ND		ng/cart	20.0	--	A
Aroclor 1262	ND		ng/cart	20.0	--	A
Aroclor 1268	ND		ng/cart	20.0	--	A

Surrogate	%Recovery	Qualifier	Acceptance Criteria	Column
Tetrachloro-meta-Xylene	87		60-120	A
Decachlorobiphenyl	98		60-120	A
Tetrachloro-meta-Xylene	89		60-120	B
Decachlorobiphenyl	104		60-120	B

Lab Control Sample Analysis
Batch Quality Control

Project Name: NBHS IRA O&M
Project Number: 115058

Lab Number: L1512517
Report Date: 06/19/15

Parameter	LCS %Recovery	Qual	LCSD %Recovery	Qual	%Recovery Limits	RPD	Qual	RPD Limits	Column
PCB Aroclors in Air - Mansfield Lab Associated sample(s): 01-02 Batch: WG792217-2									
Aroclor 1016	84		-		40-140	-		50	A
Aroclor 1260	99		-		40-140	-		50	A

Surrogate	LCS %Recovery	Qual	LCSD %Recovery	Qual	Acceptance Criteria	Column
Tetrachloro-meta-Xylene	92				60-120	A
Decachlorobiphenyl	101				60-120	A
Tetrachloro-meta-Xylene	97				60-120	B
Decachlorobiphenyl	109				60-120	B

Project Name: NBHS IRA O&M
Project Number: 115058

Lab Number: L1512517
Report Date: 06/19/15

Sample Receipt and Container Information

Were project specific reporting limits specified? YES

Reagent H2O Preserved Vials Frozen on: NA

Cooler Information Custody Seal

Cooler	
A	Absent

Container Information

Container ID	Container Type	Cooler	pH	Temp deg C	Pres	Seal	Analysis(*)
L1512517-01A	PUF Air Cartridge - High or Low	A	N/A	2.3	Y	Absent	A2-TO10-AROCLOR(7)
L1512517-02A	PUF Air Cartridge - High or Low	A	N/A	2.3	Y	Absent	A2-TO10-AROCLOR(7)

*Values in parentheses indicate holding time in days

Project Name:	NBHS IRA O&M	**Lab Number:**	L1512517
Project Number:	115058	**Report Date:**	06/19/15

GLOSSARY

Acronyms

EDL	- Estimated Detection Limit: This value represents the level to which target analyte concentrations are reported as estimated values, when those target analyte concentrations are quantified below the reporting limit (RL). The EDL includes any adjustments from dilutions, concentrations or moisture content, where applicable. The use of EDLs is specific to the analysis of PAHs using Solid-Phase Microextraction (SPME).
EPA	- Environmental Protection Agency.
LCS	- Laboratory Control Sample: A sample matrix, free from the analytes of interest, spiked with verified known amounts of analytes or a material containing known and verified amounts of analytes.
LCSD	- Laboratory Control Sample Duplicate: Refer to LCS.
LFB	- Laboratory Fortified Blank: A sample matrix, free from the analytes of interest, spiked with verified known amounts of analytes or a material containing known and verified amounts of analytes.
MDL	- Method Detection Limit: This value represents the level to which target analyte concentrations are reported as estimated values, when those target analyte concentrations are quantified below the reporting limit (RL). The MDL includes any adjustments from dilutions, concentrations or moisture content, where applicable.
MS	- Matrix Spike Sample: A sample prepared by adding a known mass of target analyte to a specified amount of matrix sample for which an independent estimate of target analyte concentration is available.
MSD	- Matrix Spike Sample Duplicate: Refer to MS.
NA	- Not Applicable.
NC	- Not Calculated: Term is utilized when one or more of the results utilized in the calculation are non-detect at the parameter's reporting unit.
NI	- Not Ignitable.
NP	- Non-Plastic: Term is utilized for the analysis of Atterberg Limits in soil.
RL	- Reporting Limit: The value at which an instrument can accurately measure an analyte at a specific concentration. The RL includes any adjustments from dilutions, concentrations or moisture content, where applicable.
RPD	- Relative Percent Difference: The results from matrix and/or matrix spike duplicates are primarily designed to assess the precision of analytical results in a given matrix and are expressed as relative percent difference (RPD). Values which are less than five times the reporting limit for any individual parameter are evaluated by utilizing the absolute difference between the values; although the RPD value will be provided in the report.
SRM	- Standard Reference Material: A reference sample of a known or certified value that is of the same or similar matrix as the associated field samples.

Footnotes

1	- The reference for this analyte should be considered modified since this analyte is absent from the target analyte list of the original method.

Terms

Total: With respect to Organic analyses, a 'Total' result is defined as the summation of results for individual isomers or Aroclors. If a 'Total' result is requested, the results of its individual components will also be reported. This is applicable to 'Total' results for methods 8260, 8081 and 8082.

Analytical Method: Both the document from which the method originates and the analytical reference method. (Example: EPA 8260B is shown as 1,8260B.) The codes for the reference method documents are provided in the References section of the Addendum.

Data Qualifiers

A	- Spectra identified as "Aldol Condensation Product".
B	- The analyte was detected above the reporting limit in the associated method blank. Flag only applies to associated field samples that have detectable concentrations of the analyte at less than ten times (10x) the concentration found in the blank. For MCP-related projects, flag only applies to associated field samples that have detectable concentrations of the analyte at less than ten times (10x) the concentration found in the blank. For DOD-related projects, flag only applies to associated field samples that have detectable concentrations of the analyte at less than ten times (10x) the concentration found in the blank AND the analyte was detected above one-half the reporting limit (or above the reporting limit for common lab contaminants) in the associated method blank. For NJ-Air-related projects, flag only applies to associated field samples that have detectable concentrations of the analyte above the reporting limit. For NJ-related projects (excluding Air), flag only applies to associated field samples that have detectable concentrations of the analyte, which was detected above the reporting limit in the associated method blank or above five times the reporting limit for common lab contaminants (Phthalates, Acetone, Methylene Chloride, 2-Butanone).
C	- Co-elution: The target analyte co-elutes with a known lab standard (i.e. surrogate, internal standards, etc.) for co-extracted analyses.
D	- Concentration of analyte was quantified from diluted analysis. Flag only applies to field samples that have detectable concentrations of the analyte.

Report Format: Data Usability Report

Project Name:	NBHS IRA O&M	**Lab Number:**	L1512517
Project Number:	115058	**Report Date:**	06/19/15

Data Qualifiers

E - Concentration of analyte exceeds the range of the calibration curve and/or linear range of the instrument.

G - The concentration may be biased high due to matrix interferences (i.e, co-elution) with non-target compound(s). The result should be considered estimated.

H - The analysis of pH was performed beyond the regulatory-required holding time of 15 minutes from the time of sample collection.

I - The lower value for the two columns has been reported due to obvious interference.

M - Reporting Limit (RL) exceeds the MCP CAM Reporting Limit for this analyte.

NJ - Presumptive evidence of compound. This represents an estimated concentration for Tentatively Identified Compounds (TICs), where the identification is based on a mass spectral library search.

P - The RPD between the results for the two columns exceeds the method-specified criteria.

Q - The quality control sample exceeds the associated acceptance criteria. For DOD-related projects, LCS and/or Continuing Calibration Standard exceedences are also qualified on all associated sample results. Note: This flag is not applicable for matrix spike recoveries when the sample concentration is greater than 4x the spike added or for batch duplicate RPD when the sample concentrations are less than 5x the RL. (Metals only.)

R - Analytical results are from sample re-analysis.

RE - Analytical results are from sample re-extraction.

S - Analytical results are from modified screening analysis.

J - Estimated value. This represents an estimated concentration for Tentatively Identified Compounds (TICs).

ND - Not detected at the reporting limit (RL) for the sample.

Report Format: Data Usability Report

REFERENCES

48 Compendium of Methods for the Determination of Toxic Organic Compounds in Ambient Air. Second Edition. EPA/625/R-96/010b, January 1999.

LIMITATION OF LIABILITIES

Alpha Analytical performs services with reasonable care and diligence normal to the analytical testing laboratory industry. In the event of an error, the sole and exclusive responsibility of Alpha Analytical shall be to re-perform the work at it's own expense. In no event shall Alpha Analytical be held liable for any incidental, consequential or special damages, including but not limited to, damages in any way connected with the use of, interpretation of, information or analysis provided by Alpha Analytical.

We strongly urge our clients to comply with EPA protocol regarding sample volume, preservation, cooling, containers, sampling procedures, holding time and splitting of samples in the field.

Certification Information

Last revised December 16, 2014

The following analytes are not included in our NELAP Scope of Accreditation:

Westborough Facility
EPA 524.2: Acetone, 2-Butanone (Methyl ethyl ketone (MEK)), Tert-butyl alcohol, 2-Hexanone, Tetrahydrofuran, 1,3,5-Trichlorobenzene, 4-Methyl-2-pentanone (MIBK), Carbon disulfide, Diethyl ether.
EPA 8260C: 1,2,4,5-Tetramethylbenzene, 4-Ethyltoluene, Iodomethane (methyl iodide), Methyl methacrylate, Azobenzene.
EPA 8270D: 1-Methylnaphthalene, Dimethylnaphthalene,1,4-Diphenylhydrazine.
EPA 625: 4-Chloroaniline, 4-Methylphenol.
SM4500: Soil: Total Phosphorus, TKN, NO2, NO3.
EPA 9071: Total Petroleum Hydrocarbons, Oil & Grease.

Mansfield Facility
EPA 8270D: Biphenyl.
EPA 2540D: TSS
EPA TO-15: Halothane, 2,4,4-Trimethyl-2-pentene, 2,4,4-Trimethyl-1-pentene, Thiophene, 2-Methylthiophene, 3-Methylthiophene, 2-Ethylthiophene, 1,2,3-Trimethylbenzene, Indan, Indene, 1,2,4,5-Tetramethylbenzene, Benzothiophene, 1-Methylnaphthalene.

The following analytes are included in our Massachusetts DEP Scope of Accreditation, Westborough Facility:

Drinking Water
EPA 200.8: Sb,As,Ba,Be,Cd,Cr,Cu,Pb,Ni,Se,Tl; **EPA 200.7**: Ba,Be,Ca,Cd,Cr,Cu,Na; **EPA 245.1:** Mercury;
EPA 300.0: Nitrate-N, Fluoride, Sulfate; **EPA 353.2**: Nitrate-N, Nitrite-N; **SM4500NO3-F**: Nitrate-N, Nitrite-N; **SM4500F-C, SM4500CN-CE, EPA 180.1, SM2130B, SM4500Cl-D, SM2320B, SM2540C, SM4500H-B**
EPA 332: Perchlorate.
Microbiology: **SM9215B; SM9223-P/A, SM9223B-Colilert-QT, Enterolert-QT.**

Non-Potable Water
EPA 200.8: Al,Sb,As,Be,Cd,Cr,Cu,Pb,Mn,Ni,Se,Ag,Tl,Zn;
EPA 200.7: Al,Sb,As,Be,Cd,Ca,Cr,Co,Cu,Fe,Pb,Mg,Mn,Mo,Ni,K,Se,Ag,Na,Sr,Ti,Tl,V,Zn;
EPA 245.1, SM4500H,B, EPA 120.1, SM2510B, SM2540C, SM2340B, SM2320B, SM4500CL-E, SM4500F-BC, SM426C, SM4500NH3-BH, **EPA 350.1**: Ammonia-N, **LACHAT 10-107-06-1-B**: Ammonia-N, **SM4500NO3-F,**
EPA 353.2: Nitrate-N**, SM4500NH3-BC-NES, EPA 351.1, SM4500P-E, SM4500P-B, E, SM5220D, EPA 410.4, SM5210B, SM5310C, SM4500CL-D, EPA 1664, SM14 510AC, EPA 420.1, SM4500-CN-CE, SM2540D.**
EPA 624: Volatile Halocarbons & Aromatics,
EPA 608: Chlordane, Toxaphene, Aldrin, alpha-BHC, beta-BHC, gamma-BHC, delta-BHC, Dieldrin, DDD, DDE, DDT, Endosulfan I, Endosulfan II, Endosulfan sulfate, Endrin, Endrin Aldehyde, Heptachlor, Heptachlor Epoxide, PCBs
EPA 625: SVOC (Acid/Base/Neutral Extractables), **EPA 600/4-81-045**: PCB-Oil.
Microbiology: **SM9223B-Colilert-QT; Enterolert-QT, SM9222D-MF**.

For a complete listing of analytes and methods, please contact your Alpha Project Manager.

AIR ANALYSIS - SORBENT MEDIA
CHAIN OF CUSTODY

Page 1 of 1

Date Rec'd in Lab: 6/5/15

ALPHA Job #: L1512517

Westborough, MA
TEL: 508-898-9220
FAX: 508-822-3288

Mansfield, MA
TEL: 508-822-9300
508-822-3288

Client Information

Client: TRC
Address: 650 SUFFOLK ST.
LOWELL MA.
Phone: 978-970-5600
Fax:
Email:

Project Information

Project Name: NBHS IRA O+M
Project Location: NEW BEDFORD MA.
Project #: 115058
(Use Project name as Project #) ☐
Project Manager: DAVID SULLIVAN
ALPHA Quote #:

Turn-Around Time

Standard ☑ Due Date:
Rush (only if pre approved) ☐ Time:

Report Information - Data Deliverables

☐ FAX
☑ ADEx
Criteria Checker:
Other Formats:
☑ EMAIL
☐ Add'l Deliverables

Report to: (if different than Project Manager)

Billing Information

☐ Same as Client Info
PO #: C115058

Regulatory Requirements/Report Limits

State/Fed	Program	Criteria

These samples have been previously analyzed by Alpha ☐

Other Project Specific Requirements/ Comments/Detection Limits

For PCBs, selection is REQUIRED:
☐ Congeners
☐ Homologs
☑ Aroclors (Low Vol only)

NOTE: For metals, please specify elements of interest and media type.
☐ PM-10
☐ TSP
☐ MCE

All Columns Below Must Be Filled Out

ALPHA Lab ID (Lab Use Only)	Sample ID	Collection Date	Start Time	End Time	Flow Rate (L/min)	Total Volume (L)	Sample Matrix*	Sampler's Initials	Media ID# (1)	TO-13A	PCBs (High Vol)	PCBs (Low Vol)	TO-11A	Hg via NIOSH 6009 Mod.	Metals	TO-17		Sample Comments (i.e. PID)
12517-01	VAPOR INLET	6/4/15	9:45	13:45	5	1200	SV	JF	N010			✓						102°
-02	VAPOR OUTLET	6/4/15	9:50	13:50	5	1200	O	JF	N014			✓						98°
Media Type										P	P	P	D	T	F	T		

* SAMPLE MATRIX CODES
AA = Ambient Air (Indoor/Outdoor)
SV = Soil Vapor/Landfill Gas/SVE
Other = Please Specify

(1) Required for PUF cartridges, PM-10 and TSP filters and TO-17 sorbent tubes.

Media Code
D = DNPH Cartridge
F = Filter
P = PUF Cartridge
T = Sorbent Tube
O = Other

Relinquished By:	Date/Time	Received By:	Date/Time
Jason C. Fiero	6/5/15	[illegible]	6/5/15 12:30

Please print clearly, legibly and completely. Samples can not be logged in and turnaround time clock will not start until any ambiguities are resolved. BY EXECUTING THIS COC, THE CLIENT HAS READ AND AGREES TO BE BOUND BY ALPHA'S TERMS & CONDITIONS. (See reverse side.)

Form No: 101-13 (rev 01-OCT-2013)

Sample Results

Lab ID:	L1512517-01	Sampling Time:	4	hrs
		Sampling Rate:	5	L/min
Matrix:	Air Media	Total Flow:	1200	L

PCB Aroclors in Air

	ng/cart				ug/m3				Dilution	
Parameter	**Result**	**Units**	**RL**	**MDL**	**Result**	**Units**	**RL**	**MDL**	**Factor**	**Column**
Aroclor 1016	0	ng/cart	30	-	0	ug/m3	0.0250	-	1	A
Aroclor 1221	0	ng/cart	100	-	0	ug/m3	0.0833	-	1	A
Aroclor 1232	0	ng/cart	30	-	0	ug/m3	0.0250	-	1	A
Aroclor 1242	0	ng/cart	100	-	0	ug/m3	0.0833	-	1	A
Aroclor 1248	402	ng/cart	20	-	0.335	ug/m3	0.0167	-	1	B
Aroclor 1254	0	ng/cart	20	-	0	ug/m3	0.0167	-	1	A
Aroclor 1260	0	ng/cart	20	-	0	ug/m3	0.0167	-	1	A
Aroclor 1262	0	ng/cart	20	-	0	ug/m3	0.0167	-	1	A
Aroclor 1268	0	ng/cart	20	-	0	ug/m3	0.0167	-	1	A

Sample Results

Lab ID:	L1512517-02	Sampling Time:	4.00	hrs
		Sampling Rate:	5	L/min
Matrix:	Air Media	Total Flow:	1200	L

PCB Aroclors in Air

	ng/cart				ug/m3				Dilution	
Parameter	Result	Units	RL	MDL	Result	Units	RL	MDL	Factor	Column
Aroclor 1016	0	ng/cart	30	-	ND	ug/m3	0.0250	-	1	A
Aroclor 1221	0	ng/cart	100	-	ND	ug/m3	0.0833	-	1	A
Aroclor 1232	0	ng/cart	30	-	ND	ug/m3	0.0250	-	1	A
Aroclor 1242	0	ng/cart	20	-	ND	ug/m3	0.0167	-	1	A
Aroclor 1248	0	ng/cart	20	-	ND	ug/m3	0.0167	-	1	A
Aroclor 1254	0	ng/cart	20	-	ND	ug/m3	0.0167	-	1	A
Aroclor 1260	0	ng/cart	20	-	ND	ug/m3	0.0167	-	1	A
Aroclor 1262	0	ng/cart	20	-	ND	ug/m3	0.0167	-	1	A
Aroclor 1268	0	ng/cart	20	-	ND	ug/m3	0.0167	-	1	A

ANALYTICAL REPORT

Lab Number:	L1519637
Client:	TRC Environmental Consultants Wannalancit Mills 650 Suffolk Street Lowell, MA 01854
ATTN:	David Sullivan
Phone:	(978) 656-3565
Project Name:	NBHS IRA
Project Number:	115058
Report Date:	08/20/15

The original project report/data package is held by Alpha Analytical. This report/data package is paginated and should be reproduced only in its entirety. Alpha Analytical holds no responsibility for results and/or data that are not consistent with the original.

Certifications & Approvals: NY (11627), CT (PH-0141), NH (2206), NJ NELAP (MA015), RI (LAO00299), ME (MA00030), PA (68-02089), VA (460194), LA NELAP (03090), FL (E87814), TX (T104704419), WA (C954), USFWS (Permit #LE2069641), USDA (Permit #P330-11-00109), US Army Corps of Engineers.

320 Forbes Boulevard, Mansfield, MA 02048-1806
508-822-9300 (Fax) 508-822-3288 800-624-9220 - www.alphalab.com

Project Name: NBHS IRA
Project Number: 115058

Lab Number: L1519637
Report Date: 08/20/15

Alpha Sample ID	Client ID	Matrix	Sample Location	Collection Date/Time	Receive Date
L1519637-01	VAPOR INLET	SOIL_VAPOR	NEW BEDFORD	08/14/15 08:54	08/14/15
L1519637-02	VAPOR OUTLET	SOIL_VAPOR	NEW BEDFORD	08/14/15 08:57	08/14/15

Project Name: NBHS IRA **Lab Number:** L1519637

Project Number: 115058 **Report Date:** 08/20/15

MADEP MCP Response Action Analytical Report Certification

This form provides certifications for all samples performed by MCP methods. Please refer to the Sample Results and Container Information sections of this report for specification of MCP methods used for each analysis. The following questions pertain only to MCP Analytical Methods.

An affirmative response to questions A through F is required for "Presumptive Certainty" status		
A	Were all samples received in a condition consistent with those described on the Chain-of-Custody, properly preserved (including temperature) in the field or laboratory, and prepared/analyzed within method holding times?	YES
B	Were the analytical method(s) and all associated QC requirements specified in the selected CAM protocol(s) followed?	YES
C	Were all required corrective actions and analytical response actions specified in the selected CAM protocol(s) implemented for all identified performance standard non-conformances?	YES
D	Does the laboratory report comply with all the reporting requirements specified in CAM VII A, "Quality Assurance and Quality Control Guidelines for the Acquisition and Reporting of Analytical Data?"	YES
E a.	VPH, EPH, and APH Methods only: Was each method conducted without significant modification(s)? (Refer to the individual method(s) for a list of significant modifications).	N/A
E b.	APH and TO-15 Methods only: Was the complete analyte list reported for each method?	YES
F	Were all applicable CAM protocol QC and performance standard non-conformances identified and evaluated in a laboratory narrative (including all "No" responses to Questions A through E)?	YES

A response to questions G, H and I is required for "Presumptive Certainty" status		
G	Were the reporting limits at or below all CAM reporting limits specified in the selected CAM protocol(s)?	NO
H	Were all QC performance standards specified in the CAM protocol(s) achieved?	YES
I	Were results reported for the complete analyte list specified in the selected CAM protocol(s)?	YES

For any questions answered "No", please refer to the case narrative section on the following page(s).

Please note that sample matrix information is located in the Sample Results section of this report.

Project Name: NBHS IRA
Project Number: 115058

Lab Number: L1519637
Report Date: 08/20/15

Case Narrative

The samples were received in accordance with the Chain of Custody and no significant deviations were encountered during the preparation or analysis unless otherwise noted. Sample Receipt, Container Information, and the Chain of Custody are located at the back of the report.

Results contained within this report relate only to the samples submitted under this Alpha Lab Number and meet all of the requirements of NELAC, for all NELAC accredited parameters. The data presented in this report is organized by parameter (i.e. VOC, SVOC, etc.). Sample specific Quality Control data (i.e. Surrogate Spike Recovery) is reported at the end of the target analyte list for each individual sample, followed by the Laboratory Batch Quality Control at the end of each parameter. Tentatively Identified Compounds (TICs), if requested, are reported for compounds identified to be present and are not part of the method/program Target Compound List, even if only a subset of the TCL are being reported. If a sample was re-analyzed or re-extracted due to a required quality control corrective action and if both sets of data are reported, the Laboratory ID of the re-analysis or re-extraction is designated with an "R" or "RE", respectively. When multiple Batch Quality Control elements are reported (e.g. more than one LCS), the associated samples for each element are noted in the grey shaded header line of each data table. Any Laboratory Batch, Sample Specific % recovery or RPD value that is outside the listed Acceptance Criteria is bolded in the report. All specific QC information is also incorporated in the Data Usability format of our Data Merger tool where it can be reviewed along with any associated usability implications. Soil/sediments, solids and tissues are reported on a dry weight basis unless otherwise noted. Definitions of all data qualifiers and acronyms used in this report are provided in the Glossary located at the back of the report.

In reference to questions H (CAM) or 4 (RCP) when "NO" is checked, the performance criteria for CAM and RCP methods allow for some quality control failures to occur and still be within method compliance. In these instances the specific failure is not narrated but noted in the associated QC table. The information is also incorporated in the Data Usability format of our Data Merger tool where it can be reviewed along with any associated usability implications.

Please see the associated ADEx data file for a comparison of laboratory reporting limits that were achieved with the regulatory Numerical Standards requested on the Chain of Custody.

HOLD POLICY
For samples submitted on hold, Alpha's policy is to hold samples (with the exception of Air canisters) free of charge for 21 calendar days from the date the project is completed. After 21 calendar days, we will dispose of all samples submitted including those put on hold unless you have contacted your Client Service Representative and made arrangements for Alpha to continue to hold the samples. Air canisters will be disposed after 3 business days from the date the project is completed.

Please contact Client Services at 800-624-9220 with any questions.

Project Name: NBHS IRA **Lab Number:** L1519637
Project Number: 115058 **Report Date:** 08/20/15

Case Narrative (continued)

MCP Related Narratives

Canisters were released from the laboratory on August 13, 2015. The canister certification data is provided as an addendum.

MCP Volatile Organics in Air

In reference to question G:

One or more of the target analytes did not achieve the requested CAM reporting limits.

I, the undersigned, attest under the pains and penalties of perjury that, to the best of my knowledge and belief and based upon my personal inquiry of those responsible for providing the information contained in this analytical report, such information is accurate and complete. This certificate of analysis is not complete unless this page accompanies any and all pages of this report.

Authorized Signature: Christopher J. Anderson

Title: Technical Director/Representative Date: 08/20/15

AIR

Project Name: NBHS IRA
Project Number: 115058

Lab Number: L1519637
Report Date: 08/20/15

SAMPLE RESULTS

Lab ID: L1519637-01
Client ID: VAPOR INLET
Sample Location: NEW BEDFORD
Matrix: Soil_Vapor
Anaytical Method: 101,TO-15
Analytical Date: 08/15/15 22:34
Analyst: RY

Date Collected: 08/14/15 08:54
Date Received: 08/14/15
Field Prep: Not Specified

Parameter	ppbV Results	ppbV RL	ppbV MDL	ug/m3 Results	ug/m3 RL	ug/m3 MDL	Qualifier	Dilution Factor
MCP Volatile Organics in Air - Mansfield Lab								
Vinyl chloride	2.94	0.200	--	7.52	0.511	--		1
Bromomethane	ND	0.200	--	ND	0.777	--		1
Acetone	1.78	1.00	--	4.23	2.38	--		1
1,1-Dichloroethene	ND	0.200	--	ND	0.793	--		1
Methylene chloride	ND	0.500	--	ND	1.74	--		1
trans-1,2-Dichloroethene	0.497	0.200	--	1.97	0.793	--		1
1,1-Dichloroethane	ND	0.200	--	ND	0.809	--		1
Methyl tert butyl ether	ND	0.200	--	ND	0.721	--		1
2-Butanone	ND	0.500	--	ND	1.47	--		1
cis-1,2-Dichloroethene	0.634	0.200	--	2.51	0.793	--		1
Chloroform	0.249	0.200	--	1.22	0.977	--		1
1,2-Dichloroethane	ND	0.200	--	ND	0.809	--		1
1,1,1-Trichloroethane	ND	0.200	--	ND	1.09	--		1
Benzene	ND	0.200	--	ND	0.639	--		1
Carbon tetrachloride	ND	0.200	--	ND	1.26	--		1
1,2-Dichloropropane	ND	0.200	--	ND	0.924	--		1
Bromodichloromethane	ND	0.200	--	ND	1.34	--		1
1,4-Dioxane	ND	0.200	--	ND	0.721	--		1
Trichloroethene	0.681	0.200	--	3.66	1.07	--		1
cis-1,3-Dichloropropene	ND	0.200	--	ND	0.908	--		1
4-Methyl-2-pentanone	ND	0.500	--	ND	2.05	--		1
trans-1,3-Dichloropropene	ND	0.200	--	ND	0.908	--		1
1,1,2-Trichloroethane	ND	0.200	--	ND	1.09	--		1
Toluene	0.552	0.200	--	2.08	0.754	--		1

Project Name: NBHS IRA
Project Number: 115058
Lab Number: L1519637
Report Date: 08/20/15

SAMPLE RESULTS

Lab ID: L1519637-01
Client ID: VAPOR INLET
Sample Location: NEW BEDFORD
Date Collected: 08/14/15 08:54
Date Received: 08/14/15
Field Prep: Not Specified

Parameter	ppbV Results	ppbV RL	ppbV MDL	ug/m3 Results	ug/m3 RL	ug/m3 MDL	Qualifier	Dilution Factor
MCP Volatile Organics in Air - Mansfield Lab								
Dibromochloromethane	ND	0.200	--	ND	1.70	--		1
1,2-Dibromoethane	ND	0.200	--	ND	1.54	--		1
Tetrachloroethene	ND	0.200	--	ND	1.36	--		1
Chlorobenzene	ND	0.200	--	ND	0.921	--		1
Ethylbenzene	ND	0.200	--	ND	0.869	--		1
p/m-Xylene	ND	0.400	--	ND	1.74	--		1
Bromoform	ND	0.200	--	ND	2.07	--		1
Styrene	ND	0.200	--	ND	0.852	--		1
1,1,2,2-Tetrachloroethane	ND	0.200	--	ND	1.37	--		1
o-Xylene	ND	0.200	--	ND	0.869	--		1
1,3-Dichlorobenzene	ND	0.200	--	ND	1.20	--		1
1,4-Dichlorobenzene	ND	0.200	--	ND	1.20	--		1
1,2-Dichlorobenzene	ND	0.200	--	ND	1.20	--		1
1,2,4-Trichlorobenzene	ND	0.200	--	ND	1.48	--		1
Naphthalene	ND	0.200	--	ND	1.05	--		1
Hexachlorobutadiene	ND	0.200	--	ND	2.13	--		1

Internal Standard	% Recovery	Qualifier	Acceptance Criteria
1,4-Difluorobenzene	86		60-140
Bromochloromethane	85		60-140
chlorobenzene-d5	78		60-140

Project Name: NBHS IRA
Project Number: 115058

Lab Number: L1519637
Report Date: 08/20/15

SAMPLE RESULTS

Lab ID: L1519637-02
Client ID: VAPOR OUTLET
Sample Location: NEW BEDFORD
Matrix: Soil_Vapor
Anaytical Method: 101,TO15-SIM
Analytical Date: 08/15/15 21:25
Analyst: RY

Date Collected: 08/14/15 08:57
Date Received: 08/14/15
Field Prep: Not Specified

Parameter	ppbV Results	ppbV RL	ppbV MDL	ug/m3 Results	ug/m3 RL	ug/m3 MDL	Qualifier	Dilution Factor
MCP Volatile Organics in Air by SIM - Mansfield Lab								
Vinyl chloride	0.078	0.020	--	0.199	0.051	--		1
Bromomethane	ND	0.020	--	ND	0.078	--		1
Acetone	ND	1.00	--	ND	2.38	--		1
1,1-Dichloroethene	ND	0.020	--	ND	0.079	--		1
Methylene chloride	ND	1.40	--	ND	1.74	--		1
trans-1,2-Dichloroethene	1.43	0.020	--	5.67	0.079	--		1
1,1-Dichloroethane	ND	0.020	--	ND	0.081	--		1
Methyl tert butyl ether	ND	0.200	--	ND	0.721	--		1
2-Butanone	ND	0.500	--	ND	1.47	--		1
cis-1,2-Dichloroethene	3.04	0.020	--	12.1	0.079	--		1
Chloroform	0.226	0.020	--	1.10	0.098	--		1
1,2-Dichloroethane	ND	0.020	--	ND	0.081	--		1
1,1,1-Trichloroethane	ND	0.020	--	ND	0.109	--		1
Benzene	ND	0.100	--	ND	0.319	--		1
Carbon tetrachloride	ND	0.020	--	ND	0.126	--		1
1,2-Dichloropropane	ND	0.020	--	ND	0.092	--		1
Bromodichloromethane	ND	0.020	--	ND	0.134	--		1
1,4-Dioxane	ND	0.100	--	ND	0.360	--		1
Trichloroethene	ND	0.020	--	ND	0.107	--		1
cis-1,3-Dichloropropene	ND	0.020	--	ND	0.091	--		1
4-Methyl-2-pentanone	ND	0.500	--	ND	2.05	--		1
trans-1,3-Dichloropropene	ND	0.020	--	ND	0.091	--		1
1,1,2-Trichloroethane	ND	0.020	--	ND	0.109	--		1
Toluene	0.134	0.050	--	0.505	0.188	--		1

Project Name: NBHS IRA
Project Number: 115058
Lab Number: L1519637
Report Date: 08/20/15

SAMPLE RESULTS

Lab ID: L1519637-02
Client ID: VAPOR OUTLET
Sample Location: NEW BEDFORD
Date Collected: 08/14/15 08:57
Date Received: 08/14/15
Field Prep: Not Specified

Parameter	ppbV Results	ppbV RL	ppbV MDL	ug/m3 Results	ug/m3 RL	ug/m3 MDL	Qualifier	Dilution Factor
MCP Volatile Organics in Air by SIM - Mansfield Lab								
Dibromochloromethane	ND	0.020	--	ND	0.170	--		1
1,2-Dibromoethane	ND	0.020	--	ND	0.154	--		1
Tetrachloroethene	ND	0.020	--	ND	0.136	--		1
Chlorobenzene	ND	0.020	--	ND	0.092	--		1
Ethylbenzene	ND	0.020	--	ND	0.087	--		1
p/m-Xylene	0.064	0.040	--	0.278	0.174	--		1
Bromoform	ND	0.020	--	ND	0.207	--		1
Styrene	ND	0.020	--	ND	0.085	--		1
1,1,2,2-Tetrachloroethane	ND	0.020	--	ND	0.137	--		1
o-Xylene	0.023	0.020	--	0.10	0.087	--		1
1,3-Dichlorobenzene	ND	0.020	--	ND	0.120	--		1
1,4-Dichlorobenzene	ND	0.020	--	ND	0.120	--		1
1,2-Dichlorobenzene	ND	0.020	--	ND	0.120	--		1
1,2,4-Trichlorobenzene	ND	0.050	--	ND	0.371	--		1
Naphthalene	0.060	0.050	--	0.315	0.262	--		1
Hexachlorobutadiene	ND	0.050	--	ND	0.533	--		1

Internal Standard	% Recovery	Qualifier	Acceptance Criteria
1,4-difluorobenzene	89		60-140
bromochloromethane	90		60-140
chlorobenzene-d5	86		60-140

Project Name: NBHS IRA
Project Number: 115058

Lab Number: L1519637
Report Date: 08/20/15

Method Blank Analysis
Batch Quality Control

Analytical Method: 101,TO-15
Analytical Date: 08/15/15 14:50

Parameter	ppbV Results	ppbV RL	ppbV MDL	ug/m3 Results	ug/m3 RL	ug/m3 MDL	Qualifier	Dilution Factor
MCP Volatile Organics in Air - Mansfield Lab for sample(s): 01 Batch: WG812539-4								
Chlorodifluoromethane	ND	0.200	--	ND	0.707	--		1
Propylene	ND	0.500	--	ND	0.861	--		1
Propane	ND	0.500	--	ND	0.902	--		1
Dichlorodifluoromethane	ND	0.200	--	ND	0.989	--		1
Chloromethane	ND	0.200	--	ND	0.413	--		1
1,2-Dichloro-1,1,2,2-tetrafluoroethane	ND	0.200	--	ND	1.40	--		1
Methanol	ND	5.00	--	ND	6.55	--		1
Vinyl chloride	ND	0.200	--	ND	0.511	--		1
1,3-Butadiene	ND	0.200	--	ND	0.442	--		1
Butane	ND	0.200	--	ND	0.475	--		1
Bromomethane	ND	0.200	--	ND	0.777	--		1
Chloroethane	ND	0.200	--	ND	0.528	--		1
Ethyl Alcohol	ND	2.50	--	ND	4.71	--		1
Dichlorofluoromethane	ND	0.200	--	ND	0.842	--		1
Vinyl bromide	ND	0.200	--	ND	0.874	--		1
Acrolein	ND	0.500	--	ND	1.15	--		1
Acetone	ND	1.00	--	ND	2.38	--		1
Acetonitrile	ND	0.200	--	ND	0.336	--		1
Trichlorofluoromethane	ND	0.200	--	ND	1.12	--		1
iso-Propyl Alcohol	ND	0.500	--	ND	1.23	--		1
Acrylonitrile	ND	0.500	--	ND	1.09	--		1
Pentane	ND	0.200	--	ND	0.590	--		1
Ethyl ether	ND	0.200	--	ND	0.606	--		1
1,1-Dichloroethene	ND	0.200	--	ND	0.793	--		1
tert-Butyl Alcohol	ND	0.500	--	ND	1.52	--		1

Project Name: NBHS IRA
Project Number: 115058

Lab Number: L1519637
Report Date: 08/20/15

Method Blank Analysis
Batch Quality Control

Analytical Method: 101,TO-15
Analytical Date: 08/15/15 14:50

Parameter	ppbV Results	ppbV RL	ppbV MDL	ug/m3 Results	ug/m3 RL	ug/m3 MDL	Qualifier	Dilution Factor
MCP Volatile Organics in Air - Mansfield Lab for sample(s): 01 Batch: WG812539-4								
Methylene chloride	ND	0.500	--	ND	1.74	--		1
3-Chloropropene	ND	0.200	--	ND	0.626	--		1
Carbon disulfide	ND	0.200	--	ND	0.623	--		1
1,1,2-Trichloro-1,2,2-Trifluoroethane	ND	0.200	--	ND	1.53	--		1
trans-1,2-Dichloroethene	ND	0.200	--	ND	0.793	--		1
1,1-Dichloroethane	ND	0.200	--	ND	0.809	--		1
Methyl tert butyl ether	ND	0.200	--	ND	0.721	--		1
Vinyl acetate	ND	1.00	--	ND	3.52	--		1
2-Butanone	ND	0.500	--	ND	1.47	--		1
cis-1,2-Dichloroethene	ND	0.200	--	ND	0.793	--		1
Ethyl Acetate	ND	0.500	--	ND	1.80	--		1
Chloroform	ND	0.200	--	ND	0.977	--		1
Tetrahydrofuran	ND	0.500	--	ND	1.47	--		1
2,2-Dichloropropane	ND	0.200	--	ND	0.924	--		1
1,2-Dichloroethane	ND	0.200	--	ND	0.809	--		1
n-Hexane	ND	0.200	--	ND	0.705	--		1
Isopropyl Ether	ND	0.200	--	ND	0.836	--		1
Ethyl-Tert-Butyl-Ether	ND	0.200	--	ND	0.836	--		1
1,1,1-Trichloroethane	ND	0.200	--	ND	1.09	--		1
1,1-Dichloropropene	ND	0.200	--	ND	0.908	--		1
Benzene	ND	0.200	--	ND	0.639	--		1
Carbon tetrachloride	ND	0.200	--	ND	1.26	--		1
Cyclohexane	ND	0.200	--	ND	0.688	--		1
Tertiary-Amyl Methyl Ether	ND	0.200	--	ND	0.836	--		1
Dibromomethane	ND	0.200	--	ND	1.42	--		1

Project Name: NBHS IRA
Project Number: 115058

Lab Number: L1519637
Report Date: 08/20/15

Method Blank Analysis
Batch Quality Control

Analytical Method: 101,TO-15
Analytical Date: 08/15/15 14:50

Parameter	ppbV Results	ppbV RL	ppbV MDL	ug/m3 Results	ug/m3 RL	ug/m3 MDL	Qualifier	Dilution Factor
MCP Volatile Organics in Air - Mansfield Lab for sample(s): 01 Batch: WG812539-4								
1,2-Dichloropropane	ND	0.200	--	ND	0.924	--		1
Bromodichloromethane	ND	0.200	--	ND	1.34	--		1
1,4-Dioxane	ND	0.200	--	ND	0.721	--		1
Trichloroethene	ND	0.200	--	ND	1.07	--		1
2,2,4-Trimethylpentane	ND	0.200	--	ND	0.934	--		1
Methyl Methacrylate	ND	0.500	--	ND	2.05	--		1
Heptane	ND	0.200	--	ND	0.820	--		1
cis-1,3-Dichloropropene	ND	0.200	--	ND	0.908	--		1
4-Methyl-2-pentanone	ND	0.500	--	ND	2.05	--		1
trans-1,3-Dichloropropene	ND	0.200	--	ND	0.908	--		1
1,1,2-Trichloroethane	ND	0.200	--	ND	1.09	--		1
Toluene	ND	0.200	--	ND	0.754	--		1
1,3-Dichloropropane	ND	0.200	--	ND	0.924	--		1
2-Hexanone	ND	0.200	--	ND	0.820	--		1
Dibromochloromethane	ND	0.200	--	ND	1.70	--		1
1,2-Dibromoethane	ND	0.200	--	ND	1.54	--		1
Butyl Acetate	ND	0.500	--	ND	2.38	--		1
Octane	ND	0.200	--	ND	0.934	--		1
Tetrachloroethene	ND	0.200	--	ND	1.36	--		1
1,1,1,2-Tetrachloroethane	ND	0.200	--	ND	1.37	--		1
Chlorobenzene	ND	0.200	--	ND	0.921	--		1
Ethylbenzene	ND	0.200	--	ND	0.869	--		1
p/m-Xylene	ND	0.400	--	ND	1.74	--		1
Bromoform	ND	0.200	--	ND	2.07	--		1
Styrene	ND	0.200	--	ND	0.852	--		1

Project Name: NBHS IRA
Project Number: 115058

Lab Number: L1519637
Report Date: 08/20/15

Method Blank Analysis
Batch Quality Control

Analytical Method: 101,TO-15
Analytical Date: 08/15/15 14:50

Parameter	ppbV Results	ppbV RL	ppbV MDL	ug/m3 Results	ug/m3 RL	ug/m3 MDL	Qualifier	Dilution Factor
MCP Volatile Organics in Air - Mansfield Lab for sample(s): 01 Batch: WG812539-4								
1,1,2,2-Tetrachloroethane	ND	0.200	--	ND	1.37	--		1
o-Xylene	ND	0.200	--	ND	0.869	--		1
1,2,3-Trichloropropane	ND	0.200	--	ND	1.21	--		1
Nonane (C9)	ND	0.200	--	ND	1.05	--		1
Isopropylbenzene	ND	0.200	--	ND	0.983	--		1
Bromobenzene	ND	0.200	--	ND	0.793	--		1
o-Chlorotoluene	ND	0.200	--	ND	1.04	--		1
n-Propylbenzene	ND	0.200	--	ND	0.983	--		1
p-Chlorotoluene	ND	0.200	--	ND	1.04	--		1
4-Ethyltoluene	ND	0.200	--	ND	0.983	--		1
1,3,5-Trimethylbenzene	ND	0.200	--	ND	0.983	--		1
tert-Butylbenzene	ND	0.200	--	ND	1.10	--		1
1,2,4-Trimethylbenzene	ND	0.200	--	ND	0.983	--		1
Decane (C10)	ND	0.200	--	ND	1.16	--		1
Benzyl chloride	ND	0.200	--	ND	1.04	--		1
1,3-Dichlorobenzene	ND	0.200	--	ND	1.20	--		1
1,4-Dichlorobenzene	ND	0.200	--	ND	1.20	--		1
sec-Butylbenzene	ND	0.200	--	ND	1.10	--		1
p-Isopropyltoluene	ND	0.200	--	ND	1.10	--		1
1,2-Dichlorobenzene	ND	0.200	--	ND	1.20	--		1
n-Butylbenzene	ND	0.200	--	ND	1.10	--		1
1,2-Dibromo-3-chloropropane	ND	0.200	--	ND	1.93	--		1
Undecane	ND	0.200	--	ND	1.28	--		1
Dodecane (C12)	ND	0.200	--	ND	1.39	--		1
1,2,4-Trichlorobenzene	ND	0.200	--	ND	1.48	--		1

Project Name: NBHS IRA
Project Number: 115058

Lab Number: L1519637
Report Date: 08/20/15

Method Blank Analysis
Batch Quality Control

Analytical Method: 101,TO-15
Analytical Date: 08/15/15 14:50

Parameter	ppbV Results	ppbV RL	ppbV MDL	ug/m3 Results	ug/m3 RL	ug/m3 MDL	Qualifier	Dilution Factor
MCP Volatile Organics in Air - Mansfield Lab for sample(s): 01 Batch: WG812539-4								
Naphthalene	ND	0.200	--	ND	1.05	--		1
1,2,3-Trichlorobenzene	ND	0.200	--	ND	1.48	--		1
Hexachlorobutadiene	ND	0.200	--	ND	2.13	--		1

Project Name: NBHS IRA
Project Number: 115058

Lab Number: L1519637
Report Date: 08/20/15

Method Blank Analysis
Batch Quality Control

Analytical Method: 101,TO15-SIM
Analytical Date: 08/15/15 14:50

Parameter	ppbV Results	ppbV RL	ppbV MDL	ug/m3 Results	ug/m3 RL	ug/m3 MDL	Qualifier	Dilution Factor
MCP Volatile Organics in Air by SIM - Mansfield Lab for sample(s): 02 Batch: WG812540-4								
Propylene	ND	0.500	--	ND	0.861	--		1
Dichlorodifluoromethane	ND	0.200	--	ND	0.989	--		1
Chloromethane	ND	0.200	--	ND	0.413	--		1
1,2-Dichloro-1,1,2,2-tetrafluoroethane	ND	0.050	--	ND	0.349	--		1
Vinyl chloride	ND	0.020	--	ND	0.051	--		1
1,3-Butadiene	ND	0.020	--	ND	0.044	--		1
Bromomethane	ND	0.020	--	ND	0.078	--		1
Chloroethane	ND	0.020	--	ND	0.053	--		1
Ethyl Alcohol	ND	2.50	--	ND	4.71	--		1
Vinyl bromide	ND	0.200	--	ND	0.874	--		1
Acetone	ND	1.00	--	ND	2.38	--		1
Trichlorofluoromethane	ND	0.050	--	ND	0.281	--		1
iso-Propyl Alcohol	ND	0.500	--	ND	1.23	--		1
Acrylonitrile	ND	0.500	--	ND	1.09	--		1
1,1-Dichloroethene	ND	0.020	--	ND	0.079	--		1
Methylene chloride	ND	0.500	--	ND	1.74	--		1
3-Chloropropene	ND	0.200	--	ND	0.626	--		1
Carbon disulfide	ND	0.200	--	ND	0.623	--		1
1,1,2-Trichloro-1,2,2-Trifluoroethane	ND	0.050	--	ND	0.383	--		1
Halothane	ND	0.050	--	ND	0.404	--		1
trans-1,2-Dichloroethene	ND	0.020	--	ND	0.079	--		1
1,1-Dichloroethane	ND	0.020	--	ND	0.081	--		1
Methyl tert butyl ether	ND	0.200	--	ND	0.721	--		1
Vinyl acetate	ND	0.200	--	ND	0.704	--		1
2-Butanone	ND	0.500	--	ND	1.47	--		1

Project Name: NBHS IRA
Project Number: 115058

Lab Number: L1519637
Report Date: 08/20/15

Method Blank Analysis
Batch Quality Control

Analytical Method: 101,TO15-SIM
Analytical Date: 08/15/15 14:50

Parameter	ppbV Results	ppbV RL	ppbV MDL	ug/m3 Results	ug/m3 RL	ug/m3 MDL	Qualifier	Dilution Factor
MCP Volatile Organics in Air by SIM - Mansfield Lab for sample(s): 02 Batch: WG812540-4								
cis-1,2-Dichloroethene	ND	0.020	--	ND	0.079	--		1
Ethyl Acetate	ND	0.500	--	ND	1.80	--		1
Chloroform	ND	0.020	--	ND	0.098	--		1
Tetrahydrofuran	ND	0.200	--	ND	0.590	--		1
1,2-Dichloroethane	ND	0.020	--	ND	0.081	--		1
n-Hexane	ND	0.200	--	ND	0.705	--		1
1,1,1-Trichloroethane	ND	0.020	--	ND	0.109	--		1
Benzene	ND	0.100	--	ND	0.319	--		1
Carbon tetrachloride	ND	0.020	--	ND	0.126	--		1
Cyclohexane	ND	0.200	--	ND	0.688	--		1
1,2-Dichloropropane	ND	0.020	--	ND	0.092	--		1
Bromodichloromethane	ND	0.020	--	ND	0.134	--		1
1,4-Dioxane	ND	0.100	--	ND	0.360	--		1
Trichloroethene	ND	0.020	--	ND	0.107	--		1
2,2,4-Trimethylpentane	ND	0.200	--	ND	0.934	--		1
Heptane	ND	0.200	--	ND	0.820	--		1
cis-1,3-Dichloropropene	ND	0.020	--	ND	0.091	--		1
4-Methyl-2-pentanone	ND	0.500	--	ND	2.05	--		1
trans-1,3-Dichloropropene	ND	0.020	--	ND	0.091	--		1
1,1,2-Trichloroethane	ND	0.020	--	ND	0.109	--		1
Toluene	ND	0.050	--	ND	0.188	--		1
2-Hexanone	ND	0.200	--	ND	0.820	--		1
Dibromochloromethane	ND	0.020	--	ND	0.170	--		1
1,2-Dibromoethane	ND	0.020	--	ND	0.154	--		1
Tetrachloroethene	ND	0.020	--	ND	0.136	--		1

Project Name: NBHS IRA
Project Number: 115058

Lab Number: L1519637
Report Date: 08/20/15

Method Blank Analysis
Batch Quality Control

Analytical Method: 101,TO15-SIM
Analytical Date: 08/15/15 14:50

Parameter	ppbV Results	ppbV RL	ppbV MDL	ug/m3 Results	ug/m3 RL	ug/m3 MDL	Qualifier	Dilution Factor
MCP Volatile Organics in Air by SIM - Mansfield Lab for sample(s): 02 Batch: WG812540-4								
1,1,1,2-Tetrachloroethane	ND	0.020	--	ND	0.137	--		1
Chlorobenzene	ND	0.020	--	ND	0.092	--		1
Ethylbenzene	ND	0.020	--	ND	0.087	--		1
p/m-Xylene	ND	0.040	--	ND	0.174	--		1
Bromoform	ND	0.020	--	ND	0.207	--		1
Styrene	ND	0.020	--	ND	0.085	--		1
1,1,2,2-Tetrachloroethane	ND	0.020	--	ND	0.137	--		1
o-Xylene	ND	0.020	--	ND	0.087	--		1
Isopropylbenzene	ND	0.200	--	ND	0.983	--		1
1,3,5-Trimethylbenzene	ND	0.020	--	ND	0.098	--		1
1,2,4-Trimethylbenzene	ND	0.020	--	ND	0.098	--		1
Benzyl chloride	ND	0.200	--	ND	1.04	--		1
1,3-Dichlorobenzene	ND	0.020	--	ND	0.120	--		1
1,4-Dichlorobenzene	ND	0.020	--	ND	0.120	--		1
sec-Butylbenzene	ND	0.200	--	ND	1.10	--		1
p-Isopropyltoluene	ND	0.200	--	ND	1.10	--		1
1,2-Dichlorobenzene	ND	0.020	--	ND	0.120	--		1
n-Butylbenzene	ND	0.200	--	ND	1.10	--		1
1,2,4-Trichlorobenzene	ND	0.050	--	ND	0.371	--		1
Naphthalene	ND	0.050	--	ND	0.262	--		1
1,2,3-Trichlorobenzene	ND	0.050	--	ND	0.371	--		1
Hexachlorobutadiene	ND	0.050	--	ND	0.533	--		1

Lab Control Sample Analysis
Batch Quality Control

Project Name: NBHS IRA
Project Number: 115058

Lab Number: L1519637
Report Date: 08/20/15

Parameter	LCS %Recovery	Qual	LCSD %Recovery	Qual	%Recovery Limits	RPD	Qual	RPD Limits
MCP Volatile Organics in Air - Mansfield Lab Associated sample(s): 01 Batch: WG812539-3								
Chlorodifluoromethane	88		-		70-130	-		
Propylene	100		-		70-130	-		
Dichlorodifluoromethane	81		-		70-130	-		
Chloromethane	97		-		70-130	-		
1,2-Dichloro-1,1,2,2-tetrafluoroethane	101		-		70-130	-		
Methanol	99		-		70-130	-		
Vinyl chloride	98		-		70-130	-		
1,3-Butadiene	100		-		70-130	-		
Bromomethane	97		-		70-130	-		
Chloroethane	96		-		70-130	-		
Ethyl Alcohol	105		-		70-130	-		
Dichlorofluoromethane	92		-		70-130	-		
Vinyl bromide	101		-		70-130	-		
Acrolein	95		-		70-130	-		
Acetone	109		-		50-150	-		
Acetonitrile	99		-		70-130	-		
Trichlorofluoromethane	104		-		70-130	-		
iso-Propyl Alcohol	102		-		70-130	-		
Acrylonitrile	93		-		70-130	-		
Pentane	94		-		70-130	-		
Ethyl ether	98		-		70-130	-		

Lab Control Sample Analysis
Batch Quality Control

Project Name: NBHS IRA
Project Number: 115058

Lab Number: L1519637
Report Date: 08/20/15

Parameter	LCS %Recovery	Qual	LCSD %Recovery	Qual	%Recovery Limits	RPD	Qual	RPD Limits
MCP Volatile Organics in Air - Mansfield Lab Associated sample(s): 01 Batch: WG812539-3								
1,1-Dichloroethene	93		-		70-130	-		
tert-Butyl Alcohol	89		-		70-130	-		
Methylene chloride	93		-		70-130	-		
3-Chloropropene	101		-		70-130	-		
Carbon disulfide	89		-		70-130	-		
1,1,2-Trichloro-1,2,2-Trifluoroethane	94		-		70-130	-		
trans-1,2-Dichloroethene	85		-		70-130	-		
1,1-Dichloroethane	94		-		70-130	-		
Methyl tert butyl ether	89		-		70-130	-		
Vinyl acetate	117		-		70-130	-		
2-Butanone	97		-		70-130	-		
cis-1,2-Dichloroethene	102		-		70-130	-		
Ethyl Acetate	93		-		70-130	-		
Chloroform	94		-		70-130	-		
Tetrahydrofuran	89		-		70-130	-		
2,2-Dichloropropane	83		-		70-130	-		
1,2-Dichloroethane	94		-		70-130	-		
n-Hexane	99		-		70-130	-		
Isopropyl Ether	93		-		70-130	-		
Ethyl-Tert-Butyl-Ether	94		-		70-130	-		
1,1,1-Trichloroethane	99		-		70-130	-		

Lab Control Sample Analysis
Batch Quality Control

Project Name: NBHS IRA
Project Number: 115058

Lab Number: L1519637
Report Date: 08/20/15

Parameter	LCS %Recovery	Qual	LCSD %Recovery	Qual	%Recovery Limits	RPD	Qual	RPD Limits
MCP Volatile Organics in Air - Mansfield Lab Associated sample(s): 01 Batch: WG812539-3								
1,1-Dichloropropene	100		-		70-130	-		
Benzene	97		-		70-130	-		
Carbon tetrachloride	97		-		70-130	-		
Cyclohexane	95		-		70-130	-		
Tertiary-Amyl Methyl Ether	92		-		70-130	-		
Dibromomethane	96		-		70-130	-		
1,2-Dichloropropane	100		-		70-130	-		
Bromodichloromethane	99		-		70-130	-		
1,4-Dioxane	99		-		50-150	-		
Trichloroethene	101		-		70-130	-		
2,2,4-Trimethylpentane	99		-		70-130	-		
Methyl Methacrylate[1]	95		-		70-130	-		
Heptane	101		-		70-130	-		
cis-1,3-Dichloropropene	103		-		70-130	-		
4-Methyl-2-pentanone	104		-		70-130	-		
trans-1,3-Dichloropropene	90		-		70-130	-		
1,1,2-Trichloroethane	103		-		70-130	-		
Toluene	94		-		70-130	-		
1,3-Dichloropropane	90		-		70-130	-		
2-Hexanone	100		-		70-130	-		
Dibromochloromethane	94		-		70-130	-		

Lab Control Sample Analysis
Batch Quality Control

Project Name: NBHS IRA
Project Number: 115058

Lab Number: L1519637
Report Date: 08/20/15

Parameter	LCS %Recovery	Qual	LCSD %Recovery	Qual	%Recovery Limits	RPD	Qual	RPD Limits
MCP Volatile Organics in Air - Mansfield Lab Associated sample(s): 01 Batch: WG812539-3								
1,2-Dibromoethane	96		-		70-130	-		
Octane	87		-		70-130	-		
Tetrachloroethene	94		-		70-130	-		
1,1,1,2-Tetrachloroethane	89		-		70-130	-		
Chlorobenzene	97		-		70-130	-		
Ethylbenzene	95		-		70-130	-		
p/m-Xylene	96		-		70-130	-		
Bromoform	94		-		70-130	-		
Styrene	96		-		70-130	-		
1,1,2,2-Tetrachloroethane	104		-		70-130	-		
o-Xylene	103		-		70-130	-		
1,2,3-Trichloropropane	93		-		70-130	-		
Nonane (C9)	95		-		70-130	-		
Isopropylbenzene	96		-		70-130	-		
Bromobenzene	94		-		70-130	-		
o-Chlorotoluene	95		-		70-130	-		
n-Propylbenzene	96		-		70-130	-		
p-Chlorotoluene	94		-		70-130	-		
4-Ethyltoluene	97		-		70-130	-		
1,3,5-Trimethylbenzene	97		-		70-130	-		
tert-Butylbenzene	100		-		70-130	-		

Lab Control Sample Analysis
Batch Quality Control

Project Name: NBHS IRA
Project Number: 115058

Lab Number: L1519637
Report Date: 08/20/15

Parameter	LCS %Recovery	Qual	LCSD %Recovery	Qual	%Recovery Limits	RPD	Qual	RPD Limits
MCP Volatile Organics in Air - Mansfield Lab Associated sample(s): 01 Batch: WG812539-3								
1,2,4-Trimethylbenzene	107		-		70-130	-		
Decane (C10)	94		-		70-130	-		
Benzyl chloride	98		-		70-130	-		
1,3-Dichlorobenzene	104		-		70-130	-		
1,4-Dichlorobenzene	100		-		70-130	-		
sec-Butylbenzene	97		-		70-130	-		
p-Isopropyltoluene	88		-		70-130	-		
1,2-Dichlorobenzene	103		-		70-130	-		
n-Butylbenzene	100		-		70-130	-		
1,2-Dibromo-3-chloropropane	97		-		70-130	-		
Undecane	97		-		70-130	-		
Dodecane (C12)	118		-		70-130	-		
1,2,4-Trichlorobenzene	114		-		50-150	-		
Naphthalene	108		-		50-150	-		
1,2,3-Trichlorobenzene	104		-		70-130	-		
Hexachlorobutadiene	106		-		50-150	-		

Lab Control Sample Analysis
Batch Quality Control

Project Name: NBHS IRA
Project Number: 115058

Lab Number: L1519637
Report Date: 08/20/15

Parameter	LCS %Recovery	Qual	LCSD %Recovery	Qual	%Recovery Limits	RPD	Qual	RPD Limits
MCP Volatile Organics in Air by SIM - Mansfield Lab Associated sample(s): 02 Batch: WG812540-3								
Propylene	99		-		70-130	-		
Dichlorodifluoromethane	114		-		70-130	-		
Chloromethane	94		-		70-130	-		
1,2-Dichloro-1,1,2,2-tetrafluoroethane	97		-		70-130	-		
Vinyl chloride	95		-		70-130	-		
1,3-Butadiene	103		-		70-130	-		
Bromomethane	95		-		70-130	-		
Chloroethane	90		-		70-130	-		
Ethyl Alcohol	100		-		70-130	-		
Vinyl bromide	96		-		70-130	-		
Acetone	106		-		50-150	-		
Trichlorofluoromethane	103		-		70-130	-		
iso-Propyl Alcohol	108		-		70-130	-		
1,1-Dichloroethene	92		-		70-130	-		
Methylene chloride	95		-		70-130	-		
3-Chloropropene	86		-		70-130	-		
Carbon disulfide	85		-		70-130	-		
1,1,2-Trichloro-1,2,2-Trifluoroethane	92		-		70-130	-		
Halothane	102		-		70-130	-		
trans-1,2-Dichloroethene	84		-		70-130	-		
1,1-Dichloroethane	92		-		70-130	-		

Lab Control Sample Analysis
Batch Quality Control

Project Name: NBHS IRA
Project Number: 115058

Lab Number: L1519637
Report Date: 08/20/15

Parameter	LCS %Recovery	Qual	LCSD %Recovery	Qual	%Recovery Limits	RPD	Qual	RPD Limits
MCP Volatile Organics in Air by SIM - Mansfield Lab Associated sample(s): 02 Batch: WG812540-3								
Methyl tert butyl ether	90		-		70-130	-		
Vinyl acetate	102		-		70-130	-		
2-Butanone	96		-		70-130	-		
cis-1,2-Dichloroethene	101		-		70-130	-		
Ethyl Acetate	90		-		70-130	-		
Chloroform	93		-		70-130	-		
Tetrahydrofuran	91		-		70-130	-		
1,2-Dichloroethane	92		-		70-130	-		
n-Hexane	96		-		70-130	-		
1,1,1-Trichloroethane	93		-		70-130	-		
Benzene	92		-		70-130	-		
Carbon tetrachloride	93		-		70-130	-		
Cyclohexane	96		-		70-130	-		
1,2-Dichloropropane	94		-		70-130	-		
Bromodichloromethane	96		-		70-130	-		
1,4-Dioxane	92		-		50-150	-		
Trichloroethene	92		-		70-130	-		
2,2,4-Trimethylpentane	99		-		70-130	-		
cis-1,3-Dichloropropene	98		-		70-130	-		
4-Methyl-2-pentanone	100		-		70-130	-		
trans-1,3-Dichloropropene	83		-		70-130	-		

Lab Control Sample Analysis
Batch Quality Control

Project Name: NBHS IRA
Project Number: 115058

Lab Number: L1519637
Report Date: 08/20/15

Parameter	LCS %Recovery	Qual	LCSD %Recovery	Qual	%Recovery Limits	RPD	Qual	RPD Limits
MCP Volatile Organics in Air by SIM - Mansfield Lab Associated sample(s): 02 Batch: WG812540-3								
1,1,2-Trichloroethane	97		-		70-130	-		
Toluene	91		-		70-130	-		
2-Hexanone	98		-		70-130	-		
Dibromochloromethane	89		-		70-130	-		
1,2-Dibromoethane	94		-		70-130	-		
Tetrachloroethene	90		-		70-130	-		
Chlorobenzene	95		-		70-130	-		
Ethylbenzene	93		-		70-130	-		
p/m-Xylene	95		-		70-130	-		
Bromoform	90		-		70-130	-		
Styrene	95		-		70-130	-		
1,1,2,2-Tetrachloroethane	99		-		70-130	-		
o-Xylene	96		-		70-130	-		
1,3,5-Trimethylbenzene	94		-		70-130	-		
1,2,4-Trimethylbenzene	103		-		70-130	-		
Benzyl chloride	92		-		70-130	-		
1,3-Dichlorobenzene	108		-		70-130	-		
1,4-Dichlorobenzene	95		-		70-130	-		
1,2-Dichlorobenzene	101		-		70-130	-		
1,2,4-Trichlorobenzene	112		-		50-150	-		
Naphthalene	113		-		50-150	-		

Lab Control Sample Analysis
Batch Quality Control

Project Name: NBHS IRA
Project Number: 115058

Lab Number: L1519637
Report Date: 08/20/15

Parameter	LCS %Recovery	Qual	LCSD %Recovery	Qual	%Recovery Limits	RPD	Qual	RPD Limits
MCP Volatile Organics in Air by SIM - Mansfield Lab Associated sample(s): 02 Batch: WG812540-3								
1,2,3-Trichlorobenzene	107		-		70-130	-		
Hexachlorobutadiene	100		-		50-150	-		

Lab Duplicate Analysis
Batch Quality Control

Project Name: NBHS IRA
Project Number: 115058

Lab Number: L1519637
Report Date: 08/20/15

Parameter	Native Sample	Duplicate Sample	Units	RPD	Qual	RPD Limits
MCP Volatile Organics in Air by SIM - Mansfield Lab Associated sample(s): 02 QC Batch ID: WG812540-5 QC Sample: L1519637-02 Client ID: VAPOR OUTLET						
Vinyl chloride	0.078	0.081	ppbV	4		25
Bromomethane	ND	ND	ppbV	NC		25
Acetone	ND	ND	ppbV	NC		25
1,1-Dichloroethene	ND	ND	ppbV	NC		25
Methylene chloride	ND	ND	ppbV	NC		25
trans-1,2-Dichloroethene	1.43	1.46	ppbV	2		25
1,1-Dichloroethane	ND	ND	ppbV	NC		25
Methyl tert butyl ether	ND	ND	ppbV	NC		25
2-Butanone	ND	ND	ppbV	NC		25
cis-1,2-Dichloroethene	3.04	3.08	ppbV	1		25
Chloroform	0.226	0.229	ppbV	1		25
1,2-Dichloroethane	ND	ND	ppbV	NC		25
1,1,1-Trichloroethane	ND	ND	ppbV	NC		25
Benzene	ND	ND	ppbV	NC		25
Carbon tetrachloride	ND	ND	ppbV	NC		25
1,2-Dichloropropane	ND	ND	ppbV	NC		25
Bromodichloromethane	ND	ND	ppbV	NC		25
1,4-Dioxane	ND	ND	ppbV	NC		25
Trichloroethene	ND	ND	ppbV	NC		25

Lab Duplicate Analysis
Batch Quality Control

Project Name: NBHS IRA
Project Number: 115058

Lab Number: L1519637
Report Date: 08/20/15

Parameter	Native Sample	Duplicate Sample	Units	RPD	RPD Limits
MCP Volatile Organics in Air by SIM - Mansfield Lab Associated sample(s): 02 QC Batch ID: WG812540-5 QC Sample: L1519637-02 Client ID: VAPOR OUTLET					
cis-1,3-Dichloropropene	ND	ND	ppbV	NC	25
4-Methyl-2-pentanone	ND	ND	ppbV	NC	25
trans-1,3-Dichloropropene	ND	ND	ppbV	NC	25
1,1,2-Trichloroethane	ND	ND	ppbV	NC	25
Toluene	0.134	0.133	ppbV	1	25
Dibromochloromethane	ND	ND	ppbV	NC	25
1,2-Dibromoethane	ND	ND	ppbV	NC	25
Tetrachloroethene	ND	ND	ppbV	NC	25
Chlorobenzene	ND	ND	ppbV	NC	25
Ethylbenzene	ND	ND	ppbV	NC	25
p/m-Xylene	0.064	0.063	ppbV	2	25
Bromoform	ND	ND	ppbV	NC	25
Styrene	ND	ND	ppbV	NC	25
1,1,2,2-Tetrachloroethane	ND	ND	ppbV	NC	25
o-Xylene	0.023	0.023	ppbV	0	25
1,3-Dichlorobenzene	ND	ND	ppbV	NC	25
1,4-Dichlorobenzene	ND	ND	ppbV	NC	25
1,2-Dichlorobenzene	ND	ND	ppbV	NC	25
1,2,4-Trichlorobenzene	ND	ND	ppbV	NC	25

Lab Duplicate Analysis
Batch Quality Control

Project Name: NBHS IRA
Project Number: 115058

Lab Number: L1519637
Report Date: 08/20/15

Parameter	Native Sample	Duplicate Sample	Units	RPD	RPD Limits
MCP Volatile Organics in Air by SIM - Mansfield Lab Associated sample(s): 02 QC Batch ID: WG812540-5 QC Sample: L1519637-02 Client ID: VAPOR OUTLET					
Naphthalene	0.060	ND	ppbV	NC	25
Hexachlorobutadiene	ND	ND	ppbV	NC	25

Project Name: NBHS IRA

Project Number: 115058

Lab Number: L1519637

Report Date: 08/20/15

Canister and Flow Controller Information

Samplenum	Client ID	Media ID	Media Type	Date Prepared	Bottle Order	Cleaning Batch ID	Can Leak Check	Initial Pressure (in. Hg)	Pressure on Receipt (in. Hg)	Flow Controler Leak Chk	Flow Out mL/min	Flow In mL/min	% RPD
L1519637-01	VAPOR INLET	0600	SV200	08/13/15	208087		-	-	-	Pass	212	211	0
L1519637-01	VAPOR INLET	508	2.7L Can	08/13/15	208087	L1519055-01	Pass	-29.1	-2.1	-	-	-	-
L1519637-02	VAPOR OUTLET	0685	SV200	08/13/15	208087		-	-	-	Pass	217	219	1
L1519637-02	VAPOR OUTLET	509	2.7L Can	08/13/15	208087	L1519055-01	Pass	-29.3	-2.7	-	-	-	-

Project Name:

Project Number: CANISTER QC BAT

Lab Number: L1519055

Report Date: 08/20/15

Air Canister Certification Results

Lab ID:	L1519055-01	Date Collected:	08/10/15 18:00
Client ID:	CAN 335 SHELF 1	Date Received:	08/11/15
Sample Location:		Field Prep:	Not Specified
Matrix:	Air		
Anaytical Method:	48,TO-15		
Analytical Date:	08/11/15 19:27		
Analyst:	MB		

	ppbV			ug/m3				
Parameter	**Results**	**RL**	**MDL**	**Results**	**RL**	**MDL**	**Qualifier**	**Dilution Factor**
Volatile Organics in Air - Mansfield Lab								
Dichlorodifluoromethane	ND	0.200	--	ND	0.989	--		1
Chloromethane	ND	0.200	--	ND	0.413	--		1
Freon-114	ND	0.200	--	ND	1.40	--		1
Vinyl chloride	ND	0.200	--	ND	0.511	--		1
1,3-Butadiene	ND	0.200	--	ND	0.442	--		1
Butane	ND	0.200	--	ND	0.475	--		1
Acetaldehyde	ND	2.50	--	ND	4.50	--		1
Bromomethane	ND	0.200	--	ND	0.777	--		1
Chloroethane	ND	0.200	--	ND	0.528	--		1
Ethanol	ND	2.50	--	ND	4.71	--		1
Vinyl bromide	ND	0.200	--	ND	0.874	--		1
Acrolein	ND	0.500	--	ND	1.15	--		1
Acetone	ND	1.00	--	ND	2.38	--		1
Trichlorofluoromethane	ND	0.200	--	ND	1.12	--		1
Isopropanol	ND	0.500	--	ND	1.23	--		1
Pentane	ND	0.200	--	ND	0.590	--		1
1,1-Dichloroethene	ND	0.200	--	ND	0.793	--		1
tert-Butyl Alcohol	ND	0.500	--	ND	1.52	--		1
Methylene chloride	ND	1.00	--	ND	1.74	--		1
3-Chloropropene	ND	0.200	--	ND	0.626	--		1
Carbon disulfide	ND	0.200	--	ND	0.623	--		1
Freon-113	ND	0.200	--	ND	1.53	--		1
trans-1,2-Dichloroethene	ND	0.200	--	ND	0.793	--		1
1,1-Dichloroethane	ND	0.200	--	ND	0.809	--		1
Methyl tert butyl ether	ND	0.200	--	ND	0.721	--		1

Project Name:

Project Number: CANISTER QC BAT

Lab Number: L1519055

Report Date: 08/20/15

Air Canister Certification Results

Lab ID: L1519055-01
Client ID: CAN 335 SHELF 1
Sample Location:

Date Collected: 08/10/15 18:00
Date Received: 08/11/15
Field Prep: Not Specified

Parameter	ppbV Results	ppbV RL	ppbV MDL	ug/m3 Results	ug/m3 RL	ug/m3 MDL	Qualifier	Dilution Factor
Volatile Organics in Air - Mansfield Lab								
2-Butanone	ND	0.500	--	ND	1.47	--		1
cis-1,2-Dichloroethene	ND	0.200	--	ND	0.793	--		1
Chloroform	ND	0.200	--	ND	0.977	--		1
1,2-Dichloroethane	ND	0.200	--	ND	0.809	--		1
n-Hexane	ND	0.200	--	ND	0.705	--		1
1,1,1-Trichloroethane	ND	0.200	--	ND	1.09	--		1
Benzene	ND	0.200	--	ND	0.639	--		1
Thiophene	ND	0.200	--	ND	0.688	--		1
Carbon tetrachloride	ND	0.200	--	ND	1.26	--		1
Cyclohexane	ND	0.200	--	ND	0.688	--		1
1,2-Dichloropropane	ND	0.200	--	ND	0.924	--		1
Bromodichloromethane	ND	0.200	--	ND	1.34	--		1
1,4-Dioxane	ND	0.200	--	ND	0.721	--		1
Trichloroethene	ND	0.200	--	ND	1.07	--		1
2,2,4-Trimethylpentane	ND	0.200	--	ND	0.934	--		1
Heptane	ND	0.200	--	ND	0.820	--		1
cis-1,3-Dichloropropene	ND	0.200	--	ND	0.908	--		1
4-Methyl-2-pentanone	ND	0.500	--	ND	2.05	--		1
trans-1,3-Dichloropropene	ND	0.200	--	ND	0.908	--		1
1,1,2-Trichloroethane	ND	0.200	--	ND	1.09	--		1
Toluene	ND	0.200	--	ND	0.754	--		1
2-Methylthiophene	ND	0.200	--	ND	0.803	--		1
2-Hexanone	ND	0.200	--	ND	0.820	--		1
3-Methylthiophene	ND	0.200	--	ND	0.803	--		1
Dibromochloromethane	ND	0.200	--	ND	1.70	--		1
1,2-Dibromoethane	ND	0.200	--	ND	1.54	--		1
Octane	ND	0.200	--	ND	0.934	--		1
Tetrachloroethene	ND	0.200	--	ND	1.36	--		1

Project Name:

Project Number: CANISTER QC BAT

Lab Number: L1519055

Report Date: 08/20/15

Air Canister Certification Results

Lab ID: L1519055-01
Client ID: CAN 335 SHELF 1
Sample Location:

Date Collected: 08/10/15 18:00
Date Received: 08/11/15
Field Prep: Not Specified

Parameter	ppbV Results	ppbV RL	ppbV MDL	ug/m3 Results	ug/m3 RL	ug/m3 MDL	Qualifier	Dilution Factor
Volatile Organics in Air - Mansfield Lab								
Chlorobenzene	ND	0.200	--	ND	0.921	--		1
Ethylbenzene	ND	0.200	--	ND	0.869	--		1
2-Ethylthiophene	ND	0.200	--	ND	0.918	--		1
p/m-Xylene	ND	0.400	--	ND	1.74	--		1
Bromoform	ND	0.200	--	ND	2.07	--		1
Styrene	ND	0.200	--	ND	0.852	--		1
1,1,2,2-Tetrachloroethane	ND	0.200	--	ND	1.37	--		1
o-Xylene	ND	0.200	--	ND	0.869	--		1
Nonane	ND	0.200	--	ND	1.05	--		1
2-Chlorotoluene	ND	0.200	--	ND	1.04	--		1
4-Ethyltoluene	ND	0.200	--	ND	0.983	--		1
1,3,5-Trimethybenzene	ND	0.200	--	ND	0.983	--		1
1,2,4-Trimethylbenzene	ND	0.200	--	ND	0.983	--		1
Decane	ND	0.200	--	ND	1.16	--		1
1,3-Dichlorobenzene	ND	0.200	--	ND	1.20	--		1
1,4-Dichlorobenzene	ND	0.200	--	ND	1.20	--		1
1,2,3-Trimethylbenzene	ND	0.200	--	ND	0.983	--		1
1,2-Dichlorobenzene	ND	0.200	--	ND	1.20	--		1
Indane	ND	0.200	--	ND	0.967	--		1
Indene	ND	0.200	--	ND	0.951	--		1
Undecane	ND	0.200	--	ND	1.28	--		1
1,2,4,5-Tetramethylbenzene	ND	0.200	--	ND	1.10	--		1
Dodecane	ND	0.200	--	ND	1.39	--		1
1,2,4-Trichlorobenzene	ND	0.200	--	ND	1.48	--		1
Naphthalene	ND	0.200	--	ND	1.05	--		1
Benzothiophene	ND	0.500	--	ND	2.74	--		1
Hexachlorobutadiene	ND	0.200	--	ND	2.13	--		1
2-Methylnaphthalene	ND	1.00	--	ND	5.82	--		1

Project Name:

Project Number: CANISTER QC BAT

Lab Number: L1519055

Report Date: 08/20/15

Air Canister Certification Results

Lab ID: L1519055-01
Client ID: CAN 335 SHELF 1
Sample Location:

Date Collected: 08/10/15 18:00
Date Received: 08/11/15
Field Prep: Not Specified

Parameter	ppbV Results	ppbV RL	ppbV MDL	ug/m3 Results	ug/m3 RL	ug/m3 MDL	Qualifier	Dilution Factor
Volatile Organics in Air - Mansfield Lab								
1-Methylnaphthalene	ND	1.00	--	ND	5.82	--		1

Internal Standard	% Recovery	Qualifier	Acceptance Criteria
1,4-Difluorobenzene	97		60-140
Bromochloromethane	93		60-140
chlorobenzene-d5	98		60-140

Project Name:

Project Number: CANISTER QC BAT

Lab Number: L1519055

Report Date: 08/20/15

Air Canister Certification Results

Lab ID:	L1519055-01	Date Collected:	08/10/15 18:00
Client ID:	CAN 335 SHELF 1	Date Received:	08/11/15
Sample Location:		Field Prep:	Not Specified
Matrix:	Air		
Anaytical Method:	48,TO-15		
Analytical Date:	08/11/15 19:59		
Analyst:	MB		

	ppbV			ug/m3				
Parameter	**Results**	**RL**	**MDL**	**Results**	**RL**	**MDL**	**Qualifier**	**Dilution Factor**
Volatile Organics in Air - Mansfield Lab								
Chlorodifluoromethane	ND	0.200	--	ND	0.707	--		1
Propylene	ND	0.500	--	ND	0.861	--		1
Propane	ND	0.500	--	ND	0.902	--		1
Dichlorodifluoromethane	ND	0.200	--	ND	0.989	--		1
Chloromethane	ND	0.200	--	ND	0.413	--		1
1,2-Dichloro-1,1,2,2-tetrafluoroethane	ND	0.200	--	ND	1.40	--		1
Methanol	ND	5.00	--	ND	6.55	--		1
Vinyl chloride	ND	0.200	--	ND	0.511	--		1
1,3-Butadiene	ND	0.200	--	ND	0.442	--		1
Butane	ND	0.200	--	ND	0.475	--		1
Bromomethane	ND	0.200	--	ND	0.777	--		1
Chloroethane	ND	0.200	--	ND	0.528	--		1
Ethyl Alcohol	ND	2.50	--	ND	4.71	--		1
Dichlorofluoromethane	ND	0.200	--	ND	0.842	--		1
Vinyl bromide	ND	0.200	--	ND	0.874	--		1
Acrolein	ND	0.500	--	ND	1.15	--		1
Acetone	ND	1.00	--	ND	2.38	--		1
Acetonitrile	ND	0.200	--	ND	0.336	--		1
Trichlorofluoromethane	ND	0.200	--	ND	1.12	--		1
iso-Propyl Alcohol	ND	0.500	--	ND	1.23	--		1
Acrylonitrile	ND	0.500	--	ND	1.09	--		1
Pentane	ND	0.200	--	ND	0.590	--		1
Ethyl ether	ND	0.200	--	ND	0.606	--		1
1,1-Dichloroethene	ND	0.200	--	ND	0.793	--		1
tert-Butyl Alcohol	ND	0.500	--	ND	1.52	--		1

Project Name:

Project Number: CANISTER QC BAT

Lab Number: L1519055

Report Date: 08/20/15

Air Canister Certification Results

Lab ID: L1519055-01
Client ID: CAN 335 SHELF 1
Sample Location:

Date Collected: 08/10/15 18:00
Date Received: 08/11/15
Field Prep: Not Specified

Parameter	ppbV Results	ppbV RL	ppbV MDL	ug/m3 Results	ug/m3 RL	ug/m3 MDL	Qualifier	Dilution Factor
Volatile Organics in Air - Mansfield Lab								
Methylene chloride	ND	0.500	--	ND	1.74	--		1
3-Chloropropene	ND	0.200	--	ND	0.626	--		1
Carbon disulfide	ND	0.200	--	ND	0.623	--		1
1,1,2-Trichloro-1,2,2-Trifluoroethane	ND	0.200	--	ND	1.53	--		1
trans-1,2-Dichloroethene	ND	0.200	--	ND	0.793	--		1
1,1-Dichloroethane	ND	0.200	--	ND	0.809	--		1
Methyl tert butyl ether	ND	0.200	--	ND	0.721	--		1
Vinyl acetate	ND	1.00	--	ND	3.52	--		1
2-Butanone	ND	0.500	--	ND	1.47	--		1
cis-1,2-Dichloroethene	ND	0.200	--	ND	0.793	--		1
Ethyl Acetate	ND	0.500	--	ND	1.80	--		1
Chloroform	ND	0.200	--	ND	0.977	--		1
Tetrahydrofuran	ND	0.500	--	ND	1.47	--		1
2,2-Dichloropropane	ND	0.200	--	ND	0.924	--		1
1,2-Dichloroethane	ND	0.200	--	ND	0.809	--		1
n-Hexane	ND	0.200	--	ND	0.705	--		1
Isopropyl Ether	ND	0.200	--	ND	0.836	--		1
Ethyl-Tert-Butyl-Ether	ND	0.200	--	ND	0.836	--		1
1,1,1-Trichloroethane	ND	0.200	--	ND	1.09	--		1
1,1-Dichloropropene	ND	0.200	--	ND	0.908	--		1
Benzene	ND	0.200	--	ND	0.639	--		1
Carbon tetrachloride	ND	0.200	--	ND	1.26	--		1
Cyclohexane	ND	0.200	--	ND	0.688	--		1
Tertiary-Amyl Methyl Ether	ND	0.200	--	ND	0.836	--		1
Dibromomethane	ND	0.200	--	ND	1.42	--		1
1,2-Dichloropropane	ND	0.200	--	ND	0.924	--		1
Bromodichloromethane	ND	0.200	--	ND	1.34	--		1
1,4-Dioxane	ND	0.200	--	ND	0.721	--		1

Project Name:

Project Number: CANISTER QC BAT

Lab Number: L1519055

Report Date: 08/20/15

Air Canister Certification Results

Lab ID: L1519055-01
Client ID: CAN 335 SHELF 1
Sample Location:

Date Collected: 08/10/15 18:00
Date Received: 08/11/15
Field Prep: Not Specified

Parameter	ppbV Results	ppbV RL	ppbV MDL	ug/m3 Results	ug/m3 RL	ug/m3 MDL	Qualifier	Dilution Factor
Volatile Organics in Air - Mansfield Lab								
Trichloroethene	ND	0.200	--	ND	1.07	--		1
2,2,4-Trimethylpentane	ND	0.200	--	ND	0.934	--		1
Methyl Methacrylate	ND	0.500	--	ND	2.05	--		1
Heptane	ND	0.200	--	ND	0.820	--		1
cis-1,3-Dichloropropene	ND	0.200	--	ND	0.908	--		1
4-Methyl-2-pentanone	ND	0.500	--	ND	2.05	--		1
trans-1,3-Dichloropropene	ND	0.200	--	ND	0.908	--		1
1,1,2-Trichloroethane	ND	0.200	--	ND	1.09	--		1
Toluene	ND	0.200	--	ND	0.754	--		1
1,3-Dichloropropane	ND	0.200	--	ND	0.924	--		1
2-Hexanone	ND	0.200	--	ND	0.820	--		1
Dibromochloromethane	ND	0.200	--	ND	1.70	--		1
1,2-Dibromoethane	ND	0.200	--	ND	1.54	--		1
Butyl Acetate	ND	0.500	--	ND	2.38	--		1
Octane	ND	0.200	--	ND	0.934	--		1
Tetrachloroethene	ND	0.200	--	ND	1.36	--		1
1,1,1,2-Tetrachloroethane	ND	0.200	--	ND	1.37	--		1
Chlorobenzene	ND	0.200	--	ND	0.921	--		1
Ethylbenzene	ND	0.200	--	ND	0.869	--		1
p/m-Xylene	ND	0.400	--	ND	1.74	--		1
Bromoform	ND	0.200	--	ND	2.07	--		1
Styrene	ND	0.200	--	ND	0.852	--		1
1,1,2,2-Tetrachloroethane	ND	0.200	--	ND	1.37	--		1
o-Xylene	ND	0.200	--	ND	0.869	--		1
1,2,3-Trichloropropane	ND	0.200	--	ND	1.21	--		1
Nonane (C9)	ND	0.200	--	ND	1.05	--		1
Isopropylbenzene	ND	0.200	--	ND	0.983	--		1
Bromobenzene	ND	0.200	--	ND	0.793	--		1

Project Name:

Project Number: CANISTER QC BAT

Lab Number: L1519055

Report Date: 08/20/15

Air Canister Certification Results

Lab ID: L1519055-01
Client ID: CAN 335 SHELF 1
Sample Location:

Date Collected: 08/10/15 18:00
Date Received: 08/11/15
Field Prep: Not Specified

Parameter	ppbV Results	ppbV RL	ppbV MDL	ug/m3 Results	ug/m3 RL	ug/m3 MDL	Qualifier	Dilution Factor
Volatile Organics in Air - Mansfield Lab								
o-Chlorotoluene	ND	0.200	--	ND	1.04	--		1
n-Propylbenzene	ND	0.200	--	ND	0.983	--		1
p-Chlorotoluene	ND	0.200	--	ND	1.04	--		1
4-Ethyltoluene	ND	0.200	--	ND	0.983	--		1
1,3,5-Trimethylbenzene	ND	0.200	--	ND	0.983	--		1
tert-Butylbenzene	ND	0.200	--	ND	1.10	--		1
1,2,4-Trimethylbenzene	ND	0.200	--	ND	0.983	--		1
Decane (C10)	ND	0.200	--	ND	1.16	--		1
Benzyl chloride	ND	0.200	--	ND	1.04	--		1
1,3-Dichlorobenzene	ND	0.200	--	ND	1.20	--		1
1,4-Dichlorobenzene	ND	0.200	--	ND	1.20	--		1
sec-Butylbenzene	ND	0.200	--	ND	1.10	--		1
p-Isopropyltoluene	ND	0.200	--	ND	1.10	--		1
1,2-Dichlorobenzene	ND	0.200	--	ND	1.20	--		1
n-Butylbenzene	ND	0.200	--	ND	1.10	--		1
1,2-Dibromo-3-chloropropane	ND	0.200	--	ND	1.93	--		1
Undecane	ND	0.200	--	ND	1.28	--		1
Dodecane (C12)	ND	0.200	--	ND	1.39	--		1
1,2,4-Trichlorobenzene	ND	0.200	--	ND	1.48	--		1
Naphthalene	ND	0.200	--	ND	1.05	--		1
1,2,3-Trichlorobenzene	ND	0.200	--	ND	1.48	--		1
Hexachlorobutadiene	ND	0.200	--	ND	2.13	--		1

	Results	Qualifier	Units	RDL	Dilution Factor
Tentatively Identified Compounds					
Unknown	1.9	J	ppbV		1

Project Name:

Project Number: CANISTER QC BAT

Lab Number: L1519055

Report Date: 08/20/15

Air Canister Certification Results

Lab ID:	L1519055-01	Date Collected:	08/10/15 18:00
Client ID:	CAN 335 SHELF 1	Date Received:	08/11/15
Sample Location:		Field Prep:	Not Specified

	ppbV			ug/m3				
Parameter	**Results**	**RL**	**MDL**	**Results**	**RL**	**MDL**	**Qualifier**	**Dilution Factor**
Volatile Organics in Air - Mansfield Lab								

Internal Standard	**% Recovery**	**Qualifier**	**Acceptance Criteria**
1,4-Difluorobenzene	92		60-140
Bromochloromethane	89		60-140
chlorobenzene-d5	93		60-140

Project Name:

Project Number: CANISTER QC BAT

Lab Number: L1519055

Report Date: 08/20/15

Air Canister Certification Results

Lab ID:	L1519055-01	Date Collected:	08/10/15 18:00
Client ID:	CAN 335 SHELF 1	Date Received:	08/11/15
Sample Location:		Field Prep:	Not Specified
Matrix:	Air		
Anaytical Method:	48,TO-15-SIM		
Analytical Date:	08/11/15 19:59		
Analyst:	MB		

	ppbV			ug/m3				
Parameter	**Results**	**RL**	**MDL**	**Results**	**RL**	**MDL**	**Qualifier**	**Dilution Factor**
Volatile Organics in Air by SIM - Mansfield Lab								
Dichlorodifluoromethane	ND	0.200	--	ND	0.989	--		1
Chloromethane	ND	0.200	--	ND	0.413	--		1
1,2-Dichloro-1,1,2,2-tetrafluoroethane	ND	0.050	--	ND	0.349	--		1
Vinyl chloride	ND	0.020	--	ND	0.051	--		1
1,3-Butadiene	ND	0.020	--	ND	0.044	--		1
Bromomethane	ND	0.020	--	ND	0.078	--		1
Chloroethane	ND	0.020	--	ND	0.053	--		1
Acetone	ND	1.00	--	ND	2.38	--		1
Trichlorofluoromethane	ND	0.050	--	ND	0.281	--		1
Acrylonitrile	ND	0.500	--	ND	1.09	--		1
1,1-Dichloroethene	ND	0.020	--	ND	0.079	--		1
Methylene chloride	ND	0.500	--	ND	1.74	--		1
1,1,2-Trichloro-1,2,2-Trifluoroethane	ND	0.050	--	ND	0.383	--		1
Halothane	ND	0.050	--	ND	0.404	--		1
trans-1,2-Dichloroethene	ND	0.020	--	ND	0.079	--		1
1,1-Dichloroethane	ND	0.020	--	ND	0.081	--		1
Methyl tert butyl ether	ND	0.200	--	ND	0.721	--		1
2-Butanone	ND	0.500	--	ND	1.47	--		1
cis-1,2-Dichloroethene	ND	0.020	--	ND	0.079	--		1
Chloroform	ND	0.020	--	ND	0.098	--		1
1,2-Dichloroethane	ND	0.020	--	ND	0.081	--		1
1,1,1-Trichloroethane	ND	0.020	--	ND	0.109	--		1
Benzene	ND	0.100	--	ND	0.319	--		1
Carbon tetrachloride	ND	0.020	--	ND	0.126	--		1
1,2-Dichloropropane	ND	0.020	--	ND	0.092	--		1

Project Name:

Project Number: CANISTER QC BAT

Lab Number: L1519055

Report Date: 08/20/15

Air Canister Certification Results

Lab ID: L1519055-01
Client ID: CAN 335 SHELF 1
Sample Location:

Date Collected: 08/10/15 18:00
Date Received: 08/11/15
Field Prep: Not Specified

Parameter	ppbV Results	ppbV RL	ppbV MDL	ug/m3 Results	ug/m3 RL	ug/m3 MDL	Qualifier	Dilution Factor
Volatile Organics in Air by SIM - Mansfield Lab								
Bromodichloromethane	ND	0.020	--	ND	0.134	--		1
1,4-Dioxane	ND	0.100	--	ND	0.360	--		1
Trichloroethene	ND	0.020	--	ND	0.107	--		1
cis-1,3-Dichloropropene	ND	0.020	--	ND	0.091	--		1
4-Methyl-2-pentanone	ND	0.500	--	ND	2.05	--		1
trans-1,3-Dichloropropene	ND	0.020	--	ND	0.091	--		1
1,1,2-Trichloroethane	ND	0.020	--	ND	0.109	--		1
Toluene	ND	0.050	--	ND	0.188	--		1
Dibromochloromethane	ND	0.020	--	ND	0.170	--		1
1,2-Dibromoethane	ND	0.020	--	ND	0.154	--		1
Tetrachloroethene	ND	0.020	--	ND	0.136	--		1
1,1,1,2-Tetrachloroethane	ND	0.020	--	ND	0.137	--		1
Chlorobenzene	ND	0.020	--	ND	0.092	--		1
Ethylbenzene	ND	0.020	--	ND	0.087	--		1
p/m-Xylene	ND	0.040	--	ND	0.174	--		1
Bromoform	ND	0.020	--	ND	0.207	--		1
Styrene	ND	0.020	--	ND	0.085	--		1
1,1,2,2-Tetrachloroethane	ND	0.020	--	ND	0.137	--		1
o-Xylene	ND	0.020	--	ND	0.087	--		1
Isopropylbenzene	ND	0.200	--	ND	0.983	--		1
4-Ethyltoluene	ND	0.020	--	ND	0.098	--		1
1,3,5-Trimethylbenzene	ND	0.020	--	ND	0.098	--		1
1,2,4-Trimethylbenzene	ND	0.020	--	ND	0.098	--		1
1,3-Dichlorobenzene	ND	0.020	--	ND	0.120	--		1
1,4-Dichlorobenzene	ND	0.020	--	ND	0.120	--		1
sec-Butylbenzene	ND	0.200	--	ND	1.10	--		1
p-Isopropyltoluene	ND	0.200	--	ND	1.10	--		1
1,2-Dichlorobenzene	ND	0.020	--	ND	0.120	--		1

Project Name:

Project Number: CANISTER QC BAT

Lab Number: L1519055

Report Date: 08/20/15

Air Canister Certification Results

Lab ID: L1519055-01
Client ID: CAN 335 SHELF 1
Sample Location:

Date Collected: 08/10/15 18:00
Date Received: 08/11/15
Field Prep: Not Specified

Parameter	ppbV Results	ppbV RL	ppbV MDL	ug/m3 Results	ug/m3 RL	ug/m3 MDL	Qualifier	Dilution Factor
Volatile Organics in Air by SIM - Mansfield Lab								
n-Butylbenzene	ND	0.200	--	ND	1.10	--		1
1,2,4-Trichlorobenzene	ND	0.050	--	ND	0.371	--		1
Naphthalene	ND	0.050	--	ND	0.262	--		1
1,2,3-Trichlorobenzene	ND	0.050	--	ND	0.371	--		1
Hexachlorobutadiene	ND	0.050	--	ND	0.533	--		1

Internal Standard	% Recovery	Qualifier	Acceptance Criteria
1,4-difluorobenzene	95		60-140
bromochloromethane	93		60-140
chlorobenzene-d5	94		60-140

Project Name: NBHS IRA
Project Number: 115058

Lab Number: L1519637
Report Date: 08/20/15

Sample Receipt and Container Information

Were project specific reporting limits specified? YES

Reagent H2O Preserved Vials Frozen on: NA

Cooler Information **Custody Seal**

Cooler	
N/A	Absent

Container Information

Container ID	Container Type	Cooler	pH	Temp deg C	Pres	Seal	Analysis(*)
L1519637-01A	Canister - 2.7 Liter	N/A	N/A		Y	Absent	MCP-TO15(30)
L1519637-02A	Canister - 2.7 Liter	N/A	N/A		Y	Absent	MCP-TO15-SIM(30)

*Values in parentheses indicate holding time in days

Project Name: NBHS IRA **Lab Number:** L1519637

Project Number: 115058 **Report Date:** 08/20/15

GLOSSARY

Acronyms

EDL	- Estimated Detection Limit: This value represents the level to which target analyte concentrations are reported as estimated values, when those target analyte concentrations are quantified below the reporting limit (RL). The EDL includes any adjustments from dilutions, concentrations or moisture content, where applicable. The use of EDLs is specific to the analysis of PAHs using Solid-Phase Microextraction (SPME).
EPA	- Environmental Protection Agency.
LCS	- Laboratory Control Sample: A sample matrix, free from the analytes of interest, spiked with verified known amounts of analytes or a material containing known and verified amounts of analytes.
LCSD	- Laboratory Control Sample Duplicate: Refer to LCS.
LFB	- Laboratory Fortified Blank: A sample matrix, free from the analytes of interest, spiked with verified known amounts of analytes or a material containing known and verified amounts of analytes.
MDL	- Method Detection Limit: This value represents the level to which target analyte concentrations are reported as estimated values, when those target analyte concentrations are quantified below the reporting limit (RL). The MDL includes any adjustments from dilutions, concentrations or moisture content, where applicable.
MS	- Matrix Spike Sample: A sample prepared by adding a known mass of target analyte to a specified amount of matrix sample for which an independent estimate of target analyte concentration is available.
MSD	- Matrix Spike Sample Duplicate: Refer to MS.
NA	- Not Applicable.
NC	- Not Calculated: Term is utilized when one or more of the results utilized in the calculation are non-detect at the parameter's reporting unit.
NI	- Not Ignitable.
NP	- Non-Plastic: Term is utilized for the analysis of Atterberg Limits in soil.
RL	- Reporting Limit: The value at which an instrument can accurately measure an analyte at a specific concentration. The RL includes any adjustments from dilutions, concentrations or moisture content, where applicable.
RPD	- Relative Percent Difference: The results from matrix and/or matrix spike duplicates are primarily designed to assess the precision of analytical results in a given matrix and are expressed as relative percent difference (RPD). Values which are less than five times the reporting limit for any individual parameter are evaluated by utilizing the absolute difference between the values; although the RPD value will be provided in the report.
SRM	- Standard Reference Material: A reference sample of a known or certified value that is of the same or similar matrix as the associated field samples.
TIC	- Tentatively Identified Compound: A compound that has been identified to be present and is not part of the target compound list (TCL) for the method and/or program. All TICs are qualitatively identified and reported as estimated concentrations.

Footnotes

1	- The reference for this analyte should be considered modified since this analyte is absent from the target analyte list of the original method.

Terms

Total: With respect to Organic analyses, a 'Total' result is defined as the summation of results for individual isomers or Aroclors. If a 'Total' result is requested, the results of its individual components will also be reported. This is applicable to 'Total' results for methods 8260, 8081 and 8082.

Analytical Method: Both the document from which the method originates and the analytical reference method. (Example: EPA 8260B is shown as 1,8260B.) The codes for the reference method documents are provided in the References section of the Addendum.

Data Qualifiers

A	- Spectra identified as "Aldol Condensation Product".
B	- The analyte was detected above the reporting limit in the associated method blank. Flag only applies to associated field samples that have detectable concentrations of the analyte at less than ten times (10x) the concentration found in the blank. For MCP-related projects, flag only applies to associated field samples that have detectable concentrations of the analyte at less than ten times (10x) the concentration found in the blank. For DOD-related projects, flag only applies to associated field samples that have detectable concentrations of the analyte at less than ten times (10x) the concentration found in the blank AND the analyte was detected above one-half the reporting limit (or above the reporting limit for common lab contaminants) in the associated method blank. For NJ-Air-related projects, flag only applies to associated field samples that have detectable concentrations of the analyte above the reporting limit. For NJ-related projects (excluding Air), flag only applies to associated field samples that have detectable concentrations of the analyte, which was detected above the reporting limit in the associated method blank or above five times the reporting limit for common lab contaminants (Phthalates, Acetone, Methylene Chloride, 2-Butanone).
C	- Co-elution: The target analyte co-elutes with a known lab standard (i.e. surrogate, internal standards, etc.) for co-extracted analyses.

Report Format: Data Usability Report

Project Name: NBHS IRA **Lab Number:** L1519637

Project Number: 115058 **Report Date:** 08/20/15

Data Qualifiers

D - Concentration of analyte was quantified from diluted analysis. Flag only applies to field samples that have detectable concentrations of the analyte.

E - Concentration of analyte exceeds the range of the calibration curve and/or linear range of the instrument.

G - The concentration may be biased high due to matrix interferences (i.e, co-elution) with non-target compound(s). The result should be considered estimated.

H - The analysis of pH was performed beyond the regulatory-required holding time of 15 minutes from the time of sample collection.

I - The lower value for the two columns has been reported due to obvious interference.

M - Reporting Limit (RL) exceeds the MCP CAM Reporting Limit for this analyte.

NJ - Presumptive evidence of compound. This represents an estimated concentration for Tentatively Identified Compounds (TICs), where the identification is based on a mass spectral library search.

P - The RPD between the results for the two columns exceeds the method-specified criteria.

Q - The quality control sample exceeds the associated acceptance criteria. For DOD-related projects, LCS and/or Continuing Calibration Standard exceedences are also qualified on all associated sample results. Note: This flag is not applicable for matrix spike recoveries when the sample concentration is greater than 4x the spike added or for batch duplicate RPD when the sample concentrations are less than 5x the RL. (Metals only.)

R - Analytical results are from sample re-analysis.

RE - Analytical results are from sample re-extraction.

S - Analytical results are from modified screening analysis.

J - Estimated value. This represents an estimated concentration for Tentatively Identified Compounds (TICs).

ND - Not detected at the reporting limit (RL) for the sample.

Report Format: Data Usability Report

Project Name: NBHS IRA
Project Number: 115058
Lab Number: L1519637
Report Date: 08/20/15

REFERENCES

101 Compendium of Methods for the Determination of Toxic Organic Compounds in Ambient Air (EPA/625/R-96/010b:January 1999) with QC Requirements & Performance Standards for the Analysis of TO-15 under the Massachusetts Contingency Plan, WSC-CAM-IXB, July 2010.

LIMITATION OF LIABILITIES

Alpha Analytical performs services with reasonable care and diligence normal to the analytical testing laboratory industry. In the event of an error, the sole and exclusive responsibility of Alpha Analytical shall be to re-perform the work at it's own expense. In no event shall Alpha Analytical be held liable for any incidental, consequential or special damages, including but not limited to, damages in any way connected with the use of, interpretation of, information or analysis provided by Alpha Analytical.

We strongly urge our clients to comply with EPA protocol regarding sample volume, preservation, cooling, containers, sampling procedures, holding time and splitting of samples in the field.

Certification Information

Last revised December 16, 2014

The following analytes are not included in our NELAP Scope of Accreditation:

Westborough Facility
EPA 524.2: Acetone, 2-Butanone (Methyl ethyl ketone (MEK)), Tert-butyl alcohol, 2-Hexanone, Tetrahydrofuran, 1,3,5-Trichlorobenzene, 4-Methyl-2-pentanone (MIBK), Carbon disulfide, Diethyl ether.
EPA 8260C: 1,2,4,5-Tetramethylbenzene, 4-Ethyltoluene, Iodomethane (methyl iodide), Methyl methacrylate, Azobenzene.
EPA 8270D: 1-Methylnaphthalene, Dimethylnaphthalene,1,4-Diphenylhydrazine.
EPA 625: 4-Chloroaniline, 4-Methylphenol.
SM4500: Soil: Total Phosphorus, TKN, NO2, NO3.
EPA 9071: Total Petroleum Hydrocarbons, Oil & Grease.

Mansfield Facility
EPA 8270D: Biphenyl.
EPA 2540D: TSS
EPA TO-15: Halothane, 2,4,4-Trimethyl-2-pentene, 2,4,4-Trimethyl-1-pentene, Thiophene, 2-Methylthiophene, 3-Methylthiophene, 2-Ethylthiophene, 1,2,3-Trimethylbenzene, Indan, Indene, 1,2,4,5-Tetramethylbenzene, Benzothiophene, 1-Methylnaphthalene.

The following analytes are included in our Massachusetts DEP Scope of Accreditation, Westborough Facility:

Drinking Water
EPA 200.8: Sb,As,Ba,Be,Cd,Cr,Cu,Pb,Ni,Se,Tl; **EPA 200.7**: Ba,Be,Ca,Cd,Cr,Cu,Na; **EPA 245.1:** Mercury;
EPA 300.0: Nitrate-N, Fluoride, Sulfate; **EPA 353.2**: Nitrate-N, Nitrite-N; **SM4500NO3-F**: Nitrate-N, Nitrite-N; **SM4500F-C, SM4500CN-CE, EPA 180.1, SM2130B, SM4500Cl-D, SM2320B, SM2540C, SM4500H-B**
EPA 332: Perchlorate.
Microbiology: **SM9215B; SM9223-P/A, SM9223B-Colilert-QT, Enterolert-QT.**

Non-Potable Water
EPA 200.8: Al,Sb,As,Be,Cd,Cr,Cu,Pb,Mn,Ni,Se,Ag,Tl,Zn;
EPA 200.7: Al,Sb,As,Be,Cd,Ca,Cr,Co,Cu,Fe,Pb,Mg,Mn,Mo,Ni,K,Se,Ag,Na,Sr,Ti,Tl,V,Zn;
EPA 245.1, SM4500H,B, EPA 120.1, SM2510B, SM2540C, SM2340B, SM2320B, SM4500CL-E, SM4500F-BC, SM426C, SM4500NH3-BH, **EPA 350.1**: Ammonia-N, **LACHAT 10-107-06-1-B**: Ammonia-N, **SM4500NO3-F,**
EPA 353.2: Nitrate-N**, SM4500NH3-BC-NES, EPA 351.1, SM4500P-E, SM4500P-B, E, SM5220D, EPA 410.4, SM5210B, SM5310C, SM4500CL-D, EPA 1664, SM14 510AC, EPA 420.1, SM4500-CN-CE, SM2540D.**
EPA 624: Volatile Halocarbons & Aromatics,
EPA 608: Chlordane, Toxaphene, Aldrin, alpha-BHC, beta-BHC, gamma-BHC, delta-BHC, Dieldrin, DDD, DDE, DDT, Endosulfan I, Endosulfan II, Endosulfan sulfate, Endrin, Endrin Aldehyde, Heptachlor, Heptachlor Epoxide, PCBs
EPA 625: SVOC (Acid/Base/Neutral Extractables), **EPA 600/4-81-045**: PCB-Oil.
Microbiology: **SM9223B-Colilert-QT; Enterolert-QT, SM9222D-MF**.

For a complete listing of analytes and methods, please contact your Alpha Project Manager.

AIR ANALYSIS

PAGE 1 OF 1

CHAIN OF CUSTODY

ALPHA ANALYTICAL
320 Forbes Blvd, Mansfield, MA 02048
TEL: 508-822-9300 FAX: 508-822-3288

Date Rec'd in Lab: 8/14/15

ALPHA Job #: L1519637

Client Information

Client: TRC
Address: 650 SUFFOLK ST.
LOWELL MA
Phone: 978-970-5600
Fax: -
Email: DSULLIVAN@TRCSOLUTIONS.COM
☑ These samples have been previously analyzed by Alpha

Project Information

Project Name: NBHS IRA
Project Location: NEW BEDFORD.
Project #: 115058
Project Manager: DAVID SULLIVAN
ALPHA Quote #:

Turn-Around Time

☑ Standard ☐ RUSH (only confirmed if pre-approved!)
Date Due: Time:

Report Information - Data Deliverables

☐ FAX
☑ ADEx
Criteria Checker:
(Default based on Regulatory Criteria Indicated)
Other Formats:
☑ EMAIL (standard pdf report)
☐ Additional Deliverables:
Report to: (if different than Project Manager)

Billing Information

☐ Same as Client info PO #: C115058

Regulatory Requirements/Report Limits

State/Fed	Program	Criteria

Other Project Specific Requirements/Comments:

All Columns Below Must Be Filled Out

ANALYSIS

ALPHA Lab ID (Lab Use Only)	Sample ID	Collection Date	Start Time	End Time	Initial Vacuum	Final Vacuum	Sample Matrix*	Sampler's Initials	Can Size	I D Can	I D - Flow Controller	TO-14A by TO-15	TO-15	TO-15 SIM	APH	FIXED GASES	TO-13A	TO-4 / TO-10	Sample Comments (i.e. PID)
1963701	VAPOR INLET	8/14/15	8:40	8:54	-31	-2.5	SV	JF	2.7 l	508	0600		✓						
-02	VAPOR OUTLET	8/14/15	8:45	8:57	-29.3	-2.4	O	JF	2.7 l	509	0685			✓					
Container Type													CG	CG					

*SAMPLE MATRIX CODES
AA = Ambient Air (Indoor/Outdoor)
SV = Soil Vapor/Landfill Gas/SVE
Other = Please Specify

Relinquished By:	Date/Time	Received By:	Date/Time:
James C. Tum	8/14/15 15:35	[illegible]	8/14/15 15:35

Please print clearly, legibly and completely. Samples can not be logged in and turnaround time clock will not start until any ambiguities are resolved. All samples submitted are subject to Alpha's Terms and Conditions. See reverse side.

ANALYTICAL REPORT

Lab Number:	L1519674
Client:	TRC Environmental Consultants Wannalancit Mills 650 Suffolk Street Lowell, MA 01854
ATTN:	David Sullivan
Phone:	(978) 656-3565
Project Name:	NBHS IRA
Project Number:	115058
Report Date:	08/28/15

The original project report/data package is held by Alpha Analytical. This report/data package is paginated and should be reproduced only in its entirety. Alpha Analytical holds no responsibility for results and/or data that are not consistent with the original.

Certifications & Approvals: NY (11627), CT (PH-0141), NH (2206), NJ NELAP (MA015), RI (LAO00299), ME (MA00030), PA (68-02089), VA (460194), LA NELAP (03090), FL (E87814), TX (T104704419), WA (C954), USFWS (Permit #LE2069641), USDA (Permit #P330-11-00109), US Army Corps of Engineers.

320 Forbes Boulevard, Mansfield, MA 02048-1806
508-822-9300 (Fax) 508-822-3288 800-624-9220 - www.alphalab.com

Project Name: NBHS IRA
Project Number: 115058

Lab Number: L1519674
Report Date: 08/28/15

Alpha Sample ID	Client ID	Matrix	Sample Location	Collection Date/Time	Receive Date
L1519674-01	VAPOR INLET	AIR MEDIA	NEW BEDFORD	08/14/15 13:05	08/14/15
L1519674-02	VAPOR OUTLET	AIR MEDIA	NEW BEDFORD	08/14/15 13:10	08/14/15

Project Name: NBHS IRA
Project Number: 115058

Lab Number: L1519674
Report Date: 08/28/15

Case Narrative

The samples were received in accordance with the Chain of Custody and no significant deviations were encountered during the preparation or analysis unless otherwise noted. Sample Receipt, Container Information, and the Chain of Custody are located at the back of the report.

Results contained within this report relate only to the samples submitted under this Alpha Lab Number and meet all of the requirements of NELAC, for all NELAC accredited parameters. The data presented in this report is organized by parameter (i.e. VOC, SVOC, etc.). Sample specific Quality Control data (i.e. Surrogate Spike Recovery) is reported at the end of the target analyte list for each individual sample, followed by the Laboratory Batch Quality Control at the end of each parameter. Tentatively Identified Compounds (TICs), if requested, are reported for compounds identified to be present and are not part of the method/program Target Compound List, even if only a subset of the TCL are being reported. If a sample was re-analyzed or re-extracted due to a required quality control corrective action and if both sets of data are reported, the Laboratory ID of the re-analysis or re-extraction is designated with an "R" or "RE", respectively. When multiple Batch Quality Control elements are reported (e.g. more than one LCS), the associated samples for each element are noted in the grey shaded header line of each data table. Any Laboratory Batch, Sample Specific % recovery or RPD value that is outside the listed Acceptance Criteria is bolded in the report. All specific QC information is also incorporated in the Data Usability format of our Data Merger tool where it can be reviewed along with any associated usability implications. Soil/sediments, solids and tissues are reported on a dry weight basis unless otherwise noted. Definitions of all data qualifiers and acronyms used in this report are provided in the Glossary located at the back of the report.

In reference to questions H (CAM) or 4 (RCP) when "NO" is checked, the performance criteria for CAM and RCP methods allow for some quality control failures to occur and still be within method compliance. In these instances the specific failure is not narrated but noted in the associated QC table. The information is also incorporated in the Data Usability format of our Data Merger tool where it can be reviewed along with any associated usability implications.

Please see the associated ADEx data file for a comparison of laboratory reporting limits that were achieved with the regulatory Numerical Standards requested on the Chain of Custody.

HOLD POLICY
For samples submitted on hold, Alpha's policy is to hold samples (with the exception of Air canisters) free of charge for 21 calendar days from the date the project is completed. After 21 calendar days, we will dispose of all samples submitted including those put on hold unless you have contacted your Client Service Representative and made arrangements for Alpha to continue to hold the samples. Air canisters will be disposed after 3 business days from the date the project is completed.

Please contact Client Services at 800-624-9220 with any questions.

Project Name: NBHS IRA
Project Number: 115058

Lab Number: L1519674
Report Date: 08/28/15

Case Narrative (continued)

Total PCBs in Air

Samples L1519674-01 and -02 along with it's associated QC were analyzed by GC/MS inorder to obtain surrogate and LCS recoveries. Total PCB results were obtained by the summation of the individual congeners detected over the reporting limit.

PCB Aroclors in Air

Sample L1519674-01 Samples were inadvertently spiked with PCB homolog surrogate and matrix spike therefore recoveries could not be determined for the Aroclor analysis and the results are submitted without recoveries. To determine extraction efficiency the samples were analyzed by MS to determine surrogate and spike recoveries.

Sample L1519674-01: The sample has elevated detection limits due to the dilution required by the elevated concentrations of target compounds in the sample.

I, the undersigned, attest under the pains and penalties of perjury that, to the best of my knowledge and belief and based upon my personal inquiry of those responsible for providing the information contained in this analytical report, such information is accurate and complete. This certificate of analysis is not complete unless this page accompanies any and all pages of this report.

Authorized Signature: Christopher J. Anderson

Title: Technical Director/Representative

Date: 08/28/15

ORGANICS

PCBS

Project Name: NBHS IRA
Project Number: 115058
Lab Number: L1519674
Report Date: 08/28/15

SAMPLE RESULTS

Lab ID:	L1519674-01	Date Collected:	08/14/15 13:05
Client ID:	VAPOR INLET	Date Received:	08/14/15
Sample Location:	NEW BEDFORD	Field Prep:	Not Specified
Matrix:	Air Media	Extraction Method:	EPA 3540C
Analytical Method:	105,8270D-SIM/680(M)	Extraction Date:	08/17/15 16:16
Analytical Date:	08/24/15 16:44		
Analyst:	JT		

Parameter	Result	Qualifier	Units	RL	MDL	Dilution Factor
PCB Congeners/Homologs (LowVol) - Mansfield Lab						
Total Pcb	1420		ng/cart	10.0	--	1

Surrogate	% Recovery	Qualifier	Acceptance Criteria
Cl3-BZ#19-C13	94		50-125
Cl8-BZ#202-C13	101		50-125

Project Name: NBHS IRA
Project Number: 115058
Lab Number: L1519674
Report Date: 08/28/15

SAMPLE RESULTS

Lab ID:	L1519674-02	Date Collected:	08/14/15 13:10
Client ID:	VAPOR OUTLET	Date Received:	08/14/15
Sample Location:	NEW BEDFORD	Field Prep:	Not Specified
Matrix:	Air Media	Extraction Method:	EPA 3540C
Analytical Method:	105,8270D-SIM/680(M)	Extraction Date:	08/17/15 16:16
Analytical Date:	08/24/15 17:59		
Analyst:	JT		

Parameter	Result	Qualifier	Units	RL	MDL	Dilution Factor
PCB Congeners/Homologs (LowVol) - Mansfield Lab						
Total Pcb	ND		ng/cart	10.0	--	1

Surrogate	% Recovery	Qualifier	Acceptance Criteria
Cl3-BZ#19-C13	78		50-125
Cl8-BZ#202-C13	84		50-125

Project Name: NBHS IRA
Project Number: 115058

Lab Number: L1519674
Report Date: 08/28/15

Method Blank Analysis
Batch Quality Control

Analytical Method: 105,8270D-SIM/680(M)
Analytical Date: 08/24/15 14:16
Analyst: JT

Extraction Method: EPA 3540C
Extraction Date: 08/17/15 16:16

Parameter	Result	Qualifier	Units	RL	MDL
PCB Congeners/Homologs (LowVol) - Mansfield Lab for sample(s): 01-02 Batch: WG812844-1					
Total Pcb	ND		ng/cart	10.0	--

Surrogate	%Recovery	Qualifier	Acceptance Criteria
Cl3-BZ#19-C13	80		50-125
Cl8-BZ#202-C13	88		50-125

Lab Control Sample Analysis
Batch Quality Control

Project Name: NBHS IRA
Project Number: 115058
Lab Number: L1519674
Report Date: 08/28/15

Parameter	LCS %Recovery	Qual	LCSD %Recovery	Qual	%Recovery Limits	RPD	Qual	RPD Limits
PCB Congeners/Homologs (LowVol) - Mansfield Lab Associated sample(s): 01-02 Batch: WG812844-2								
Cl1-BZ#1	86		-		40-140	-		30
CL1-BZ#3	86		-		40-140	-		30
Cl2-BZ#4/#10	89		-		40-140	-		30
Cl2-BZ#8	85		-		40-140	-		30
Cl3-BZ#19	81		-		40-140	-		30
Cl3-BZ#18	83		-		40-140	-		30
Cl2-BZ#15	84		-		40-140	-		30
Cl4-BZ#54	84		-		40-140	-		30
Cl3-BZ#29	77		-		40-140	-		30
Cl4-BZ#50	80		-		40-140	-		30
Cl3-BZ#-31	73		-		40-140	-		30
Cl3-BZ#28	77		-		40-140	-		30
Cl4-BZ#45	79		-		40-140	-		30
Cl4-BZ#52	87		-		40-140	-		30
Cl4-BZ#49	82		-		40-140	-		30
Cl5-BZ#104	76		-		40-140	-		30
Cl4-BZ#47	73		-		40-140	-		30
Cl4-BZ#44	79		-		40-140	-		30
Cl3-BZ#37	88		-		40-140	-		30
Cl5-BZ#121/#95/#88	85		-		40-140	-		30
Cl4-BZ#74	79		-		40-140	-		30

Lab Control Sample Analysis
Batch Quality Control

Project Name: NBHS IRA
Project Number: 115058

Lab Number: L1519674
Report Date: 08/28/15

Parameter	LCS %Recovery	Qual	LCSD %Recovery	Qual	%Recovery Limits	RPD	Qual	RPD Limits
PCB Congeners/Homologs (LowVol) - Mansfield Lab Associated sample(s): 01-02 Batch: WG812844-2								
Cl6-BZ#155	84		-		40-140	-		30
Cl4-BZ#70	78		-		40-140	-		30
Cl4-BZ#66	78		-		40-140	-		30
Cl5-BZ#101/#90	82		-		40-140	-		30
Cl4-BZ#56	80		-		40-140	-		30
Cl5-BZ#99	78		-		40-140	-		30
Cl5-BZ#87/#111	88		-		40-140	-		30
Cl6-BZ#154	82		-		40-140	-		30
Cl5-BZ#110	83		-		40-140	-		30
Cl4-BZ#81	80		-		40-140	-		30
Cl6-BZ#151	82		-		40-140	-		30
Cl6-BZ#147/#149	79		-		40-140	-		30
Cl4-BZ#77	88		-		40-140	-		30
Cl5-BZ#107/#123	85		-		40-140	-		30
Cl7-BZ#188	87		-		40-140	-		30
Cl5-BZ#118	85		-		40-140	-		30
Cl6-BZ#146	86		-		40-140	-		30
Cl5-BZ#114	83		-		40-140	-		30
Cl6-BZ#153	96		-		40-140	-		30
Cl5-BZ#105	84		-		40-140	-		30
Cl6-BZ#138	82		-		40-140	-		30

Lab Control Sample Analysis
Batch Quality Control

Project Name: NBHS IRA
Project Number: 115058

Lab Number: L1519674
Report Date: 08/28/15

Parameter	LCS %Recovery	Qual	LCSD %Recovery	Qual	%Recovery Limits	RPD	Qual	RPD Limits
PCB Congeners/Homologs (LowVol) - Mansfield Lab Associated sample(s): 01-02 Batch: WG812844-2								
Cl6-BZ#129/#158	91		-		40-140	-		30
Cl7-BZ#187	83		-		40-140	-		30
Cl7-BZ#183	81		-		40-140	-		30
Cl5-BZ#126	85		-		40-140	-		30
Cl7-BZ#174	80		-		40-140	-		30
Cl6-BZ#128	84		-		40-140	-		30
Cl6-BZ#167	86		-		40-140	-		30
Cl8-BZ#202	83		-		40-140	-		30
Cl7-BZ#177	87		-		40-140	-		30
Cl8-BZ#204/#200-CAL	83		-		40-140	-		30
Cl6-BZ#156	87		-		40-140	-		30
Cl6-BZ#157	83		-		40-140	-		30
Cl7-BZ#180	83		-		40-140	-		30
Cl8-BZ#201	88		-		40-140	-		30
Cl7-BZ#170	87		-		40-140	-		30
Cl6-BZ#169	83		-		40-140	-		30
Cl9-BZ#208	79		-		40-140	-		30
Cl7-BZ#189	79		-		40-140	-		30
Cl8-BZ#195	82		-		40-140	-		30
Cl8-BZ#194	76		-		40-140	-		30
Cl8-BZ#205	80		-		40-140	-		30

Lab Control Sample Analysis
Batch Quality Control

Project Name: NBHS IRA
Project Number: 115058
Lab Number: L1519674
Report Date: 08/28/15

Parameter	LCS %Recovery	Qual	LCSD %Recovery	Qual	%Recovery Limits	RPD	Qual	RPD Limits
PCB Congeners/Homologs (LowVol) - Mansfield Lab Associated sample(s): 01-02 Batch: WG812844-2								
Cl9-BZ#206	80		-		40-140	-		30
Cl10-BZ#209	78		-		40-140	-		30

Surrogate	LCS %Recovery	Qual	LCSD %Recovery	Qual	Acceptance Criteria
Cl3-BZ#19-C13	81				50-125
Cl8-BZ#202-C13	86				50-125

AIR

Project Name: NBHS IRA
Project Number: 115058

Lab Number: L1519674
Report Date: 08/28/15

SAMPLE RESULTS

Lab ID: L1519674-01
Client ID: VAPOR INLET
Sample Location: NEW BEDFORD
Matrix: Air Media
Analytical Method: 48,TO-10A
Analytical Date: 08/20/15 18:56
Analyst: SF

Date Collected: 08/14/15 13:05
Date Received: 08/14/15
Field Prep: Not Specified
Extraction Method: EPA 3540C
Extraction Date: 08/17/15 16:16

Parameter	Result	Qualifier	Units	RL	MDL	Dilution Factor	Column
PCB Aroclors in Air - Mansfield Lab							
Aroclor 1016	ND		ng/cart	30.0	--	1	A
Aroclor 1221	ND		ng/cart	100	--	1	A
Aroclor 1232	ND		ng/cart	30.0	--	1	A
Aroclor 1242	ND		ng/cart	20.0	--	1	A
Aroclor 1248	1590	E	ng/cart	20.0	--	1	B
Aroclor 1254	ND		ng/cart	20.0	--	1	A
Aroclor 1260	ND		ng/cart	20.0	--	1	A
Aroclor 1262	ND		ng/cart	20.0	--	1	A
Aroclor 1268	ND		ng/cart	20.0	--	1	A

Project Name: NBHS IRA

Project Number: 115058

Lab Number: L1519674

Report Date: 08/28/15

SAMPLE RESULTS

Lab ID: L1519674-01 D
Client ID: VAPOR INLET
Sample Location: NEW BEDFORD
Matrix: Air Media
Analytical Method: 48,TO-10A
Analytical Date: 08/21/15 16:45
Analyst: SF

Date Collected: 08/14/15 13:05
Date Received: 08/14/15
Field Prep: Not Specified
Extraction Method: EPA 3540C
Extraction Date: 08/17/15 16:16

Parameter	Result	Qualifier	Units	RL	MDL	Dilution Factor	Column
PCB Aroclors in Air - Mansfield Lab							
Aroclor 1248	1720		ng/cart	40.0	--	2	B

Project Name: NBHS IRA

Project Number: 115058

Lab Number: L1519674

Report Date: 08/28/15

SAMPLE RESULTS

Lab ID: L1519674-02
Client ID: VAPOR OUTLET
Sample Location: NEW BEDFORD
Matrix: Air Media
Analytical Method: 48,TO-10A
Analytical Date: 08/20/15 19:27
Analyst: SF

Date Collected: 08/14/15 13:10
Date Received: 08/14/15
Field Prep: Not Specified
Extraction Method: EPA 3540C
Extraction Date: 08/17/15 16:16

Parameter	Result	Qualifier	Units	RL	MDL	Dilution Factor	Column
PCB Aroclors in Air - Mansfield Lab							
Aroclor 1016	ND		ng/cart	30.0	--	1	A
Aroclor 1221	ND		ng/cart	100	--	1	A
Aroclor 1232	ND		ng/cart	30.0	--	1	A
Aroclor 1242	ND		ng/cart	20.0	--	1	A
Aroclor 1248	ND		ng/cart	20.0	--	1	A
Aroclor 1254	ND		ng/cart	20.0	--	1	A
Aroclor 1260	ND		ng/cart	20.0	--	1	A
Aroclor 1262	ND		ng/cart	20.0	--	1	A
Aroclor 1268	ND		ng/cart	20.0	--	1	A

Project Name: NBHS IRA
Project Number: 115058

Lab Number: L1519674
Report Date: 08/28/15

Method Blank Analysis
Batch Quality Control

Analytical Method: 48,TO-10A
Analytical Date: 08/20/15 18:26
Analyst: SF

Extraction Method: EPA 3540C
Extraction Date: 08/17/15 16:16

Parameter	Result	Qualifier	Units	RL	MDL	Column
PCB Aroclors in Air - Mansfield Lab for sample(s): 01-02 Batch: WG813833-1						
Aroclor 1016	ND		ng/cart	30.0	--	A
Aroclor 1221	ND		ng/cart	100	--	A
Aroclor 1232	ND		ng/cart	30.0	--	A
Aroclor 1242	ND		ng/cart	20.0	--	A
Aroclor 1248	ND		ng/cart	20.0	--	A
Aroclor 1254	ND		ng/cart	20.0	--	A
Aroclor 1260	ND		ng/cart	20.0	--	A
Aroclor 1262	ND		ng/cart	20.0	--	A
Aroclor 1268	ND		ng/cart	20.0	--	A

Surrogate	%Recovery	Qualifier	Acceptance Criteria	Column

Project Name: NBHS IRA
Project Number: 115058

Lab Number: L1519674
Report Date: 08/28/15

Sample Receipt and Container Information

Were project specific reporting limits specified? YES

Reagent H2O Preserved Vials Frozen on: NA

Cooler Information Custody Seal

Cooler	
A	Absent

Container Information

Container ID	Container Type	Cooler	pH	Temp deg C	Pres	Seal	Analysis(*)
L1519674-01A	PUF Air Cartridge (PCB) - Low	A	N/A	4.5	Y	Absent	A2-PCB209-C/H-8270L(7),A2-TO10-AROCLOR(7)
L1519674-02A	PUF Air Cartridge (PCB) - Low	A	N/A	4.5	Y	Absent	A2-PCB209-C/H-8270L(7),A2-TO10-AROCLOR(7)

*Values in parentheses indicate holding time in days

Project Name: NBHS IRA **Lab Number:** L1519674

Project Number: 115058 **Report Date:** 08/28/15

GLOSSARY

Acronyms

EDL - Estimated Detection Limit: This value represents the level to which target analyte concentrations are reported as estimated values, when those target analyte concentrations are quantified below the reporting limit (RL). The EDL includes any adjustments from dilutions, concentrations or moisture content, where applicable. The use of EDLs is specific to the analysis of PAHs using Solid-Phase Microextraction (SPME).

EPA - Environmental Protection Agency.

LCS - Laboratory Control Sample: A sample matrix, free from the analytes of interest, spiked with verified known amounts of analytes or a material containing known and verified amounts of analytes.

LCSD - Laboratory Control Sample Duplicate: Refer to LCS.

LFB - Laboratory Fortified Blank: A sample matrix, free from the analytes of interest, spiked with verified known amounts of analytes or a material containing known and verified amounts of analytes.

MDL - Method Detection Limit: This value represents the level to which target analyte concentrations are reported as estimated values, when those target analyte concentrations are quantified below the reporting limit (RL). The MDL includes any adjustments from dilutions, concentrations or moisture content, where applicable.

MS - Matrix Spike Sample: A sample prepared by adding a known mass of target analyte to a specified amount of matrix sample for which an independent estimate of target analyte concentration is available.

MSD - Matrix Spike Sample Duplicate: Refer to MS.

NA - Not Applicable.

NC - Not Calculated: Term is utilized when one or more of the results utilized in the calculation are non-detect at the parameter's reporting unit.

NI - Not Ignitable.

NP - Non-Plastic: Term is utilized for the analysis of Atterberg Limits in soil.

RL - Reporting Limit: The value at which an instrument can accurately measure an analyte at a specific concentration. The RL includes any adjustments from dilutions, concentrations or moisture content, where applicable.

RPD - Relative Percent Difference: The results from matrix and/or matrix spike duplicates are primarily designed to assess the precision of analytical results in a given matrix and are expressed as relative percent difference (RPD). Values which are less than five times the reporting limit for any individual parameter are evaluated by utilizing the absolute difference between the values; although the RPD value will be provided in the report.

SRM - Standard Reference Material: A reference sample of a known or certified value that is of the same or similar matrix as the associated field samples.

TIC - Tentatively Identified Compound: A compound that has been identified to be present and is not part of the target compound list (TCL) for the method and/or program. All TICs are qualitatively identified and reported as estimated concentrations.

Footnotes

1 - The reference for this analyte should be considered modified since this analyte is absent from the target analyte list of the original method.

Terms

Total: With respect to Organic analyses, a 'Total' result is defined as the summation of results for individual isomers or Aroclors. If a 'Total' result is requested, the results of its individual components will also be reported. This is applicable to 'Total' results for methods 8260, 8081 and 8082.

Analytical Method: Both the document from which the method originates and the analytical reference method. (Example: EPA 8260B is shown as 1,8260B.) The codes for the reference method documents are provided in the References section of the Addendum.

Data Qualifiers

A - Spectra identified as "Aldol Condensation Product".

B - The analyte was detected above the reporting limit in the associated method blank. Flag only applies to associated field samples that have detectable concentrations of the analyte at less than ten times (10x) the concentration found in the blank. For MCP-related projects, flag only applies to associated field samples that have detectable concentrations of the analyte at less than ten times (10x) the concentration found in the blank. For DOD-related projects, flag only applies to associated field samples that have detectable concentrations of the analyte at less than ten times (10x) the concentration found in the blank AND the analyte was detected above one-half the reporting limit (or above the reporting limit for common lab contaminants) in the associated method blank. For NJ-Air-related projects, flag only applies to associated field samples that have detectable concentrations of the analyte above the reporting limit. For NJ-related projects (excluding Air), flag only applies to associated field samples that have detectable concentrations of the analyte, which was detected above the reporting limit in the associated method blank or above five times the reporting limit for common lab contaminants (Phthalates, Acetone, Methylene Chloride, 2-Butanone).

C - Co-elution: The target analyte co-elutes with a known lab standard (i.e. surrogate, internal standards, etc.) for co-extracted analyses.

Report Format: Data Usability Report

Project Name: NBHS IRA **Lab Number:** L1519674

Project Number: 115058 **Report Date:** 08/28/15

Data Qualifiers

D - Concentration of analyte was quantified from diluted analysis. Flag only applies to field samples that have detectable concentrations of the analyte.

E - Concentration of analyte exceeds the range of the calibration curve and/or linear range of the instrument.

G - The concentration may be biased high due to matrix interferences (i.e, co-elution) with non-target compound(s). The result should be considered estimated.

H - The analysis of pH was performed beyond the regulatory-required holding time of 15 minutes from the time of sample collection.

I - The lower value for the two columns has been reported due to obvious interference.

M - Reporting Limit (RL) exceeds the MCP CAM Reporting Limit for this analyte.

NJ - Presumptive evidence of compound. This represents an estimated concentration for Tentatively Identified Compounds (TICs), where the identification is based on a mass spectral library search.

P - The RPD between the results for the two columns exceeds the method-specified criteria.

Q - The quality control sample exceeds the associated acceptance criteria. For DOD-related projects, LCS and/or Continuing Calibration Standard exceedences are also qualified on all associated sample results. Note: This flag is not applicable for matrix spike recoveries when the sample concentration is greater than 4x the spike added or for batch duplicate RPD when the sample concentrations are less than 5x the RL. (Metals only.)

R - Analytical results are from sample re-analysis.

RE - Analytical results are from sample re-extraction.

S - Analytical results are from modified screening analysis.

J - Estimated value. This represents an estimated concentration for Tentatively Identified Compounds (TICs).

ND - Not detected at the reporting limit (RL) for the sample.

Report Format: Data Usability Report

Project Name: NBHS IRA
Project Number: 115058
Lab Number: L1519674
Report Date: 08/28/15

REFERENCES

48 Compendium of Methods for the Determination of Toxic Organic Compounds in Ambient Air. Second Edition. EPA/625/R-96/010b, January 1999.

105 Test Methods for Evaluating Solid Waste: Physical/Chemical Methods. EPA SW-846. Third Edition. Updates I - IIIA, 1997 in conjunction with NOAA Technical Memorandum NMFS-NWFSC-59: Extraction, Cleanup and GC/MS Analysis of Sediments and Tissues for Organic Contaminants, March 2004 and the Determination of Pesticides and PCBs in Water and Oil/Sediment by GC/MS: Method 680, EPA 01A0005295, November 1985.

LIMITATION OF LIABILITIES

Alpha Analytical performs services with reasonable care and diligence normal to the analytical testing laboratory industry. In the event of an error, the sole and exclusive responsibility of Alpha Analytical shall be to re-perform the work at it's own expense. In no event shall Alpha Analytical be held liable for any incidental, consequential or special damages, including but not limited to, damages in any way connected with the use of, interpretation of, information or analysis provided by Alpha Analytical.

We strongly urge our clients to comply with EPA protocol regarding sample volume, preservation, cooling, containers, sampling procedures, holding time and splitting of samples in the field.

Certification Information

Last revised December 16, 2014

The following analytes are not included in our NELAP Scope of Accreditation:

Westborough Facility
EPA 524.2: Acetone, 2-Butanone (Methyl ethyl ketone (MEK)), Tert-butyl alcohol, 2-Hexanone, Tetrahydrofuran, 1,3,5-Trichlorobenzene, 4-Methyl-2-pentanone (MIBK), Carbon disulfide, Diethyl ether.
EPA 8260C: 1,2,4,5-Tetramethylbenzene, 4-Ethyltoluene, Iodomethane (methyl iodide), Methyl methacrylate, Azobenzene.
EPA 8270D: 1-Methylnaphthalene, Dimethylnaphthalene,1,4-Diphenylhydrazine.
EPA 625: 4-Chloroaniline, 4-Methylphenol.
SM4500: Soil: Total Phosphorus, TKN, NO2, NO3.
EPA 9071: Total Petroleum Hydrocarbons, Oil & Grease.

Mansfield Facility
EPA 8270D: Biphenyl.
EPA 2540D: TSS
EPA TO-15: Halothane, 2,4,4-Trimethyl-2-pentene, 2,4,4-Trimethyl-1-pentene, Thiophene, 2-Methylthiophene, 3-Methylthiophene, 2-Ethylthiophene, 1,2,3-Trimethylbenzene, Indan, Indene, 1,2,4,5-Tetramethylbenzene, Benzothiophene, 1-Methylnaphthalene.

The following analytes are included in our Massachusetts DEP Scope of Accreditation, Westborough Facility:

Drinking Water
EPA 200.8: Sb,As,Ba,Be,Cd,Cr,Cu,Pb,Ni,Se,Tl; **EPA 200.7**: Ba,Be,Ca,Cd,Cr,Cu,Na; **EPA 245.1:** Mercury;
EPA 300.0: Nitrate-N, Fluoride, Sulfate; **EPA 353.2**: Nitrate-N, Nitrite-N; **SM4500NO3-F**: Nitrate-N, Nitrite-N; **SM4500F-C, SM4500CN-CE, EPA 180.1, SM2130B, SM4500Cl-D, SM2320B, SM2540C, SM4500H-B**
EPA 332: Perchlorate.
Microbiology: **SM9215B; SM9223-P/A, SM9223B-Colilert-QT, Enterolert-QT.**

Non-Potable Water
EPA 200.8: Al,Sb,As,Be,Cd,Cr,Cu,Pb,Mn,Ni,Se,Ag,Tl,Zn;
EPA 200.7: Al,Sb,As,Be,Cd,Ca,Cr,Co,Cu,Fe,Pb,Mg,Mn,Mo,Ni,K,Se,Ag,Na,Sr,Ti,Tl,V,Zn;
EPA 245.1, SM4500H,B, EPA 120.1, SM2510B, SM2540C, SM2340B, SM2320B, SM4500CL-E, SM4500F-BC, SM426C, SM4500NH3-BH, **EPA 350.1**: Ammonia-N, **LACHAT 10-107-06-1-B**: Ammonia-N, **SM4500NO3-F,**
EPA 353.2: Nitrate-N**, SM4500NH3-BC-NES, EPA 351.1, SM4500P-E, SM4500P-B, E, SM5220D, EPA 410.4, SM5210B, SM5310C, SM4500CL-D, EPA 1664, SM14 510AC, EPA 420.1, SM4500-CN-CE, SM2540D.**
EPA 624: Volatile Halocarbons & Aromatics,
EPA 608: Chlordane, Toxaphene, Aldrin, alpha-BHC, beta-BHC, gamma-BHC, delta-BHC, Dieldrin, DDD, DDE, DDT, Endosulfan I, Endosulfan II, Endosulfan sulfate, Endrin, Endrin Aldehyde, Heptachlor, Heptachlor Epoxide, PCBs
EPA 625: SVOC (Acid/Base/Neutral Extractables), **EPA 600/4-81-045**: PCB-Oil.
Microbiology: **SM9223B-Colilert-QT; Enterolert-QT, SM9222D-MF**.

For a complete listing of analytes and methods, please contact your Alpha Project Manager.

AIR ANALYSIS - SORBENT MEDIA
CHAIN OF CUSTODY

Page ___ of ___

Date Rec'd in Lab: 8/14/15

ALPHA Job #: L1519674

Westborough, MA TEL: 508-898-9220 FAX: 508-822-3288
Mansfield, MA TEL: 508-822-9300 508-822-3288

Client Information
- Client: TRC
- Address: 650 SUFFOLK ST
- LOWELL MA
- Phone: 978-970-5600
- Fax:
- Email: PSULLIVAN@TRCSOLUTIONS.COM

Project Information
- Project Name: NBHS IRA
- Project Location: NEW BEDFORD
- Project #: 113058
- (Use Project name as Project #) ☐
- Project Manager: DAVID SULLIVAN
- ALPHA Quote #:

Turn-Around Time
- Standard ☑ Due Date: 8/21
- Rush (only if pre approved) ☐ Time:

Report Information - Data Deliverables
- ☐ FAX
- ☑ ADEx
- Criteria Checker:
- Other Formats:
- ☐ EMAIL
- ☐ Add'l Deliverables
- Report to: (if different than Project Manager)

Billing Information
- ☐ Same as Client Info
- PO # C115058

Regulatory Requirements/Report Limits

State/Fed	Program	Criteria

These samples have been previously analyzed by Alpha ☐

Other Project Specific Requirements/ Comments/Detection Limits

For PCBs, selection is REQUIRED:
- ☐ Congeners
- ☐ Homologs
- ☑ Aroclors (Low Vol only)

ANALYSIS

NOTE: For metals, please specify elements of interest and media type.
- ☐ PM-10
- ☐ TSP
- ☐ MCE

All Columns Below Must Be Filled Out

ALPHA Lab ID (Lab Use Only)	Sample ID	Collection Date	Start Time	End Time	Flow Rate (L/min)	Total Volume (L)	Sample Matrix*	Sampler's Initials	Media ID# (1)	TO-13A	PCBs (High Vol)	PCBs (Low Vol)	TO-11A	Hg via NIOSH 6009 Mod.	Metals	TO-17		Sample Comments (i.e. PID)
L9674-01	VAPOR INLET	8/14/15	9:05	13:05	5	1200	SV	JF	N013			✓						
	VAPOR OUTLET	8/14/15	9:10	13:10	5	1200	O	JF	LP328			✓						
Media Type										P	P	P	D	T	F	T		

*** SAMPLE MATRIX CODES**
- AA = Ambient Air (Indoor/Outdoor)
- SV = Soil Vapor/Landfill Gas/SVE
- Other = Please Specify

(1) Required for PUF cartridges, PM-10 and TSP filters and TO-17 sorbent tubes.

Media Code
- D = DNPH Cartridge
- F = Filter
- P = PUF Cartridge
- T = Sorbent Tube
- O = Other

Relinquished By:	Date/Time	Received By:	Date/Time
[signature]	8/14/15 15:35	[signature]	8/14/15 15:35

Please print clearly, legibly and completely. Samples can not be logged in and turnaround time clock will not start until any ambiguities are resolved. BY EXECUTING THIS COC, THE CLIENT HAS READ AND AGREES TO BE BOUND BY ALPHA'S TERMS & CONDITIONS. (See reverse side.)

Form No: 101-13 (rev 01-OCT-2013)

Sample Results

Lab ID:	L1519674-01	Sampling Time:	4 hrs
		Sampling Rate:	5 L/min
Matrix:	Air Media	Total Flow:	1200 L

PCB Aroclors in Air

	ng/cart				ug/m3				Dilution	
Parameter	Result	Units	RL	MDL	Result	Units	RL	MDL	Factor	Column
Aroclor 1016	0	ng/cart	30	-	0	ug/m3	0.0250	-	1	A
Aroclor 1221	0	ng/cart	100	-	0	ug/m3	0.0833	-	1	A
Aroclor 1232	0	ng/cart	30	-	0	ug/m3	0.0250	-	1	A
Aroclor 1242	0	ng/cart	100	-	0	ug/m3	0.0833	-	1	A
Aroclor 1248	1720	ng/cart	20	-	1.43	ug/m3	0.0167	-	2	B
Aroclor 1254	0	ng/cart	20	-	0	ug/m3	0.0167	-	1	A
Aroclor 1260	0	ng/cart	20	-	0	ug/m3	0.0167	-	1	A
Aroclor 1262	0	ng/cart	20	-	0	ug/m3	0.0167	-	1	A
Aroclor 1268	0	ng/cart	20	-	0	ug/m3	0.0167	-	1	A

Sample Results

Lab ID:	L1519674-02	Sampling Time:	4.00 hrs
		Sampling Rate:	5 L/min
Matrix:	Air Media	Total Flow:	1200 L

PCB Aroclors in Air

	ng/cart				ug/m3				Dilution	
Parameter	Result	Units	RL	MDL	Result	Units	RL	MDL	Factor	Column
Aroclor 1016	0	ng/cart	30	-	ND	ug/m3	0.0250	-	1	A
Aroclor 1221	0	ng/cart	100	-	ND	ug/m3	0.0833	-	1	A
Aroclor 1232	0	ng/cart	30	-	ND	ug/m3	0.0250	-	1	A
Aroclor 1242	0	ng/cart	20	-	ND	ug/m3	0.0167	-	1	A
Aroclor 1248	0	ng/cart	20	-	ND	ug/m3	0.0167	-	1	A
Aroclor 1254	0	ng/cart	20	-	ND	ug/m3	0.0167	-	1	A
Aroclor 1260	0	ng/cart	20	-	ND	ug/m3	0.0167	-	1	A
Aroclor 1262	0	ng/cart	20	-	ND	ug/m3	0.0167	-	1	A
Aroclor 1268	0	ng/cart	20	-	ND	ug/m3	0.0167	-	1	A

ANALYTICAL REPORT

Lab Number:	L1522608
Client:	TRC Environmental Consultants Wannalancit Mills 650 Suffolk Street Lowell, MA 01854
ATTN:	David Sullivan
Phone:	(978) 656-3565
Project Name:	NBHS IRA O&M
Project Number:	115058
Report Date:	09/21/15

The original project report/data package is held by Alpha Analytical. This report/data package is paginated and should be reproduced only in its entirety. Alpha Analytical holds no responsibility for results and/or data that are not consistent with the original.

Certifications & Approvals: NY (11627), CT (PH-0141), NH (2206), NJ NELAP (MA015), RI (LAO00299), ME (MA00030), PA (68-02089), VA (460194), LA NELAP (03090), FL (E87814), TX (T104704419), WA (C954), USFWS (Permit #LE2069641), USDA (Permit #P330-11-00109), US Army Corps of Engineers.

320 Forbes Boulevard, Mansfield, MA 02048-1806
508-822-9300 (Fax) 508-822-3288 800-624-9220 - www.alphalab.com

Project Name: NBHS IRA O&M
Project Number: 115058

Lab Number: L1522608
Report Date: 09/21/15

Alpha Sample ID	Client ID	Matrix	Sample Location	Collection Date/Time	Receive Date
L1522608-01	VAPOR INLET	SOIL_VAPOR	NEW BEDFORD, MA	09/14/15 13:58	09/14/15
L1522608-02	VAPOR OUTLET	SOIL_VAPOR	NEW BEDFORD, MA	09/14/15 14:00	09/14/15

Project Name: NBHS IRA O&M **Lab Number:** L1522608

Project Number: 115058 **Report Date:** 09/21/15

MADEP MCP Response Action Analytical Report Certification

This form provides certifications for all samples performed by MCP methods. Please refer to the Sample Results and Container Information sections of this report for specification of MCP methods used for each analysis. The following questions pertain only to MCP Analytical Methods.

An affirmative response to questions A through F is required for "Presumptive Certainty" status		
A	Were all samples received in a condition consistent with those described on the Chain-of-Custody, properly preserved (including temperature) in the field or laboratory, and prepared/analyzed within method holding times?	YES
B	Were the analytical method(s) and all associated QC requirements specified in the selected CAM protocol(s) followed?	YES
C	Were all required corrective actions and analytical response actions specified in the selected CAM protocol(s) implemented for all identified performance standard non-conformances?	YES
D	Does the laboratory report comply with all the reporting requirements specified in CAM VII A, "Quality Assurance and Quality Control Guidelines for the Acquisition and Reporting of Analytical Data?"	YES
E a.	VPH, EPH, and APH Methods only: Was each method conducted without significant modification(s)? (Refer to the individual method(s) for a list of significant modifications).	N/A
E b.	APH and TO-15 Methods only: Was the complete analyte list reported for each method?	YES
F	Were all applicable CAM protocol QC and performance standard non-conformances identified and evaluated in a laboratory narrative (including all "No" responses to Questions A through E)?	YES

A response to questions G, H and I is required for "Presumptive Certainty" status		
G	Were the reporting limits at or below all CAM reporting limits specified in the selected CAM protocol(s)?	NO
H	Were all QC performance standards specified in the CAM protocol(s) achieved?	YES
I	Were results reported for the complete analyte list specified in the selected CAM protocol(s)?	YES

For any questions answered "No", please refer to the case narrative section on the following page(s).

Please note that sample matrix information is located in the Sample Results section of this report.

Project Name: NBHS IRA O&M
Project Number: 115058
Lab Number: L1522608
Report Date: 09/21/15

Case Narrative

The samples were received in accordance with the Chain of Custody and no significant deviations were encountered during the preparation or analysis unless otherwise noted. Sample Receipt, Container Information, and the Chain of Custody are located at the back of the report.

Results contained within this report relate only to the samples submitted under this Alpha Lab Number and meet all of the requirements of NELAC, for all NELAC accredited parameters. The data presented in this report is organized by parameter (i.e. VOC, SVOC, etc.). Sample specific Quality Control data (i.e. Surrogate Spike Recovery) is reported at the end of the target analyte list for each individual sample, followed by the Laboratory Batch Quality Control at the end of each parameter. Tentatively Identified Compounds (TICs), if requested, are reported for compounds identified to be present and are not part of the method/program Target Compound List, even if only a subset of the TCL are being reported. If a sample was re-analyzed or re-extracted due to a required quality control corrective action and if both sets of data are reported, the Laboratory ID of the re-analysis or re-extraction is designated with an "R" or "RE", respectively. When multiple Batch Quality Control elements are reported (e.g. more than one LCS), the associated samples for each element are noted in the grey shaded header line of each data table. Any Laboratory Batch, Sample Specific % recovery or RPD value that is outside the listed Acceptance Criteria is bolded in the report. All specific QC information is also incorporated in the Data Usability format of our Data Merger tool where it can be reviewed along with any associated usability implications. Soil/sediments, solids and tissues are reported on a dry weight basis unless otherwise noted. Definitions of all data qualifiers and acronyms used in this report are provided in the Glossary located at the back of the report.

In reference to questions H (CAM) or 4 (RCP) when "NO" is checked, the performance criteria for CAM and RCP methods allow for some quality control failures to occur and still be within method compliance. In these instances the specific failure is not narrated but noted in the associated QC table. The information is also incorporated in the Data Usability format of our Data Merger tool where it can be reviewed along with any associated usability implications.

Please see the associated ADEx data file for a comparison of laboratory reporting limits that were achieved with the regulatory Numerical Standards requested on the Chain of Custody.

HOLD POLICY
For samples submitted on hold, Alpha's policy is to hold samples (with the exception of Air canisters) free of charge for 21 calendar days from the date the project is completed. After 21 calendar days, we will dispose of all samples submitted including those put on hold unless you have contacted your Client Service Representative and made arrangements for Alpha to continue to hold the samples. Air canisters will be disposed after 3 business days from the date the project is completed.

Please contact Client Services at 800-624-9220 with any questions.

Project Name: NBHS IRA O&M **Lab Number:** L1522608
Project Number: 115058 **Report Date:** 09/21/15

Case Narrative (continued)

MCP Related Narratives

Canisters were released from the laboratory on September 14, 2015. The canister certification data is provided as an addendum.

MCP Volatile Organics in Air

In reference to question G:

One or more of the target analytes did not achieve the requested CAM reporting limits.

Sample L1522608-02 and WG822828-5 Duplicate: The presence of Acetone could not be determined in this sample due to a non-target compound interfering with the identification and quantification of this compound.

I, the undersigned, attest under the pains and penalties of perjury that, to the best of my knowledge and belief and based upon my personal inquiry of those responsible for providing the information contained in this analytical report, such information is accurate and complete. This certificate of analysis is not complete unless this page accompanies any and all pages of this report.

Authorized Signature: Christopher J. Anderson

Title: Technical Director/Representative Date: 09/21/15

AIR

Project Name: NBHS IRA O&M
Project Number: 115058
Lab Number: L1522608
Report Date: 09/21/15

SAMPLE RESULTS

Lab ID: L1522608-01
Client ID: VAPOR INLET
Sample Location: NEW BEDFORD, MA
Matrix: Soil_Vapor
Anaytical Method: 101,TO-15
Analytical Date: 09/18/15 23:34
Analyst: RY

Date Collected: 09/14/15 13:58
Date Received: 09/14/15
Field Prep: Not Specified

Parameter	ppbV Results	ppbV RL	ppbV MDL	ug/m3 Results	ug/m3 RL	ug/m3 MDL	Qualifier	Dilution Factor
MCP Volatile Organics in Air - Mansfield Lab								
Vinyl chloride	2.12	0.200	--	5.42	0.511	--		1
Bromomethane	ND	0.200	--	ND	0.777	--		1
Acetone	2.70	1.00	--	6.41	2.38	--		1
1,1-Dichloroethene	ND	0.200	--	ND	0.793	--		1
Methylene chloride	ND	0.500	--	ND	1.74	--		1
trans-1,2-Dichloroethene	0.635	0.200	--	2.52	0.793	--		1
1,1-Dichloroethane	ND	0.200	--	ND	0.809	--		1
Methyl tert butyl ether	ND	0.200	--	ND	0.721	--		1
2-Butanone	ND	0.500	--	ND	1.47	--		1
cis-1,2-Dichloroethene	0.928	0.200	--	3.68	0.793	--		1
Chloroform	0.369	0.200	--	1.80	0.977	--		1
1,2-Dichloroethane	ND	0.200	--	ND	0.809	--		1
1,1,1-Trichloroethane	ND	0.200	--	ND	1.09	--		1
Benzene	ND	0.200	--	ND	0.639	--		1
Carbon tetrachloride	ND	0.200	--	ND	1.26	--		1
1,2-Dichloropropane	ND	0.200	--	ND	0.924	--		1
Bromodichloromethane	ND	0.200	--	ND	1.34	--		1
1,4-Dioxane	ND	0.200	--	ND	0.721	--		1
Trichloroethene	0.658	0.200	--	3.54	1.07	--		1
cis-1,3-Dichloropropene	ND	0.200	--	ND	0.908	--		1
4-Methyl-2-pentanone	ND	0.500	--	ND	2.05	--		1
trans-1,3-Dichloropropene	ND	0.200	--	ND	0.908	--		1
1,1,2-Trichloroethane	ND	0.200	--	ND	1.09	--		1
Toluene	0.620	0.200	--	2.34	0.754	--		1

Project Name: NBHS IRA O&M
Project Number: 115058
Lab Number: L1522608
Report Date: 09/21/15

SAMPLE RESULTS

Lab ID: L1522608-01
Client ID: VAPOR INLET
Sample Location: NEW BEDFORD, MA
Date Collected: 09/14/15 13:58
Date Received: 09/14/15
Field Prep: Not Specified

Parameter	ppbV Results	ppbV RL	ppbV MDL	ug/m3 Results	ug/m3 RL	ug/m3 MDL	Qualifier	Dilution Factor
MCP Volatile Organics in Air - Mansfield Lab								
Dibromochloromethane	ND	0.200	--	ND	1.70	--		1
1,2-Dibromoethane	ND	0.200	--	ND	1.54	--		1
Tetrachloroethene	ND	0.200	--	ND	1.36	--		1
Chlorobenzene	ND	0.200	--	ND	0.921	--		1
Ethylbenzene	ND	0.200	--	ND	0.869	--		1
p/m-Xylene	ND	0.400	--	ND	1.74	--		1
Bromoform	ND	0.200	--	ND	2.07	--		1
Styrene	ND	0.200	--	ND	0.852	--		1
1,1,2,2-Tetrachloroethane	ND	0.200	--	ND	1.37	--		1
o-Xylene	ND	0.200	--	ND	0.869	--		1
1,3-Dichlorobenzene	ND	0.200	--	ND	1.20	--		1
1,4-Dichlorobenzene	ND	0.200	--	ND	1.20	--		1
1,2-Dichlorobenzene	ND	0.200	--	ND	1.20	--		1
1,2,4-Trichlorobenzene	ND	0.200	--	ND	1.48	--		1
Naphthalene	ND	0.200	--	ND	1.05	--		1
Hexachlorobutadiene	ND	0.200	--	ND	2.13	--		1

Internal Standard	% Recovery	Qualifier	Acceptance Criteria
1,4-Difluorobenzene	83		60-140
Bromochloromethane	90		60-140
chlorobenzene-d5	73		60-140

Project Name: NBHS IRA O&M
Project Number: 115058
Lab Number: L1522608
Report Date: 09/21/15

SAMPLE RESULTS

Lab ID: L1522608-02
Client ID: VAPOR OUTLET
Sample Location: NEW BEDFORD, MA
Matrix: Soil_Vapor
Anaytical Method: 101,TO15-SIM
Analytical Date: 09/19/15 02:58
Analyst: RY

Date Collected: 09/14/15 14:00
Date Received: 09/14/15
Field Prep: Not Specified

Parameter	ppbV Results	ppbV RL	ppbV MDL	ug/m3 Results	ug/m3 RL	ug/m3 MDL	Qualifier	Dilution Factor
MCP Volatile Organics in Air by SIM - Mansfield Lab								
Vinyl chloride	3.00	0.020	--	7.67	0.051	--		1
Bromomethane	ND	0.020	--	ND	0.078	--		1
Acetone	ND	1.00	--	ND	2.38	--		1
1,1-Dichloroethene	ND	0.020	--	ND	0.079	--		1
Methylene chloride	ND	1.40	--	ND	1.74	--		1
trans-1,2-Dichloroethene	1.11	0.020	--	4.40	0.079	--		1
1,1-Dichloroethane	ND	0.020	--	ND	0.081	--		1
Methyl tert butyl ether	ND	0.200	--	ND	0.721	--		1
2-Butanone	1.01	0.500	--	2.98	1.47	--		1
cis-1,2-Dichloroethene	2.78	0.020	--	11.0	0.079	--		1
Chloroform	0.227	0.020	--	1.11	0.098	--		1
1,2-Dichloroethane	ND	0.020	--	ND	0.081	--		1
1,1,1-Trichloroethane	ND	0.020	--	ND	0.109	--		1
Benzene	0.109	0.100	--	0.348	0.319	--		1
Carbon tetrachloride	ND	0.020	--	ND	0.126	--		1
1,2-Dichloropropane	ND	0.020	--	ND	0.092	--		1
Bromodichloromethane	ND	0.020	--	ND	0.134	--		1
1,4-Dioxane	ND	0.100	--	ND	0.360	--		1
Trichloroethene	0.066	0.020	--	0.355	0.107	--		1
cis-1,3-Dichloropropene	ND	0.020	--	ND	0.091	--		1
4-Methyl-2-pentanone	ND	0.500	--	ND	2.05	--		1
trans-1,3-Dichloropropene	ND	0.020	--	ND	0.091	--		1
1,1,2-Trichloroethane	ND	0.020	--	ND	0.109	--		1
Toluene	0.157	0.050	--	0.592	0.188	--		1

Project Name: NBHS IRA O&M
Project Number: 115058
Lab Number: L1522608
Report Date: 09/21/15

SAMPLE RESULTS

Lab ID: L1522608-02
Client ID: VAPOR OUTLET
Sample Location: NEW BEDFORD, MA
Date Collected: 09/14/15 14:00
Date Received: 09/14/15
Field Prep: Not Specified

Parameter	ppbV Results	ppbV RL	ppbV MDL	ug/m3 Results	ug/m3 RL	ug/m3 MDL	Qualifier	Dilution Factor
MCP Volatile Organics in Air by SIM - Mansfield Lab								
Dibromochloromethane	ND	0.020	--	ND	0.170	--		1
1,2-Dibromoethane	ND	0.020	--	ND	0.154	--		1
Tetrachloroethene	ND	0.020	--	ND	0.136	--		1
Chlorobenzene	0.093	0.020	--	0.428	0.092	--		1
Ethylbenzene	0.026	0.020	--	0.113	0.087	--		1
p/m-Xylene	0.095	0.040	--	0.413	0.174	--		1
Bromoform	ND	0.020	--	ND	0.207	--		1
Styrene	0.052	0.020	--	0.221	0.085	--		1
1,1,2,2-Tetrachloroethane	ND	0.020	--	ND	0.137	--		1
o-Xylene	0.038	0.020	--	0.165	0.087	--		1
1,3-Dichlorobenzene	0.030	0.020	--	0.180	0.120	--		1
1,4-Dichlorobenzene	0.202	0.020	--	1.21	0.120	--		1
1,2-Dichlorobenzene	1.07	0.020	--	6.43	0.120	--		1
1,2,4-Trichlorobenzene	ND	0.050	--	ND	0.371	--		1
Naphthalene	0.373	0.050	--	1.96	0.262	--		1
Hexachlorobutadiene	ND	0.050	--	ND	0.533	--		1

Internal Standard	% Recovery	Qualifier	Acceptance Criteria
1,4-difluorobenzene	88		60-140
bromochloromethane	89		60-140
chlorobenzene-d5	90		60-140

Project Name: NBHS IRA O&M
Project Number: 115058

Lab Number: L1522608
Report Date: 09/21/15

Method Blank Analysis
Batch Quality Control

Analytical Method: 101,TO-15
Analytical Date: 09/18/15 15:24

Parameter	ppbV Results	ppbV RL	ppbV MDL	ug/m3 Results	ug/m3 RL	ug/m3 MDL	Qualifier	Dilution Factor
MCP Volatile Organics in Air - Mansfield Lab for sample(s): 01 Batch: WG822805-4								
Chlorodifluoromethane	ND	0.200	--	ND	0.707	--		1
Propylene	ND	0.500	--	ND	0.861	--		1
Propane	ND	0.500	--	ND	0.902	--		1
Dichlorodifluoromethane	ND	0.200	--	ND	0.989	--		1
Chloromethane	ND	0.200	--	ND	0.413	--		1
1,2-Dichloro-1,1,2,2-tetrafluoroethane	ND	0.200	--	ND	1.40	--		1
Vinyl chloride	ND	0.200	--	ND	0.511	--		1
1,3-Butadiene	ND	0.200	--	ND	0.442	--		1
Butane	ND	0.200	--	ND	0.475	--		1
Bromomethane	ND	0.200	--	ND	0.777	--		1
Chloroethane	ND	0.200	--	ND	0.528	--		1
Ethyl Alcohol	ND	2.50	--	ND	4.71	--		1
Dichlorofluoromethane	ND	0.200	--	ND	0.842	--		1
Vinyl bromide	ND	0.200	--	ND	0.874	--		1
Acrolein	ND	0.500	--	ND	1.15	--		1
Acetone	ND	1.00	--	ND	2.38	--		1
Acetonitrile	ND	0.200	--	ND	0.336	--		1
Trichlorofluoromethane	ND	0.200	--	ND	1.12	--		1
iso-Propyl Alcohol	ND	0.500	--	ND	1.23	--		1
Acrylonitrile	ND	0.500	--	ND	1.09	--		1
Pentane	ND	0.200	--	ND	0.590	--		1
Ethyl ether	ND	0.200	--	ND	0.606	--		1
1,1-Dichloroethene	ND	0.200	--	ND	0.793	--		1
tert-Butyl Alcohol	ND	0.500	--	ND	1.52	--		1
Methylene chloride	ND	0.500	--	ND	1.74	--		1

Project Name: NBHS IRA O&M
Project Number: 115058

Lab Number: L1522608
Report Date: 09/21/15

Method Blank Analysis
Batch Quality Control

Analytical Method: 101,TO-15
Analytical Date: 09/18/15 15:24

Parameter	ppbV Results	ppbV RL	ppbV MDL	ug/m3 Results	ug/m3 RL	ug/m3 MDL	Qualifier	Dilution Factor
MCP Volatile Organics in Air - Mansfield Lab for sample(s): 01 Batch: WG822805-4								
3-Chloropropene	ND	0.200	--	ND	0.626	--		1
Carbon disulfide	ND	0.200	--	ND	0.623	--		1
1,1,2-Trichloro-1,2,2-Trifluoroethane	ND	0.200	--	ND	1.53	--		1
trans-1,2-Dichloroethene	ND	0.200	--	ND	0.793	--		1
1,1-Dichloroethane	ND	0.200	--	ND	0.809	--		1
Methyl tert butyl ether	ND	0.200	--	ND	0.721	--		1
Vinyl acetate	ND	1.00	--	ND	3.52	--		1
2-Butanone	ND	0.500	--	ND	1.47	--		1
cis-1,2-Dichloroethene	ND	0.200	--	ND	0.793	--		1
Ethyl Acetate	ND	0.500	--	ND	1.80	--		1
Chloroform	ND	0.200	--	ND	0.977	--		1
Tetrahydrofuran	ND	0.500	--	ND	1.47	--		1
2,2-Dichloropropane	ND	0.200	--	ND	0.924	--		1
1,2-Dichloroethane	ND	0.200	--	ND	0.809	--		1
n-Hexane	ND	0.200	--	ND	0.705	--		1
Isopropyl Ether	ND	0.200	--	ND	0.836	--		1
Ethyl-Tert-Butyl-Ether	ND	0.200	--	ND	0.836	--		1
1,1,1-Trichloroethane	ND	0.200	--	ND	1.09	--		1
1,1-Dichloropropene	ND	0.200	--	ND	0.908	--		1
Benzene	ND	0.200	--	ND	0.639	--		1
Carbon tetrachloride	ND	0.200	--	ND	1.26	--		1
Cyclohexane	ND	0.200	--	ND	0.688	--		1
Tertiary-Amyl Methyl Ether	ND	0.200	--	ND	0.836	--		1
Dibromomethane	ND	0.200	--	ND	1.42	--		1
1,2-Dichloropropane	ND	0.200	--	ND	0.924	--		1

Project Name: NBHS IRA O&M
Project Number: 115058

Lab Number: L1522608
Report Date: 09/21/15

Method Blank Analysis
Batch Quality Control

Analytical Method: 101,TO-15
Analytical Date: 09/18/15 15:24

Parameter	ppbV Results	ppbV RL	ppbV MDL	ug/m3 Results	ug/m3 RL	ug/m3 MDL	Qualifier	Dilution Factor
MCP Volatile Organics in Air - Mansfield Lab for sample(s): 01 Batch: WG822805-4								
Bromodichloromethane	ND	0.200	--	ND	1.34	--		1
1,4-Dioxane	ND	0.200	--	ND	0.721	--		1
Trichloroethene	ND	0.200	--	ND	1.07	--		1
2,2,4-Trimethylpentane	ND	0.200	--	ND	0.934	--		1
Methyl Methacrylate	ND	0.500	--	ND	2.05	--		1
Heptane	ND	0.200	--	ND	0.820	--		1
cis-1,3-Dichloropropene	ND	0.200	--	ND	0.908	--		1
4-Methyl-2-pentanone	ND	0.500	--	ND	2.05	--		1
trans-1,3-Dichloropropene	ND	0.200	--	ND	0.908	--		1
1,1,2-Trichloroethane	ND	0.200	--	ND	1.09	--		1
Toluene	ND	0.200	--	ND	0.754	--		1
1,3-Dichloropropane	ND	0.200	--	ND	0.924	--		1
2-Hexanone	ND	0.200	--	ND	0.820	--		1
Dibromochloromethane	ND	0.200	--	ND	1.70	--		1
1,2-Dibromoethane	ND	0.200	--	ND	1.54	--		1
Butyl Acetate	ND	0.500	--	ND	2.38	--		1
Octane	ND	0.200	--	ND	0.934	--		1
Tetrachloroethene	ND	0.200	--	ND	1.36	--		1
1,1,1,2-Tetrachloroethane	ND	0.200	--	ND	1.37	--		1
Chlorobenzene	ND	0.200	--	ND	0.921	--		1
Ethylbenzene	ND	0.200	--	ND	0.869	--		1
p/m-Xylene	ND	0.400	--	ND	1.74	--		1
Bromoform	ND	0.200	--	ND	2.07	--		1
Styrene	ND	0.200	--	ND	0.852	--		1
1,1,2,2-Tetrachloroethane	ND	0.200	--	ND	1.37	--		1

Project Name: NBHS IRA O&M
Project Number: 115058

Lab Number: L1522608
Report Date: 09/21/15

Method Blank Analysis
Batch Quality Control

Analytical Method: 101,TO-15
Analytical Date: 09/18/15 15:24

Parameter	ppbV Results	ppbV RL	ppbV MDL	ug/m3 Results	ug/m3 RL	ug/m3 MDL	Qualifier	Dilution Factor
MCP Volatile Organics in Air - Mansfield Lab for sample(s): 01 Batch: WG822805-4								
o-Xylene	ND	0.200	--	ND	0.869	--		1
1,2,3-Trichloropropane	ND	0.200	--	ND	1.21	--		1
Nonane (C9)	ND	0.200	--	ND	1.05	--		1
Isopropylbenzene	ND	0.200	--	ND	0.983	--		1
Bromobenzene	ND	0.200	--	ND	0.793	--		1
o-Chlorotoluene	ND	0.200	--	ND	1.04	--		1
n-Propylbenzene	ND	0.200	--	ND	0.983	--		1
p-Chlorotoluene	ND	0.200	--	ND	1.04	--		1
4-Ethyltoluene	ND	0.200	--	ND	0.983	--		1
1,3,5-Trimethylbenzene	ND	0.200	--	ND	0.983	--		1
tert-Butylbenzene	ND	0.200	--	ND	1.10	--		1
1,2,4-Trimethylbenzene	ND	0.200	--	ND	0.983	--		1
Decane (C10)	ND	0.200	--	ND	1.16	--		1
Benzyl chloride	ND	0.200	--	ND	1.04	--		1
1,3-Dichlorobenzene	ND	0.200	--	ND	1.20	--		1
1,4-Dichlorobenzene	ND	0.200	--	ND	1.20	--		1
sec-Butylbenzene	ND	0.200	--	ND	1.10	--		1
p-Isopropyltoluene	ND	0.200	--	ND	1.10	--		1
1,2-Dichlorobenzene	ND	0.200	--	ND	1.20	--		1
n-Butylbenzene	ND	0.200	--	ND	1.10	--		1
1,2-Dibromo-3-chloropropane	ND	0.200	--	ND	1.93	--		1
Undecane	ND	0.200	--	ND	1.28	--		1
Dodecane (C12)	ND	0.200	--	ND	1.39	--		1
1,2,4-Trichlorobenzene	ND	0.200	--	ND	1.48	--		1
Naphthalene	ND	0.200	--	ND	1.05	--		1

Project Name: NBHS IRA O&M
Project Number: 115058

Lab Number: L1522608
Report Date: 09/21/15

Method Blank Analysis
Batch Quality Control

Analytical Method: 101,TO-15
Analytical Date: 09/18/15 15:24

Parameter	ppbV Results	ppbV RL	ppbV MDL	ug/m3 Results	ug/m3 RL	ug/m3 MDL	Qualifier	Dilution Factor
MCP Volatile Organics in Air - Mansfield Lab for sample(s): 01 Batch: WG822805-4								
1,2,3-Trichlorobenzene	ND	0.200	--	ND	1.48	--		1
Hexachlorobutadiene	ND	0.200	--	ND	2.13	--		1

Project Name: NBHS IRA O&M
Project Number: 115058

Lab Number: L1522608
Report Date: 09/21/15

Method Blank Analysis
Batch Quality Control

Analytical Method: 101,TO15-SIM
Analytical Date: 09/18/15 15:52

Parameter	ppbV Results	ppbV RL	ppbV MDL	ug/m3 Results	ug/m3 RL	ug/m3 MDL	Qualifier	Dilution Factor
MCP Volatile Organics in Air by SIM - Mansfield Lab for sample(s): 02 Batch: WG822828-4								
Dichlorodifluoromethane	ND	0.200	--	ND	0.989	--		1
Chloromethane	ND	0.500	--	ND	0.500	--		1
Freon-114	ND	0.050	--	ND	0.349	--		1
Vinyl chloride	ND	0.020	--	ND	0.051	--		1
1,3-Butadiene	ND	0.020	--	ND	0.044	--		1
Bromomethane	ND	0.020	--	ND	0.078	--		1
Chloroethane	ND	0.020	--	ND	0.053	--		1
Acetone	ND	1.00	--	ND	2.38	--		1
Trichlorofluoromethane	ND	0.050	--	ND	0.281	--		1
Acrylonitrile	ND	0.500	--	ND	1.09	--		1
1,1-Dichloroethene	ND	0.020	--	ND	0.079	--		1
Methylene chloride	ND	1.40	--	ND	1.74	--		1
Freon-113	ND	0.050	--	ND	0.383	--		1
Halothane	ND	0.050	--	ND	0.404	--		1
trans-1,2-Dichloroethene	ND	0.020	--	ND	0.079	--		1
1,1-Dichloroethane	ND	0.020	--	ND	0.081	--		1
Methyl tert butyl ether	ND	0.200	--	ND	0.721	--		1
2-Butanone	ND	0.500	--	ND	1.47	--		1
cis-1,2-Dichloroethene	ND	0.020	--	ND	0.079	--		1
Chloroform	ND	0.020	--	ND	0.098	--		1
1,2-Dichloroethane	ND	0.020	--	ND	0.081	--		1
1,1,1-Trichloroethane	ND	0.020	--	ND	0.109	--		1
Benzene	ND	0.100	--	ND	0.319	--		1
Carbon tetrachloride	ND	0.020	--	ND	0.126	--		1
1,2-Dichloropropane	ND	0.020	--	ND	0.092	--		1

Project Name: NBHS IRA O&M
Project Number: 115058

Lab Number: L1522608
Report Date: 09/21/15

Method Blank Analysis
Batch Quality Control

Analytical Method: 101,TO15-SIM
Analytical Date: 09/18/15 15:52

Parameter	ppbV Results	ppbV RL	ppbV MDL	ug/m3 Results	ug/m3 RL	ug/m3 MDL	Qualifier	Dilution Factor
MCP Volatile Organics in Air by SIM - Mansfield Lab for sample(s): 02 Batch: WG822828-4								
Bromodichloromethane	ND	0.020	--	ND	0.134	--		1
1,4-Dioxane	ND	0.100	--	ND	0.360	--		1
Trichloroethene	ND	0.020	--	ND	0.107	--		1
cis-1,3-Dichloropropene	ND	0.020	--	ND	0.091	--		1
4-Methyl-2-pentanone	ND	0.500	--	ND	2.05	--		1
trans-1,3-Dichloropropene	ND	0.020	--	ND	0.091	--		1
1,1,2-Trichloroethane	ND	0.020	--	ND	0.109	--		1
Toluene	ND	0.050	--	ND	0.188	--		1
Dibromochloromethane	ND	0.020	--	ND	0.170	--		1
1,2-Dibromoethane	ND	0.020	--	ND	0.154	--		1
Tetrachloroethene	ND	0.020	--	ND	0.136	--		1
1,1,1,2-Tetrachloroethane	ND	0.020	--	ND	0.137	--		1
Chlorobenzene	ND	0.020	--	ND	0.092	--		1
Ethylbenzene	ND	0.020	--	ND	0.087	--		1
p/m-Xylene	ND	0.040	--	ND	0.174	--		1
Bromoform	ND	0.020	--	ND	0.207	--		1
Styrene	ND	0.020	--	ND	0.085	--		1
1,1,2,2-Tetrachloroethane	ND	0.020	--	ND	0.137	--		1
o-Xylene	ND	0.020	--	ND	0.087	--		1
Isopropylbenzene	ND	0.500	--	ND	0.983	--		1
1,3,5-Trimethybenzene	ND	0.020	--	ND	0.098	--		1
1,2,4-Trimethylbenzene	ND	0.020	--	ND	0.098	--		1
1,3-Dichlorobenzene	ND	0.020	--	ND	0.120	--		1
1,4-Dichlorobenzene	ND	0.020	--	ND	0.120	--		1
sec-Butylbenzene	ND	0.500	--	ND	1.10	--		1

Project Name: NBHS IRA O&M
Project Number: 115058

Lab Number: L1522608
Report Date: 09/21/15

Method Blank Analysis
Batch Quality Control

Analytical Method: 101,TO15-SIM
Analytical Date: 09/18/15 15:52

Parameter	ppbV Results	ppbV RL	ppbV MDL	ug/m3 Results	ug/m3 RL	ug/m3 MDL	Qualifier	Dilution Factor
MCP Volatile Organics in Air by SIM - Mansfield Lab for sample(s): 02 Batch: WG822828-4								
p-Isopropyltoluene	ND	0.500	--	ND	1.10	--		1
1,2-Dichlorobenzene	ND	0.020	--	ND	0.120	--		1
n-Butylbenzene	ND	0.500	--	ND	1.10	--		1
1,2,4-Trichlorobenzene	ND	0.050	--	ND	0.371	--		1
Naphthalene	ND	0.050	--	ND	0.262	--		1
1,2,3-Trichlorobenzene	ND	0.050	--	ND	0.371	--		1
Hexachlorobutadiene	ND	0.050	--	ND	0.533	--		1

Lab Control Sample Analysis
Batch Quality Control

Project Name: NBHS IRA O&M
Project Number: 115058

Lab Number: L1522608
Report Date: 09/21/15

Parameter	LCS %Recovery	Qual	LCSD %Recovery	Qual	%Recovery Limits	RPD	Qual	RPD Limits
MCP Volatile Organics in Air - Mansfield Lab Associated sample(s): 01 Batch: WG822805-3								
Chlorodifluoromethane	86		-		70-130	-		
Propylene	101		-		70-130	-		
Dichlorodifluoromethane	84		-		70-130	-		
Chloromethane	91		-		70-130	-		
1,2-Dichloro-1,1,2,2-tetrafluoroethane	83		-		70-130	-		
Vinyl chloride	80		-		70-130	-		
1,3-Butadiene	90		-		70-130	-		
Bromomethane	78		-		70-130	-		
Chloroethane	82		-		70-130	-		
Ethyl Alcohol	71		-		70-130	-		
Dichlorofluoromethane	77		-		70-130	-		
Vinyl bromide	78		-		70-130	-		
Acrolein	81		-		70-130	-		
Acetone	92		-		50-150	-		
Acetonitrile	83		-		70-130	-		
Trichlorofluoromethane	92		-		70-130	-		
iso-Propyl Alcohol	80		-		70-130	-		
Acrylonitrile	78		-		70-130	-		
Pentane	76		-		70-130	-		
Ethyl ether	77		-		70-130	-		
1,1-Dichloroethene	87		-		70-130	-		

Lab Control Sample Analysis
Batch Quality Control

Project Name: NBHS IRA O&M
Project Number: 115058

Lab Number: L1522608
Report Date: 09/21/15

Parameter	LCS %Recovery	Qual	LCSD %Recovery	Qual	%Recovery Limits	RPD	Qual	RPD Limits
MCP Volatile Organics in Air - Mansfield Lab Associated sample(s): 01 Batch: WG822805-3								
tert-Butyl Alcohol	75		-		70-130	-		
Methylene chloride	87		-		70-130	-		
3-Chloropropene	80		-		70-130	-		
Carbon disulfide	75		-		70-130	-		
1,1,2-Trichloro-1,2,2-Trifluoroethane	78		-		70-130	-		
trans-1,2-Dichloroethene	83		-		70-130	-		
1,1-Dichloroethane	84		-		70-130	-		
Methyl tert butyl ether	84		-		70-130	-		
Vinyl acetate	106		-		70-130	-		
2-Butanone	97		-		70-130	-		
cis-1,2-Dichloroethene	102		-		70-130	-		
Ethyl Acetate	98		-		70-130	-		
Chloroform	86		-		70-130	-		
Tetrahydrofuran	88		-		70-130	-		
2,2-Dichloropropane	82		-		70-130	-		
1,2-Dichloroethane	98		-		70-130	-		
n-Hexane	106		-		70-130	-		
Isopropyl Ether	85		-		70-130	-		
Ethyl-Tert-Butyl-Ether	105		-		70-130	-		
1,1,1-Trichloroethane	114		-		70-130	-		
1,1-Dichloropropene	103		-		70-130	-		

Lab Control Sample Analysis
Batch Quality Control

Project Name: NBHS IRA O&M
Project Number: 115058

Lab Number: L1522608
Report Date: 09/21/15

Parameter	LCS %Recovery	Qual	LCSD %Recovery	Qual	%Recovery Limits	RPD	Qual	RPD Limits
MCP Volatile Organics in Air - Mansfield Lab Associated sample(s): 01 Batch: WG822805-3								
Benzene	98		-		70-130	-		
Carbon tetrachloride	118		-		70-130	-		
Cyclohexane	108		-		70-130	-		
Tertiary-Amyl Methyl Ether	97		-		70-130	-		
Dibromomethane	99		-		70-130	-		
1,2-Dichloropropane	100		-		70-130	-		
Bromodichloromethane	113		-		70-130	-		
1,4-Dioxane	97		-		50-150	-		
Trichloroethene	102		-		70-130	-		
2,2,4-Trimethylpentane	114		-		70-130	-		
Methyl Methacrylate[1]	120		-		70-130	-		
Heptane	121		-		70-130	-		
cis-1,3-Dichloropropene	113		-		70-130	-		
4-Methyl-2-pentanone	124		-		70-130	-		
trans-1,3-Dichloropropene	100		-		70-130	-		
1,1,2-Trichloroethane	107		-		70-130	-		
Toluene	76		-		70-130	-		
1,3-Dichloropropane	72		-		70-130	-		
2-Hexanone	97		-		70-130	-		
Dibromochloromethane	84		-		70-130	-		
1,2-Dibromoethane	81		-		70-130	-		

Lab Control Sample Analysis
Batch Quality Control

Project Name: NBHS IRA O&M
Project Number: 115058

Lab Number: L1522608
Report Date: 09/21/15

Parameter	LCS %Recovery	Qual	LCSD %Recovery	Qual	%Recovery Limits	RPD	Qual	RPD Limits
MCP Volatile Organics in Air - Mansfield Lab Associated sample(s): 01 Batch: WG822805-3								
Octane	71		-		70-130	-		
Tetrachloroethene	76		-		70-130	-		
1,1,1,2-Tetrachloroethane	76		-		70-130	-		
Chlorobenzene	78		-		70-130	-		
Ethylbenzene	81		-		70-130	-		
p/m-Xylene	83		-		70-130	-		
Bromoform	83		-		70-130	-		
Styrene	84		-		70-130	-		
1,1,2,2-Tetrachloroethane	78		-		70-130	-		
o-Xylene	83		-		70-130	-		
1,2,3-Trichloropropane	76		-		70-130	-		
Nonane (C9)	92		-		70-130	-		
Isopropylbenzene	77		-		70-130	-		
Bromobenzene	78		-		70-130	-		
o-Chlorotoluene	76		-		70-130	-		
n-Propylbenzene	80		-		70-130	-		
p-Chlorotoluene	74		-		70-130	-		
4-Ethyltoluene	80		-		70-130	-		
1,3,5-Trimethylbenzene	81		-		70-130	-		
tert-Butylbenzene	79		-		70-130	-		
1,2,4-Trimethylbenzene	88		-		70-130	-		

Lab Control Sample Analysis
Batch Quality Control

Project Name: NBHS IRA O&M
Project Number: 115058

Lab Number: L1522608
Report Date: 09/21/15

Parameter	LCS %Recovery	Qual	LCSD %Recovery	Qual	%Recovery Limits	RPD	Qual	RPD Limits
MCP Volatile Organics in Air - Mansfield Lab Associated sample(s): 01 Batch: WG822805-3								
Decane (C10)	96		-		70-130	-		
Benzyl chloride	90		-		70-130	-		
1,3-Dichlorobenzene	86		-		70-130	-		
1,4-Dichlorobenzene	83		-		70-130	-		
sec-Butylbenzene	79		-		70-130	-		
p-Isopropyltoluene	77		-		70-130	-		
1,2-Dichlorobenzene	87		-		70-130	-		
n-Butylbenzene	100		-		70-130	-		
1,2-Dibromo-3-chloropropane	105		-		70-130	-		
Undecane	**138**	Q	-		70-130	-		
Dodecane (C12)	**161**	Q	-		70-130	-		
1,2,4-Trichlorobenzene	105		-		50-150	-		
Naphthalene	111		-		50-150	-		
1,2,3-Trichlorobenzene	98		-		70-130	-		
Hexachlorobutadiene	97		-		50-150	-		

Lab Control Sample Analysis
Batch Quality Control

Project Name: NBHS IRA O&M
Project Number: 115058

Lab Number: L1522608
Report Date: 09/21/15

Parameter	LCS %Recovery	Qual	LCSD %Recovery	Qual	%Recovery Limits	RPD	Qual	RPD Limits
MCP Volatile Organics in Air by SIM - Mansfield Lab Associated sample(s): 02 Batch: WG822828-3								
Dichlorodifluoromethane	73		-		70-130	-		
Chloromethane	83		-		70-130	-		
1,2-Dichloro-1,1,2,2-tetrafluoroethane	84		-		70-130	-		
Vinyl chloride	84		-		70-130	-		
1,3-Butadiene	88		-		70-130	-		
Bromomethane	80		-		70-130	-		
Chloroethane	83		-		70-130	-		
Acetone	80		-		50-150	-		
Trichlorofluoromethane	83		-		70-130	-		
1,1-Dichloroethene	84		-		70-130	-		
Methylene chloride	82		-		70-130	-		
1,1,2-Trichloro-1,2,2-Trifluoroethane	85		-		70-130	-		
Halothane	77		-		70-130	-		
trans-1,2-Dichloroethene	81		-		70-130	-		
1,1-Dichloroethane	83		-		70-130	-		
Methyl tert butyl ether	81		-		70-130	-		
2-Butanone	80		-		70-130	-		
cis-1,2-Dichloroethene	94		-		70-130	-		
Chloroform	84		-		70-130	-		
1,2-Dichloroethane	83		-		70-130	-		
1,1,1-Trichloroethane	90		-		70-130	-		

Lab Control Sample Analysis
Batch Quality Control

Project Name: NBHS IRA O&M
Project Number: 115058

Lab Number: L1522608
Report Date: 09/21/15

Parameter	LCS %Recovery	Qual	LCSD %Recovery	Qual	%Recovery Limits	RPD	Qual	RPD Limits
MCP Volatile Organics in Air by SIM - Mansfield Lab Associated sample(s): 02 Batch: WG822828-3								
Benzene	86		-		70-130	-		
Carbon tetrachloride	97		-		70-130	-		
1,2-Dichloropropane	90		-		70-130	-		
Bromodichloromethane	93		-		70-130	-		
1,4-Dioxane	88		-		50-150	-		
Trichloroethene	87		-		70-130	-		
cis-1,3-Dichloropropene	96		-		70-130	-		
4-Methyl-2-pentanone	93		-		70-130	-		
trans-1,3-Dichloropropene	84		-		70-130	-		
1,1,2-Trichloroethane	91		-		70-130	-		
Toluene	81		-		70-130	-		
Dibromochloromethane	84		-		70-130	-		
1,2-Dibromoethane	84		-		70-130	-		
Tetrachloroethene	76		-		70-130	-		
Chlorobenzene	81		-		70-130	-		
Ethylbenzene	80		-		70-130	-		
p/m-Xylene	83		-		70-130	-		
Bromoform	86		-		70-130	-		
Styrene	82		-		70-130	-		
1,1,2,2-Tetrachloroethane	87		-		70-130	-		
o-Xylene	86		-		70-130	-		

Lab Control Sample Analysis
Batch Quality Control

Project Name: NBHS IRA O&M

Project Number: 115058

Lab Number: L1522608

Report Date: 09/21/15

Parameter	LCS %Recovery	Qual	LCSD %Recovery	Qual	%Recovery Limits	RPD	Qual	RPD Limits
MCP Volatile Organics in Air by SIM - Mansfield Lab Associated sample(s): 02 Batch: WG822828-3								
1,3,5-Trimethylbenzene	84		-		70-130	-		
1,2,4-Trimethylbenzene	87		-		70-130	-		
1,3-Dichlorobenzene	84		-		70-130	-		
1,4-Dichlorobenzene	81		-		70-130	-		
1,2-Dichlorobenzene	71		-		70-130	-		
1,2,4-Trichlorobenzene	94		-		50-150	-		
Naphthalene	88		-		50-150	-		
1,2,3-Trichlorobenzene	90		-		70-130	-		
Hexachlorobutadiene	91		-		50-150	-		

Lab Duplicate Analysis
Batch Quality Control

Project Name: NBHS IRA O&M
Project Number: 115058

Lab Number: L1522608
Report Date: 09/21/15

Parameter	Native Sample	Duplicate Sample	Units	RPD	Qual	RPD Limits
MCP Volatile Organics in Air - Mansfield Lab Associated sample(s): 01 QC Batch ID: WG822805-5 QC Sample: L1522608-01 Client ID: VAPOR INLET						
Vinyl chloride	2.12	2.60	ppbV	20		25
Bromomethane	ND	ND	ppbV	NC		25
Acetone	2.70	3.16	ppbV	16		25
1,1-Dichloroethene	ND	ND	ppbV	NC		25
Methylene chloride	ND	ND	ppbV	NC		25
trans-1,2-Dichloroethene	0.635	0.741	ppbV	15		25
1,1-Dichloroethane	ND	ND	ppbV	NC		25
Methyl tert butyl ether	ND	ND	ppbV	NC		25
2-Butanone	ND	0.540	ppbV	NC		25
cis-1,2-Dichloroethene	0.928	1.12	ppbV	19		25
Chloroform	0.369	0.396	ppbV	7		25
1,2-Dichloroethane	ND	ND	ppbV	NC		25
1,1,1-Trichloroethane	ND	ND	ppbV	NC		25
Benzene	ND	ND	ppbV	NC		25
Carbon tetrachloride	ND	ND	ppbV	NC		25
1,2-Dichloropropane	ND	ND	ppbV	NC		25
Bromodichloromethane	ND	ND	ppbV	NC		25
1,4-Dioxane	ND	ND	ppbV	NC		25
Trichloroethene	0.658	0.694	ppbV	5		25

Lab Duplicate Analysis
Batch Quality Control

Project Name: NBHS IRA O&M
Project Number: 115058

Lab Number: L1522608
Report Date: 09/21/15

Parameter	Native Sample	Duplicate Sample	Units	RPD	RPD Limits
MCP Volatile Organics in Air - Mansfield Lab Associated sample(s): 01 QC Batch ID: WG822805-5 QC Sample: L1522608-01 Client ID: VAPOR INLET					
cis-1,3-Dichloropropene	ND	ND	ppbV	NC	25
4-Methyl-2-pentanone	ND	ND	ppbV	NC	25
trans-1,3-Dichloropropene	ND	ND	ppbV	NC	25
1,1,2-Trichloroethane	ND	ND	ppbV	NC	25
Toluene	0.620	0.695	ppbV	11	25
Dibromochloromethane	ND	ND	ppbV	NC	25
1,2-Dibromoethane	ND	ND	ppbV	NC	25
Tetrachloroethene	ND	ND	ppbV	NC	25
Chlorobenzene	ND	ND	ppbV	NC	25
Ethylbenzene	ND	ND	ppbV	NC	25
p/m-Xylene	ND	ND	ppbV	NC	25
Bromoform	ND	ND	ppbV	NC	25
Styrene	ND	ND	ppbV	NC	25
1,1,2,2-Tetrachloroethane	ND	ND	ppbV	NC	25
o-Xylene	ND	ND	ppbV	NC	25
1,3-Dichlorobenzene	ND	ND	ppbV	NC	25
1,4-Dichlorobenzene	ND	ND	ppbV	NC	25
1,2-Dichlorobenzene	ND	ND	ppbV	NC	25
1,2,4-Trichlorobenzene	ND	ND	ppbV	NC	25

Lab Duplicate Analysis
Batch Quality Control

Project Name: NBHS IRA O&M
Project Number: 115058

Lab Number: L1522608
Report Date: 09/21/15

Parameter	Native Sample	Duplicate Sample	Units	RPD	RPD Limits
MCP Volatile Organics in Air - Mansfield Lab Associated sample(s): 01 QC Batch ID: WG822805-5 QC Sample: L1522608-01 Client ID: VAPOR INLET					
Naphthalene	ND	ND	ppbV	NC	25
Hexachlorobutadiene	ND	ND	ppbV	NC	25

Lab Duplicate Analysis
Batch Quality Control

Project Name: NBHS IRA O&M
Project Number: 115058

Lab Number: L1522608
Report Date: 09/21/15

Parameter	Native Sample	Duplicate Sample	Units	RPD	RPD Limits
MCP Volatile Organics in Air by SIM - Mansfield Lab Associated sample(s): 02 QC Batch ID: WG822828-5 QC Sample: L1522608-02 Client ID: VAPOR OUTLET					
Vinyl chloride	3.00	3.71	ppbV	21	25
Bromomethane	ND	ND	ppbV	NC	25
Acetone	ND	ND	ppbV	NC	25
1,1-Dichloroethene	ND	ND	ppbV	NC	25
Methylene chloride	ND	ND	ppbV	NC	25
trans-1,2-Dichloroethene	1.11	1.33	ppbV	18	25
1,1-Dichloroethane	ND	ND	ppbV	NC	25
Methyl tert butyl ether	ND	ND	ppbV	NC	25
2-Butanone	1.01	1.24	ppbV	20	25
cis-1,2-Dichloroethene	2.78	3.32	ppbV	18	25
Chloroform	0.227	0.277	ppbV	20	25
1,2-Dichloroethane	ND	ND	ppbV	NC	25
1,1,1-Trichloroethane	ND	ND	ppbV	NC	25
Benzene	0.109	0.134	ppbV	21	25
Carbon tetrachloride	ND	ND	ppbV	NC	25
1,2-Dichloropropane	ND	ND	ppbV	NC	25
Bromodichloromethane	ND	ND	ppbV	NC	25
1,4-Dioxane	ND	ND	ppbV	NC	25
Trichloroethene	0.066	0.066	ppbV	0	25

Lab Duplicate Analysis
Batch Quality Control

Project Name: NBHS IRA O&M
Project Number: 115058

Lab Number: L1522608
Report Date: 09/21/15

Parameter	Native Sample	Duplicate Sample	Units	RPD	RPD Limits
MCP Volatile Organics in Air by SIM - Mansfield Lab Associated sample(s): 02 QC Batch ID: WG822828-5 QC Sample: L1522608-02 Client ID: VAPOR OUTLET					
cis-1,3-Dichloropropene	ND	ND	ppbV	NC	25
4-Methyl-2-pentanone	ND	ND	ppbV	NC	25
trans-1,3-Dichloropropene	ND	ND	ppbV	NC	25
1,1,2-Trichloroethane	ND	ND	ppbV	NC	25
Toluene	0.157	0.180	ppbV	14	25
Dibromochloromethane	ND	ND	ppbV	NC	25
1,2-Dibromoethane	ND	ND	ppbV	NC	25
Tetrachloroethene	ND	ND	ppbV	NC	25
Chlorobenzene	0.093	0.108	ppbV	15	25
Ethylbenzene	0.026	0.028	ppbV	7	25
p/m-Xylene	0.095	0.106	ppbV	11	25
Bromoform	ND	ND	ppbV	NC	25
Styrene	0.052	0.057	ppbV	9	25
1,1,2,2-Tetrachloroethane	ND	ND	ppbV	NC	25
o-Xylene	0.038	0.042	ppbV	10	25
1,3-Dichlorobenzene	0.030	0.034	ppbV	13	25
1,4-Dichlorobenzene	0.202	0.237	ppbV	16	25
1,2-Dichlorobenzene	1.07	1.25	ppbV	16	25
1,2,4-Trichlorobenzene	ND	ND	ppbV	NC	25

Lab Duplicate Analysis
Batch Quality Control

Project Name: NBHS IRA O&M
Project Number: 115058

Lab Number: L1522608
Report Date: 09/21/15

Parameter	Native Sample	Duplicate Sample	Units	RPD	RPD Limits
MCP Volatile Organics in Air by SIM - Mansfield Lab Associated sample(s): 02 QC Batch ID: WG822828-5 QC Sample: L1522608-02 Client ID: VAPOR OUTLET					
Naphthalene	0.373	0.424	ppbV	13	25
Hexachlorobutadiene	ND	ND	ppbV	NC	25

Project Name: NBHS IRA O&M

Lab Number: L1522608

Project Number: 115058

Report Date: 09/21/15

Canister and Flow Controller Information

Samplenum	Client ID	Media ID	Media Type	Date Prepared	Bottle Order	Cleaning Batch ID	Can Leak Check	Initial Pressure (in. Hg)	Pressure on Receipt (in. Hg)	Flow Controler Leak Chk	Flow Out mL/min	Flow In mL/min	% RPD
L1522608-01	VAPOR INLET	0684	SV200	09/14/15	209463		-	-	-	Pass	222	211	5
L1522608-01	VAPOR INLET	121	2.7L Can	09/14/15	209463	L1522261-01	Pass	-28.9	-3.2	-	-	-	-
L1522608-02	VAPOR OUTLET	0572	SV200	09/14/15	209463		-	-	-	Pass	222	212	5
L1522608-02	VAPOR OUTLET	349	2.7L Can	09/14/15	209463	L1522261-01	Pass	-29.3	-4.0	-	-	-	-

Project Name: BATCH CANISTER CERTIFICATION **Lab Number:** L1522261

Project Number: CANISTER QC BAT **Report Date:** 09/21/15

Air Canister Certification Results

Lab ID:	L1522261-01	Date Collected:	09/09/15 16:00
Client ID:	CAN 1728 SHELF 1	Date Received:	09/10/15
Sample Location:		Field Prep:	Not Specified
Matrix:	Air		
Anaytical Method:	48,TO-15		
Analytical Date:	09/11/15 16:31		
Analyst:	RY		

	ppbV			ug/m3				
Parameter	**Results**	**RL**	**MDL**	**Results**	**RL**	**MDL**	**Qualifier**	**Dilution Factor**
Volatile Organics in Air - Mansfield Lab								
Chlorodifluoromethane	ND	0.200	--	ND	0.707	--		1
Propylene	ND	0.500	--	ND	0.861	--		1
Propane	ND	0.500	--	ND	0.902	--		1
Dichlorodifluoromethane	ND	0.200	--	ND	0.989	--		1
Chloromethane	ND	0.200	--	ND	0.413	--		1
Freon-114	ND	0.200	--	ND	1.40	--		1
Methanol	ND	5.00	--	ND	6.55	--		1
Vinyl chloride	ND	0.200	--	ND	0.511	--		1
1,3-Butadiene	ND	0.200	--	ND	0.442	--		1
Butane	ND	0.200	--	ND	0.475	--		1
Bromomethane	ND	0.200	--	ND	0.777	--		1
Chloroethane	ND	0.200	--	ND	0.528	--		1
Ethanol	ND	2.50	--	ND	4.71	--		1
Dichlorofluoromethane	ND	0.200	--	ND	0.842	--		1
Vinyl bromide	ND	0.200	--	ND	0.874	--		1
Acrolein	ND	0.500	--	ND	1.15	--		1
Acetone	ND	1.00	--	ND	2.38	--		1
Acetonitrile	ND	0.200	--	ND	0.336	--		1
Trichlorofluoromethane	ND	0.200	--	ND	1.12	--		1
Isopropanol	ND	0.500	--	ND	1.23	--		1
Acrylonitrile	ND	0.500	--	ND	1.09	--		1
Pentane	ND	0.200	--	ND	0.590	--		1
Ethyl ether	ND	0.200	--	ND	0.606	--		1
1,1-Dichloroethene	ND	0.200	--	ND	0.793	--		1
Tertiary butyl Alcohol	ND	0.500	--	ND	1.52	--		1

Project Name: BATCH CANISTER CERTIFICATION **Lab Number:** L1522261

Project Number: CANISTER QC BAT **Report Date:** 09/21/15

Air Canister Certification Results

Lab ID: L1522261-01 Date Collected: 09/09/15 16:00

Client ID: CAN 1728 SHELF 1 Date Received: 09/10/15

Sample Location: Field Prep: Not Specified

	ppbV			ug/m3				
Parameter	**Results**	**RL**	**MDL**	**Results**	**RL**	**MDL**	**Qualifier**	**Dilution Factor**
Volatile Organics in Air - Mansfield Lab								
Methylene chloride	ND	0.500	--	ND	1.74	--		1
3-Chloropropene	ND	0.200	--	ND	0.626	--		1
Carbon disulfide	ND	0.200	--	ND	0.623	--		1
Freon-113	ND	0.200	--	ND	1.53	--		1
trans-1,2-Dichloroethene	ND	0.200	--	ND	0.793	--		1
1,1-Dichloroethane	ND	0.200	--	ND	0.809	--		1
Methyl tert butyl ether	ND	0.200	--	ND	0.721	--		1
Vinyl acetate	ND	1.00	--	ND	3.52	--		1
2-Butanone	ND	0.500	--	ND	1.47	--		1
cis-1,2-Dichloroethene	ND	0.200	--	ND	0.793	--		1
Ethyl Acetate	ND	0.500	--	ND	1.80	--		1
Chloroform	ND	0.200	--	ND	0.977	--		1
Tetrahydrofuran	ND	0.500	--	ND	1.47	--		1
2,2-Dichloropropane	ND	0.200	--	ND	0.924	--		1
1,2-Dichloroethane	ND	0.200	--	ND	0.809	--		1
n-Hexane	ND	0.200	--	ND	0.705	--		1
Diisopropyl ether	ND	0.200	--	ND	0.836	--		1
tert-Butyl Ethyl Ether	ND	0.200	--	ND	0.836	--		1
1,1,1-Trichloroethane	ND	0.200	--	ND	1.09	--		1
1,1-Dichloropropene	ND	0.200	--	ND	0.908	--		1
Benzene	ND	0.200	--	ND	0.639	--		1
Carbon tetrachloride	ND	0.200	--	ND	1.26	--		1
Cyclohexane	ND	0.200	--	ND	0.688	--		1
tert-Amyl Methyl Ether	ND	0.200	--	ND	0.836	--		1
Dibromomethane	ND	0.200	--	ND	1.42	--		1
1,2-Dichloropropane	ND	0.200	--	ND	0.924	--		1
Bromodichloromethane	ND	0.200	--	ND	1.34	--		1
1,4-Dioxane	ND	0.200	--	ND	0.721	--		1

Project Name: BATCH CANISTER CERTIFICATION **Lab Number:** L1522261

Project Number: CANISTER QC BAT **Report Date:** 09/21/15

Air Canister Certification Results

Lab ID: L1522261-01 Date Collected: 09/09/15 16:00

Client ID: CAN 1728 SHELF 1 Date Received: 09/10/15

Sample Location: Field Prep: Not Specified

	ppbV			ug/m3				
Parameter	**Results**	**RL**	**MDL**	**Results**	**RL**	**MDL**	**Qualifier**	**Dilution Factor**
Volatile Organics in Air - Mansfield Lab								
Trichloroethene	ND	0.200	--	ND	1.07	--		1
2,2,4-Trimethylpentane	ND	0.200	--	ND	0.934	--		1
Methyl Methacrylate	ND	0.500	--	ND	2.05	--		1
Heptane	ND	0.200	--	ND	0.820	--		1
cis-1,3-Dichloropropene	ND	0.200	--	ND	0.908	--		1
4-Methyl-2-pentanone	ND	0.500	--	ND	2.05	--		1
trans-1,3-Dichloropropene	ND	0.200	--	ND	0.908	--		1
1,1,2-Trichloroethane	ND	0.200	--	ND	1.09	--		1
Toluene	ND	0.200	--	ND	0.754	--		1
1,3-Dichloropropane	ND	0.200	--	ND	0.924	--		1
2-Hexanone	ND	0.200	--	ND	0.820	--		1
Dibromochloromethane	ND	0.200	--	ND	1.70	--		1
1,2-Dibromoethane	ND	0.200	--	ND	1.54	--		1
Butyl acetate	ND	0.500	--	ND	2.38	--		1
Octane	ND	0.200	--	ND	0.934	--		1
Tetrachloroethene	ND	0.200	--	ND	1.36	--		1
1,1,1,2-Tetrachloroethane	ND	0.200	--	ND	1.37	--		1
Chlorobenzene	ND	0.200	--	ND	0.921	--		1
Ethylbenzene	ND	0.200	--	ND	0.869	--		1
p/m-Xylene	ND	0.400	--	ND	1.74	--		1
Bromoform	ND	0.200	--	ND	2.07	--		1
Styrene	ND	0.200	--	ND	0.852	--		1
1,1,2,2-Tetrachloroethane	ND	0.200	--	ND	1.37	--		1
o-Xylene	ND	0.200	--	ND	0.869	--		1
1,2,3-Trichloropropane	ND	0.200	--	ND	1.21	--		1
Nonane	ND	0.200	--	ND	1.05	--		1
Isopropylbenzene	ND	0.200	--	ND	0.983	--		1
Bromobenzene	ND	0.200	--	ND	0.793	--		1

Project Name: BATCH CANISTER CERTIFICATION **Lab Number:** L1522261

Project Number: CANISTER QC BAT **Report Date:** 09/21/15

Air Canister Certification Results

Lab ID: L1522261-01 Date Collected: 09/09/15 16:00

Client ID: CAN 1728 SHELF 1 Date Received: 09/10/15

Sample Location: Field Prep: Not Specified

Parameter	ppbV Results	ppbV RL	ppbV MDL	ug/m3 Results	ug/m3 RL	ug/m3 MDL	Qualifier	Dilution Factor
Volatile Organics in Air - Mansfield Lab								
2-Chlorotoluene	ND	0.200	--	ND	1.04	--		1
n-Propylbenzene	ND	0.200	--	ND	0.983	--		1
4-Chlorotoluene	ND	0.200	--	ND	1.04	--		1
4-Ethyltoluene	ND	0.200	--	ND	0.983	--		1
1,3,5-Trimethylbenzene	ND	0.200	--	ND	0.983	--		1
tert-Butylbenzene	ND	0.200	--	ND	1.10	--		1
1,2,4-Trimethylbenzene	ND	0.200	--	ND	0.983	--		1
Decane	ND	0.200	--	ND	1.16	--		1
Benzyl chloride	ND	0.200	--	ND	1.04	--		1
1,3-Dichlorobenzene	ND	0.200	--	ND	1.20	--		1
1,4-Dichlorobenzene	ND	0.200	--	ND	1.20	--		1
sec-Butylbenzene	ND	0.200	--	ND	1.10	--		1
p-Isopropyltoluene	ND	0.200	--	ND	1.10	--		1
1,2-Dichlorobenzene	ND	0.200	--	ND	1.20	--		1
n-Butylbenzene	ND	0.200	--	ND	1.10	--		1
1,2-Dibromo-3-chloropropane	ND	0.200	--	ND	1.93	--		1
Undecane	ND	0.200	--	ND	1.28	--		1
Dodecane	ND	0.200	--	ND	1.39	--		1
1,2,4-Trichlorobenzene	ND	0.200	--	ND	1.48	--		1
Naphthalene	ND	0.200	--	ND	1.05	--		1
1,2,3-Trichlorobenzene	ND	0.200	--	ND	1.48	--		1
Hexachlorobutadiene	ND	0.200	--	ND	2.13	--		1

	Results	Qualifier	Units	RDL	Dilution Factor
Tentatively Identified Compounds					
No Tentatively Identified Compounds					

Project Name: BATCH CANISTER CERTIFICATION **Lab Number:** L1522261

Project Number: CANISTER QC BAT **Report Date:** 09/21/15

Air Canister Certification Results

Lab ID: L1522261-01 Date Collected: 09/09/15 16:00

Client ID: CAN 1728 SHELF 1 Date Received: 09/10/15

Sample Location: Field Prep: Not Specified

Parameter	ppbV Results	ppbV RL	ppbV MDL	ug/m3 Results	ug/m3 RL	ug/m3 MDL	Qualifier	Dilution Factor
Volatile Organics in Air - Mansfield Lab								

Internal Standard	% Recovery	Qualifier	Acceptance Criteria
1,4-Difluorobenzene	95		60-140
Bromochloromethane	96		60-140
chlorobenzene-d5	93		60-140

Project Name: BATCH CANISTER CERTIFICATION
Project Number: CANISTER QC BAT

Lab Number: L1522261
Report Date: 09/21/15

Air Canister Certification Results

Lab ID:	L1522261-01	Date Collected:	09/09/15 16:00
Client ID:	CAN 1728 SHELF 1	Date Received:	09/10/15
Sample Location:		Field Prep:	Not Specified
Matrix:	Air		
Anaytical Method:	48,TO-15-SIM		
Analytical Date:	09/10/15 20:43		
Analyst:	MB		

	ppbV			ug/m3				
Parameter	**Results**	**RL**	**MDL**	**Results**	**RL**	**MDL**	**Qualifier**	**Dilution Factor**
Volatile Organics in Air by SIM - Mansfield Lab								
Dichlorodifluoromethane	ND	0.200	--	ND	0.989	--		1
Chloromethane	ND	0.200	--	ND	0.413	--		1
Freon-114	ND	0.050	--	ND	0.349	--		1
Vinyl chloride	ND	0.020	--	ND	0.051	--		1
1,3-Butadiene	ND	0.020	--	ND	0.044	--		1
Bromomethane	ND	0.020	--	ND	0.078	--		1
Chloroethane	ND	0.020	--	ND	0.053	--		1
Acetone	ND	1.00	--	ND	2.38	--		1
Trichlorofluoromethane	ND	0.050	--	ND	0.281	--		1
Acrylonitrile	ND	0.500	--	ND	1.09	--		1
1,1-Dichloroethene	ND	0.020	--	ND	0.079	--		1
Methylene chloride	ND	0.500	--	ND	1.74	--		1
Freon-113	ND	0.050	--	ND	0.383	--		1
Halothane	ND	0.050	--	ND	0.404	--		1
trans-1,2-Dichloroethene	ND	0.020	--	ND	0.079	--		1
1,1-Dichloroethane	ND	0.020	--	ND	0.081	--		1
Methyl tert butyl ether	ND	0.200	--	ND	0.721	--		1
2-Butanone	ND	0.500	--	ND	1.47	--		1
cis-1,2-Dichloroethene	ND	0.020	--	ND	0.079	--		1
Chloroform	ND	0.020	--	ND	0.098	--		1
1,2-Dichloroethane	ND	0.020	--	ND	0.081	--		1
1,1,1-Trichloroethane	ND	0.020	--	ND	0.109	--		1
Benzene	ND	0.100	--	ND	0.319	--		1
Carbon tetrachloride	ND	0.020	--	ND	0.126	--		1
1,2-Dichloropropane	ND	0.020	--	ND	0.092	--		1

Project Name: BATCH CANISTER CERTIFICATION **Lab Number:** L1522261

Project Number: CANISTER QC BAT **Report Date:** 09/21/15

Air Canister Certification Results

Lab ID: L1522261-01 Date Collected: 09/09/15 16:00

Client ID: CAN 1728 SHELF 1 Date Received: 09/10/15

Sample Location: Field Prep: Not Specified

Parameter	ppbV Results	ppbV RL	ppbV MDL	ug/m3 Results	ug/m3 RL	ug/m3 MDL	Qualifier	Dilution Factor
Volatile Organics in Air by SIM - Mansfield Lab								
Bromodichloromethane	ND	0.020	--	ND	0.134	--		1
1,4-Dioxane	ND	0.100	--	ND	0.360	--		1
Trichloroethene	ND	0.020	--	ND	0.107	--		1
cis-1,3-Dichloropropene	ND	0.020	--	ND	0.091	--		1
4-Methyl-2-pentanone	ND	0.500	--	ND	2.05	--		1
trans-1,3-Dichloropropene	ND	0.020	--	ND	0.091	--		1
1,1,2-Trichloroethane	ND	0.020	--	ND	0.109	--		1
Toluene	ND	0.050	--	ND	0.188	--		1
Dibromochloromethane	ND	0.020	--	ND	0.170	--		1
1,2-Dibromoethane	ND	0.020	--	ND	0.154	--		1
Tetrachloroethene	ND	0.020	--	ND	0.136	--		1
1,1,1,2-Tetrachloroethane	ND	0.020	--	ND	0.137	--		1
Chlorobenzene	ND	0.020	--	ND	0.092	--		1
Ethylbenzene	ND	0.020	--	ND	0.087	--		1
p/m-Xylene	ND	0.040	--	ND	0.174	--		1
Bromoform	ND	0.020	--	ND	0.207	--		1
Styrene	ND	0.020	--	ND	0.085	--		1
1,1,2,2-Tetrachloroethane	ND	0.020	--	ND	0.137	--		1
o-Xylene	ND	0.020	--	ND	0.087	--		1
Isopropylbenzene	ND	0.200	--	ND	0.983	--		1
4-Ethyltoluene	ND	0.020	--	ND	0.098	--		1
1,3,5-Trimethybenzene	ND	0.020	--	ND	0.098	--		1
1,2,4-Trimethylbenzene	ND	0.020	--	ND	0.098	--		1
1,3-Dichlorobenzene	ND	0.020	--	ND	0.120	--		1
1,4-Dichlorobenzene	ND	0.020	--	ND	0.120	--		1
sec-Butylbenzene	ND	0.200	--	ND	1.10	--		1
p-Isopropyltoluene	ND	0.200	--	ND	1.10	--		1
1,2-Dichlorobenzene	ND	0.020	--	ND	0.120	--		1

Project Name: BATCH CANISTER CERTIFICATION **Lab Number:** L1522261

Project Number: CANISTER QC BAT **Report Date:** 09/21/15

Air Canister Certification Results

Lab ID: L1522261-01 Date Collected: 09/09/15 16:00

Client ID: CAN 1728 SHELF 1 Date Received: 09/10/15

Sample Location: Field Prep: Not Specified

Parameter	ppbV Results	ppbV RL	ppbV MDL	ug/m3 Results	ug/m3 RL	ug/m3 MDL	Qualifier	Dilution Factor
Volatile Organics in Air by SIM - Mansfield Lab								
n-Butylbenzene	ND	0.200	--	ND	1.10	--		1
1,2,4-Trichlorobenzene	ND	0.050	--	ND	0.371	--		1
Naphthalene	ND	0.050	--	ND	0.262	--		1
1,2,3-Trichlorobenzene	ND	0.050	--	ND	0.371	--		1
Hexachlorobutadiene	ND	0.050	--	ND	0.533	--		1

Internal Standard	% Recovery	Qualifier	Acceptance Criteria
1,4-difluorobenzene	97		60-140
bromochloromethane	96		60-140
chlorobenzene-d5	98		60-140

Project Name: NBHS IRA O&M
Project Number: 115058

Lab Number: L1522608
Report Date: 09/21/15

Sample Receipt and Container Information

Were project specific reporting limits specified? YES

Reagent H2O Preserved Vials Frozen on: NA

Cooler Information **Custody Seal**

Cooler	
N/A	Absent

Container Information

Container ID	Container Type	Cooler	pH	Temp deg C	Pres	Seal	Analysis(*)
L1522608-01A	Canister - 2.7 Liter	N/A	N/A		Y	Absent	MCP-TO15(30)
L1522608-02A	Canister - 2.7 Liter	N/A	N/A		Y	Absent	MCP-TO15-SIM(30)

*Values in parentheses indicate holding time in days

Project Name:	NBHS IRA O&M	**Lab Number:**	L1522608
Project Number:	115058	**Report Date:**	09/21/15

GLOSSARY

Acronyms

EDL	- Estimated Detection Limit: This value represents the level to which target analyte concentrations are reported as estimated values, when those target analyte concentrations are quantified below the reporting limit (RL). The EDL includes any adjustments from dilutions, concentrations or moisture content, where applicable. The use of EDLs is specific to the analysis of PAHs using Solid-Phase Microextraction (SPME).
EPA	- Environmental Protection Agency.
LCS	- Laboratory Control Sample: A sample matrix, free from the analytes of interest, spiked with verified known amounts of analytes or a material containing known and verified amounts of analytes.
LCSD	- Laboratory Control Sample Duplicate: Refer to LCS.
LFB	- Laboratory Fortified Blank: A sample matrix, free from the analytes of interest, spiked with verified known amounts of analytes or a material containing known and verified amounts of analytes.
MDL	- Method Detection Limit: This value represents the level to which target analyte concentrations are reported as estimated values, when those target analyte concentrations are quantified below the reporting limit (RL). The MDL includes any adjustments from dilutions, concentrations or moisture content, where applicable.
MS	- Matrix Spike Sample: A sample prepared by adding a known mass of target analyte to a specified amount of matrix sample for which an independent estimate of target analyte concentration is available.
MSD	- Matrix Spike Sample Duplicate: Refer to MS.
NA	- Not Applicable.
NC	- Not Calculated: Term is utilized when one or more of the results utilized in the calculation are non-detect at the parameter's reporting unit.
NI	- Not Ignitable.
NP	- Non-Plastic: Term is utilized for the analysis of Atterberg Limits in soil.
RL	- Reporting Limit: The value at which an instrument can accurately measure an analyte at a specific concentration. The RL includes any adjustments from dilutions, concentrations or moisture content, where applicable.
RPD	- Relative Percent Difference: The results from matrix and/or matrix spike duplicates are primarily designed to assess the precision of analytical results in a given matrix and are expressed as relative percent difference (RPD). Values which are less than five times the reporting limit for any individual parameter are evaluated by utilizing the absolute difference between the values; although the RPD value will be provided in the report.
SRM	- Standard Reference Material: A reference sample of a known or certified value that is of the same or similar matrix as the associated field samples.
TIC	- Tentatively Identified Compound: A compound that has been identified to be present and is not part of the target compound list (TCL) for the method and/or program. All TICs are qualitatively identified and reported as estimated concentrations.

Footnotes

1	- The reference for this analyte should be considered modified since this analyte is absent from the target analyte list of the original method.

Terms

Total: With respect to Organic analyses, a 'Total' result is defined as the summation of results for individual isomers or Aroclors. If a 'Total' result is requested, the results of its individual components will also be reported. This is applicable to 'Total' results for methods 8260, 8081 and 8082.

Analytical Method: Both the document from which the method originates and the analytical reference method. (Example: EPA 8260B is shown as 1,8260B.) The codes for the reference method documents are provided in the References section of the Addendum.

Data Qualifiers

A	- Spectra identified as "Aldol Condensation Product".
B	- The analyte was detected above the reporting limit in the associated method blank. Flag only applies to associated field samples that have detectable concentrations of the analyte at less than ten times (10x) the concentration found in the blank. For MCP-related projects, flag only applies to associated field samples that have detectable concentrations of the analyte at less than ten times (10x) the concentration found in the blank. For DOD-related projects, flag only applies to associated field samples that have detectable concentrations of the analyte at less than ten times (10x) the concentration found in the blank AND the analyte was detected above one-half the reporting limit (or above the reporting limit for common lab contaminants) in the associated method blank. For NJ-Air-related projects, flag only applies to associated field samples that have detectable concentrations of the analyte above the reporting limit. For NJ-related projects (excluding Air), flag only applies to associated field samples that have detectable concentrations of the analyte, which was detected above the reporting limit in the associated method blank or above five times the reporting limit for common lab contaminants (Phthalates, Acetone, Methylene Chloride, 2-Butanone).
C	- Co-elution: The target analyte co-elutes with a known lab standard (i.e. surrogate, internal standards, etc.) for co-extracted analyses.

Report Format: Data Usability Report

Project Name:	NBHS IRA O&M	**Lab Number:**	L1522608
Project Number:	115058	**Report Date:**	09/21/15

Data Qualifiers

D - Concentration of analyte was quantified from diluted analysis. Flag only applies to field samples that have detectable concentrations of the analyte.

E - Concentration of analyte exceeds the range of the calibration curve and/or linear range of the instrument.

G - The concentration may be biased high due to matrix interferences (i.e, co-elution) with non-target compound(s). The result should be considered estimated.

H - The analysis of pH was performed beyond the regulatory-required holding time of 15 minutes from the time of sample collection.

I - The lower value for the two columns has been reported due to obvious interference.

M - Reporting Limit (RL) exceeds the MCP CAM Reporting Limit for this analyte.

NJ - Presumptive evidence of compound. This represents an estimated concentration for Tentatively Identified Compounds (TICs), where the identification is based on a mass spectral library search.

P - The RPD between the results for the two columns exceeds the method-specified criteria.

Q - The quality control sample exceeds the associated acceptance criteria. For DOD-related projects, LCS and/or Continuing Calibration Standard exceedences are also qualified on all associated sample results. Note: This flag is not applicable for matrix spike recoveries when the sample concentration is greater than 4x the spike added or for batch duplicate RPD when the sample concentrations are less than 5x the RL. (Metals only.)

R - Analytical results are from sample re-analysis.

RE - Analytical results are from sample re-extraction.

S - Analytical results are from modified screening analysis.

J - Estimated value. This represents an estimated concentration for Tentatively Identified Compounds (TICs).

ND - Not detected at the reporting limit (RL) for the sample.

Report Format: Data Usability Report

Project Name: NBHS IRA O&M **Lab Number:** L1522608
Project Number: 115058 **Report Date:** 09/21/15

REFERENCES

101 Compendium of Methods for the Determination of Toxic Organic Compounds in Ambient Air (EPA/625/R-96/010b:January 1999) with QC Requirements & Performance Standards for the Analysis of TO-15 under the Massachusetts Contingency Plan, WSC-CAM-IXB, July 2010.

LIMITATION OF LIABILITIES

Alpha Analytical performs services with reasonable care and diligence normal to the analytical testing laboratory industry. In the event of an error, the sole and exclusive responsibility of Alpha Analytical shall be to re-perform the work at it's own expense. In no event shall Alpha Analytical be held liable for any incidental, consequential or special damages, including but not limited to, damages in any way connected with the use of, interpretation of, information or analysis provided by Alpha Analytical.

We strongly urge our clients to comply with EPA protocol regarding sample volume, preservation, cooling, containers, sampling procedures, holding time and splitting of samples in the field.

Certification Information

Last revised December 16, 2014

The following analytes are not included in our NELAP Scope of Accreditation:

Westborough Facility
EPA 524.2: Acetone, 2-Butanone (Methyl ethyl ketone (MEK)), Tert-butyl alcohol, 2-Hexanone, Tetrahydrofuran, 1,3,5-Trichlorobenzene, 4-Methyl-2-pentanone (MIBK), Carbon disulfide, Diethyl ether.
EPA 8260C: 1,2,4,5-Tetramethylbenzene, 4-Ethyltoluene, Iodomethane (methyl iodide), Methyl methacrylate, Azobenzene.
EPA 8270D: 1-Methylnaphthalene, Dimethylnaphthalene,1,4-Diphenylhydrazine.
EPA 625: 4-Chloroaniline, 4-Methylphenol.
SM4500: Soil: Total Phosphorus, TKN, NO2, NO3.
EPA 9071: Total Petroleum Hydrocarbons, Oil & Grease.

Mansfield Facility
EPA 8270D: Biphenyl.
EPA 2540D: TSS
EPA TO-15: Halothane, 2,4,4-Trimethyl-2-pentene, 2,4,4-Trimethyl-1-pentene, Thiophene, 2-Methylthiophene, 3-Methylthiophene, 2-Ethylthiophene, 1,2,3-Trimethylbenzene, Indan, Indene, 1,2,4,5-Tetramethylbenzene, Benzothiophene, 1-Methylnaphthalene.

The following analytes are included in our Massachusetts DEP Scope of Accreditation, Westborough Facility:

Drinking Water
EPA 200.8: Sb,As,Ba,Be,Cd,Cr,Cu,Pb,Ni,Se,Tl; **EPA 200.7**: Ba,Be,Ca,Cd,Cr,Cu,Na; **EPA 245.1:** Mercury;
EPA 300.0: Nitrate-N, Fluoride, Sulfate; **EPA 353.2**: Nitrate-N, Nitrite-N; **SM4500NO3-F**: Nitrate-N, Nitrite-N; **SM4500F-C, SM4500CN-CE, EPA 180.1, SM2130B, SM4500Cl-D, SM2320B, SM2540C, SM4500H-B**
EPA 332: Perchlorate.
Microbiology: **SM9215B; SM9223-P/A, SM9223B-Colilert-QT, Enterolert-QT.**

Non-Potable Water
EPA 200.8: Al,Sb,As,Be,Cd,Cr,Cu,Pb,Mn,Ni,Se,Ag,Tl,Zn;
EPA 200.7: Al,Sb,As,Be,Cd,Ca,Cr,Co,Cu,Fe,Pb,Mg,Mn,Mo,Ni,K,Se,Ag,Na,Sr,Ti,Tl,V,Zn;
EPA 245.1, SM4500H,B, EPA 120.1, SM2510B, SM2540C, SM2340B, SM2320B, SM4500CL-E, SM4500F-BC, SM426C, SM4500NH3-BH, **EPA 350.1**: Ammonia-N, **LACHAT 10-107-06-1-B**: Ammonia-N, **SM4500NO3-F,**
EPA 353.2: Nitrate-N**, SM4500NH3-BC-NES, EPA 351.1, SM4500P-E, SM4500P-B, E, SM5220D, EPA 410.4, SM5210B, SM5310C, SM4500CL-D, EPA 1664, SM14 510AC, EPA 420.1, SM4500-CN-CE, SM2540D.**
EPA 624: Volatile Halocarbons & Aromatics,
EPA 608: Chlordane, Toxaphene, Aldrin, alpha-BHC, beta-BHC, gamma-BHC, delta-BHC, Dieldrin, DDD, DDE, DDT, Endosulfan I, Endosulfan II, Endosulfan sulfate, Endrin, Endrin Aldehyde, Heptachlor, Heptachlor Epoxide, PCBs
EPA 625: SVOC (Acid/Base/Neutral Extractables), **EPA 600/4-81-045**: PCB-Oil.
Microbiology: **SM9223B-Colilert-QT; Enterolert-QT, SM9222D-MF**.

For a complete listing of analytes and methods, please contact your Alpha Project Manager.

AIR ANALYSIS

PAGE 1 OF 1

CHAIN OF CUSTODY

ALPHA ANALYTICAL
320 Forbes Blvd, Mansfield, MA 02048
TEL: 508-822-9300 FAX: 508-822-3288

Date Rec'd in Lab: 9/14/15

ALPHA Job #: L1522608

Client Information

Client: TRC
Address: 650 SUFFOLK ST
LOWELL MA
Phone: 978-970-5600
Fax:
Email:
☐ These samples have been previously analyzed by Alpha

Project Information

Project Name: NBHS IRA O&M
Project Location: NEW BEDFORD MA
Project #: 115058
Project Manager: D. SULLIVAN
ALPHA Quote #:

Turn-Around Time

☑ Standard ☐ RUSH (only confirmed if pre-approved!)
Date Due: 9/22 Time:

Report Information - Data Deliverables

☐ FAX
☑ ADEx
Criteria Checker:
(Default based on Regulatory Criteria Indicated)
Other Formats:
☑ EMAIL (standard pdf report)
☐ Additional Deliverables:
Report to: (if different than Project Manager)

Billing Information

☐ Same as Client info PO #: 115058

Regulatory Requirements/Report Limits

State/Fed	Program	Criteria

Other Project Specific Requirements/Comments:

All Columns Below Must Be Filled Out

ALPHA Lab ID (Lab Use Only)	Sample ID	Collection Date	Start Time	End Time	Initial Vacuum	Final Vacuum	Sample Matrix*	Sampler's Initials	Can Size	I D Can	I D - Flow Controller	TO-14A by TO-15	TO-15	TO-15 SIM	APH	FIXED GASES	TO-13A	TO-4 / TO-10	Sample Comments (i.e. PID)
22608-01	VAPOR INLET	9/14/15	13:46	13:58	-29.5	-2.5	SV	JF	2.7L	121	0684		✓						
-02	VAPOR OUTLET	"	13:48	14:00	-29.6	-2.95	O	JF	2.7L	341	0572			✓					

*SAMPLE MATRIX CODES
AA = Ambient Air (Indoor/Outdoor)
SV = Soil Vapor/Landfill Gas/SVE
Other = Please Specify

Container Type: 6S 6S

Relinquished By:	Date/Time	Received By:	Date/Time:
[signature]	9/14/15	[signature] -AAL	9/14/15 1546

Please print clearly, legibly and completely. Samples can not be logged in and turnaround time clock will not start until any ambiguities are resolved. All samples submitted are subject to Alpha's Terms and Conditions. See reverse side.

Form No: 101-02 (19-Jun-09)

ANALYTICAL REPORT

Lab Number:	L1522769
Client:	TRC Environmental Consultants Wannalancit Mills 650 Suffolk Street Lowell, MA 01854
ATTN:	David Sullivan
Phone:	(978) 656-3565
Project Name:	NBHS IRA O&M
Project Number:	115058
Report Date:	09/25/15

The original project report/data package is held by Alpha Analytical. This report/data package is paginated and should be reproduced only in its entirety. Alpha Analytical holds no responsibility for results and/or data that are not consistent with the original.

Certifications & Approvals: NY (11627), CT (PH-0141), NH (2206), NJ NELAP (MA015), RI (LAO00299), ME (MA00030), PA (68-02089), VA (460194), LA NELAP (03090), FL (E87814), TX (T104704419), WA (C954), USFWS (Permit #LE2069641), USDA (Permit #P330-11-00109), US Army Corps of Engineers.

320 Forbes Boulevard, Mansfield, MA 02048-1806
508-822-9300 (Fax) 508-822-3288 800-624-9220 - www.alphalab.com

Project Name: NBHS IRA O&M
Project Number: 115058

Lab Number: L1522769
Report Date: 09/25/15

Alpha Sample ID	Client ID	Matrix	Sample Location	Collection Date/Time	Receive Date
L1522769-01	VAPOR INLET	AIR MEDIA	NEW BEDFORD, MA	09/14/15 14:07	09/15/15
L1522769-02	VAPOR OUTLET	AIR MEDIA	NEW BEDFORD, MA	09/14/15 14:13	09/15/15

Project Name: NBHS IRA O&M
Project Number: 115058
Lab Number: L1522769
Report Date: 09/25/15

Case Narrative

The samples were received in accordance with the Chain of Custody and no significant deviations were encountered during the preparation or analysis unless otherwise noted. Sample Receipt, Container Information, and the Chain of Custody are located at the back of the report.

Results contained within this report relate only to the samples submitted under this Alpha Lab Number and meet all of the requirements of NELAC, for all NELAC accredited parameters. The data presented in this report is organized by parameter (i.e. VOC, SVOC, etc.). Sample specific Quality Control data (i.e. Surrogate Spike Recovery) is reported at the end of the target analyte list for each individual sample, followed by the Laboratory Batch Quality Control at the end of each parameter. Tentatively Identified Compounds (TICs), if requested, are reported for compounds identified to be present and are not part of the method/program Target Compound List, even if only a subset of the TCL are being reported. If a sample was re-analyzed or re-extracted due to a required quality control corrective action and if both sets of data are reported, the Laboratory ID of the re-analysis or re-extraction is designated with an "R" or "RE", respectively. When multiple Batch Quality Control elements are reported (e.g. more than one LCS), the associated samples for each element are noted in the grey shaded header line of each data table. Any Laboratory Batch, Sample Specific % recovery or RPD value that is outside the listed Acceptance Criteria is bolded in the report. All specific QC information is also incorporated in the Data Usability format of our Data Merger tool where it can be reviewed along with any associated usability implications. Soil/sediments, solids and tissues are reported on a dry weight basis unless otherwise noted. Definitions of all data qualifiers and acronyms used in this report are provided in the Glossary located at the back of the report.

In reference to questions H (CAM) or 4 (RCP) when "NO" is checked, the performance criteria for CAM and RCP methods allow for some quality control failures to occur and still be within method compliance. In these instances the specific failure is not narrated but noted in the associated QC table. The information is also incorporated in the Data Usability format of our Data Merger tool where it can be reviewed along with any associated usability implications.

Please see the associated ADEx data file for a comparison of laboratory reporting limits that were achieved with the regulatory Numerical Standards requested on the Chain of Custody.

HOLD POLICY
For samples submitted on hold, Alpha's policy is to hold samples (with the exception of Air canisters) free of charge for 21 calendar days from the date the project is completed. After 21 calendar days, we will dispose of all samples submitted including those put on hold unless you have contacted your Client Service Representative and made arrangements for Alpha to continue to hold the samples. Air canisters will be disposed after 3 business days from the date the project is completed.

Please contact Client Services at 800-624-9220 with any questions.

Project Name: NBHS IRA O&M
Project Number: 115058

Lab Number: L1522769
Report Date: 09/25/15

Case Narrative (continued)

PCB Aroclors in Air

I, the undersigned, attest under the pains and penalties of perjury that, to the best of my knowledge and belief and based upon my personal inquiry of those responsible for providing the information contained in this analytical report, such information is accurate and complete. This certificate of analysis is not complete unless this page accompanies any and all pages of this report.

Authorized Signature: Christopher J. Anderson

Title: Technical Director/Representative

Date: 09/25/15

AIR

Project Name: NBHS IRA O&M

Project Number: 115058

Lab Number: L1522769

Report Date: 09/25/15

SAMPLE RESULTS

Lab ID: L1522769-01
Client ID: VAPOR INLET
Sample Location: NEW BEDFORD, MA
Matrix: Air Media
Analytical Method: 48,TO-10A
Analytical Date: 09/18/15 15:20
Analyst: NS

Date Collected: 09/14/15 14:07
Date Received: 09/15/15
Field Prep: Not Specified
Extraction Method: EPA 3540C
Extraction Date: 09/17/15 12:26

Parameter	Result	Qualifier	Units	RL	MDL	Dilution Factor	Column
PCB Aroclors in Air - Mansfield Lab							
Aroclor 1016	ND		ng/cart	30.0	--	1	A
Aroclor 1221	ND		ng/cart	100	--	1	A
Aroclor 1232	ND		ng/cart	30.0	--	1	A
Aroclor 1242	ND		ng/cart	20.0	--	1	A
Aroclor 1248	4000	E	ng/cart	20.0	--	1	B
Aroclor 1254	ND		ng/cart	20.0	--	1	A
Aroclor 1260	ND		ng/cart	20.0	--	1	A
Aroclor 1262	ND		ng/cart	20.0	--	1	A
Aroclor 1268	ND		ng/cart	20.0	--	1	A

Surrogate	% Recovery	Qualifier	Acceptance Criteria	Column
Tetrachloro-meta-Xylene	76		60-120	A
Decachlorobiphenyl	77		60-120	A
Tetrachloro-meta-Xylene	80		60-120	B
Decachlorobiphenyl	90		60-120	B

Project Name: NBHS IRA O&M

Project Number: 115058

Lab Number: L1522769

Report Date: 09/25/15

SAMPLE RESULTS

Lab ID:	L1522769-01	D	Date Collected:	09/14/15 14:07
Client ID:	VAPOR INLET		Date Received:	09/15/15
Sample Location:	NEW BEDFORD, MA		Field Prep:	Not Specified
Matrix:	Air Media		Extraction Method:	EPA 3540C
Analytical Method:	48,TO-10A		Extraction Date:	09/17/15 12:26
Analytical Date:	09/24/15 16:54			
Analyst:	NS			

Parameter	Result	Qualifier	Units	RL	MDL	Dilution Factor	Column
PCB Aroclors in Air - Mansfield Lab							
Aroclor 1248	4440		ng/cart	100	--	5	B

Surrogate	% Recovery	Qualifier	Acceptance Criteria	Column
Tetrachloro-meta-Xylene	97		60-120	A
Decachlorobiphenyl	99		60-120	A
Tetrachloro-meta-Xylene	90		60-120	B
Decachlorobiphenyl	101		60-120	B

Project Name: NBHS IRA O&M

Project Number: 115058

Lab Number: L1522769

Report Date: 09/25/15

SAMPLE RESULTS

Lab ID: L1522769-02
Client ID: VAPOR OUTLET
Sample Location: NEW BEDFORD, MA
Matrix: Air Media
Analytical Method: 48,TO-10A
Analytical Date: 09/18/15 15:50
Analyst: NS

Date Collected: 09/14/15 14:13
Date Received: 09/15/15
Field Prep: Not Specified
Extraction Method: EPA 3540C
Extraction Date: 09/17/15 12:26

Parameter	Result	Qualifier	Units	RL	MDL	Dilution Factor	Column
PCB Aroclors in Air - Mansfield Lab							
Aroclor 1016	ND		ng/cart	30.0	--	1	A
Aroclor 1221	ND		ng/cart	100	--	1	A
Aroclor 1232	ND		ng/cart	30.0	--	1	A
Aroclor 1242	ND		ng/cart	20.0	--	1	A
Aroclor 1248	ND		ng/cart	20.0	--	1	A
Aroclor 1254	ND		ng/cart	20.0	--	1	A
Aroclor 1260	ND		ng/cart	20.0	--	1	A
Aroclor 1262	ND		ng/cart	20.0	--	1	A
Aroclor 1268	ND		ng/cart	20.0	--	1	A

Surrogate	% Recovery	Qualifier	Acceptance Criteria	Column
Tetrachloro-meta-Xylene	65		60-120	A
Decachlorobiphenyl	63		60-120	A
Tetrachloro-meta-Xylene	66		60-120	B
Decachlorobiphenyl	73		60-120	B

Project Name: NBHS IRA O&M
Project Number: 115058

Lab Number: L1522769
Report Date: 09/25/15

Method Blank Analysis
Batch Quality Control

Analytical Method: 48,TO-10A
Analytical Date: 09/18/15 14:19
Analyst: NS

Extraction Method: EPA 3540C
Extraction Date: 09/17/15 12:26

Parameter	Result	Qualifier	Units	RL	MDL	Column
PCB Aroclors in Air - Mansfield Lab for sample(s): 01-02 Batch: WG822282-1						
Aroclor 1016	ND		ng/cart	30.0	--	A
Aroclor 1221	ND		ng/cart	100	--	A
Aroclor 1232	ND		ng/cart	30.0	--	A
Aroclor 1242	ND		ng/cart	20.0	--	A
Aroclor 1248	ND		ng/cart	20.0	--	A
Aroclor 1254	ND		ng/cart	20.0	--	A
Aroclor 1260	ND		ng/cart	20.0	--	A
Aroclor 1262	ND		ng/cart	20.0	--	A
Aroclor 1268	ND		ng/cart	20.0	--	A

Surrogate	%Recovery	Qualifier	Acceptance Criteria	Column
Tetrachloro-meta-Xylene	72		60-120	A
Decachlorobiphenyl	76		60-120	A
Tetrachloro-meta-Xylene	78		60-120	B
Decachlorobiphenyl	81		60-120	B

Lab Control Sample Analysis
Batch Quality Control

Project Name: NBHS IRA O&M
Project Number: 115058

Lab Number: L1522769
Report Date: 09/25/15

Parameter	LCS %Recovery	Qual	LCSD %Recovery	Qual	%Recovery Limits	RPD	Qual	RPD Limits	Column
PCB Aroclors in Air - Mansfield Lab Associated sample(s): 01-02 Batch: WG822282-2									
Aroclor 1016	75		-		40-140	-		50	A
Aroclor 1260	81		-		40-140	-		50	A

Surrogate	LCS %Recovery	Qual	LCSD %Recovery	Qual	Acceptance Criteria	Column
Tetrachloro-meta-Xylene	84				60-120	A
Decachlorobiphenyl	86				60-120	A
Tetrachloro-meta-Xylene	89				60-120	B
Decachlorobiphenyl	93				60-120	B

Project Name: NBHS IRA O&M
Project Number: 115058

Lab Number: L1522769
Report Date: 09/25/15

Sample Receipt and Container Information

Were project specific reporting limits specified? YES

Reagent H2O Preserved Vials Frozen on: NA

Cooler Information Custody Seal

Cooler	
A	Absent

Container Information

Container ID	Container Type	Cooler	pH	Temp deg C	Pres	Seal	Analysis(*)
L1522769-01A	PUF Air Cartridge - High or Low	A	N/A	5.9	Y	Absent	A2-TO10-AROCLOR(7)
L1522769-02A	PUF Air Cartridge - High or Low	A	N/A	5.9	Y	Absent	A2-TO10-AROCLOR(7)

*Values in parentheses indicate holding time in days

Project Name:	NBHS IRA O&M	**Lab Number:**	L1522769
Project Number:	115058	**Report Date:**	09/25/15

GLOSSARY

Acronyms

EDL	- Estimated Detection Limit: This value represents the level to which target analyte concentrations are reported as estimated values, when those target analyte concentrations are quantified below the reporting limit (RL). The EDL includes any adjustments from dilutions, concentrations or moisture content, where applicable. The use of EDLs is specific to the analysis of PAHs using Solid-Phase Microextraction (SPME).
EPA	- Environmental Protection Agency.
LCS	- Laboratory Control Sample: A sample matrix, free from the analytes of interest, spiked with verified known amounts of analytes or a material containing known and verified amounts of analytes.
LCSD	- Laboratory Control Sample Duplicate: Refer to LCS.
LFB	- Laboratory Fortified Blank: A sample matrix, free from the analytes of interest, spiked with verified known amounts of analytes or a material containing known and verified amounts of analytes.
MDL	- Method Detection Limit: This value represents the level to which target analyte concentrations are reported as estimated values, when those target analyte concentrations are quantified below the reporting limit (RL). The MDL includes any adjustments from dilutions, concentrations or moisture content, where applicable.
MS	- Matrix Spike Sample: A sample prepared by adding a known mass of target analyte to a specified amount of matrix sample for which an independent estimate of target analyte concentration is available.
MSD	- Matrix Spike Sample Duplicate: Refer to MS.
NA	- Not Applicable.
NC	- Not Calculated: Term is utilized when one or more of the results utilized in the calculation are non-detect at the parameter's reporting unit.
NI	- Not Ignitable.
NP	- Non-Plastic: Term is utilized for the analysis of Atterberg Limits in soil.
RL	- Reporting Limit: The value at which an instrument can accurately measure an analyte at a specific concentration. The RL includes any adjustments from dilutions, concentrations or moisture content, where applicable.
RPD	- Relative Percent Difference: The results from matrix and/or matrix spike duplicates are primarily designed to assess the precision of analytical results in a given matrix and are expressed as relative percent difference (RPD). Values which are less than five times the reporting limit for any individual parameter are evaluated by utilizing the absolute difference between the values; although the RPD value will be provided in the report.
SRM	- Standard Reference Material: A reference sample of a known or certified value that is of the same or similar matrix as the associated field samples.
TIC	- Tentatively Identified Compound: A compound that has been identified to be present and is not part of the target compound list (TCL) for the method and/or program. All TICs are qualitatively identified and reported as estimated concentrations.

Footnotes

1	- The reference for this analyte should be considered modified since this analyte is absent from the target analyte list of the original method.

Terms

Total: With respect to Organic analyses, a 'Total' result is defined as the summation of results for individual isomers or Aroclors. If a 'Total' result is requested, the results of its individual components will also be reported. This is applicable to 'Total' results for methods 8260, 8081 and 8082.

Analytical Method: Both the document from which the method originates and the analytical reference method. (Example: EPA 8260B is shown as 1,8260B.) The codes for the reference method documents are provided in the References section of the Addendum.

Data Qualifiers

A	- Spectra identified as "Aldol Condensation Product".
B	- The analyte was detected above the reporting limit in the associated method blank. Flag only applies to associated field samples that have detectable concentrations of the analyte at less than ten times (10x) the concentration found in the blank. For MCP-related projects, flag only applies to associated field samples that have detectable concentrations of the analyte at less than ten times (10x) the concentration found in the blank. For DOD-related projects, flag only applies to associated field samples that have detectable concentrations of the analyte at less than ten times (10x) the concentration found in the blank AND the analyte was detected above one-half the reporting limit (or above the reporting limit for common lab contaminants) in the associated method blank. For NJ-Air-related projects, flag only applies to associated field samples that have detectable concentrations of the analyte above the reporting limit. For NJ-related projects (excluding Air), flag only applies to associated field samples that have detectable concentrations of the analyte, which was detected above the reporting limit in the associated method blank or above five times the reporting limit for common lab contaminants (Phthalates, Acetone, Methylene Chloride, 2-Butanone).
C	- Co-elution: The target analyte co-elutes with a known lab standard (i.e. surrogate, internal standards, etc.) for co-extracted analyses.

Report Format: Data Usability Report

Project Name:	NBHS IRA O&M	**Lab Number:**	L1522769
Project Number:	115058	**Report Date:**	09/25/15

Data Qualifiers

D - Concentration of analyte was quantified from diluted analysis. Flag only applies to field samples that have detectable concentrations of the analyte.

E - Concentration of analyte exceeds the range of the calibration curve and/or linear range of the instrument.

G - The concentration may be biased high due to matrix interferences (i.e, co-elution) with non-target compound(s). The result should be considered estimated.

H - The analysis of pH was performed beyond the regulatory-required holding time of 15 minutes from the time of sample collection.

I - The lower value for the two columns has been reported due to obvious interference.

M - Reporting Limit (RL) exceeds the MCP CAM Reporting Limit for this analyte.

NJ - Presumptive evidence of compound. This represents an estimated concentration for Tentatively Identified Compounds (TICs), where the identification is based on a mass spectral library search.

P - The RPD between the results for the two columns exceeds the method-specified criteria.

Q - The quality control sample exceeds the associated acceptance criteria. For DOD-related projects, LCS and/or Continuing Calibration Standard exceedences are also qualified on all associated sample results. Note: This flag is not applicable for matrix spike recoveries when the sample concentration is greater than 4x the spike added or for batch duplicate RPD when the sample concentrations are less than 5x the RL. (Metals only.)

R - Analytical results are from sample re-analysis.

RE - Analytical results are from sample re-extraction.

S - Analytical results are from modified screening analysis.

J - Estimated value. This represents an estimated concentration for Tentatively Identified Compounds (TICs).

ND - Not detected at the reporting limit (RL) for the sample.

Report Format: Data Usability Report

REFERENCES

48 Compendium of Methods for the Determination of Toxic Organic Compounds in Ambient Air. Second Edition. EPA/625/R-96/010b, January 1999.

LIMITATION OF LIABILITIES

Alpha Analytical performs services with reasonable care and diligence normal to the analytical testing laboratory industry. In the event of an error, the sole and exclusive responsibility of Alpha Analytical shall be to re-perform the work at it's own expense. In no event shall Alpha Analytical be held liable for any incidental, consequential or special damages, including but not limited to, damages in any way connected with the use of, interpretation of, information or analysis provided by Alpha Analytical.

We strongly urge our clients to comply with EPA protocol regarding sample volume, preservation, cooling, containers, sampling procedures, holding time and splitting of samples in the field.

Certification Information

Last revised December 16, 2014

The following analytes are not included in our NELAP Scope of Accreditation:

Westborough Facility
EPA 524.2: Acetone, 2-Butanone (Methyl ethyl ketone (MEK)), Tert-butyl alcohol, 2-Hexanone, Tetrahydrofuran, 1,3,5-Trichlorobenzene, 4-Methyl-2-pentanone (MIBK), Carbon disulfide, Diethyl ether.
EPA 8260C: 1,2,4,5-Tetramethylbenzene, 4-Ethyltoluene, Iodomethane (methyl iodide), Methyl methacrylate, Azobenzene.
EPA 8270D: 1-Methylnaphthalene, Dimethylnaphthalene,1,4-Diphenylhydrazine.
EPA 625: 4-Chloroaniline, 4-Methylphenol.
SM4500: Soil: Total Phosphorus, TKN, NO2, NO3.
EPA 9071: Total Petroleum Hydrocarbons, Oil & Grease.

Mansfield Facility
EPA 8270D: Biphenyl.
EPA 2540D: TSS
EPA TO-15: Halothane, 2,4,4-Trimethyl-2-pentene, 2,4,4-Trimethyl-1-pentene, Thiophene, 2-Methylthiophene, 3-Methylthiophene, 2-Ethylthiophene, 1,2,3-Trimethylbenzene, Indan, Indene, 1,2,4,5-Tetramethylbenzene, Benzothiophene, 1-Methylnaphthalene.

The following analytes are included in our Massachusetts DEP Scope of Accreditation, Westborough Facility:

Drinking Water
EPA 200.8: Sb,As,Ba,Be,Cd,Cr,Cu,Pb,Ni,Se,Tl; **EPA 200.7**: Ba,Be,Ca,Cd,Cr,Cu,Na; **EPA 245.1:** Mercury;
EPA 300.0: Nitrate-N, Fluoride, Sulfate; **EPA 353.2**: Nitrate-N, Nitrite-N; **SM4500NO3-F**: Nitrate-N, Nitrite-N; **SM4500F-C, SM4500CN-CE, EPA 180.1, SM2130B, SM4500Cl-D, SM2320B, SM2540C, SM4500H-B**
EPA 332: Perchlorate.
Microbiology: **SM9215B; SM9223-P/A, SM9223B-Colilert-QT, Enterolert-QT.**

Non-Potable Water
EPA 200.8: Al,Sb,As,Be,Cd,Cr,Cu,Pb,Mn,Ni,Se,Ag,Tl,Zn;
EPA 200.7: Al,Sb,As,Be,Cd,Ca,Cr,Co,Cu,Fe,Pb,Mg,Mn,Mo,Ni,K,Se,Ag,Na,Sr,Ti,Tl,V,Zn;
EPA 245.1, SM4500H,B, EPA 120.1, SM2510B, SM2540C, SM2340B, SM2320B, SM4500CL-E, SM4500F-BC, SM426C, SM4500NH3-BH, **EPA 350.1**: Ammonia-N, **LACHAT 10-107-06-1-B**: Ammonia-N, **SM4500NO3-F,**
EPA 353.2: Nitrate-N**, SM4500NH3-BC-NES, EPA 351.1, SM4500P-E, SM4500P-B, E, SM5220D, EPA 410.4, SM5210B, SM5310C, SM4500CL-D, EPA 1664, SM14 510AC, EPA 420.1, SM4500-CN-CE, SM2540D.**
EPA 624: Volatile Halocarbons & Aromatics,
EPA 608: Chlordane, Toxaphene, Aldrin, alpha-BHC, beta-BHC, gamma-BHC, delta-BHC, Dieldrin, DDD, DDE, DDT, Endosulfan I, Endosulfan II, Endosulfan sulfate, Endrin, Endrin Aldehyde, Heptachlor, Heptachlor Epoxide, PCBs
EPA 625: SVOC (Acid/Base/Neutral Extractables), **EPA 600/4-81-045**: PCB-Oil.
Microbiology: **SM9223B-Colilert-QT; Enterolert-QT, SM9222D-MF**.

For a complete listing of analytes and methods, please contact your Alpha Project Manager.

AIR ANALYSIS - SORBENT MEDIA
CHAIN OF CUSTODY

Page of

Date Rec'd in Lab 9/15/15

ALPHA Job # L1522769

Westborough, MA TEL: 508-898-9220 FAX: 508-822-3288
Mansfield, MA TEL: 508-822-9300 508-822-3288

Client Information
Client: TRC
Address: 140 SUFFOLK ST
LOWELL MA
Phone: 978-970-5600
Fax:
Email:

Project Information
Project Name: NBHS IRA O&M
Project Location: NEW BEDFORD MA
Project # 115058
(Use Project name as Project #) ☐
Project Manager: DAVID SULLIVAN
ALPHA Quote #:

Turn-Around Time
Standard ☑ Due Date: 9/23
Rush (only if pre approved) ☐ Time:

Report Information - Data Deliverables
☐ FAX
☑ ADEx
Criteria Checker:
Other Formats:
☑ EMAIL
☐ Add'l Deliverables
Report to: (if different than Project Manager)

Billing Information
☐ Same as Client Info
PO # C115058

Regulatory Requirements/Report Limits

State/Fed	Program	Criteria

These samples have been previously analyzed by Alpha ☐

Other Project Specific Requirements/ Comments/Detection Limits

For PCBs, selection is REQUIRED:
☐ Congeners
☐ Homologs
☑ Aroclors (Low Vol only)

ANALYSIS

NOTE: For metals, please specify elements of interest and media type.
☐ PM-10
☐ TSP
☐ MCE

All Columns Below Must Be Filled Out

ALPHA Lab ID (Lab Use Only)	Sample ID	Collection Date	Start Time	End Time	Flow Rate (L/min)	Total Volume (L)	Sample Matrix*	Sampler's Initials	Media ID# (1)	TO-13A	PCBs (High Vol)	PCBs (Low Vol)	TO-11A	Hg via NIOSH 6009 Mod.	Metals	TO-17		Sample Comments (i.e. PID)
22769.01	VAPOR INLET	9/14/15	14:07	22:29	5	2510	SV	JF	N013			✓						
.02	VAPOR OUTLET	9/14/15	14:13	22:33	5	2500	O	JF	N003			✓						
Media Type										P	P	P	D	T	F	T		

*** SAMPLE MATRIX CODES**
AA = Ambient Air (Indoor/Outdoor)
SV = Soil Vapor/Landfill Gas/SVE
Other = Please Specify

(1) Required for PUF cartridges, PM-10 and TSP filters and TO-17 sorbent tubes.

Media Code
D = DNPH Cartridge
F = Filter
P = PUF Cartridge
T = Sorbent Tube
O = Other

Relinquished By:	Date/Time	Received By:	Date/Time
[signature]	9/15/15	[signature]	9/15/15 1505
[signature]	9/15/15 17:30	[signature]	9/15/15 17:30

Please print clearly, legibly and completely. Samples can not be logged in and turnaround time clock will not start until any ambiguities are resolved. BY EXECUTING THIS COC, THE CLIENT HAS READ AND AGREES TO BE BOUND BY ALPHA'S TERMS & CONDITIONS. (See reverse side.)

Form No: 101-13 (rev 01-OCT-2013)

Sample Results

Lab ID:	L1522769-01	Sampling Time:	8.33	hrs
		Sampling Rate:	5	L/min
Matrix:	Air Media	Total Flow:	2500	L

PCB Aroclors in Air

	ng/cart				ug/m3				Dilution	
Parameter	Result	Units	RL	MDL	Result	Units	RL	MDL	Factor	Column
Aroclor 1016	0	ng/cart	30	-	ND	ug/m3	0.0120	-	1	A
Aroclor 1221	0	ng/cart	100	-	ND	ug/m3	0.0400	-	1	A
Aroclor 1232	0	ng/cart	30	-	ND	ug/m3	0.0120	-	1	A
Aroclor 1242	0	ng/cart	100	-	ND	ug/m3	0.0400	-	1	A
Aroclor 1248	4440	ng/cart	20	-	1.78	ug/m3	0.00800	-	5	B
Aroclor 1254	0	ng/cart	20	-	ND	ug/m3	0.00800	-	1	A
Aroclor 1260	0	ng/cart	20	-	ND	ug/m3	0.00800	-	1	A
Aroclor 1262	0	ng/cart	20	-	ND	ug/m3	0.00800	-	1	A
Aroclor 1268	0	ng/cart	20	-	ND	ug/m3	0.00800	-	1	A

Sample Results

Lab ID:	L1522769-02	Sampling Time:	8.37	hrs
		Sampling Rate:	5	L/min
Matrix:	Air Media	Total Flow:	2510	L

PCB Aroclors in Air

	ng/cart				ug/m3				Dilution	
Parameter	**Result**	**Units**	**RL**	**MDL**	**Result**	**Units**	**RL**	**MDL**	**Factor**	**Column**
Aroclor 1016	0	ng/cart	30	-	ND	ug/m3	0.0120	-	1	A
Aroclor 1221	0	ng/cart	100	-	ND	ug/m3	0.0398	-	1	A
Aroclor 1232	0	ng/cart	30	-	ND	ug/m3	0.0120	-	1	A
Aroclor 1242	0	ng/cart	20	-	ND	ug/m3	0.00797	-	1	A
Aroclor 1248	0	ng/cart	20	-	ND	ug/m3	0.00797	-	1	A
Aroclor 1254	0	ng/cart	20	-	ND	ug/m3	0.00797	-	1	A
Aroclor 1260	0	ng/cart	20	-	ND	ug/m3	0.00797	-	1	A
Aroclor 1262	0	ng/cart	20	-	ND	ug/m3	0.00797	-	1	A
Aroclor 1268	0	ng/cart	20	-	ND	ug/m3	0.00797	-	1	A

ANALYTICAL REPORT

Lab Number:	L1525990
Client:	TRC Environmental Consultants Wannalancit Mills 650 Suffolk Street Lowell, MA 01854
ATTN:	David Sullivan
Phone:	(978) 656-3565
Project Name:	NBHS
Project Number:	115058
Report Date:	10/21/15

The original project report/data package is held by Alpha Analytical. This report/data package is paginated and should be reproduced only in its entirety. Alpha Analytical holds no responsibility for results and/or data that are not consistent with the original.

Certifications & Approvals: NY (11627), CT (PH-0141), NH (2206), NJ NELAP (MA015), RI (LAO00299), ME (MA00030), PA (68-02089), VA (460194), LA NELAP (03090), FL (E87814), TX (T104704419), WA (C954), USFWS (Permit #LE2069641), USDA (Permit #P330-11-00109), US Army Corps of Engineers.

320 Forbes Boulevard, Mansfield, MA 02048-1806
508-822-9300 (Fax) 508-822-3288 800-624-9220 - www.alphalab.com

Project Name: NBHS
Project Number: 115058

Lab Number: L1525990
Report Date: 10/21/15

Alpha Sample ID	Client ID	Matrix	Sample Location	Collection Date/Time	Receive Date
L1525990-01	VAPOR INLET	SOIL_VAPOR	NEW BEDFORD	10/13/15 07:57	10/14/15
L1525990-02	VAPOR OUTLET	SOIL_VAPOR	NEW BEDFORD	10/13/15 08:00	10/14/15

Project Name: NBHS **Lab Number:** L1525990

Project Number: 115058 **Report Date:** 10/21/15

MADEP MCP Response Action Analytical Report Certification

This form provides certifications for all samples performed by MCP methods. Please refer to the Sample Results and Container Information sections of this report for specification of MCP methods used for each analysis. The following questions pertain only to MCP Analytical Methods.

An affirmative response to questions A through F is required for "Presumptive Certainty" status		
A	Were all samples received in a condition consistent with those described on the Chain-of-Custody, properly preserved (including temperature) in the field or laboratory, and prepared/analyzed within method holding times?	YES
B	Were the analytical method(s) and all associated QC requirements specified in the selected CAM protocol(s) followed?	YES
C	Were all required corrective actions and analytical response actions specified in the selected CAM protocol(s) implemented for all identified performance standard non-conformances?	YES
D	Does the laboratory report comply with all the reporting requirements specified in CAM VII A, "Quality Assurance and Quality Control Guidelines for the Acquisition and Reporting of Analytical Data?"	YES
E a.	VPH, EPH, and APH Methods only: Was each method conducted without significant modification(s)? (Refer to the individual method(s) for a list of significant modifications).	N/A
E b.	APH and TO-15 Methods only: Was the complete analyte list reported for each method?	YES
F	Were all applicable CAM protocol QC and performance standard non-conformances identified and evaluated in a laboratory narrative (including all "No" responses to Questions A through E)?	YES

A response to questions G, H and I is required for "Presumptive Certainty" status		
G	Were the reporting limits at or below all CAM reporting limits specified in the selected CAM protocol(s)?	NO
H	Were all QC performance standards specified in the CAM protocol(s) achieved?	YES
I	Were results reported for the complete analyte list specified in the selected CAM protocol(s)?	YES

For any questions answered "No", please refer to the case narrative section on the following page(s).

Please note that sample matrix information is located in the Sample Results section of this report.

Project Name: NBHS
Project Number: 115058

Lab Number: L1525990
Report Date: 10/21/15

Case Narrative

The samples were received in accordance with the Chain of Custody and no significant deviations were encountered during the preparation or analysis unless otherwise noted. Sample Receipt, Container Information, and the Chain of Custody are located at the back of the report.

Results contained within this report relate only to the samples submitted under this Alpha Lab Number and meet all of the requirements of NELAC, for all NELAC accredited parameters. The data presented in this report is organized by parameter (i.e. VOC, SVOC, etc.). Sample specific Quality Control data (i.e. Surrogate Spike Recovery) is reported at the end of the target analyte list for each individual sample, followed by the Laboratory Batch Quality Control at the end of each parameter. Tentatively Identified Compounds (TICs), if requested, are reported for compounds identified to be present and are not part of the method/program Target Compound List, even if only a subset of the TCL are being reported. If a sample was re-analyzed or re-extracted due to a required quality control corrective action and if both sets of data are reported, the Laboratory ID of the re-analysis or re-extraction is designated with an "R" or "RE", respectively. When multiple Batch Quality Control elements are reported (e.g. more than one LCS), the associated samples for each element are noted in the grey shaded header line of each data table. Any Laboratory Batch, Sample Specific % recovery or RPD value that is outside the listed Acceptance Criteria is bolded in the report. All specific QC information is also incorporated in the Data Usability format of our Data Merger tool where it can be reviewed along with any associated usability implications. Soil/sediments, solids and tissues are reported on a dry weight basis unless otherwise noted. Definitions of all data qualifiers and acronyms used in this report are provided in the Glossary located at the back of the report.

In reference to questions H (CAM) or 4 (RCP) when "NO" is checked, the performance criteria for CAM and RCP methods allow for some quality control failures to occur and still be within method compliance. In these instances the specific failure is not narrated but noted in the associated QC table. The information is also incorporated in the Data Usability format of our Data Merger tool where it can be reviewed along with any associated usability implications.

Please see the associated ADEx data file for a comparison of laboratory reporting limits that were achieved with the regulatory Numerical Standards requested on the Chain of Custody.

HOLD POLICY
For samples submitted on hold, Alpha's policy is to hold samples (with the exception of Air canisters) free of charge for 21 calendar days from the date the project is completed. After 21 calendar days, we will dispose of all samples submitted including those put on hold unless you have contacted your Client Service Representative and made arrangements for Alpha to continue to hold the samples. Air canisters will be disposed after 3 business days from the date the project is completed.

Please contact Client Services at 800-624-9220 with any questions.

Project Name: NBHS **Lab Number:** L1525990
Project Number: 115058 **Report Date:** 10/21/15

Case Narrative (continued)

MCP Related Narratives

Canisters were released from the laboratory on October 9, 2015. The canister certification data is provided as an addendum.

MCP Volatile Organics in Air

In reference to question G:

One or more of the target analytes did not achieve the requested CAM reporting limits.

Sample L1525990-01 and WG830070-5 Duplicate results for Acetone should be considered estimated due to co-elution with a non-target peak.

Sample L1525990-02 and WG830722-5 Duplicate results for Acetone should be considered estimated due to co-elution with a non-target peak.

I, the undersigned, attest under the pains and penalties of perjury that, to the best of my knowledge and belief and based upon my personal inquiry of those responsible for providing the information contained in this analytical report, such information is accurate and complete. This certificate of analysis is not complete unless this page accompanies any and all pages of this report.

Authorized Signature: Christopher J. Anderson

Title: Technical Director/Representative Date: 10/21/15

AIR

Project Name: NBHS
Project Number: 115058

Lab Number: L1525990
Report Date: 10/21/15

SAMPLE RESULTS

Lab ID: L1525990-01
Client ID: VAPOR INLET
Sample Location: NEW BEDFORD
Matrix: Soil_Vapor
Anaytical Method: 101,TO-15
Analytical Date: 10/15/15 02:24
Analyst: RY

Date Collected: 10/13/15 07:57
Date Received: 10/14/15
Field Prep: Not Specified

Parameter	ppbV Results	ppbV RL	ppbV MDL	ug/m3 Results	ug/m3 RL	ug/m3 MDL	Qualifier	Dilution Factor
MCP Volatile Organics in Air - Mansfield Lab								
Vinyl chloride	2.52	0.200	--	6.44	0.511	--		1
Bromomethane	ND	0.200	--	ND	0.777	--		1
Acetone	3.69	1.00	--	8.77	2.38	--		1
1,1-Dichloroethene	ND	0.200	--	ND	0.793	--		1
Methylene chloride	ND	0.500	--	ND	1.74	--		1
trans-1,2-Dichloroethene	0.716	0.200	--	2.84	0.793	--		1
1,1-Dichloroethane	ND	0.200	--	ND	0.809	--		1
Methyl tert butyl ether	ND	0.200	--	ND	0.721	--		1
2-Butanone	0.531	0.500	--	1.57	1.47	--		1
cis-1,2-Dichloroethene	1.05	0.200	--	4.16	0.793	--		1
Chloroform	0.281	0.200	--	1.37	0.977	--		1
1,2-Dichloroethane	ND	0.200	--	ND	0.809	--		1
1,1,1-Trichloroethane	ND	0.200	--	ND	1.09	--		1
Benzene	ND	0.200	--	ND	0.639	--		1
Carbon tetrachloride	ND	0.200	--	ND	1.26	--		1
1,2-Dichloropropane	ND	0.200	--	ND	0.924	--		1
Bromodichloromethane	ND	0.200	--	ND	1.34	--		1
1,4-Dioxane	ND	0.200	--	ND	0.721	--		1
Trichloroethene	0.531	0.200	--	2.85	1.07	--		1
cis-1,3-Dichloropropene	ND	0.200	--	ND	0.908	--		1
4-Methyl-2-pentanone	ND	0.500	--	ND	2.05	--		1
trans-1,3-Dichloropropene	ND	0.200	--	ND	0.908	--		1
1,1,2-Trichloroethane	ND	0.200	--	ND	1.09	--		1
Toluene	1.20	0.200	--	4.52	0.754	--		1

Project Name: NBHS
Project Number: 115058

Lab Number: L1525990
Report Date: 10/21/15

SAMPLE RESULTS

Lab ID: L1525990-01
Client ID: VAPOR INLET
Sample Location: NEW BEDFORD

Date Collected: 10/13/15 07:57
Date Received: 10/14/15
Field Prep: Not Specified

Parameter	ppbV Results	ppbV RL	ppbV MDL	ug/m3 Results	ug/m3 RL	ug/m3 MDL	Qualifier	Dilution Factor
MCP Volatile Organics in Air - Mansfield Lab								
Dibromochloromethane	ND	0.200	--	ND	1.70	--		1
1,2-Dibromoethane	ND	0.200	--	ND	1.54	--		1
Tetrachloroethene	ND	0.200	--	ND	1.36	--		1
Chlorobenzene	ND	0.200	--	ND	0.921	--		1
Ethylbenzene	ND	0.200	--	ND	0.869	--		1
p/m-Xylene	ND	0.400	--	ND	1.74	--		1
Bromoform	ND	0.200	--	ND	2.07	--		1
Styrene	ND	0.200	--	ND	0.852	--		1
1,1,2,2-Tetrachloroethane	ND	0.200	--	ND	1.37	--		1
o-Xylene	ND	0.200	--	ND	0.869	--		1
1,3-Dichlorobenzene	ND	0.200	--	ND	1.20	--		1
1,4-Dichlorobenzene	ND	0.200	--	ND	1.20	--		1
1,2-Dichlorobenzene	ND	0.200	--	ND	1.20	--		1
1,2,4-Trichlorobenzene	ND	0.200	--	ND	1.48	--		1
Naphthalene	ND	0.200	--	ND	1.05	--		1
Hexachlorobutadiene	ND	0.200	--	ND	2.13	--		1

Internal Standard	% Recovery	Qualifier	Acceptance Criteria
1,4-Difluorobenzene	82		60-140
Bromochloromethane	87		60-140
chlorobenzene-d5	86		60-140

Project Name: NBHS
Project Number: 115058

Lab Number: L1525990
Report Date: 10/21/15

SAMPLE RESULTS

Lab ID: L1525990-02
Client ID: VAPOR OUTLET
Sample Location: NEW BEDFORD
Matrix: Soil_Vapor
Anaytical Method: 101,TO15-SIM
Analytical Date: 10/15/15 01:15
Analyst: RY

Date Collected: 10/13/15 08:00
Date Received: 10/14/15
Field Prep: Not Specified

Parameter	ppbV Results	ppbV RL	ppbV MDL	ug/m3 Results	ug/m3 RL	ug/m3 MDL	Qualifier	Dilution Factor
MCP Volatile Organics in Air by SIM - Mansfield Lab								
Vinyl chloride	2.29	0.020	--	5.85	0.051	--		1
Bromomethane	ND	0.020	--	ND	0.078	--		1
Acetone	2.24	1.00	--	5.32	2.38	--		1
1,1-Dichloroethene	ND	0.020	--	ND	0.079	--		1
Methylene chloride	ND	0.500	--	ND	1.74	--		1
trans-1,2-Dichloroethene	0.899	0.020	--	3.56	0.079	--		1
1,1-Dichloroethane	ND	0.020	--	ND	0.081	--		1
Methyl tert butyl ether	ND	0.200	--	ND	0.721	--		1
2-Butanone	ND	0.500	--	ND	1.47	--		1
cis-1,2-Dichloroethene	2.35	0.020	--	9.32	0.079	--		1
Chloroform	0.204	0.020	--	0.996	0.098	--		1
1,2-Dichloroethane	ND	0.020	--	ND	0.081	--		1
1,1,1-Trichloroethane	ND	0.020	--	ND	0.109	--		1
Benzene	1.04	0.100	--	3.32	0.319	--		1
Carbon tetrachloride	ND	0.020	--	ND	0.126	--		1
1,2-Dichloropropane	ND	0.020	--	ND	0.092	--		1
Bromodichloromethane	ND	0.020	--	ND	0.134	--		1
1,4-Dioxane	ND	0.100	--	ND	0.360	--		1
Trichloroethene	ND	0.020	--	ND	0.107	--		1
cis-1,3-Dichloropropene	ND	0.020	--	ND	0.091	--		1
4-Methyl-2-pentanone	ND	0.500	--	ND	2.05	--		1
trans-1,3-Dichloropropene	ND	0.020	--	ND	0.091	--		1
1,1,2-Trichloroethane	ND	0.020	--	ND	0.109	--		1
Toluene	0.856	0.050	--	3.23	0.188	--		1

Project Name: NBHS
Project Number: 115058
Lab Number: L1525990
Report Date: 10/21/15

SAMPLE RESULTS

Lab ID: L1525990-02
Client ID: VAPOR OUTLET
Sample Location: NEW BEDFORD
Date Collected: 10/13/15 08:00
Date Received: 10/14/15
Field Prep: Not Specified

Parameter	ppbV Results	ppbV RL	ppbV MDL	ug/m3 Results	ug/m3 RL	ug/m3 MDL	Qualifier	Dilution Factor
MCP Volatile Organics in Air by SIM - Mansfield Lab								
Dibromochloromethane	ND	0.020	--	ND	0.170	--		1
1,2-Dibromoethane	ND	0.020	--	ND	0.154	--		1
Tetrachloroethene	ND	0.020	--	ND	0.136	--		1
Chlorobenzene	ND	0.020	--	ND	0.092	--		1
Ethylbenzene	0.108	0.020	--	0.469	0.087	--		1
p/m-Xylene	0.362	0.040	--	1.57	0.174	--		1
Bromoform	ND	0.020	--	ND	0.207	--		1
Styrene	0.026	0.020	--	0.111	0.085	--		1
1,1,2,2-Tetrachloroethane	ND	0.020	--	ND	0.137	--		1
o-Xylene	0.118	0.020	--	0.513	0.087	--		1
1,3-Dichlorobenzene	ND	0.020	--	ND	0.120	--		1
1,4-Dichlorobenzene	ND	0.020	--	ND	0.120	--		1
1,2-Dichlorobenzene	ND	0.020	--	ND	0.120	--		1
1,2,4-Trichlorobenzene	ND	0.050	--	ND	0.371	--		1
Naphthalene	ND	0.050	--	ND	0.262	--		1
Hexachlorobutadiene	ND	0.050	--	ND	0.533	--		1

Internal Standard	% Recovery	Qualifier	Acceptance Criteria
1,4-difluorobenzene	90		60-140
bromochloromethane	94		60-140
chlorobenzene-d5	91		60-140

Project Name: NBHS
Project Number: 115058

Lab Number: L1525990
Report Date: 10/21/15

Method Blank Analysis
Batch Quality Control

Analytical Method: 101,TO-15
Analytical Date: 10/14/15 14:36

Parameter	ppbV Results	ppbV RL	ppbV MDL	ug/m3 Results	ug/m3 RL	ug/m3 MDL	Qualifier	Dilution Factor
MCP Volatile Organics in Air - Mansfield Lab for sample(s): 01 Batch: WG830070-4								
Chlorodifluoromethane	ND	0.200	--	ND	0.707	--		1
Propylene	ND	0.500	--	ND	0.861	--		1
Propane	ND	0.500	--	ND	0.902	--		1
Dichlorodifluoromethane	ND	0.200	--	ND	0.989	--		1
Chloromethane	ND	0.200	--	ND	0.413	--		1
1,2-Dichloro-1,1,2,2-tetrafluoroethane	ND	0.200	--	ND	1.40	--		1
Methanol	ND	5.00	--	ND	6.55	--		1
Vinyl chloride	ND	0.200	--	ND	0.511	--		1
1,3-Butadiene	ND	0.200	--	ND	0.442	--		1
Butane	ND	0.200	--	ND	0.475	--		1
Bromomethane	ND	0.200	--	ND	0.777	--		1
Chloroethane	ND	0.200	--	ND	0.528	--		1
Ethyl Alcohol	ND	2.50	--	ND	4.71	--		1
Dichlorofluoromethane	ND	0.200	--	ND	0.842	--		1
Vinyl bromide	ND	0.200	--	ND	0.874	--		1
Acrolein	ND	0.500	--	ND	1.15	--		1
Acetone	ND	1.00	--	ND	2.38	--		1
Acetonitrile	ND	0.200	--	ND	0.336	--		1
Trichlorofluoromethane	ND	0.200	--	ND	1.12	--		1
iso-Propyl Alcohol	ND	0.500	--	ND	1.23	--		1
Acrylonitrile	ND	0.500	--	ND	1.09	--		1
Pentane	ND	0.200	--	ND	0.590	--		1
Ethyl ether	ND	0.200	--	ND	0.606	--		1
1,1-Dichloroethene	ND	0.200	--	ND	0.793	--		1
tert-Butyl Alcohol	ND	0.500	--	ND	1.52	--		1

Project Name: NBHS
Project Number: 115058

Lab Number: L1525990
Report Date: 10/21/15

Method Blank Analysis
Batch Quality Control

Analytical Method: 101,TO-15
Analytical Date: 10/14/15 14:36

Parameter	ppbV Results	ppbV RL	ppbV MDL	ug/m3 Results	ug/m3 RL	ug/m3 MDL	Qualifier	Dilution Factor
MCP Volatile Organics in Air - Mansfield Lab for sample(s): 01 Batch: WG830070-4								
Methylene chloride	ND	0.500	--	ND	1.74	--		1
3-Chloropropene	ND	0.200	--	ND	0.626	--		1
Carbon disulfide	ND	0.200	--	ND	0.623	--		1
1,1,2-Trichloro-1,2,2-Trifluoroethane	ND	0.200	--	ND	1.53	--		1
trans-1,2-Dichloroethene	ND	0.200	--	ND	0.793	--		1
1,1-Dichloroethane	ND	0.200	--	ND	0.809	--		1
Methyl tert butyl ether	ND	0.200	--	ND	0.721	--		1
Vinyl acetate	ND	1.00	--	ND	3.52	--		1
2-Butanone	ND	0.500	--	ND	1.47	--		1
cis-1,2-Dichloroethene	ND	0.200	--	ND	0.793	--		1
Ethyl Acetate	ND	0.500	--	ND	1.80	--		1
Chloroform	ND	0.200	--	ND	0.977	--		1
Tetrahydrofuran	ND	0.500	--	ND	1.47	--		1
2,2-Dichloropropane	ND	0.200	--	ND	0.924	--		1
1,2-Dichloroethane	ND	0.200	--	ND	0.809	--		1
n-Hexane	ND	0.200	--	ND	0.705	--		1
Isopropyl Ether	ND	0.200	--	ND	0.836	--		1
Ethyl-Tert-Butyl-Ether	ND	0.200	--	ND	0.836	--		1
1,1,1-Trichloroethane	ND	0.200	--	ND	1.09	--		1
1,1-Dichloropropene	ND	0.200	--	ND	0.908	--		1
Benzene	ND	0.200	--	ND	0.639	--		1
Carbon tetrachloride	ND	0.200	--	ND	1.26	--		1
Cyclohexane	ND	0.200	--	ND	0.688	--		1
Tertiary-Amyl Methyl Ether	ND	0.200	--	ND	0.836	--		1
Dibromomethane	ND	0.200	--	ND	1.42	--		1

Project Name: NBHS
Project Number: 115058

Lab Number: L1525990
Report Date: 10/21/15

Method Blank Analysis
Batch Quality Control

Analytical Method: 101,TO-15
Analytical Date: 10/14/15 14:36

Parameter	ppbV Results	ppbV RL	ppbV MDL	ug/m3 Results	ug/m3 RL	ug/m3 MDL	Qualifier	Dilution Factor
MCP Volatile Organics in Air - Mansfield Lab for sample(s): 01 Batch: WG830070-4								
1,2-Dichloropropane	ND	0.200	--	ND	0.924	--		1
Bromodichloromethane	ND	0.200	--	ND	1.34	--		1
1,4-Dioxane	ND	0.200	--	ND	0.721	--		1
Trichloroethene	ND	0.200	--	ND	1.07	--		1
2,2,4-Trimethylpentane	ND	0.200	--	ND	0.934	--		1
Methyl Methacrylate	ND	0.500	--	ND	2.05	--		1
Heptane	ND	0.200	--	ND	0.820	--		1
cis-1,3-Dichloropropene	ND	0.200	--	ND	0.908	--		1
4-Methyl-2-pentanone	ND	0.500	--	ND	2.05	--		1
trans-1,3-Dichloropropene	ND	0.200	--	ND	0.908	--		1
1,1,2-Trichloroethane	ND	0.200	--	ND	1.09	--		1
Toluene	ND	0.200	--	ND	0.754	--		1
1,3-Dichloropropane	ND	0.200	--	ND	0.924	--		1
2-Hexanone	ND	0.200	--	ND	0.820	--		1
Dibromochloromethane	ND	0.200	--	ND	1.70	--		1
1,2-Dibromoethane	ND	0.200	--	ND	1.54	--		1
Butyl Acetate	ND	0.500	--	ND	2.38	--		1
Octane	ND	0.200	--	ND	0.934	--		1
Tetrachloroethene	ND	0.200	--	ND	1.36	--		1
1,1,1,2-Tetrachloroethane	ND	0.200	--	ND	1.37	--		1
Chlorobenzene	ND	0.200	--	ND	0.921	--		1
Ethylbenzene	ND	0.200	--	ND	0.869	--		1
p/m-Xylene	ND	0.400	--	ND	1.74	--		1
Bromoform	ND	0.200	--	ND	2.07	--		1
Styrene	ND	0.200	--	ND	0.852	--		1

Project Name: NBHS
Project Number: 115058

Lab Number: L1525990
Report Date: 10/21/15

Method Blank Analysis
Batch Quality Control

Analytical Method: 101,TO-15
Analytical Date: 10/14/15 14:36

Parameter	ppbV Results	ppbV RL	ppbV MDL	ug/m3 Results	ug/m3 RL	ug/m3 MDL	Qualifier	Dilution Factor
MCP Volatile Organics in Air - Mansfield Lab for sample(s): 01 Batch: WG830070-4								
1,1,2,2-Tetrachloroethane	ND	0.200	--	ND	1.37	--		1
o-Xylene	ND	0.200	--	ND	0.869	--		1
1,2,3-Trichloropropane	ND	0.200	--	ND	1.21	--		1
Nonane (C9)	ND	0.200	--	ND	1.05	--		1
Isopropylbenzene	ND	0.200	--	ND	0.983	--		1
Bromobenzene	ND	0.200	--	ND	0.793	--		1
o-Chlorotoluene	ND	0.200	--	ND	1.04	--		1
n-Propylbenzene	ND	0.200	--	ND	0.983	--		1
p-Chlorotoluene	ND	0.200	--	ND	1.04	--		1
4-Ethyltoluene	ND	0.200	--	ND	0.983	--		1
1,3,5-Trimethylbenzene	ND	0.200	--	ND	0.983	--		1
tert-Butylbenzene	ND	0.200	--	ND	1.10	--		1
1,2,4-Trimethylbenzene	ND	0.200	--	ND	0.983	--		1
Decane (C10)	ND	0.200	--	ND	1.16	--		1
Benzyl chloride	ND	0.200	--	ND	1.04	--		1
1,3-Dichlorobenzene	ND	0.200	--	ND	1.20	--		1
1,4-Dichlorobenzene	ND	0.200	--	ND	1.20	--		1
sec-Butylbenzene	ND	0.200	--	ND	1.10	--		1
p-Isopropyltoluene	ND	0.200	--	ND	1.10	--		1
1,2-Dichlorobenzene	ND	0.200	--	ND	1.20	--		1
n-Butylbenzene	ND	0.200	--	ND	1.10	--		1
1,2-Dibromo-3-chloropropane	ND	0.200	--	ND	1.93	--		1
Undecane	ND	0.200	--	ND	1.28	--		1
Dodecane (C12)	ND	0.200	--	ND	1.39	--		1
1,2,4-Trichlorobenzene	ND	0.200	--	ND	1.48	--		1

Project Name: NBHS
Project Number: 115058

Lab Number: L1525990
Report Date: 10/21/15

Method Blank Analysis
Batch Quality Control

Analytical Method: 101,TO-15
Analytical Date: 10/14/15 14:36

Parameter	ppbV Results	ppbV RL	ppbV MDL	ug/m3 Results	ug/m3 RL	ug/m3 MDL	Qualifier	Dilution Factor
MCP Volatile Organics in Air - Mansfield Lab for sample(s): 01 Batch: WG830070-4								
Naphthalene	ND	0.200	--	ND	1.05	--		1
1,2,3-Trichlorobenzene	ND	0.200	--	ND	1.48	--		1
Hexachlorobutadiene	ND	0.200	--	ND	2.13	--		1

Project Name: NBHS
Project Number: 115058

Lab Number: L1525990
Report Date: 10/21/15

Method Blank Analysis
Batch Quality Control

Analytical Method: 101,TO15-SIM
Analytical Date: 10/14/15 14:36

Parameter	ppbV Results	ppbV RL	ppbV MDL	ug/m3 Results	ug/m3 RL	ug/m3 MDL	Qualifier	Dilution Factor
MCP Volatile Organics in Air by SIM - Mansfield Lab for sample(s): 02 Batch: WG830722-4								
Dichlorodifluoromethane	ND	0.200	--	ND	0.989	--		1
Chloromethane	ND	0.200	--	ND	0.413	--		1
Freon-114	ND	0.050	--	ND	0.349	--		1
Vinyl chloride	ND	0.020	--	ND	0.051	--		1
1,3-Butadiene	ND	0.020	--	ND	0.044	--		1
Bromomethane	ND	0.020	--	ND	0.078	--		1
Chloroethane	ND	0.020	--	ND	0.053	--		1
Acetone	ND	1.00	--	ND	2.38	--		1
Trichlorofluoromethane	ND	0.050	--	ND	0.281	--		1
Acrylonitrile	ND	0.500	--	ND	1.09	--		1
1,1-Dichloroethene	ND	0.020	--	ND	0.079	--		1
Methylene chloride	ND	0.500	--	ND	1.74	--		1
Freon-113	ND	0.050	--	ND	0.383	--		1
Halothane	ND	0.050	--	ND	0.404	--		1
trans-1,2-Dichloroethene	ND	0.020	--	ND	0.079	--		1
1,1-Dichloroethane	ND	0.020	--	ND	0.081	--		1
Methyl tert butyl ether	ND	0.200	--	ND	0.721	--		1
2-Butanone	ND	0.500	--	ND	1.47	--		1
cis-1,2-Dichloroethene	ND	0.020	--	ND	0.079	--		1
Chloroform	ND	0.020	--	ND	0.098	--		1
1,2-Dichloroethane	ND	0.020	--	ND	0.081	--		1
1,1,1-Trichloroethane	ND	0.020	--	ND	0.109	--		1
Benzene	ND	0.100	--	ND	0.319	--		1
Carbon tetrachloride	ND	0.020	--	ND	0.126	--		1
1,2-Dichloropropane	ND	0.020	--	ND	0.092	--		1

Project Name: NBHS
Project Number: 115058

Lab Number: L1525990
Report Date: 10/21/15

Method Blank Analysis
Batch Quality Control

Analytical Method: 101,TO15-SIM
Analytical Date: 10/14/15 14:36

Parameter	ppbV Results	ppbV RL	ppbV MDL	ug/m3 Results	ug/m3 RL	ug/m3 MDL	Qualifier	Dilution Factor
MCP Volatile Organics in Air by SIM - Mansfield Lab for sample(s): 02 Batch: WG830722-4								
Bromodichloromethane	ND	0.020	--	ND	0.134	--		1
1,4-Dioxane	ND	0.100	--	ND	0.360	--		1
Trichloroethene	ND	0.020	--	ND	0.107	--		1
cis-1,3-Dichloropropene	ND	0.020	--	ND	0.091	--		1
4-Methyl-2-pentanone	ND	0.500	--	ND	2.05	--		1
trans-1,3-Dichloropropene	ND	0.020	--	ND	0.091	--		1
1,1,2-Trichloroethane	ND	0.020	--	ND	0.109	--		1
Toluene	ND	0.050	--	ND	0.188	--		1
Dibromochloromethane	ND	0.020	--	ND	0.170	--		1
1,2-Dibromoethane	ND	0.020	--	ND	0.154	--		1
Tetrachloroethene	ND	0.020	--	ND	0.136	--		1
1,1,1,2-Tetrachloroethane	ND	0.020	--	ND	0.137	--		1
Chlorobenzene	ND	0.020	--	ND	0.092	--		1
Ethylbenzene	ND	0.020	--	ND	0.087	--		1
p/m-Xylene	ND	0.040	--	ND	0.174	--		1
Bromoform	ND	0.020	--	ND	0.207	--		1
Styrene	ND	0.020	--	ND	0.085	--		1
1,1,2,2-Tetrachloroethane	ND	0.020	--	ND	0.137	--		1
o-Xylene	ND	0.020	--	ND	0.087	--		1
Isopropylbenzene	ND	0.200	--	ND	0.983	--		1
1,3,5-Trimethybenzene	ND	0.020	--	ND	0.098	--		1
1,2,4-Trimethylbenzene	ND	0.020	--	ND	0.098	--		1
1,3-Dichlorobenzene	ND	0.020	--	ND	0.120	--		1
1,4-Dichlorobenzene	ND	0.020	--	ND	0.120	--		1
sec-Butylbenzene	ND	0.200	--	ND	1.10	--		1

Project Name: NBHS
Project Number: 115058

Lab Number: L1525990
Report Date: 10/21/15

Method Blank Analysis
Batch Quality Control

Analytical Method: 101,TO15-SIM
Analytical Date: 10/14/15 14:36

Parameter	ppbV Results	ppbV RL	ppbV MDL	ug/m3 Results	ug/m3 RL	ug/m3 MDL	Qualifier	Dilution Factor
MCP Volatile Organics in Air by SIM - Mansfield Lab for sample(s): 02 Batch: WG830722-4								
p-Isopropyltoluene	ND	0.200	--	ND	1.10	--		1
1,2-Dichlorobenzene	ND	0.020	--	ND	0.120	--		1
n-Butylbenzene	ND	0.200	--	ND	1.10	--		1
1,2,4-Trichlorobenzene	ND	0.050	--	ND	0.371	--		1
Naphthalene	ND	0.050	--	ND	0.262	--		1
1,2,3-Trichlorobenzene	ND	0.050	--	ND	0.371	--		1
Hexachlorobutadiene	ND	0.050	--	ND	0.533	--		1

Lab Control Sample Analysis
Batch Quality Control

Project Name: NBHS
Project Number: 115058

Lab Number: L1525990
Report Date: 10/21/15

Parameter	LCS %Recovery	Qual	LCSD %Recovery	Qual	%Recovery Limits	RPD	Qual	RPD Limits
MCP Volatile Organics in Air - Mansfield Lab Associated sample(s): 01 Batch: WG830070-3								
Chlorodifluoromethane	84		-		70-130	-		
Propylene	100		-		70-130	-		
Dichlorodifluoromethane	129		-		70-130	-		
Chloromethane	93		-		70-130	-		
1,2-Dichloro-1,1,2,2-tetrafluoroethane	102		-		70-130	-		
Methanol	74		-		70-130	-		
Vinyl chloride	97		-		70-130	-		
1,3-Butadiene	101		-		70-130	-		
Bromomethane	99		-		70-130	-		
Chloroethane	100		-		70-130	-		
Ethyl Alcohol	74		-		70-130	-		
Dichlorofluoromethane	87		-		70-130	-		
Vinyl bromide	101		-		70-130	-		
Acrolein	88		-		70-130	-		
Acetone	93		-		50-150	-		
Acetonitrile	88		-		70-130	-		
Trichlorofluoromethane	98		-		70-130	-		
iso-Propyl Alcohol	93		-		70-130	-		
Acrylonitrile	90		-		70-130	-		
Pentane	85		-		70-130	-		
Ethyl ether	84		-		70-130	-		

Lab Control Sample Analysis
Batch Quality Control

Project Name: NBHS
Project Number: 115058

Lab Number: L1525990
Report Date: 10/21/15

Parameter	LCS %Recovery	Qual	LCSD %Recovery	Qual	%Recovery Limits	RPD	Qual	RPD Limits
MCP Volatile Organics in Air - Mansfield Lab Associated sample(s): 01 Batch: WG830070-3								
1,1-Dichloroethene	100		-		70-130	-		
tert-Butyl Alcohol	88		-		70-130	-		
Methylene chloride	96		-		70-130	-		
3-Chloropropene	92		-		70-130	-		
Carbon disulfide	99		-		70-130	-		
1,1,2-Trichloro-1,2,2-Trifluoroethane	105		-		70-130	-		
trans-1,2-Dichloroethene	92		-		70-130	-		
1,1-Dichloroethane	99		-		70-130	-		
Methyl tert butyl ether	99		-		70-130	-		
Vinyl acetate	105		-		70-130	-		
2-Butanone	93		-		70-130	-		
cis-1,2-Dichloroethene	109		-		70-130	-		
Ethyl Acetate	105		-		70-130	-		
Chloroform	102		-		70-130	-		
Tetrahydrofuran	90		-		70-130	-		
2,2-Dichloropropane	91		-		70-130	-		
1,2-Dichloroethane	95		-		70-130	-		
n-Hexane	94		-		70-130	-		
Isopropyl Ether	86		-		70-130	-		
Ethyl-Tert-Butyl-Ether	84		-		70-130	-		
1,1,1-Trichloroethane	96		-		70-130	-		

Lab Control Sample Analysis
Batch Quality Control

Project Name: NBHS
Project Number: 115058

Lab Number: L1525990
Report Date: 10/21/15

Parameter	LCS %Recovery	Qual	LCSD %Recovery	Qual	%Recovery Limits	RPD	Qual	RPD Limits
MCP Volatile Organics in Air - Mansfield Lab Associated sample(s): 01 Batch: WG830070-3								
1,1-Dichloropropene	94		-		70-130	-		
Benzene	96		-		70-130	-		
Carbon tetrachloride	97		-		70-130	-		
Cyclohexane	92		-		70-130	-		
Tertiary-Amyl Methyl Ether	86		-		70-130	-		
Dibromomethane	89		-		70-130	-		
1,2-Dichloropropane	95		-		70-130	-		
Bromodichloromethane	93		-		70-130	-		
1,4-Dioxane	102		-		50-150	-		
Trichloroethene	105		-		70-130	-		
2,2,4-Trimethylpentane	96		-		70-130	-		
Methyl Methacrylate[1]	86		-		70-130	-		
Heptane	91		-		70-130	-		
cis-1,3-Dichloropropene	102		-		70-130	-		
4-Methyl-2-pentanone	89		-		70-130	-		
trans-1,3-Dichloropropene	84		-		70-130	-		
1,1,2-Trichloroethane	102		-		70-130	-		
Toluene	107		-		70-130	-		
1,3-Dichloropropane	97		-		70-130	-		
2-Hexanone	103		-		70-130	-		
Dibromochloromethane	107		-		70-130	-		

Lab Control Sample Analysis
Batch Quality Control

Project Name: NBHS
Project Number: 115058

Lab Number: L1525990
Report Date: 10/21/15

Parameter	LCS %Recovery	Qual	LCSD %Recovery	Qual	%Recovery Limits	RPD	Qual	RPD Limits
MCP Volatile Organics in Air - Mansfield Lab Associated sample(s): 01 Batch: WG830070-3								
1,2-Dibromoethane	107		-		70-130	-		
Octane	103		-		70-130	-		
Tetrachloroethene	110		-		70-130	-		
1,1,1,2-Tetrachloroethane	102		-		70-130	-		
Chlorobenzene	111		-		70-130	-		
Ethylbenzene	109		-		70-130	-		
p/m-Xylene	110		-		70-130	-		
Bromoform	113		-		70-130	-		
Styrene	112		-		70-130	-		
1,1,2,2-Tetrachloroethane	114		-		70-130	-		
o-Xylene	113		-		70-130	-		
1,2,3-Trichloropropane	102		-		70-130	-		
Nonane (C9)	96		-		70-130	-		
Isopropylbenzene	106		-		70-130	-		
Bromobenzene	102		-		70-130	-		
o-Chlorotoluene	105		-		70-130	-		
n-Propylbenzene	107		-		70-130	-		
p-Chlorotoluene	103		-		70-130	-		
4-Ethyltoluene	106		-		70-130	-		
1,3,5-Trimethylbenzene	111		-		70-130	-		
tert-Butylbenzene	108		-		70-130	-		

Lab Control Sample Analysis
Batch Quality Control

Project Name: NBHS
Project Number: 115058

Lab Number: L1525990
Report Date: 10/21/15

Parameter	LCS %Recovery	Qual	LCSD %Recovery	Qual	%Recovery Limits	RPD	Qual	RPD Limits
MCP Volatile Organics in Air - Mansfield Lab Associated sample(s): 01 Batch: WG830070-3								
1,2,4-Trimethylbenzene	117		-		70-130	-		
Decane (C10)	105		-		70-130	-		
Benzyl chloride	117		-		70-130	-		
1,3-Dichlorobenzene	117		-		70-130	-		
1,4-Dichlorobenzene	115		-		70-130	-		
sec-Butylbenzene	106		-		70-130	-		
p-Isopropyltoluene	101		-		70-130	-		
1,2-Dichlorobenzene	116		-		70-130	-		
n-Butylbenzene	110		-		70-130	-		
1,2-Dibromo-3-chloropropane	102		-		70-130	-		
Undecane	110		-		70-130	-		
Dodecane (C12)	112		-		70-130	-		
1,2,4-Trichlorobenzene	127		-		50-150	-		
Naphthalene	116		-		50-150	-		
1,2,3-Trichlorobenzene	114		-		70-130	-		
Hexachlorobutadiene	120		-		50-150	-		

Lab Control Sample Analysis
Batch Quality Control

Project Name: NBHS
Project Number: 115058

Lab Number: L1525990
Report Date: 10/21/15

Parameter	LCS %Recovery	Qual	LCSD %Recovery	Qual	%Recovery Limits	RPD	Qual	RPD Limits
MCP Volatile Organics in Air by SIM - Mansfield Lab Associated sample(s): 02 Batch: WG830722-3								
Dichlorodifluoromethane	125		-		70-130	-		
Chloromethane	94		-		70-130	-		
1,2-Dichloro-1,1,2,2-tetrafluoroethane	104		-		70-130	-		
Vinyl chloride	101		-		70-130	-		
1,3-Butadiene	106		-		70-130	-		
Bromomethane	102		-		70-130	-		
Chloroethane	99		-		70-130	-		
Acetone	95		-		50-150	-		
Trichlorofluoromethane	102		-		70-130	-		
1,1-Dichloroethene	101		-		70-130	-		
Methylene chloride	97		-		70-130	-		
1,1,2-Trichloro-1,2,2-Trifluoroethane	105		-		70-130	-		
Halothane	96		-		70-130	-		
trans-1,2-Dichloroethene	93		-		70-130	-		
1,1-Dichloroethane	102		-		70-130	-		
Methyl tert butyl ether	103		-		70-130	-		
2-Butanone	100		-		70-130	-		
cis-1,2-Dichloroethene	112		-		70-130	-		
Chloroform	105		-		70-130	-		
1,2-Dichloroethane	98		-		70-130	-		
1,1,1-Trichloroethane	97		-		70-130	-		

Lab Control Sample Analysis
Batch Quality Control

Project Name: NBHS
Project Number: 115058

Lab Number: L1525990
Report Date: 10/21/15

Parameter	LCS %Recovery	Qual	LCSD %Recovery	Qual	%Recovery Limits	RPD	Qual	RPD Limits
MCP Volatile Organics in Air by SIM - Mansfield Lab Associated sample(s): 02 Batch: WG830722-3								
Benzene	97		-		70-130	-		
Carbon tetrachloride	99		-		70-130	-		
1,2-Dichloropropane	97		-		70-130	-		
Bromodichloromethane	99		-		70-130	-		
1,4-Dioxane	102		-		50-150	-		
Trichloroethene	101		-		70-130	-		
cis-1,3-Dichloropropene	107		-		70-130	-		
4-Methyl-2-pentanone	95		-		70-130	-		
trans-1,3-Dichloropropene	89		-		70-130	-		
1,1,2-Trichloroethane	104		-		70-130	-		
Toluene	108		-		70-130	-		
Dibromochloromethane	107		-		70-130	-		
1,2-Dibromoethane	109		-		70-130	-		
Tetrachloroethene	103		-		70-130	-		
Chlorobenzene	110		-		70-130	-		
Ethylbenzene	110		-		70-130	-		
p/m-Xylene	113		-		70-130	-		
Bromoform	103		-		70-130	-		
Styrene	107		-		70-130	-		
1,1,2,2-Tetrachloroethane	111		-		70-130	-		
o-Xylene	112		-		70-130	-		

Lab Control Sample Analysis
Batch Quality Control

Project Name: NBHS
Project Number: 115058

Lab Number: L1525990
Report Date: 10/21/15

Parameter	LCS %Recovery	Qual	LCSD %Recovery	Qual	%Recovery Limits	RPD	Qual	RPD Limits
MCP Volatile Organics in Air by SIM - Mansfield Lab Associated sample(s): 02 Batch: WG830722-3								
1,3,5-Trimethylbenzene	114		-		70-130	-		
1,2,4-Trimethylbenzene	119		-		70-130	-		
1,3-Dichlorobenzene	116		-		70-130	-		
1,4-Dichlorobenzene	111		-		70-130	-		
1,2-Dichlorobenzene	110		-		70-130	-		
1,2,4-Trichlorobenzene	133		-		50-150	-		
Naphthalene	123		-		50-150	-		
1,2,3-Trichlorobenzene	125		-		70-130	-		
Hexachlorobutadiene	126		-		50-150	-		

Lab Duplicate Analysis
Batch Quality Control

Project Name: NBHS
Project Number: 115058

Lab Number: L1525990
Report Date: 10/21/15

Parameter	Native Sample	Duplicate Sample	Units	RPD	Qual	RPD Limits
MCP Volatile Organics in Air - Mansfield Lab Associated sample(s): 01 QC Batch ID: WG830070-5 QC Sample: L1525990-01 Client ID: VAPOR INLET						
Vinyl chloride	2.52	2.45	ppbV	3		25
Bromomethane	ND	ND	ppbV	NC		25
Acetone	3.69	3.97	ppbV	7		25
1,1-Dichloroethene	ND	ND	ppbV	NC		25
Methylene chloride	ND	ND	ppbV	NC		25
trans-1,2-Dichloroethene	0.716	0.744	ppbV	4		25
1,1-Dichloroethane	ND	ND	ppbV	NC		25
Methyl tert butyl ether	ND	ND	ppbV	NC		25
2-Butanone	0.531	0.528	ppbV	1		25
cis-1,2-Dichloroethene	1.05	1.07	ppbV	2		25
Chloroform	0.281	0.277	ppbV	1		25
1,2-Dichloroethane	ND	ND	ppbV	NC		25
1,1,1-Trichloroethane	ND	ND	ppbV	NC		25
Benzene	ND	ND	ppbV	NC		25
Carbon tetrachloride	ND	ND	ppbV	NC		25
1,2-Dichloropropane	ND	ND	ppbV	NC		25
Bromodichloromethane	ND	ND	ppbV	NC		25
1,4-Dioxane	ND	ND	ppbV	NC		25
Trichloroethene	0.531	0.533	ppbV	0		25

Lab Duplicate Analysis
Batch Quality Control

Project Name: NBHS
Project Number: 115058

Lab Number: L1525990
Report Date: 10/21/15

Parameter	Native Sample	Duplicate Sample	Units	RPD	RPD Limits
MCP Volatile Organics in Air - Mansfield Lab Associated sample(s): 01 QC Batch ID: WG830070-5 QC Sample: L1525990-01 Client ID: VAPOR INLET					
cis-1,3-Dichloropropene	ND	ND	ppbV	NC	25
4-Methyl-2-pentanone	ND	ND	ppbV	NC	25
trans-1,3-Dichloropropene	ND	ND	ppbV	NC	25
1,1,2-Trichloroethane	ND	ND	ppbV	NC	25
Toluene	1.20	1.20	ppbV	0	25
Dibromochloromethane	ND	ND	ppbV	NC	25
1,2-Dibromoethane	ND	ND	ppbV	NC	25
Tetrachloroethene	ND	ND	ppbV	NC	25
Chlorobenzene	ND	ND	ppbV	NC	25
Ethylbenzene	ND	ND	ppbV	NC	25
p/m-Xylene	ND	ND	ppbV	NC	25
Bromoform	ND	ND	ppbV	NC	25
Styrene	ND	ND	ppbV	NC	25
1,1,2,2-Tetrachloroethane	ND	ND	ppbV	NC	25
o-Xylene	ND	ND	ppbV	NC	25
1,3-Dichlorobenzene	ND	ND	ppbV	NC	25
1,4-Dichlorobenzene	ND	ND	ppbV	NC	25
1,2-Dichlorobenzene	ND	ND	ppbV	NC	25
1,2,4-Trichlorobenzene	ND	ND	ppbV	NC	25

Lab Duplicate Analysis
Batch Quality Control

Project Name: NBHS
Project Number: 115058

Lab Number: L1525990
Report Date: 10/21/15

Parameter	Native Sample	Duplicate Sample	Units	RPD	RPD Limits
MCP Volatile Organics in Air - Mansfield Lab Associated sample(s): 01 QC Batch ID: WG830070-5 QC Sample: L1525990-01 Client ID: VAPOR INLET					
Naphthalene	ND	ND	ppbV	NC	25
Hexachlorobutadiene	ND	ND	ppbV	NC	25

Lab Duplicate Analysis
Batch Quality Control

Project Name: NBHS
Project Number: 115058

Lab Number: L1525990
Report Date: 10/21/15

Parameter	Native Sample	Duplicate Sample	Units	RPD	RPD Limits
MCP Volatile Organics in Air by SIM - Mansfield Lab Associated sample(s): 02 QC Batch ID: WG830722-5 QC Sample: L1525990-02 Client ID: VAPOR OUTLET					
Vinyl chloride	2.29	2.29	ppbV	0	25
Bromomethane	ND	ND	ppbV	NC	25
Acetone	2.24	2.23	ppbV	0	25
1,1-Dichloroethene	ND	ND	ppbV	NC	25
Methylene chloride	ND	ND	ppbV	NC	25
trans-1,2-Dichloroethene	0.899	0.899	ppbV	0	25
1,1-Dichloroethane	ND	ND	ppbV	NC	25
Methyl tert butyl ether	ND	ND	ppbV	NC	25
2-Butanone	ND	ND	ppbV	NC	25
cis-1,2-Dichloroethene	2.35	2.37	ppbV	1	25
Chloroform	0.204	0.209	ppbV	2	25
1,2-Dichloroethane	ND	ND	ppbV	NC	25
1,1,1-Trichloroethane	ND	ND	ppbV	NC	25
Benzene	1.04	1.05	ppbV	1	25
Carbon tetrachloride	ND	ND	ppbV	NC	25
1,2-Dichloropropane	ND	ND	ppbV	NC	25
Bromodichloromethane	ND	ND	ppbV	NC	25
1,4-Dioxane	ND	ND	ppbV	NC	25
Trichloroethene	ND	ND	ppbV	NC	25

Lab Duplicate Analysis
Batch Quality Control

Project Name: NBHS
Project Number: 115058

Lab Number: L1525990
Report Date: 10/21/15

Parameter	Native Sample	Duplicate Sample	Units	RPD	RPD Limits
MCP Volatile Organics in Air by SIM - Mansfield Lab Associated sample(s): 02 QC Batch ID: WG830722-5 QC Sample: L1525990-02 Client ID: VAPOR OUTLET					
cis-1,3-Dichloropropene	ND	ND	ppbV	NC	25
4-Methyl-2-pentanone	ND	ND	ppbV	NC	25
trans-1,3-Dichloropropene	ND	ND	ppbV	NC	25
1,1,2-Trichloroethane	ND	ND	ppbV	NC	25
Toluene	0.856	0.855	ppbV	0	25
Dibromochloromethane	ND	ND	ppbV	NC	25
1,2-Dibromoethane	ND	ND	ppbV	NC	25
Tetrachloroethene	ND	ND	ppbV	NC	25
Chlorobenzene	ND	ND	ppbV	NC	25
Ethylbenzene	0.108	0.109	ppbV	1	25
p/m-Xylene	0.362	0.365	ppbV	1	25
Bromoform	ND	ND	ppbV	NC	25
Styrene	0.026	0.025	ppbV	4	25
1,1,2,2-Tetrachloroethane	ND	ND	ppbV	NC	25
o-Xylene	0.118	0.120	ppbV	2	25
1,3-Dichlorobenzene	ND	ND	ppbV	NC	25
1,4-Dichlorobenzene	ND	ND	ppbV	NC	25
1,2-Dichlorobenzene	ND	ND	ppbV	NC	25
1,2,4-Trichlorobenzene	ND	ND	ppbV	NC	25

Lab Duplicate Analysis
Batch Quality Control

Project Name: NBHS
Project Number: 115058

Lab Number: L1525990
Report Date: 10/21/15

Parameter	Native Sample	Duplicate Sample	Units	RPD	RPD Limits
MCP Volatile Organics in Air by SIM - Mansfield Lab Associated sample(s): 02 QC Batch ID: WG830722-5 QC Sample: L1525990-02 Client ID: VAPOR OUTLET					
Naphthalene	ND	ND	ppbV	NC	25
Hexachlorobutadiene	ND	ND	ppbV	NC	25

Project Name: NBHS

Project Number: 115058

Lab Number: L1525990

Report Date: 10/21/15

Canister and Flow Controller Information

Samplenum	Client ID	Media ID	Media Type	Date Prepared	Bottle Order	Cleaning Batch ID	Can Leak Check	Initial Pressure (in. Hg)	Pressure on Receipt (in. Hg)	Flow Controler Leak Chk	Flow Out mL/min	Flow In mL/min	% RPD
L1525990-01	VAPOR INLET	0512	SV200	10/09/15	210833		-	-	-	Pass	211	206	2
L1525990-01	VAPOR INLET	359	2.7L Can	10/09/15	210833	L1524777-01	Pass	-29.5	-1.7	-	-	-	-
L1525990-02	VAPOR OUTLET	0708	SV200	10/09/15	210833		-	-	-	Pass	215	210	2
L1525990-02	VAPOR OUTLET	209	2.7L Can	10/09/15	210833	L1524777-01	Pass	-29.6	-3.0	-	-	-	-

Project Name: BATCH CANISTER CERTIFICATION
Project Number: CANISTER QC BAT

Lab Number: L1524777
Report Date: 10/21/15

Air Canister Certification Results

Lab ID:	L1524777-01	Date Collected:	10/01/15 16:00
Client ID:	CAN 1737 SHELF 2	Date Received:	10/02/15
Sample Location:		Field Prep:	Not Specified
Matrix:	Air		
Anaytical Method:	48,TO-15		
Analytical Date:	10/02/15 21:38		
Analyst:	RY		

	ppbV			ug/m3				
Parameter	**Results**	**RL**	**MDL**	**Results**	**RL**	**MDL**	**Qualifier**	**Dilution Factor**
Volatile Organics in Air - Mansfield Lab								
Chlorodifluoromethane	ND	0.200	--	ND	0.707	--		1
Propylene	ND	0.500	--	ND	0.861	--		1
Propane	ND	0.500	--	ND	0.902	--		1
Dichlorodifluoromethane	ND	0.200	--	ND	0.989	--		1
Chloromethane	ND	0.200	--	ND	0.413	--		1
Freon-114	ND	0.200	--	ND	1.40	--		1
Methanol	ND	5.00	--	ND	6.55	--		1
Vinyl chloride	ND	0.200	--	ND	0.511	--		1
1,3-Butadiene	ND	0.200	--	ND	0.442	--		1
Butane	ND	0.200	--	ND	0.475	--		1
Bromomethane	ND	0.200	--	ND	0.777	--		1
Chloroethane	ND	0.200	--	ND	0.528	--		1
Ethanol	ND	2.50	--	ND	4.71	--		1
Dichlorofluoromethane	ND	0.200	--	ND	0.842	--		1
Vinyl bromide	ND	0.200	--	ND	0.874	--		1
Acrolein	ND	0.500	--	ND	1.15	--		1
Acetone	ND	1.00	--	ND	2.38	--		1
Acetonitrile	ND	0.200	--	ND	0.336	--		1
Trichlorofluoromethane	ND	0.200	--	ND	1.12	--		1
Isopropanol	ND	0.500	--	ND	1.23	--		1
Acrylonitrile	ND	0.500	--	ND	1.09	--		1
Pentane	ND	0.200	--	ND	0.590	--		1
Ethyl ether	ND	0.200	--	ND	0.606	--		1
1,1-Dichloroethene	ND	0.200	--	ND	0.793	--		1
Tertiary butyl Alcohol	ND	0.500	--	ND	1.52	--		1

Project Name: BATCH CANISTER CERTIFICATION **Lab Number:** L1524777

Project Number: CANISTER QC BAT **Report Date:** 10/21/15

Air Canister Certification Results

Lab ID: L1524777-01 Date Collected: 10/01/15 16:00

Client ID: CAN 1737 SHELF 2 Date Received: 10/02/15

Sample Location: Field Prep: Not Specified

Parameter	ppbV Results	ppbV RL	ppbV MDL	ug/m3 Results	ug/m3 RL	ug/m3 MDL	Qualifier	Dilution Factor
Volatile Organics in Air - Mansfield Lab								
Methylene chloride	ND	0.500	--	ND	1.74	--		1
3-Chloropropene	ND	0.200	--	ND	0.626	--		1
Carbon disulfide	ND	0.200	--	ND	0.623	--		1
Freon-113	ND	0.200	--	ND	1.53	--		1
trans-1,2-Dichloroethene	ND	0.200	--	ND	0.793	--		1
1,1-Dichloroethane	ND	0.200	--	ND	0.809	--		1
Methyl tert butyl ether	ND	0.200	--	ND	0.721	--		1
Vinyl acetate	ND	1.00	--	ND	3.52	--		1
2-Butanone	ND	0.500	--	ND	1.47	--		1
cis-1,2-Dichloroethene	ND	0.200	--	ND	0.793	--		1
Ethyl Acetate	ND	0.500	--	ND	1.80	--		1
Chloroform	ND	0.200	--	ND	0.977	--		1
Tetrahydrofuran	ND	0.500	--	ND	1.47	--		1
2,2-Dichloropropane	ND	0.200	--	ND	0.924	--		1
1,2-Dichloroethane	ND	0.200	--	ND	0.809	--		1
n-Hexane	ND	0.200	--	ND	0.705	--		1
Diisopropyl ether	ND	0.200	--	ND	0.836	--		1
tert-Butyl Ethyl Ether	ND	0.200	--	ND	0.836	--		1
1,1,1-Trichloroethane	ND	0.200	--	ND	1.09	--		1
1,1-Dichloropropene	ND	0.200	--	ND	0.908	--		1
Benzene	ND	0.200	--	ND	0.639	--		1
Carbon tetrachloride	ND	0.200	--	ND	1.26	--		1
Cyclohexane	ND	0.200	--	ND	0.688	--		1
tert-Amyl Methyl Ether	ND	0.200	--	ND	0.836	--		1
Dibromomethane	ND	0.200	--	ND	1.42	--		1
1,2-Dichloropropane	ND	0.200	--	ND	0.924	--		1
Bromodichloromethane	ND	0.200	--	ND	1.34	--		1
1,4-Dioxane	ND	0.200	--	ND	0.721	--		1

Project Name: BATCH CANISTER CERTIFICATION **Lab Number:** L1524777

Project Number: CANISTER QC BAT **Report Date:** 10/21/15

Air Canister Certification Results

Lab ID: L1524777-01 Date Collected: 10/01/15 16:00

Client ID: CAN 1737 SHELF 2 Date Received: 10/02/15

Sample Location: Field Prep: Not Specified

Parameter	ppbV Results	ppbV RL	ppbV MDL	ug/m3 Results	ug/m3 RL	ug/m3 MDL	Qualifier	Dilution Factor
Volatile Organics in Air - Mansfield Lab								
Trichloroethene	ND	0.200	--	ND	1.07	--		1
2,2,4-Trimethylpentane	ND	0.200	--	ND	0.934	--		1
Methyl Methacrylate	ND	0.500	--	ND	2.05	--		1
Heptane	ND	0.200	--	ND	0.820	--		1
cis-1,3-Dichloropropene	ND	0.200	--	ND	0.908	--		1
4-Methyl-2-pentanone	ND	0.500	--	ND	2.05	--		1
trans-1,3-Dichloropropene	ND	0.200	--	ND	0.908	--		1
1,1,2-Trichloroethane	ND	0.200	--	ND	1.09	--		1
Toluene	ND	0.200	--	ND	0.754	--		1
1,3-Dichloropropane	ND	0.200	--	ND	0.924	--		1
2-Hexanone	ND	0.200	--	ND	0.820	--		1
Dibromochloromethane	ND	0.200	--	ND	1.70	--		1
1,2-Dibromoethane	ND	0.200	--	ND	1.54	--		1
Butyl acetate	ND	0.500	--	ND	2.38	--		1
Octane	ND	0.200	--	ND	0.934	--		1
Tetrachloroethene	ND	0.200	--	ND	1.36	--		1
1,1,1,2-Tetrachloroethane	ND	0.200	--	ND	1.37	--		1
Chlorobenzene	ND	0.200	--	ND	0.921	--		1
Ethylbenzene	ND	0.200	--	ND	0.869	--		1
p/m-Xylene	ND	0.400	--	ND	1.74	--		1
Bromoform	ND	0.200	--	ND	2.07	--		1
Styrene	ND	0.200	--	ND	0.852	--		1
1,1,2,2-Tetrachloroethane	ND	0.200	--	ND	1.37	--		1
o-Xylene	ND	0.200	--	ND	0.869	--		1
1,2,3-Trichloropropane	ND	0.200	--	ND	1.21	--		1
Nonane	ND	0.200	--	ND	1.05	--		1
Isopropylbenzene	ND	0.200	--	ND	0.983	--		1
Bromobenzene	ND	0.200	--	ND	0.793	--		1

Project Name: BATCH CANISTER CERTIFICATION **Lab Number:** L1524777

Project Number: CANISTER QC BAT **Report Date:** 10/21/15

Air Canister Certification Results

Lab ID: L1524777-01 Date Collected: 10/01/15 16:00

Client ID: CAN 1737 SHELF 2 Date Received: 10/02/15

Sample Location: Field Prep: Not Specified

Parameter	ppbV Results	ppbV RL	ppbV MDL	ug/m3 Results	ug/m3 RL	ug/m3 MDL	Qualifier	Dilution Factor
Volatile Organics in Air - Mansfield Lab								
2-Chlorotoluene	ND	0.200	--	ND	1.04	--		1
n-Propylbenzene	ND	0.200	--	ND	0.983	--		1
4-Chlorotoluene	ND	0.200	--	ND	1.04	--		1
4-Ethyltoluene	ND	0.200	--	ND	0.983	--		1
1,3,5-Trimethylbenzene	ND	0.200	--	ND	0.983	--		1
tert-Butylbenzene	ND	0.200	--	ND	1.10	--		1
1,2,4-Trimethylbenzene	ND	0.200	--	ND	0.983	--		1
Decane	ND	0.200	--	ND	1.16	--		1
Benzyl chloride	ND	0.200	--	ND	1.04	--		1
1,3-Dichlorobenzene	ND	0.200	--	ND	1.20	--		1
1,4-Dichlorobenzene	ND	0.200	--	ND	1.20	--		1
sec-Butylbenzene	ND	0.200	--	ND	1.10	--		1
p-Isopropyltoluene	ND	0.200	--	ND	1.10	--		1
1,2-Dichlorobenzene	ND	0.200	--	ND	1.20	--		1
n-Butylbenzene	ND	0.200	--	ND	1.10	--		1
1,2-Dibromo-3-chloropropane	ND	0.200	--	ND	1.93	--		1
Undecane	ND	0.200	--	ND	1.28	--		1
Dodecane	ND	0.500	--	ND	3.48	--		1
1,2,4-Trichlorobenzene	ND	0.200	--	ND	1.48	--		1
Naphthalene	ND	0.200	--	ND	1.05	--		1
1,2,3-Trichlorobenzene	ND	0.200	--	ND	1.48	--		1
Hexachlorobutadiene	ND	0.200	--	ND	2.13	--		1

	Results	Qualifier	Units	RDL	Dilution Factor
Tentatively Identified Compounds					
No Tentatively Identified Compounds					

Project Name: BATCH CANISTER CERTIFICATION **Lab Number:** L1524777

Project Number: CANISTER QC BAT **Report Date:** 10/21/15

Air Canister Certification Results

Lab ID: L1524777-01 Date Collected: 10/01/15 16:00

Client ID: CAN 1737 SHELF 2 Date Received: 10/02/15

Sample Location: Field Prep: Not Specified

Parameter	ppbV Results	ppbV RL	ppbV MDL	ug/m3 Results	ug/m3 RL	ug/m3 MDL	Qualifier	Dilution Factor
Volatile Organics in Air - Mansfield Lab								

Internal Standard	% Recovery	Qualifier	Acceptance Criteria
1,4-Difluorobenzene	96		60-140
Bromochloromethane	94		60-140
chlorobenzene-d5	94		60-140

Project Name: BATCH CANISTER CERTIFICATION
Project Number: CANISTER QC BAT

Lab Number: L1524777
Report Date: 10/21/15

Air Canister Certification Results

Lab ID:	L1524777-01	Date Collected:	10/01/15 16:00
Client ID:	CAN 1737 SHELF 2	Date Received:	10/02/15
Sample Location:		Field Prep:	Not Specified
Matrix:	Air		
Anaytical Method:	48,TO-15-SIM		
Analytical Date:	10/02/15 21:38		
Analyst:	RY		

	ppbV			ug/m3				
Parameter	**Results**	**RL**	**MDL**	**Results**	**RL**	**MDL**	**Qualifier**	**Dilution Factor**
Volatile Organics in Air by SIM - Mansfield Lab								
Dichlorodifluoromethane	ND	0.200	--	ND	0.989	--		1
Chloromethane	ND	0.200	--	ND	0.413	--		1
Freon-114	ND	0.050	--	ND	0.349	--		1
Vinyl chloride	ND	0.020	--	ND	0.051	--		1
1,3-Butadiene	ND	0.020	--	ND	0.044	--		1
Bromomethane	ND	0.020	--	ND	0.078	--		1
Chloroethane	ND	0.020	--	ND	0.053	--		1
Acetone	ND	1.00	--	ND	2.38	--		1
Trichlorofluoromethane	ND	0.050	--	ND	0.281	--		1
Acrylonitrile	ND	0.500	--	ND	1.09	--		1
1,1-Dichloroethene	ND	0.020	--	ND	0.079	--		1
Methylene chloride	ND	0.500	--	ND	1.74	--		1
Freon-113	ND	0.050	--	ND	0.383	--		1
Halothane	ND	0.050	--	ND	0.404	--		1
trans-1,2-Dichloroethene	ND	0.020	--	ND	0.079	--		1
1,1-Dichloroethane	ND	0.020	--	ND	0.081	--		1
Methyl tert butyl ether	ND	0.200	--	ND	0.721	--		1
2-Butanone	ND	0.500	--	ND	1.47	--		1
cis-1,2-Dichloroethene	ND	0.020	--	ND	0.079	--		1
Chloroform	ND	0.020	--	ND	0.098	--		1
1,2-Dichloroethane	ND	0.020	--	ND	0.081	--		1
1,1,1-Trichloroethane	ND	0.020	--	ND	0.109	--		1
Benzene	ND	0.100	--	ND	0.319	--		1
Carbon tetrachloride	ND	0.020	--	ND	0.126	--		1
1,2-Dichloropropane	ND	0.020	--	ND	0.092	--		1

Project Name: BATCH CANISTER CERTIFICATION **Lab Number:** L1524777

Project Number: CANISTER QC BAT **Report Date:** 10/21/15

Air Canister Certification Results

Lab ID: L1524777-01 Date Collected: 10/01/15 16:00

Client ID: CAN 1737 SHELF 2 Date Received: 10/02/15

Sample Location: Field Prep: Not Specified

	ppbV			ug/m3				
Parameter	**Results**	**RL**	**MDL**	**Results**	**RL**	**MDL**	**Qualifier**	**Dilution Factor**
Volatile Organics in Air by SIM - Mansfield Lab								
Bromodichloromethane	ND	0.020	--	ND	0.134	--		1
1,4-Dioxane	ND	0.100	--	ND	0.360	--		1
Trichloroethene	ND	0.020	--	ND	0.107	--		1
cis-1,3-Dichloropropene	ND	0.020	--	ND	0.091	--		1
4-Methyl-2-pentanone	ND	0.500	--	ND	2.05	--		1
trans-1,3-Dichloropropene	ND	0.020	--	ND	0.091	--		1
1,1,2-Trichloroethane	ND	0.020	--	ND	0.109	--		1
Toluene	ND	0.050	--	ND	0.188	--		1
Dibromochloromethane	ND	0.020	--	ND	0.170	--		1
1,2-Dibromoethane	ND	0.020	--	ND	0.154	--		1
Tetrachloroethene	ND	0.020	--	ND	0.136	--		1
1,1,1,2-Tetrachloroethane	ND	0.020	--	ND	0.137	--		1
Chlorobenzene	ND	0.020	--	ND	0.092	--		1
Ethylbenzene	ND	0.020	--	ND	0.087	--		1
p/m-Xylene	ND	0.040	--	ND	0.174	--		1
Bromoform	ND	0.020	--	ND	0.207	--		1
Styrene	ND	0.020	--	ND	0.085	--		1
1,1,2,2-Tetrachloroethane	ND	0.020	--	ND	0.137	--		1
o-Xylene	ND	0.020	--	ND	0.087	--		1
Isopropylbenzene	ND	0.200	--	ND	0.983	--		1
4-Ethyltoluene	ND	0.020	--	ND	0.098	--		1
1,3,5-Trimethybenzene	ND	0.020	--	ND	0.098	--		1
1,2,4-Trimethylbenzene	ND	0.020	--	ND	0.098	--		1
1,3-Dichlorobenzene	ND	0.020	--	ND	0.120	--		1
1,4-Dichlorobenzene	ND	0.020	--	ND	0.120	--		1
sec-Butylbenzene	ND	0.200	--	ND	1.10	--		1
p-Isopropyltoluene	ND	0.200	--	ND	1.10	--		1
1,2-Dichlorobenzene	ND	0.020	--	ND	0.120	--		1

Project Name: BATCH CANISTER CERTIFICATION **Lab Number:** L1524777

Project Number: CANISTER QC BAT **Report Date:** 10/21/15

Air Canister Certification Results

Lab ID: L1524777-01 Date Collected: 10/01/15 16:00

Client ID: CAN 1737 SHELF 2 Date Received: 10/02/15

Sample Location: Field Prep: Not Specified

Parameter	ppbV Results	ppbV RL	ppbV MDL	ug/m3 Results	ug/m3 RL	ug/m3 MDL	Qualifier	Dilution Factor
Volatile Organics in Air by SIM - Mansfield Lab								
n-Butylbenzene	ND	0.200	--	ND	1.10	--		1
1,2,4-Trichlorobenzene	ND	0.050	--	ND	0.371	--		1
Naphthalene	ND	0.050	--	ND	0.262	--		1
1,2,3-Trichlorobenzene	ND	0.050	--	ND	0.371	--		1
Hexachlorobutadiene	ND	0.050	--	ND	0.533	--		1

Internal Standard	% Recovery	Qualifier	Acceptance Criteria
1,4-difluorobenzene	98		60-140
bromochloromethane	101		60-140
chlorobenzene-d5	100		60-140

Project Name: NBHS
Project Number: 115058

Lab Number: L1525990
Report Date: 10/21/15

Sample Receipt and Container Information

Were project specific reporting limits specified? YES

Cooler Information	Custody Seal
Cooler	
N/A	Absent

Container Information

Container ID	Container Type	Cooler	pH	Temp deg C	Pres	Seal	Analysis(*)
L1525990-01A	Canister - 2.7 Liter	N/A	N/A		Y	Absent	MCP-TO15(30)
L1525990-02A	Canister - 2.7 Liter	N/A	N/A		Y	Absent	MCP-TO15-SIM(30)

*Values in parentheses indicate holding time in days

Project Name:	NBHS	**Lab Number:**	L1525990
Project Number:	115058	**Report Date:**	10/21/15

GLOSSARY

Acronyms

EDL	- Estimated Detection Limit: This value represents the level to which target analyte concentrations are reported as estimated values, when those target analyte concentrations are quantified below the reporting limit (RL). The EDL includes any adjustments from dilutions, concentrations or moisture content, where applicable. The use of EDLs is specific to the analysis of PAHs using Solid-Phase Microextraction (SPME).
EPA	- Environmental Protection Agency.
LCS	- Laboratory Control Sample: A sample matrix, free from the analytes of interest, spiked with verified known amounts of analytes or a material containing known and verified amounts of analytes.
LCSD	- Laboratory Control Sample Duplicate: Refer to LCS.
LFB	- Laboratory Fortified Blank: A sample matrix, free from the analytes of interest, spiked with verified known amounts of analytes or a material containing known and verified amounts of analytes.
MDL	- Method Detection Limit: This value represents the level to which target analyte concentrations are reported as estimated values, when those target analyte concentrations are quantified below the reporting limit (RL). The MDL includes any adjustments from dilutions, concentrations or moisture content, where applicable.
MS	- Matrix Spike Sample: A sample prepared by adding a known mass of target analyte to a specified amount of matrix sample for which an independent estimate of target analyte concentration is available.
MSD	- Matrix Spike Sample Duplicate: Refer to MS.
NA	- Not Applicable.
NC	- Not Calculated: Term is utilized when one or more of the results utilized in the calculation are non-detect at the parameter's reporting unit.
NI	- Not Ignitable.
NP	- Non-Plastic: Term is utilized for the analysis of Atterberg Limits in soil.
RL	- Reporting Limit: The value at which an instrument can accurately measure an analyte at a specific concentration. The RL includes any adjustments from dilutions, concentrations or moisture content, where applicable.
RPD	- Relative Percent Difference: The results from matrix and/or matrix spike duplicates are primarily designed to assess the precision of analytical results in a given matrix and are expressed as relative percent difference (RPD). Values which are less than five times the reporting limit for any individual parameter are evaluated by utilizing the absolute difference between the values; although the RPD value will be provided in the report.
SRM	- Standard Reference Material: A reference sample of a known or certified value that is of the same or similar matrix as the associated field samples.
STLP	- Semi-dynamic Tank Leaching Procedure per EPA Method 1315.
TIC	- Tentatively Identified Compound: A compound that has been identified to be present and is not part of the target compound list (TCL) for the method and/or program. All TICs are qualitatively identified and reported as estimated concentrations.

Footnotes

1	- The reference for this analyte should be considered modified since this analyte is absent from the target analyte list of the original method.

Terms

Total: With respect to Organic analyses, a 'Total' result is defined as the summation of results for individual isomers or Aroclors. If a 'Total' result is requested, the results of its individual components will also be reported. This is applicable to 'Total' results for methods 8260, 8081 and 8082.

Analytical Method: Both the document from which the method originates and the analytical reference method. (Example: EPA 8260B is shown as 1,8260B.) The codes for the reference method documents are provided in the References section of the Addendum.

Data Qualifiers

A	- Spectra identified as "Aldol Condensation Product".
B	- The analyte was detected above the reporting limit in the associated method blank. Flag only applies to associated field samples that have detectable concentrations of the analyte at less than ten times (10x) the concentration found in the blank. For MCP-related projects, flag only applies to associated field samples that have detectable concentrations of the analyte at less than ten times (10x) the concentration found in the blank. For DOD-related projects, flag only applies to associated field samples that have detectable concentrations of the analyte at less than ten times (10x) the concentration found in the blank AND the analyte was detected above one-half the reporting limit (or above the reporting limit for common lab contaminants) in the associated method blank. For NJ-Air-related projects, flag only applies to associated field samples that have detectable concentrations of the analyte above the reporting limit. For NJ-related projects (excluding Air), flag only applies to associated field samples that have detectable concentrations of the analyte, which was detected above the reporting limit in the associated method blank or above five times the reporting limit for common lab contaminants (Phthalates, Acetone, Methylene Chloride, 2-Butanone).

Report Format: Data Usability Report

Project Name:	NBHS	**Lab Number:**	L1525990
Project Number:	115058	**Report Date:**	10/21/15

Data Qualifiers

C - Co-elution: The target analyte co-elutes with a known lab standard (i.e. surrogate, internal standards, etc.) for co-extracted analyses.

D - Concentration of analyte was quantified from diluted analysis. Flag only applies to field samples that have detectable concentrations of the analyte.

E - Concentration of analyte exceeds the range of the calibration curve and/or linear range of the instrument.

G - The concentration may be biased high due to matrix interferences (i.e, co-elution) with non-target compound(s). The result should be considered estimated.

H - The analysis of pH was performed beyond the regulatory-required holding time of 15 minutes from the time of sample collection.

I - The lower value for the two columns has been reported due to obvious interference.

M - Reporting Limit (RL) exceeds the MCP CAM Reporting Limit for this analyte.

NJ - Presumptive evidence of compound. This represents an estimated concentration for Tentatively Identified Compounds (TICs), where the identification is based on a mass spectral library search.

P - The RPD between the results for the two columns exceeds the method-specified criteria.

Q - The quality control sample exceeds the associated acceptance criteria. For DOD-related projects, LCS and/or Continuing Calibration Standard exceedences are also qualified on all associated sample results. Note: This flag is not applicable for matrix spike recoveries when the sample concentration is greater than 4x the spike added or for batch duplicate RPD when the sample concentrations are less than 5x the RL. (Metals only.)

R - Analytical results are from sample re-analysis.

RE - Analytical results are from sample re-extraction.

S - Analytical results are from modified screening analysis.

J - Estimated value. This represents an estimated concentration for Tentatively Identified Compounds (TICs).

ND - Not detected at the reporting limit (RL) for the sample.

Report Format: Data Usability Report

Project Name: NBHS
Project Number: 115058
Lab Number: L1525990
Report Date: 10/21/15

REFERENCES

101 Compendium of Methods for the Determination of Toxic Organic Compounds in Ambient Air (EPA/625/R-96/010b:January 1999) with QC Requirements & Performance Standards for the Analysis of TO-15 under the Massachusetts Contingency Plan, WSC-CAM-IXB, July 2010.

LIMITATION OF LIABILITIES

Alpha Analytical performs services with reasonable care and diligence normal to the analytical testing laboratory industry. In the event of an error, the sole and exclusive responsibility of Alpha Analytical shall be to re-perform the work at it's own expense. In no event shall Alpha Analytical be held liable for any incidental, consequential or special damages, including but not limited to, damages in any way connected with the use of, interpretation of, information or analysis provided by Alpha Analytical.

We strongly urge our clients to comply with EPA protocol regarding sample volume, preservation, cooling, containers, sampling procedures, holding time and splitting of samples in the field.

Certification Information

The following analytes are not included in our Primary NELAP Scope of Accreditation:

Westborough Facility
EPA 8260C: 1,2,4,5-Tetramethylbenzene, 4-Ethyltoluene, Iodomethane (methyl iodide) (soil), Methyl methacrylate (soil), Azobenzene.
EPA 8270D: Dimethylnaphthalene,1,4-Diphenylhydrazine.
EPA 625: 4-Chloroaniline, 4-Methylphenol.
SM4500: Soil: Total Phosphorus, TKN, NO2, NO3.

Mansfield Facility
EPA 8270D: Biphenyl.
EPA 2540D: TSS
EPA TO-15: Halothane, 2,4,4-Trimethyl-2-pentene, 2,4,4-Trimethyl-1-pentene, Thiophene, 2-Methylthiophene, 3-Methylthiophene, 2-Ethylthiophene, 1,2,3-Trimethylbenzene, Indan, Indene, 1,2,4,5-Tetramethylbenzene, Benzothiophene, 1-Methylnaphthalene.

The following analytes are included in our Massachusetts DEP Scope of Accreditation, Westborough Facility:

Drinking Water
EPA 200.8: Sb,As,Ba,Be,Cd,Cr,Cu,Pb,Ni,Se,Tl; **EPA 200.7**: Ba,Be,Ca,Cd,Cr,Cu,Na; **EPA 245.1:** Mercury;
EPA 300.0: Nitrate-N, Fluoride, Sulfate; **EPA 353.2**: Nitrate-N, Nitrite-N; **SM4500NO3-F**: Nitrate-N, Nitrite-N; **SM4500F-C, SM4500CN-CE, EPA 180.1, SM2130B, SM4500Cl-D, SM2320B, SM2540C, SM4500H-B**
EPA 332: Perchlorate.
Microbiology: **SM9215B; SM9223-P/A, SM9223B-Colilert-QT, Enterolert-QT.**

Non-Potable Water
EPA 200.8: Al,Sb,As,Be,Cd,Cr,Cu,Pb,Mn,Ni,Se,Ag,Tl,Zn;
EPA 200.7: Al,Sb,As,Be,Cd,Ca,Cr,Co,Cu,Fe,Pb,Mg,Mn,Mo,Ni,K,Se,Ag,Na,Sr,Ti,Tl,V,Zn;
EPA 245.1, SM4500H,B, EPA 120.1, SM2510B, SM2540C, SM2340B, SM2320B, SM4500CL-E, SM4500F-BC, SM426C, SM4500NH3-BH, **EPA 350.1**: Ammonia-N, **LACHAT 10-107-06-1-B**: Ammonia-N, **SM4500NO3-F, EPA 353.2**: Nitrate-N**, SM4500NH3-BC-NES, EPA 351.1, SM4500P-E, SM4500P-B, E, SM5220D, EPA 410.4, SM5210B, SM5310C, SM4500CL-D, EPA 1664, SM14 510AC, EPA 420.1, SM4500-CN-CE, SM2540D.**
EPA 624: Volatile Halocarbons & Aromatics,
EPA 608: Chlordane, Toxaphene, Aldrin, alpha-BHC, beta-BHC, gamma-BHC, delta-BHC, Dieldrin, DDD, DDE, DDT, Endosulfan I, Endosulfan II, Endosulfan sulfate, Endrin, Endrin Aldehyde, Heptachlor, Heptachlor Epoxide, PCBs
EPA 625: SVOC (Acid/Base/Neutral Extractables), **EPA 600/4-81-045**: PCB-Oil.
Microbiology: **SM9223B-Colilert-QT; Enterolert-QT, SM9222D-MF**.

For a complete listing of analytes and methods, please contact your Alpha Project Manager.

AIR ANALYSIS

PAGE 1 OF 1

CHAIN OF CUSTODY

ALPHA ANALYTICAL
320 Forbes Blvd, Mansfield, MA 02048
TEL: 508-822-9300 FAX: 508-822-3288

Date Rec'd in Lab: 10/14/15

ALPHA Job #: L1525990

Client Information

Client: TRC
Address: 650 SUFFOLK ST
LOWELL MA
Phone:
Fax:
Email:
☐ These samples have been previously analyzed by Alpha

Project Information

Project Name: NBHS
Project Location: NEW BEDFORD
Project #:
Project Manager: DAVID SULLIVAN
ALPHA Quote #:

Turn-Around Time

☑ Standard ☐ RUSH (only confirmed if pre-approved!)
5 DAY
Date Due: Time:

Report Information - Data Deliverables

☑ FAX
☐ ADEx
Criteria Checker:
(Default based on Regulatory Criteria Indicated)
Other Formats:
☐ EMAIL (standard pdf report)
☐ Additional Deliverables:
Report to: (if different than Project Manager)

Billing Information

☐ Same as Client info PO #: C115058

Regulatory Requirements/Report Limits

State/Fed	Program	Criteria

Other Project Specific Requirements/Comments:

All Columns Below Must Be Filled Out

ALPHA Lab ID (Lab Use Only)	Sample ID	Collection Date	Start Time	End Time	Initial Vacuum	Final Vacuum	Sample Matrix*	Sampler's Initials	Can Size	I D Can	I D - Flow Controller	TO-14A by TO-15	TO-15	TO-15 SIM	APH	FIXED GASES	TO-13A	TO-4 / TO-10	Sample Comments (i.e. PID)
25990-01	VAPOR INLET	10/13/15	7:45	7:57	-30	-1.98	GW	JF	2.7	359	0502		✓						
-02	VAPOR OUTLET	"	7:48	8:00	-29.6	-2.50	O	JF	2.7	209	0708			✓					

*SAMPLE MATRIX CODES
AA = Ambient Air (Indoor/Outdoor)
SV = Soil Vapor/Landfill Gas/SVE
Other = Please Specify

Container Type			CA	CA			

Relinquished By:	Date/Time	Received By:	Date/Time:
[signature]	10/14/15	[signature] ALPHA	10/14/15 0950
[signature]	10/14/15 1010	[signature]	10/14/15 10:10

Please print clearly, legibly and completely. Samples can not be logged in and turnaround time clock will not start until any ambiguities are resolved. All samples submitted are subject to Alpha's Terms and Conditions. See reverse side.

ANALYTICAL REPORT

Lab Number:	L1525995
Client:	TRC Environmental Consultants Wannalancit Mills 650 Suffolk Street Lowell, MA 01854
ATTN:	David Sullivan
Phone:	(978) 656-3565
Project Name:	NBHS
Project Number:	115058
Report Date:	10/29/15

The original project report/data package is held by Alpha Analytical. This report/data package is paginated and should be reproduced only in its entirety. Alpha Analytical holds no responsibility for results and/or data that are not consistent with the original.

Certifications & Approvals: NY (11627), CT (PH-0141), NH (2206), NJ NELAP (MA015), RI (LAO00299), ME (MA00030), PA (68-02089), VA (460194), LA NELAP (03090), FL (E87814), TX (T104704419), WA (C954), USFWS (Permit #LE2069641), USDA (Permit #P330-11-00109), US Army Corps of Engineers.

320 Forbes Boulevard, Mansfield, MA 02048-1806
508-822-9300 (Fax) 508-822-3288 800-624-9220 - www.alphalab.com

Project Name: NBHS
Project Number: 115058

Lab Number: L1525995
Report Date: 10/29/15

Alpha Sample ID	Client ID	Matrix	Sample Location	Collection Date/Time	Receive Date
L1525995-01	VAPOR INLET	AIR MEDIA	NEW BEDFORD	10/13/15 12:17	10/14/15
L1525995-02	VAPOR OUTLET	AIR MEDIA	NEW BEDFORD	10/13/15 12:19	10/14/15

Project Name: NBHS
Project Number: 115058

Lab Number: L1525995
Report Date: 10/29/15

Case Narrative

The samples were received in accordance with the Chain of Custody and no significant deviations were encountered during the preparation or analysis unless otherwise noted. Sample Receipt, Container Information, and the Chain of Custody are located at the back of the report.

Results contained within this report relate only to the samples submitted under this Alpha Lab Number and meet all of the requirements of NELAC, for all NELAC accredited parameters. The data presented in this report is organized by parameter (i.e. VOC, SVOC, etc.). Sample specific Quality Control data (i.e. Surrogate Spike Recovery) is reported at the end of the target analyte list for each individual sample, followed by the Laboratory Batch Quality Control at the end of each parameter. Tentatively Identified Compounds (TICs), if requested, are reported for compounds identified to be present and are not part of the method/program Target Compound List, even if only a subset of the TCL are being reported. If a sample was re-analyzed or re-extracted due to a required quality control corrective action and if both sets of data are reported, the Laboratory ID of the re-analysis or re-extraction is designated with an "R" or "RE", respectively. When multiple Batch Quality Control elements are reported (e.g. more than one LCS), the associated samples for each element are noted in the grey shaded header line of each data table. Any Laboratory Batch, Sample Specific % recovery or RPD value that is outside the listed Acceptance Criteria is bolded in the report. All specific QC information is also incorporated in the Data Usability format of our Data Merger tool where it can be reviewed along with any associated usability implications. Soil/sediments, solids and tissues are reported on a dry weight basis unless otherwise noted. Definitions of all data qualifiers and acronyms used in this report are provided in the Glossary located at the back of the report.

In reference to questions H (CAM) or 4 (RCP) when "NO" is checked, the performance criteria for CAM and RCP methods allow for some quality control failures to occur and still be within method compliance. In these instances the specific failure is not narrated but noted in the associated QC table. The information is also incorporated in the Data Usability format of our Data Merger tool where it can be reviewed along with any associated usability implications.

Please see the associated ADEx data file for a comparison of laboratory reporting limits that were achieved with the regulatory Numerical Standards requested on the Chain of Custody.

HOLD POLICY
For samples submitted on hold, Alpha's policy is to hold samples (with the exception of Air canisters) free of charge for 21 calendar days from the date the project is completed. After 21 calendar days, we will dispose of all samples submitted including those put on hold unless you have contacted your Client Service Representative and made arrangements for Alpha to continue to hold the samples. Air canisters will be disposed after 3 business days from the date the project is completed.

Please contact Client Services at 800-624-9220 with any questions.

Project Name: NBHS **Lab Number:** L1525995
Project Number: 115058 **Report Date:** 10/29/15

Case Narrative (continued)

PCB Aroclors in Air

The opening continuing calibration standard WG832140-6, associated with sample L1525995-01D, had the response for the surrogate Decachlorobiphenyl (DCB) (24.4%D-column B) and the closing continuing calibration standard WG832140-7 had the response for the surrogate Decachlorobiphenyl (DCB) (24.3%D-column B) below the acceptance criteria. The surrogate recoveries in the associated samples were within criteria; therefore no further action was taken.

Sample L1525995-01 had the Aroclor 1242 recover above the upper calibration limit. As a result the sample was analyzed at dilution. The diluted analysis was only evaluated for Aroclor 1242.

The surrogate recoveries for sample L1525995-02 were outside of the acceptance criteria for Tetrachloro-meta-xylene (TCMX) (11%-column A; 10%-columnB) and Decachlorobiphenyl (DCB) (55%-column A; 55% column B). It was noted during the extraction procedure that a limited solvent volume was recovered after the extraction via soxhlet. The sample was consumed during the initial extraction; therefore a re-extraction could not be peformed.

I, the undersigned, attest under the pains and penalties of perjury that, to the best of my knowledge and belief and based upon my personal inquiry of those responsible for providing the information contained in this analytical report, such information is accurate and complete. This certificate of analysis is not complete unless this page accompanies any and all pages of this report.

Authorized Signature: Christopher J. Anderson

Title: Technical Director/Representative Date: 10/29/15

AIR

Project Name: NBHS
Project Number: 115058

Lab Number: L1525995
Report Date: 10/29/15

SAMPLE RESULTS

Lab ID:	L1525995-01	Date Collected:	10/13/15 12:17
Client ID:	VAPOR INLET	Date Received:	10/14/15
Sample Location:	NEW BEDFORD	Field Prep:	Not Specified
Matrix:	Air Media	Extraction Method:	EPA 3540C
Analytical Method:	48,TO-10A	Extraction Date:	10/15/15 13:10
Analytical Date:	10/19/15 21:42		
Analyst:	SA		

Parameter	Result	Qualifier	Units	RL	MDL	Dilution Factor	Column
PCB Aroclors in Air - Mansfield Lab							
Aroclor 1016	ND		ng/cart	30.0	--	1	A
Aroclor 1221	ND		ng/cart	100	--	1	A
Aroclor 1232	ND		ng/cart	30.0	--	1	A
Aroclor 1248	ND		ng/cart	20.0	--	1	A
Aroclor 1254	ND		ng/cart	20.0	--	1	A
Aroclor 1260	ND		ng/cart	20.0	--	1	A
Aroclor 1262	ND		ng/cart	20.0	--	1	A
Aroclor 1268	ND		ng/cart	20.0	--	1	A

Surrogate	% Recovery	Qualifier	Acceptance Criteria	Column
Tetrachloro-meta-Xylene	76		60-120	A
Decachlorobiphenyl	95		60-120	A
Tetrachloro-meta-Xylene	78		60-120	B
Decachlorobiphenyl	87		60-120	B

Project Name: NBHS
Project Number: 115058

Lab Number: L1525995
Report Date: 10/29/15

SAMPLE RESULTS

Lab ID:	L1525995-01	D	Date Collected:	10/13/15 12:17
Client ID:	VAPOR INLET		Date Received:	10/14/15
Sample Location:	NEW BEDFORD		Field Prep:	Not Specified
Matrix:	Air Media		Extraction Method:	EPA 3540C
Analytical Method:	48,TO-10A		Extraction Date:	10/15/15 13:10
Analytical Date:	10/28/15 14:27			
Analyst:	SA			

Parameter	Result	Qualifier	Units	RL	MDL	Dilution Factor	Column
PCB Aroclors in Air - Mansfield Lab							
Aroclor 1242	1890		ng/cart	80.0	--	4	A

Surrogate	% Recovery	Qualifier	Acceptance Criteria	Column
Tetrachloro-meta-Xylene	89		60-120	A
Decachlorobiphenyl	68		60-120	A
Tetrachloro-meta-Xylene	90		60-120	B
Decachlorobiphenyl	64		60-120	B

Project Name: NBHS
Project Number: 115058

Lab Number: L1525995
Report Date: 10/29/15

SAMPLE RESULTS

Lab ID:	L1525995-02	Date Collected:	10/13/15 12:19
Client ID:	VAPOR OUTLET	Date Received:	10/14/15
Sample Location:	NEW BEDFORD	Field Prep:	Not Specified
Matrix:	Air Media	Extraction Method:	EPA 3540C
Analytical Method:	48,TO-10A	Extraction Date:	10/15/15 13:10
Analytical Date:	10/19/15 22:12		
Analyst:	SA		

Parameter	Result	Qualifier	Units	RL	MDL	Dilution Factor	Column
PCB Aroclors in Air - Mansfield Lab							
Aroclor 1016	ND		ng/cart	30.0	--	1	A
Aroclor 1221	ND		ng/cart	100	--	1	A
Aroclor 1232	ND		ng/cart	30.0	--	1	A
Aroclor 1242	ND		ng/cart	20.0	--	1	A
Aroclor 1248	ND		ng/cart	20.0	--	1	A
Aroclor 1254	ND		ng/cart	20.0	--	1	A
Aroclor 1260	ND		ng/cart	20.0	--	1	A
Aroclor 1262	ND		ng/cart	20.0	--	1	A
Aroclor 1268	ND		ng/cart	20.0	--	1	A

Surrogate	% Recovery	Qualifier	Acceptance Criteria	Column
Tetrachloro-meta-Xylene	**11**	Q	60-120	A
Decachlorobiphenyl	**55**	Q	60-120	A
Tetrachloro-meta-Xylene	**10**	Q	60-120	B
Decachlorobiphenyl	**55**	Q	60-120	B

Project Name: NBHS
Project Number: 115058

Lab Number: L1525995
Report Date: 10/29/15

Method Blank Analysis
Batch Quality Control

Analytical Method: 48,TO-10A
Analytical Date: 10/19/15 16:29
Analyst: SA

Extraction Method: EPA 3540C
Extraction Date: 10/15/15 13:10

Parameter	Result	Qualifier	Units	RL	MDL	Column
PCB Aroclors in Air - Mansfield Lab for sample(s): 01-02 Batch: WG831087-1						
Aroclor 1016	ND		ng/cart	30.0	--	A
Aroclor 1221	ND		ng/cart	100	--	A
Aroclor 1232	ND		ng/cart	30.0	--	A
Aroclor 1242	ND		ng/cart	20.0	--	A
Aroclor 1248	ND		ng/cart	20.0	--	A
Aroclor 1254	ND		ng/cart	20.0	--	A
Aroclor 1260	ND		ng/cart	20.0	--	A
Aroclor 1262	ND		ng/cart	20.0	--	A
Aroclor 1268	ND		ng/cart	20.0	--	A

Surrogate	%Recovery	Qualifier	Acceptance Criteria	Column
Tetrachloro-meta-Xylene	81		60-120	A
Decachlorobiphenyl	78		60-120	A
Tetrachloro-meta-Xylene	84		60-120	B
Decachlorobiphenyl	79		60-120	B

Lab Control Sample Analysis
Batch Quality Control

Project Name: NBHS
Project Number: 115058

Lab Number: L1525995
Report Date: 10/29/15

Parameter	LCS %Recovery	Qual	LCSD %Recovery	Qual	%Recovery Limits	RPD	Qual	RPD Limits	Column
PCB Aroclors in Air - Mansfield Lab Associated sample(s): 01-02 Batch: WG831087-2									
Aroclor 1016	74		-		40-140	-		50	A
Aroclor 1260	81		-		40-140	-		50	A

Surrogate	LCS %Recovery	Qual	LCSD %Recovery	Qual	Acceptance Criteria	Column
Tetrachloro-meta-Xylene	84				60-120	A
Decachlorobiphenyl	83				60-120	A
Tetrachloro-meta-Xylene	88				60-120	B
Decachlorobiphenyl	86				60-120	B

Project Name: NBHS
Project Number: 115058

Lab Number: L1525995
Report Date: 10/29/15

Sample Receipt and Container Information

Were project specific reporting limits specified? YES

Cooler Information	Custody Seal
Cooler	
A	Absent

Container Information

Container ID	Container Type	Cooler	pH	Temp deg C	Pres	Seal	Analysis(*)
L1525995-01A	PUF Air Cartridge - High or Low	A	N/A	3.4	Y	Absent	A2-TO10-AROCLOR(7)
L1525995-02A	PUF Air Cartridge - High or Low	A	N/A	3.4	Y	Absent	A2-TO10-AROCLOR(7)

*Values in parentheses indicate holding time in days

Project Name:	NBHS	**Lab Number:**	L1525995
Project Number:	115058	**Report Date:**	10/29/15

GLOSSARY

Acronyms

EDL	- Estimated Detection Limit: This value represents the level to which target analyte concentrations are reported as estimated values, when those target analyte concentrations are quantified below the reporting limit (RL). The EDL includes any adjustments from dilutions, concentrations or moisture content, where applicable. The use of EDLs is specific to the analysis of PAHs using Solid-Phase Microextraction (SPME).
EPA	- Environmental Protection Agency.
LCS	- Laboratory Control Sample: A sample matrix, free from the analytes of interest, spiked with verified known amounts of analytes or a material containing known and verified amounts of analytes.
LCSD	- Laboratory Control Sample Duplicate: Refer to LCS.
LFB	- Laboratory Fortified Blank: A sample matrix, free from the analytes of interest, spiked with verified known amounts of analytes or a material containing known and verified amounts of analytes.
MDL	- Method Detection Limit: This value represents the level to which target analyte concentrations are reported as estimated values, when those target analyte concentrations are quantified below the reporting limit (RL). The MDL includes any adjustments from dilutions, concentrations or moisture content, where applicable.
MS	- Matrix Spike Sample: A sample prepared by adding a known mass of target analyte to a specified amount of matrix sample for which an independent estimate of target analyte concentration is available.
MSD	- Matrix Spike Sample Duplicate: Refer to MS.
NA	- Not Applicable.
NC	- Not Calculated: Term is utilized when one or more of the results utilized in the calculation are non-detect at the parameter's reporting unit.
NI	- Not Ignitable.
NP	- Non-Plastic: Term is utilized for the analysis of Atterberg Limits in soil.
RL	- Reporting Limit: The value at which an instrument can accurately measure an analyte at a specific concentration. The RL includes any adjustments from dilutions, concentrations or moisture content, where applicable.
RPD	- Relative Percent Difference: The results from matrix and/or matrix spike duplicates are primarily designed to assess the precision of analytical results in a given matrix and are expressed as relative percent difference (RPD). Values which are less than five times the reporting limit for any individual parameter are evaluated by utilizing the absolute difference between the values; although the RPD value will be provided in the report.
SRM	- Standard Reference Material: A reference sample of a known or certified value that is of the same or similar matrix as the associated field samples.
STLP	- Semi-dynamic Tank Leaching Procedure per EPA Method 1315.
TIC	- Tentatively Identified Compound: A compound that has been identified to be present and is not part of the target compound list (TCL) for the method and/or program. All TICs are qualitatively identified and reported as estimated concentrations.

Footnotes

1	- The reference for this analyte should be considered modified since this analyte is absent from the target analyte list of the original method.

Terms

Total: With respect to Organic analyses, a 'Total' result is defined as the summation of results for individual isomers or Aroclors. If a 'Total' result is requested, the results of its individual components will also be reported. This is applicable to 'Total' results for methods 8260, 8081 and 8082.

Analytical Method: Both the document from which the method originates and the analytical reference method. (Example: EPA 8260B is shown as 1,8260B.) The codes for the reference method documents are provided in the References section of the Addendum.

Data Qualifiers

A	- Spectra identified as "Aldol Condensation Product".
B	- The analyte was detected above the reporting limit in the associated method blank. Flag only applies to associated field samples that have detectable concentrations of the analyte at less than ten times (10x) the concentration found in the blank. For MCP-related projects, flag only applies to associated field samples that have detectable concentrations of the analyte at less than ten times (10x) the concentration found in the blank. For DOD-related projects, flag only applies to associated field samples that have detectable concentrations of the analyte at less than ten times (10x) the concentration found in the blank AND the analyte was detected above one-half the reporting limit (or above the reporting limit for common lab contaminants) in the associated method blank. For NJ-Air-related projects, flag only applies to associated field samples that have detectable concentrations of the analyte above the reporting limit. For NJ-related projects (excluding Air), flag only applies to associated field samples that have detectable concentrations of the analyte, which was detected above the reporting limit in the associated method blank or above five times the reporting limit for common lab contaminants (Phthalates, Acetone, Methylene Chloride, 2-Butanone).

Report Format: Data Usability Report

Project Name: NBHS **Lab Number:** L1525995

Project Number: 115058 **Report Date:** 10/29/15

Data Qualifiers

C - Co-elution: The target analyte co-elutes with a known lab standard (i.e. surrogate, internal standards, etc.) for co-extracted analyses.

D - Concentration of analyte was quantified from diluted analysis. Flag only applies to field samples that have detectable concentrations of the analyte.

E - Concentration of analyte exceeds the range of the calibration curve and/or linear range of the instrument.

G - The concentration may be biased high due to matrix interferences (i.e, co-elution) with non-target compound(s). The result should be considered estimated.

H - The analysis of pH was performed beyond the regulatory-required holding time of 15 minutes from the time of sample collection.

I - The lower value for the two columns has been reported due to obvious interference.

M - Reporting Limit (RL) exceeds the MCP CAM Reporting Limit for this analyte.

NJ - Presumptive evidence of compound. This represents an estimated concentration for Tentatively Identified Compounds (TICs), where the identification is based on a mass spectral library search.

P - The RPD between the results for the two columns exceeds the method-specified criteria.

Q - The quality control sample exceeds the associated acceptance criteria. For DOD-related projects, LCS and/or Continuing Calibration Standard exceedences are also qualified on all associated sample results. Note: This flag is not applicable for matrix spike recoveries when the sample concentration is greater than 4x the spike added or for batch duplicate RPD when the sample concentrations are less than 5x the RL. (Metals only.)

R - Analytical results are from sample re-analysis.

RE - Analytical results are from sample re-extraction.

S - Analytical results are from modified screening analysis.

J - Estimated value. This represents an estimated concentration for Tentatively Identified Compounds (TICs).

ND - Not detected at the reporting limit (RL) for the sample.

Report Format: Data Usability Report

Project Name: NBHS
Project Number: 115058
Lab Number: L1525995
Report Date: 10/29/15

REFERENCES

48 Compendium of Methods for the Determination of Toxic Organic Compounds in Ambient Air. Second Edition. EPA/625/R-96/010b, January 1999.

LIMITATION OF LIABILITIES

Alpha Analytical performs services with reasonable care and diligence normal to the analytical testing laboratory industry. In the event of an error, the sole and exclusive responsibility of Alpha Analytical shall be to re-perform the work at it's own expense. In no event shall Alpha Analytical be held liable for any incidental, consequential or special damages, including but not limited to, damages in any way connected with the use of, interpretation of, information or analysis provided by Alpha Analytical.

We strongly urge our clients to comply with EPA protocol regarding sample volume, preservation, cooling, containers, sampling procedures, holding time and splitting of samples in the field.

Certification Information

The following analytes are not included in our Primary NELAP Scope of Accreditation:

Westborough Facility
EPA 8260C: 1,2,4,5-Tetramethylbenzene, 4-Ethyltoluene, Iodomethane (methyl iodide) (soil), Methyl methacrylate (soil), Azobenzene.
EPA 8270D: Dimethylnaphthalene,1,4-Diphenylhydrazine.
EPA 625: 4-Chloroaniline, 4-Methylphenol.
SM4500: Soil: Total Phosphorus, TKN, NO2, NO3.

Mansfield Facility
EPA 8270D: Biphenyl.
EPA 2540D: TSS
EPA TO-15: Halothane, 2,4,4-Trimethyl-2-pentene, 2,4,4-Trimethyl-1-pentene, Thiophene, 2-Methylthiophene, 3-Methylthiophene, 2-Ethylthiophene, 1,2,3-Trimethylbenzene, Indan, Indene, 1,2,4,5-Tetramethylbenzene, Benzothiophene, 1-Methylnaphthalene.

The following analytes are included in our Massachusetts DEP Scope of Accreditation, Westborough Facility:

Drinking Water
EPA 200.8: Sb,As,Ba,Be,Cd,Cr,Cu,Pb,Ni,Se,Tl; **EPA 200.7**: Ba,Be,Ca,Cd,Cr,Cu,Na; **EPA 245.1:** Mercury;
EPA 300.0: Nitrate-N, Fluoride, Sulfate; **EPA 353.2**: Nitrate-N, Nitrite-N; **SM4500NO3-F**: Nitrate-N, Nitrite-N; **SM4500F-C, SM4500CN-CE, EPA 180.1, SM2130B, SM4500Cl-D, SM2320B, SM2540C, SM4500H-B**
EPA 332: Perchlorate.
Microbiology: **SM9215B; SM9223-P/A, SM9223B-Colilert-QT, Enterolert-QT.**

Non-Potable Water
EPA 200.8: Al,Sb,As,Be,Cd,Cr,Cu,Pb,Mn,Ni,Se,Ag,Tl,Zn;
EPA 200.7: Al,Sb,As,Be,Cd,Ca,Cr,Co,Cu,Fe,Pb,Mg,Mn,Mo,Ni,K,Se,Ag,Na,Sr,Ti,Tl,V,Zn;
EPA 245.1, SM4500H,B, EPA 120.1, SM2510B, SM2540C, SM2340B, SM2320B, SM4500CL-E, SM4500F-BC, SM426C, SM4500NH3-BH, **EPA 350.1**: Ammonia-N, **LACHAT 10-107-06-1-B**: Ammonia-N, **SM4500NO3-F,**
EPA 353.2: Nitrate-N**, SM4500NH3-BC-NES, EPA 351.1, SM4500P-E, SM4500P-B, E, SM5220D, EPA 410.4, SM5210B, SM5310C, SM4500CL-D, EPA 1664, SM14 510AC, EPA 420.1, SM4500-CN-CE, SM2540D.**
EPA 624: Volatile Halocarbons & Aromatics,
EPA 608: Chlordane, Toxaphene, Aldrin, alpha-BHC, beta-BHC, gamma-BHC, delta-BHC, Dieldrin, DDD, DDE, DDT, Endosulfan I, Endosulfan II, Endosulfan sulfate, Endrin, Endrin Aldehyde, Heptachlor, Heptachlor Epoxide, PCBs
EPA 625: SVOC (Acid/Base/Neutral Extractables), **EPA 600/4-81-045**: PCB-Oil.
Microbiology: **SM9223B-Colilert-QT; Enterolert-QT, SM9222D-MF**.

For a complete listing of analytes and methods, please contact your Alpha Project Manager.

AIR ANALYSIS

PAGE 1 OF 1

CHAIN OF CUSTODY

ALPHA ANALYTICAL
320 Forbes Blvd, Mansfield, MA 02048
TEL: 508-822-9300 FAX: 508-822-3288

Date Rec'd in Lab: 10/14/15

ALPHA Job #: L1525995

Client Information

Client: TRC
Address: 650 SUFFOLK ST
LOWELL
Phone:
Fax:
Email:
☐ These samples have been previously analyzed by Alpha

Project Information

Project Name: NBHL
Project Location: NEW BEDFORD
Project #:
Project Manager:
ALPHA Quote #:

Turn-Around Time

☑ Standard ☐ RUSH (only confirmed if pre-approved!)

Date Due: Time:

Report Information - Data Deliverables

☐ FAX
☐ ADEx
Criteria Checker:
(Default based on Regulatory Criteria Indicated)
Other Formats:
☐ EMAIL (standard pdf report)
☐ Additional Deliverables:

Report to: (if different than Project Manager)

Billing Information

☐ Same as Client info PO #: 115058

Regulatory Requirements/Report Limits

State/Fed	Program	Criteria

Other Project Specific Requirements/Comments:

All Columns Below Must Be Filled Out

ALPHA Lab ID (Lab Use Only)	Sample ID	Collection Date	Start Time	End Time	Initial ~~Vacuum~~ PSI	~~Final Vacuum~~ Volume	Sample Matrix*	Sampler's Initials	Can Size	I.D. ~~Can~~ PUMP	I.D. - Flow Controller	TO-14A by TO-15	TO-15	TO-15 SIM	APH	FIXED GASES	TO-13A	TO-4 / TO-10	Sample Comments (i.e. PID)
L5995-01	VAPOR INLET	10/13/15	8:07	12:17	5 inHg	1250l	I	JF		N005	—								TO-10 HI ARUCLOR
-02	VAPOR OUTLET	10/13/15	8:09	12:19	"	1250l	E	JF		LP328	—								" " PCBs

*SAMPLE MATRIX CODES
AA = Ambient Air (Indoor/Outdoor)
SV = Soil Vapor/Landfill Gas/SVE
Other = Please Specify

Container Type

Relinquished By:	Date/Time	Received By:	Date/Time:
[signature]	10/14/15 1010	[signature]	10/14/15 0950
[signature]	10/14/15 1010	[signature]	10/14/15 1010

Please print clearly, legibly and completely. Samples can not be logged in and turnaround time clock will not start until any ambiguities are resolved. All samples submitted are subject to Alpha's Terms and Conditions. See reverse side.

Sample Results

Lab ID:	L1525995-01	Sampling Time:	4.17	hrs
		Sampling Rate:	5	L/min
Matrix:	Air Media	Total Flow:	1250	L

PCB Aroclors in Air

	ng/cart				ug/m3				Dilution	
Parameter	**Result**	**Units**	**RL**	**MDL**	**Result**	**Units**	**RL**	**MDL**	**Factor**	**Column**
Aroclor 1016	0	ng/cart	30	-	ND	ug/m3	0.0240	-	1	A
Aroclor 1221	0	ng/cart	100	-	ND	ug/m3	0.0800	-	1	A
Aroclor 1232	0	ng/cart	30	-	ND	ug/m3	0.0240	-	1	A
Aroclor 1242	1890	ng/cart	100	-	1.51	ug/m3	0.0800	-	4	A
Aroclor 1248	0	ng/cart	20	-	ND	ug/m3	0.01600	-	1	A
Aroclor 1254	0	ng/cart	20	-	ND	ug/m3	0.01600	-	1	A
Aroclor 1260	0	ng/cart	20	-	ND	ug/m3	0.01600	-	1	A
Aroclor 1262	0	ng/cart	20	-	ND	ug/m3	0.01600	-	1	A
Aroclor 1268	0	ng/cart	20	-	ND	ug/m3	0.01600	-	1	A

Sample Results

Lab ID:	L1525995-02	Sampling Time:	4.17	hrs
		Sampling Rate:	5	L/min
Matrix:	Air Media	Total Flow:	1250	L

PCB Aroclors in Air

	ng/cart				ug/m3				Dilution	
Parameter	**Result**	**Units**	**RL**	**MDL**	**Result**	**Units**	**RL**	**MDL**	**Factor**	**Column**
Aroclor 1016	0	ng/cart	30	-	ND	ug/m3	0.0240	-	1	A
Aroclor 1221	0	ng/cart	100	-	ND	ug/m3	0.0800	-	1	A
Aroclor 1232	0	ng/cart	30	-	ND	ug/m3	0.0240	-	1	A
Aroclor 1242	0	ng/cart	20	-	ND	ug/m3	0.01600	-	1	A
Aroclor 1248	0	ng/cart	20	-	ND	ug/m3	0.01600	-	1	A
Aroclor 1254	0	ng/cart	20	-	ND	ug/m3	0.01600	-	1	A
Aroclor 1260	0	ng/cart	20	-	ND	ug/m3	0.01600	-	1	A
Aroclor 1262	0	ng/cart	20	-	ND	ug/m3	0.01600	-	1	A
Aroclor 1268	0	ng/cart	20	-	ND	ug/m3	0.01600	-	1	A

GROUNDWATER MONITORING WELL ANALYTICAL DATA

ANALYTICAL REPORT

Lab Number:	L1517568
Client:	TRC Environmental Consultants Wannalancit Mills 650 Suffolk Street Lowell, MA 01854
ATTN:	David Sullivan
Phone:	(978) 656-3565
Project Name:	NBHS IRA
Project Number:	115058
Report Date:	08/04/15

The original project report/data package is held by Alpha Analytical. This report/data package is paginated and should be reproduced only in its entirety. Alpha Analytical holds no responsibility for results and/or data that are not consistent with the original.

Certifications & Approvals: NY (11627), CT (PH-0141), NH (2206), NJ NELAP (MA015), RI (LAO00299), ME (MA00030), PA (68-02089), VA (460194), LA NELAP (03090), FL (E87814), TX (T104704419), WA (C954), USFWS (Permit #LE2069641), USDA (Permit #P330-11-00109), US Army Corps of Engineers.

Eight Walkup Drive, Westborough, MA 01581-1019
508-898-9220 (Fax) 508-898-9193 800-624-9220 - www.alphalab.com

Project Name: NBHS IRA
Project Number: 115058

Lab Number: L1517568
Report Date: 08/04/15

Alpha Sample ID	Client ID	Matrix	Sample Location	Collection Date/Time	Receive Date
L1517568-01	MW-42R	WATER	NEW BEDFORD, MA	07/27/15 11:30	07/28/15
L1517568-02	MW-42R-FILTERED	WATER	NEW BEDFORD, MA	07/27/15 11:30	07/28/15
L1517568-03	MW-27R	WATER	NEW BEDFORD, MA	07/27/15 12:30	07/28/15
L1517568-04	MW-27R-FILTERED	WATER	NEW BEDFORD, MA	07/27/15 12:30	07/28/15
L1517568-05	MW-32	WATER	NEW BEDFORD, MA	07/27/15 12:55	07/28/15
L1517568-06	MW-28	WATER	NEW BEDFORD, MA	07/27/15 13:00	07/28/15
L1517568-07	MW-28-FILTERED	WATER	NEW BEDFORD, MA	07/27/15 13:00	07/28/15
L1517568-08	MW-41	WATER	NEW BEDFORD, MA	07/27/15 16:30	07/28/15
L1517568-09	MW-41-FILTERED	WATER	NEW BEDFORD, MA	07/27/15 16:30	07/28/15
L1517568-10	DUP	WATER	NEW BEDFORD, MA	07/27/15 00:00	07/28/15
L1517568-11	DUP-FILTERED	WATER	NEW BEDFORD, MA	07/27/15 00:00	07/28/15
L1517568-12	TRIP BLANK	WATER	NEW BEDFORD, MA	07/27/15 00:00	07/28/15

Project Name: NBHS IRA **Lab Number:** L1517568

Project Number: 115058 **Report Date:** 08/04/15

MADEP MCP Response Action Analytical Report Certification

This form provides certifications for all samples performed by MCP methods. Please refer to the Sample Results and Container Information sections of this report for specification of MCP methods used for each analysis. The following questions pertain only to MCP Analytical Methods.

An affirmative response to questions A through F is required for "Presumptive Certainty" status		
A	Were all samples received in a condition consistent with those described on the Chain-of-Custody, properly preserved (including temperature) in the field or laboratory, and prepared/analyzed within method holding times?	YES
B	Were the analytical method(s) and all associated QC requirements specified in the selected CAM protocol(s) followed?	YES
C	Were all required corrective actions and analytical response actions specified in the selected CAM protocol(s) implemented for all identified performance standard non-conformances?	YES
D	Does the laboratory report comply with all the reporting requirements specified in CAM VII A, "Quality Assurance and Quality Control Guidelines for the Acquisition and Reporting of Analytical Data?"	YES
E a.	VPH, EPH, and APH Methods only: Was each method conducted without significant modification(s)? (Refer to the individual method(s) for a list of significant modifications).	N/A
E b.	APH and TO-15 Methods only: Was the complete analyte list reported for each method?	N/A
F	Were all applicable CAM protocol QC and performance standard non-conformances identified and evaluated in a laboratory narrative (including all "No" responses to Questions A through E)?	YES

A response to questions G, H and I is required for "Presumptive Certainty" status		
G	Were the reporting limits at or below all CAM reporting limits specified in the selected CAM protocol(s)?	YES
H	Were all QC performance standards specified in the CAM protocol(s) achieved?	NO
I	Were results reported for the complete analyte list specified in the selected CAM protocol(s)?	YES

For any questions answered "No", please refer to the case narrative section on the following page(s).

Please note that sample matrix information is located in the Sample Results section of this report.

Project Name: NBHS IRA
Project Number: 115058

Lab Number: L1517568
Report Date: 08/04/15

Case Narrative

The samples were received in accordance with the Chain of Custody and no significant deviations were encountered during the preparation or analysis unless otherwise noted. Sample Receipt, Container Information, and the Chain of Custody are located at the back of the report.

Results contained within this report relate only to the samples submitted under this Alpha Lab Number and meet all of the requirements of NELAC, for all NELAC accredited parameters. The data presented in this report is organized by parameter (i.e. VOC, SVOC, etc.). Sample specific Quality Control data (i.e. Surrogate Spike Recovery) is reported at the end of the target analyte list for each individual sample, followed by the Laboratory Batch Quality Control at the end of each parameter. Tentatively Identified Compounds (TICs), if requested, are reported for compounds identified to be present and are not part of the method/program Target Compound List, even if only a subset of the TCL are being reported. If a sample was re-analyzed or re-extracted due to a required quality control corrective action and if both sets of data are reported, the Laboratory ID of the re-analysis or re-extraction is designated with an "R" or "RE", respectively. When multiple Batch Quality Control elements are reported (e.g. more than one LCS), the associated samples for each element are noted in the grey shaded header line of each data table. Any Laboratory Batch, Sample Specific % recovery or RPD value that is outside the listed Acceptance Criteria is bolded in the report. All specific QC information is also incorporated in the Data Usability format of our Data Merger tool where it can be reviewed along with any associated usability implications. Soil/sediments, solids and tissues are reported on a dry weight basis unless otherwise noted. Definitions of all data qualifiers and acronyms used in this report are provided in the Glossary located at the back of the report.

In reference to questions H (CAM) or 4 (RCP) when "NO" is checked, the performance criteria for CAM and RCP methods allow for some quality control failures to occur and still be within method compliance. In these instances the specific failure is not narrated but noted in the associated QC table. The information is also incorporated in the Data Usability format of our Data Merger tool where it can be reviewed along with any associated usability implications.

Please see the associated ADEx data file for a comparison of laboratory reporting limits that were achieved with the regulatory Numerical Standards requested on the Chain of Custody.

HOLD POLICY
For samples submitted on hold, Alpha's policy is to hold samples (with the exception of Air canisters) free of charge for 21 calendar days from the date the project is completed. After 21 calendar days, we will dispose of all samples submitted including those put on hold unless you have contacted your Client Service Representative and made arrangements for Alpha to continue to hold the samples. Air canisters will be disposed after 3 business days from the date the project is completed.

Please contact Client Services at 800-624-9220 with any questions.

Project Name: NBHS IRA
Project Number: 115058

Lab Number: L1517568
Report Date: 08/04/15

Case Narrative (continued)

MCP Related Narratives

Volatile Organics

In reference to question H:

The initial calibration, associated with L1517568-01,-03,-05,-06,-08,-10, and -12, did not meet the method required minimum response factor on the lowest calibration standard for acetone (0.08622), 2-butanone (0.08198), 4-methyl-2-pentanone (0.05918), and 1,4-dioxane (0.00151), as well as the average response factor for acetone, 2-butanone, 4-methyl-2-pentanone, and 1,4-dioxane.

The continuing calibration standard, associated with L1517568-01,-03,-05,-06,-08,-10, and -12, is outside the acceptance criteria for several compounds; however, it is within overall method allowances. A copy of the continuing calibration standard is included as an addendum to this report.

I, the undersigned, attest under the pains and penalties of perjury that, to the best of my knowledge and belief and based upon my personal inquiry of those responsible for providing the information contained in this analytical report, such information is accurate and complete. This certificate of analysis is not complete unless this page accompanies any and all pages of this report.

Authorized Signature: Lisa Westerlind

Title: Technical Director/Representative

Date: 08/04/15

ORGANICS

VOLATILES

Project Name: NBHS IRA
Project Number: 115058
Lab Number: L1517568
Report Date: 08/04/15

SAMPLE RESULTS

Lab ID: L1517568-01
Client ID: MW-42R
Sample Location: NEW BEDFORD, MA
Matrix: Water
Analytical Method: 97,8260C
Analytical Date: 08/01/15 08:06
Analyst: MM

Date Collected: 07/27/15 11:30
Date Received: 07/28/15
Field Prep: Not Specified

Parameter	Result	Qualifier	Units	RL	MDL	Dilution Factor
MCP Volatile Organics - Westborough Lab						
Methylene chloride	ND		ug/l	2.0	--	1
1,1-Dichloroethane	ND		ug/l	1.0	--	1
Chloroform	ND		ug/l	1.0	--	1
Carbon tetrachloride	ND		ug/l	1.0	--	1
1,2-Dichloropropane	ND		ug/l	1.0	--	1
Dibromochloromethane	ND		ug/l	1.0	--	1
1,1,2-Trichloroethane	ND		ug/l	1.0	--	1
Tetrachloroethene	ND		ug/l	1.0	--	1
Chlorobenzene	ND		ug/l	1.0	--	1
Trichlorofluoromethane	ND		ug/l	2.0	--	1
1,2-Dichloroethane	ND		ug/l	1.0	--	1
1,1,1-Trichloroethane	ND		ug/l	1.0	--	1
Bromodichloromethane	ND		ug/l	1.0	--	1
trans-1,3-Dichloropropene	ND		ug/l	0.50	--	1
cis-1,3-Dichloropropene	ND		ug/l	0.50	--	1
1,3-Dichloropropene, Total	ND		ug/l	0.50	--	1
1,1-Dichloropropene	ND		ug/l	2.0	--	1
Bromoform	ND		ug/l	2.0	--	1
1,1,2,2-Tetrachloroethane	ND		ug/l	1.0	--	1
Benzene	ND		ug/l	0.50	--	1
Toluene	ND		ug/l	1.0	--	1
Ethylbenzene	ND		ug/l	1.0	--	1
Chloromethane	ND		ug/l	2.0	--	1
Bromomethane	ND		ug/l	2.0	--	1
Vinyl chloride	4.4		ug/l	1.0	--	1
Chloroethane	ND		ug/l	2.0	--	1
1,1-Dichloroethene	ND		ug/l	1.0	--	1
trans-1,2-Dichloroethene	2.5		ug/l	1.0	--	1
Trichloroethene	2.9		ug/l	1.0	--	1
1,2-Dichlorobenzene	ND		ug/l	1.0	--	1

Project Name: NBHS IRA **Lab Number:** L1517568

Project Number: 115058 **Report Date:** 08/04/15

SAMPLE RESULTS

Lab ID: L1517568-01 Date Collected: 07/27/15 11:30

Client ID: MW-42R Date Received: 07/28/15

Sample Location: NEW BEDFORD, MA Field Prep: Not Specified

Parameter	Result	Qualifier	Units	RL	MDL	Dilution Factor
MCP Volatile Organics - Westborough Lab						
1,3-Dichlorobenzene	ND		ug/l	1.0	--	1
1,4-Dichlorobenzene	ND		ug/l	1.0	--	1
Methyl tert butyl ether	ND		ug/l	2.0	--	1
p/m-Xylene	ND		ug/l	2.0	--	1
o-Xylene	ND		ug/l	1.0	--	1
Xylene (Total)	ND		ug/l	1.0	--	1
cis-1,2-Dichloroethene	4.0		ug/l	1.0	--	1
1,2-Dichloroethene (total)	6.5		ug/l	1.0	--	1
Dibromomethane	ND		ug/l	2.0	--	1
1,2,3-Trichloropropane	ND		ug/l	2.0	--	1
Styrene	ND		ug/l	1.0	--	1
Dichlorodifluoromethane	ND		ug/l	2.0	--	1
Acetone	ND		ug/l	5.0	--	1
Carbon disulfide	ND		ug/l	2.0	--	1
2-Butanone	ND		ug/l	5.0	--	1
4-Methyl-2-pentanone	ND		ug/l	5.0	--	1
2-Hexanone	ND		ug/l	5.0	--	1
Bromochloromethane	ND		ug/l	2.0	--	1
Tetrahydrofuran	ND		ug/l	2.0	--	1
2,2-Dichloropropane	ND		ug/l	2.0	--	1
1,2-Dibromoethane	ND		ug/l	2.0	--	1
1,3-Dichloropropane	ND		ug/l	2.0	--	1
1,1,1,2-Tetrachloroethane	ND		ug/l	1.0	--	1
Bromobenzene	ND		ug/l	2.0	--	1
n-Butylbenzene	ND		ug/l	2.0	--	1
sec-Butylbenzene	ND		ug/l	2.0	--	1
tert-Butylbenzene	ND		ug/l	2.0	--	1
o-Chlorotoluene	ND		ug/l	2.0	--	1
p-Chlorotoluene	ND		ug/l	2.0	--	1
1,2-Dibromo-3-chloropropane	ND		ug/l	2.0	--	1
Hexachlorobutadiene	ND		ug/l	0.60	--	1
Isopropylbenzene	ND		ug/l	2.0	--	1
p-Isopropyltoluene	ND		ug/l	2.0	--	1
Naphthalene	ND		ug/l	2.0	--	1
n-Propylbenzene	ND		ug/l	2.0	--	1
1,2,3-Trichlorobenzene	ND		ug/l	2.0	--	1
1,2,4-Trichlorobenzene	ND		ug/l	2.0	--	1
1,3,5-Trimethylbenzene	ND		ug/l	2.0	--	1
1,2,4-Trimethylbenzene	ND		ug/l	2.0	--	1

Project Name: NBHS IRA
Project Number: 115058
Lab Number: L1517568
Report Date: 08/04/15

SAMPLE RESULTS

Lab ID: L1517568-01
Client ID: MW-42R
Sample Location: NEW BEDFORD, MA
Date Collected: 07/27/15 11:30
Date Received: 07/28/15
Field Prep: Not Specified

Parameter	Result	Qualifier	Units	RL	MDL	Dilution Factor
MCP Volatile Organics - Westborough Lab						
Ethyl ether	ND		ug/l	2.0	--	1
Isopropyl Ether	ND		ug/l	2.0	--	1
Ethyl-Tert-Butyl-Ether	ND		ug/l	2.0	--	1
Tertiary-Amyl Methyl Ether	ND		ug/l	2.0	--	1
1,4-Dioxane	ND		ug/l	250	--	1

Surrogate	% Recovery	Qualifier	Acceptance Criteria
1,2-Dichloroethane-d4	114		70-130
Toluene-d8	102		70-130
4-Bromofluorobenzene	99		70-130
Dibromofluoromethane	98		70-130

Project Name: NBHS IRA
Project Number: 115058
Lab Number: L1517568
Report Date: 08/04/15

SAMPLE RESULTS

Lab ID: L1517568-03
Client ID: MW-27R
Sample Location: NEW BEDFORD, MA
Matrix: Water
Analytical Method: 97,8260C
Analytical Date: 08/01/15 08:37
Analyst: MM

Date Collected: 07/27/15 12:30
Date Received: 07/28/15
Field Prep: Not Specified

Parameter	Result	Qualifier	Units	RL	MDL	Dilution Factor
MCP Volatile Organics - Westborough Lab						
Methylene chloride	ND		ug/l	2.0	--	1
1,1-Dichloroethane	ND		ug/l	1.0	--	1
Chloroform	ND		ug/l	1.0	--	1
Carbon tetrachloride	ND		ug/l	1.0	--	1
1,2-Dichloropropane	ND		ug/l	1.0	--	1
Dibromochloromethane	ND		ug/l	1.0	--	1
1,1,2-Trichloroethane	ND		ug/l	1.0	--	1
Tetrachloroethene	ND		ug/l	1.0	--	1
Chlorobenzene	ND		ug/l	1.0	--	1
Trichlorofluoromethane	ND		ug/l	2.0	--	1
1,2-Dichloroethane	ND		ug/l	1.0	--	1
1,1,1-Trichloroethane	ND		ug/l	1.0	--	1
Bromodichloromethane	ND		ug/l	1.0	--	1
trans-1,3-Dichloropropene	ND		ug/l	0.50	--	1
cis-1,3-Dichloropropene	ND		ug/l	0.50	--	1
1,3-Dichloropropene, Total	ND		ug/l	0.50	--	1
1,1-Dichloropropene	ND		ug/l	2.0	--	1
Bromoform	ND		ug/l	2.0	--	1
1,1,2,2-Tetrachloroethane	ND		ug/l	1.0	--	1
Benzene	ND		ug/l	0.50	--	1
Toluene	ND		ug/l	1.0	--	1
Ethylbenzene	ND		ug/l	1.0	--	1
Chloromethane	ND		ug/l	2.0	--	1
Bromomethane	ND		ug/l	2.0	--	1
Vinyl chloride	2.6		ug/l	1.0	--	1
Chloroethane	ND		ug/l	2.0	--	1
1,1-Dichloroethene	ND		ug/l	1.0	--	1
trans-1,2-Dichloroethene	1.9		ug/l	1.0	--	1
Trichloroethene	5.8		ug/l	1.0	--	1
1,2-Dichlorobenzene	ND		ug/l	1.0	--	1

Project Name: NBHS IRA **Lab Number:** L1517568

Project Number: 115058 **Report Date:** 08/04/15

SAMPLE RESULTS

Lab ID: L1517568-03 Date Collected: 07/27/15 12:30

Client ID: MW-27R Date Received: 07/28/15

Sample Location: NEW BEDFORD, MA Field Prep: Not Specified

Parameter	Result	Qualifier	Units	RL	MDL	Dilution Factor
MCP Volatile Organics - Westborough Lab						
1,3-Dichlorobenzene	ND		ug/l	1.0	--	1
1,4-Dichlorobenzene	ND		ug/l	1.0	--	1
Methyl tert butyl ether	ND		ug/l	2.0	--	1
p/m-Xylene	ND		ug/l	2.0	--	1
o-Xylene	ND		ug/l	1.0	--	1
Xylene (Total)	ND		ug/l	1.0	--	1
cis-1,2-Dichloroethene	6.1		ug/l	1.0	--	1
1,2-Dichloroethene (total)	8.0		ug/l	1.0	--	1
Dibromomethane	ND		ug/l	2.0	--	1
1,2,3-Trichloropropane	ND		ug/l	2.0	--	1
Styrene	ND		ug/l	1.0	--	1
Dichlorodifluoromethane	ND		ug/l	2.0	--	1
Acetone	ND		ug/l	5.0	--	1
Carbon disulfide	ND		ug/l	2.0	--	1
2-Butanone	ND		ug/l	5.0	--	1
4-Methyl-2-pentanone	ND		ug/l	5.0	--	1
2-Hexanone	ND		ug/l	5.0	--	1
Bromochloromethane	ND		ug/l	2.0	--	1
Tetrahydrofuran	ND		ug/l	2.0	--	1
2,2-Dichloropropane	ND		ug/l	2.0	--	1
1,2-Dibromoethane	ND		ug/l	2.0	--	1
1,3-Dichloropropane	ND		ug/l	2.0	--	1
1,1,1,2-Tetrachloroethane	ND		ug/l	1.0	--	1
Bromobenzene	ND		ug/l	2.0	--	1
n-Butylbenzene	ND		ug/l	2.0	--	1
sec-Butylbenzene	ND		ug/l	2.0	--	1
tert-Butylbenzene	ND		ug/l	2.0	--	1
o-Chlorotoluene	ND		ug/l	2.0	--	1
p-Chlorotoluene	ND		ug/l	2.0	--	1
1,2-Dibromo-3-chloropropane	ND		ug/l	2.0	--	1
Hexachlorobutadiene	ND		ug/l	0.60	--	1
Isopropylbenzene	ND		ug/l	2.0	--	1
p-Isopropyltoluene	ND		ug/l	2.0	--	1
Naphthalene	ND		ug/l	2.0	--	1
n-Propylbenzene	ND		ug/l	2.0	--	1
1,2,3-Trichlorobenzene	ND		ug/l	2.0	--	1
1,2,4-Trichlorobenzene	ND		ug/l	2.0	--	1
1,3,5-Trimethylbenzene	ND		ug/l	2.0	--	1
1,2,4-Trimethylbenzene	ND		ug/l	2.0	--	1

Project Name: NBHS IRA **Lab Number:** L1517568

Project Number: 115058 **Report Date:** 08/04/15

SAMPLE RESULTS

Lab ID: L1517568-03 Date Collected: 07/27/15 12:30

Client ID: MW-27R Date Received: 07/28/15

Sample Location: NEW BEDFORD, MA Field Prep: Not Specified

Parameter	Result	Qualifier	Units	RL	MDL	Dilution Factor
MCP Volatile Organics - Westborough Lab						
Ethyl ether	ND		ug/l	2.0	--	1
Isopropyl Ether	ND		ug/l	2.0	--	1
Ethyl-Tert-Butyl-Ether	ND		ug/l	2.0	--	1
Tertiary-Amyl Methyl Ether	ND		ug/l	2.0	--	1
1,4-Dioxane	ND		ug/l	250	--	1

Surrogate	% Recovery	Qualifier	Acceptance Criteria
1,2-Dichloroethane-d4	112		70-130
Toluene-d8	103		70-130
4-Bromofluorobenzene	98		70-130
Dibromofluoromethane	98		70-130

Project Name: NBHS IRA
Project Number: 115058

Lab Number: L1517568
Report Date: 08/04/15

SAMPLE RESULTS

Lab ID: L1517568-05
Client ID: MW-32
Sample Location: NEW BEDFORD, MA
Matrix: Water
Analytical Method: 97,8260C
Analytical Date: 08/01/15 09:09
Analyst: MM

Date Collected: 07/27/15 12:55
Date Received: 07/28/15
Field Prep: Not Specified

Parameter	Result	Qualifier	Units	RL	MDL	Dilution Factor
MCP Volatile Organics - Westborough Lab						
Methylene chloride	ND		ug/l	2.0	--	1
1,1-Dichloroethane	ND		ug/l	1.0	--	1
Chloroform	ND		ug/l	1.0	--	1
Carbon tetrachloride	ND		ug/l	1.0	--	1
1,2-Dichloropropane	ND		ug/l	1.0	--	1
Dibromochloromethane	ND		ug/l	1.0	--	1
1,1,2-Trichloroethane	ND		ug/l	1.0	--	1
Tetrachloroethene	ND		ug/l	1.0	--	1
Chlorobenzene	ND		ug/l	1.0	--	1
Trichlorofluoromethane	ND		ug/l	2.0	--	1
1,2-Dichloroethane	ND		ug/l	1.0	--	1
1,1,1-Trichloroethane	ND		ug/l	1.0	--	1
Bromodichloromethane	ND		ug/l	1.0	--	1
trans-1,3-Dichloropropene	ND		ug/l	0.50	--	1
cis-1,3-Dichloropropene	ND		ug/l	0.50	--	1
1,3-Dichloropropene, Total	ND		ug/l	0.50	--	1
1,1-Dichloropropene	ND		ug/l	2.0	--	1
Bromoform	ND		ug/l	2.0	--	1
1,1,2,2-Tetrachloroethane	ND		ug/l	1.0	--	1
Benzene	ND		ug/l	0.50	--	1
Toluene	ND		ug/l	1.0	--	1
Ethylbenzene	ND		ug/l	1.0	--	1
Chloromethane	ND		ug/l	2.0	--	1
Bromomethane	ND		ug/l	2.0	--	1
Vinyl chloride	ND		ug/l	1.0	--	1
Chloroethane	ND		ug/l	2.0	--	1
1,1-Dichloroethene	ND		ug/l	1.0	--	1
trans-1,2-Dichloroethene	ND		ug/l	1.0	--	1
Trichloroethene	2.6		ug/l	1.0	--	1
1,2-Dichlorobenzene	ND		ug/l	1.0	--	1

Project Name: NBHS IRA **Lab Number:** L1517568

Project Number: 115058 **Report Date:** 08/04/15

SAMPLE RESULTS

Lab ID: L1517568-05 Date Collected: 07/27/15 12:55

Client ID: MW-32 Date Received: 07/28/15

Sample Location: NEW BEDFORD, MA Field Prep: Not Specified

Parameter	Result	Qualifier	Units	RL	MDL	Dilution Factor
MCP Volatile Organics - Westborough Lab						
1,3-Dichlorobenzene	ND		ug/l	1.0	--	1
1,4-Dichlorobenzene	ND		ug/l	1.0	--	1
Methyl tert butyl ether	ND		ug/l	2.0	--	1
p/m-Xylene	ND		ug/l	2.0	--	1
o-Xylene	ND		ug/l	1.0	--	1
Xylene (Total)	ND		ug/l	1.0	--	1
cis-1,2-Dichloroethene	1.5		ug/l	1.0	--	1
1,2-Dichloroethene (total)	1.5		ug/l	1.0	--	1
Dibromomethane	ND		ug/l	2.0	--	1
1,2,3-Trichloropropane	ND		ug/l	2.0	--	1
Styrene	ND		ug/l	1.0	--	1
Dichlorodifluoromethane	ND		ug/l	2.0	--	1
Acetone	ND		ug/l	5.0	--	1
Carbon disulfide	ND		ug/l	2.0	--	1
2-Butanone	ND		ug/l	5.0	--	1
4-Methyl-2-pentanone	ND		ug/l	5.0	--	1
2-Hexanone	ND		ug/l	5.0	--	1
Bromochloromethane	ND		ug/l	2.0	--	1
Tetrahydrofuran	ND		ug/l	2.0	--	1
2,2-Dichloropropane	ND		ug/l	2.0	--	1
1,2-Dibromoethane	ND		ug/l	2.0	--	1
1,3-Dichloropropane	ND		ug/l	2.0	--	1
1,1,1,2-Tetrachloroethane	ND		ug/l	1.0	--	1
Bromobenzene	ND		ug/l	2.0	--	1
n-Butylbenzene	ND		ug/l	2.0	--	1
sec-Butylbenzene	ND		ug/l	2.0	--	1
tert-Butylbenzene	ND		ug/l	2.0	--	1
o-Chlorotoluene	ND		ug/l	2.0	--	1
p-Chlorotoluene	ND		ug/l	2.0	--	1
1,2-Dibromo-3-chloropropane	ND		ug/l	2.0	--	1
Hexachlorobutadiene	ND		ug/l	0.60	--	1
Isopropylbenzene	ND		ug/l	2.0	--	1
p-Isopropyltoluene	ND		ug/l	2.0	--	1
Naphthalene	ND		ug/l	2.0	--	1
n-Propylbenzene	ND		ug/l	2.0	--	1
1,2,3-Trichlorobenzene	ND		ug/l	2.0	--	1
1,2,4-Trichlorobenzene	ND		ug/l	2.0	--	1
1,3,5-Trimethylbenzene	ND		ug/l	2.0	--	1
1,2,4-Trimethylbenzene	ND		ug/l	2.0	--	1

Project Name: NBHS IRA
Project Number: 115058
Lab Number: L1517568
Report Date: 08/04/15

SAMPLE RESULTS

Lab ID: L1517568-05
Client ID: MW-32
Sample Location: NEW BEDFORD, MA
Date Collected: 07/27/15 12:55
Date Received: 07/28/15
Field Prep: Not Specified

Parameter	Result	Qualifier	Units	RL	MDL	Dilution Factor
MCP Volatile Organics - Westborough Lab						
Ethyl ether	ND		ug/l	2.0	--	1
Isopropyl Ether	ND		ug/l	2.0	--	1
Ethyl-Tert-Butyl-Ether	ND		ug/l	2.0	--	1
Tertiary-Amyl Methyl Ether	ND		ug/l	2.0	--	1
1,4-Dioxane	ND		ug/l	250	--	1

Surrogate	% Recovery	Qualifier	Acceptance Criteria
1,2-Dichloroethane-d4	114		70-130
Toluene-d8	103		70-130
4-Bromofluorobenzene	101		70-130
Dibromofluoromethane	100		70-130

Project Name: NBHS IRA
Project Number: 115058
Lab Number: L1517568
Report Date: 08/04/15

SAMPLE RESULTS

Lab ID: L1517568-06
Client ID: MW-28
Sample Location: NEW BEDFORD, MA
Matrix: Water
Analytical Method: 97,8260C
Analytical Date: 08/01/15 09:41
Analyst: MM

Date Collected: 07/27/15 13:00
Date Received: 07/28/15
Field Prep: Not Specified

Parameter	Result	Qualifier	Units	RL	MDL	Dilution Factor
MCP Volatile Organics - Westborough Lab						
Methylene chloride	ND		ug/l	2.0	--	1
1,1-Dichloroethane	ND		ug/l	1.0	--	1
Chloroform	ND		ug/l	1.0	--	1
Carbon tetrachloride	ND		ug/l	1.0	--	1
1,2-Dichloropropane	ND		ug/l	1.0	--	1
Dibromochloromethane	ND		ug/l	1.0	--	1
1,1,2-Trichloroethane	ND		ug/l	1.0	--	1
Tetrachloroethene	ND		ug/l	1.0	--	1
Chlorobenzene	5.2		ug/l	1.0	--	1
Trichlorofluoromethane	ND		ug/l	2.0	--	1
1,2-Dichloroethane	ND		ug/l	1.0	--	1
1,1,1-Trichloroethane	ND		ug/l	1.0	--	1
Bromodichloromethane	ND		ug/l	1.0	--	1
trans-1,3-Dichloropropene	ND		ug/l	0.50	--	1
cis-1,3-Dichloropropene	ND		ug/l	0.50	--	1
1,3-Dichloropropene, Total	ND		ug/l	0.50	--	1
1,1-Dichloropropene	ND		ug/l	2.0	--	1
Bromoform	ND		ug/l	2.0	--	1
1,1,2,2-Tetrachloroethane	ND		ug/l	1.0	--	1
Benzene	ND		ug/l	0.50	--	1
Toluene	ND		ug/l	1.0	--	1
Ethylbenzene	ND		ug/l	1.0	--	1
Chloromethane	ND		ug/l	2.0	--	1
Bromomethane	ND		ug/l	2.0	--	1
Vinyl chloride	17		ug/l	1.0	--	1
Chloroethane	ND		ug/l	2.0	--	1
1,1-Dichloroethene	ND		ug/l	1.0	--	1
trans-1,2-Dichloroethene	2.8		ug/l	1.0	--	1
Trichloroethene	3.5		ug/l	1.0	--	1
1,2-Dichlorobenzene	ND		ug/l	1.0	--	1

Project Name: NBHS IRA **Lab Number:** L1517568

Project Number: 115058 **Report Date:** 08/04/15

SAMPLE RESULTS

Lab ID: L1517568-06 Date Collected: 07/27/15 13:00

Client ID: MW-28 Date Received: 07/28/15

Sample Location: NEW BEDFORD, MA Field Prep: Not Specified

Parameter	Result	Qualifier	Units	RL	MDL	Dilution Factor
MCP Volatile Organics - Westborough Lab						
1,3-Dichlorobenzene	1.2		ug/l	1.0	--	1
1,4-Dichlorobenzene	6.7		ug/l	1.0	--	1
Methyl tert butyl ether	ND		ug/l	2.0	--	1
p/m-Xylene	ND		ug/l	2.0	--	1
o-Xylene	ND		ug/l	1.0	--	1
Xylene (Total)	ND		ug/l	1.0	--	1
cis-1,2-Dichloroethene	11		ug/l	1.0	--	1
1,2-Dichloroethene (total)	14		ug/l	1.0	--	1
Dibromomethane	ND		ug/l	2.0	--	1
1,2,3-Trichloropropane	ND		ug/l	2.0	--	1
Styrene	ND		ug/l	1.0	--	1
Dichlorodifluoromethane	ND		ug/l	2.0	--	1
Acetone	ND		ug/l	5.0	--	1
Carbon disulfide	ND		ug/l	2.0	--	1
2-Butanone	ND		ug/l	5.0	--	1
4-Methyl-2-pentanone	ND		ug/l	5.0	--	1
2-Hexanone	ND		ug/l	5.0	--	1
Bromochloromethane	ND		ug/l	2.0	--	1
Tetrahydrofuran	ND		ug/l	2.0	--	1
2,2-Dichloropropane	ND		ug/l	2.0	--	1
1,2-Dibromoethane	ND		ug/l	2.0	--	1
1,3-Dichloropropane	ND		ug/l	2.0	--	1
1,1,1,2-Tetrachloroethane	ND		ug/l	1.0	--	1
Bromobenzene	ND		ug/l	2.0	--	1
n-Butylbenzene	ND		ug/l	2.0	--	1
sec-Butylbenzene	ND		ug/l	2.0	--	1
tert-Butylbenzene	ND		ug/l	2.0	--	1
o-Chlorotoluene	ND		ug/l	2.0	--	1
p-Chlorotoluene	ND		ug/l	2.0	--	1
1,2-Dibromo-3-chloropropane	ND		ug/l	2.0	--	1
Hexachlorobutadiene	ND		ug/l	0.60	--	1
Isopropylbenzene	ND		ug/l	2.0	--	1
p-Isopropyltoluene	ND		ug/l	2.0	--	1
Naphthalene	ND		ug/l	2.0	--	1
n-Propylbenzene	ND		ug/l	2.0	--	1
1,2,3-Trichlorobenzene	ND		ug/l	2.0	--	1
1,2,4-Trichlorobenzene	ND		ug/l	2.0	--	1
1,3,5-Trimethylbenzene	ND		ug/l	2.0	--	1
1,2,4-Trimethylbenzene	ND		ug/l	2.0	--	1

Project Name: NBHS IRA **Lab Number:** L1517568

Project Number: 115058 **Report Date:** 08/04/15

SAMPLE RESULTS

Lab ID: L1517568-06 Date Collected: 07/27/15 13:00

Client ID: MW-28 Date Received: 07/28/15

Sample Location: NEW BEDFORD, MA Field Prep: Not Specified

Parameter	Result	Qualifier	Units	RL	MDL	Dilution Factor
MCP Volatile Organics - Westborough Lab						
Ethyl ether	ND		ug/l	2.0	--	1
Isopropyl Ether	ND		ug/l	2.0	--	1
Ethyl-Tert-Butyl-Ether	ND		ug/l	2.0	--	1
Tertiary-Amyl Methyl Ether	ND		ug/l	2.0	--	1
1,4-Dioxane	ND		ug/l	250	--	1

Surrogate	% Recovery	Qualifier	Acceptance Criteria
1,2-Dichloroethane-d4	114		70-130
Toluene-d8	101		70-130
4-Bromofluorobenzene	94		70-130
Dibromofluoromethane	100		70-130

Project Name: NBHS IRA
Project Number: 115058
Lab Number: L1517568
Report Date: 08/04/15

SAMPLE RESULTS

Lab ID: L1517568-08
Client ID: MW-41
Sample Location: NEW BEDFORD, MA
Matrix: Water
Analytical Method: 97,8260C
Analytical Date: 08/01/15 10:13
Analyst: MM

Date Collected: 07/27/15 16:30
Date Received: 07/28/15
Field Prep: Not Specified

Parameter	Result	Qualifier	Units	RL	MDL	Dilution Factor
MCP Volatile Organics - Westborough Lab						
Methylene chloride	ND		ug/l	2.0	--	1
1,1-Dichloroethane	ND		ug/l	1.0	--	1
Chloroform	ND		ug/l	1.0	--	1
Carbon tetrachloride	ND		ug/l	1.0	--	1
1,2-Dichloropropane	ND		ug/l	1.0	--	1
Dibromochloromethane	ND		ug/l	1.0	--	1
1,1,2-Trichloroethane	ND		ug/l	1.0	--	1
Tetrachloroethene	ND		ug/l	1.0	--	1
Chlorobenzene	ND		ug/l	1.0	--	1
Trichlorofluoromethane	ND		ug/l	2.0	--	1
1,2-Dichloroethane	ND		ug/l	1.0	--	1
1,1,1-Trichloroethane	ND		ug/l	1.0	--	1
Bromodichloromethane	ND		ug/l	1.0	--	1
trans-1,3-Dichloropropene	ND		ug/l	0.50	--	1
cis-1,3-Dichloropropene	ND		ug/l	0.50	--	1
1,3-Dichloropropene, Total	ND		ug/l	0.50	--	1
1,1-Dichloropropene	ND		ug/l	2.0	--	1
Bromoform	ND		ug/l	2.0	--	1
1,1,2,2-Tetrachloroethane	ND		ug/l	1.0	--	1
Benzene	ND		ug/l	0.50	--	1
Toluene	ND		ug/l	1.0	--	1
Ethylbenzene	ND		ug/l	1.0	--	1
Chloromethane	ND		ug/l	2.0	--	1
Bromomethane	ND		ug/l	2.0	--	1
Vinyl chloride	16		ug/l	1.0	--	1
Chloroethane	ND		ug/l	2.0	--	1
1,1-Dichloroethene	ND		ug/l	1.0	--	1
trans-1,2-Dichloroethene	25		ug/l	1.0	--	1
Trichloroethene	5.4		ug/l	1.0	--	1
1,2-Dichlorobenzene	ND		ug/l	1.0	--	1

Project Name: NBHS IRA **Lab Number:** L1517568

Project Number: 115058 **Report Date:** 08/04/15

SAMPLE RESULTS

Lab ID: L1517568-08 Date Collected: 07/27/15 16:30

Client ID: MW-41 Date Received: 07/28/15

Sample Location: NEW BEDFORD, MA Field Prep: Not Specified

Parameter	Result	Qualifier	Units	RL	MDL	Dilution Factor
MCP Volatile Organics - Westborough Lab						
1,3-Dichlorobenzene	2.0		ug/l	1.0	--	1
1,4-Dichlorobenzene	2.9		ug/l	1.0	--	1
Methyl tert butyl ether	ND		ug/l	2.0	--	1
p/m-Xylene	ND		ug/l	2.0	--	1
o-Xylene	ND		ug/l	1.0	--	1
Xylene (Total)	ND		ug/l	1.0	--	1
cis-1,2-Dichloroethene	55		ug/l	1.0	--	1
1,2-Dichloroethene (total)	80		ug/l	1.0	--	1
Dibromomethane	ND		ug/l	2.0	--	1
1,2,3-Trichloropropane	ND		ug/l	2.0	--	1
Styrene	ND		ug/l	1.0	--	1
Dichlorodifluoromethane	ND		ug/l	2.0	--	1
Acetone	ND		ug/l	5.0	--	1
Carbon disulfide	ND		ug/l	2.0	--	1
2-Butanone	ND		ug/l	5.0	--	1
4-Methyl-2-pentanone	ND		ug/l	5.0	--	1
2-Hexanone	ND		ug/l	5.0	--	1
Bromochloromethane	ND		ug/l	2.0	--	1
Tetrahydrofuran	ND		ug/l	2.0	--	1
2,2-Dichloropropane	ND		ug/l	2.0	--	1
1,2-Dibromoethane	ND		ug/l	2.0	--	1
1,3-Dichloropropane	ND		ug/l	2.0	--	1
1,1,1,2-Tetrachloroethane	ND		ug/l	1.0	--	1
Bromobenzene	ND		ug/l	2.0	--	1
n-Butylbenzene	ND		ug/l	2.0	--	1
sec-Butylbenzene	ND		ug/l	2.0	--	1
tert-Butylbenzene	ND		ug/l	2.0	--	1
o-Chlorotoluene	ND		ug/l	2.0	--	1
p-Chlorotoluene	ND		ug/l	2.0	--	1
1,2-Dibromo-3-chloropropane	ND		ug/l	2.0	--	1
Hexachlorobutadiene	ND		ug/l	0.60	--	1
Isopropylbenzene	ND		ug/l	2.0	--	1
p-Isopropyltoluene	ND		ug/l	2.0	--	1
Naphthalene	ND		ug/l	2.0	--	1
n-Propylbenzene	ND		ug/l	2.0	--	1
1,2,3-Trichlorobenzene	ND		ug/l	2.0	--	1
1,2,4-Trichlorobenzene	ND		ug/l	2.0	--	1
1,3,5-Trimethylbenzene	ND		ug/l	2.0	--	1
1,2,4-Trimethylbenzene	ND		ug/l	2.0	--	1

Project Name: NBHS IRA **Lab Number:** L1517568

Project Number: 115058 **Report Date:** 08/04/15

SAMPLE RESULTS

Lab ID: L1517568-08 Date Collected: 07/27/15 16:30

Client ID: MW-41 Date Received: 07/28/15

Sample Location: NEW BEDFORD, MA Field Prep: Not Specified

Parameter	Result	Qualifier	Units	RL	MDL	Dilution Factor
MCP Volatile Organics - Westborough Lab						
Ethyl ether	ND		ug/l	2.0	--	1
Isopropyl Ether	ND		ug/l	2.0	--	1
Ethyl-Tert-Butyl-Ether	ND		ug/l	2.0	--	1
Tertiary-Amyl Methyl Ether	ND		ug/l	2.0	--	1
1,4-Dioxane	ND		ug/l	250	--	1

Surrogate	% Recovery	Qualifier	Acceptance Criteria
1,2-Dichloroethane-d4	112		70-130
Toluene-d8	102		70-130
4-Bromofluorobenzene	94		70-130
Dibromofluoromethane	100		70-130

Project Name: NBHS IRA
Project Number: 115058
Lab Number: L1517568
Report Date: 08/04/15

SAMPLE RESULTS

Lab ID: L1517568-10
Client ID: DUP
Sample Location: NEW BEDFORD, MA
Matrix: Water
Analytical Method: 97,8260C
Analytical Date: 08/01/15 10:45
Analyst: MM

Date Collected: 07/27/15 00:00
Date Received: 07/28/15
Field Prep: Not Specified

Parameter	Result	Qualifier	Units	RL	MDL	Dilution Factor
MCP Volatile Organics - Westborough Lab						
Methylene chloride	ND		ug/l	2.0	--	1
1,1-Dichloroethane	ND		ug/l	1.0	--	1
Chloroform	ND		ug/l	1.0	--	1
Carbon tetrachloride	ND		ug/l	1.0	--	1
1,2-Dichloropropane	ND		ug/l	1.0	--	1
Dibromochloromethane	ND		ug/l	1.0	--	1
1,1,2-Trichloroethane	ND		ug/l	1.0	--	1
Tetrachloroethene	ND		ug/l	1.0	--	1
Chlorobenzene	ND		ug/l	1.0	--	1
Trichlorofluoromethane	ND		ug/l	2.0	--	1
1,2-Dichloroethane	ND		ug/l	1.0	--	1
1,1,1-Trichloroethane	ND		ug/l	1.0	--	1
Bromodichloromethane	ND		ug/l	1.0	--	1
trans-1,3-Dichloropropene	ND		ug/l	0.50	--	1
cis-1,3-Dichloropropene	ND		ug/l	0.50	--	1
1,3-Dichloropropene, Total	ND		ug/l	0.50	--	1
1,1-Dichloropropene	ND		ug/l	2.0	--	1
Bromoform	ND		ug/l	2.0	--	1
1,1,2,2-Tetrachloroethane	ND		ug/l	1.0	--	1
Benzene	ND		ug/l	0.50	--	1
Toluene	ND		ug/l	1.0	--	1
Ethylbenzene	ND		ug/l	1.0	--	1
Chloromethane	ND		ug/l	2.0	--	1
Bromomethane	ND		ug/l	2.0	--	1
Vinyl chloride	4.4		ug/l	1.0	--	1
Chloroethane	ND		ug/l	2.0	--	1
1,1-Dichloroethene	ND		ug/l	1.0	--	1
trans-1,2-Dichloroethene	2.4		ug/l	1.0	--	1
Trichloroethene	2.8		ug/l	1.0	--	1
1,2-Dichlorobenzene	ND		ug/l	1.0	--	1

Project Name: NBHS IRA **Lab Number:** L1517568

Project Number: 115058 **Report Date:** 08/04/15

SAMPLE RESULTS

Lab ID: L1517568-10 Date Collected: 07/27/15 00:00

Client ID: DUP Date Received: 07/28/15

Sample Location: NEW BEDFORD, MA Field Prep: Not Specified

Parameter	Result	Qualifier	Units	RL	MDL	Dilution Factor
MCP Volatile Organics - Westborough Lab						
1,3-Dichlorobenzene	ND		ug/l	1.0	--	1
1,4-Dichlorobenzene	ND		ug/l	1.0	--	1
Methyl tert butyl ether	ND		ug/l	2.0	--	1
p/m-Xylene	ND		ug/l	2.0	--	1
o-Xylene	ND		ug/l	1.0	--	1
Xylene (Total)	ND		ug/l	1.0	--	1
cis-1,2-Dichloroethene	3.7		ug/l	1.0	--	1
1,2-Dichloroethene (total)	6.1		ug/l	1.0	--	1
Dibromomethane	ND		ug/l	2.0	--	1
1,2,3-Trichloropropane	ND		ug/l	2.0	--	1
Styrene	ND		ug/l	1.0	--	1
Dichlorodifluoromethane	ND		ug/l	2.0	--	1
Acetone	ND		ug/l	5.0	--	1
Carbon disulfide	ND		ug/l	2.0	--	1
2-Butanone	ND		ug/l	5.0	--	1
4-Methyl-2-pentanone	ND		ug/l	5.0	--	1
2-Hexanone	ND		ug/l	5.0	--	1
Bromochloromethane	ND		ug/l	2.0	--	1
Tetrahydrofuran	ND		ug/l	2.0	--	1
2,2-Dichloropropane	ND		ug/l	2.0	--	1
1,2-Dibromoethane	ND		ug/l	2.0	--	1
1,3-Dichloropropane	ND		ug/l	2.0	--	1
1,1,1,2-Tetrachloroethane	ND		ug/l	1.0	--	1
Bromobenzene	ND		ug/l	2.0	--	1
n-Butylbenzene	ND		ug/l	2.0	--	1
sec-Butylbenzene	ND		ug/l	2.0	--	1
tert-Butylbenzene	ND		ug/l	2.0	--	1
o-Chlorotoluene	ND		ug/l	2.0	--	1
p-Chlorotoluene	ND		ug/l	2.0	--	1
1,2-Dibromo-3-chloropropane	ND		ug/l	2.0	--	1
Hexachlorobutadiene	ND		ug/l	0.60	--	1
Isopropylbenzene	ND		ug/l	2.0	--	1
p-Isopropyltoluene	ND		ug/l	2.0	--	1
Naphthalene	ND		ug/l	2.0	--	1
n-Propylbenzene	ND		ug/l	2.0	--	1
1,2,3-Trichlorobenzene	ND		ug/l	2.0	--	1
1,2,4-Trichlorobenzene	ND		ug/l	2.0	--	1
1,3,5-Trimethylbenzene	ND		ug/l	2.0	--	1
1,2,4-Trimethylbenzene	ND		ug/l	2.0	--	1

Project Name: NBHS IRA **Lab Number:** L1517568

Project Number: 115058 **Report Date:** 08/04/15

SAMPLE RESULTS

Lab ID: L1517568-10 Date Collected: 07/27/15 00:00

Client ID: DUP Date Received: 07/28/15

Sample Location: NEW BEDFORD, MA Field Prep: Not Specified

Parameter	Result	Qualifier	Units	RL	MDL	Dilution Factor
MCP Volatile Organics - Westborough Lab						
Ethyl ether	ND		ug/l	2.0	--	1
Isopropyl Ether	ND		ug/l	2.0	--	1
Ethyl-Tert-Butyl-Ether	ND		ug/l	2.0	--	1
Tertiary-Amyl Methyl Ether	ND		ug/l	2.0	--	1
1,4-Dioxane	ND		ug/l	250	--	1

Surrogate	% Recovery	Qualifier	Acceptance Criteria
1,2-Dichloroethane-d4	114		70-130
Toluene-d8	101		70-130
4-Bromofluorobenzene	99		70-130
Dibromofluoromethane	100		70-130

Project Name: NBHS IRA
Project Number: 115058
Lab Number: L1517568
Report Date: 08/04/15

SAMPLE RESULTS

Lab ID: L1517568-12
Client ID: TRIP BLANK
Sample Location: NEW BEDFORD, MA
Matrix: Water
Analytical Method: 97,8260C
Analytical Date: 08/01/15 06:30
Analyst: MM

Date Collected: 07/27/15 00:00
Date Received: 07/28/15
Field Prep: Not Specified

Parameter	Result	Qualifier	Units	RL	MDL	Dilution Factor
MCP Volatile Organics - Westborough Lab						
Methylene chloride	ND		ug/l	2.0	--	1
1,1-Dichloroethane	ND		ug/l	1.0	--	1
Chloroform	ND		ug/l	1.0	--	1
Carbon tetrachloride	ND		ug/l	1.0	--	1
1,2-Dichloropropane	ND		ug/l	1.0	--	1
Dibromochloromethane	ND		ug/l	1.0	--	1
1,1,2-Trichloroethane	ND		ug/l	1.0	--	1
Tetrachloroethene	ND		ug/l	1.0	--	1
Chlorobenzene	ND		ug/l	1.0	--	1
Trichlorofluoromethane	ND		ug/l	2.0	--	1
1,2-Dichloroethane	ND		ug/l	1.0	--	1
1,1,1-Trichloroethane	ND		ug/l	1.0	--	1
Bromodichloromethane	ND		ug/l	1.0	--	1
trans-1,3-Dichloropropene	ND		ug/l	0.50	--	1
cis-1,3-Dichloropropene	ND		ug/l	0.50	--	1
1,3-Dichloropropene, Total	ND		ug/l	0.50	--	1
1,1-Dichloropropene	ND		ug/l	2.0	--	1
Bromoform	ND		ug/l	2.0	--	1
1,1,2,2-Tetrachloroethane	ND		ug/l	1.0	--	1
Benzene	ND		ug/l	0.50	--	1
Toluene	ND		ug/l	1.0	--	1
Ethylbenzene	ND		ug/l	1.0	--	1
Chloromethane	ND		ug/l	2.0	--	1
Bromomethane	ND		ug/l	2.0	--	1
Vinyl chloride	ND		ug/l	1.0	--	1
Chloroethane	ND		ug/l	2.0	--	1
1,1-Dichloroethene	ND		ug/l	1.0	--	1
trans-1,2-Dichloroethene	ND		ug/l	1.0	--	1
Trichloroethene	ND		ug/l	1.0	--	1
1,2-Dichlorobenzene	ND		ug/l	1.0	--	1

Project Name: NBHS IRA **Lab Number:** L1517568

Project Number: 115058 **Report Date:** 08/04/15

SAMPLE RESULTS

Lab ID: L1517568-12 Date Collected: 07/27/15 00:00

Client ID: TRIP BLANK Date Received: 07/28/15

Sample Location: NEW BEDFORD, MA Field Prep: Not Specified

Parameter	Result	Qualifier	Units	RL	MDL	Dilution Factor
MCP Volatile Organics - Westborough Lab						
1,3-Dichlorobenzene	ND		ug/l	1.0	--	1
1,4-Dichlorobenzene	ND		ug/l	1.0	--	1
Methyl tert butyl ether	ND		ug/l	2.0	--	1
p/m-Xylene	ND		ug/l	2.0	--	1
o-Xylene	ND		ug/l	1.0	--	1
Xylene (Total)	ND		ug/l	1.0	--	1
cis-1,2-Dichloroethene	ND		ug/l	1.0	--	1
1,2-Dichloroethene (total)	ND		ug/l	1.0	--	1
Dibromomethane	ND		ug/l	2.0	--	1
1,2,3-Trichloropropane	ND		ug/l	2.0	--	1
Styrene	ND		ug/l	1.0	--	1
Dichlorodifluoromethane	ND		ug/l	2.0	--	1
Acetone	ND		ug/l	5.0	--	1
Carbon disulfide	ND		ug/l	2.0	--	1
2-Butanone	ND		ug/l	5.0	--	1
4-Methyl-2-pentanone	ND		ug/l	5.0	--	1
2-Hexanone	ND		ug/l	5.0	--	1
Bromochloromethane	ND		ug/l	2.0	--	1
Tetrahydrofuran	ND		ug/l	2.0	--	1
2,2-Dichloropropane	ND		ug/l	2.0	--	1
1,2-Dibromoethane	ND		ug/l	2.0	--	1
1,3-Dichloropropane	ND		ug/l	2.0	--	1
1,1,1,2-Tetrachloroethane	ND		ug/l	1.0	--	1
Bromobenzene	ND		ug/l	2.0	--	1
n-Butylbenzene	ND		ug/l	2.0	--	1
sec-Butylbenzene	ND		ug/l	2.0	--	1
tert-Butylbenzene	ND		ug/l	2.0	--	1
o-Chlorotoluene	ND		ug/l	2.0	--	1
p-Chlorotoluene	ND		ug/l	2.0	--	1
1,2-Dibromo-3-chloropropane	ND		ug/l	2.0	--	1
Hexachlorobutadiene	ND		ug/l	0.60	--	1
Isopropylbenzene	ND		ug/l	2.0	--	1
p-Isopropyltoluene	ND		ug/l	2.0	--	1
Naphthalene	ND		ug/l	2.0	--	1
n-Propylbenzene	ND		ug/l	2.0	--	1
1,2,3-Trichlorobenzene	ND		ug/l	2.0	--	1
1,2,4-Trichlorobenzene	ND		ug/l	2.0	--	1
1,3,5-Trimethylbenzene	ND		ug/l	2.0	--	1
1,2,4-Trimethylbenzene	ND		ug/l	2.0	--	1

Project Name: NBHS IRA **Lab Number:** L1517568

Project Number: 115058 **Report Date:** 08/04/15

SAMPLE RESULTS

Lab ID: L1517568-12 Date Collected: 07/27/15 00:00

Client ID: TRIP BLANK Date Received: 07/28/15

Sample Location: NEW BEDFORD, MA Field Prep: Not Specified

Parameter	Result	Qualifier	Units	RL	MDL	Dilution Factor
MCP Volatile Organics - Westborough Lab						
Ethyl ether	ND		ug/l	2.0	--	1
Isopropyl Ether	ND		ug/l	2.0	--	1
Ethyl-Tert-Butyl-Ether	ND		ug/l	2.0	--	1
Tertiary-Amyl Methyl Ether	ND		ug/l	2.0	--	1
1,4-Dioxane	ND		ug/l	250	--	1

Surrogate	% Recovery	Qualifier	Acceptance Criteria
1,2-Dichloroethane-d4	112		70-130
Toluene-d8	103		70-130
4-Bromofluorobenzene	100		70-130
Dibromofluoromethane	96		70-130

Project Name: NBHS IRA
Project Number: 115058

Lab Number: L1517568
Report Date: 08/04/15

Method Blank Analysis
Batch Quality Control

Analytical Method: 97,8260C
Analytical Date: 08/01/15 05:58
Analyst: MM

Parameter	Result	Qualifier	Units	RL	MDL
MCP Volatile Organics - Westborough Lab for sample(s): 01,03,05-06,08,10,12 Batch: WG808108-3					
Methylene chloride	ND		ug/l	2.0	--
1,1-Dichloroethane	ND		ug/l	1.0	--
Chloroform	ND		ug/l	1.0	--
Carbon tetrachloride	ND		ug/l	1.0	--
1,2-Dichloropropane	ND		ug/l	1.0	--
Dibromochloromethane	ND		ug/l	1.0	--
1,1,2-Trichloroethane	ND		ug/l	1.0	--
Tetrachloroethene	ND		ug/l	1.0	--
Chlorobenzene	ND		ug/l	1.0	--
Trichlorofluoromethane	ND		ug/l	2.0	--
1,2-Dichloroethane	ND		ug/l	1.0	--
1,1,1-Trichloroethane	ND		ug/l	1.0	--
Bromodichloromethane	ND		ug/l	1.0	--
trans-1,3-Dichloropropene	ND		ug/l	0.50	--
cis-1,3-Dichloropropene	ND		ug/l	0.50	--
1,3-Dichloropropene, Total	ND		ug/l	0.50	--
1,1-Dichloropropene	ND		ug/l	2.0	--
Bromoform	ND		ug/l	2.0	--
1,1,2,2-Tetrachloroethane	ND		ug/l	1.0	--
Benzene	ND		ug/l	0.50	--
Toluene	ND		ug/l	1.0	--
Ethylbenzene	ND		ug/l	1.0	--
Chloromethane	ND		ug/l	2.0	--
Bromomethane	ND		ug/l	2.0	--
Vinyl chloride	ND		ug/l	1.0	--
Chloroethane	ND		ug/l	2.0	--
1,1-Dichloroethene	ND		ug/l	1.0	--
trans-1,2-Dichloroethene	ND		ug/l	1.0	--
Trichloroethene	ND		ug/l	1.0	--

Project Name: NBHS IRA
Project Number: 115058

Lab Number: L1517568
Report Date: 08/04/15

Method Blank Analysis
Batch Quality Control

Analytical Method: 97,8260C
Analytical Date: 08/01/15 05:58
Analyst: MM

Parameter	Result	Qualifier	Units	RL	MDL
MCP Volatile Organics - Westborough Lab for sample(s): 01,03,05-06,08,10,12 Batch: WG808108-3					
1,2-Dichlorobenzene	ND		ug/l	1.0	--
1,3-Dichlorobenzene	ND		ug/l	1.0	--
1,4-Dichlorobenzene	ND		ug/l	1.0	--
Methyl tert butyl ether	ND		ug/l	2.0	--
p/m-Xylene	ND		ug/l	2.0	--
o-Xylene	ND		ug/l	1.0	--
Xylene (Total)	ND		ug/l	1.0	--
cis-1,2-Dichloroethene	ND		ug/l	1.0	--
1,2-Dichloroethene (total)	ND		ug/l	1.0	--
Dibromomethane	ND		ug/l	2.0	--
1,2,3-Trichloropropane	ND		ug/l	2.0	--
Styrene	ND		ug/l	1.0	--
Dichlorodifluoromethane	ND		ug/l	2.0	--
Acetone	ND		ug/l	5.0	--
Carbon disulfide	ND		ug/l	2.0	--
2-Butanone	ND		ug/l	5.0	--
4-Methyl-2-pentanone	ND		ug/l	5.0	--
2-Hexanone	ND		ug/l	5.0	--
Bromochloromethane	ND		ug/l	2.0	--
Tetrahydrofuran	ND		ug/l	2.0	--
2,2-Dichloropropane	ND		ug/l	2.0	--
1,2-Dibromoethane	ND		ug/l	2.0	--
1,3-Dichloropropane	ND		ug/l	2.0	--
1,1,1,2-Tetrachloroethane	ND		ug/l	1.0	--
Bromobenzene	ND		ug/l	2.0	--
n-Butylbenzene	ND		ug/l	2.0	--
sec-Butylbenzene	ND		ug/l	2.0	--
tert-Butylbenzene	ND		ug/l	2.0	--
o-Chlorotoluene	ND		ug/l	2.0	--

Project Name: NBHS IRA
Project Number: 115058

Lab Number: L1517568
Report Date: 08/04/15

Method Blank Analysis
Batch Quality Control

Analytical Method: 97,8260C
Analytical Date: 08/01/15 05:58
Analyst: MM

Parameter	Result	Qualifier	Units	RL	MDL
MCP Volatile Organics - Westborough Lab for sample(s): 01,03,05-06,08,10,12 Batch: WG808108-3					
p-Chlorotoluene	ND		ug/l	2.0	--
1,2-Dibromo-3-chloropropane	ND		ug/l	2.0	--
Hexachlorobutadiene	ND		ug/l	0.60	--
Isopropylbenzene	ND		ug/l	2.0	--
p-Isopropyltoluene	ND		ug/l	2.0	--
Naphthalene	ND		ug/l	2.0	--
n-Propylbenzene	ND		ug/l	2.0	--
1,2,3-Trichlorobenzene	ND		ug/l	2.0	--
1,2,4-Trichlorobenzene	ND		ug/l	2.0	--
1,3,5-Trimethylbenzene	ND		ug/l	2.0	--
1,2,4-Trimethylbenzene	ND		ug/l	2.0	--
Ethyl ether	ND		ug/l	2.0	--
Isopropyl Ether	ND		ug/l	2.0	--
Ethyl-Tert-Butyl-Ether	ND		ug/l	2.0	--
Tertiary-Amyl Methyl Ether	ND		ug/l	2.0	--
1,4-Dioxane	ND		ug/l	250	--
1,1,2-Trichloro-1,2,2-Trifluoroethane	ND		ug/l	2.0	--

Surrogate	%Recovery	Qualifier	Acceptance Criteria
1,2-Dichloroethane-d4	109		70-130
Toluene-d8	103		70-130
4-Bromofluorobenzene	101		70-130
Dibromofluoromethane	95		70-130

Lab Control Sample Analysis
Batch Quality Control

Project Name: NBHS IRA
Project Number: 115058

Lab Number: L1517568
Report Date: 08/04/15

Parameter	LCS %Recovery	Qual	LCSD %Recovery	Qual	%Recovery Limits	RPD	Qual	RPD Limits
MCP Volatile Organics - Westborough Lab Associated sample(s): 01,03,05-06,08,10,12 Batch: WG808108-1 WG808108-2								
Methylene chloride	97		90		70-130	7		20
1,1-Dichloroethane	95		90		70-130	5		20
Chloroform	102		96		70-130	6		20
Carbon tetrachloride	98		92		70-130	6		20
1,2-Dichloropropane	93		88		70-130	6		20
Dibromochloromethane	114		108		70-130	5		20
1,1,2-Trichloroethane	110		104		70-130	6		20
Tetrachloroethene	106		99		70-130	7		20
Chlorobenzene	107		101		70-130	6		20
Trichlorofluoromethane	102		96		70-130	6		20
1,2-Dichloroethane	106		100		70-130	6		20
1,1,1-Trichloroethane	101		96		70-130	5		20
Bromodichloromethane	105		100		70-130	5		20
trans-1,3-Dichloropropene	92		86		70-130	7		20
cis-1,3-Dichloropropene	87		83		70-130	5		20
1,1-Dichloropropene	99		94		70-130	5		20
Bromoform	115		110		70-130	4		20
1,1,2,2-Tetrachloroethane	110		104		70-130	6		20
Benzene	96		91		70-130	5		20
Toluene	103		98		70-130	5		20
Ethylbenzene	109		103		70-130	6		20

Lab Control Sample Analysis
Batch Quality Control

Project Name: NBHS IRA
Project Number: 115058

Lab Number: L1517568
Report Date: 08/04/15

Parameter	LCS %Recovery	Qual	LCSD %Recovery	Qual	%Recovery Limits	RPD	Qual	RPD Limits
MCP Volatile Organics - Westborough Lab Associated sample(s): 01,03,05-06,08,10,12 Batch: WG808108-1 WG808108-2								
Chloromethane	74		72		70-130	3		20
Bromomethane	81		80		70-130	1		20
Vinyl chloride	88		84		70-130	5		20
Chloroethane	88		82		70-130	7		20
1,1-Dichloroethene	91		87		70-130	4		20
trans-1,2-Dichloroethene	94		88		70-130	7		20
Trichloroethene	96		92		70-130	4		20
1,2-Dichlorobenzene	113		107		70-130	5		20
1,3-Dichlorobenzene	109		102		70-130	7		20
1,4-Dichlorobenzene	110		105		70-130	5		20
Methyl tert butyl ether	98		94		70-130	4		20
p/m-Xylene	109		103		70-130	6		20
o-Xylene	110		104		70-130	6		20
cis-1,2-Dichloroethene	96		89		70-130	8		20
Dibromomethane	107		100		70-130	7		20
1,2,3-Trichloropropane	114		108		70-130	5		20
Styrene	112		105		70-130	6		20
Dichlorodifluoromethane	98		92		70-130	6		20
Acetone	110		101		70-130	9		20
Carbon disulfide	82		78		70-130	5		20
2-Butanone	110		105		70-130	5		20

Lab Control Sample Analysis
Batch Quality Control

Project Name: NBHS IRA
Project Number: 115058

Lab Number: L1517568
Report Date: 08/04/15

Parameter	LCS %Recovery	Qual	LCSD %Recovery	Qual	%Recovery Limits	RPD	Qual	RPD Limits
MCP Volatile Organics - Westborough Lab Associated sample(s): 01,03,05-06,08,10,12 Batch: WG808108-1 WG808108-2								
4-Methyl-2-pentanone	100		96		70-130	4		20
2-Hexanone	108		105		70-130	3		20
Bromochloromethane	102		93		70-130	9		20
Tetrahydrofuran	91		88		70-130	3		20
2,2-Dichloropropane	93		86		70-130	8		20
1,2-Dibromoethane	121		110		70-130	10		20
1,3-Dichloropropane	111		104		70-130	7		20
1,1,1,2-Tetrachloroethane	111		104		70-130	7		20
Bromobenzene	109		103		70-130	6		20
n-Butylbenzene	108		102		70-130	6		20
sec-Butylbenzene	108		102		70-130	6		20
tert-Butylbenzene	108		103		70-130	5		20
o-Chlorotoluene	108		102		70-130	6		20
p-Chlorotoluene	109		104		70-130	5		20
1,2-Dibromo-3-chloropropane	116		112		70-130	4		20
Hexachlorobutadiene	113		108		70-130	5		20
Isopropylbenzene	109		102		70-130	7		20
p-Isopropyltoluene	111		105		70-130	6		20
Naphthalene	106		105		70-130	1		20
n-Propylbenzene	110		104		70-130	6		20
1,2,3-Trichlorobenzene	118		115		70-130	3		20

Lab Control Sample Analysis
Batch Quality Control

Project Name: NBHS IRA
Project Number: 115058

Lab Number: L1517568
Report Date: 08/04/15

Parameter	LCS %Recovery	Qual	LCSD %Recovery	Qual	%Recovery Limits	RPD	Qual	RPD Limits
MCP Volatile Organics - Westborough Lab Associated sample(s): 01,03,05-06,08,10,12 Batch: WG808108-1 WG808108-2								
1,2,4-Trichlorobenzene	111		107		70-130	4		20
1,3,5-Trimethylbenzene	112		106		70-130	6		20
1,2,4-Trimethylbenzene	113		107		70-130	5		20
Ethyl ether	102		96		70-130	6		20
Isopropyl Ether	84		80		70-130	5		20
Ethyl-Tert-Butyl-Ether	90		86		70-130	5		20
Tertiary-Amyl Methyl Ether	88		85		70-130	3		20
1,4-Dioxane	111		107		70-130	4		20
1,1,2-Trichloro-1,2,2-Trifluoroethane	100		94		70-130	6		20

Surrogate	LCS %Recovery	Qual	LCSD %Recovery	Qual	Acceptance Criteria
1,2-Dichloroethane-d4	108		107		70-130
Toluene-d8	103		103		70-130
4-Bromofluorobenzene	96		96		70-130
Dibromofluoromethane	98		99		70-130

PCBS

Project Name: NBHS IRA
Project Number: 115058

Lab Number: L1517568
Report Date: 08/04/15

SAMPLE RESULTS

Lab ID:	L1517568-01	Date Collected:	07/27/15 11:30
Client ID:	MW-42R	Date Received:	07/28/15
Sample Location:	NEW BEDFORD, MA	Field Prep:	Not Specified
Matrix:	Water	Extraction Method:	EPA 3510C
Analytical Method:	97,8082A	Extraction Date:	07/30/15 21:04
Analytical Date:	07/31/15 14:21	Cleanup Method:	EPA 3665A
Analyst:	JT	Cleanup Date:	07/31/15
		Cleanup Method:	EPA 3660B
		Cleanup Date:	07/31/15

Parameter	Result	Qualifier	Units	RL	MDL	Dilution Factor	Column
MCP Polychlorinated Biphenyls - Westborough Lab							
Aroclor 1016	ND		ug/l	0.250	--	1	A
Aroclor 1221	ND		ug/l	0.250	--	1	A
Aroclor 1232	ND		ug/l	0.250	--	1	A
Aroclor 1242	ND		ug/l	0.250	--	1	A
Aroclor 1248	ND		ug/l	0.250	--	1	A
Aroclor 1254	3.43		ug/l	0.250	--	1	B
Aroclor 1260	ND		ug/l	0.250	--	1	A
Aroclor 1262	ND		ug/l	0.250	--	1	A
Aroclor 1268	ND		ug/l	0.250	--	1	A
PCBs, Total	3.43		ug/l	0.250	--	1	A

Surrogate	% Recovery	Qualifier	Acceptance Criteria	Column
2,4,5,6-Tetrachloro-m-xylene	80		30-150	A
Decachlorobiphenyl	94		30-150	A
2,4,5,6-Tetrachloro-m-xylene	86		30-150	B
Decachlorobiphenyl	101		30-150	B

Project Name: NBHS IRA
Project Number: 115058

Lab Number: L1517568
Report Date: 08/04/15

SAMPLE RESULTS

Lab ID:	L1517568-02	Date Collected:	07/27/15 11:30
Client ID:	MW-42R-FILTERED	Date Received:	07/28/15
Sample Location:	NEW BEDFORD, MA	Field Prep:	Not Specified
Matrix:	Water	Extraction Method:	EPA 3510C
Analytical Method:	97,8082A	Extraction Date:	07/30/15 21:04
Analytical Date:	07/31/15 14:37	Cleanup Method:	EPA 3665A
Analyst:	JT	Cleanup Date:	07/31/15
		Cleanup Method:	EPA 3660B
		Cleanup Date:	07/31/15

Parameter	Result	Qualifier	Units	RL	MDL	Dilution Factor	Column
MCP Polychlorinated Biphenyls - Westborough Lab							
Aroclor 1016	ND		ug/l	0.250	--	1	A
Aroclor 1221	ND		ug/l	0.250	--	1	A
Aroclor 1232	ND		ug/l	0.250	--	1	A
Aroclor 1242	ND		ug/l	0.250	--	1	A
Aroclor 1248	ND		ug/l	0.250	--	1	A
Aroclor 1254	0.548		ug/l	0.250	--	1	B
Aroclor 1260	ND		ug/l	0.250	--	1	A
Aroclor 1262	ND		ug/l	0.250	--	1	A
Aroclor 1268	ND		ug/l	0.250	--	1	A
PCBs, Total	0.548		ug/l	0.250	--	1	A

Surrogate	% Recovery	Qualifier	Acceptance Criteria	Column
2,4,5,6-Tetrachloro-m-xylene	78		30-150	A
Decachlorobiphenyl	90		30-150	A
2,4,5,6-Tetrachloro-m-xylene	82		30-150	B
Decachlorobiphenyl	93		30-150	B

Project Name: NBHS IRA
Project Number: 115058

Lab Number: L1517568
Report Date: 08/04/15

SAMPLE RESULTS

Lab ID:	L1517568-03	Date Collected:	07/27/15 12:30
Client ID:	MW-27R	Date Received:	07/28/15
Sample Location:	NEW BEDFORD, MA	Field Prep:	Not Specified
Matrix:	Water	Extraction Method:	EPA 3510C
Analytical Method:	97,8082A	Extraction Date:	07/30/15 21:04
Analytical Date:	07/31/15 14:53	Cleanup Method:	EPA 3665A
Analyst:	JT	Cleanup Date:	07/31/15
		Cleanup Method:	EPA 3660B
		Cleanup Date:	07/31/15

Parameter	Result	Qualifier	Units	RL	MDL	Dilution Factor	Column
MCP Polychlorinated Biphenyls - Westborough Lab							
Aroclor 1016	ND		ug/l	0.250	--	1	A
Aroclor 1221	ND		ug/l	0.250	--	1	A
Aroclor 1232	ND		ug/l	0.250	--	1	A
Aroclor 1242	ND		ug/l	0.250	--	1	A
Aroclor 1248	ND		ug/l	0.250	--	1	A
Aroclor 1254	1.23		ug/l	0.250	--	1	B
Aroclor 1260	ND		ug/l	0.250	--	1	A
Aroclor 1262	ND		ug/l	0.250	--	1	A
Aroclor 1268	ND		ug/l	0.250	--	1	A
PCBs, Total	1.23		ug/l	0.250	--	1	A

Surrogate	% Recovery	Qualifier	Acceptance Criteria	Column
2,4,5,6-Tetrachloro-m-xylene	84		30-150	A
Decachlorobiphenyl	86		30-150	A
2,4,5,6-Tetrachloro-m-xylene	88		30-150	B
Decachlorobiphenyl	92		30-150	B

Project Name: NBHS IRA
Project Number: 115058

Lab Number: L1517568
Report Date: 08/04/15

SAMPLE RESULTS

Lab ID:	L1517568-04	Date Collected:	07/27/15 12:30
Client ID:	MW-27R-FILTERED	Date Received:	07/28/15
Sample Location:	NEW BEDFORD, MA	Field Prep:	Not Specified
Matrix:	Water	Extraction Method:	EPA 3510C
Analytical Method:	97,8082A	Extraction Date:	07/30/15 21:04
Analytical Date:	07/31/15 15:09	Cleanup Method:	EPA 3665A
Analyst:	JT	Cleanup Date:	07/31/15
		Cleanup Method:	EPA 3660B
		Cleanup Date:	07/31/15

Parameter	Result	Qualifier	Units	RL	MDL	Dilution Factor	Column
MCP Polychlorinated Biphenyls - Westborough Lab							
Aroclor 1016	ND		ug/l	0.250	--	1	A
Aroclor 1221	ND		ug/l	0.250	--	1	A
Aroclor 1232	ND		ug/l	0.250	--	1	A
Aroclor 1242	ND		ug/l	0.250	--	1	A
Aroclor 1248	ND		ug/l	0.250	--	1	A
Aroclor 1254	ND		ug/l	0.250	--	1	A
Aroclor 1260	ND		ug/l	0.250	--	1	A
Aroclor 1262	ND		ug/l	0.250	--	1	A
Aroclor 1268	ND		ug/l	0.250	--	1	A
PCBs, Total	ND		ug/l	0.250	--	1	A

Surrogate	% Recovery	Qualifier	Acceptance Criteria	Column
2,4,5,6-Tetrachloro-m-xylene	80		30-150	A
Decachlorobiphenyl	85		30-150	A
2,4,5,6-Tetrachloro-m-xylene	86		30-150	B
Decachlorobiphenyl	92		30-150	B

Project Name: NBHS IRA
Project Number: 115058
Lab Number: L1517568
Report Date: 08/04/15

SAMPLE RESULTS

Lab ID:	L1517568-05	Date Collected:	07/27/15 12:55
Client ID:	MW-32	Date Received:	07/28/15
Sample Location:	NEW BEDFORD, MA	Field Prep:	Not Specified
Matrix:	Water	Extraction Method:	EPA 3510C
Analytical Method:	97,8082A	Extraction Date:	07/30/15 21:04
Analytical Date:	07/31/15 15:25	Cleanup Method:	EPA 3665A
Analyst:	JT	Cleanup Date:	07/31/15
		Cleanup Method:	EPA 3660B
		Cleanup Date:	07/31/15

Parameter	Result	Qualifier	Units	RL	MDL	Dilution Factor	Column
MCP Polychlorinated Biphenyls - Westborough Lab							
Aroclor 1016	ND		ug/l	0.250	--	1	A
Aroclor 1221	ND		ug/l	0.250	--	1	A
Aroclor 1232	ND		ug/l	0.250	--	1	A
Aroclor 1242	ND		ug/l	0.250	--	1	A
Aroclor 1248	ND		ug/l	0.250	--	1	A
Aroclor 1254	ND		ug/l	0.250	--	1	A
Aroclor 1260	ND		ug/l	0.250	--	1	A
Aroclor 1262	ND		ug/l	0.250	--	1	A
Aroclor 1268	ND		ug/l	0.250	--	1	A
PCBs, Total	ND		ug/l	0.250	--	1	A

Surrogate	% Recovery	Qualifier	Acceptance Criteria	Column
2,4,5,6-Tetrachloro-m-xylene	79		30-150	A
Decachlorobiphenyl	80		30-150	A
2,4,5,6-Tetrachloro-m-xylene	84		30-150	B
Decachlorobiphenyl	86		30-150	B

Project Name: NBHS IRA
Project Number: 115058

Lab Number: L1517568
Report Date: 08/04/15

SAMPLE RESULTS

Lab ID:	L1517568-06	Date Collected:	07/27/15 13:00
Client ID:	MW-28	Date Received:	07/28/15
Sample Location:	NEW BEDFORD, MA	Field Prep:	Not Specified
Matrix:	Water	Extraction Method:	EPA 3510C
Analytical Method:	97,8082A	Extraction Date:	07/30/15 21:04
Analytical Date:	07/31/15 15:41	Cleanup Method:	EPA 3665A
Analyst:	JT	Cleanup Date:	07/31/15
		Cleanup Method:	EPA 3660B
		Cleanup Date:	07/31/15

Parameter	Result	Qualifier	Units	RL	MDL	Dilution Factor	Column
MCP Polychlorinated Biphenyls - Westborough Lab							
Aroclor 1016	ND		ug/l	0.250	--	1	A
Aroclor 1221	ND		ug/l	0.250	--	1	A
Aroclor 1232	ND		ug/l	0.250	--	1	A
Aroclor 1242	ND		ug/l	0.250	--	1	A
Aroclor 1248	ND		ug/l	0.250	--	1	A
Aroclor 1254	6.53		ug/l	0.250	--	1	B
Aroclor 1260	ND		ug/l	0.250	--	1	A
Aroclor 1262	ND		ug/l	0.250	--	1	A
Aroclor 1268	ND		ug/l	0.250	--	1	A
PCBs, Total	6.53		ug/l	0.250	--	1	A

Surrogate	% Recovery	Qualifier	Acceptance Criteria	Column
2,4,5,6-Tetrachloro-m-xylene	88		30-150	A
Decachlorobiphenyl	84		30-150	A
2,4,5,6-Tetrachloro-m-xylene	93		30-150	B
Decachlorobiphenyl	91		30-150	B

Project Name: NBHS IRA
Project Number: 115058

Lab Number: L1517568
Report Date: 08/04/15

SAMPLE RESULTS

Lab ID:	L1517568-07	Date Collected:	07/27/15 13:00
Client ID:	MW-28-FILTERED	Date Received:	07/28/15
Sample Location:	NEW BEDFORD, MA	Field Prep:	Not Specified
Matrix:	Water	Extraction Method:	EPA 3510C
Analytical Method:	97,8082A	Extraction Date:	07/30/15 21:04
Analytical Date:	07/31/15 15:57	Cleanup Method:	EPA 3665A
Analyst:	JT	Cleanup Date:	07/31/15
		Cleanup Method:	EPA 3660B
		Cleanup Date:	07/31/15

Parameter	Result	Qualifier	Units	RL	MDL	Dilution Factor	Column
MCP Polychlorinated Biphenyls - Westborough Lab							
Aroclor 1016	ND		ug/l	0.250	--	1	A
Aroclor 1221	ND		ug/l	0.250	--	1	A
Aroclor 1232	ND		ug/l	0.250	--	1	A
Aroclor 1242	ND		ug/l	0.250	--	1	A
Aroclor 1248	ND		ug/l	0.250	--	1	A
Aroclor 1254	ND		ug/l	0.250	--	1	B
Aroclor 1260	ND		ug/l	0.250	--	1	A
Aroclor 1262	ND		ug/l	0.250	--	1	A
Aroclor 1268	ND		ug/l	0.250	--	1	A
PCBs, Total	ND		ug/l	0.250	--	1	A

Surrogate	% Recovery	Qualifier	Acceptance Criteria	Column
2,4,5,6-Tetrachloro-m-xylene	90		30-150	A
Decachlorobiphenyl	93		30-150	A
2,4,5,6-Tetrachloro-m-xylene	96		30-150	B
Decachlorobiphenyl	99		30-150	B

Project Name: NBHS IRA
Project Number: 115058

Lab Number: L1517568
Report Date: 08/04/15

SAMPLE RESULTS

Lab ID:	L1517568-08
Client ID:	MW-41
Sample Location:	NEW BEDFORD, MA
Matrix:	Water
Analytical Method:	97,8082A
Analytical Date:	07/31/15 16:12
Analyst:	JT

Date Collected:	07/27/15 16:30
Date Received:	07/28/15
Field Prep:	Not Specified
Extraction Method:	EPA 3510C
Extraction Date:	07/30/15 21:04
Cleanup Method:	EPA 3665A
Cleanup Date:	07/31/15
Cleanup Method:	EPA 3660B
Cleanup Date:	07/31/15

Parameter	Result	Qualifier	Units	RL	MDL	Dilution Factor	Column
MCP Polychlorinated Biphenyls - Westborough Lab							
Aroclor 1016	ND		ug/l	0.250	--	1	A
Aroclor 1221	ND		ug/l	0.250	--	1	A
Aroclor 1232	ND		ug/l	0.250	--	1	A
Aroclor 1242	ND		ug/l	0.250	--	1	A
Aroclor 1248	ND		ug/l	0.250	--	1	A
Aroclor 1254	3.00		ug/l	0.250	--	1	B
Aroclor 1260	ND		ug/l	0.250	--	1	A
Aroclor 1262	ND		ug/l	0.250	--	1	A
Aroclor 1268	ND		ug/l	0.250	--	1	A
PCBs, Total	3.00		ug/l	0.250	--	1	A

Surrogate	% Recovery	Qualifier	Acceptance Criteria	Column
2,4,5,6-Tetrachloro-m-xylene	92		30-150	A
Decachlorobiphenyl	94		30-150	A
2,4,5,6-Tetrachloro-m-xylene	96		30-150	B
Decachlorobiphenyl	99		30-150	B

Project Name: NBHS IRA
Project Number: 115058

Lab Number: L1517568
Report Date: 08/04/15

SAMPLE RESULTS

Lab ID:	L1517568-09	Date Collected:	07/27/15 16:30
Client ID:	MW-41-FILTERED	Date Received:	07/28/15
Sample Location:	NEW BEDFORD, MA	Field Prep:	Not Specified
Matrix:	Water	Extraction Method:	EPA 3510C
Analytical Method:	97,8082A	Extraction Date:	07/30/15 21:04
Analytical Date:	07/31/15 17:32	Cleanup Method:	EPA 3665A
Analyst:	JT	Cleanup Date:	07/31/15
		Cleanup Method:	EPA 3660B
		Cleanup Date:	07/31/15

Parameter	Result	Qualifier	Units	RL	MDL	Dilution Factor	Column
MCP Polychlorinated Biphenyls - Westborough Lab							
Aroclor 1016	ND		ug/l	0.250	--	1	A
Aroclor 1221	ND		ug/l	0.250	--	1	A
Aroclor 1232	ND		ug/l	0.250	--	1	A
Aroclor 1242	ND		ug/l	0.250	--	1	A
Aroclor 1248	ND		ug/l	0.250	--	1	A
Aroclor 1254	ND		ug/l	0.250	--	1	A
Aroclor 1260	ND		ug/l	0.250	--	1	A
Aroclor 1262	ND		ug/l	0.250	--	1	A
Aroclor 1268	ND		ug/l	0.250	--	1	A
PCBs, Total	ND		ug/l	0.250	--	1	A

Surrogate	% Recovery	Qualifier	Acceptance Criteria	Column
2,4,5,6-Tetrachloro-m-xylene	90		30-150	A
Decachlorobiphenyl	95		30-150	A
2,4,5,6-Tetrachloro-m-xylene	93		30-150	B
Decachlorobiphenyl	102		30-150	B

Project Name: NBHS IRA
Project Number: 115058

Lab Number: L1517568
Report Date: 08/04/15

SAMPLE RESULTS

Lab ID:	L1517568-10
Client ID:	DUP
Sample Location:	NEW BEDFORD, MA
Matrix:	Water
Analytical Method:	97,8082A
Analytical Date:	07/31/15 17:48
Analyst:	JT

Date Collected:	07/27/15 00:00
Date Received:	07/28/15
Field Prep:	Not Specified
Extraction Method:	EPA 3510C
Extraction Date:	07/30/15 21:04
Cleanup Method:	EPA 3665A
Cleanup Date:	07/31/15
Cleanup Method:	EPA 3660B
Cleanup Date:	07/31/15

Parameter	Result	Qualifier	Units	RL	MDL	Dilution Factor	Column
MCP Polychlorinated Biphenyls - Westborough Lab							
Aroclor 1016	ND		ug/l	0.250	--	1	A
Aroclor 1221	ND		ug/l	0.250	--	1	A
Aroclor 1232	ND		ug/l	0.250	--	1	A
Aroclor 1242	ND		ug/l	0.250	--	1	A
Aroclor 1248	ND		ug/l	0.250	--	1	A
Aroclor 1254	3.83		ug/l	0.250	--	1	B
Aroclor 1260	ND		ug/l	0.250	--	1	A
Aroclor 1262	ND		ug/l	0.250	--	1	A
Aroclor 1268	ND		ug/l	0.250	--	1	A
PCBs, Total	3.83		ug/l	0.250	--	1	A

Surrogate	% Recovery	Qualifier	Acceptance Criteria	Column
2,4,5,6-Tetrachloro-m-xylene	95		30-150	A
Decachlorobiphenyl	97		30-150	A
2,4,5,6-Tetrachloro-m-xylene	96		30-150	B
Decachlorobiphenyl	104		30-150	B

Project Name: NBHS IRA
Project Number: 115058
Lab Number: L1517568
Report Date: 08/04/15

SAMPLE RESULTS

Lab ID:	L1517568-11	Date Collected:	07/27/15 00:00
Client ID:	DUP-FILTERED	Date Received:	07/28/15
Sample Location:	NEW BEDFORD, MA	Field Prep:	Not Specified
Matrix:	Water	Extraction Method:	EPA 3510C
Analytical Method:	97,8082A	Extraction Date:	07/30/15 21:04
Analytical Date:	07/31/15 18:04	Cleanup Method:	EPA 3665A
Analyst:	JT	Cleanup Date:	07/31/15
		Cleanup Method:	EPA 3660B
		Cleanup Date:	07/31/15

Parameter	Result	Qualifier	Units	RL	MDL	Dilution Factor	Column
MCP Polychlorinated Biphenyls - Westborough Lab							
Aroclor 1016	ND		ug/l	0.250	--	1	A
Aroclor 1221	ND		ug/l	0.250	--	1	A
Aroclor 1232	ND		ug/l	0.250	--	1	A
Aroclor 1242	ND		ug/l	0.250	--	1	A
Aroclor 1248	ND		ug/l	0.250	--	1	A
Aroclor 1254	ND		ug/l	0.250	--	1	B
Aroclor 1260	ND		ug/l	0.250	--	1	A
Aroclor 1262	ND		ug/l	0.250	--	1	A
Aroclor 1268	ND		ug/l	0.250	--	1	A
PCBs, Total	ND		ug/l	0.250	--	1	A

Surrogate	% Recovery	Qualifier	Acceptance Criteria	Column
2,4,5,6-Tetrachloro-m-xylene	89		30-150	A
Decachlorobiphenyl	93		30-150	A
2,4,5,6-Tetrachloro-m-xylene	94		30-150	B
Decachlorobiphenyl	99		30-150	B

Project Name: NBHS IRA

Project Number: 115058

Lab Number: L1517568

Report Date: 08/04/15

Method Blank Analysis
Batch Quality Control

Analytical Method: 97,8082A
Analytical Date: 07/31/15 16:28
Analyst: JT

Extraction Method: EPA 3510C
Extraction Date: 07/30/15 21:04
Cleanup Method: EPA 3665A
Cleanup Date: 07/31/15
Cleanup Method: EPA 3660B
Cleanup Date: 07/31/15

Parameter	Result	Qualifier	Units	RL	MDL	Column
MCP Polychlorinated Biphenyls - Westborough Lab for sample(s): 01-11 Batch: WG807587-1						
Aroclor 1016	ND		ug/l	0.250	--	A
Aroclor 1221	ND		ug/l	0.250	--	A
Aroclor 1232	ND		ug/l	0.250	--	A
Aroclor 1242	ND		ug/l	0.250	--	A
Aroclor 1248	ND		ug/l	0.250	--	A
Aroclor 1254	ND		ug/l	0.250	--	A
Aroclor 1260	ND		ug/l	0.250	--	A
Aroclor 1262	ND		ug/l	0.250	--	A
Aroclor 1268	ND		ug/l	0.250	--	A
PCBs, Total	ND		ug/l	0.250	--	A

Surrogate	%Recovery	Qualifier	Acceptance Criteria	Column
2,4,5,6-Tetrachloro-m-xylene	63		30-150	A
Decachlorobiphenyl	78		30-150	A
2,4,5,6-Tetrachloro-m-xylene	65		30-150	B
Decachlorobiphenyl	82		30-150	B

Lab Control Sample Analysis
Batch Quality Control

Project Name: NBHS IRA
Project Number: 115058

Lab Number: L1517568
Report Date: 08/04/15

Parameter	LCS %Recovery	Qual	LCSD %Recovery	Qual	%Recovery Limits	RPD	Qual	RPD Limits	Column
MCP Polychlorinated Biphenyls - Westborough Lab Associated sample(s): 01-11 Batch: WG807587-2 WG807587-3									
Aroclor 1016	82		84		40-140	3		20	A
Aroclor 1260	79		82		40-140	3		20	A

Surrogate	LCS %Recovery	Qual	LCSD %Recovery	Qual	Acceptance Criteria	Column
2,4,5,6-Tetrachloro-m-xylene	71		71		30-150	A
Decachlorobiphenyl	87		87		30-150	A
2,4,5,6-Tetrachloro-m-xylene	73		73		30-150	B
Decachlorobiphenyl	93		92		30-150	B

Project Name: NBHS IRA
Project Number: 115058

Lab Number: L1517568
Report Date: 08/04/15

Sample Receipt and Container Information

Were project specific reporting limits specified? YES

Reagent H2O Preserved Vials Frozen on: NA

Cooler Information Custody Seal

Cooler	
A	Absent
B	Absent

Container Information

Container ID	Container Type	Cooler	pH	Temp deg C	Pres	Seal	Analysis(*)
L1517568-01A	Vial HCl preserved	A	N/A	3.4	Y	Absent	MCP-8260-10(14)
L1517568-01B	Vial HCl preserved	A	N/A	3.4	Y	Absent	MCP-8260-10(14)
L1517568-01C	Vial HCl preserved	A	N/A	3.4	Y	Absent	MCP-8260-10(14)
L1517568-01D	Amber 1000ml unpreserved	A	7	3.4	Y	Absent	MCP-8082-10(365)
L1517568-01E	Amber 1000ml unpreserved	A	7	3.4	Y	Absent	MCP-8082-10(365)
L1517568-02A	Amber 1000ml unpreserved	A	7	3.4	Y	Absent	MCP-8082-10(365)
L1517568-02B	Amber 1000ml unpreserved	A	7	3.4	Y	Absent	MCP-8082-10(365)
L1517568-03A	Vial HCl preserved	A	N/A	3.4	Y	Absent	MCP-8260-10(14)
L1517568-03B	Vial HCl preserved	A	N/A	3.4	Y	Absent	MCP-8260-10(14)
L1517568-03C	Vial HCl preserved	A	N/A	3.4	Y	Absent	MCP-8260-10(14)
L1517568-03D	Amber 1000ml unpreserved	A	7	3.4	Y	Absent	MCP-8082-10(365)
L1517568-03E	Amber 1000ml unpreserved	A	7	3.4	Y	Absent	MCP-8082-10(365)
L1517568-04A	Amber 1000ml unpreserved	A	7	3.4	Y	Absent	MCP-8082-10(365)
L1517568-04B	Amber 1000ml unpreserved	A	7	3.4	Y	Absent	MCP-8082-10(365)
L1517568-05A	Vial HCl preserved	B	N/A	3.5	Y	Absent	MCP-8260-10(14)
L1517568-05B	Vial HCl preserved	B	N/A	3.5	Y	Absent	MCP-8260-10(14)
L1517568-05C	Vial HCl preserved	B	N/A	3.5	Y	Absent	MCP-8260-10(14)
L1517568-05D	Amber 1000ml unpreserved	B	7	3.5	Y	Absent	MCP-8082-10(365)
L1517568-05E	Amber 1000ml unpreserved	B	7	3.5	Y	Absent	MCP-8082-10(365)
L1517568-06A	Vial HCl preserved	B	N/A	3.5	Y	Absent	MCP-8260-10(14)
L1517568-06B	Vial HCl preserved	B	N/A	3.5	Y	Absent	MCP-8260-10(14)
L1517568-06C	Vial HCl preserved	B	N/A	3.5	Y	Absent	MCP-8260-10(14)
L1517568-06D	Amber 1000ml unpreserved	B	7	3.5	Y	Absent	MCP-8082-10(365)
L1517568-06E	Amber 1000ml unpreserved	B	7	3.5	Y	Absent	MCP-8082-10(365)
L1517568-07A	Amber 1000ml unpreserved	B	7	3.5	Y	Absent	MCP-8082-10(365)
L1517568-07B	Amber 1000ml unpreserved	B	7	3.5	Y	Absent	MCP-8082-10(365)

*Values in parentheses indicate holding time in days

Project Name: NBHS IRA
Project Number: 115058

Lab Number: L1517568
Report Date: 08/04/15

Container Information

Container ID	Container Type	Cooler	pH	Temp deg C	Pres	Seal	Analysis(*)
L1517568-08A	Vial HCl preserved	B	N/A	3.5	Y	Absent	MCP-8260-10(14)
L1517568-08B	Vial HCl preserved	B	N/A	3.5	Y	Absent	MCP-8260-10(14)
L1517568-08C	Vial HCl preserved	B	N/A	3.5	Y	Absent	MCP-8260-10(14)
L1517568-08D	Amber 1000ml unpreserved	B	7	3.5	Y	Absent	MCP-8082-10(365)
L1517568-08E	Amber 1000ml unpreserved	B	7	3.5	Y	Absent	MCP-8082-10(365)
L1517568-09A	Amber 1000ml unpreserved	B	7	3.5	Y	Absent	MCP-8082-10(365)
L1517568-09B	Amber 1000ml unpreserved	B	7	3.5	Y	Absent	MCP-8082-10(365)
L1517568-10A	Vial HCl preserved	A	N/A	3.4	Y	Absent	MCP-8260-10(14)
L1517568-10B	Vial HCl preserved	A	N/A	3.4	Y	Absent	MCP-8260-10(14)
L1517568-10C	Vial HCl preserved	A	N/A	3.4	Y	Absent	MCP-8260-10(14)
L1517568-10D	Amber 1000ml unpreserved	A	7	3.4	Y	Absent	MCP-8082-10(365)
L1517568-10E	Amber 1000ml unpreserved	A	7	3.4	Y	Absent	MCP-8082-10(365)
L1517568-11A	Amber 1000ml unpreserved	A	7	3.4	Y	Absent	MCP-8082-10(365)
L1517568-11B	Amber 1000ml unpreserved	A	7	3.4	Y	Absent	MCP-8082-10(365)
L1517568-12A	Vial HCl preserved	A	N/A	3.4	Y	Absent	MCP-8260-10(14)
L1517568-12B	Vial HCl preserved	A	N/A	3.4	Y	Absent	MCP-8260-10(14)

*Values in parentheses indicate holding time in days

Project Name:	NBHS IRA	**Lab Number:**	L1517568
Project Number:	115058	**Report Date:**	08/04/15

GLOSSARY

Acronyms

EDL	- Estimated Detection Limit: This value represents the level to which target analyte concentrations are reported as estimated values, when those target analyte concentrations are quantified below the reporting limit (RL). The EDL includes any adjustments from dilutions, concentrations or moisture content, where applicable. The use of EDLs is specific to the analysis of PAHs using Solid-Phase Microextraction (SPME).
EPA	- Environmental Protection Agency.
LCS	- Laboratory Control Sample: A sample matrix, free from the analytes of interest, spiked with verified known amounts of analytes or a material containing known and verified amounts of analytes.
LCSD	- Laboratory Control Sample Duplicate: Refer to LCS.
LFB	- Laboratory Fortified Blank: A sample matrix, free from the analytes of interest, spiked with verified known amounts of analytes or a material containing known and verified amounts of analytes.
MDL	- Method Detection Limit: This value represents the level to which target analyte concentrations are reported as estimated values, when those target analyte concentrations are quantified below the reporting limit (RL). The MDL includes any adjustments from dilutions, concentrations or moisture content, where applicable.
MS	- Matrix Spike Sample: A sample prepared by adding a known mass of target analyte to a specified amount of matrix sample for which an independent estimate of target analyte concentration is available.
MSD	- Matrix Spike Sample Duplicate: Refer to MS.
NA	- Not Applicable.
NC	- Not Calculated: Term is utilized when one or more of the results utilized in the calculation are non-detect at the parameter's reporting unit.
NI	- Not Ignitable.
NP	- Non-Plastic: Term is utilized for the analysis of Atterberg Limits in soil.
RL	- Reporting Limit: The value at which an instrument can accurately measure an analyte at a specific concentration. The RL includes any adjustments from dilutions, concentrations or moisture content, where applicable.
RPD	- Relative Percent Difference: The results from matrix and/or matrix spike duplicates are primarily designed to assess the precision of analytical results in a given matrix and are expressed as relative percent difference (RPD). Values which are less than five times the reporting limit for any individual parameter are evaluated by utilizing the absolute difference between the values; although the RPD value will be provided in the report.
SRM	- Standard Reference Material: A reference sample of a known or certified value that is of the same or similar matrix as the associated field samples.
TIC	- Tentatively Identified Compound: A compound that has been identified to be present and is not part of the target compound list (TCL) for the method and/or program. All TICs are qualitatively identified and reported as estimated concentrations.

Footnotes

1	- The reference for this analyte should be considered modified since this analyte is absent from the target analyte list of the original method.

Terms

Total: With respect to Organic analyses, a 'Total' result is defined as the summation of results for individual isomers or Aroclors. If a 'Total' result is requested, the results of its individual components will also be reported. This is applicable to 'Total' results for methods 8260, 8081 and 8082.

Analytical Method: Both the document from which the method originates and the analytical reference method. (Example: EPA 8260B is shown as 1,8260B.) The codes for the reference method documents are provided in the References section of the Addendum.

Data Qualifiers

A	- Spectra identified as "Aldol Condensation Product".
B	- The analyte was detected above the reporting limit in the associated method blank. Flag only applies to associated field samples that have detectable concentrations of the analyte at less than ten times (10x) the concentration found in the blank. For MCP-related projects, flag only applies to associated field samples that have detectable concentrations of the analyte at less than ten times (10x) the concentration found in the blank. For DOD-related projects, flag only applies to associated field samples that have detectable concentrations of the analyte at less than ten times (10x) the concentration found in the blank AND the analyte was detected above one-half the reporting limit (or above the reporting limit for common lab contaminants) in the associated method blank. For NJ-Air-related projects, flag only applies to associated field samples that have detectable concentrations of the analyte above the reporting limit. For NJ-related projects (excluding Air), flag only applies to associated field samples that have detectable concentrations of the analyte, which was detected above the reporting limit in the associated method blank or above five times the reporting limit for common lab contaminants (Phthalates, Acetone, Methylene Chloride, 2-Butanone).
C	- Co-elution: The target analyte co-elutes with a known lab standard (i.e. surrogate, internal standards, etc.) for co-extracted analyses.

Report Format: Data Usability Report

Project Name: NBHS IRA **Lab Number:** L1517568

Project Number: 115058 **Report Date:** 08/04/15

Data Qualifiers

D - Concentration of analyte was quantified from diluted analysis. Flag only applies to field samples that have detectable concentrations of the analyte.

E - Concentration of analyte exceeds the range of the calibration curve and/or linear range of the instrument.

G - The concentration may be biased high due to matrix interferences (i.e, co-elution) with non-target compound(s). The result should be considered estimated.

H - The analysis of pH was performed beyond the regulatory-required holding time of 15 minutes from the time of sample collection.

I - The lower value for the two columns has been reported due to obvious interference.

M - Reporting Limit (RL) exceeds the MCP CAM Reporting Limit for this analyte.

NJ - Presumptive evidence of compound. This represents an estimated concentration for Tentatively Identified Compounds (TICs), where the identification is based on a mass spectral library search.

P - The RPD between the results for the two columns exceeds the method-specified criteria.

Q - The quality control sample exceeds the associated acceptance criteria. For DOD-related projects, LCS and/or Continuing Calibration Standard exceedences are also qualified on all associated sample results. Note: This flag is not applicable for matrix spike recoveries when the sample concentration is greater than 4x the spike added or for batch duplicate RPD when the sample concentrations are less than 5x the RL. (Metals only.)

R - Analytical results are from sample re-analysis.

RE - Analytical results are from sample re-extraction.

S - Analytical results are from modified screening analysis.

J - Estimated value. This represents an estimated concentration for Tentatively Identified Compounds (TICs).

ND - Not detected at the reporting limit (RL) for the sample.

Report Format: Data Usability Report

Project Name: NBHS IRA
Project Number: 115058
Lab Number: L1517568
Report Date: 08/04/15

REFERENCES

97 EPA Test Methods (SW-846) with QC Requirements & Performance Standards for the Analysis of EPA SW-846 Methods under the Massachusetts Contingency Plan, WSC-CAM-IIA, IIB, IIIA, IIIB, IIIC, IIID, VA, VB, VC, VIA, VIB, VIIIA and VIIIB, July 2010.

LIMITATION OF LIABILITIES

Alpha Analytical performs services with reasonable care and diligence normal to the analytical testing laboratory industry. In the event of an error, the sole and exclusive responsibility of Alpha Analytical shall be to re-perform the work at it's own expense. In no event shall Alpha Analytical be held liable for any incidental, consequential or special damages, including but not limited to, damages in any way connected with the use of, interpretation of, information or analysis provided by Alpha Analytical.

We strongly urge our clients to comply with EPA protocol regarding sample volume, preservation, cooling, containers, sampling procedures, holding time and splitting of samples in the field.

Certification Information

Last revised December 16, 2014

The following analytes are not included in our NELAP Scope of Accreditation:

Westborough Facility
EPA 524.2: Acetone, 2-Butanone (Methyl ethyl ketone (MEK)), Tert-butyl alcohol, 2-Hexanone, Tetrahydrofuran, 1,3,5-Trichlorobenzene, 4-Methyl-2-pentanone (MIBK), Carbon disulfide, Diethyl ether.
EPA 8260C: 1,2,4,5-Tetramethylbenzene, 4-Ethyltoluene, Iodomethane (methyl iodide), Methyl methacrylate, Azobenzene.
EPA 8270D: 1-Methylnaphthalene, Dimethylnaphthalene,1,4-Diphenylhydrazine.
EPA 625: 4-Chloroaniline, 4-Methylphenol.
SM4500: Soil: Total Phosphorus, TKN, NO2, NO3.
EPA 9071: Total Petroleum Hydrocarbons, Oil & Grease.

Mansfield Facility
EPA 8270D: Biphenyl.
EPA 2540D: TSS
EPA TO-15: Halothane, 2,4,4-Trimethyl-2-pentene, 2,4,4-Trimethyl-1-pentene, Thiophene, 2-Methylthiophene, 3-Methylthiophene, 2-Ethylthiophene, 1,2,3-Trimethylbenzene, Indan, Indene, 1,2,4,5-Tetramethylbenzene, Benzothiophene, 1-Methylnaphthalene.

The following analytes are included in our Massachusetts DEP Scope of Accreditation, Westborough Facility:

Drinking Water
EPA 200.8: Sb,As,Ba,Be,Cd,Cr,Cu,Pb,Ni,Se,Tl; **EPA 200.7**: Ba,Be,Ca,Cd,Cr,Cu,Na; **EPA 245.1:** Mercury;
EPA 300.0: Nitrate-N, Fluoride, Sulfate; **EPA 353.2**: Nitrate-N, Nitrite-N; **SM4500NO3-F**: Nitrate-N, Nitrite-N; **SM4500F-C, SM4500CN-CE, EPA 180.1, SM2130B, SM4500Cl-D, SM2320B, SM2540C, SM4500H-B**
EPA 332: Perchlorate.
Microbiology: **SM9215B; SM9223-P/A, SM9223B-Colilert-QT, Enterolert-QT.**

Non-Potable Water
EPA 200.8: Al,Sb,As,Be,Cd,Cr,Cu,Pb,Mn,Ni,Se,Ag,Tl,Zn;
EPA 200.7: Al,Sb,As,Be,Cd,Ca,Cr,Co,Cu,Fe,Pb,Mg,Mn,Mo,Ni,K,Se,Ag,Na,Sr,Ti,Tl,V,Zn;
EPA 245.1, SM4500H,B, EPA 120.1, SM2510B, SM2540C, SM2340B, SM2320B, SM4500CL-E, SM4500F-BC, SM426C, SM4500NH3-BH, **EPA 350.1**: Ammonia-N, **LACHAT 10-107-06-1-B**: Ammonia-N, **SM4500NO3-F,**
EPA 353.2: Nitrate-N**, SM4500NH3-BC-NES, EPA 351.1, SM4500P-E, SM4500P-B, E, SM5220D, EPA 410.4, SM5210B, SM5310C, SM4500CL-D, EPA 1664, SM14 510AC, EPA 420.1, SM4500-CN-CE, SM2540D.**
EPA 624: Volatile Halocarbons & Aromatics,
EPA 608: Chlordane, Toxaphene, Aldrin, alpha-BHC, beta-BHC, gamma-BHC, delta-BHC, Dieldrin, DDD, DDE, DDT, Endosulfan I, Endosulfan II, Endosulfan sulfate, Endrin, Endrin Aldehyde, Heptachlor, Heptachlor Epoxide, PCBs
EPA 625: SVOC (Acid/Base/Neutral Extractables), **EPA 600/4-81-045**: PCB-Oil.
Microbiology: **SM9223B-Colilert-QT; Enterolert-QT, SM9222D-MF**.

For a complete listing of analytes and methods, please contact your Alpha Project Manager.

CHAIN OF CUSTODY

PAGE 1 OF 1

Date Rec'd in Lab: 7-28-15

ALPHA Job #: L1517568

ALPHA ANALYTICAL
8 Walkup Drive
Westboro, MA 01581
Tel: 508-898-9220

320 Forbes Blvd
Mansfield, MA 02048
Tel: 508-822-9300

Client Information

Client: TRC
Address: 650 SUFFOLK ST
LOWELL MA
Phone: 978-970-5600
Email: DSULLIVAN@TRCSOLUTIONS.COM

Project Information

Project Name: NBHS IRA
Project Location: NEW BEDFORD MA.
Project #: 115058
Project Manager: DAVID SULLIVAN
ALPHA Quote #:

Turn-Around Time

☑ Standard ☐ RUSH (only confirmed if pre-approved!)
5-DAY
Date Due: 8/4/15

Report Information - Data Deliverables

☑ ADEx ☑ EMAIL

Billing Information

☐ Same as Client info PO #: 82341

Regulatory Requirements & Project Information Requirements

☑ Yes ☐ No MA MCP Analytical Methods ☐ Yes ☐ No CT RCP Analytical Methods
☐ Yes ☐ No Matrix Spike Required on this SDG? (Required for MCP Inorganics)
☐ Yes ☐ No GW1 Standards (Info Required for Metals & EPH with Targets)
☐ Yes ☐ No NPDES RGP
☐ Other State /Fed Program _____ Criteria _____

Additional Project Information:

ANALYSIS

VOC: ☑ 8260 ☐ 624 ☐ 524.2
SVOC: ☐ ABN ☐ PAH
METALS: ☐ MCP 13 ☐ MCP 14 ☐ RCP 15
METALS: ☐ RCRA5 ☐ RCRA8 ☐ PP13
EPH: ☐ Ranges & Targets ☐ Ranges Only
VPH: ☐ Ranges & Targets ☐ Ranges Only
☑ PCB ☐ PEST
TPH: ☐ Quant Only ☐ Fingerprint
PCBs FILTERED

SAMPLE INFO
Filtration: ☑ Field ☐ Lab to do
Preservation: ☐ Lab to do

ALPHA Lab ID (Lab Use Only)	Sample ID	Collection Date	Collection Time	Sample Matrix	Sampler Initials	VOC	SVOC	METALS	METALS	EPH	VPH	PCB	TPH	PCBs FILTERED					Sample Comments	TOTAL # BOTTLES
17568-01,02	~~MW-27R~~ MW-42R	7/27/15	11:30	GW	JF	✓						✓		✓						7
03,04	MW-27R	"	12:30	GW	JF	✓						✓		✓						7
05	MW-32	"	12:55	GW	JF	✓						✓								5
06,07	MW-28	"	13:00	GW	CO	✓						✓		✓						7
08,09	MW-41	"	16:30	GW	JF	✓						✓		✓						7
10,11	DUP.	7/27/15	—	GW	JF	✓						✓		✓						7
12	TRIP BLANK			DW		✓														2
					Container Type	V						A		A						
					Preservative	B						A		A						

Container Type
P= Plastic
A= Amber glass
V= Vial
G= Glass
B= Bacteria cup
C= Cube
O= Other
E= Encore
D= BOD Bottle

Preservative
A= None
B= HCl
C= HNO_3
D= H_2SO_4
E= NaOH
F= MeOH
G= $NaHSO_4$
H = $Na_2S_2O_3$
I= Ascorbic Acid
J = NH_4Cl
K= Zn Acetate
O= Other

Relinquished By:	Date/Time	Received By:	Date/Time
Jason C. Ford	7/28/15	[illegible]	7/28/15 1030
[illegible]	7/28/15 1810	[illegible]	7-28-15 1810

All samples submitted are subject to Alpha's Terms and Conditions. See reverse side.

FORM NO: 01-01 (rev. 12-Mar-2012)

7A
Volatile Organics CONTINUING CALIBRATION CHECK

Lab Name: Alpha Analytical Labs

SDG No.: L1517568

Instrument ID: Quimby.i Calibration Date: 01-AUG-2015 Time: 04:23

Lab File ID: 0801A01 Init. Calib. Date(s): 29-JUN-2 30-JUN-2

Sample No: 8260 CCAL Init. Calib. Times : 23:44 02:54

Compound	RRF	RRF	MIN RRF	%D	MAX %D	
dichlorodifluoromethane	.38134	.37509	.1	-2	20	
chloromethane	.44381	.33024	.1	-26	20	F
vinyl chloride	.31826	.27914	.1	-12	20	
bromomethane	.29635	.23884	.1	-19	20	
chloroethane	.24585	.21696	.1	-12	20	
trichlorofluoromethane	.52148	.53409	.1	2	20	
ethyl ether	.16213	.16522	.05	2	20	
acrolein	.03562	.02729	.05	-23	20	F
freon-113	.3082	.3097	.1	0	20	
acetone	.06504	.07168	.1	10	20	F
1,1,-dichloroethene	.31884	.29049	.1	-9	20	
tert-butyl alcohol	.00827	.01228	.05	48	20	F
iodomethane	.26954	.10083	.05	-63	20	F
methyl acetate	.14249	.15529	.01	9	20	
carbon disulfide	.84403	.68984	.1	-18	20	
methylene chloride	.35469	.34265	.1	-3	20	
acrylonitrile	.08287	.08429	.05	2	20	
methyl tert butyl ether	.57985	.56963	.1	-2	20	
Halothane	.23439	.22844	.05	-3	20	
trans-1,2-dichloroethene	.3354	.3152	.1	-6	20	
Diisopropyl Ether	1.1024	.92073	.05	-16	20	
1,1-dichloroethane	.62302	.59323	.2	-5	20	
vinyl acetate	.38294	.31713	.05	-17	20	
Ethyl-Tert-Butyl-Ether	.78612	.70856	.05	-10	20	
2-butanone	.07662	.08451	.1	10	20	F
2,2-dichloropropane	.28458	.26549	.05	-7	20	
ethyl acetate	.17441	.17676	.05	1	20	
cis-1,2-dichloroethene	.37156	.35589	.1	-4	20	
chloroform	.60482	.61628	.2	2	20	
bromochloromethane	.1409	.14335	.05	2	20	
tetrahydrofuran	.0553	.05053	.05	-9	20	
1,1,1-trichloroethane	.46817	.47192	.1	1	20	
cyclohexane	.67385	.65367	.01	-3	30	
1,1-dichloropropene	.47562	.47116	.05	-1	20	
carbontetrachloride	.34644	.34035	.1	-2	20	
Tertiary-Amyl Methyl Ether	.62364	.54584	.05	-12	20	
1,2-dichloroethane	.41052	.43711	.1	6	20	
benzene	1.4738	1.4096	.5	-4	20	

FORM VII MCP-8260-10

7A
CONTINUING CALIBRATION CHECK

Lab Name: Alpha Analytical Labs

SDG No.: L1517568

Instrument ID: Quimby.i Calibration Date: 01-AUG-2015 Time: 04:23

Lab File ID: 0801A01 Init. Calib. Date(s): 29-JUN-2 30-JUN-2

Sample No: 8260 CCAL Init. Calib. Times : 23:44 02:54

Compound	$\overline{RRF}$	RRF	MIN RRF	%D	MAX %D	
trichloroethene	.36239	.34815	.2	-4	20	
methyl cyclohexane	.64661	.68372	.01	6	30	
1,2-dichloropropane	.35819	.33203	.1	-7	20	
bromodichloromethane	.39742	.41651	.2	5	20	
1,4-dioxane	.00169	.00188	.05	11	20	F
dibromomethane	.15519	.16571	.05	7	20	
2-chloroethylvinyl ether	.11752	.06943	.05	-41	20	F
4-methyl-2-pentanone	.0737	.0736	.1	0	20	F
cis-1,3-dichloropropene	100	87.251	.2	-13	20	
toluene	1.1737	1.2085	.4	3	20	
ethyl-methacrylate	.38959	.36147	.01	-7	20	
trans-1,3-dichloropropene	100	91.797	.1	-8	20	
1,1,2-trichloroethane	.25885	.28365	.1	10	20	
2-hexanone	.14629	.15798	.1	8	20	
1,3-dichloropropane	.51247	.56871	.05	11	20	
tetrachloroethene	.44382	.47293	.2	7	20	
chlorodibromomethane	.2785	.31704	.1	14	20	
1,2-dibromoethane	.20925	.25378	.1	21	20	F
chlorobenzene	1.2531	1.3394	.5	7	20	
1,1,1,2-tetrachloroethane	.34609	.38427	.05	11	20	
ethyl benzene	2.2882	2.4974	.1	9	20	
p/m xylene	.88101	.96385	.1	9	20	
o xylene	.84003	.92814	.3	10	20	
styrene	1.3553	1.5242	.31	12	20	
isopropylbenzene	2.3230	2.5343	.1	9	20	
bromoform	.24744	.28557	.1	15	20	
1,4-dichlorobutane	1.0031	1.0074	.01	0	20	
1,1,2,2,-tetrachloroethane	.62421	.68527	.3	10	20	
1,2,3-trichloropropane	.47667	.54563	.05	14	20	
trans-1,4-dichloro-2-butene	.1409	.14171	.05	1	20	
n-propylbenzene	4.9577	5.4565	.05	10	20	
bromobenzene	.88592	.96726	.05	9	20	
4-ethyltoluene	2.1188	2.0540	.05	-3	20	
1,3,5-trimethybenzene	3.6133	4.0579	.05	12	20	
2-chlorotoluene	3.4257	3.7020	.05	8	20	
4-chorotoluene	3.1390	3.4371	.05	9	20	
tert-butylbenzene	3.0511	3.3062	.05	8	20	
1,2,4-trimethylbenzene	3.5953	4.0643	.05	13	20	

FORM VII MCP-8260-10

7A
CONTINUING CALIBRATION CHECK

Lab Name: Alpha Analytical Labs

SDG No.: L1517568

Instrument ID: Quimby.i Calibration Date: 01-AUG-2015 Time: 04:23

Lab File ID: 0801A01 Init. Calib. Date(s): 29-JUN-2 30-JUN-2

Sample No: 8260 CCAL Init. Calib. Times : 23:44 02:54

Compound	$\overline{RRF}$	RRF	MIN RRF	%D	MAX %D
sec-butylbenzene	4.6128	4.9797	.05	8	20
p-isopropyltoluene	3.8608	4.2990	.05	11	20
1,3-dichlorobenzene	1.8744	2.036	.6	9	20
1,4-dichlorobenzene	1.8508	2.0423	.5	10	20
n-butylbenzene	4.2284	4.5841	.05	8	20
p-diethylbenzene	1.1209	1.1161	.05	0	20
1,2-dichlorobenzene	1.6673	1.8781	.4	13	20
1,2,4,5-tetramethylbenezene	1.6346	1.5877	.05	-3	20
1,2-dibromo-3-chloropropane	.07784	.09006	.05	16	20
1,3,5-trichlorobenzene	1.2271	1.3802	.01	12	30
1,2,4-trichlorobenzene	.87994	.97438	.2	11	20
hexachlorobutadiene	.52115	.59063	.05	13	20
naphthalene	1.6096	1.7004	.05	6	20
1,2,3-trichlorobenzene	.73418	.86817	.05	18	20
dibromofluoromethane	.22433	.22044	.05	-2	20
1,2-dichloroethane-d4	.25827	.2792	.05	8	20
toluene-d8	1.2231	1.2651	.05	3	20
4-bromofluorobenzene	.9568	.92258	.05	-4	20

FORM VII MCP-8260-10

INDOOR AIR AND SOIL GAS ANALYTICAL DATA

ANALYTICAL REPORT

Lab Number:	L1514277
Client:	TRC Environmental Consultants Wannalancit Mills 650 Suffolk Street Lowell, MA 01854
ATTN:	David Sullivan
Phone:	(978) 656-3600
Project Name:	NBHS IAQ
Project Number:	115058
Report Date:	06/29/15

The original project report/data package is held by Alpha Analytical. This report/data package is paginated and should be reproduced only in its entirety. Alpha Analytical holds no responsibility for results and/or data that are not consistent with the original.

Certifications & Approvals: NY (11627), CT (PH-0141), NH (2206), NJ NELAP (MA015), RI (LAO00299), ME (MA00030), PA (68-02089), VA (460194), LA NELAP (03090), FL (E87814), TX (T104704419), WA (C954), USFWS (Permit #LE2069641), USDA (Permit #P330-11-00109), US Army Corps of Engineers.

320 Forbes Boulevard, Mansfield, MA 02048-1806
508-822-9300 (Fax) 508-822-3288 800-624-9220 - www.alphalab.com

Project Name: NBHS IAQ
Project Number: 115058

Lab Number: L1514277
Report Date: 06/29/15

Alpha Sample ID	Client ID	Matrix	Sample Location	Collection Date/Time	Receive Date
L1514277-01	TRC-IA-16	AIR	NEW BEDFORD	06/22/15 10:30	06/23/15

Project Name: NBHS IAQ **Lab Number:** L1514277

Project Number: 115058 **Report Date:** 06/29/15

MADEP MCP Response Action Analytical Report Certification

This form provides certifications for all samples performed by MCP methods. Please refer to the Sample Results and Container Information sections of this report for specification of MCP methods used for each analysis. The following questions pertain only to MCP Analytical Methods.

An affirmative response to questions A through F is required for "Presumptive Certainty" status		
A	Were all samples received in a condition consistent with those described on the Chain-of-Custody, properly preserved (including temperature) in the field or laboratory, and prepared/analyzed within method holding times?	YES
B	Were the analytical method(s) and all associated QC requirements specified in the selected CAM protocol(s) followed?	YES
C	Were all required corrective actions and analytical response actions specified in the selected CAM protocol(s) implemented for all identified performance standard non-conformances?	YES
D	Does the laboratory report comply with all the reporting requirements specified in CAM VII A, "Quality Assurance and Quality Control Guidelines for the Acquisition and Reporting of Analytical Data?"	YES
E a.	VPH, EPH, and APH Methods only: Was each method conducted without significant modification(s)? (Refer to the individual method(s) for a list of significant modifications).	N/A
E b.	APH and TO-15 Methods only: Was the complete analyte list reported for each method?	YES
F	Were all applicable CAM protocol QC and performance standard non-conformances identified and evaluated in a laboratory narrative (including all "No" responses to Questions A through E)?	YES

A response to questions G, H and I is required for "Presumptive Certainty" status		
G	Were the reporting limits at or below all CAM reporting limits specified in the selected CAM protocol(s)?	NO
H	Were all QC performance standards specified in the CAM protocol(s) achieved?	YES
I	Were results reported for the complete analyte list specified in the selected CAM protocol(s)?	YES

For any questions answered "No", please refer to the case narrative section on the following page(s).

Please note that sample matrix information is located in the Sample Results section of this report.

Project Name: NBHS IAQ
Project Number: 115058

Lab Number: L1514277
Report Date: 06/29/15

Case Narrative

The samples were received in accordance with the Chain of Custody and no significant deviations were encountered during the preparation or analysis unless otherwise noted. Sample Receipt, Container Information, and the Chain of Custody are located at the back of the report.

Results contained within this report relate only to the samples submitted under this Alpha Lab Number and meet all of the requirements of NELAC, for all NELAC accredited parameters. The data presented in this report is organized by parameter (i.e. VOC, SVOC, etc.). Sample specific Quality Control data (i.e. Surrogate Spike Recovery) is reported at the end of the target analyte list for each individual sample, followed by the Laboratory Batch Quality Control at the end of each parameter. Tentatively Identified Compounds (TICs), if requested, are reported for compounds identified to be present and are not part of the method/program Target Compound List, even if only a subset of the TCL are being reported. If a sample was re-analyzed or re-extracted due to a required quality control corrective action and if both sets of data are reported, the Laboratory ID of the re-analysis or re-extraction is designated with an "R" or "RE", respectively. When multiple Batch Quality Control elements are reported (e.g. more than one LCS), the associated samples for each element are noted in the grey shaded header line of each data table. Any Laboratory Batch, Sample Specific % recovery or RPD value that is outside the listed Acceptance Criteria is bolded in the report. All specific QC information is also incorporated in the Data Usability format of our Data Merger tool where it can be reviewed along with any associated usability implications. Soil/sediments, solids and tissues are reported on a dry weight basis unless otherwise noted. Definitions of all data qualifiers and acronyms used in this report are provided in the Glossary located at the back of the report.

In reference to questions H (CAM) or 4 (RCP) when "NO" is checked, the performance criteria for CAM and RCP methods allow for some quality control failures to occur and still be within method compliance. In these instances the specific failure is not narrated but noted in the associated QC table. The information is also incorporated in the Data Usability format of our Data Merger tool where it can be reviewed along with any associated usability implications.

Please see the associated ADEx data file for a comparison of laboratory reporting limits that were achieved with the regulatory Numerical Standards requested on the Chain of Custody.

HOLD POLICY
For samples submitted on hold, Alpha's policy is to hold samples (with the exception of Air canisters) free of charge for 21 calendar days from the date the project is completed. After 21 calendar days, we will dispose of all samples submitted including those put on hold unless you have contacted your Client Service Representative and made arrangements for Alpha to continue to hold the samples. Air canisters will be disposed after 3 business days from the date the project is completed.

Please contact Client Services at 800-624-9220 with any questions.

Project Name: NBHS IAQ
Project Number: 115058

Lab Number: L1514277
Report Date: 06/29/15

Case Narrative (continued)

MCP Related Narratives

Canisters were released from the laboratory on June 19, 2015. The canister certification data is provided as an addendum.

MCP Volatile Organics in Air

In reference to question G:

One or more of the target analytes did not achieve the requested CAM reporting limits.

Sample L1514277-01 results for Acetone should be considered estimated due to co-elution with a non-target peak.

Sample Receipt

The sample designated TRC-IA-16 (L1514277-01) had a RPD for the pre- and post-flow controller calibration check (21% RPD) that was outside of the control limit (20% RPD). The initial flow rate for the flow controller was 3.2 mL/minute; the final flow rate was 2.6 mL/minute. The final pressure recorded by the laboratory of the associated canister was -12.6 inches of mercury.

I, the undersigned, attest under the pains and penalties of perjury that, to the best of my knowledge and belief and based upon my personal inquiry of those responsible for providing the information contained in this analytical report, such information is accurate and complete. This certificate of analysis is not complete unless this page accompanies any and all pages of this report.

Authorized Signature: Christopher J. Anderson

Title: Technical Director/Representative

Date: 06/29/15

AIR

Project Name: NBHS IAQ
Project Number: 115058

Lab Number: L1514277
Report Date: 06/29/15

SAMPLE RESULTS

Lab ID: L1514277-01
Client ID: TRC-IA-16
Sample Location: NEW BEDFORD
Matrix: Air
Anaytical Method: 101,TO15-SIM
Analytical Date: 06/25/15 08:16
Analyst: RY

Date Collected: 06/22/15 10:30
Date Received: 06/23/15
Field Prep: Not Specified

Parameter	ppbV Results	ppbV RL	ppbV MDL	ug/m3 Results	ug/m3 RL	ug/m3 MDL	Qualifier	Dilution Factor
MCP Volatile Organics in Air by SIM - Mansfield Lab								
Vinyl chloride	ND	0.020	--	ND	0.051	--		1
Bromomethane	ND	0.020	--	ND	0.078	--		1
Acetone	25.2	1.00	--	59.9	2.38	--		1
1,1-Dichloroethene	ND	0.020	--	ND	0.079	--		1
Methylene chloride	1.50	1.40	--	5.21	1.74	--		1
trans-1,2-Dichloroethene	ND	0.020	--	ND	0.079	--		1
1,1-Dichloroethane	ND	0.020	--	ND	0.081	--		1
Methyl tert butyl ether	ND	0.200	--	ND	0.721	--		1
2-Butanone	3.84	0.500	--	11.3	1.47	--		1
cis-1,2-Dichloroethene	ND	0.020	--	ND	0.079	--		1
Chloroform	1.41	0.020	--	6.89	0.098	--		1
1,2-Dichloroethane	ND	0.020	--	ND	0.081	--		1
1,1,1-Trichloroethane	0.253	0.020	--	1.38	0.109	--		1
Benzene	1.17	0.100	--	3.74	0.319	--		1
Carbon tetrachloride	0.059	0.020	--	0.371	0.126	--		1
1,2-Dichloropropane	ND	0.020	--	ND	0.092	--		1
Bromodichloromethane	0.172	0.020	--	1.15	0.134	--		1
1,4-Dioxane	ND	0.100	--	ND	0.360	--		1
Trichloroethene	ND	0.020	--	ND	0.107	--		1
cis-1,3-Dichloropropene	ND	0.020	--	ND	0.091	--		1
4-Methyl-2-pentanone	ND	0.500	--	ND	2.05	--		1
trans-1,3-Dichloropropene	ND	0.020	--	ND	0.091	--		1
1,1,2-Trichloroethane	ND	0.020	--	ND	0.109	--		1
Toluene	8.87	0.050	--	33.4	0.188	--		1

Project Name: NBHS IAQ
Project Number: 115058
Lab Number: L1514277
Report Date: 06/29/15

SAMPLE RESULTS

Lab ID: L1514277-01
Client ID: TRC-IA-16
Sample Location: NEW BEDFORD
Date Collected: 06/22/15 10:30
Date Received: 06/23/15
Field Prep: Not Specified

Parameter	ppbV Results	ppbV RL	ppbV MDL	ug/m3 Results	ug/m3 RL	ug/m3 MDL	Qualifier	Dilution Factor
MCP Volatile Organics in Air by SIM - Mansfield Lab								
Dibromochloromethane	ND	0.020	--	ND	0.170	--		1
1,2-Dibromoethane	ND	0.020	--	ND	0.154	--		1
Tetrachloroethene	0.031	0.020	--	0.210	0.136	--		1
Chlorobenzene	ND	0.020	--	ND	0.092	--		1
Ethylbenzene	0.543	0.020	--	2.36	0.087	--		1
p/m-Xylene	1.95	0.040	--	8.47	0.174	--		1
Bromoform	ND	0.020	--	ND	0.207	--		1
Styrene	0.123	0.020	--	0.524	0.085	--		1
1,1,2,2-Tetrachloroethane	ND	0.020	--	ND	0.137	--		1
o-Xylene	0.624	0.020	--	2.71	0.087	--		1
1,3-Dichlorobenzene	ND	0.020	--	ND	0.120	--		1
1,4-Dichlorobenzene	ND	0.020	--	ND	0.120	--		1
1,2-Dichlorobenzene	ND	0.020	--	ND	0.120	--		1
1,2,4-Trichlorobenzene	ND	0.050	--	ND	0.371	--		1
Naphthalene	0.201	0.050	--	1.05	0.262	--		1
Hexachlorobutadiene	ND	0.050	--	ND	0.533	--		1

Internal Standard	% Recovery	Qualifier	Acceptance Criteria
1,4-difluorobenzene	81		60-140
bromochloromethane	84		60-140
chlorobenzene-d5	80		60-140

Project Name: NBHS IAQ
Project Number: 115058

Lab Number: L1514277
Report Date: 06/29/15

Method Blank Analysis
Batch Quality Control

Analytical Method: 101,TO15-SIM
Analytical Date: 06/24/15 16:11

Parameter	ppbV Results	ppbV RL	ppbV MDL	ug/m3 Results	ug/m3 RL	ug/m3 MDL	Qualifier	Dilution Factor
MCP Volatile Organics in Air by SIM - Mansfield Lab for sample(s): 01 Batch: WG796768-4								
Dichlorodifluoromethane	ND	0.200	--	ND	0.989	--		1
Chloromethane	ND	0.200	--	ND	0.413	--		1
1,2-Dichloro-1,1,2,2-tetrafluoroethane	ND	0.050	--	ND	0.349	--		1
Vinyl chloride	ND	0.020	--	ND	0.051	--		1
1,3-Butadiene	ND	0.020	--	ND	0.044	--		1
Bromomethane	ND	0.020	--	ND	0.078	--		1
Chloroethane	ND	0.020	--	ND	0.053	--		1
Acetone	ND	1.00	--	ND	2.38	--		1
Trichlorofluoromethane	ND	0.050	--	ND	0.281	--		1
Acrylonitrile	ND	0.500	--	ND	1.09	--		1
1,1-Dichloroethene	ND	0.020	--	ND	0.079	--		1
Methylene chloride	ND	0.500	--	ND	1.74	--		1
1,1,2-Trichloro-1,2,2-Trifluoroethane	ND	0.050	--	ND	0.383	--		1
Halothane	ND	0.050	--	ND	0.404	--		1
trans-1,2-Dichloroethene	ND	0.020	--	ND	0.079	--		1
1,1-Dichloroethane	ND	0.020	--	ND	0.081	--		1
Methyl tert butyl ether	ND	0.200	--	ND	0.721	--		1
2-Butanone	ND	0.500	--	ND	1.47	--		1
cis-1,2-Dichloroethene	ND	0.020	--	ND	0.079	--		1
Chloroform	ND	0.020	--	ND	0.098	--		1
1,2-Dichloroethane	ND	0.020	--	ND	0.081	--		1
1,1,1-Trichloroethane	ND	0.020	--	ND	0.109	--		1
Benzene	ND	0.100	--	ND	0.319	--		1
Carbon tetrachloride	ND	0.020	--	ND	0.126	--		1
1,2-Dichloropropane	ND	0.020	--	ND	0.092	--		1

Project Name: NBHS IAQ
Project Number: 115058

Lab Number: L1514277
Report Date: 06/29/15

Method Blank Analysis
Batch Quality Control

Analytical Method: 101,TO15-SIM
Analytical Date: 06/24/15 16:11

Parameter	ppbV Results	ppbV RL	ppbV MDL	ug/m3 Results	ug/m3 RL	ug/m3 MDL	Qualifier	Dilution Factor
MCP Volatile Organics in Air by SIM - Mansfield Lab for sample(s): 01 Batch: WG796768-4								
Bromodichloromethane	ND	0.020	--	ND	0.134	--		1
1,4-Dioxane	ND	0.100	--	ND	0.360	--		1
Trichloroethene	ND	0.020	--	ND	0.107	--		1
cis-1,3-Dichloropropene	ND	0.020	--	ND	0.091	--		1
4-Methyl-2-pentanone	ND	0.500	--	ND	2.05	--		1
trans-1,3-Dichloropropene	ND	0.020	--	ND	0.091	--		1
1,1,2-Trichloroethane	ND	0.020	--	ND	0.109	--		1
Toluene	ND	0.050	--	ND	0.188	--		1
Dibromochloromethane	ND	0.020	--	ND	0.170	--		1
1,2-Dibromoethane	ND	0.020	--	ND	0.154	--		1
Tetrachloroethene	ND	0.020	--	ND	0.136	--		1
1,1,1,2-Tetrachloroethane	ND	0.020	--	ND	0.137	--		1
Chlorobenzene	ND	0.020	--	ND	0.092	--		1
Ethylbenzene	ND	0.020	--	ND	0.087	--		1
p/m-Xylene	ND	0.040	--	ND	0.174	--		1
Bromoform	ND	0.020	--	ND	0.207	--		1
Styrene	ND	0.020	--	ND	0.085	--		1
1,1,2,2-Tetrachloroethane	ND	0.020	--	ND	0.137	--		1
o-Xylene	ND	0.020	--	ND	0.087	--		1
Isopropylbenzene	ND	0.200	--	ND	0.983	--		1
1,3,5-Trimethylbenzene	ND	0.020	--	ND	0.098	--		1
1,2,4-Trimethylbenzene	ND	0.020	--	ND	0.098	--		1
1,3-Dichlorobenzene	ND	0.020	--	ND	0.120	--		1
1,4-Dichlorobenzene	ND	0.020	--	ND	0.120	--		1
sec-Butylbenzene	ND	0.200	--	ND	1.10	--		1

Project Name: NBHS IAQ
Project Number: 115058

Lab Number: L1514277
Report Date: 06/29/15

Method Blank Analysis
Batch Quality Control

Analytical Method: 101,TO15-SIM
Analytical Date: 06/24/15 16:11

Parameter	ppbV Results	ppbV RL	ppbV MDL	ug/m3 Results	ug/m3 RL	ug/m3 MDL	Qualifier	Dilution Factor
MCP Volatile Organics in Air by SIM - Mansfield Lab for sample(s): 01 Batch: WG796768-4								
p-Isopropyltoluene	ND	0.200	--	ND	1.10	--		1
1,2-Dichlorobenzene	ND	0.020	--	ND	0.120	--		1
n-Butylbenzene	ND	0.200	--	ND	1.10	--		1
1,2,4-Trichlorobenzene	ND	0.050	--	ND	0.371	--		1
Naphthalene	ND	0.050	--	ND	0.262	--		1
1,2,3-Trichlorobenzene	ND	0.050	--	ND	0.371	--		1
Hexachlorobutadiene	ND	0.050	--	ND	0.533	--		1

Lab Control Sample Analysis
Batch Quality Control

Project Name: NBHS IAQ
Project Number: 115058

Lab Number: L1514277
Report Date: 06/29/15

Parameter	LCS %Recovery	Qual	LCSD %Recovery	Qual	%Recovery Limits	RPD	Qual	RPD Limits
MCP Volatile Organics in Air by SIM - Mansfield Lab Associated sample(s): 01 Batch: WG796768-3								
Dichlorodifluoromethane	79		-		70-130	-		
Chloromethane	85		-		70-130	-		
1,2-Dichloro-1,1,2,2-tetrafluoroethane	90		-		70-130	-		
Vinyl chloride	88		-		70-130	-		
1,3-Butadiene	92		-		70-130	-		
Bromomethane	88		-		70-130	-		
Chloroethane	83		-		70-130	-		
Acetone	90		-		50-150	-		
Trichlorofluoromethane	90		-		70-130	-		
1,1-Dichloroethene	88		-		70-130	-		
Methylene chloride	90		-		70-130	-		
1,1,2-Trichloro-1,2,2-Trifluoroethane	92		-		70-130	-		
Halothane	110		-		70-130	-		
trans-1,2-Dichloroethene	83		-		70-130	-		
1,1-Dichloroethane	91		-		70-130	-		
Methyl tert butyl ether	90		-		70-130	-		
2-Butanone	90		-		70-130	-		
cis-1,2-Dichloroethene	98		-		70-130	-		
Chloroform	94		-		70-130	-		
1,2-Dichloroethane	89		-		70-130	-		
1,1,1-Trichloroethane	86		-		70-130	-		

Lab Control Sample Analysis
Batch Quality Control

Project Name: NBHS IAQ
Project Number: 115058

Lab Number: L1514277
Report Date: 06/29/15

Parameter	LCS %Recovery	Qual	LCSD %Recovery	Qual	%Recovery Limits	RPD	Qual	RPD Limits
MCP Volatile Organics in Air by SIM - Mansfield Lab Associated sample(s): 01 Batch: WG796768-3								
Benzene	88		-		70-130	-		
Carbon tetrachloride	90		-		70-130	-		
1,2-Dichloropropane	90		-		70-130	-		
Bromodichloromethane	88		-		70-130	-		
1,4-Dioxane	93		-		50-150	-		
Trichloroethene	90		-		70-130	-		
cis-1,3-Dichloropropene	96		-		70-130	-		
4-Methyl-2-pentanone	95		-		70-130	-		
trans-1,3-Dichloropropene	84		-		70-130	-		
1,1,2-Trichloroethane	94		-		70-130	-		
Toluene	95		-		70-130	-		
Dibromochloromethane	93		-		70-130	-		
1,2-Dibromoethane	100		-		70-130	-		
Tetrachloroethene	97		-		70-130	-		
Chlorobenzene	99		-		70-130	-		
Ethylbenzene	97		-		70-130	-		
p/m-Xylene	98		-		70-130	-		
Bromoform	94		-		70-130	-		
Styrene	103		-		70-130	-		
1,1,2,2-Tetrachloroethane	102		-		70-130	-		
o-Xylene	99		-		70-130	-		

Lab Control Sample Analysis
Batch Quality Control

Project Name: NBHS IAQ
Project Number: 115058

Lab Number: L1514277
Report Date: 06/29/15

Parameter	LCS %Recovery	Qual	LCSD %Recovery	Qual	%Recovery Limits	RPD	Qual	RPD Limits
MCP Volatile Organics in Air by SIM - Mansfield Lab Associated sample(s): 01 Batch: WG796768-3								
1,3,5-Trimethylbenzene	97		-		70-130	-		
1,2,4-Trimethylbenzene	103		-		70-130	-		
1,3-Dichlorobenzene	108		-		70-130	-		
1,4-Dichlorobenzene	105		-		70-130	-		
1,2-Dichlorobenzene	106		-		70-130	-		
1,2,4-Trichlorobenzene	126		-		50-150	-		
Naphthalene	126		-		50-150	-		
1,2,3-Trichlorobenzene	124		-		70-130	-		
Hexachlorobutadiene	116		-		50-150	-		

Project Name: NBHS IAQ

Lab Number: L1514277

Project Number: 115058

Report Date: 06/29/15

Canister and Flow Controller Information

Samplenum	Client ID	Media ID	Media Type	Date Prepared	Bottle Order	Cleaning Batch ID	Can Leak Check	Initial Pressure (in. Hg)	Pressure on Receipt (in. Hg)	Flow Controler Leak Chk	Flow Out mL/min	Flow In mL/min	% RPD
L1514277-01	TRC-IA-16	0364	#16 AMB	06/19/15	205423		-	-	-	Pass	3.2	2.6	21
L1514277-01	TRC-IA-16	774	6.0L Can	06/19/15	205423	L1509822-01	Pass	-29.8	-12.6	-	-	-	-

Project Name:

Project Number: CANISTER QC BAT

Lab Number: L1509822

Report Date: 06/29/15

Air Canister Certification Results

Lab ID:	L1509822-01	Date Collected:	05/07/15 11:00
Client ID:	CAN 594 SHELF 48	Date Received:	05/07/15
Sample Location:		Field Prep:	Not Specified
Matrix:	Air		
Anaytical Method:	48,TO-15		
Analytical Date:	05/09/15 17:01		
Analyst:	MR		

	ppbV			ug/m3				
Parameter	**Results**	**RL**	**MDL**	**Results**	**RL**	**MDL**	**Qualifier**	**Dilution Factor**
Volatile Organics in Air - Mansfield Lab								
Chlorodifluoromethane	ND	0.200	--	ND	0.707	--		1
Propylene	ND	0.500	--	ND	0.861	--		1
Propane	ND	0.500	--	ND	0.902	--		1
Dichlorodifluoromethane	ND	0.200	--	ND	0.989	--		1
Chloromethane	ND	0.200	--	ND	0.413	--		1
1,2-Dichloro-1,1,2,2-tetrafluoroethane	ND	0.200	--	ND	1.40	--		1
Methanol	ND	5.00	--	ND	6.55	--		1
Vinyl chloride	ND	0.200	--	ND	0.511	--		1
1,3-Butadiene	ND	0.200	--	ND	0.442	--		1
Butane	ND	0.200	--	ND	0.475	--		1
Bromomethane	ND	0.200	--	ND	0.777	--		1
Chloroethane	ND	0.200	--	ND	0.528	--		1
Ethyl Alcohol	ND	2.50	--	ND	4.71	--		1
Dichlorofluoromethane	ND	0.200	--	ND	0.842	--		1
Vinyl bromide	ND	0.200	--	ND	0.874	--		1
Acrolein	ND	0.500	--	ND	1.15	--		1
Acetone	ND	1.00	--	ND	2.38	--		1
Acetonitrile	ND	0.200	--	ND	0.336	--		1
Trichlorofluoromethane	ND	0.200	--	ND	1.12	--		1
iso-Propyl Alcohol	ND	0.500	--	ND	1.23	--		1
Acrylonitrile	ND	0.500	--	ND	1.09	--		1
Pentane	ND	0.200	--	ND	0.590	--		1
Ethyl ether	ND	0.200	--	ND	0.606	--		1
1,1-Dichloroethene	ND	0.200	--	ND	0.793	--		1
tert-Butyl Alcohol	ND	0.500	--	ND	1.52	--		1

Project Name:

Project Number: CANISTER QC BAT

Lab Number: L1509822

Report Date: 06/29/15

Air Canister Certification Results

Lab ID: L1509822-01
Client ID: CAN 594 SHELF 48
Sample Location:

Date Collected: 05/07/15 11:00
Date Received: 05/07/15
Field Prep: Not Specified

Parameter	ppbV Results	ppbV RL	ppbV MDL	ug/m3 Results	ug/m3 RL	ug/m3 MDL	Qualifier	Dilution Factor
Volatile Organics in Air - Mansfield Lab								
Methylene chloride	ND	0.500	--	ND	1.74	--		1
3-Chloropropene	ND	0.200	--	ND	0.626	--		1
Carbon disulfide	ND	0.200	--	ND	0.623	--		1
1,1,2-Trichloro-1,2,2-Trifluoroethane	ND	0.200	--	ND	1.53	--		1
trans-1,2-Dichloroethene	ND	0.200	--	ND	0.793	--		1
1,1-Dichloroethane	ND	0.200	--	ND	0.809	--		1
Methyl tert butyl ether	ND	0.200	--	ND	0.721	--		1
Vinyl acetate	ND	0.200	--	ND	0.704	--		1
2-Butanone	ND	0.500	--	ND	1.47	--		1
cis-1,2-Dichloroethene	ND	0.200	--	ND	0.793	--		1
Ethyl Acetate	ND	0.500	--	ND	1.80	--		1
Chloroform	ND	0.200	--	ND	0.977	--		1
Tetrahydrofuran	ND	0.500	--	ND	1.47	--		1
2,2-Dichloropropane	ND	0.200	--	ND	0.924	--		1
1,2-Dichloroethane	ND	0.200	--	ND	0.809	--		1
n-Hexane	ND	0.200	--	ND	0.705	--		1
Isopropyl Ether	ND	0.200	--	ND	0.836	--		1
Ethyl-Tert-Butyl-Ether	ND	0.200	--	ND	0.836	--		1
1,1,1-Trichloroethane	ND	0.200	--	ND	1.09	--		1
1,1-Dichloropropene	ND	0.200	--	ND	0.908	--		1
Benzene	ND	0.200	--	ND	0.639	--		1
Carbon tetrachloride	ND	0.200	--	ND	1.26	--		1
Cyclohexane	ND	0.200	--	ND	0.688	--		1
Tertiary-Amyl Methyl Ether	ND	0.200	--	ND	0.836	--		1
Dibromomethane	ND	0.200	--	ND	1.42	--		1
1,2-Dichloropropane	ND	0.200	--	ND	0.924	--		1
Bromodichloromethane	ND	0.200	--	ND	1.34	--		1
1,4-Dioxane	ND	0.200	--	ND	0.721	--		1

Project Name:

Project Number: CANISTER QC BAT

Lab Number: L1509822

Report Date: 06/29/15

Air Canister Certification Results

Lab ID: L1509822-01
Client ID: CAN 594 SHELF 48
Sample Location:

Date Collected: 05/07/15 11:00
Date Received: 05/07/15
Field Prep: Not Specified

Parameter	ppbV Results	ppbV RL	ppbV MDL	ug/m3 Results	ug/m3 RL	ug/m3 MDL	Qualifier	Dilution Factor
Volatile Organics in Air - Mansfield Lab								
Trichloroethene	ND	0.200	--	ND	1.07	--		1
2,2,4-Trimethylpentane	ND	0.200	--	ND	0.934	--		1
Methyl Methacrylate	ND	0.500	--	ND	2.05	--		1
Heptane	ND	0.200	--	ND	0.820	--		1
cis-1,3-Dichloropropene	ND	0.200	--	ND	0.908	--		1
4-Methyl-2-pentanone	ND	0.500	--	ND	2.05	--		1
trans-1,3-Dichloropropene	ND	0.200	--	ND	0.908	--		1
1,1,2-Trichloroethane	ND	0.200	--	ND	1.09	--		1
Toluene	ND	0.200	--	ND	0.754	--		1
1,3-Dichloropropane	ND	0.200	--	ND	0.924	--		1
2-Hexanone	ND	0.200	--	ND	0.820	--		1
Dibromochloromethane	ND	0.200	--	ND	1.70	--		1
1,2-Dibromoethane	ND	0.200	--	ND	1.54	--		1
Butyl Acetate	ND	0.500	--	ND	2.38	--		1
Octane	ND	0.200	--	ND	0.934	--		1
Tetrachloroethene	ND	0.200	--	ND	1.36	--		1
1,1,1,2-Tetrachloroethane	ND	0.200	--	ND	1.37	--		1
Chlorobenzene	ND	0.200	--	ND	0.921	--		1
Ethylbenzene	ND	0.200	--	ND	0.869	--		1
p/m-Xylene	ND	0.400	--	ND	1.74	--		1
Bromoform	ND	0.200	--	ND	2.07	--		1
Styrene	ND	0.200	--	ND	0.852	--		1
1,1,2,2-Tetrachloroethane	ND	0.200	--	ND	1.37	--		1
o-Xylene	ND	0.200	--	ND	0.869	--		1
1,2,3-Trichloropropane	ND	0.200	--	ND	1.21	--		1
Nonane (C9)	ND	0.200	--	ND	1.05	--		1
Isopropylbenzene	ND	0.200	--	ND	0.983	--		1
Bromobenzene	ND	0.200	--	ND	0.793	--		1

Project Name:

Project Number: CANISTER QC BAT

Lab Number: L1509822

Report Date: 06/29/15

Air Canister Certification Results

Lab ID: L1509822-01
Client ID: CAN 594 SHELF 48
Sample Location:

Date Collected: 05/07/15 11:00
Date Received: 05/07/15
Field Prep: Not Specified

Parameter	ppbV Results	ppbV RL	ppbV MDL	ug/m3 Results	ug/m3 RL	ug/m3 MDL	Qualifier	Dilution Factor
Volatile Organics in Air - Mansfield Lab								
o-Chlorotoluene	ND	0.200	--	ND	1.04	--		1
n-Propylbenzene	ND	0.200	--	ND	0.983	--		1
p-Chlorotoluene	ND	0.200	--	ND	1.04	--		1
4-Ethyltoluene	ND	0.200	--	ND	0.983	--		1
1,3,5-Trimethylbenzene	ND	0.200	--	ND	0.983	--		1
tert-Butylbenzene	ND	0.200	--	ND	1.10	--		1
1,2,4-Trimethylbenzene	ND	0.200	--	ND	0.983	--		1
Decane (C10)	ND	0.200	--	ND	1.16	--		1
Benzyl chloride	ND	0.200	--	ND	1.04	--		1
1,3-Dichlorobenzene	ND	0.200	--	ND	1.20	--		1
1,4-Dichlorobenzene	ND	0.200	--	ND	1.20	--		1
sec-Butylbenzene	ND	0.200	--	ND	1.10	--		1
p-Isopropyltoluene	ND	0.200	--	ND	1.10	--		1
1,2-Dichlorobenzene	ND	0.200	--	ND	1.20	--		1
n-Butylbenzene	ND	0.200	--	ND	1.10	--		1
1,2-Dibromo-3-chloropropane	ND	0.200	--	ND	1.93	--		1
Undecane	ND	0.200	--	ND	1.28	--		1
Dodecane (C12)	ND	0.200	--	ND	1.39	--		1
1,2,4-Trichlorobenzene	ND	0.200	--	ND	1.48	--		1
Naphthalene	ND	0.200	--	ND	1.05	--		1
1,2,3-Trichlorobenzene	ND	0.200	--	ND	1.48	--		1
Hexachlorobutadiene	ND	0.200	--	ND	2.13	--		1

	Results	Qualifier	Units	RDL	Dilution Factor
Tentatively Identified Compounds					
No Tentatively Identified Compounds					

Project Name:

Project Number: CANISTER QC BAT

Lab Number: L1509822

Report Date: 06/29/15

Air Canister Certification Results

Lab ID:	L1509822-01	Date Collected:	05/07/15 11:00
Client ID:	CAN 594 SHELF 48	Date Received:	05/07/15
Sample Location:		Field Prep:	Not Specified

	ppbV			ug/m3				
Parameter	**Results**	**RL**	**MDL**	**Results**	**RL**	**MDL**	**Qualifier**	**Dilution Factor**
Volatile Organics in Air - Mansfield Lab								

Internal Standard	**% Recovery**	**Qualifier**	**Acceptance Criteria**
1,4-Difluorobenzene	91		60-140
Bromochloromethane	86		60-140
chlorobenzene-d5	89		60-140

Project Name:

Project Number: CANISTER QC BAT

Lab Number: L1509822

Report Date: 06/29/15

Air Canister Certification Results

Lab ID:	L1509822-01	Date Collected:	05/07/15 11:00
Client ID:	CAN 594 SHELF 48	Date Received:	05/07/15
Sample Location:		Field Prep:	Not Specified
Matrix:	Air		
Anaytical Method:	48,TO-15-SIM		
Analytical Date:	05/09/15 17:01		
Analyst:	MR		

	ppbV			ug/m3				
Parameter	**Results**	**RL**	**MDL**	**Results**	**RL**	**MDL**	**Qualifier**	**Dilution Factor**
Volatile Organics in Air by SIM - Mansfield Lab								
Dichlorodifluoromethane	ND	0.200	--	ND	0.989	--		1
Chloromethane	ND	0.200	--	ND	0.413	--		1
1,2-Dichloro-1,1,2,2-tetrafluoroethane	ND	0.050	--	ND	0.349	--		1
Vinyl chloride	ND	0.020	--	ND	0.051	--		1
1,3-Butadiene	ND	0.020	--	ND	0.044	--		1
Bromomethane	ND	0.020	--	ND	0.078	--		1
Chloroethane	ND	0.020	--	ND	0.053	--		1
Acetone	ND	1.00	--	ND	2.38	--		1
Trichlorofluoromethane	ND	0.050	--	ND	0.281	--		1
Acrylonitrile	ND	0.500	--	ND	1.09	--		1
1,1-Dichloroethene	ND	0.020	--	ND	0.079	--		1
Methylene chloride	ND	0.500	--	ND	1.74	--		1
1,1,2-Trichloro-1,2,2-Trifluoroethane	ND	0.050	--	ND	0.383	--		1
Halothane	ND	0.050	--	ND	0.404	--		1
trans-1,2-Dichloroethene	ND	0.020	--	ND	0.079	--		1
1,1-Dichloroethane	ND	0.020	--	ND	0.081	--		1
Methyl tert butyl ether	ND	0.020	--	ND	0.072	--		1
2-Butanone	ND	0.500	--	ND	1.47	--		1
cis-1,2-Dichloroethene	ND	0.020	--	ND	0.079	--		1
Chloroform	ND	0.020	--	ND	0.098	--		1
1,2-Dichloroethane	ND	0.020	--	ND	0.081	--		1
1,1,1-Trichloroethane	ND	0.020	--	ND	0.109	--		1
Benzene	ND	0.100	--	ND	0.319	--		1
Carbon tetrachloride	ND	0.020	--	ND	0.126	--		1
1,2-Dichloropropane	ND	0.020	--	ND	0.092	--		1

Project Name:

Project Number: CANISTER QC BAT

Lab Number: L1509822

Report Date: 06/29/15

Air Canister Certification Results

Lab ID: L1509822-01
Client ID: CAN 594 SHELF 48
Sample Location:

Date Collected: 05/07/15 11:00
Date Received: 05/07/15
Field Prep: Not Specified

Parameter	ppbV Results	ppbV RL	ppbV MDL	ug/m3 Results	ug/m3 RL	ug/m3 MDL	Qualifier	Dilution Factor
Volatile Organics in Air by SIM - Mansfield Lab								
Bromodichloromethane	ND	0.020	--	ND	0.134	--		1
1,4-Dioxane	ND	0.100	--	ND	0.360	--		1
Trichloroethene	ND	0.020	--	ND	0.107	--		1
cis-1,3-Dichloropropene	ND	0.020	--	ND	0.091	--		1
4-Methyl-2-pentanone	ND	0.500	--	ND	2.05	--		1
trans-1,3-Dichloropropene	ND	0.020	--	ND	0.091	--		1
1,1,2-Trichloroethane	ND	0.020	--	ND	0.109	--		1
Toluene	ND	0.050	--	ND	0.188	--		1
Dibromochloromethane	ND	0.020	--	ND	0.170	--		1
1,2-Dibromoethane	ND	0.020	--	ND	0.154	--		1
Tetrachloroethene	ND	0.020	--	ND	0.136	--		1
1,1,1,2-Tetrachloroethane	ND	0.020	--	ND	0.137	--		1
Chlorobenzene	ND	0.020	--	ND	0.092	--		1
Ethylbenzene	ND	0.020	--	ND	0.087	--		1
p/m-Xylene	ND	0.040	--	ND	0.174	--		1
Bromoform	ND	0.020	--	ND	0.207	--		1
Styrene	ND	0.020	--	ND	0.085	--		1
1,1,2,2-Tetrachloroethane	ND	0.020	--	ND	0.137	--		1
o-Xylene	ND	0.020	--	ND	0.087	--		1
Isopropylbenzene	ND	0.200	--	ND	0.983	--		1
4-Ethyltoluene	ND	0.020	--	ND	0.098	--		1
1,3,5-Trimethylbenzene	ND	0.020	--	ND	0.098	--		1
1,2,4-Trimethylbenzene	ND	0.020	--	ND	0.098	--		1
1,3-Dichlorobenzene	ND	0.020	--	ND	0.120	--		1
1,4-Dichlorobenzene	ND	0.020	--	ND	0.120	--		1
sec-Butylbenzene	ND	0.200	--	ND	1.10	--		1
p-Isopropyltoluene	ND	0.200	--	ND	1.10	--		1
1,2-Dichlorobenzene	ND	0.020	--	ND	0.120	--		1

Project Name:

Project Number: CANISTER QC BAT

Lab Number: L1509822

Report Date: 06/29/15

Air Canister Certification Results

Lab ID: L1509822-01
Client ID: CAN 594 SHELF 48
Sample Location:

Date Collected: 05/07/15 11:00
Date Received: 05/07/15
Field Prep: Not Specified

Parameter	ppbV Results	ppbV RL	ppbV MDL	ug/m3 Results	ug/m3 RL	ug/m3 MDL	Qualifier	Dilution Factor
Volatile Organics in Air by SIM - Mansfield Lab								
n-Butylbenzene	ND	0.200	--	ND	1.10	--		1
1,2,4-Trichlorobenzene	ND	0.050	--	ND	0.371	--		1
Naphthalene	ND	0.050	--	ND	0.262	--		1
1,2,3-Trichlorobenzene	ND	0.050	--	ND	0.371	--		1
Hexachlorobutadiene	ND	0.050	--	ND	0.533	--		1

Internal Standard	% Recovery	Qualifier	Acceptance Criteria
1,4-difluorobenzene	91		60-140
bromochloromethane	87		60-140
chlorobenzene-d5	88		60-140

Project Name: NBHS IAQ
Project Number: 115058

Lab Number: L1514277
Report Date: 06/29/15

Sample Receipt and Container Information

Were project specific reporting limits specified? YES

Reagent H2O Preserved Vials Frozen on: NA

Cooler Information **Custody Seal**

Cooler	
N/A	Absent

Container Information

Container ID	Container Type	Cooler	pH	Temp deg C	Pres	Seal	Analysis(*)
L1514277-01A	Canister - 6 Liter	N/A	N/A		Y	Absent	MCP-TO15-SIM(30)

*Values in parentheses indicate holding time in days

Project Name: NBHS IAQ
Project Number: 115058
Lab Number: L1514277
Report Date: 06/29/15

GLOSSARY

Acronyms

EDL	- Estimated Detection Limit: This value represents the level to which target analyte concentrations are reported as estimated values, when those target analyte concentrations are quantified below the reporting limit (RL). The EDL includes any adjustments from dilutions, concentrations or moisture content, where applicable. The use of EDLs is specific to the analysis of PAHs using Solid-Phase Microextraction (SPME).
EPA	- Environmental Protection Agency.
LCS	- Laboratory Control Sample: A sample matrix, free from the analytes of interest, spiked with verified known amounts of analytes or a material containing known and verified amounts of analytes.
LCSD	- Laboratory Control Sample Duplicate: Refer to LCS.
LFB	- Laboratory Fortified Blank: A sample matrix, free from the analytes of interest, spiked with verified known amounts of analytes or a material containing known and verified amounts of analytes.
MDL	- Method Detection Limit: This value represents the level to which target analyte concentrations are reported as estimated values, when those target analyte concentrations are quantified below the reporting limit (RL). The MDL includes any adjustments from dilutions, concentrations or moisture content, where applicable.
MS	- Matrix Spike Sample: A sample prepared by adding a known mass of target analyte to a specified amount of matrix sample for which an independent estimate of target analyte concentration is available.
MSD	- Matrix Spike Sample Duplicate: Refer to MS.
NA	- Not Applicable.
NC	- Not Calculated: Term is utilized when one or more of the results utilized in the calculation are non-detect at the parameter's reporting unit.
NI	- Not Ignitable.
NP	- Non-Plastic: Term is utilized for the analysis of Atterberg Limits in soil.
RL	- Reporting Limit: The value at which an instrument can accurately measure an analyte at a specific concentration. The RL includes any adjustments from dilutions, concentrations or moisture content, where applicable.
RPD	- Relative Percent Difference: The results from matrix and/or matrix spike duplicates are primarily designed to assess the precision of analytical results in a given matrix and are expressed as relative percent difference (RPD). Values which are less than five times the reporting limit for any individual parameter are evaluated by utilizing the absolute difference between the values; although the RPD value will be provided in the report.
SRM	- Standard Reference Material: A reference sample of a known or certified value that is of the same or similar matrix as the associated field samples.
TIC	- Tentatively Identified Compound: A compound that has been identified to be present and is not part of the target compound list (TCL) for the method and/or program. All TICs are qualitatively identified and reported as estimated concentrations.

Footnotes

1	- The reference for this analyte should be considered modified since this analyte is absent from the target analyte list of the original method.

Terms

Total: With respect to Organic analyses, a 'Total' result is defined as the summation of results for individual isomers or Aroclors. If a 'Total' result is requested, the results of its individual components will also be reported. This is applicable to 'Total' results for methods 8260, 8081 and 8082.

Analytical Method: Both the document from which the method originates and the analytical reference method. (Example: EPA 8260B is shown as 1,8260B.) The codes for the reference method documents are provided in the References section of the Addendum.

Data Qualifiers

A	- Spectra identified as "Aldol Condensation Product".
B	- The analyte was detected above the reporting limit in the associated method blank. Flag only applies to associated field samples that have detectable concentrations of the analyte at less than ten times (10x) the concentration found in the blank. For MCP-related projects, flag only applies to associated field samples that have detectable concentrations of the analyte at less than ten times (10x) the concentration found in the blank. For DOD-related projects, flag only applies to associated field samples that have detectable concentrations of the analyte at less than ten times (10x) the concentration found in the blank AND the analyte was detected above one-half the reporting limit (or above the reporting limit for common lab contaminants) in the associated method blank. For NJ-Air-related projects, flag only applies to associated field samples that have detectable concentrations of the analyte above the reporting limit. For NJ-related projects (excluding Air), flag only applies to associated field samples that have detectable concentrations of the analyte, which was detected above the reporting limit in the associated method blank or above five times the reporting limit for common lab contaminants (Phthalates, Acetone, Methylene Chloride, 2-Butanone).
C	- Co-elution: The target analyte co-elutes with a known lab standard (i.e. surrogate, internal standards, etc.) for co-extracted analyses.

Report Format: Data Usability Report

Project Name: NBHS IAQ **Lab Number:** L1514277

Project Number: 115058 **Report Date:** 06/29/15

Data Qualifiers

D - Concentration of analyte was quantified from diluted analysis. Flag only applies to field samples that have detectable concentrations of the analyte.

E - Concentration of analyte exceeds the range of the calibration curve and/or linear range of the instrument.

G - The concentration may be biased high due to matrix interferences (i.e, co-elution) with non-target compound(s). The result should be considered estimated.

H - The analysis of pH was performed beyond the regulatory-required holding time of 15 minutes from the time of sample collection.

I - The lower value for the two columns has been reported due to obvious interference.

M - Reporting Limit (RL) exceeds the MCP CAM Reporting Limit for this analyte.

NJ - Presumptive evidence of compound. This represents an estimated concentration for Tentatively Identified Compounds (TICs), where the identification is based on a mass spectral library search.

P - The RPD between the results for the two columns exceeds the method-specified criteria.

Q - The quality control sample exceeds the associated acceptance criteria. For DOD-related projects, LCS and/or Continuing Calibration Standard exceedences are also qualified on all associated sample results. Note: This flag is not applicable for matrix spike recoveries when the sample concentration is greater than 4x the spike added or for batch duplicate RPD when the sample concentrations are less than 5x the RL. (Metals only.)

R - Analytical results are from sample re-analysis.

RE - Analytical results are from sample re-extraction.

S - Analytical results are from modified screening analysis.

J - Estimated value. This represents an estimated concentration for Tentatively Identified Compounds (TICs).

ND - Not detected at the reporting limit (RL) for the sample.

Report Format: Data Usability Report

Project Name: NBHS IAQ
Project Number: 115058
Lab Number: L1514277
Report Date: 06/29/15

REFERENCES

101 Compendium of Methods for the Determination of Toxic Organic Compounds in Ambient Air (EPA/625/R-96/010b:January 1999) with QC Requirements & Performance Standards for the Analysis of TO-15 under the Massachusetts Contingency Plan, WSC-CAM-IXB, July 2010.

LIMITATION OF LIABILITIES

Alpha Analytical performs services with reasonable care and diligence normal to the analytical testing laboratory industry. In the event of an error, the sole and exclusive responsibility of Alpha Analytical shall be to re-perform the work at it's own expense. In no event shall Alpha Analytical be held liable for any incidental, consequential or special damages, including but not limited to, damages in any way connected with the use of, interpretation of, information or analysis provided by Alpha Analytical.

We strongly urge our clients to comply with EPA protocol regarding sample volume, preservation, cooling, containers, sampling procedures, holding time and splitting of samples in the field.

Certification Information

Last revised December 16, 2014

The following analytes are not included in our NELAP Scope of Accreditation:

Westborough Facility
EPA 524.2: Acetone, 2-Butanone (Methyl ethyl ketone (MEK)), Tert-butyl alcohol, 2-Hexanone, Tetrahydrofuran, 1,3,5-Trichlorobenzene, 4-Methyl-2-pentanone (MIBK), Carbon disulfide, Diethyl ether.
EPA 8260C: 1,2,4,5-Tetramethylbenzene, 4-Ethyltoluene, Iodomethane (methyl iodide), Methyl methacrylate, Azobenzene.
EPA 8270D: 1-Methylnaphthalene, Dimethylnaphthalene,1,4-Diphenylhydrazine.
EPA 625: 4-Chloroaniline, 4-Methylphenol.
SM4500: Soil: Total Phosphorus, TKN, NO2, NO3.
EPA 9071: Total Petroleum Hydrocarbons, Oil & Grease.

Mansfield Facility
EPA 8270D: Biphenyl.
EPA 2540D: TSS
EPA TO-15: Halothane, 2,4,4-Trimethyl-2-pentene, 2,4,4-Trimethyl-1-pentene, Thiophene, 2-Methylthiophene, 3-Methylthiophene, 2-Ethylthiophene, 1,2,3-Trimethylbenzene, Indan, Indene, 1,2,4,5-Tetramethylbenzene, Benzothiophene, 1-Methylnaphthalene.

The following analytes are included in our Massachusetts DEP Scope of Accreditation, Westborough Facility:

Drinking Water
EPA 200.8: Sb,As,Ba,Be,Cd,Cr,Cu,Pb,Ni,Se,Tl; **EPA 200.7**: Ba,Be,Ca,Cd,Cr,Cu,Na; **EPA 245.1:** Mercury;
EPA 300.0: Nitrate-N, Fluoride, Sulfate; **EPA 353.2**: Nitrate-N, Nitrite-N; **SM4500NO3-F**: Nitrate-N, Nitrite-N; **SM4500F-C, SM4500CN-CE, EPA 180.1, SM2130B, SM4500Cl-D, SM2320B, SM2540C, SM4500H-B**
EPA 332: Perchlorate.
Microbiology: **SM9215B; SM9223-P/A, SM9223B-Colilert-QT, Enterolert-QT.**

Non-Potable Water
EPA 200.8: Al,Sb,As,Be,Cd,Cr,Cu,Pb,Mn,Ni,Se,Ag,Tl,Zn;
EPA 200.7: Al,Sb,As,Be,Cd,Ca,Cr,Co,Cu,Fe,Pb,Mg,Mn,Mo,Ni,K,Se,Ag,Na,Sr,Ti,Tl,V,Zn;
EPA 245.1, SM4500H,B, EPA 120.1, SM2510B, SM2540C, SM2340B, SM2320B, SM4500CL-E, SM4500F-BC, SM426C, SM4500NH3-BH, **EPA 350.1**: Ammonia-N, **LACHAT 10-107-06-1-B**: Ammonia-N, **SM4500NO3-F,**
EPA 353.2: Nitrate-N**, SM4500NH3-BC-NES, EPA 351.1, SM4500P-E, SM4500P-B, E, SM5220D, EPA 410.4, SM5210B, SM5310C, SM4500CL-D, EPA 1664, SM14 510AC, EPA 420.1, SM4500-CN-CE, SM2540D.**
EPA 624: Volatile Halocarbons & Aromatics,
EPA 608: Chlordane, Toxaphene, Aldrin, alpha-BHC, beta-BHC, gamma-BHC, delta-BHC, Dieldrin, DDD, DDE, DDT, Endosulfan I, Endosulfan II, Endosulfan sulfate, Endrin, Endrin Aldehyde, Heptachlor, Heptachlor Epoxide, PCBs
EPA 625: SVOC (Acid/Base/Neutral Extractables), **EPA 600/4-81-045**: PCB-Oil.
Microbiology: **SM9223B-Colilert-QT; Enterolert-QT, SM9222D-MF**.

For a complete listing of analytes and methods, please contact your Alpha Project Manager.

Serial_No:06291508:56

AIR ANALYSIS

CHAIN OF CUSTODY

PAGE 1 OF 1

Date Rec'd in Lab: 6/23/15

ALPHA Job #: ~~205423~~ L1514277

ALPHA ANALYTICAL
320 Forbes Blvd, Mansfield, MA 02048
TEL: 508-822-9300 FAX: 508-822-3288

Client Information

Client: TRC
Address: 650 Suffolk st
Lowell MA 01854
Phone: 978 970 5600
Fax: —
Email: MOliveira@TRCsolutions.com
☒ These samples have been previously analyzed by Alpha

Project Information

Project Name: NBHS IAQ
Project Location: New Bedford
Project #: 115058/1920/80
Project Manager: Dave Sullivan
ALPHA Quote #:

Turn-Around Time

☒ Standard ☐ RUSH (only confirmed if pre-approved!)
Date Due: Time:

Report Information - Data Deliverables

☐ FAX
☐ ADEx
Criteria Checker:
(Default based on Regulatory Criteria Indicated)
Other Formats:
☒ EMAIL (standard pdf report)
☐ Additional Deliverables:
Report to: (if different than Project Manager)

Billing Information

☐ Same as Client info PO #:

Regulatory Requirements/Report Limits

State/Fed	Program	Criteria
MA	MCP	MCP

Other Project Specific Requirements/Comments:

All Columns Below Must Be Filled Out

ALPHA Lab ID (Lab Use Only)	Sample ID	Collection Date	Start Time	End Time	Initial Vacuum	Final Vacuum	Sample Matrix*	Sampler's Initials	Can Size	I D Can	I D - Flow Controller	TO-14A by TO-15	TO-15	TO-15 SIM	APH	FIXED GASES	TO-13A	TO-4 / TO-10	Sample Comments (i.e. PID)
L1514277.01	TRC-1A-1G 6/21/15	6/22/15	6/21 10:30	6/22 10:30	-30.04	-12.39	AA	SB	6 Liter	774	0364			X					

*SAMPLE MATRIX CODES
AA = Ambient Air (Indoor/Outdoor)
SV = Soil Vapor/Landfill Gas/SVE
Other = Please Specify

Container Type

Relinquished By:	Date/Time	Received By:	Date/Time:
[signature]	6/22/15 11:18	[signature] ALPHA	6/23/15 11:18

Please print clearly, legibly and completely. Samples can not be logged in and turnaround time clock will not start until any ambiguities are resolved. All samples submitted are subject to Alpha's Terms and Conditions. See reverse side.

Form No: 201-02 (12-Jun-09)

ANALYTICAL REPORT

Lab Number:	L1515951
Client:	TRC Environmental Consultants Wannalancit Mills 650 Suffolk Street Lowell, MA 01854
ATTN:	David Sullivan
Phone:	(978) 656-3565
Project Name:	NBHS
Project Number:	115058
Report Date:	07/17/15

The original project report/data package is held by Alpha Analytical. This report/data package is paginated and should be reproduced only in its entirety. Alpha Analytical holds no responsibility for results and/or data that are not consistent with the original.

Certifications & Approvals: NY (11627), CT (PH-0141), NH (2206), NJ NELAP (MA015), RI (LAO00299), ME (MA00030), PA (68-02089), VA (460194), LA NELAP (03090), FL (E87814), TX (T104704419), WA (C954), USFWS (Permit #LE2069641), USDA (Permit #P330-11-00109), US Army Corps of Engineers.

320 Forbes Boulevard, Mansfield, MA 02048-1806
508-822-9300 (Fax) 508-822-3288 800-624-9220 - www.alphalab.com

Project Name: NBHS
Project Number: 115058

Lab Number: L1515951
Report Date: 07/17/15

Alpha Sample ID	Client ID	Matrix	Sample Location	Collection Date/Time	Receive Date
L1515951-01	TRC-IA-16	AIR	NEW BEDFORD	07/10/15 12:33	07/10/15

Project Name: NBHS **Lab Number:** L1515951

Project Number: 115058 **Report Date:** 07/17/15

MADEP MCP Response Action Analytical Report Certification

This form provides certifications for all samples performed by MCP methods. Please refer to the Sample Results and Container Information sections of this report for specification of MCP methods used for each analysis. The following questions pertain only to MCP Analytical Methods.

An affirmative response to questions A through F is required for "Presumptive Certainty" status		
A	Were all samples received in a condition consistent with those described on the Chain-of-Custody, properly preserved (including temperature) in the field or laboratory, and prepared/analyzed within method holding times?	YES
B	Were the analytical method(s) and all associated QC requirements specified in the selected CAM protocol(s) followed?	YES
C	Were all required corrective actions and analytical response actions specified in the selected CAM protocol(s) implemented for all identified performance standard non-conformances?	YES
D	Does the laboratory report comply with all the reporting requirements specified in CAM VII A, "Quality Assurance and Quality Control Guidelines for the Acquisition and Reporting of Analytical Data?"	YES
E a.	VPH, EPH, and APH Methods only: Was each method conducted without significant modification(s)? (Refer to the individual method(s) for a list of significant modifications).	N/A
E b.	APH and TO-15 Methods only: Was the complete analyte list reported for each method?	YES
F	Were all applicable CAM protocol QC and performance standard non-conformances identified and evaluated in a laboratory narrative (including all "No" responses to Questions A through E)?	YES

A response to questions G, H and I is required for "Presumptive Certainty" status		
G	Were the reporting limits at or below all CAM reporting limits specified in the selected CAM protocol(s)?	NO
H	Were all QC performance standards specified in the CAM protocol(s) achieved?	YES
I	Were results reported for the complete analyte list specified in the selected CAM protocol(s)?	YES

For any questions answered "No", please refer to the case narrative section on the following page(s).

Please note that sample matrix information is located in the Sample Results section of this report.

Project Name: NBHS
Project Number: 115058

Lab Number: L1515951
Report Date: 07/17/15

Case Narrative

The samples were received in accordance with the Chain of Custody and no significant deviations were encountered during the preparation or analysis unless otherwise noted. Sample Receipt, Container Information, and the Chain of Custody are located at the back of the report.

Results contained within this report relate only to the samples submitted under this Alpha Lab Number and meet all of the requirements of NELAC, for all NELAC accredited parameters. The data presented in this report is organized by parameter (i.e. VOC, SVOC, etc.). Sample specific Quality Control data (i.e. Surrogate Spike Recovery) is reported at the end of the target analyte list for each individual sample, followed by the Laboratory Batch Quality Control at the end of each parameter. Tentatively Identified Compounds (TICs), if requested, are reported for compounds identified to be present and are not part of the method/program Target Compound List, even if only a subset of the TCL are being reported. If a sample was re-analyzed or re-extracted due to a required quality control corrective action and if both sets of data are reported, the Laboratory ID of the re-analysis or re-extraction is designated with an "R" or "RE", respectively. When multiple Batch Quality Control elements are reported (e.g. more than one LCS), the associated samples for each element are noted in the grey shaded header line of each data table. Any Laboratory Batch, Sample Specific % recovery or RPD value that is outside the listed Acceptance Criteria is bolded in the report. All specific QC information is also incorporated in the Data Usability format of our Data Merger tool where it can be reviewed along with any associated usability implications. Soil/sediments, solids and tissues are reported on a dry weight basis unless otherwise noted. Definitions of all data qualifiers and acronyms used in this report are provided in the Glossary located at the back of the report.

In reference to questions H (CAM) or 4 (RCP) when "NO" is checked, the performance criteria for CAM and RCP methods allow for some quality control failures to occur and still be within method compliance. In these instances the specific failure is not narrated but noted in the associated QC table. The information is also incorporated in the Data Usability format of our Data Merger tool where it can be reviewed along with any associated usability implications.

Please see the associated ADEx data file for a comparison of laboratory reporting limits that were achieved with the regulatory Numerical Standards requested on the Chain of Custody.

HOLD POLICY
For samples submitted on hold, Alpha's policy is to hold samples (with the exception of Air canisters) free of charge for 21 calendar days from the date the project is completed. After 21 calendar days, we will dispose of all samples submitted including those put on hold unless you have contacted your Client Service Representative and made arrangements for Alpha to continue to hold the samples. Air canisters will be disposed after 3 business days from the date the project is completed.

Please contact Client Services at 800-624-9220 with any questions.

Project Name: NBHS **Lab Number:** L1515951
Project Number: 115058 **Report Date:** 07/17/15

Case Narrative (continued)

MCP Related Narratives

Canisters were released from the laboratory on July 9, 2015. The canister certification data is provided as an addendum.

MCP Volatile Organics in Air

In reference to question G:

One or more of the target analytes did not achieve the requested CAM reporting limits.

Sample L1515951-01 results for Acetone should be considered estimated due to co-elution with a non-target peak.

I, the undersigned, attest under the pains and penalties of perjury that, to the best of my knowledge and belief and based upon my personal inquiry of those responsible for providing the information contained in this analytical report, such information is accurate and complete. This certificate of analysis is not complete unless this page accompanies any and all pages of this report.

Authorized Signature: Christopher J. Anderson

Title: Technical Director/Representative Date: 07/17/15

AIR

Project Name: NBHS
Project Number: 115058

Lab Number: L1515951
Report Date: 07/17/15

SAMPLE RESULTS

Lab ID: L1515951-01
Client ID: TRC-IA-16
Sample Location: NEW BEDFORD
Matrix: Air
Anaytical Method: 101,TO15-SIM
Analytical Date: 07/17/15 01:09
Analyst: RY

Date Collected: 07/10/15 12:33
Date Received: 07/10/15
Field Prep: Not Specified

Parameter	ppbV Results	ppbV RL	ppbV MDL	ug/m3 Results	ug/m3 RL	ug/m3 MDL	Qualifier	Dilution Factor
MCP Volatile Organics in Air by SIM - Mansfield Lab								
Vinyl chloride	ND	0.020	--	ND	0.051	--		1
Bromomethane	ND	0.020	--	ND	0.078	--		1
Acetone	22.1	1.00	--	52.5	2.38	--		1
1,1-Dichloroethene	ND	0.020	--	ND	0.079	--		1
Methylene chloride	2.83	1.40	--	9.83	1.74	--		1
trans-1,2-Dichloroethene	ND	0.020	--	ND	0.079	--		1
1,1-Dichloroethane	ND	0.020	--	ND	0.081	--		1
Methyl tert butyl ether	ND	0.200	--	ND	0.721	--		1
2-Butanone	3.25	0.500	--	9.59	1.47	--		1
cis-1,2-Dichloroethene	ND	0.020	--	ND	0.079	--		1
Chloroform	0.846	0.020	--	4.13	0.098	--		1
1,2-Dichloroethane	ND	0.020	--	ND	0.081	--		1
1,1,1-Trichloroethane	0.212	0.020	--	1.16	0.109	--		1
Benzene	1.04	0.100	--	3.32	0.319	--		1
Carbon tetrachloride	0.071	0.020	--	0.447	0.126	--		1
1,2-Dichloropropane	ND	0.020	--	ND	0.092	--		1
Bromodichloromethane	0.138	0.020	--	0.925	0.134	--		1
1,4-Dioxane	ND	0.100	--	ND	0.360	--		1
Trichloroethene	ND	0.020	--	ND	0.107	--		1
cis-1,3-Dichloropropene	ND	0.020	--	ND	0.091	--		1
4-Methyl-2-pentanone	ND	0.500	--	ND	2.05	--		1
trans-1,3-Dichloropropene	ND	0.020	--	ND	0.091	--		1
1,1,2-Trichloroethane	ND	0.020	--	ND	0.109	--		1
Toluene	7.09	0.050	--	26.7	0.188	--		1

Project Name: NBHS
Project Number: 115058

Lab Number: L1515951
Report Date: 07/17/15

SAMPLE RESULTS

Lab ID: L1515951-01
Client ID: TRC-IA-16
Sample Location: NEW BEDFORD

Date Collected: 07/10/15 12:33
Date Received: 07/10/15
Field Prep: Not Specified

Parameter	ppbV Results	ppbV RL	ppbV MDL	ug/m3 Results	ug/m3 RL	ug/m3 MDL	Qualifier	Dilution Factor
MCP Volatile Organics in Air by SIM - Mansfield Lab								
Dibromochloromethane	ND	0.020	--	ND	0.170	--		1
1,2-Dibromoethane	ND	0.020	--	ND	0.154	--		1
Tetrachloroethene	ND	0.020	--	ND	0.136	--		1
Chlorobenzene	ND	0.020	--	ND	0.092	--		1
Ethylbenzene	0.386	0.020	--	1.68	0.087	--		1
p/m-Xylene	1.36	0.040	--	5.91	0.174	--		1
Bromoform	ND	0.020	--	ND	0.207	--		1
Styrene	0.077	0.020	--	0.328	0.085	--		1
1,1,2,2-Tetrachloroethane	ND	0.020	--	ND	0.137	--		1
o-Xylene	0.440	0.020	--	1.91	0.087	--		1
1,3-Dichlorobenzene	ND	0.020	--	ND	0.120	--		1
1,4-Dichlorobenzene	ND	0.020	--	ND	0.120	--		1
1,2-Dichlorobenzene	ND	0.020	--	ND	0.120	--		1
1,2,4-Trichlorobenzene	ND	0.050	--	ND	0.371	--		1
Naphthalene	0.132	0.050	--	0.692	0.262	--		1
Hexachlorobutadiene	ND	0.050	--	ND	0.533	--		1

Internal Standard	% Recovery	Qualifier	Acceptance Criteria
1,4-difluorobenzene	75		60-140
bromochloromethane	83		60-140
chlorobenzene-d5	88		60-140

Project Name: NBHS
Project Number: 115058

Lab Number: L1515951
Report Date: 07/17/15

Method Blank Analysis
Batch Quality Control

Analytical Method: 101,TO15-SIM
Analytical Date: 07/16/15 15:53

Parameter	ppbV Results	ppbV RL	ppbV MDL	ug/m3 Results	ug/m3 RL	ug/m3 MDL	Qualifier	Dilution Factor
MCP Volatile Organics in Air by SIM - Mansfield Lab for sample(s): 01 Batch: WG803473-4								
Dichlorodifluoromethane	ND	0.200	--	ND	0.989	--		1
Chloromethane	ND	0.200	--	ND	0.413	--		1
1,2-Dichloro-1,1,2,2-tetrafluoroethane	ND	0.050	--	ND	0.349	--		1
Vinyl chloride	ND	0.020	--	ND	0.051	--		1
1,3-Butadiene	ND	0.020	--	ND	0.044	--		1
Bromomethane	ND	0.020	--	ND	0.078	--		1
Chloroethane	ND	0.020	--	ND	0.053	--		1
Acetone	ND	1.00	--	ND	2.38	--		1
Trichlorofluoromethane	ND	0.050	--	ND	0.281	--		1
Acrylonitrile	ND	0.500	--	ND	1.09	--		1
1,1-Dichloroethene	ND	0.020	--	ND	0.079	--		1
Methylene chloride	ND	0.500	--	ND	1.74	--		1
1,1,2-Trichloro-1,2,2-Trifluoroethane	ND	0.050	--	ND	0.383	--		1
Halothane	ND	0.050	--	ND	0.404	--		1
trans-1,2-Dichloroethene	ND	0.020	--	ND	0.079	--		1
1,1-Dichloroethane	ND	0.020	--	ND	0.081	--		1
Methyl tert butyl ether	ND	0.200	--	ND	0.721	--		1
2-Butanone	ND	0.500	--	ND	1.47	--		1
cis-1,2-Dichloroethene	ND	0.020	--	ND	0.079	--		1
Chloroform	ND	0.020	--	ND	0.098	--		1
1,2-Dichloroethane	ND	0.020	--	ND	0.081	--		1
1,1,1-Trichloroethane	ND	0.020	--	ND	0.109	--		1
Benzene	ND	0.100	--	ND	0.319	--		1
Carbon tetrachloride	ND	0.020	--	ND	0.126	--		1
1,2-Dichloropropane	ND	0.020	--	ND	0.092	--		1

Project Name: NBHS
Project Number: 115058

Lab Number: L1515951
Report Date: 07/17/15

Method Blank Analysis
Batch Quality Control

Analytical Method: 101,TO15-SIM
Analytical Date: 07/16/15 15:53

Parameter	ppbV Results	ppbV RL	ppbV MDL	ug/m3 Results	ug/m3 RL	ug/m3 MDL	Qualifier	Dilution Factor
MCP Volatile Organics in Air by SIM - Mansfield Lab for sample(s): 01 Batch: WG803473-4								
Bromodichloromethane	ND	0.020	--	ND	0.134	--		1
1,4-Dioxane	ND	0.100	--	ND	0.360	--		1
Trichloroethene	ND	0.020	--	ND	0.107	--		1
cis-1,3-Dichloropropene	ND	0.020	--	ND	0.091	--		1
4-Methyl-2-pentanone	ND	0.500	--	ND	2.05	--		1
trans-1,3-Dichloropropene	ND	0.020	--	ND	0.091	--		1
1,1,2-Trichloroethane	ND	0.020	--	ND	0.109	--		1
Toluene	ND	0.050	--	ND	0.188	--		1
Dibromochloromethane	ND	0.020	--	ND	0.170	--		1
1,2-Dibromoethane	ND	0.020	--	ND	0.154	--		1
Tetrachloroethene	ND	0.020	--	ND	0.136	--		1
1,1,1,2-Tetrachloroethane	ND	0.020	--	ND	0.137	--		1
Chlorobenzene	ND	0.020	--	ND	0.092	--		1
Ethylbenzene	ND	0.020	--	ND	0.087	--		1
p/m-Xylene	ND	0.040	--	ND	0.174	--		1
Bromoform	ND	0.020	--	ND	0.207	--		1
Styrene	ND	0.020	--	ND	0.085	--		1
1,1,2,2-Tetrachloroethane	ND	0.020	--	ND	0.137	--		1
o-Xylene	ND	0.020	--	ND	0.087	--		1
Isopropylbenzene	ND	0.200	--	ND	0.983	--		1
1,3,5-Trimethylbenzene	ND	0.020	--	ND	0.098	--		1
1,2,4-Trimethylbenzene	ND	0.020	--	ND	0.098	--		1
1,3-Dichlorobenzene	ND	0.020	--	ND	0.120	--		1
1,4-Dichlorobenzene	ND	0.020	--	ND	0.120	--		1
sec-Butylbenzene	ND	0.200	--	ND	1.10	--		1

Project Name: NBHS
Project Number: 115058
Lab Number: L1515951
Report Date: 07/17/15

Method Blank Analysis
Batch Quality Control

Analytical Method: 101,TO15-SIM
Analytical Date: 07/16/15 15:53

Parameter	ppbV Results	ppbV RL	ppbV MDL	ug/m3 Results	ug/m3 RL	ug/m3 MDL	Qualifier	Dilution Factor
MCP Volatile Organics in Air by SIM - Mansfield Lab for sample(s): 01 Batch: WG803473-4								
p-Isopropyltoluene	ND	0.200	--	ND	1.10	--		1
1,2-Dichlorobenzene	ND	0.020	--	ND	0.120	--		1
n-Butylbenzene	ND	0.200	--	ND	1.10	--		1
1,2,4-Trichlorobenzene	ND	0.050	--	ND	0.371	--		1
Naphthalene	ND	0.050	--	ND	0.262	--		1
1,2,3-Trichlorobenzene	ND	0.050	--	ND	0.371	--		1
Hexachlorobutadiene	ND	0.050	--	ND	0.533	--		1

Lab Control Sample Analysis
Batch Quality Control

Project Name: NBHS
Project Number: 115058

Lab Number: L1515951
Report Date: 07/17/15

Parameter	LCS %Recovery	Qual	LCSD %Recovery	Qual	%Recovery Limits	RPD	Qual	RPD Limits
MCP Volatile Organics in Air by SIM - Mansfield Lab Associated sample(s): 01 Batch: WG803473-3								
Propylene	94		-		70-130	-		
Dichlorodifluoromethane	70		-		70-130	-		
Chloromethane	88		-		70-130	-		
1,2-Dichloro-1,1,2,2-tetrafluoroethane	92		-		70-130	-		
Vinyl chloride	91		-		70-130	-		
1,3-Butadiene	94		-		70-130	-		
Bromomethane	91		-		70-130	-		
Chloroethane	84		-		70-130	-		
Ethyl Alcohol	82		-		70-130	-		
Vinyl bromide	93		-		70-130	-		
Acetone	92		-		50-150	-		
Trichlorofluoromethane	94		-		70-130	-		
iso-Propyl Alcohol	99		-		70-130	-		
1,1-Dichloroethene	92		-		70-130	-		
Methylene chloride	90		-		70-130	-		
3-Chloropropene	96		-		70-130	-		
Carbon disulfide	87		-		70-130	-		
1,1,2-Trichloro-1,2,2-Trifluoroethane	95		-		70-130	-		
Halothane	117		-		70-130	-		
trans-1,2-Dichloroethene	87		-		70-130	-		
1,1-Dichloroethane	93		-		70-130	-		

Lab Control Sample Analysis
Batch Quality Control

Project Name: NBHS
Project Number: 115058

Lab Number: L1515951
Report Date: 07/17/15

Parameter	LCS %Recovery	Qual	LCSD %Recovery	Qual	%Recovery Limits	RPD	Qual	RPD Limits
MCP Volatile Organics in Air by SIM - Mansfield Lab Associated sample(s): 01 Batch: WG803473-3								
Methyl tert butyl ether	95		-		70-130	-		
Vinyl acetate	106		-		70-130	-		
2-Butanone	89		-		70-130	-		
cis-1,2-Dichloroethene	106		-		70-130	-		
Ethyl Acetate	96		-		70-130	-		
Chloroform	96		-		70-130	-		
Tetrahydrofuran	88		-		70-130	-		
1,2-Dichloroethane	91		-		70-130	-		
n-Hexane	87		-		70-130	-		
1,1,1-Trichloroethane	91		-		70-130	-		
Benzene	88		-		70-130	-		
Carbon tetrachloride	102		-		70-130	-		
Cyclohexane	88		-		70-130	-		
1,2-Dichloropropane	90		-		70-130	-		
Bromodichloromethane	93		-		70-130	-		
1,4-Dioxane	92		-		50-150	-		
Trichloroethene	92		-		70-130	-		
2,2,4-Trimethylpentane	89		-		70-130	-		
cis-1,3-Dichloropropene	100		-		70-130	-		
4-Methyl-2-pentanone	90		-		70-130	-		
trans-1,3-Dichloropropene	86		-		70-130	-		

Lab Control Sample Analysis
Batch Quality Control

Project Name: NBHS
Project Number: 115058

Lab Number: L1515951
Report Date: 07/17/15

Parameter	LCS %Recovery	Qual	LCSD %Recovery	Qual	%Recovery Limits	RPD	Qual	RPD Limits
MCP Volatile Organics in Air by SIM - Mansfield Lab Associated sample(s): 01 Batch: WG803473-3								
1,1,2-Trichloroethane	94		-		70-130	-		
Toluene	92		-		70-130	-		
2-Hexanone	95		-		70-130	-		
Dibromochloromethane	97		-		70-130	-		
1,2-Dibromoethane	97		-		70-130	-		
Tetrachloroethene	95		-		70-130	-		
Chlorobenzene	96		-		70-130	-		
Ethylbenzene	93		-		70-130	-		
p/m-Xylene	93		-		70-130	-		
Bromoform	100		-		70-130	-		
Styrene	98		-		70-130	-		
1,1,2,2-Tetrachloroethane	97		-		70-130	-		
o-Xylene	94		-		70-130	-		
1,3,5-Trimethylbenzene	96		-		70-130	-		
1,2,4-Trimethylbenzene	99		-		70-130	-		
Benzyl chloride	102		-		70-130	-		
1,3-Dichlorobenzene	101		-		70-130	-		
1,4-Dichlorobenzene	101		-		70-130	-		
1,2-Dichlorobenzene	102		-		70-130	-		
1,2,4-Trichlorobenzene	119		-		50-150	-		
Naphthalene	114		-		50-150	-		

Lab Control Sample Analysis
Batch Quality Control

Project Name: NBHS
Project Number: 115058

Lab Number: L1515951
Report Date: 07/17/15

Parameter	LCS %Recovery	Qual	LCSD %Recovery	Qual	%Recovery Limits	RPD	Qual	RPD Limits
MCP Volatile Organics in Air by SIM - Mansfield Lab Associated sample(s): 01 Batch: WG803473-3								
1,2,3-Trichlorobenzene	115		-		70-130	-		
Hexachlorobutadiene	112		-		50-150	-		

Surrogate	LCS %Recovery	Qual	LCSD %Recovery	Qual	Acceptance Criteria
Toluene-d8	96				70-130
Bromofluorobenzene	94				70-130

Project Name: NBHS

Project Number: 115058

Lab Number: L1515951

Report Date: 07/17/15

Canister and Flow Controller Information

Samplenum	Client ID	Media ID	Media Type	Date Prepared	Bottle Order	Cleaning Batch ID	Can Leak Check	Initial Pressure (in. Hg)	Pressure on Receipt (in. Hg)	Flow Controler Leak Chk	Flow Out mL/min	Flow In mL/min	% RPD
L1515951-01	TRC-IA-16	0317	#16 AMB	07/09/15	206361		-	-	-	Pass	3.3	3.1	6
L1515951-01	TRC-IA-16	611	6.0L Can	07/09/15	206361	L1513594-01	Pass	-28.9	-8.6	-	-	-	-

Project Name:

Project Number: CANISTER QC BAT

Lab Number: L1513594

Report Date: 07/17/15

Air Canister Certification Results

Lab ID:	L1513594-01	Date Collected:	06/16/15 18:00
Client ID:	CAN 949 SHELF 42	Date Received:	06/17/15
Sample Location:		Field Prep:	Not Specified
Matrix:	Air		
Anaytical Method:	48,TO-15		
Analytical Date:	06/17/15 20:10		
Analyst:	RY		

	ppbV			ug/m3				
Parameter	**Results**	**RL**	**MDL**	**Results**	**RL**	**MDL**	**Qualifier**	**Dilution Factor**
Volatile Organics in Air - Mansfield Lab								
Chlorodifluoromethane	ND	0.200	--	ND	0.707	--		1
Propylene	ND	0.500	--	ND	0.861	--		1
Dichlorodifluoromethane	ND	0.200	--	ND	0.989	--		1
Chloromethane	ND	0.200	--	ND	0.413	--		1
1,2-Dichloro-1,1,2,2-tetrafluoroethane	ND	0.200	--	ND	1.40	--		1
Methanol	ND	5.00	--	ND	6.55	--		1
Vinyl chloride	ND	0.200	--	ND	0.511	--		1
1,3-Butadiene	ND	0.200	--	ND	0.442	--		1
Butane	ND	0.200	--	ND	0.475	--		1
Bromomethane	ND	0.200	--	ND	0.777	--		1
Chloroethane	ND	0.200	--	ND	0.528	--		1
Ethyl Alcohol	ND	2.50	--	ND	4.71	--		1
Dichlorofluoromethane	ND	0.200	--	ND	0.842	--		1
Vinyl bromide	ND	0.200	--	ND	0.874	--		1
Acrolein	ND	0.500	--	ND	1.15	--		1
Acetone	ND	1.00	--	ND	2.38	--		1
Acetonitrile	ND	0.200	--	ND	0.336	--		1
Trichlorofluoromethane	ND	0.200	--	ND	1.12	--		1
iso-Propyl Alcohol	ND	0.500	--	ND	1.23	--		1
Acrylonitrile	ND	0.500	--	ND	1.09	--		1
Pentane	ND	0.200	--	ND	0.590	--		1
Ethyl ether	ND	0.200	--	ND	0.606	--		1
1,1-Dichloroethene	ND	0.200	--	ND	0.793	--		1
tert-Butyl Alcohol	ND	0.500	--	ND	1.52	--		1
Methylene chloride	ND	0.500	--	ND	1.74	--		1

Project Name:

Project Number: CANISTER QC BAT

Lab Number: L1513594

Report Date: 07/17/15

Air Canister Certification Results

Lab ID: L1513594-01
Client ID: CAN 949 SHELF 42
Sample Location:

Date Collected: 06/16/15 18:00
Date Received: 06/17/15
Field Prep: Not Specified

Parameter	ppbV Results	ppbV RL	ppbV MDL	ug/m3 Results	ug/m3 RL	ug/m3 MDL	Qualifier	Dilution Factor
Volatile Organics in Air - Mansfield Lab								
3-Chloropropene	ND	0.200	--	ND	0.626	--		1
Carbon disulfide	ND	0.200	--	ND	0.623	--		1
1,1,2-Trichloro-1,2,2-Trifluoroethane	ND	0.200	--	ND	1.53	--		1
trans-1,2-Dichloroethene	ND	0.200	--	ND	0.793	--		1
1,1-Dichloroethane	ND	0.200	--	ND	0.809	--		1
Methyl tert butyl ether	ND	0.200	--	ND	0.721	--		1
Vinyl acetate	ND	1.00	--	ND	3.52	--		1
2-Butanone	ND	0.500	--	ND	1.47	--		1
cis-1,2-Dichloroethene	ND	0.200	--	ND	0.793	--		1
Ethyl Acetate	ND	0.500	--	ND	1.80	--		1
Chloroform	ND	0.200	--	ND	0.977	--		1
Tetrahydrofuran	ND	0.500	--	ND	1.47	--		1
2,2-Dichloropropane	ND	0.200	--	ND	0.924	--		1
1,2-Dichloroethane	ND	0.200	--	ND	0.809	--		1
n-Hexane	ND	0.200	--	ND	0.705	--		1
Isopropyl Ether	ND	0.200	--	ND	0.836	--		1
Ethyl-Tert-Butyl-Ether	ND	0.200	--	ND	0.836	--		1
1,1,1-Trichloroethane	ND	0.200	--	ND	1.09	--		1
1,1-Dichloropropene	ND	0.200	--	ND	0.908	--		1
Benzene	ND	0.200	--	ND	0.639	--		1
Carbon tetrachloride	ND	0.200	--	ND	1.26	--		1
Cyclohexane	ND	0.200	--	ND	0.688	--		1
Tertiary-Amyl Methyl Ether	ND	0.200	--	ND	0.836	--		1
Dibromomethane	ND	0.200	--	ND	1.42	--		1
1,2-Dichloropropane	ND	0.200	--	ND	0.924	--		1
Bromodichloromethane	ND	0.200	--	ND	1.34	--		1
1,4-Dioxane	ND	0.200	--	ND	0.721	--		1
Trichloroethene	ND	0.200	--	ND	1.07	--		1

Project Name:

Project Number: CANISTER QC BAT

Lab Number: L1513594

Report Date: 07/17/15

Air Canister Certification Results

Lab ID: L1513594-01
Client ID: CAN 949 SHELF 42
Sample Location:

Date Collected: 06/16/15 18:00
Date Received: 06/17/15
Field Prep: Not Specified

Parameter	ppbV Results	ppbV RL	ppbV MDL	ug/m3 Results	ug/m3 RL	ug/m3 MDL	Qualifier	Dilution Factor
Volatile Organics in Air - Mansfield Lab								
2,2,4-Trimethylpentane	ND	0.200	--	ND	0.934	--		1
Methyl Methacrylate	ND	0.500	--	ND	2.05	--		1
Heptane	ND	0.200	--	ND	0.820	--		1
cis-1,3-Dichloropropene	ND	0.200	--	ND	0.908	--		1
4-Methyl-2-pentanone	ND	0.500	--	ND	2.05	--		1
trans-1,3-Dichloropropene	ND	0.200	--	ND	0.908	--		1
1,1,2-Trichloroethane	ND	0.200	--	ND	1.09	--		1
Toluene	ND	0.200	--	ND	0.754	--		1
1,3-Dichloropropane	ND	0.200	--	ND	0.924	--		1
2-Hexanone	ND	0.200	--	ND	0.820	--		1
Dibromochloromethane	ND	0.200	--	ND	1.70	--		1
1,2-Dibromoethane	ND	0.200	--	ND	1.54	--		1
Butyl Acetate	ND	0.500	--	ND	2.38	--		1
Octane	ND	0.200	--	ND	0.934	--		1
Tetrachloroethene	ND	0.200	--	ND	1.36	--		1
1,1,1,2-Tetrachloroethane	ND	0.200	--	ND	1.37	--		1
Chlorobenzene	ND	0.200	--	ND	0.921	--		1
Ethylbenzene	ND	0.200	--	ND	0.869	--		1
p/m-Xylene	ND	0.400	--	ND	1.74	--		1
Bromoform	ND	0.200	--	ND	2.07	--		1
Styrene	ND	0.200	--	ND	0.852	--		1
1,1,2,2-Tetrachloroethane	ND	0.200	--	ND	1.37	--		1
o-Xylene	ND	0.200	--	ND	0.869	--		1
1,2,3-Trichloropropane	ND	0.200	--	ND	1.21	--		1
Nonane (C9)	ND	0.200	--	ND	1.05	--		1
Isopropylbenzene	ND	0.200	--	ND	0.983	--		1
Bromobenzene	ND	0.200	--	ND	0.793	--		1
o-Chlorotoluene	ND	0.200	--	ND	1.04	--		1

Project Name:

Project Number: CANISTER QC BAT

Lab Number: L1513594

Report Date: 07/17/15

Air Canister Certification Results

Lab ID: L1513594-01
Client ID: CAN 949 SHELF 42
Sample Location:

Date Collected: 06/16/15 18:00
Date Received: 06/17/15
Field Prep: Not Specified

Parameter	ppbV Results	ppbV RL	ppbV MDL	ug/m3 Results	ug/m3 RL	ug/m3 MDL	Qualifier	Dilution Factor
Volatile Organics in Air - Mansfield Lab								
n-Propylbenzene	ND	0.200	--	ND	0.983	--		1
p-Chlorotoluene	ND	0.200	--	ND	1.04	--		1
4-Ethyltoluene	ND	0.200	--	ND	0.983	--		1
1,3,5-Trimethylbenzene	ND	0.200	--	ND	0.983	--		1
tert-Butylbenzene	ND	0.200	--	ND	1.10	--		1
1,2,4-Trimethylbenzene	ND	0.200	--	ND	0.983	--		1
Decane (C10)	ND	0.200	--	ND	1.16	--		1
Benzyl chloride	ND	0.200	--	ND	1.04	--		1
1,3-Dichlorobenzene	ND	0.200	--	ND	1.20	--		1
1,4-Dichlorobenzene	ND	0.200	--	ND	1.20	--		1
sec-Butylbenzene	ND	0.200	--	ND	1.10	--		1
p-Isopropyltoluene	ND	0.200	--	ND	1.10	--		1
1,2-Dichlorobenzene	ND	0.200	--	ND	1.20	--		1
n-Butylbenzene	ND	0.200	--	ND	1.10	--		1
1,2-Dibromo-3-chloropropane	ND	0.200	--	ND	1.93	--		1
Undecane	ND	0.200	--	ND	1.28	--		1
Dodecane (C12)	ND	0.200	--	ND	1.39	--		1
1,2,4-Trichlorobenzene	ND	0.200	--	ND	1.48	--		1
Naphthalene	ND	0.200	--	ND	1.05	--		1
1,2,3-Trichlorobenzene	ND	0.200	--	ND	1.48	--		1
Hexachlorobutadiene	ND	0.200	--	ND	2.13	--		1

	Results	Qualifier	Units	RDL	Dilution Factor
Tentatively Identified Compounds					
No Tentatively Identified Compounds					

Project Name:

Project Number: CANISTER QC BAT

Lab Number: L1513594

Report Date: 07/17/15

Air Canister Certification Results

Lab ID: L1513594-01

Client ID: CAN 949 SHELF 42

Sample Location:

Date Collected: 06/16/15 18:00

Date Received: 06/17/15

Field Prep: Not Specified

Parameter	ppbV Results	ppbV RL	ppbV MDL	ug/m3 Results	ug/m3 RL	ug/m3 MDL	Qualifier	Dilution Factor
Volatile Organics in Air - Mansfield Lab								

Internal Standard	% Recovery	Qualifier	Acceptance Criteria
1,4-Difluorobenzene	86		60-140
Bromochloromethane	85		60-140
chlorobenzene-d5	84		60-140

Project Name:

Project Number: CANISTER QC BAT

Lab Number: L1513594

Report Date: 07/17/15

Air Canister Certification Results

Lab ID:	L1513594-01	Date Collected:	06/16/15 18:00
Client ID:	CAN 949 SHELF 42	Date Received:	06/17/15
Sample Location:		Field Prep:	Not Specified
Matrix:	Air		
Anaytical Method:	48,TO-15-SIM		
Analytical Date:	06/17/15 20:10		
Analyst:	RY		

	ppbV			ug/m3				
Parameter	**Results**	**RL**	**MDL**	**Results**	**RL**	**MDL**	**Qualifier**	**Dilution Factor**
Volatile Organics in Air by SIM - Mansfield Lab								
Dichlorodifluoromethane	ND	0.200	--	ND	0.989	--		1
Chloromethane	ND	0.200	--	ND	0.413	--		1
1,2-Dichloro-1,1,2,2-tetrafluoroethane	ND	0.050	--	ND	0.349	--		1
Vinyl chloride	ND	0.020	--	ND	0.051	--		1
1,3-Butadiene	ND	0.020	--	ND	0.044	--		1
Bromomethane	ND	0.020	--	ND	0.078	--		1
Chloroethane	ND	0.020	--	ND	0.053	--		1
Acetone	ND	1.00	--	ND	2.38	--		1
Trichlorofluoromethane	ND	0.050	--	ND	0.281	--		1
Acrylonitrile	ND	0.500	--	ND	1.09	--		1
1,1-Dichloroethene	ND	0.020	--	ND	0.079	--		1
Methylene chloride	ND	0.500	--	ND	1.74	--		1
1,1,2-Trichloro-1,2,2-Trifluoroethane	ND	0.050	--	ND	0.383	--		1
Halothane	ND	0.050	--	ND	0.404	--		1
trans-1,2-Dichloroethene	ND	0.020	--	ND	0.079	--		1
1,1-Dichloroethane	ND	0.020	--	ND	0.081	--		1
Methyl tert butyl ether	ND	0.200	--	ND	0.721	--		1
2-Butanone	ND	0.500	--	ND	1.47	--		1
cis-1,2-Dichloroethene	ND	0.020	--	ND	0.079	--		1
Chloroform	ND	0.020	--	ND	0.098	--		1
1,2-Dichloroethane	ND	0.020	--	ND	0.081	--		1
1,1,1-Trichloroethane	ND	0.020	--	ND	0.109	--		1
Benzene	ND	0.100	--	ND	0.319	--		1
Carbon tetrachloride	ND	0.020	--	ND	0.126	--		1
1,2-Dichloropropane	ND	0.020	--	ND	0.092	--		1

Project Name:

Project Number: CANISTER QC BAT

Lab Number: L1513594

Report Date: 07/17/15

Air Canister Certification Results

Lab ID: L1513594-01
Client ID: CAN 949 SHELF 42
Sample Location:

Date Collected: 06/16/15 18:00
Date Received: 06/17/15
Field Prep: Not Specified

Parameter	ppbV Results	ppbV RL	ppbV MDL	ug/m3 Results	ug/m3 RL	ug/m3 MDL	Qualifier	Dilution Factor
Volatile Organics in Air by SIM - Mansfield Lab								
Bromodichloromethane	ND	0.020	--	ND	0.134	--		1
1,4-Dioxane	ND	0.100	--	ND	0.360	--		1
Trichloroethene	ND	0.020	--	ND	0.107	--		1
cis-1,3-Dichloropropene	ND	0.020	--	ND	0.091	--		1
4-Methyl-2-pentanone	ND	0.500	--	ND	2.05	--		1
trans-1,3-Dichloropropene	ND	0.020	--	ND	0.091	--		1
1,1,2-Trichloroethane	ND	0.020	--	ND	0.109	--		1
Toluene	ND	0.050	--	ND	0.188	--		1
Dibromochloromethane	ND	0.020	--	ND	0.170	--		1
1,2-Dibromoethane	ND	0.020	--	ND	0.154	--		1
Tetrachloroethene	ND	0.020	--	ND	0.136	--		1
1,1,1,2-Tetrachloroethane	ND	0.020	--	ND	0.137	--		1
Chlorobenzene	ND	0.020	--	ND	0.092	--		1
Ethylbenzene	ND	0.020	--	ND	0.087	--		1
p/m-Xylene	ND	0.040	--	ND	0.174	--		1
Bromoform	ND	0.020	--	ND	0.207	--		1
Styrene	ND	0.020	--	ND	0.085	--		1
1,1,2,2-Tetrachloroethane	ND	0.020	--	ND	0.137	--		1
o-Xylene	ND	0.020	--	ND	0.087	--		1
Isopropylbenzene	ND	0.200	--	ND	0.983	--		1
4-Ethyltoluene	ND	0.020	--	ND	0.098	--		1
1,3,5-Trimethylbenzene	ND	0.020	--	ND	0.098	--		1
1,2,4-Trimethylbenzene	ND	0.020	--	ND	0.098	--		1
1,3-Dichlorobenzene	ND	0.020	--	ND	0.120	--		1
1,4-Dichlorobenzene	ND	0.020	--	ND	0.120	--		1
sec-Butylbenzene	ND	0.200	--	ND	1.10	--		1
p-Isopropyltoluene	ND	0.200	--	ND	1.10	--		1
1,2-Dichlorobenzene	ND	0.020	--	ND	0.120	--		1

Project Name:

Project Number: CANISTER QC BAT

Lab Number: L1513594

Report Date: 07/17/15

Air Canister Certification Results

Lab ID: L1513594-01
Client ID: CAN 949 SHELF 42
Sample Location:

Date Collected: 06/16/15 18:00
Date Received: 06/17/15
Field Prep: Not Specified

	ppbV			ug/m3				
Parameter	**Results**	**RL**	**MDL**	**Results**	**RL**	**MDL**	**Qualifier**	**Dilution Factor**
Volatile Organics in Air by SIM - Mansfield Lab								
n-Butylbenzene	ND	0.200	--	ND	1.10	--		1
1,2,4-Trichlorobenzene	ND	0.050	--	ND	0.371	--		1
Naphthalene	ND	0.050	--	ND	0.262	--		1
1,2,3-Trichlorobenzene	ND	0.050	--	ND	0.371	--		1
Hexachlorobutadiene	ND	0.050	--	ND	0.533	--		1

Internal Standard	**% Recovery**	**Qualifier**	**Acceptance Criteria**
1,4-difluorobenzene	87		60-140
bromochloromethane	89		60-140
chlorobenzene-d5	85		60-140

Project Name: NBHS
Project Number: 115058

Lab Number: L1515951
Report Date: 07/17/15

Sample Receipt and Container Information

Were project specific reporting limits specified? YES

Reagent H2O Preserved Vials Frozen on: NA

Cooler Information

Custody Seal	Cooler
Absent	N/A

Container Information

Container ID	Container Type	Cooler	pH	Temp deg C	Pres	Seal	Analysis(*)
L1515951-01A	Canister - 6 Liter	N/A	N/A		Y	Absent	MCP-TO15-SIM(30)

*Values in parentheses indicate holding time in days

Project Name:	NBHS	**Lab Number:**	L1515951
Project Number:	115058	**Report Date:**	07/17/15

GLOSSARY

Acronyms

EDL	- Estimated Detection Limit: This value represents the level to which target analyte concentrations are reported as estimated values, when those target analyte concentrations are quantified below the reporting limit (RL). The EDL includes any adjustments from dilutions, concentrations or moisture content, where applicable. The use of EDLs is specific to the analysis of PAHs using Solid-Phase Microextraction (SPME).
EPA	- Environmental Protection Agency.
LCS	- Laboratory Control Sample: A sample matrix, free from the analytes of interest, spiked with verified known amounts of analytes or a material containing known and verified amounts of analytes.
LCSD	- Laboratory Control Sample Duplicate: Refer to LCS.
LFB	- Laboratory Fortified Blank: A sample matrix, free from the analytes of interest, spiked with verified known amounts of analytes or a material containing known and verified amounts of analytes.
MDL	- Method Detection Limit: This value represents the level to which target analyte concentrations are reported as estimated values, when those target analyte concentrations are quantified below the reporting limit (RL). The MDL includes any adjustments from dilutions, concentrations or moisture content, where applicable.
MS	- Matrix Spike Sample: A sample prepared by adding a known mass of target analyte to a specified amount of matrix sample for which an independent estimate of target analyte concentration is available.
MSD	- Matrix Spike Sample Duplicate: Refer to MS.
NA	- Not Applicable.
NC	- Not Calculated: Term is utilized when one or more of the results utilized in the calculation are non-detect at the parameter's reporting unit.
NI	- Not Ignitable.
NP	- Non-Plastic: Term is utilized for the analysis of Atterberg Limits in soil.
RL	- Reporting Limit: The value at which an instrument can accurately measure an analyte at a specific concentration. The RL includes any adjustments from dilutions, concentrations or moisture content, where applicable.
RPD	- Relative Percent Difference: The results from matrix and/or matrix spike duplicates are primarily designed to assess the precision of analytical results in a given matrix and are expressed as relative percent difference (RPD). Values which are less than five times the reporting limit for any individual parameter are evaluated by utilizing the absolute difference between the values; although the RPD value will be provided in the report.
SRM	- Standard Reference Material: A reference sample of a known or certified value that is of the same or similar matrix as the associated field samples.
TIC	- Tentatively Identified Compound: A compound that has been identified to be present and is not part of the target compound list (TCL) for the method and/or program. All TICs are qualitatively identified and reported as estimated concentrations.

Footnotes

1	- The reference for this analyte should be considered modified since this analyte is absent from the target analyte list of the original method.

Terms

Total: With respect to Organic analyses, a 'Total' result is defined as the summation of results for individual isomers or Aroclors. If a 'Total' result is requested, the results of its individual components will also be reported. This is applicable to 'Total' results for methods 8260, 8081 and 8082.

Analytical Method: Both the document from which the method originates and the analytical reference method. (Example: EPA 8260B is shown as 1,8260B.) The codes for the reference method documents are provided in the References section of the Addendum.

Data Qualifiers

A	- Spectra identified as "Aldol Condensation Product".
B	- The analyte was detected above the reporting limit in the associated method blank. Flag only applies to associated field samples that have detectable concentrations of the analyte at less than ten times (10x) the concentration found in the blank. For MCP-related projects, flag only applies to associated field samples that have detectable concentrations of the analyte at less than ten times (10x) the concentration found in the blank. For DOD-related projects, flag only applies to associated field samples that have detectable concentrations of the analyte at less than ten times (10x) the concentration found in the blank AND the analyte was detected above one-half the reporting limit (or above the reporting limit for common lab contaminants) in the associated method blank. For NJ-Air-related projects, flag only applies to associated field samples that have detectable concentrations of the analyte above the reporting limit. For NJ-related projects (excluding Air), flag only applies to associated field samples that have detectable concentrations of the analyte, which was detected above the reporting limit in the associated method blank or above five times the reporting limit for common lab contaminants (Phthalates, Acetone, Methylene Chloride, 2-Butanone).
C	- Co-elution: The target analyte co-elutes with a known lab standard (i.e. surrogate, internal standards, etc.) for co-extracted analyses.

Report Format: Data Usability Report

Project Name: NBHS **Lab Number:** L1515951

Project Number: 115058 **Report Date:** 07/17/15

Data Qualifiers

D - Concentration of analyte was quantified from diluted analysis. Flag only applies to field samples that have detectable concentrations of the analyte.

E - Concentration of analyte exceeds the range of the calibration curve and/or linear range of the instrument.

G - The concentration may be biased high due to matrix interferences (i.e, co-elution) with non-target compound(s). The result should be considered estimated.

H - The analysis of pH was performed beyond the regulatory-required holding time of 15 minutes from the time of sample collection.

I - The lower value for the two columns has been reported due to obvious interference.

M - Reporting Limit (RL) exceeds the MCP CAM Reporting Limit for this analyte.

NJ - Presumptive evidence of compound. This represents an estimated concentration for Tentatively Identified Compounds (TICs), where the identification is based on a mass spectral library search.

P - The RPD between the results for the two columns exceeds the method-specified criteria.

Q - The quality control sample exceeds the associated acceptance criteria. For DOD-related projects, LCS and/or Continuing Calibration Standard exceedences are also qualified on all associated sample results. Note: This flag is not applicable for matrix spike recoveries when the sample concentration is greater than 4x the spike added or for batch duplicate RPD when the sample concentrations are less than 5x the RL. (Metals only.)

R - Analytical results are from sample re-analysis.

RE - Analytical results are from sample re-extraction.

S - Analytical results are from modified screening analysis.

J - Estimated value. This represents an estimated concentration for Tentatively Identified Compounds (TICs).

ND - Not detected at the reporting limit (RL) for the sample.

Report Format: Data Usability Report

Project Name: NBHS **Lab Number:** L1515951
Project Number: 115058 **Report Date:** 07/17/15

REFERENCES

101 Compendium of Methods for the Determination of Toxic Organic Compounds in Ambient Air (EPA/625/R-96/010b:January 1999) with QC Requirements & Performance Standards for the Analysis of TO-15 under the Massachusetts Contingency Plan, WSC-CAM-IXB, July 2010.

LIMITATION OF LIABILITIES

Alpha Analytical performs services with reasonable care and diligence normal to the analytical testing laboratory industry. In the event of an error, the sole and exclusive responsibility of Alpha Analytical shall be to re-perform the work at it's own expense. In no event shall Alpha Analytical be held liable for any incidental, consequential or special damages, including but not limited to, damages in any way connected with the use of, interpretation of, information or analysis provided by Alpha Analytical.

We strongly urge our clients to comply with EPA protocol regarding sample volume, preservation, cooling, containers, sampling procedures, holding time and splitting of samples in the field.

Certification Information

Last revised December 16, 2014

The following analytes are not included in our NELAP Scope of Accreditation:

Westborough Facility
EPA 524.2: Acetone, 2-Butanone (Methyl ethyl ketone (MEK)), Tert-butyl alcohol, 2-Hexanone, Tetrahydrofuran, 1,3,5-Trichlorobenzene, 4-Methyl-2-pentanone (MIBK), Carbon disulfide, Diethyl ether.
EPA 8260C: 1,2,4,5-Tetramethylbenzene, 4-Ethyltoluene, Iodomethane (methyl iodide), Methyl methacrylate, Azobenzene.
EPA 8270D: 1-Methylnaphthalene, Dimethylnaphthalene,1,4-Diphenylhydrazine.
EPA 625: 4-Chloroaniline, 4-Methylphenol.
SM4500: Soil: Total Phosphorus, TKN, NO2, NO3.
EPA 9071: Total Petroleum Hydrocarbons, Oil & Grease.

Mansfield Facility
EPA 8270D: Biphenyl.
EPA 2540D: TSS
EPA TO-15: Halothane, 2,4,4-Trimethyl-2-pentene, 2,4,4-Trimethyl-1-pentene, Thiophene, 2-Methylthiophene, 3-Methylthiophene, 2-Ethylthiophene, 1,2,3-Trimethylbenzene, Indan, Indene, 1,2,4,5-Tetramethylbenzene, Benzothiophene, 1-Methylnaphthalene.

The following analytes are included in our Massachusetts DEP Scope of Accreditation, Westborough Facility:

Drinking Water
EPA 200.8: Sb,As,Ba,Be,Cd,Cr,Cu,Pb,Ni,Se,Tl; **EPA 200.7**: Ba,Be,Ca,Cd,Cr,Cu,Na; **EPA 245.1:** Mercury;
EPA 300.0: Nitrate-N, Fluoride, Sulfate; **EPA 353.2**: Nitrate-N, Nitrite-N; **SM4500NO3-F**: Nitrate-N, Nitrite-N; **SM4500F-C, SM4500CN-CE, EPA 180.1, SM2130B, SM4500Cl-D, SM2320B, SM2540C, SM4500H-B**
EPA 332: Perchlorate.
Microbiology: **SM9215B; SM9223-P/A, SM9223B-Colilert-QT, Enterolert-QT.**

Non-Potable Water
EPA 200.8: Al,Sb,As,Be,Cd,Cr,Cu,Pb,Mn,Ni,Se,Ag,Tl,Zn;
EPA 200.7: Al,Sb,As,Be,Cd,Ca,Cr,Co,Cu,Fe,Pb,Mg,Mn,Mo,Ni,K,Se,Ag,Na,Sr,Ti,Tl,V,Zn;
EPA 245.1, SM4500H,B, EPA 120.1, SM2510B, SM2540C, SM2340B, SM2320B, SM4500CL-E, SM4500F-BC, SM426C, SM4500NH3-BH, **EPA 350.1**: Ammonia-N, **LACHAT 10-107-06-1-B**: Ammonia-N, **SM4500NO3-F,**
EPA 353.2: Nitrate-N**, SM4500NH3-BC-NES, EPA 351.1, SM4500P-E, SM4500P-B, E, SM5220D, EPA 410.4, SM5210B, SM5310C, SM4500CL-D, EPA 1664, SM14 510AC, EPA 420.1, SM4500-CN-CE, SM2540D.**
EPA 624: Volatile Halocarbons & Aromatics,
EPA 608: Chlordane, Toxaphene, Aldrin, alpha-BHC, beta-BHC, gamma-BHC, delta-BHC, Dieldrin, DDD, DDE, DDT, Endosulfan I, Endosulfan II, Endosulfan sulfate, Endrin, Endrin Aldehyde, Heptachlor, Heptachlor Epoxide, PCBs
EPA 625: SVOC (Acid/Base/Neutral Extractables), **EPA 600/4-81-045**: PCB-Oil.
Microbiology: **SM9223B-Colilert-QT; Enterolert-QT, SM9222D-MF**.

For a complete listing of analytes and methods, please contact your Alpha Project Manager.

Serial No:07171513:56

AIR ANALYSIS

PAGE 1 OF 1

CHAIN OF CUSTODY

ALPHA ANALYTICAL
320 Forbes Blvd, Mansfield, MA 02048
TEL: 508-822-9300 FAX: 508-822-3288

Date Rec'd in Lab: 7/10/15

ALPHA Job #: L1515951 ~~2054123~~ (KB)

Client Information

Client: TRC
Address: 650 Suffolk St
Lowell MA 01854
Phone: 978 970 5600
Fax: —
Email: Molinard@TRCsolutions.com

☐ These samples have been previously analyzed by Alpha

Project Information

Project Name: NBHS IAQ
Project Location: New Bedford
Project #: 150588/192080
Project Manager: Dave Sullivan
ALPHA Quote #:

Turn-Around Time

☒ Standard ☐ RUSH (only confirmed if pre-approved!)

Date Due: Time:

Report Information - Data Deliverables

☐ FAX
☐ ADEx
Criteria Checker: _____
(Default based on Regulatory Criteria Indicated)
Other Formats: _____
☒ EMAIL (standard pdf report)
☐ Additional Deliverables:
Report to: (if different than Project Manager)

Billing Information

☐ Same as Client info PO #:

Regulatory Requirements/Report Limits

State/Fed	Program	Criteria
MA	MCP	MCP

Other Project Specific Requirements/Comments:

All Columns Below Must Be Filled Out

ALPHA Lab ID (Lab Use Only)	Sample ID	Collection Date	Start Time	End Time	Initial Vacuum	Final Vacuum	Sample Matrix*	Sampler's Initials	Can Size	I D Can	I D - Flow Controller	TO-14A by TO-15	TO-15	TO-15 SIM	APH	FIXED GASES	TO-13A	TO-4 / TO-10	Sample Comments (i.e. PID)
15951-01	TRC-1A-1C	7/9-7/10 2015	12:33	12:33	30.52	-8.52	AA	SB	Clean	C11	0317			X					

*SAMPLE MATRIX CODES
AA = Ambient Air (Indoor/Outdoor)
SV = Soil Vapor/Landfill Gas/SVE
Other = Please Specify

Container Type

Relinquished By:	Date/Time	Received By:	Date/Time:
[signature]	7/10/15 1337	[signature]	7/10/15 13:37

Please print clearly, legibly and completely. Samples can not be logged in and turnaround time clock will not start until any ambiguities are resolved. All samples submitted are subject to Alpha's Terms and Conditions. See reverse side.

ANALYTICAL REPORT

Lab Number:	L1517539
Client:	TRC Environmental Consultants Wannalancit Mills 650 Suffolk Street Lowell, MA 01854
ATTN:	David Sullivan
Phone:	(978) 656-3565
Project Name:	NBHS
Project Number:	115058
Report Date:	08/04/15

The original project report/data package is held by Alpha Analytical. This report/data package is paginated and should be reproduced only in its entirety. Alpha Analytical holds no responsibility for results and/or data that are not consistent with the original.

Certifications & Approvals: NY (11627), CT (PH-0141), NH (2206), NJ NELAP (MA015), RI (LAO00299), ME (MA00030), PA (68-02089), VA (460194), LA NELAP (03090), FL (E87814), TX (T104704419), WA (C954), USFWS (Permit #LE2069641), USDA (Permit #P330-11-00109), US Army Corps of Engineers.

320 Forbes Boulevard, Mansfield, MA 02048-1806
508-822-9300 (Fax) 508-822-3288 800-624-9220 - www.alphalab.com

Project Name: NBHS
Project Number: 115058

Lab Number: L1517539
Report Date: 08/04/15

Alpha Sample ID	Client ID	Matrix	Sample Location	Collection Date/Time	Receive Date
L1517539-01	TRC IA-16	AIR	NEW BEDFORD	07/25/15 06:57	07/28/15
L1517539-02	TRC IA-17	AIR	NEW BEDFORD	07/25/15 06:57	07/28/15
L1517539-03	TRC IA-4	AIR	NEW BEDFORD	07/25/15 06:57	07/28/15
L1517539-04	PVP-6	SOIL_VAPOR	NEW BEDFORD	07/27/15 10:05	07/28/15

Project Name: NBHS **Lab Number:** L1517539

Project Number: 115058 **Report Date:** 08/04/15

MADEP MCP Response Action Analytical Report Certification

This form provides certifications for all samples performed by MCP methods. Please refer to the Sample Results and Container Information sections of this report for specification of MCP methods used for each analysis. The following questions pertain only to MCP Analytical Methods.

An affirmative response to questions A through F is required for "Presumptive Certainty" status		
A	Were all samples received in a condition consistent with those described on the Chain-of-Custody, properly preserved (including temperature) in the field or laboratory, and prepared/analyzed within method holding times?	YES
B	Were the analytical method(s) and all associated QC requirements specified in the selected CAM protocol(s) followed?	YES
C	Were all required corrective actions and analytical response actions specified in the selected CAM protocol(s) implemented for all identified performance standard non-conformances?	YES
D	Does the laboratory report comply with all the reporting requirements specified in CAM VII A, "Quality Assurance and Quality Control Guidelines for the Acquisition and Reporting of Analytical Data?"	YES
E a.	VPH, EPH, and APH Methods only: Was each method conducted without significant modification(s)? (Refer to the individual method(s) for a list of significant modifications).	N/A
E b.	APH and TO-15 Methods only: Was the complete analyte list reported for each method?	YES
F	Were all applicable CAM protocol QC and performance standard non-conformances identified and evaluated in a laboratory narrative (including all "No" responses to Questions A through E)?	YES

A response to questions G, H and I is required for "Presumptive Certainty" status		
G	Were the reporting limits at or below all CAM reporting limits specified in the selected CAM protocol(s)?	NO
H	Were all QC performance standards specified in the CAM protocol(s) achieved?	YES
I	Were results reported for the complete analyte list specified in the selected CAM protocol(s)?	YES

For any questions answered "No", please refer to the case narrative section on the following page(s).

Please note that sample matrix information is located in the Sample Results section of this report.

Project Name: NBHS
Project Number: 115058

Lab Number: L1517539
Report Date: 08/04/15

Case Narrative

The samples were received in accordance with the Chain of Custody and no significant deviations were encountered during the preparation or analysis unless otherwise noted. Sample Receipt, Container Information, and the Chain of Custody are located at the back of the report.

Results contained within this report relate only to the samples submitted under this Alpha Lab Number and meet all of the requirements of NELAC, for all NELAC accredited parameters. The data presented in this report is organized by parameter (i.e. VOC, SVOC, etc.). Sample specific Quality Control data (i.e. Surrogate Spike Recovery) is reported at the end of the target analyte list for each individual sample, followed by the Laboratory Batch Quality Control at the end of each parameter. Tentatively Identified Compounds (TICs), if requested, are reported for compounds identified to be present and are not part of the method/program Target Compound List, even if only a subset of the TCL are being reported. If a sample was re-analyzed or re-extracted due to a required quality control corrective action and if both sets of data are reported, the Laboratory ID of the re-analysis or re-extraction is designated with an "R" or "RE", respectively. When multiple Batch Quality Control elements are reported (e.g. more than one LCS), the associated samples for each element are noted in the grey shaded header line of each data table. Any Laboratory Batch, Sample Specific % recovery or RPD value that is outside the listed Acceptance Criteria is bolded in the report. All specific QC information is also incorporated in the Data Usability format of our Data Merger tool where it can be reviewed along with any associated usability implications. Soil/sediments, solids and tissues are reported on a dry weight basis unless otherwise noted. Definitions of all data qualifiers and acronyms used in this report are provided in the Glossary located at the back of the report.

In reference to questions H (CAM) or 4 (RCP) when "NO" is checked, the performance criteria for CAM and RCP methods allow for some quality control failures to occur and still be within method compliance. In these instances the specific failure is not narrated but noted in the associated QC table. The information is also incorporated in the Data Usability format of our Data Merger tool where it can be reviewed along with any associated usability implications.

Please see the associated ADEx data file for a comparison of laboratory reporting limits that were achieved with the regulatory Numerical Standards requested on the Chain of Custody.

HOLD POLICY
For samples submitted on hold, Alpha's policy is to hold samples (with the exception of Air canisters) free of charge for 21 calendar days from the date the project is completed. After 21 calendar days, we will dispose of all samples submitted including those put on hold unless you have contacted your Client Service Representative and made arrangements for Alpha to continue to hold the samples. Air canisters will be disposed after 3 business days from the date the project is completed.

Please contact Client Services at 800-624-9220 with any questions.

Project Name: NBHS **Lab Number:** L1517539
Project Number: 115058 **Report Date:** 08/04/15

Case Narrative (continued)

MCP Related Narratives

Canisters were released from the laboratory on July 23, 2015. The canister certification data is provided as an addendum.

MCP Volatile Organics in Air

In reference to question G:

One or more of the target analytes did not achieve the requested CAM reporting limits.

Samples L1517539-01 and -02 results for Acetone should be considered estimated due to co-elution with a non-target peak.

Sample L1517539-03 The presence of Acetone could not be determined in this sample due to a non-target compound interfering with the identification and quantification of this compound.

Sample L1517539-04 has elevated detection limits due to the dilution required by the elevated concentrations of target compounds in the sample.

Sample Receipt

The sample designated PVP-6 (L1517539-04) had a RPD for the pre- and post-flow controller calibration check (27% RPD) that was outside of the control limit (20% RPD). The initial flow rate for the flow controller was144 mL/minute; the final flow rate was 110 mL/minute. The final pressure recorded by the laboratory of the associated canister was -2.4 inches of mercury.

I, the undersigned, attest under the pains and penalties of perjury that, to the best of my knowledge and belief and based upon my personal inquiry of those responsible for providing the information contained in this analytical report, such information is accurate and complete. This certificate of analysis is not complete unless this page accompanies any and all pages of this report.

Authorized Signature: Christopher J. Anderson

Title: Technical Director/Representative Date: 08/04/15

AIR

Project Name: NBHS
Project Number: 115058

Lab Number: L1517539
Report Date: 08/04/15

SAMPLE RESULTS

Lab ID: L1517539-01
Client ID: TRC IA-16
Sample Location: NEW BEDFORD
Matrix: Air
Anaytical Method: 101,TO15-SIM
Analytical Date: 07/30/15 20:46
Analyst: RY

Date Collected: 07/25/15 06:57
Date Received: 07/28/15
Field Prep: Not Specified

Parameter	ppbV Results	ppbV RL	ppbV MDL	ug/m3 Results	ug/m3 RL	ug/m3 MDL	Qualifier	Dilution Factor
MCP Volatile Organics in Air by SIM - Mansfield Lab								
Vinyl chloride	ND	0.020	--	ND	0.051	--		1
Bromomethane	ND	0.020	--	ND	0.078	--		1
Acetone	29.6	1.00	--	70.3	2.38	--		1
1,1-Dichloroethene	ND	0.020	--	ND	0.079	--		1
Methylene chloride	ND	1.40	--	2.59	1.74	--		1
trans-1,2-Dichloroethene	ND	0.020	--	ND	0.079	--		1
1,1-Dichloroethane	ND	0.020	--	ND	0.081	--		1
Methyl tert butyl ether	ND	0.200	--	ND	0.721	--		1
2-Butanone	3.86	0.500	--	11.4	1.47	--		1
cis-1,2-Dichloroethene	ND	0.020	--	ND	0.079	--		1
Chloroform	1.09	0.020	--	5.32	0.098	--		1
1,2-Dichloroethane	ND	0.020	--	ND	0.081	--		1
1,1,1-Trichloroethane	0.387	0.020	--	2.11	0.109	--		1
Benzene	3.53	0.100	--	11.3	0.319	--		1
Carbon tetrachloride	0.070	0.020	--	0.440	0.126	--		1
1,2-Dichloropropane	ND	0.020	--	ND	0.092	--		1
Bromodichloromethane	0.157	0.020	--	1.05	0.134	--		1
1,4-Dioxane	ND	0.100	--	ND	0.360	--		1
Trichloroethene	ND	0.020	--	ND	0.107	--		1
cis-1,3-Dichloropropene	ND	0.020	--	ND	0.091	--		1
4-Methyl-2-pentanone	ND	0.500	--	ND	2.05	--		1
trans-1,3-Dichloropropene	ND	0.020	--	ND	0.091	--		1
1,1,2-Trichloroethane	ND	0.020	--	ND	0.109	--		1
Toluene	8.78	0.050	--	33.1	0.188	--		1

Project Name: NBHS
Project Number: 115058

Lab Number: L1517539
Report Date: 08/04/15

SAMPLE RESULTS

Lab ID: L1517539-01
Client ID: TRC IA-16
Sample Location: NEW BEDFORD

Date Collected: 07/25/15 06:57
Date Received: 07/28/15
Field Prep: Not Specified

Parameter	ppbV Results	ppbV RL	ppbV MDL	ug/m3 Results	ug/m3 RL	ug/m3 MDL	Qualifier	Dilution Factor
MCP Volatile Organics in Air by SIM - Mansfield Lab								
Dibromochloromethane	ND	0.020	--	ND	0.170	--		1
1,2-Dibromoethane	ND	0.020	--	ND	0.154	--		1
Tetrachloroethene	0.028	0.020	--	0.190	0.136	--		1
Chlorobenzene	ND	0.020	--	ND	0.092	--		1
Ethylbenzene	0.514	0.020	--	2.23	0.087	--		1
p/m-Xylene	1.82	0.040	--	7.91	0.174	--		1
Bromoform	ND	0.020	--	ND	0.207	--		1
Styrene	0.160	0.020	--	0.681	0.085	--		1
1,1,2,2-Tetrachloroethane	ND	0.020	--	ND	0.137	--		1
o-Xylene	0.591	0.020	--	2.57	0.087	--		1
1,3-Dichlorobenzene	ND	0.020	--	ND	0.120	--		1
1,4-Dichlorobenzene	0.037	0.020	--	0.222	0.120	--		1
1,2-Dichlorobenzene	ND	0.020	--	ND	0.120	--		1
1,2,4-Trichlorobenzene	ND	0.050	--	ND	0.371	--		1
Naphthalene	0.167	0.050	--	0.876	0.262	--		1
Hexachlorobutadiene	ND	0.050	--	ND	0.533	--		1

Internal Standard	% Recovery	Qualifier	Acceptance Criteria
1,4-difluorobenzene	78		60-140
bromochloromethane	83		60-140
chlorobenzene-d5	85		60-140

Project Name: NBHS
Project Number: 115058

Lab Number: L1517539
Report Date: 08/04/15

SAMPLE RESULTS

Lab ID: L1517539-02
Client ID: TRC IA-17
Sample Location: NEW BEDFORD
Matrix: Air
Anaytical Method: 101,TO15-SIM
Analytical Date: 07/30/15 21:18
Analyst: RY

Date Collected: 07/25/15 06:57
Date Received: 07/28/15
Field Prep: Not Specified

Parameter	ppbV Results	ppbV RL	ppbV MDL	ug/m3 Results	ug/m3 RL	ug/m3 MDL	Qualifier	Dilution Factor
MCP Volatile Organics in Air by SIM - Mansfield Lab								
Vinyl chloride	ND	0.020	--	ND	0.051	--		1
Bromomethane	ND	0.020	--	ND	0.078	--		1
Acetone	27.5	1.00	--	65.3	2.38	--		1
1,1-Dichloroethene	ND	0.020	--	ND	0.079	--		1
Methylene chloride	ND	1.40	--	1.99	1.74	--		1
trans-1,2-Dichloroethene	ND	0.020	--	ND	0.079	--		1
1,1-Dichloroethane	ND	0.020	--	ND	0.081	--		1
Methyl tert butyl ether	ND	0.200	--	ND	0.721	--		1
2-Butanone	3.72	0.500	--	11.0	1.47	--		1
cis-1,2-Dichloroethene	ND	0.020	--	ND	0.079	--		1
Chloroform	0.919	0.020	--	4.49	0.098	--		1
1,2-Dichloroethane	ND	0.020	--	ND	0.081	--		1
1,1,1-Trichloroethane	0.430	0.020	--	2.35	0.109	--		1
Benzene	1.14	0.100	--	3.64	0.319	--		1
Carbon tetrachloride	0.068	0.020	--	0.428	0.126	--		1
1,2-Dichloropropane	ND	0.020	--	ND	0.092	--		1
Bromodichloromethane	0.159	0.020	--	1.07	0.134	--		1
1,4-Dioxane	ND	0.100	--	ND	0.360	--		1
Trichloroethene	ND	0.020	--	ND	0.107	--		1
cis-1,3-Dichloropropene	ND	0.020	--	ND	0.091	--		1
4-Methyl-2-pentanone	ND	0.500	--	ND	2.05	--		1
trans-1,3-Dichloropropene	ND	0.020	--	ND	0.091	--		1
1,1,2-Trichloroethane	ND	0.020	--	ND	0.109	--		1
Toluene	8.89	0.050	--	33.5	0.188	--		1

Project Name: NBHS
Project Number: 115058

Lab Number: L1517539
Report Date: 08/04/15

SAMPLE RESULTS

Lab ID: L1517539-02
Client ID: TRC IA-17
Sample Location: NEW BEDFORD

Date Collected: 07/25/15 06:57
Date Received: 07/28/15
Field Prep: Not Specified

Parameter	ppbV Results	ppbV RL	ppbV MDL	ug/m3 Results	ug/m3 RL	ug/m3 MDL	Qualifier	Dilution Factor
MCP Volatile Organics in Air by SIM - Mansfield Lab								
Dibromochloromethane	ND	0.020	--	ND	0.170	--		1
1,2-Dibromoethane	ND	0.020	--	ND	0.154	--		1
Tetrachloroethene	0.037	0.020	--	0.251	0.136	--		1
Chlorobenzene	ND	0.020	--	ND	0.092	--		1
Ethylbenzene	0.573	0.020	--	2.49	0.087	--		1
p/m-Xylene	2.02	0.040	--	8.77	0.174	--		1
Bromoform	ND	0.020	--	ND	0.207	--		1
Styrene	0.130	0.020	--	0.553	0.085	--		1
1,1,2,2-Tetrachloroethane	ND	0.020	--	ND	0.137	--		1
o-Xylene	0.637	0.020	--	2.77	0.087	--		1
1,3-Dichlorobenzene	ND	0.020	--	ND	0.120	--		1
1,4-Dichlorobenzene	0.023	0.020	--	0.138	0.120	--		1
1,2-Dichlorobenzene	ND	0.020	--	ND	0.120	--		1
1,2,4-Trichlorobenzene	ND	0.050	--	ND	0.371	--		1
Naphthalene	0.105	0.050	--	0.551	0.262	--		1
Hexachlorobutadiene	ND	0.050	--	ND	0.533	--		1

Internal Standard	% Recovery	Qualifier	Acceptance Criteria
1,4-difluorobenzene	80		60-140
bromochloromethane	83		60-140
chlorobenzene-d5	87		60-140

Project Name: NBHS
Project Number: 115058

Lab Number: L1517539
Report Date: 08/04/15

SAMPLE RESULTS

Lab ID: L1517539-03
Client ID: TRC IA-4
Sample Location: NEW BEDFORD
Matrix: Air
Anaytical Method: 101,TO15-SIM
Analytical Date: 07/30/15 21:51
Analyst: RY

Date Collected: 07/25/15 06:57
Date Received: 07/28/15
Field Prep: Not Specified

Parameter	ppbV Results	ppbV RL	ppbV MDL	ug/m3 Results	ug/m3 RL	ug/m3 MDL	Qualifier	Dilution Factor
MCP Volatile Organics in Air by SIM - Mansfield Lab								
Vinyl chloride	ND	0.020	--	ND	0.051	--		1
Bromomethane	ND	0.020	--	ND	0.078	--		1
Acetone	ND	1.00	--	ND	2.38	--		1
1,1-Dichloroethene	ND	0.020	--	ND	0.079	--		1
Methylene chloride	ND	1.40	--	3.45	1.74	--		1
trans-1,2-Dichloroethene	ND	0.020	--	ND	0.079	--		1
1,1-Dichloroethane	ND	0.020	--	ND	0.081	--		1
Methyl tert butyl ether	ND	0.200	--	ND	0.721	--		1
2-Butanone	0.611	0.500	--	1.80	1.47	--		1
cis-1,2-Dichloroethene	ND	0.020	--	ND	0.079	--		1
Chloroform	0.118	0.020	--	0.576	0.098	--		1
1,2-Dichloroethane	0.027	0.020	--	0.109	0.081	--		1
1,1,1-Trichloroethane	0.040	0.020	--	0.218	0.109	--		1
Benzene	0.184	0.100	--	0.588	0.319	--		1
Carbon tetrachloride	0.076	0.020	--	0.478	0.126	--		1
1,2-Dichloropropane	ND	0.020	--	ND	0.092	--		1
Bromodichloromethane	ND	0.020	--	ND	0.134	--		1
1,4-Dioxane	ND	0.100	--	ND	0.360	--		1
Trichloroethene	ND	0.020	--	ND	0.107	--		1
cis-1,3-Dichloropropene	ND	0.020	--	ND	0.091	--		1
4-Methyl-2-pentanone	ND	0.500	--	ND	2.05	--		1
trans-1,3-Dichloropropene	ND	0.020	--	ND	0.091	--		1
1,1,2-Trichloroethane	ND	0.020	--	ND	0.109	--		1
Toluene	1.03	0.050	--	3.88	0.188	--		1

Project Name: NBHS
Project Number: 115058
Lab Number: L1517539
Report Date: 08/04/15

SAMPLE RESULTS

Lab ID: L1517539-03
Client ID: TRC IA-4
Sample Location: NEW BEDFORD
Date Collected: 07/25/15 06:57
Date Received: 07/28/15
Field Prep: Not Specified

Parameter	ppbV Results	ppbV RL	ppbV MDL	ug/m3 Results	ug/m3 RL	ug/m3 MDL	Qualifier	Dilution Factor
MCP Volatile Organics in Air by SIM - Mansfield Lab								
Dibromochloromethane	ND	0.020	--	ND	0.170	--		1
1,2-Dibromoethane	ND	0.020	--	ND	0.154	--		1
Tetrachloroethene	0.029	0.020	--	0.197	0.136	--		1
Chlorobenzene	ND	0.020	--	ND	0.092	--		1
Ethylbenzene	0.132	0.020	--	0.573	0.087	--		1
p/m-Xylene	0.280	0.040	--	1.22	0.174	--		1
Bromoform	ND	0.020	--	ND	0.207	--		1
Styrene	1.24	0.020	--	5.28	0.085	--		1
1,1,2,2-Tetrachloroethane	ND	0.020	--	ND	0.137	--		1
o-Xylene	0.110	0.020	--	0.478	0.087	--		1
1,3-Dichlorobenzene	ND	0.020	--	ND	0.120	--		1
1,4-Dichlorobenzene	0.027	0.020	--	0.162	0.120	--		1
1,2-Dichlorobenzene	ND	0.020	--	ND	0.120	--		1
1,2,4-Trichlorobenzene	ND	0.050	--	ND	0.371	--		1
Naphthalene	0.055	0.050	--	0.288	0.262	--		1
Hexachlorobutadiene	ND	0.050	--	ND	0.533	--		1

Internal Standard	% Recovery	Qualifier	Acceptance Criteria
1,4-difluorobenzene	70		60-140
bromochloromethane	80		60-140
chlorobenzene-d5	85		60-140

Project Name: NBHS
Project Number: 115058

Lab Number: L1517539
Report Date: 08/04/15

SAMPLE RESULTS

Lab ID: L1517539-04 D
Client ID: PVP-6
Sample Location: NEW BEDFORD
Matrix: Soil_Vapor
Anaytical Method: 101,TO15-SIM
Analytical Date: 07/30/15 22:22
Analyst: RY

Date Collected: 07/27/15 10:05
Date Received: 07/28/15
Field Prep: Not Specified

Parameter	ppbV Results	ppbV RL	ppbV MDL	ug/m3 Results	ug/m3 RL	ug/m3 MDL	Qualifier	Dilution Factor
MCP Volatile Organics in Air by SIM - Mansfield Lab								
Vinyl chloride	0.776	0.067	--	1.98	0.171	--		3.333
Bromomethane	ND	0.067	--	ND	0.259	--		3.333
Acetone	ND	3.33	--	ND	7.91	--		3.333
1,1-Dichloroethene	ND	0.067	--	ND	0.264	--		3.333
Methylene chloride	ND	1.67	--	ND	5.80	--		3.333
trans-1,2-Dichloroethene	77.3	0.067	--	306	0.264	--		3.333
1,1-Dichloroethane	ND	0.067	--	ND	0.270	--		3.333
Methyl tert butyl ether	ND	0.667	--	ND	2.40	--		3.333
2-Butanone	ND	1.67	--	ND	4.93	--		3.333
cis-1,2-Dichloroethene	7.31	0.067	--	29.0	0.264	--		3.333
Chloroform	0.963	0.067	--	4.70	0.326	--		3.333
1,2-Dichloroethane	ND	0.067	--	ND	0.270	--		3.333
1,1,1-Trichloroethane	0.257	0.067	--	1.40	0.364	--		3.333
Benzene	0.343	0.333	--	1.10	1.06	--		3.333
Carbon tetrachloride	ND	0.067	--	ND	0.420	--		3.333
1,2-Dichloropropane	ND	0.067	--	ND	0.308	--		3.333
Bromodichloromethane	ND	0.067	--	ND	0.447	--		3.333
1,4-Dioxane	ND	0.333	--	ND	1.20	--		3.333
Trichloroethene	154	0.067	--	828	0.358	--		3.333
cis-1,3-Dichloropropene	ND	0.067	--	ND	0.303	--		3.333
4-Methyl-2-pentanone	ND	1.67	--	ND	6.84	--		3.333
trans-1,3-Dichloropropene	ND	0.067	--	ND	0.303	--		3.333
1,1,2-Trichloroethane	ND	0.067	--	ND	0.364	--		3.333
Toluene	0.503	0.167	--	1.90	0.629	--		3.333

Project Name: NBHS
Project Number: 115058
Lab Number: L1517539
Report Date: 08/04/15

SAMPLE RESULTS

Lab ID: L1517539-04 D
Client ID: PVP-6
Sample Location: NEW BEDFORD
Date Collected: 07/27/15 10:05
Date Received: 07/28/15
Field Prep: Not Specified

Parameter	ppbV Results	ppbV RL	ppbV MDL	ug/m3 Results	ug/m3 RL	ug/m3 MDL	Qualifier	Dilution Factor
MCP Volatile Organics in Air by SIM - Mansfield Lab								
Dibromochloromethane	ND	0.067	--	ND	0.568	--		3.333
1,2-Dibromoethane	ND	0.067	--	ND	0.513	--		3.333
Tetrachloroethene	0.610	0.067	--	4.14	0.452	--		3.333
Chlorobenzene	0.430	0.067	--	1.98	0.307	--		3.333
Ethylbenzene	0.120	0.067	--	0.521	0.290	--		3.333
p/m-Xylene	0.467	0.133	--	2.03	0.578	--		3.333
Bromoform	ND	0.067	--	ND	0.690	--		3.333
Styrene	ND	0.067	--	ND	0.284	--		3.333
1,1,2,2-Tetrachloroethane	ND	0.067	--	ND	0.458	--		3.333
o-Xylene	0.203	0.067	--	0.882	0.290	--		3.333
1,3-Dichlorobenzene	ND	0.067	--	ND	0.401	--		3.333
1,4-Dichlorobenzene	ND	0.067	--	ND	0.401	--		3.333
1,2-Dichlorobenzene	ND	0.067	--	ND	0.401	--		3.333
1,2,4-Trichlorobenzene	ND	0.167	--	ND	1.24	--		3.333
Naphthalene	ND	0.167	--	ND	0.876	--		3.333
Hexachlorobutadiene	ND	0.167	--	ND	1.78	--		3.333

Internal Standard	% Recovery	Qualifier	Acceptance Criteria
1,4-difluorobenzene	78		60-140
bromochloromethane	85		60-140
chlorobenzene-d5	88		60-140

Project Name: NBHS
Project Number: 115058

Lab Number: L1517539
Report Date: 08/04/15

Method Blank Analysis
Batch Quality Control

Analytical Method: 101,TO15-SIM
Analytical Date: 07/30/15 15:01

Parameter	ppbV Results	ppbV RL	ppbV MDL	ug/m3 Results	ug/m3 RL	ug/m3 MDL	Qualifier	Dilution Factor
MCP Volatile Organics in Air by SIM - Mansfield Lab for sample(s): 01-04 Batch: WG807513-4								
Dichlorodifluoromethane	ND	0.200	--	ND	0.989	--		1
Chloromethane	ND	0.200	--	ND	0.413	--		1
1,2-Dichloro-1,1,2,2-tetrafluoroethane	ND	0.050	--	ND	0.349	--		1
Vinyl chloride	ND	0.020	--	ND	0.051	--		1
1,3-Butadiene	ND	0.020	--	ND	0.044	--		1
Bromomethane	ND	0.020	--	ND	0.078	--		1
Chloroethane	ND	0.020	--	ND	0.053	--		1
Acetone	ND	1.00	--	ND	2.38	--		1
Trichlorofluoromethane	ND	0.050	--	ND	0.281	--		1
Acrylonitrile	ND	0.500	--	ND	1.09	--		1
1,1-Dichloroethene	ND	0.020	--	ND	0.079	--		1
Methylene chloride	ND	0.500	--	ND	1.74	--		1
1,1,2-Trichloro-1,2,2-Trifluoroethane	ND	0.050	--	ND	0.383	--		1
Halothane	ND	0.050	--	ND	0.404	--		1
trans-1,2-Dichloroethene	ND	0.020	--	ND	0.079	--		1
1,1-Dichloroethane	ND	0.020	--	ND	0.081	--		1
Methyl tert butyl ether	ND	0.200	--	ND	0.721	--		1
2-Butanone	ND	0.500	--	ND	1.47	--		1
cis-1,2-Dichloroethene	ND	0.020	--	ND	0.079	--		1
Chloroform	ND	0.020	--	ND	0.098	--		1
1,2-Dichloroethane	ND	0.020	--	ND	0.081	--		1
1,1,1-Trichloroethane	ND	0.020	--	ND	0.109	--		1
Benzene	ND	0.100	--	ND	0.319	--		1
Carbon tetrachloride	ND	0.020	--	ND	0.126	--		1
1,2-Dichloropropane	ND	0.020	--	ND	0.092	--		1

Project Name: NBHS
Project Number: 115058

Lab Number: L1517539
Report Date: 08/04/15

Method Blank Analysis
Batch Quality Control

Analytical Method: 101,TO15-SIM
Analytical Date: 07/30/15 15:01

Parameter	ppbV Results	ppbV RL	ppbV MDL	ug/m3 Results	ug/m3 RL	ug/m3 MDL	Qualifier	Dilution Factor
MCP Volatile Organics in Air by SIM - Mansfield Lab for sample(s): 01-04 Batch: WG807513-4								
Bromodichloromethane	ND	0.020	--	ND	0.134	--		1
1,4-Dioxane	ND	0.100	--	ND	0.360	--		1
Trichloroethene	ND	0.020	--	ND	0.107	--		1
cis-1,3-Dichloropropene	ND	0.020	--	ND	0.091	--		1
4-Methyl-2-pentanone	ND	0.500	--	ND	2.05	--		1
trans-1,3-Dichloropropene	ND	0.020	--	ND	0.091	--		1
1,1,2-Trichloroethane	ND	0.020	--	ND	0.109	--		1
Toluene	ND	0.050	--	ND	0.188	--		1
Dibromochloromethane	ND	0.020	--	ND	0.170	--		1
1,2-Dibromoethane	ND	0.020	--	ND	0.154	--		1
Tetrachloroethene	ND	0.020	--	ND	0.136	--		1
1,1,1,2-Tetrachloroethane	ND	0.020	--	ND	0.137	--		1
Chlorobenzene	ND	0.020	--	ND	0.092	--		1
Ethylbenzene	ND	0.020	--	ND	0.087	--		1
p/m-Xylene	ND	0.040	--	ND	0.174	--		1
Bromoform	ND	0.020	--	ND	0.207	--		1
Styrene	ND	0.020	--	ND	0.085	--		1
1,1,2,2-Tetrachloroethane	ND	0.020	--	ND	0.137	--		1
o-Xylene	ND	0.020	--	ND	0.087	--		1
Isopropylbenzene	ND	0.200	--	ND	0.983	--		1
1,3,5-Trimethylbenzene	ND	0.020	--	ND	0.098	--		1
1,2,4-Trimethylbenzene	ND	0.020	--	ND	0.098	--		1
1,3-Dichlorobenzene	ND	0.020	--	ND	0.120	--		1
1,4-Dichlorobenzene	ND	0.020	--	ND	0.120	--		1
sec-Butylbenzene	ND	0.200	--	ND	1.10	--		1

Project Name: NBHS
Project Number: 115058

Lab Number: L1517539
Report Date: 08/04/15

Method Blank Analysis
Batch Quality Control

Analytical Method: 101,TO15-SIM
Analytical Date: 07/30/15 15:01

Parameter	ppbV Results	ppbV RL	ppbV MDL	ug/m3 Results	ug/m3 RL	ug/m3 MDL	Qualifier	Dilution Factor
MCP Volatile Organics in Air by SIM - Mansfield Lab for sample(s): 01-04 Batch: WG807513-4								
p-Isopropyltoluene	ND	0.200	--	ND	1.10	--		1
1,2-Dichlorobenzene	ND	0.020	--	ND	0.120	--		1
n-Butylbenzene	ND	0.200	--	ND	1.10	--		1
1,2,4-Trichlorobenzene	ND	0.050	--	ND	0.371	--		1
Naphthalene	ND	0.050	--	ND	0.262	--		1
1,2,3-Trichlorobenzene	ND	0.050	--	ND	0.371	--		1
Hexachlorobutadiene	ND	0.050	--	ND	0.533	--		1

Lab Control Sample Analysis
Batch Quality Control

Project Name: NBHS
Project Number: 115058

Lab Number: L1517539
Report Date: 08/04/15

Parameter	LCS %Recovery	Qual	LCSD %Recovery	Qual	%Recovery Limits	RPD	Qual	RPD Limits
MCP Volatile Organics in Air by SIM - Mansfield Lab Associated sample(s): 01-04 Batch: WG807513-3								
Dichlorodifluoromethane	75		-		70-130	-		
Chloromethane	93		-		70-130	-		
1,2-Dichloro-1,1,2,2-tetrafluoroethane	95		-		70-130	-		
Vinyl chloride	95		-		70-130	-		
1,3-Butadiene	101		-		70-130	-		
Bromomethane	93		-		70-130	-		
Chloroethane	88		-		70-130	-		
Acetone	99		-		50-150	-		
Trichlorofluoromethane	96		-		70-130	-		
1,1-Dichloroethene	95		-		70-130	-		
Methylene chloride	98		-		70-130	-		
1,1,2-Trichloro-1,2,2-Trifluoroethane	97		-		70-130	-		
Halothane	106		-		70-130	-		
trans-1,2-Dichloroethene	78		-		70-130	-		
1,1-Dichloroethane	93		-		70-130	-		
Methyl tert butyl ether	94		-		70-130	-		
2-Butanone	91		-		70-130	-		
cis-1,2-Dichloroethene	105		-		70-130	-		
Chloroform	93		-		70-130	-		
1,2-Dichloroethane	92		-		70-130	-		
1,1,1-Trichloroethane	92		-		70-130	-		

Lab Control Sample Analysis
Batch Quality Control

Project Name: NBHS
Project Number: 115058

Lab Number: L1517539
Report Date: 08/04/15

Parameter	LCS %Recovery	Qual	LCSD %Recovery	Qual	%Recovery Limits	RPD	Qual	RPD Limits
MCP Volatile Organics in Air by SIM - Mansfield Lab Associated sample(s): 01-04 Batch: WG807513-3								
Benzene	90		-		70-130	-		
Carbon tetrachloride	102		-		70-130	-		
1,2-Dichloropropane	92		-		70-130	-		
Bromodichloromethane	93		-		70-130	-		
1,4-Dioxane	91		-		50-150	-		
Trichloroethene	90		-		70-130	-		
cis-1,3-Dichloropropene	100		-		70-130	-		
4-Methyl-2-pentanone	92		-		70-130	-		
trans-1,3-Dichloropropene	87		-		70-130	-		
1,1,2-Trichloroethane	96		-		70-130	-		
Toluene	92		-		70-130	-		
Dibromochloromethane	95		-		70-130	-		
1,2-Dibromoethane	96		-		70-130	-		
Tetrachloroethene	94		-		70-130	-		
Chlorobenzene	95		-		70-130	-		
Ethylbenzene	92		-		70-130	-		
p/m-Xylene	91		-		70-130	-		
Bromoform	97		-		70-130	-		
Styrene	96		-		70-130	-		
1,1,2,2-Tetrachloroethane	96		-		70-130	-		
o-Xylene	94		-		70-130	-		

Lab Control Sample Analysis
Batch Quality Control

Project Name: NBHS
Project Number: 115058

Lab Number: L1517539
Report Date: 08/04/15

Parameter	LCS %Recovery	Qual	LCSD %Recovery	Qual	%Recovery Limits	RPD	Qual	RPD Limits
MCP Volatile Organics in Air by SIM - Mansfield Lab Associated sample(s): 01-04 Batch: WG807513-3								
1,3,5-Trimethylbenzene	95		-		70-130	-		
1,2,4-Trimethylbenzene	98		-		70-130	-		
1,3-Dichlorobenzene	100		-		70-130	-		
1,4-Dichlorobenzene	99		-		70-130	-		
1,2-Dichlorobenzene	100		-		70-130	-		
1,2,4-Trichlorobenzene	122		-		50-150	-		
Naphthalene	118		-		50-150	-		
1,2,3-Trichlorobenzene	118		-		70-130	-		
Hexachlorobutadiene	110		-		50-150	-		

Project Name: NBHS

Project Number: 115058

Lab Number: L1517539

Report Date: 08/04/15

Canister and Flow Controller Information

Samplenum	Client ID	Media ID	Media Type	Date Prepared	Bottle Order	Cleaning Batch ID	Can Leak Check	Initial Pressure (in. Hg)	Pressure on Receipt (in. Hg)	Flow Controler Leak Chk	Flow Out mL/min	Flow In mL/min	% RPD
L1517539-01	TRC IA-16	0147	#16 AMB	07/23/15	206927		-	-	-	Pass	3.2	3.0	6
L1517539-01	TRC IA-16	2115	6.0L Can	07/23/15	206927	L1516240-01	Pass	-29.2	-8.5	-	-	-	-
L1517539-02	TRC IA-17	0618	#16 AMB	07/23/15	206927		-	-	-	Pass	3.1	2.9	7
L1517539-02	TRC IA-17	1902	6.0L Can	07/23/15	206927	L1514298-01	Pass	-29.7	-8.4	-	-	-	-
L1517539-03	TRC IA-4	0619	#16 AMB	07/23/15	206927		-	-	-	Pass	3.1	3.2	3
L1517539-03	TRC IA-4	689	6.0L Can	07/23/15	206927	L1516240-01	Pass	-29.2	-9.2	-	-	-	-
L1517539-04	PVP-6	0336	#90 SV	07/23/15	206974		-	-	-	Pass	144	110	27
L1517539-04	PVP-6	240	2.7L Can	07/23/15	206974	L1516634-01	Pass	-29.0	-2.4	-	-	-	-

Project Name:

Project Number: CANISTER QC BAT

Lab Number: L1514298

Report Date: 08/04/15

Air Canister Certification Results

Lab ID:	L1514298-01	Date Collected:	06/23/15 18:00
Client ID:	CAN 1902 SHELF 36	Date Received:	06/24/15
Sample Location:		Field Prep:	Not Specified
Matrix:	Air		
Anaytical Method:	48,TO-15		
Analytical Date:	06/24/15 15:52		
Analyst:	RY		

	ppbV			ug/m3				
Parameter	**Results**	**RL**	**MDL**	**Results**	**RL**	**MDL**	**Qualifier**	**Dilution Factor**
Volatile Organics in Air - Mansfield Lab								
Chlorodifluoromethane	ND	0.200	--	ND	0.707	--		1
Propylene	ND	0.500	--	ND	0.861	--		1
Dichlorodifluoromethane	ND	0.200	--	ND	0.989	--		1
Chloromethane	ND	0.200	--	ND	0.413	--		1
1,2-Dichloro-1,1,2,2-tetrafluoroethane	ND	0.200	--	ND	1.40	--		1
Methanol	ND	5.00	--	ND	6.55	--		1
Vinyl chloride	ND	0.200	--	ND	0.511	--		1
1,3-Butadiene	ND	0.200	--	ND	0.442	--		1
Butane	ND	0.200	--	ND	0.475	--		1
Bromomethane	ND	0.200	--	ND	0.777	--		1
Chloroethane	ND	0.200	--	ND	0.528	--		1
Ethyl Alcohol	ND	2.50	--	ND	4.71	--		1
Dichlorofluoromethane	ND	0.200	--	ND	0.842	--		1
Vinyl bromide	ND	0.200	--	ND	0.874	--		1
Acrolein	ND	0.500	--	ND	1.15	--		1
Acetone	ND	1.00	--	ND	2.38	--		1
Acetonitrile	ND	0.200	--	ND	0.336	--		1
Trichlorofluoromethane	ND	0.200	--	ND	1.12	--		1
iso-Propyl Alcohol	ND	0.500	--	ND	1.23	--		1
Acrylonitrile	ND	0.500	--	ND	1.09	--		1
Pentane	ND	0.200	--	ND	0.590	--		1
Ethyl ether	ND	0.200	--	ND	0.606	--		1
1,1-Dichloroethene	ND	0.200	--	ND	0.793	--		1
tert-Butyl Alcohol	ND	0.500	--	ND	1.52	--		1
Methylene chloride	ND	0.500	--	ND	1.74	--		1

Project Name:

Project Number: CANISTER QC BAT

Lab Number: L1514298

Report Date: 08/04/15

Air Canister Certification Results

Lab ID: L1514298-01
Client ID: CAN 1902 SHELF 36
Sample Location:

Date Collected: 06/23/15 18:00
Date Received: 06/24/15
Field Prep: Not Specified

Parameter	ppbV Results	ppbV RL	ppbV MDL	ug/m3 Results	ug/m3 RL	ug/m3 MDL	Qualifier	Dilution Factor
Volatile Organics in Air - Mansfield Lab								
3-Chloropropene	ND	0.200	--	ND	0.626	--		1
Carbon disulfide	ND	0.200	--	ND	0.623	--		1
1,1,2-Trichloro-1,2,2-Trifluoroethane	ND	0.200	--	ND	1.53	--		1
trans-1,2-Dichloroethene	ND	0.200	--	ND	0.793	--		1
1,1-Dichloroethane	ND	0.200	--	ND	0.809	--		1
Methyl tert butyl ether	ND	0.200	--	ND	0.721	--		1
Vinyl acetate	ND	1.00	--	ND	3.52	--		1
2-Butanone	ND	0.500	--	ND	1.47	--		1
cis-1,2-Dichloroethene	ND	0.200	--	ND	0.793	--		1
Ethyl Acetate	ND	0.500	--	ND	1.80	--		1
Chloroform	ND	0.200	--	ND	0.977	--		1
Tetrahydrofuran	ND	0.500	--	ND	1.47	--		1
2,2-Dichloropropane	ND	0.200	--	ND	0.924	--		1
1,2-Dichloroethane	ND	0.200	--	ND	0.809	--		1
n-Hexane	ND	0.200	--	ND	0.705	--		1
Isopropyl Ether	ND	0.200	--	ND	0.836	--		1
Ethyl-Tert-Butyl-Ether	ND	0.200	--	ND	0.836	--		1
1,1,1-Trichloroethane	ND	0.200	--	ND	1.09	--		1
1,1-Dichloropropene	ND	0.200	--	ND	0.908	--		1
Benzene	ND	0.200	--	ND	0.639	--		1
Carbon tetrachloride	ND	0.200	--	ND	1.26	--		1
Cyclohexane	ND	0.200	--	ND	0.688	--		1
Tertiary-Amyl Methyl Ether	ND	0.200	--	ND	0.836	--		1
Dibromomethane	ND	0.200	--	ND	1.42	--		1
1,2-Dichloropropane	ND	0.200	--	ND	0.924	--		1
Bromodichloromethane	ND	0.200	--	ND	1.34	--		1
1,4-Dioxane	ND	0.200	--	ND	0.721	--		1
Trichloroethene	ND	0.200	--	ND	1.07	--		1

Project Name:

Project Number: CANISTER QC BAT

Lab Number: L1514298

Report Date: 08/04/15

Air Canister Certification Results

Lab ID: L1514298-01
Client ID: CAN 1902 SHELF 36
Sample Location:

Date Collected: 06/23/15 18:00
Date Received: 06/24/15
Field Prep: Not Specified

Parameter	ppbV Results	ppbV RL	ppbV MDL	ug/m3 Results	ug/m3 RL	ug/m3 MDL	Qualifier	Dilution Factor
Volatile Organics in Air - Mansfield Lab								
2,2,4-Trimethylpentane	ND	0.200	--	ND	0.934	--		1
Methyl Methacrylate	ND	0.500	--	ND	2.05	--		1
Heptane	ND	0.200	--	ND	0.820	--		1
cis-1,3-Dichloropropene	ND	0.200	--	ND	0.908	--		1
4-Methyl-2-pentanone	ND	0.500	--	ND	2.05	--		1
trans-1,3-Dichloropropene	ND	0.200	--	ND	0.908	--		1
1,1,2-Trichloroethane	ND	0.200	--	ND	1.09	--		1
Toluene	ND	0.200	--	ND	0.754	--		1
1,3-Dichloropropane	ND	0.200	--	ND	0.924	--		1
2-Hexanone	ND	0.200	--	ND	0.820	--		1
Dibromochloromethane	ND	0.200	--	ND	1.70	--		1
1,2-Dibromoethane	ND	0.200	--	ND	1.54	--		1
Butyl Acetate	ND	0.500	--	ND	2.38	--		1
Octane	ND	0.200	--	ND	0.934	--		1
Tetrachloroethene	ND	0.200	--	ND	1.36	--		1
1,1,1,2-Tetrachloroethane	ND	0.200	--	ND	1.37	--		1
Chlorobenzene	ND	0.200	--	ND	0.921	--		1
Ethylbenzene	ND	0.200	--	ND	0.869	--		1
p/m-Xylene	ND	0.400	--	ND	1.74	--		1
Bromoform	ND	0.200	--	ND	2.07	--		1
Styrene	ND	0.200	--	ND	0.852	--		1
1,1,2,2-Tetrachloroethane	ND	0.200	--	ND	1.37	--		1
o-Xylene	ND	0.200	--	ND	0.869	--		1
1,2,3-Trichloropropane	ND	0.200	--	ND	1.21	--		1
Nonane (C9)	ND	0.200	--	ND	1.05	--		1
Isopropylbenzene	ND	0.200	--	ND	0.983	--		1
Bromobenzene	ND	0.200	--	ND	0.793	--		1
o-Chlorotoluene	ND	0.200	--	ND	1.04	--		1

Project Name:

Lab Number: L1514298

Project Number: CANISTER QC BAT

Report Date: 08/04/15

Air Canister Certification Results

Lab ID: L1514298-01
Client ID: CAN 1902 SHELF 36
Sample Location:

Date Collected: 06/23/15 18:00
Date Received: 06/24/15
Field Prep: Not Specified

Parameter	ppbV Results	ppbV RL	ppbV MDL	ug/m3 Results	ug/m3 RL	ug/m3 MDL	Qualifier	Dilution Factor
Volatile Organics in Air - Mansfield Lab								
n-Propylbenzene	ND	0.200	--	ND	0.983	--		1
p-Chlorotoluene	ND	0.200	--	ND	1.04	--		1
4-Ethyltoluene	ND	0.200	--	ND	0.983	--		1
1,3,5-Trimethylbenzene	ND	0.200	--	ND	0.983	--		1
tert-Butylbenzene	ND	0.200	--	ND	1.10	--		1
1,2,4-Trimethylbenzene	ND	0.200	--	ND	0.983	--		1
Decane (C10)	ND	0.200	--	ND	1.16	--		1
Benzyl chloride	ND	0.200	--	ND	1.04	--		1
1,3-Dichlorobenzene	ND	0.200	--	ND	1.20	--		1
1,4-Dichlorobenzene	ND	0.200	--	ND	1.20	--		1
sec-Butylbenzene	ND	0.200	--	ND	1.10	--		1
p-Isopropyltoluene	ND	0.200	--	ND	1.10	--		1
1,2-Dichlorobenzene	ND	0.200	--	ND	1.20	--		1
n-Butylbenzene	ND	0.200	--	ND	1.10	--		1
1,2-Dibromo-3-chloropropane	ND	0.200	--	ND	1.93	--		1
Undecane	ND	0.200	--	ND	1.28	--		1
Dodecane (C12)	ND	0.200	--	ND	1.39	--		1
1,2,4-Trichlorobenzene	ND	0.200	--	ND	1.48	--		1
Naphthalene	ND	0.200	--	ND	1.05	--		1
1,2,3-Trichlorobenzene	ND	0.200	--	ND	1.48	--		1
Hexachlorobutadiene	ND	0.200	--	ND	2.13	--		1

	Results	Qualifier	Units	RDL	Dilution Factor
Tentatively Identified Compounds					
No Tentatively Identified Compounds					

Project Name:

Project Number: CANISTER QC BAT

Lab Number: L1514298

Report Date: 08/04/15

Air Canister Certification Results

Lab ID:	L1514298-01	Date Collected:	06/23/15 18:00
Client ID:	CAN 1902 SHELF 36	Date Received:	06/24/15
Sample Location:		Field Prep:	Not Specified

	ppbV			ug/m3				
Parameter	**Results**	**RL**	**MDL**	**Results**	**RL**	**MDL**	**Qualifier**	**Dilution Factor**
Volatile Organics in Air - Mansfield Lab								

Internal Standard	**% Recovery**	**Qualifier**	**Acceptance Criteria**
1,4-Difluorobenzene	87		60-140
Bromochloromethane	91		60-140
chlorobenzene-d5	84		60-140

Project Name:

Project Number: CANISTER QC BAT

Lab Number: L1514298

Report Date: 08/04/15

Air Canister Certification Results

Lab ID:	L1514298-01	Date Collected:	06/23/15 18:00
Client ID:	CAN 1902 SHELF 36	Date Received:	06/24/15
Sample Location:		Field Prep:	Not Specified
Matrix:	Air		
Anaytical Method:	48,TO-15-SIM		
Analytical Date:	06/24/15 15:52		
Analyst:	RY		

	ppbV			ug/m3				
Parameter	**Results**	**RL**	**MDL**	**Results**	**RL**	**MDL**	**Qualifier**	**Dilution Factor**
Volatile Organics in Air by SIM - Mansfield Lab								
Dichlorodifluoromethane	ND	0.200	--	ND	0.989	--		1
Chloromethane	ND	0.200	--	ND	0.413	--		1
1,2-Dichloro-1,1,2,2-tetrafluoroethane	ND	0.050	--	ND	0.349	--		1
Vinyl chloride	ND	0.020	--	ND	0.051	--		1
1,3-Butadiene	ND	0.020	--	ND	0.044	--		1
Bromomethane	ND	0.020	--	ND	0.078	--		1
Chloroethane	ND	0.020	--	ND	0.053	--		1
Acetone	ND	1.00	--	ND	2.38	--		1
Trichlorofluoromethane	ND	0.050	--	ND	0.281	--		1
Acrylonitrile	ND	0.500	--	ND	1.09	--		1
1,1-Dichloroethene	ND	0.020	--	ND	0.079	--		1
Methylene chloride	ND	0.500	--	ND	1.74	--		1
1,1,2-Trichloro-1,2,2-Trifluoroethane	ND	0.050	--	ND	0.383	--		1
Halothane	ND	0.050	--	ND	0.404	--		1
trans-1,2-Dichloroethene	ND	0.020	--	ND	0.079	--		1
1,1-Dichloroethane	ND	0.020	--	ND	0.081	--		1
Methyl tert butyl ether	ND	0.200	--	ND	0.721	--		1
2-Butanone	ND	0.500	--	ND	1.47	--		1
cis-1,2-Dichloroethene	ND	0.020	--	ND	0.079	--		1
Chloroform	ND	0.020	--	ND	0.098	--		1
1,2-Dichloroethane	ND	0.020	--	ND	0.081	--		1
1,1,1-Trichloroethane	ND	0.020	--	ND	0.109	--		1
Benzene	ND	0.100	--	ND	0.319	--		1
Carbon tetrachloride	ND	0.020	--	ND	0.126	--		1
1,2-Dichloropropane	ND	0.020	--	ND	0.092	--		1

Project Name:

Project Number: CANISTER QC BAT

Lab Number: L1514298

Report Date: 08/04/15

Air Canister Certification Results

Lab ID: L1514298-01
Client ID: CAN 1902 SHELF 36
Sample Location:

Date Collected: 06/23/15 18:00
Date Received: 06/24/15
Field Prep: Not Specified

Parameter	ppbV Results	ppbV RL	ppbV MDL	ug/m3 Results	ug/m3 RL	ug/m3 MDL	Qualifier	Dilution Factor
Volatile Organics in Air by SIM - Mansfield Lab								
Bromodichloromethane	ND	0.020	--	ND	0.134	--		1
1,4-Dioxane	ND	0.100	--	ND	0.360	--		1
Trichloroethene	ND	0.020	--	ND	0.107	--		1
cis-1,3-Dichloropropene	ND	0.020	--	ND	0.091	--		1
4-Methyl-2-pentanone	ND	0.500	--	ND	2.05	--		1
trans-1,3-Dichloropropene	ND	0.020	--	ND	0.091	--		1
1,1,2-Trichloroethane	ND	0.020	--	ND	0.109	--		1
Toluene	ND	0.050	--	ND	0.188	--		1
Dibromochloromethane	ND	0.020	--	ND	0.170	--		1
1,2-Dibromoethane	ND	0.020	--	ND	0.154	--		1
Tetrachloroethene	ND	0.020	--	ND	0.136	--		1
1,1,1,2-Tetrachloroethane	ND	0.020	--	ND	0.137	--		1
Chlorobenzene	ND	0.020	--	ND	0.092	--		1
Ethylbenzene	ND	0.020	--	ND	0.087	--		1
p/m-Xylene	ND	0.040	--	ND	0.174	--		1
Bromoform	ND	0.020	--	ND	0.207	--		1
Styrene	ND	0.020	--	ND	0.085	--		1
1,1,2,2-Tetrachloroethane	ND	0.020	--	ND	0.137	--		1
o-Xylene	ND	0.020	--	ND	0.087	--		1
Isopropylbenzene	ND	0.200	--	ND	0.983	--		1
4-Ethyltoluene	ND	0.020	--	ND	0.098	--		1
1,3,5-Trimethylbenzene	ND	0.020	--	ND	0.098	--		1
1,2,4-Trimethylbenzene	ND	0.020	--	ND	0.098	--		1
1,3-Dichlorobenzene	ND	0.020	--	ND	0.120	--		1
1,4-Dichlorobenzene	ND	0.020	--	ND	0.120	--		1
sec-Butylbenzene	ND	0.200	--	ND	1.10	--		1
p-Isopropyltoluene	ND	0.200	--	ND	1.10	--		1
1,2-Dichlorobenzene	ND	0.020	--	ND	0.120	--		1

Project Name:

Project Number: CANISTER QC BAT

Lab Number: L1514298

Report Date: 08/04/15

Air Canister Certification Results

Lab ID: L1514298-01
Client ID: CAN 1902 SHELF 36
Sample Location:

Date Collected: 06/23/15 18:00
Date Received: 06/24/15
Field Prep: Not Specified

Parameter	ppbV Results	ppbV RL	ppbV MDL	ug/m3 Results	ug/m3 RL	ug/m3 MDL	Qualifier	Dilution Factor
Volatile Organics in Air by SIM - Mansfield Lab								
n-Butylbenzene	ND	0.200	--	ND	1.10	--		1
1,2,4-Trichlorobenzene	ND	0.050	--	ND	0.371	--		1
Naphthalene	ND	0.050	--	ND	0.262	--		1
1,2,3-Trichlorobenzene	ND	0.050	--	ND	0.371	--		1
Hexachlorobutadiene	ND	0.050	--	ND	0.533	--		1

Internal Standard	% Recovery	Qualifier	Acceptance Criteria
1,4-difluorobenzene	90		60-140
bromochloromethane	93		60-140
chlorobenzene-d5	88		60-140

Project Name:

Project Number: CANISTER QC BAT

Lab Number: L1516240

Report Date: 08/04/15

Air Canister Certification Results

Lab ID:	L1516240-01	Date Collected:	07/14/15 18:00
Client ID:	CAN 1711 SHELF 37	Date Received:	07/15/15
Sample Location:		Field Prep:	Not Specified
Matrix:	Air		
Anaytical Method:	48,TO-15		
Analytical Date:	07/16/15 16:36		
Analyst:	RY		

	ppbV			ug/m3				
Parameter	**Results**	**RL**	**MDL**	**Results**	**RL**	**MDL**	**Qualifier**	**Dilution Factor**
Volatile Organics in Air - Mansfield Lab								
Chlorodifluoromethane	ND	0.200	--	ND	0.707	--		1
Propylene	ND	0.500	--	ND	0.861	--		1
Propane	ND	0.500	--	ND	0.902	--		1
Dichlorodifluoromethane	ND	0.200	--	ND	0.989	--		1
Chloromethane	ND	0.200	--	ND	0.413	--		1
1,2-Dichloro-1,1,2,2-tetrafluoroethane	ND	0.200	--	ND	1.40	--		1
Methanol	ND	5.00	--	ND	6.55	--		1
Vinyl chloride	ND	0.200	--	ND	0.511	--		1
1,3-Butadiene	ND	0.200	--	ND	0.442	--		1
Butane	ND	0.200	--	ND	0.475	--		1
Bromomethane	ND	0.200	--	ND	0.777	--		1
Chloroethane	ND	0.200	--	ND	0.528	--		1
Ethyl Alcohol	ND	2.50	--	ND	4.71	--		1
Dichlorofluoromethane	ND	0.200	--	ND	0.842	--		1
Vinyl bromide	ND	0.200	--	ND	0.874	--		1
Acrolein	ND	0.500	--	ND	1.15	--		1
Acetone	ND	1.00	--	ND	2.38	--		1
Acetonitrile	ND	0.200	--	ND	0.336	--		1
Trichlorofluoromethane	ND	0.200	--	ND	1.12	--		1
iso-Propyl Alcohol	ND	0.500	--	ND	1.23	--		1
Acrylonitrile	ND	0.500	--	ND	1.09	--		1
Pentane	ND	0.200	--	ND	0.590	--		1
Ethyl ether	ND	0.200	--	ND	0.606	--		1
1,1-Dichloroethene	ND	0.200	--	ND	0.793	--		1
tert-Butyl Alcohol	ND	0.500	--	ND	1.52	--		1

Project Name:

Project Number: CANISTER QC BAT

Lab Number: L1516240

Report Date: 08/04/15

Air Canister Certification Results

Lab ID: L1516240-01
Client ID: CAN 1711 SHELF 37
Sample Location:

Date Collected: 07/14/15 18:00
Date Received: 07/15/15
Field Prep: Not Specified

Parameter	ppbV Results	ppbV RL	ppbV MDL	ug/m3 Results	ug/m3 RL	ug/m3 MDL	Qualifier	Dilution Factor
Volatile Organics in Air - Mansfield Lab								
Methylene chloride	ND	0.500	--	ND	1.74	--		1
3-Chloropropene	ND	0.200	--	ND	0.626	--		1
Carbon disulfide	ND	0.200	--	ND	0.623	--		1
1,1,2-Trichloro-1,2,2-Trifluoroethane	ND	0.200	--	ND	1.53	--		1
trans-1,2-Dichloroethene	ND	0.200	--	ND	0.793	--		1
1,1-Dichloroethane	ND	0.200	--	ND	0.809	--		1
Methyl tert butyl ether	ND	0.200	--	ND	0.721	--		1
Vinyl acetate	ND	1.00	--	ND	3.52	--		1
2-Butanone	ND	0.500	--	ND	1.47	--		1
cis-1,2-Dichloroethene	ND	0.200	--	ND	0.793	--		1
Ethyl Acetate	ND	0.500	--	ND	1.80	--		1
Chloroform	ND	0.200	--	ND	0.977	--		1
Tetrahydrofuran	ND	0.500	--	ND	1.47	--		1
2,2-Dichloropropane	ND	0.200	--	ND	0.924	--		1
1,2-Dichloroethane	ND	0.200	--	ND	0.809	--		1
n-Hexane	ND	0.200	--	ND	0.705	--		1
Isopropyl Ether	ND	0.200	--	ND	0.836	--		1
Ethyl-Tert-Butyl-Ether	ND	0.200	--	ND	0.836	--		1
1,1,1-Trichloroethane	ND	0.200	--	ND	1.09	--		1
1,1-Dichloropropene	ND	0.200	--	ND	0.908	--		1
Benzene	ND	0.200	--	ND	0.639	--		1
Carbon tetrachloride	ND	0.200	--	ND	1.26	--		1
Cyclohexane	ND	0.200	--	ND	0.688	--		1
Tertiary-Amyl Methyl Ether	ND	0.200	--	ND	0.836	--		1
Dibromomethane	ND	0.200	--	ND	1.42	--		1
1,2-Dichloropropane	ND	0.200	--	ND	0.924	--		1
Bromodichloromethane	ND	0.200	--	ND	1.34	--		1
1,4-Dioxane	ND	0.200	--	ND	0.721	--		1

Project Name:

Project Number: CANISTER QC BAT

Lab Number: L1516240

Report Date: 08/04/15

Air Canister Certification Results

Lab ID: L1516240-01
Client ID: CAN 1711 SHELF 37
Sample Location:

Date Collected: 07/14/15 18:00
Date Received: 07/15/15
Field Prep: Not Specified

Parameter	ppbV Results	ppbV RL	ppbV MDL	ug/m3 Results	ug/m3 RL	ug/m3 MDL	Qualifier	Dilution Factor
Volatile Organics in Air - Mansfield Lab								
Trichloroethene	ND	0.200	--	ND	1.07	--		1
2,2,4-Trimethylpentane	ND	0.200	--	ND	0.934	--		1
Methyl Methacrylate	ND	0.500	--	ND	2.05	--		1
Heptane	ND	0.200	--	ND	0.820	--		1
cis-1,3-Dichloropropene	ND	0.200	--	ND	0.908	--		1
4-Methyl-2-pentanone	ND	0.500	--	ND	2.05	--		1
trans-1,3-Dichloropropene	ND	0.200	--	ND	0.908	--		1
1,1,2-Trichloroethane	ND	0.200	--	ND	1.09	--		1
Toluene	ND	0.200	--	ND	0.754	--		1
1,3-Dichloropropane	ND	0.200	--	ND	0.924	--		1
2-Hexanone	ND	0.200	--	ND	0.820	--		1
Dibromochloromethane	ND	0.200	--	ND	1.70	--		1
1,2-Dibromoethane	ND	0.200	--	ND	1.54	--		1
Butyl Acetate	ND	0.500	--	ND	2.38	--		1
Octane	ND	0.200	--	ND	0.934	--		1
Tetrachloroethene	ND	0.200	--	ND	1.36	--		1
1,1,1,2-Tetrachloroethane	ND	0.200	--	ND	1.37	--		1
Chlorobenzene	ND	0.200	--	ND	0.921	--		1
Ethylbenzene	ND	0.200	--	ND	0.869	--		1
p/m-Xylene	ND	0.400	--	ND	1.74	--		1
Bromoform	ND	0.200	--	ND	2.07	--		1
Styrene	ND	0.200	--	ND	0.852	--		1
1,1,2,2-Tetrachloroethane	ND	0.200	--	ND	1.37	--		1
o-Xylene	ND	0.200	--	ND	0.869	--		1
1,2,3-Trichloropropane	ND	0.200	--	ND	1.21	--		1
Nonane (C9)	ND	0.200	--	ND	1.05	--		1
Isopropylbenzene	ND	0.200	--	ND	0.983	--		1
Bromobenzene	ND	0.200	--	ND	0.793	--		1

Project Name:

Project Number: CANISTER QC BAT

Lab Number: L1516240

Report Date: 08/04/15

Air Canister Certification Results

Lab ID: L1516240-01
Client ID: CAN 1711 SHELF 37
Sample Location:

Date Collected: 07/14/15 18:00
Date Received: 07/15/15
Field Prep: Not Specified

Parameter	ppbV Results	ppbV RL	ppbV MDL	ug/m3 Results	ug/m3 RL	ug/m3 MDL	Qualifier	Dilution Factor
Volatile Organics in Air - Mansfield Lab								
o-Chlorotoluene	ND	0.200	--	ND	1.04	--		1
n-Propylbenzene	ND	0.200	--	ND	0.983	--		1
p-Chlorotoluene	ND	0.200	--	ND	1.04	--		1
4-Ethyltoluene	ND	0.200	--	ND	0.983	--		1
1,3,5-Trimethylbenzene	ND	0.200	--	ND	0.983	--		1
tert-Butylbenzene	ND	0.200	--	ND	1.10	--		1
1,2,4-Trimethylbenzene	ND	0.200	--	ND	0.983	--		1
Decane (C10)	ND	0.200	--	ND	1.16	--		1
Benzyl chloride	ND	0.200	--	ND	1.04	--		1
1,3-Dichlorobenzene	ND	0.200	--	ND	1.20	--		1
1,4-Dichlorobenzene	ND	0.200	--	ND	1.20	--		1
sec-Butylbenzene	ND	0.200	--	ND	1.10	--		1
p-Isopropyltoluene	ND	0.200	--	ND	1.10	--		1
1,2-Dichlorobenzene	ND	0.200	--	ND	1.20	--		1
n-Butylbenzene	ND	0.200	--	ND	1.10	--		1
1,2-Dibromo-3-chloropropane	ND	0.200	--	ND	1.93	--		1
Undecane	ND	0.200	--	ND	1.28	--		1
Dodecane (C12)	ND	0.200	--	ND	1.39	--		1
1,2,4-Trichlorobenzene	ND	0.200	--	ND	1.48	--		1
Naphthalene	ND	0.200	--	ND	1.05	--		1
1,2,3-Trichlorobenzene	ND	0.200	--	ND	1.48	--		1
Hexachlorobutadiene	ND	0.200	--	ND	2.13	--		1

	Results	Qualifier	Units	RDL	Dilution Factor
Tentatively Identified Compounds					
No Tentatively Identified Compounds					

Project Name:

Project Number: CANISTER QC BAT

Lab Number: L1516240

Report Date: 08/04/15

Air Canister Certification Results

Lab ID:	L1516240-01	Date Collected:	07/14/15 18:00
Client ID:	CAN 1711 SHELF 37	Date Received:	07/15/15
Sample Location:		Field Prep:	Not Specified

	ppbV			ug/m3				
Parameter	**Results**	**RL**	**MDL**	**Results**	**RL**	**MDL**	**Qualifier**	**Dilution Factor**
Volatile Organics in Air - Mansfield Lab								

Internal Standard	**% Recovery**	**Qualifier**	**Acceptance Criteria**
1,4-Difluorobenzene	89		60-140
Bromochloromethane	87		60-140
chlorobenzene-d5	87		60-140

Project Name:

Project Number: CANISTER QC BAT

Lab Number: L1516240

Report Date: 08/04/15

Air Canister Certification Results

Lab ID:	L1516240-01	Date Collected:	07/14/15 18:00
Client ID:	CAN 1711 SHELF 37	Date Received:	07/15/15
Sample Location:		Field Prep:	Not Specified
Matrix:	Air		
Anaytical Method:	48,TO-15-SIM		
Analytical Date:	07/16/15 16:36		
Analyst:	RY		

	ppbV			ug/m3				
Parameter	**Results**	**RL**	**MDL**	**Results**	**RL**	**MDL**	**Qualifier**	**Dilution Factor**
Volatile Organics in Air by SIM - Mansfield Lab								
Dichlorodifluoromethane	ND	0.200	--	ND	0.989	--		1
Chloromethane	ND	0.200	--	ND	0.413	--		1
1,2-Dichloro-1,1,2,2-tetrafluoroethane	ND	0.050	--	ND	0.349	--		1
Vinyl chloride	ND	0.020	--	ND	0.051	--		1
1,3-Butadiene	ND	0.020	--	ND	0.044	--		1
Bromomethane	ND	0.020	--	ND	0.078	--		1
Chloroethane	ND	0.020	--	ND	0.053	--		1
Acetone	ND	1.00	--	ND	2.38	--		1
Trichlorofluoromethane	ND	0.050	--	ND	0.281	--		1
Acrylonitrile	ND	0.500	--	ND	1.09	--		1
1,1-Dichloroethene	ND	0.020	--	ND	0.079	--		1
Methylene chloride	ND	0.500	--	ND	1.74	--		1
1,1,2-Trichloro-1,2,2-Trifluoroethane	ND	0.050	--	ND	0.383	--		1
Halothane	ND	0.050	--	ND	0.404	--		1
trans-1,2-Dichloroethene	ND	0.020	--	ND	0.079	--		1
1,1-Dichloroethane	ND	0.020	--	ND	0.081	--		1
Methyl tert butyl ether	ND	0.200	--	ND	0.721	--		1
2-Butanone	ND	0.500	--	ND	1.47	--		1
cis-1,2-Dichloroethene	ND	0.020	--	ND	0.079	--		1
Chloroform	ND	0.020	--	ND	0.098	--		1
1,2-Dichloroethane	ND	0.020	--	ND	0.081	--		1
1,1,1-Trichloroethane	ND	0.020	--	ND	0.109	--		1
Benzene	ND	0.100	--	ND	0.319	--		1
Carbon tetrachloride	ND	0.020	--	ND	0.126	--		1
1,2-Dichloropropane	ND	0.020	--	ND	0.092	--		1

Project Name:

Project Number: CANISTER QC BAT

Lab Number: L1516240

Report Date: 08/04/15

Air Canister Certification Results

Lab ID: L1516240-01
Client ID: CAN 1711 SHELF 37
Sample Location:

Date Collected: 07/14/15 18:00
Date Received: 07/15/15
Field Prep: Not Specified

Parameter	ppbV Results	ppbV RL	ppbV MDL	ug/m3 Results	ug/m3 RL	ug/m3 MDL	Qualifier	Dilution Factor
Volatile Organics in Air by SIM - Mansfield Lab								
Bromodichloromethane	ND	0.020	--	ND	0.134	--		1
1,4-Dioxane	ND	0.100	--	ND	0.360	--		1
Trichloroethene	ND	0.020	--	ND	0.107	--		1
cis-1,3-Dichloropropene	ND	0.020	--	ND	0.091	--		1
4-Methyl-2-pentanone	ND	0.500	--	ND	2.05	--		1
trans-1,3-Dichloropropene	ND	0.020	--	ND	0.091	--		1
1,1,2-Trichloroethane	ND	0.020	--	ND	0.109	--		1
Toluene	ND	0.050	--	ND	0.188	--		1
Dibromochloromethane	ND	0.020	--	ND	0.170	--		1
1,2-Dibromoethane	ND	0.020	--	ND	0.154	--		1
Tetrachloroethene	ND	0.020	--	ND	0.136	--		1
1,1,1,2-Tetrachloroethane	ND	0.020	--	ND	0.137	--		1
Chlorobenzene	ND	0.020	--	ND	0.092	--		1
Ethylbenzene	ND	0.020	--	ND	0.087	--		1
p/m-Xylene	ND	0.040	--	ND	0.174	--		1
Bromoform	ND	0.020	--	ND	0.207	--		1
Styrene	ND	0.020	--	ND	0.085	--		1
1,1,2,2-Tetrachloroethane	ND	0.020	--	ND	0.137	--		1
o-Xylene	ND	0.020	--	ND	0.087	--		1
Isopropylbenzene	ND	0.200	--	ND	0.983	--		1
4-Ethyltoluene	ND	0.020	--	ND	0.098	--		1
1,3,5-Trimethylbenzene	ND	0.020	--	ND	0.098	--		1
1,2,4-Trimethylbenzene	ND	0.020	--	ND	0.098	--		1
1,3-Dichlorobenzene	ND	0.020	--	ND	0.120	--		1
1,4-Dichlorobenzene	ND	0.020	--	ND	0.120	--		1
sec-Butylbenzene	ND	0.200	--	ND	1.10	--		1
p-Isopropyltoluene	ND	0.200	--	ND	1.10	--		1
1,2-Dichlorobenzene	ND	0.020	--	ND	0.120	--		1

Project Name:

Project Number: CANISTER QC BAT

Lab Number: L1516240

Report Date: 08/04/15

Air Canister Certification Results

Lab ID: L1516240-01
Client ID: CAN 1711 SHELF 37
Sample Location:

Date Collected: 07/14/15 18:00
Date Received: 07/15/15
Field Prep: Not Specified

Parameter	ppbV Results	ppbV RL	ppbV MDL	ug/m3 Results	ug/m3 RL	ug/m3 MDL	Qualifier	Dilution Factor
Volatile Organics in Air by SIM - Mansfield Lab								
n-Butylbenzene	ND	0.200	--	ND	1.10	--		1
1,2,4-Trichlorobenzene	ND	0.050	--	ND	0.371	--		1
Naphthalene	ND	0.050	--	ND	0.262	--		1
1,2,3-Trichlorobenzene	ND	0.050	--	ND	0.371	--		1
Hexachlorobutadiene	ND	0.050	--	ND	0.533	--		1

Internal Standard	% Recovery	Qualifier	Acceptance Criteria
1,4-difluorobenzene	91		60-140
bromochloromethane	90		60-140
chlorobenzene-d5	88		60-140

Project Name:

Project Number: CANISTER QC BAT

Lab Number: L1516634

Report Date: 08/04/15

Air Canister Certification Results

Lab ID:	L1516634-01	Date Collected:	07/16/15 18:00
Client ID:	CAN 185 SHELF 2	Date Received:	07/17/15
Sample Location:		Field Prep:	Not Specified
Matrix:	Air		
Anaytical Method:	48,TO-15		
Analytical Date:	07/17/15 18:40		
Analyst:	RY		

	ppbV			ug/m3				
Parameter	**Results**	**RL**	**MDL**	**Results**	**RL**	**MDL**	**Qualifier**	**Dilution Factor**
Volatile Organics in Air - Mansfield Lab								
Chlorodifluoromethane	ND	0.200	--	ND	0.707	--		1
Propylene	ND	0.500	--	ND	0.861	--		1
Propane	ND	0.500	--	ND	0.902	--		1
Dichlorodifluoromethane	ND	0.200	--	ND	0.989	--		1
Chloromethane	ND	0.200	--	ND	0.413	--		1
1,2-Dichloro-1,1,2,2-tetrafluoroethane	ND	0.200	--	ND	1.40	--		1
Methanol	ND	5.00	--	ND	6.55	--		1
Vinyl chloride	ND	0.200	--	ND	0.511	--		1
1,3-Butadiene	ND	0.200	--	ND	0.442	--		1
Butane	ND	0.200	--	ND	0.475	--		1
Bromomethane	ND	0.200	--	ND	0.777	--		1
Chloroethane	ND	0.200	--	ND	0.528	--		1
Ethyl Alcohol	ND	2.50	--	ND	4.71	--		1
Dichlorofluoromethane	ND	0.200	--	ND	0.842	--		1
Vinyl bromide	ND	0.200	--	ND	0.874	--		1
Acrolein	ND	0.500	--	ND	1.15	--		1
Acetone	ND	1.00	--	ND	2.38	--		1
Acetonitrile	ND	0.200	--	ND	0.336	--		1
Trichlorofluoromethane	ND	0.200	--	ND	1.12	--		1
iso-Propyl Alcohol	ND	0.500	--	ND	1.23	--		1
Acrylonitrile	ND	0.500	--	ND	1.09	--		1
Pentane	ND	0.200	--	ND	0.590	--		1
Ethyl ether	ND	0.200	--	ND	0.606	--		1
1,1-Dichloroethene	ND	0.200	--	ND	0.793	--		1
tert-Butyl Alcohol	ND	0.500	--	ND	1.52	--		1

Project Name:

Project Number: CANISTER QC BAT

Lab Number: L1516634

Report Date: 08/04/15

Air Canister Certification Results

Lab ID: L1516634-01
Client ID: CAN 185 SHELF 2
Sample Location:

Date Collected: 07/16/15 18:00
Date Received: 07/17/15
Field Prep: Not Specified

Parameter	ppbV Results	ppbV RL	ppbV MDL	ug/m3 Results	ug/m3 RL	ug/m3 MDL	Qualifier	Dilution Factor
Volatile Organics in Air - Mansfield Lab								
Methylene chloride	ND	0.500	--	ND	1.74	--		1
3-Chloropropene	ND	0.200	--	ND	0.626	--		1
Carbon disulfide	ND	0.200	--	ND	0.623	--		1
1,1,2-Trichloro-1,2,2-Trifluoroethane	ND	0.200	--	ND	1.53	--		1
trans-1,2-Dichloroethene	ND	0.200	--	ND	0.793	--		1
1,1-Dichloroethane	ND	0.200	--	ND	0.809	--		1
Methyl tert butyl ether	ND	0.200	--	ND	0.721	--		1
Vinyl acetate	ND	1.00	--	ND	3.52	--		1
2-Butanone	ND	0.500	--	ND	1.47	--		1
cis-1,2-Dichloroethene	ND	0.200	--	ND	0.793	--		1
Ethyl Acetate	ND	0.500	--	ND	1.80	--		1
Chloroform	ND	0.200	--	ND	0.977	--		1
Tetrahydrofuran	ND	0.500	--	ND	1.47	--		1
2,2-Dichloropropane	ND	0.200	--	ND	0.924	--		1
1,2-Dichloroethane	ND	0.200	--	ND	0.809	--		1
n-Hexane	ND	0.200	--	ND	0.705	--		1
Isopropyl Ether	ND	0.200	--	ND	0.836	--		1
Ethyl-Tert-Butyl-Ether	ND	0.200	--	ND	0.836	--		1
1,1,1-Trichloroethane	ND	0.200	--	ND	1.09	--		1
1,1-Dichloropropene	ND	0.200	--	ND	0.908	--		1
Benzene	ND	0.200	--	ND	0.639	--		1
Carbon tetrachloride	ND	0.200	--	ND	1.26	--		1
Cyclohexane	ND	0.200	--	ND	0.688	--		1
Tertiary-Amyl Methyl Ether	ND	0.200	--	ND	0.836	--		1
Dibromomethane	ND	0.200	--	ND	1.42	--		1
1,2-Dichloropropane	ND	0.200	--	ND	0.924	--		1
Bromodichloromethane	ND	0.200	--	ND	1.34	--		1
1,4-Dioxane	ND	0.200	--	ND	0.721	--		1

Project Name:

Project Number: CANISTER QC BAT

Lab Number: L1516634

Report Date: 08/04/15

Air Canister Certification Results

Lab ID: L1516634-01
Client ID: CAN 185 SHELF 2
Sample Location:

Date Collected: 07/16/15 18:00
Date Received: 07/17/15
Field Prep: Not Specified

Parameter	ppbV Results	ppbV RL	ppbV MDL	ug/m3 Results	ug/m3 RL	ug/m3 MDL	Qualifier	Dilution Factor
Volatile Organics in Air - Mansfield Lab								
Trichloroethene	ND	0.200	--	ND	1.07	--		1
2,2,4-Trimethylpentane	ND	0.200	--	ND	0.934	--		1
Methyl Methacrylate	ND	0.500	--	ND	2.05	--		1
Heptane	ND	0.200	--	ND	0.820	--		1
cis-1,3-Dichloropropene	ND	0.200	--	ND	0.908	--		1
4-Methyl-2-pentanone	ND	0.500	--	ND	2.05	--		1
trans-1,3-Dichloropropene	ND	0.200	--	ND	0.908	--		1
1,1,2-Trichloroethane	ND	0.200	--	ND	1.09	--		1
Toluene	ND	0.200	--	ND	0.754	--		1
1,3-Dichloropropane	ND	0.200	--	ND	0.924	--		1
2-Hexanone	ND	0.200	--	ND	0.820	--		1
Dibromochloromethane	ND	0.200	--	ND	1.70	--		1
1,2-Dibromoethane	ND	0.200	--	ND	1.54	--		1
Butyl Acetate	ND	0.500	--	ND	2.38	--		1
Octane	ND	0.200	--	ND	0.934	--		1
Tetrachloroethene	ND	0.200	--	ND	1.36	--		1
1,1,1,2-Tetrachloroethane	ND	0.200	--	ND	1.37	--		1
Chlorobenzene	ND	0.200	--	ND	0.921	--		1
Ethylbenzene	ND	0.200	--	ND	0.869	--		1
p/m-Xylene	ND	0.400	--	ND	1.74	--		1
Bromoform	ND	0.200	--	ND	2.07	--		1
Styrene	ND	0.200	--	ND	0.852	--		1
1,1,2,2-Tetrachloroethane	ND	0.200	--	ND	1.37	--		1
o-Xylene	ND	0.200	--	ND	0.869	--		1
1,2,3-Trichloropropane	ND	0.200	--	ND	1.21	--		1
Nonane (C9)	ND	0.200	--	ND	1.05	--		1
Isopropylbenzene	ND	0.200	--	ND	0.983	--		1
Bromobenzene	ND	0.200	--	ND	0.793	--		1

Project Name:

Project Number: CANISTER QC BAT

Lab Number: L1516634

Report Date: 08/04/15

Air Canister Certification Results

Lab ID: L1516634-01
Client ID: CAN 185 SHELF 2
Sample Location:

Date Collected: 07/16/15 18:00
Date Received: 07/17/15
Field Prep: Not Specified

Parameter	ppbV Results	ppbV RL	ppbV MDL	ug/m3 Results	ug/m3 RL	ug/m3 MDL	Qualifier	Dilution Factor
Volatile Organics in Air - Mansfield Lab								
o-Chlorotoluene	ND	0.200	--	ND	1.04	--		1
n-Propylbenzene	ND	0.200	--	ND	0.983	--		1
p-Chlorotoluene	ND	0.200	--	ND	1.04	--		1
4-Ethyltoluene	ND	0.200	--	ND	0.983	--		1
1,3,5-Trimethylbenzene	ND	0.200	--	ND	0.983	--		1
tert-Butylbenzene	ND	0.200	--	ND	1.10	--		1
1,2,4-Trimethylbenzene	ND	0.200	--	ND	0.983	--		1
Decane (C10)	ND	0.200	--	ND	1.16	--		1
Benzyl chloride	ND	0.200	--	ND	1.04	--		1
1,3-Dichlorobenzene	ND	0.200	--	ND	1.20	--		1
1,4-Dichlorobenzene	ND	0.200	--	ND	1.20	--		1
sec-Butylbenzene	ND	0.200	--	ND	1.10	--		1
p-Isopropyltoluene	ND	0.200	--	ND	1.10	--		1
1,2-Dichlorobenzene	ND	0.200	--	ND	1.20	--		1
n-Butylbenzene	ND	0.200	--	ND	1.10	--		1
1,2-Dibromo-3-chloropropane	ND	0.200	--	ND	1.93	--		1
Undecane	ND	0.200	--	ND	1.28	--		1
Dodecane (C12)	ND	0.200	--	ND	1.39	--		1
1,2,4-Trichlorobenzene	ND	0.200	--	ND	1.48	--		1
Naphthalene	ND	0.200	--	ND	1.05	--		1
1,2,3-Trichlorobenzene	ND	0.200	--	ND	1.48	--		1
Hexachlorobutadiene	ND	0.200	--	ND	2.13	--		1

	Results	Qualifier	Units	RDL	Dilution Factor
Tentatively Identified Compounds					
No Tentatively Identified Compounds					

Project Name:

Project Number: CANISTER QC BAT

Lab Number: L1516634

Report Date: 08/04/15

Air Canister Certification Results

Lab ID:	L1516634-01	Date Collected:	07/16/15 18:00
Client ID:	CAN 185 SHELF 2	Date Received:	07/17/15
Sample Location:		Field Prep:	Not Specified

	ppbV			ug/m3				
Parameter	**Results**	**RL**	**MDL**	**Results**	**RL**	**MDL**	**Qualifier**	**Dilution Factor**
Volatile Organics in Air - Mansfield Lab								

Internal Standard	**% Recovery**	**Qualifier**	**Acceptance Criteria**
1,4-Difluorobenzene	98		60-140
Bromochloromethane	95		60-140
chlorobenzene-d5	98		60-140

Project Name:

Project Number: CANISTER QC BAT

Lab Number: L1516634

Report Date: 08/04/15

Air Canister Certification Results

Lab ID:	L1516634-01	Date Collected:	07/16/15 18:00
Client ID:	CAN 185 SHELF 2	Date Received:	07/17/15
Sample Location:		Field Prep:	Not Specified
Matrix:	Air		
Anaytical Method:	48,TO-15-SIM		
Analytical Date:	07/17/15 18:40		
Analyst:	RY		

	ppbV			ug/m3				
Parameter	**Results**	**RL**	**MDL**	**Results**	**RL**	**MDL**	**Qualifier**	**Dilution Factor**
Volatile Organics in Air by SIM - Mansfield Lab								
Dichlorodifluoromethane	ND	0.200	--	ND	0.989	--		1
Chloromethane	ND	0.200	--	ND	0.413	--		1
1,2-Dichloro-1,1,2,2-tetrafluoroethane	ND	0.050	--	ND	0.349	--		1
Vinyl chloride	ND	0.020	--	ND	0.051	--		1
1,3-Butadiene	ND	0.020	--	ND	0.044	--		1
Bromomethane	ND	0.020	--	ND	0.078	--		1
Chloroethane	ND	0.020	--	ND	0.053	--		1
Acetone	ND	1.00	--	ND	2.38	--		1
Trichlorofluoromethane	ND	0.050	--	ND	0.281	--		1
Acrylonitrile	ND	0.500	--	ND	1.09	--		1
1,1-Dichloroethene	ND	0.020	--	ND	0.079	--		1
Methylene chloride	ND	0.500	--	ND	1.74	--		1
1,1,2-Trichloro-1,2,2-Trifluoroethane	ND	0.050	--	ND	0.383	--		1
Halothane	ND	0.050	--	ND	0.404	--		1
trans-1,2-Dichloroethene	ND	0.020	--	ND	0.079	--		1
1,1-Dichloroethane	ND	0.020	--	ND	0.081	--		1
Methyl tert butyl ether	ND	0.200	--	ND	0.721	--		1
2-Butanone	ND	0.500	--	ND	1.47	--		1
cis-1,2-Dichloroethene	ND	0.020	--	ND	0.079	--		1
Chloroform	ND	0.020	--	ND	0.098	--		1
1,2-Dichloroethane	ND	0.020	--	ND	0.081	--		1
1,1,1-Trichloroethane	ND	0.020	--	ND	0.109	--		1
Benzene	ND	0.100	--	ND	0.319	--		1
Carbon tetrachloride	ND	0.020	--	ND	0.126	--		1
1,2-Dichloropropane	ND	0.020	--	ND	0.092	--		1

Project Name:

Project Number: CANISTER QC BAT

Lab Number: L1516634

Report Date: 08/04/15

Air Canister Certification Results

Lab ID: L1516634-01
Client ID: CAN 185 SHELF 2
Sample Location:

Date Collected: 07/16/15 18:00
Date Received: 07/17/15
Field Prep: Not Specified

Parameter	ppbV Results	ppbV RL	ppbV MDL	ug/m3 Results	ug/m3 RL	ug/m3 MDL	Qualifier	Dilution Factor
Volatile Organics in Air by SIM - Mansfield Lab								
Bromodichloromethane	ND	0.020	--	ND	0.134	--		1
1,4-Dioxane	ND	0.100	--	ND	0.360	--		1
Trichloroethene	ND	0.020	--	ND	0.107	--		1
cis-1,3-Dichloropropene	ND	0.020	--	ND	0.091	--		1
4-Methyl-2-pentanone	ND	0.500	--	ND	2.05	--		1
trans-1,3-Dichloropropene	ND	0.020	--	ND	0.091	--		1
1,1,2-Trichloroethane	ND	0.020	--	ND	0.109	--		1
Toluene	ND	0.050	--	ND	0.188	--		1
Dibromochloromethane	ND	0.020	--	ND	0.170	--		1
1,2-Dibromoethane	ND	0.020	--	ND	0.154	--		1
Tetrachloroethene	ND	0.020	--	ND	0.136	--		1
1,1,1,2-Tetrachloroethane	ND	0.020	--	ND	0.137	--		1
Chlorobenzene	ND	0.020	--	ND	0.092	--		1
Ethylbenzene	ND	0.020	--	ND	0.087	--		1
p/m-Xylene	ND	0.040	--	ND	0.174	--		1
Bromoform	ND	0.020	--	ND	0.207	--		1
Styrene	ND	0.020	--	ND	0.085	--		1
1,1,2,2-Tetrachloroethane	ND	0.020	--	ND	0.137	--		1
o-Xylene	ND	0.020	--	ND	0.087	--		1
Isopropylbenzene	ND	0.200	--	ND	0.983	--		1
4-Ethyltoluene	ND	0.020	--	ND	0.098	--		1
1,3,5-Trimethylbenzene	ND	0.020	--	ND	0.098	--		1
1,2,4-Trimethylbenzene	ND	0.020	--	ND	0.098	--		1
1,3-Dichlorobenzene	ND	0.020	--	ND	0.120	--		1
1,4-Dichlorobenzene	ND	0.020	--	ND	0.120	--		1
sec-Butylbenzene	ND	0.200	--	ND	1.10	--		1
p-Isopropyltoluene	ND	0.200	--	ND	1.10	--		1
1,2-Dichlorobenzene	ND	0.020	--	ND	0.120	--		1

Project Name:

Project Number: CANISTER QC BAT

Lab Number: L1516634

Report Date: 08/04/15

Air Canister Certification Results

Lab ID: L1516634-01
Client ID: CAN 185 SHELF 2
Sample Location:

Date Collected: 07/16/15 18:00
Date Received: 07/17/15
Field Prep: Not Specified

	ppbV			ug/m3				
Parameter	**Results**	**RL**	**MDL**	**Results**	**RL**	**MDL**	**Qualifier**	**Dilution Factor**
Volatile Organics in Air by SIM - Mansfield Lab								
n-Butylbenzene	ND	0.200	--	ND	1.10	--		1
1,2,4-Trichlorobenzene	ND	0.050	--	ND	0.371	--		1
Naphthalene	ND	0.050	--	ND	0.262	--		1
1,2,3-Trichlorobenzene	ND	0.050	--	ND	0.371	--		1
Hexachlorobutadiene	ND	0.050	--	ND	0.533	--		1

Internal Standard	**% Recovery**	**Qualifier**	**Acceptance Criteria**
1,4-difluorobenzene	99		60-140
bromochloromethane	98		60-140
chlorobenzene-d5	97		60-140

Project Name: NBHS
Project Number: 115058

Lab Number: L1517539
Report Date: 08/04/15

Sample Receipt and Container Information

Were project specific reporting limits specified? YES

Reagent H2O Preserved Vials Frozen on: NA

Cooler Information **Custody Seal**

Cooler	
N/A	Present/Intact

Container Information

Container ID	Container Type	Cooler	pH	Temp deg C	Pres	Seal	Analysis(*)
L1517539-01A	Canister - 6 Liter	N/A	N/A	N/A	Y	Absent	MCP-TO15-SIM(30)
L1517539-02A	Canister - 6 Liter	N/A	N/A	N/A	Y	Absent	MCP-TO15-SIM(30)
L1517539-03A	Canister - 6 Liter	N/A	N/A	N/A	Y	Absent	MCP-TO15-SIM(30)
L1517539-04A	Canister - 2.7 Liter	N/A	N/A	N/A	Y	Absent	MCP-TO15-SIM(30)

*Values in parentheses indicate holding time in days

Project Name:	NBHS	**Lab Number:**	L1517539
Project Number:	115058	**Report Date:**	08/04/15

GLOSSARY

Acronyms

EDL	- Estimated Detection Limit: This value represents the level to which target analyte concentrations are reported as estimated values, when those target analyte concentrations are quantified below the reporting limit (RL). The EDL includes any adjustments from dilutions, concentrations or moisture content, where applicable. The use of EDLs is specific to the analysis of PAHs using Solid-Phase Microextraction (SPME).
EPA	- Environmental Protection Agency.
LCS	- Laboratory Control Sample: A sample matrix, free from the analytes of interest, spiked with verified known amounts of analytes or a material containing known and verified amounts of analytes.
LCSD	- Laboratory Control Sample Duplicate: Refer to LCS.
LFB	- Laboratory Fortified Blank: A sample matrix, free from the analytes of interest, spiked with verified known amounts of analytes or a material containing known and verified amounts of analytes.
MDL	- Method Detection Limit: This value represents the level to which target analyte concentrations are reported as estimated values, when those target analyte concentrations are quantified below the reporting limit (RL). The MDL includes any adjustments from dilutions, concentrations or moisture content, where applicable.
MS	- Matrix Spike Sample: A sample prepared by adding a known mass of target analyte to a specified amount of matrix sample for which an independent estimate of target analyte concentration is available.
MSD	- Matrix Spike Sample Duplicate: Refer to MS.
NA	- Not Applicable.
NC	- Not Calculated: Term is utilized when one or more of the results utilized in the calculation are non-detect at the parameter's reporting unit.
NI	- Not Ignitable.
NP	- Non-Plastic: Term is utilized for the analysis of Atterberg Limits in soil.
RL	- Reporting Limit: The value at which an instrument can accurately measure an analyte at a specific concentration. The RL includes any adjustments from dilutions, concentrations or moisture content, where applicable.
RPD	- Relative Percent Difference: The results from matrix and/or matrix spike duplicates are primarily designed to assess the precision of analytical results in a given matrix and are expressed as relative percent difference (RPD). Values which are less than five times the reporting limit for any individual parameter are evaluated by utilizing the absolute difference between the values; although the RPD value will be provided in the report.
SRM	- Standard Reference Material: A reference sample of a known or certified value that is of the same or similar matrix as the associated field samples.
TIC	- Tentatively Identified Compound: A compound that has been identified to be present and is not part of the target compound list (TCL) for the method and/or program. All TICs are qualitatively identified and reported as estimated concentrations.

Footnotes

1	- The reference for this analyte should be considered modified since this analyte is absent from the target analyte list of the original method.

Terms

Total: With respect to Organic analyses, a 'Total' result is defined as the summation of results for individual isomers or Aroclors. If a 'Total' result is requested, the results of its individual components will also be reported. This is applicable to 'Total' results for methods 8260, 8081 and 8082.

Analytical Method: Both the document from which the method originates and the analytical reference method. (Example: EPA 8260B is shown as 1,8260B.) The codes for the reference method documents are provided in the References section of the Addendum.

Data Qualifiers

A	- Spectra identified as "Aldol Condensation Product".
B	- The analyte was detected above the reporting limit in the associated method blank. Flag only applies to associated field samples that have detectable concentrations of the analyte at less than ten times (10x) the concentration found in the blank. For MCP-related projects, flag only applies to associated field samples that have detectable concentrations of the analyte at less than ten times (10x) the concentration found in the blank. For DOD-related projects, flag only applies to associated field samples that have detectable concentrations of the analyte at less than ten times (10x) the concentration found in the blank AND the analyte was detected above one-half the reporting limit (or above the reporting limit for common lab contaminants) in the associated method blank. For NJ-Air-related projects, flag only applies to associated field samples that have detectable concentrations of the analyte above the reporting limit. For NJ-related projects (excluding Air), flag only applies to associated field samples that have detectable concentrations of the analyte, which was detected above the reporting limit in the associated method blank or above five times the reporting limit for common lab contaminants (Phthalates, Acetone, Methylene Chloride, 2-Butanone).
C	- Co-elution: The target analyte co-elutes with a known lab standard (i.e. surrogate, internal standards, etc.) for co-extracted analyses.

Report Format: Data Usability Report

Project Name: NBHS **Lab Number:** L1517539

Project Number: 115058 **Report Date:** 08/04/15

Data Qualifiers

D - Concentration of analyte was quantified from diluted analysis. Flag only applies to field samples that have detectable concentrations of the analyte.

E - Concentration of analyte exceeds the range of the calibration curve and/or linear range of the instrument.

G - The concentration may be biased high due to matrix interferences (i.e, co-elution) with non-target compound(s). The result should be considered estimated.

H - The analysis of pH was performed beyond the regulatory-required holding time of 15 minutes from the time of sample collection.

I - The lower value for the two columns has been reported due to obvious interference.

M - Reporting Limit (RL) exceeds the MCP CAM Reporting Limit for this analyte.

NJ - Presumptive evidence of compound. This represents an estimated concentration for Tentatively Identified Compounds (TICs), where the identification is based on a mass spectral library search.

P - The RPD between the results for the two columns exceeds the method-specified criteria.

Q - The quality control sample exceeds the associated acceptance criteria. For DOD-related projects, LCS and/or Continuing Calibration Standard exceedences are also qualified on all associated sample results. Note: This flag is not applicable for matrix spike recoveries when the sample concentration is greater than 4x the spike added or for batch duplicate RPD when the sample concentrations are less than 5x the RL. (Metals only.)

R - Analytical results are from sample re-analysis.

RE - Analytical results are from sample re-extraction.

S - Analytical results are from modified screening analysis.

J - Estimated value. This represents an estimated concentration for Tentatively Identified Compounds (TICs).

ND - Not detected at the reporting limit (RL) for the sample.

Report Format: Data Usability Report

Project Name: NBHS
Project Number: 115058
Lab Number: L1517539
Report Date: 08/04/15

REFERENCES

101 Compendium of Methods for the Determination of Toxic Organic Compounds in Ambient Air (EPA/625/R-96/010b:January 1999) with QC Requirements & Performance Standards for the Analysis of TO-15 under the Massachusetts Contingency Plan, WSC-CAM-IXB, July 2010.

LIMITATION OF LIABILITIES

Alpha Analytical performs services with reasonable care and diligence normal to the analytical testing laboratory industry. In the event of an error, the sole and exclusive responsibility of Alpha Analytical shall be to re-perform the work at it's own expense. In no event shall Alpha Analytical be held liable for any incidental, consequential or special damages, including but not limited to, damages in any way connected with the use of, interpretation of, information or analysis provided by Alpha Analytical.

We strongly urge our clients to comply with EPA protocol regarding sample volume, preservation, cooling, containers, sampling procedures, holding time and splitting of samples in the field.

Certification Information

Last revised December 16, 2014

The following analytes are not included in our NELAP Scope of Accreditation:

Westborough Facility
EPA 524.2: Acetone, 2-Butanone (Methyl ethyl ketone (MEK)), Tert-butyl alcohol, 2-Hexanone, Tetrahydrofuran, 1,3,5-Trichlorobenzene, 4-Methyl-2-pentanone (MIBK), Carbon disulfide, Diethyl ether.
EPA 8260C: 1,2,4,5-Tetramethylbenzene, 4-Ethyltoluene, Iodomethane (methyl iodide), Methyl methacrylate, Azobenzene.
EPA 8270D: 1-Methylnaphthalene, Dimethylnaphthalene,1,4-Diphenylhydrazine.
EPA 625: 4-Chloroaniline, 4-Methylphenol.
SM4500: Soil: Total Phosphorus, TKN, NO2, NO3.
EPA 9071: Total Petroleum Hydrocarbons, Oil & Grease.

Mansfield Facility
EPA 8270D: Biphenyl.
EPA 2540D: TSS
EPA TO-15: Halothane, 2,4,4-Trimethyl-2-pentene, 2,4,4-Trimethyl-1-pentene, Thiophene, 2-Methylthiophene, 3-Methylthiophene, 2-Ethylthiophene, 1,2,3-Trimethylbenzene, Indan, Indene, 1,2,4,5-Tetramethylbenzene, Benzothiophene, 1-Methylnaphthalene.

The following analytes are included in our Massachusetts DEP Scope of Accreditation, Westborough Facility:

Drinking Water
EPA 200.8: Sb,As,Ba,Be,Cd,Cr,Cu,Pb,Ni,Se,Tl; **EPA 200.7**: Ba,Be,Ca,Cd,Cr,Cu,Na; **EPA 245.1:** Mercury;
EPA 300.0: Nitrate-N, Fluoride, Sulfate; **EPA 353.2**: Nitrate-N, Nitrite-N; **SM4500NO3-F**: Nitrate-N, Nitrite-N; **SM4500F-C, SM4500CN-CE, EPA 180.1, SM2130B, SM4500Cl-D, SM2320B, SM2540C, SM4500H-B**
EPA 332: Perchlorate.
Microbiology: **SM9215B; SM9223-P/A, SM9223B-Colilert-QT, Enterolert-QT.**

Non-Potable Water
EPA 200.8: Al,Sb,As,Be,Cd,Cr,Cu,Pb,Mn,Ni,Se,Ag,Tl,Zn;
EPA 200.7: Al,Sb,As,Be,Cd,Ca,Cr,Co,Cu,Fe,Pb,Mg,Mn,Mo,Ni,K,Se,Ag,Na,Sr,Ti,Tl,V,Zn;
EPA 245.1, SM4500H,B, EPA 120.1, SM2510B, SM2540C, SM2340B, SM2320B, SM4500CL-E, SM4500F-BC, SM426C, SM4500NH3-BH, **EPA 350.1**: Ammonia-N, **LACHAT 10-107-06-1-B**: Ammonia-N, **SM4500NO3-F,**
EPA 353.2: Nitrate-N**, SM4500NH3-BC-NES, EPA 351.1, SM4500P-E, SM4500P-B, E, SM5220D, EPA 410.4, SM5210B, SM5310C, SM4500CL-D, EPA 1664, SM14 510AC, EPA 420.1, SM4500-CN-CE, SM2540D.**
EPA 624: Volatile Halocarbons & Aromatics,
EPA 608: Chlordane, Toxaphene, Aldrin, alpha-BHC, beta-BHC, gamma-BHC, delta-BHC, Dieldrin, DDD, DDE, DDT, Endosulfan I, Endosulfan II, Endosulfan sulfate, Endrin, Endrin Aldehyde, Heptachlor, Heptachlor Epoxide, PCBs
EPA 625: SVOC (Acid/Base/Neutral Extractables), **EPA 600/4-81-045**: PCB-Oil.
Microbiology: **SM9223B-Colilert-QT; Enterolert-QT, SM9222D-MF**.

For a complete listing of analytes and methods, please contact your Alpha Project Manager.

AIR ANALYSIS

PAGE 1 OF 1

CHAIN OF CUSTODY

ALPHA ANALYTICAL
320 Forbes Blvd, Mansfield, MA 02048
TEL: 508-822-9300 FAX: 508-822-3288

Date Rec'd in Lab: 7/28/15

ALPHA Job #: L1517539

Client Information

Client: TRC
Address: 650 SUFFOLK ST
LOWELL MA
Phone: 978-970-5600
Fax:
Email: DSULLIVAN@TRCSOLUTIONS.COM
☐ These samples have been previously analyzed by Alpha

Project Information

Project Name: NBHS
Project Location: NEW BEDFORD
Project #: 115058
Project Manager:
ALPHA Quote #:

Turn-Around Time

☑ Standard ☐ RUSH (only confirmed if pre-approved!)
5-DAY
Date Due: 8/4/15 Time:

Report Information - Data Deliverables

☐ FAX
☑ ADEx
Criteria Checker:
(Default based on Regulatory Criteria Indicated)
Other Formats:
☑ EMAIL (standard pdf report)
☐ Additional Deliverables:
Report to: (if different than Project Manager)

Billing Information

☐ Same as Client info PO #: 82341

Regulatory Requirements/Report Limits

State/Fed	Program	Criteria

Other Project Specific Requirements/Comments:

All Columns Below Must Be Filled Out

ALPHA Lab ID (Lab Use Only)	Sample ID	Collection Date	Start Time	End Time	Initial Vacuum	Final Vacuum	Sample Matrix*	Sampler's Initials	Can Size	I D Can	I D - Flow Controller	TO-14A by TO-15	TO-15	TO-15 SIM	APH	FIXED GASES	TO-13A	TO-4 / TO-10	Sample Comments (i.e. PID)
17539-01	TRC IA-16	7/24-7/25	6:57	6:57	-30.3	-7.2	AA	JF	6l	2115	0147			✓					24 HR IAQ PID 0.1-0.2
-02	TRC IA-17	"	6:58	6:58	-30.4	-9.55	AA	JF	6l	1902	0618			✓					" " "
-03	TRC IA-4	"	7:00	7:00	-30.2	-9.25	AA	JF	6l	689	0619			✓					" " "
-04	PVP-6	7/27	9:27	10:05	-29.85	-2.25	SV	JF	2.7l	240	0336			✓					SOIL GAS 0-0.1 PPM

*SAMPLE MATRIX CODES
AA = Ambient Air (Indoor/Outdoor)
SV = Soil Vapor/Landfill Gas/SVE
Other = Please Specify

Container Type					CS			

Relinquished By:	Date/Time	Received By:	Date/Time:
Laura C. Fiore	7/28/15	[illegible] AAL	7/28/15 1030
[illegible]	7/28/15 11:15	[illegible]	7/28/15 11:15

Please print clearly, legibly and completely. Samples can not be logged in and turnaround time clock will not start until any ambiguities are resolved. All samples submitted are subject to Alpha's Terms and Conditions. See reverse side.

APPENDIX D

GROUNDWATER SAMPLING FORMS

TRC

Low-flow Groundwater Sampling Data Record

Project:	Project No.:	Date/Time:	Sheet 1 of 1
NDHS	115058	7-27-15 12:55	

TRC Personnel: Jaron Fiero

Well Identification: MW-32

WELL INTEGRITY

	YES	NO
Protect. Casing Secure	✓	
Concrete Collar Intact	✓	
PVC Stick-up Intact		
Well Cap Present		
Security Lock Present		

Protective Casing Stick-up (from ground) — ft.

Riser Stick-up (from ground) — ft.

WELL DIAMETER: ☐ 2 inch ☐ 4 inch ☐ 6 inch ☑ 1"

WELL MATERIAL: ☑ PVC ☐ SS ☐ ___

Well Depth 8.4 ft. ☑ top of riser ☑ top of casing ☐ measured ☑ historical

Water Depth 2.9 ft.

LNAPL/DNAPL Depth = N/D

Thickness = N/A

LOW FLOW DATA

Depth of pump intake: 7

Static water level after pump put into well: 2.9

Initial purge Rate/ Water Level (100-400 ml/min): 80 ml/min

Adjusted purge Rates/time/WL(record changes): 80

Total Purged

Flow rate at time of sampling: 80 ml/min

PID SCREENING MEAS.

Background	0
Well Mouth	0

FIELD WATER QUALITY MEASUREMENTS (record at 3-5 minute intervals)

Time	12:30	12:35	12:40	12:45	12:50	12:55				
Temp. (C)	25.19	25.18	25.21	25.21	25.22					
Sp. Cond. (µmhos/cm)	578	576	575	575	5.75					
DO (mg/l)	0.33	0.24	0.18	0.16	0.14					
pH (Std. Units)	6.70	6.69	6.69	6.69	6.69					
Eh/ORP (millivolts)	-99	-102	-105	-102	-102					
Turb. (NTU)	4.33	2.44	2.49	1.95	1.75					
Flow (ml/min)	80	→	→	→	→					
Depth To Water (ft)	2.9	2.9	2.9	2.9	2.9					

Time							
Temp. (C)							
Conduct. (µmhos/cm)							
DO (mg/l)							
pH (Std. Units)							
Eh/ORP (millivolts)							
Turb. (NTU)							
Flow (ml/min)							
Depth To Water (ft)							

Stabilization Criteria* (3 consecutive readings)

- Temperature: +/- 3 %
- Sp. Cond. (µmhos/cm): +/- 3 %
- DO (mg/l): +/- 10 % (for values >0.5 mg/L)
- pH (Std. Units): +/- 0.1 SU
- Eh/ORP (millivolts): +/- 10 mV
- Turbidity (NTU): +/- 10 % (for values >5.0 NTUs)
- Drawdown: 0.3 ft (can be greater as long as WL is stable)

Pump Type	Purge	Sample
Peristaltic Pump	✓	✓
Submersible Pump		
Bladder Pump		
Other:		

Description of Sampling Equipment and Flow Rate: Geotech Peristaltic Pump VSI 600XL / LA Motte 2020

Analytical Parameter	Filtered (Y/N)	Preservation	Volume	Time Collected	QC	Sample #
VOC.	N	HCL	3-40 ml	12:55	-	MW-32
PCB	N	none	2x 1l	12:55	-	MW-32

* USEPA Region 1 Low-Stress (Low-Flow) SOP, January 19, 2010 (EQASOP-GW-001).

Signed: J.C.F.

Rev. March 2012

TRC

Low-flow Groundwater Sampling Data Record

Project:	Project No.:	Date/Time:	Sheet 1 of 1
NBHS	115058	7/27/15 13:00	

TRC Personnel: Jason Fiero

Well Identification: MW-28

WELL INTEGRITY

	YES	NO
Protect. Casing Secure	✓	
Concrete Collar Intact	✓	
PVC Stick-up Intact		
Well Cap Present		
Security Lock Present		

Protective Casing Stick-up (from ground) — ft.

Riser Stick-up (from ground) — ft.

WELL DIAMETER: 2 inch / 4 inch / 6 inch / ✓ 1"

WELL MATERIAL: ✓ PVC / SS / ___

Well Depth 16.8 ft. ✓ top of riser / top of casing / measured / ✓ historical

Water Depth 2.95 ft.

LNAPL/DNAPL Depth = N/D

Thickness = N/A

LOW FLOW DATA

Depth of pump intake: 13.5

Static water level after pump put into well: 65 ml/min

Initial purge Rate/ Water Level (100-400 ml/min): 25 → 35

Adjusted purge Rates/time/WL(record changes): 35

Total Purged

Flow rate at time of sampling: 65 ml/min

PID SCREENING MEAS.

Background	0
Well Mouth	0.0

FIELD WATER QUALITY MEASUREMENTS (record at 3-5 minute intervals)

Time	11:20	11:27	11:33	11:40	11:46	11:57	12:00	12:10	12:20	12:30
Temp. (C)	28.81	26.87	26.89	26.89	26.88	26.82	26.79	26.83	26.71	26.65
Sp. Cond. (µmhos/cm)	387	370	367	359	356	352	350	348	342	339
DO (mg/l)	0.95	0.79	0.70	0.59	0.49	0.43	0.40	0.37	0.33	0.34
pH (Std. Units)	6.56	6.29	6.24	6.19	6.18	6.17	6.16	6.17	6.16	6.16
Eh/ORP (millivolts)	-22.9	-33.0	-35.7	-43.3	-43.6	-47.5	-42.3	-47.8	-52.4	-55.0
Turb. (NTU)	182	127	106	83.6	97.8	58.2	51.3	43.4	31.3	28.7
Flow (ml/min)	25	35	35	35	35	35	35	35	35	35
Depth To Water (ft)	2.95	2.96	2.95	2.96	2.96	2.95	2.96	2.96	2.94	2.94

Time	12:37	12:45	12:53	13:00
Temp. (C)	26.65	26.66	26.67	
Conduct. (µmhos/cm)	337	331	330	
DO (mg/l)	0.32	0.29	0.30	
pH (Std. Units)	6.16	6.16	6.16	
Eh/ORP (millivolts)	-51.3	-47.9	-47.3	
Turb. (NTU)	24.6	23.0	21.6	
Flow (ml/min)	35	35	35	
Depth To Water (ft)	2.94	2.95	2.95	

Stabilization Criteria* (3 consecutive readings)

- Temperature: +/- 3 %
- Sp. Cond. (µmhos/cm): +/- 3 %
- DO (mg/l): +/- 10 % (for values >0.5 mg/L)
- pH (Std. Units): +/- 0.1 SU
- Eh/ORP (millivolts): +/- 10 mV
- Turbidity (NTU): +/- 10 % (for values >5.0 NTUs)
- Drawdown: 0.3 ft (can be greater as long as WL is stable)

Pump Type	Purge	Sample
Peristaltic Pump		
Submersible Pump		
Bladder Pump	✓	✓
Other:		

Description of Sampling Equipment and Flow Rate: QED Mini Bladder Pump / Micro N2; YSI 600 XL / La Motte 2020

Analytical Parameter	Filtered (Y/N)	Preservation	Volume	Time Collected	QC	Sample #
VOC	N	HCL	3x40 ml	13:00	-	MW-28
PCB	Y	none	2x1L	13:00	-	MW-28
PCB	N	none	2x1L	13:00	-	MW-28

* USEPA Region 1 Low-Stress (Low-Flow) SOP, January 19, 2010 (EQASOP-GW-001).

Signed: JCF for CO.

Rev. March 2012

TRC

Low-flow Groundwater Sampling Data Record

Project:	Project No.:	Date/Time:	Sheet 1 of 1
NBHS	115058	7-27-15 11:30	

TRC Personnel: Jason Fiero

Well Identification: MW-42R

WELL INTEGRITY

	YES	NO
Protect. Casing Secure	✓	
Concrete Collar Intact	✓	
PVC Stick-up Intact		
Well Cap Present		
Security Lock Present		

Protective Casing Stick-up (from ground) — ft.

Riser Stick-up (from ground) — ft.

WELL DIAMETER: 2 inch / ✓ 4 inch / 6 inch

WELL MATERIAL: ✓ PVC / SS

Well Depth 12 ft. — ✓ top of riser / top of casing — measured / ✓ historical

Water Depth 3.1 ft.

LNAPL/DNAPL Depth = N/D

Thickness = N/A

LOW FLOW DATA

Depth of pump intake: 10'

Static water level after pump put into well: 3.1

Initial purge Rate/ Water Level (100-400 ml/min): 250 ml/min

Adjusted purge Rates/time/WL(record changes): 250

Total Purged

Flow rate at time of sampling: 250 ml/min

PID SCREENING MEAS.

Background	0
Well Mouth	0.1

FIELD WATER QUALITY MEASUREMENTS (record at 3-5 minute intervals)

Time	11:05	11:10	11:15	11:20	11:25	11:30				
Temp. (C)	25.02	25.09	25.17	25.22	25.23					
Sp. Cond. (µmhos/cm)	513	514	513	513	512					
DO (mg/l)	0.24	0.22	0.19	0.18	0.17					
pH (Std. Units)	6.78	6.81	6.84	6.84	6.85					
Eh/ORP (millivolts)	286.4	289.0	292.2	297.1	299.0					
Turb. (NTU)	4.63	4.81	4.4	2.95	2.44					
Flow (ml/min)	250 →									
Depth To Water (ft)	3.1	3.1	3.1	3.1	3.1					
Time										
Temp. (C)										
Conduct. (µmhos/cm)										
DO (mg/l)										
pH (Std. Units)										
Eh/ORP (millivolts)										
Turb. (NTU)										
Flow (ml/min)										
Depth To Water (ft)										

Stabilization Criteria*
(3 consecutive readings)

- Temperature: +/- 3 %
- Sp. Cond. (µmhos/cm): +/- 3 %
- DO (mg/l): +/- 10 % (for values >0.5 mg/L)
- pH (Std. Units): +/- 0.1 SU
- Eh/ORP (millivolts): +/- 10 mV
- Turbidity (NTU): +/- 10 % (for values >5.0 NTUs)
- Drawdown: 0.3 ft (can be greater as long as WL is stable)

Pump Type	Purge	Sample
Peristaltic Pump	✓	✓
Submersible Pump		
Bladder Pump		
Other:		

Description of Sampling Equipment and Flow Rate: Geotech Peristaltic Pump VSI 600XL/LA Mette 2020

Analytical Parameter	Filtered (Y/N)	Preservation	Volume	Time Collected	QC	Sample #
VOC.	N	HCL	3x40ml	11:30	DUP	MW-42
PCB.	Y	none	2X1l	11:30	DUP	MW-42
PCB.	N	None	2x 1L	11:30	DUP	MW-42

* USEPA Region 1 Low-Stress (Low-Flow) SOP, January 19, 2010 (EQASOP-GW-001).

Signed: [signature]

Rev. March 2012

TRC

Low-flow Groundwater Sampling Data Record

Project:	Project No.:	Date/Time:	Sheet 1 of 1
NBHS	115058	7-27-15 12:30	

TRC Personnel: Jason Fiero

Well Identification: MW-27R

WELL INTEGRITY

	YES	NO
Protect. Casing Secure	✓	
Concrete Collar Intact	✓	
PVC Stick-up Intact		
Well Cap Present		
Security Lock Present		

Protective Casing Stick-up (from ground): – ft.

Riser Stick-up (from ground): – ft.

WELL DIAMETER: 2 inch ☐ 4 inch ✓ 6 inch ☐

WELL MATERIAL: PVC ✓ SS ☐ ☐

Well Depth 9.5 ft. ✓ top of riser ☐ top of casing ☐ measured ✓ historical

Water Depth 2.8 ft. LNAPL/DNAPL Depth = N/D Thickness = N/A

LOW FLOW DATA

Depth of pump intake: 8

Static water level after pump put into well: 2.8

Initial purge Rate/ Water Level (100-400 ml/min): 250 ml/min

Adjusted purge Rates/time/WL(record changes): 250

Total Purged

Flow rate at time of sampling: 250 ml/min

PID SCREENING MEAS.

Background	0
Well Mouth	0.1

FIELD WATER QUALITY MEASUREMENTS (record at 3-5 minute intervals)

Time	12:05	12:10	12:15	12:20	12:25	12:30				
Temp. (C)	24.84	24.81	24.80	24.78	24.76					
Sp. Cond. (µmhos/cm)	535	532	526	530	531					
DO (mg/l)	0.58	0.17	0.15	0.14	0.13					
pH (Std. Units)	7.04	7.00	7.00	6.99	6.98					
Eh/ORP (millivolts)	-26	-80	-102	-112	-115					
Turb. (NTU)	4.17	3.28	2.61	2.42	2.28					
Flow (ml/min)	250	→								
Depth To Water (ft)	2.8	2.8	2.8	2.8	2.8					

Time							
Temp. (C)							
Conduct. (µmhos/cm)							
DO (mg/l)							
pH (Std. Units)							
Eh/ORP (millivolts)							
Turb. (NTU)							
Flow (ml/min)							
Depth To Water (ft)							

Stabilization Criteria* (3 consecutive readings)

- Temperature: +/- 3 %
- Sp. Cond. (µmhos/cm): +/- 3 %
- DO (mg/l): +/- 10 % (for values >0.5 mg/L)
- pH (Std. Units): +/- 0.1 SU
- Eh/ORP (millivolts): +/- 10 mV
- Turbidity (NTU): +/- 10 % (for values >5.0 NTUs)
- Drawdown: 0.3 ft (can be greater as long as WL is stable)

Pump Type	Purge	Sample
Peristaltic Pump	✓	✓
Submersible Pump		
Bladder Pump		
Other:		

Description of Sampling Equipment and Flow Rate: Geotech Peristaltic Pump VSI 600XL / LA Motte 2020

Analytical Parameter	Filtered (Y/N)	Preservation	Volume	Time Collected	QC	Sample #
VOC.	N	HCL	3X 40mL	12:30	–	MW-27R
PCB.	Y	none	2x 1L	12:30	–	MW-27R
PCB.	N	none	2x 1L	12:30	–	MW-27R

* USEPA Region 1 Low-Stress (Low-Flow) SOP, January 19, 2010 (EQASOP-GW-001).

Signed: JCF

Rev: March 2012

TRC

Low-flow Groundwater Sampling Data Record

Project:	Project No.:	Date/Time:	Sheet 1 of 1
NBHS	115058	7-27-15 16:30	

TRC Personnel: Jason Fiero

Well Identification: MW-41

WELL INTEGRITY

	YES	NO
Protect. Casing Secure	✓	
Concrete Collar Intact	✓	
PVC Stick-up Intact		
Well Cap Present		
Security Lock Present		

Protective Casing Stick-up (from ground) - ft.

Riser Stick-up (from ground) - ft.

WELL DIAMETER: 2 inch; 4 inch; 6 inch; ✓ 1"

WELL MATERIAL: ✓ PVC; SS; ___

Well Depth 11.25 ft. ✓ top of riser; top of casing; measured; ✓ historical

Water Depth 1.50 ft. LNAPL/DNAPL Depth = NO

Thickness = N/A

LOW FLOW DATA

Depth of pump intake: 9'

Static water level after pump put into well 2.9

Initial purge Rate/ Water Level (100-400 ml/min): 30 ml/min

Adjusted purge Rates/time/WL(record changes) 30

Total Purged

Flow rate at time of sampling: 30 ml/min

PID SCREENING MEAS.

Background	0
Well Mouth	0

FIELD WATER QUALITY MEASUREMENTS (record at 3-5 minute intervals)

Time	14:15	14:20	14:25	14:30	14:40	14:50	15:00	15:10	15:20	15:30
Temp. (C)	26.02	26.00	25.99	25.99	26.00	26.00	25.96	25.94	25.98	25.94
Sp. Cond. (µmhos/cm)	389	381	378	375	375	376	377	378	378	378
DO (mg/l)	0.85	0.39	0.28	0.20	0.16	0.09	0.08	0.07	0.04	0.04
pH (Std. Units)	6.28	6.25	6.25	6.24	6.23	6.24	6.24	6.24	6.24	6.24
Eh/ORP (millivolts)	0.9	-0.4	-1.2	5.5	6.5	5.0	0.2	-9	-16	-18.6
Turb. (NTU)	172	181	189	199	167	153	110	80	53	42.8
Flow (ml/min)										
Depth To Water (ft)	2.9	2.9	2.9	2.9	2.9	2.9	2.9	2.9	2.9	2.9

Time	15:40	15:50	16:00	16:10	16:20	16:30
Temp. (C)	25.95	25.99	25.98	25.98	25.97	
Conduct. (µmhos/cm)	380	380	381	381	380	
DO (mg/l)	0.04	0.05	0.05	0.05	0.05	
pH (Std. Units)	6.24	6.25	6.25	6.24	6.24	
Eh/ORP (millivolts)	20.4	22	23	24	24	
Turb. (NTU)	31.7	23	16	14	10	
Flow (ml/min)	30					
Depth To Water (ft)	2.9	2.9	2.9	2.9	2.9	

Stabilization Criteria* (3 consecutive readings)

- Temperature: +/- 3 %
- Sp. Cond. (µmhos/cm): +/- 3 %
- DO (mg/l): +/- 10 % (for values >0.5 mg/L)
- pH (Std. Units): +/- 0.1 SU
- Eh/ORP (millivolts): +/- 10 mV
- Turbidity (NTU): +/- 10 % (for values >5.0 NTUs)
- Drawdown: 0.3 ft (can be greater as long as WL is stable)

Pump Type	Purge	Sample
Peristaltic Pump		
Submersible Pump		
Bladder Pump	✓	✓
Other:		

Description of Sampling Equipment and Flow Rate: QED mini Bladder Pump / MP-10 N2

VSI 600XL / LA Motor 2020

Analytical Parameter	Filtered (Y/N)	Preservation	Volume	Time Collected	QC	Sample #
VOC	N	HCL	3x40ml	16:30		MW-41
PCB	Y	none	2x1L	16:30		MW-41
PCB	N	None	2x1L	16:30		MW-41

* USEPA Region 1 Low-Stress (Low-Flow) SOP, January 19, 2010 (EQASOP-GW-001).

Signed: JCF.

Rev: March 2012