CDM Smith Inc.
Consulting Engineers
260 West Exchange Street, Suite 300
Providence, Rhode Island 02903

Date Issued: February 26, 2015

TO: All Bidders of Record

RE: City of New Bedford, Massachusetts
Phase 1 – Coggeshall Street Sewer Separation
Bid No. 15439042
CWSRF 3858

Receipt of Bids: 3:00 PM, Thursday, March 5, 2015

This Addendum shall be part of the Contract Documents for the above referenced project.

Acknowledge receipt of this Addendum by inserting its number and date in the space provided on Page 00300-1 of the Bid Form. Failure to do so may subject the bidder to disqualification.

GENERAL

A. A pre-bid conference was held for Phase 1 - Coggeshall Street Sewer Separation Project on February 19, 2015. A copy of the sign-in sheet is attached for informational purposes.

B. During the pre-bid conference, questions were asked regarding the project. Answers to those questions are provided below.

C. Contracting party should consult the Secretary of State website

http://corp.sec.state.ma.us/corp/corpsearch/corpsearchinput.asp

to confirm legal existence of entities, print out documentation, and insert it in the front cover of the Contract. Check the Corporate Vote or LLC Certificate of Authority to be sure that the person executing the contract is authorized to contractually bind the entity.

GLOBAL

A. **DELETE** all occurrences of "Manual on Uniform Traffic Control Devices, 2000" or "MUTCD, 2000", "Manual on Uniform Traffic Control Devices, 2003", or "MUTCD 2003" and **INSERT** with "Manual on Uniform Traffic Control Devices, 2009" in its place.

SPECIFICATIONS

A. Table of Contents

1. **DELETE** the Table of Contents in its entirety and **INSERT** the attached new Table of Contents.

B. Section 00020 - Invitation to Bid

1. Page 00020-1 **DELETE** the second paragraph in its entirety and **INSERT** the following:

   "The work consists of wastewater system improvements to the City of New Bedford sewer system and installation of new drain, sewer, and water pipe for the purpose of sewer separation. The project consists of furnishing and installing approximately 3,650 linear feet of 8-in through 48-in drain pipe, approximately 2,000 linear feet of 8-in. through 24-in. sewer pipe, three pre-cast concrete structures, one cast-in-place structure, sewer and drain manholes, one inverted siphon drain crossing, removal and replacement of existing PCCP transmission main, and cutting and removal of abandoned, contaminated sewer pipeline prior to installation of new drain. All work also includes furnishing and installing approximately 2,650 linear feet of 6-in through 48-in water main, utility relocations, trenchless cured-in-place liner rehabilitation of existing sewers and drains, service connections, connections to the existing system, all earthwork, sheeting and bracing, dewatering and drainage, paving, restoration, traffic management, and all miscellaneous work and clean up as specified or required to complete the work."

2. Page 00020-2, DELETE the tenth paragraph and INSERT the following in its place:

   "Disadvantaged Business Enterprise (DBE) goals of the Commonwealth of Massachusetts and the City of New Bedford are applicable to the total dollars paid to the construction contract. The Commonwealth of Massachusetts goals for this project are a minimum of 3.40 percent D/MBE participation and 3.80 percent D/WBE participation by certified DBEs. **The City of New Bedford goals for this project are a minimum of 11.00 percent D/MBE participation and 5.00 percent D/WBE participation by certified DBEs. The higher of the two DBE participation goals shall govern. The City of New Bedford also has minimum goals for employment (workforce utilization) of 18.00 percent minority and 6.90 percent female participation and a goal of 50 percent of the total employee man-hours in each trade performed by residents of the City of New Bedford.** Bidders shall submit all required completed City of New Bedford forms and MassDEP DBE forms (EEO DEP 190, EEO-DEP-191 and the DBE Certification of United States Citizenship form) with their bid. Failure to comply with the requirements of this paragraph may be deemed to render a proposal non-responsive. No waiver of any provision of this section will be granted unless approved by the Department of Environmental Protection (MassDEP) and the City of New Bedford."

C. Section 00300 – Bid Form

1. **DELETE** Section 00300, Pages 00300-1 through 00300-24 in its entirety and **INSERT** the new attached Section 00300, Pages 00300-1 through 00300-24 on GREEN PAPER. Contractor is required to submit all City of New Bedford and MassDEP forms attached to Section 00300.

D. Section 00500 – Agreement

1. Page 00500-4, under Article 11, **DELETE** Article 11.1 in its entirety and **INSERT** the following new Article 11.1 in its place:

   "11.1 The fair share goals for the Disadvantaged Business Enterprise (DBE) participation for

this contract are a minimum of 11.00 percent Disadvantaged Minority Business Enterprise D/MBE participation and 5.00 percent Disadvantaged Women Business Enterprise D/WBE participation, applicable to the total dollar amount paid for the construction contract. The City of New Bedford goals for employment (workforce utilization) for this project are 18.00 percent minority and 6.90 percent female participation and the City of New Bedford goal for the total man-hours in each trade performed by residents of the City of New Bedford for this project is 50 percent. The CONTRACTOR shall take all affirmative steps necessary to achieve these goals, and shall provide reports documenting the portion of contract and subcontract dollars paid to DBEs, and its efforts to achieve the goals, with each invoice submitted or at such greater intervals as specified by the City of New Bedford, Massachusetts. The CONTRACTOR shall require similar reports from its subcontractors."

2. **DELETE** Page 00500-6 in its entirety and **INSERT** new attached Pages 00500-6 and 00500-7. Renumber Pages 00500-7 and 00500-8 to 00500-8 and 00500-9.

E. Section 00800 – Supplementary Conditions

1. Page 00800-4, Article 5 Bonds and Insurance, SC-5.04A., **INSERT** the following prior to the first paragraph "Add to the end of Paragraph 5.04A the following:"

2. Page 00800-7, Article 6 – Contractor's Responsibility, 6.02.C.2, second line, **DELETE** "and within MassDOT right of way"

3. Page 00800-8, Article 6 – Contractor's Responsibilities, in reference to the added language under Paragraph 6.02D, reletter paragraphs C through I to be paragraphs E through K.

4. Page 00800-12, Article 8 – Owner's Responsibility, SC 8.06, **DELETE** "Delete paragraph 8.06 of the General Conditions in its entirety" and **INSERT** "Delete paragraph 8.06A of the General Conditions and replace with "A. Not Used."

5. Page 00800-13, Article 11 – Cost of Work; Allowances; Unit Price Work, **DELETE** "SC 11.02.A. Delete article 11.02 of the General Conditions in its entirety."

6. Page 00800-13, Article 11 – Cost of Work; Allowances; Unit Price Work, SC 11.03.D.3, fourth line, **INSERT** "is less than 85-percent of or" prior to "the actual quantity".

F. Section 01010 – Summary of Work

1. **DELETE** Section 01010 in its entirety and **INSERT** new Section 01010 attached (includes Pages 01010-1 through 01010-3, Tables A, B, C and D, four plans, and Water Service Connections Table).

G. Section 01014 – Construction Sequence

1. Page 01014-1, Paragraph 1.01, **INSERT** the following new paragraph:

"D. Not all steps are shown within the Suggested Sequence of Construction (i.e., work associated with spot repairs, Jean Street construction, etc.). It is the Contractor's

responsibility to include these activities within his/her sequence of construction and schedule to be submitted to the Engineer."

2. Page 01014-2, Paragraph 3.01, Part 1, Sawyer Street Suggested Sequence of Construction, Item 1, **DELETE** "6-inch" and **REPLACE** with "8-inch".

H. Section 01025 – Measurement and Payment

1. **DELETE** Section 01025 in its entirety and **INSERT** new Section 01025 attached.

I. Section 01050 – Project Controls (Surveying)

1. **ADD** Section 01050 Project Controls (Surveying) attached.

J. Section 01046 – Control of Work

1. Page 01046-2, **DELETE** Paragraph 1.06.E and **INSERT** the following new paragraphs:

"E. The Contractor will be required to submit in writing 72-hours, Saturdays, Sundays and legal holidays excluded, in advance to the City of New Bedford Traffic Commission and Engineer a request to modify traffic flow patterns (i.e. one way streets to two way streets, street closures and detours) due to interferences during construction. Written permission shall be obtained prior to proceeding. Owner reserves the right to reject requests without modifying schedule or cost.

F. Work within this project will take place within neighborhoods streets adjacent to schools, apartment buildings, businesses, restaurants, parks, and beaches. The following additional requirements shall be adhered to at all times for maintaining traffic in these areas:

1. Adhere to the requirements of the Massachusetts Highway Department Permit for Access to State Highway and the approved traffic management plan.

2. All other requirements of Section 01170 and the Contract Documents.

G. During the work day the Contractor will have use of the limit of work area defined on the Drawings. The Contractor shall position his/her equipment such that emergency vehicles, local traffic and pedestrian access (must be ADA/AAB compliant) is available 24 hours per day to each work area when working within City streets. Contractor will be fully responsible for setting up and providing site security (i.e. temporary fencing, noise control, etc.), noise control and traffic control such that access is available as referenced above."

2. Page 01046-3, **DELETE** Paragraph 1.08 and **INSERT** the following section in its place:

"1.08 PROTECTION AND RELOCATION OF EXISTING STRUCTURES AND UTILITIES

A. Assume full responsibility for the protection of all buildings, structures and utilities, public or private, including poles, signs, services to buildings, utilities in

the street, gas pipes, water pipes, hydrants, sewers, drains and electric and telephone cables, whether or not they are shown on the Drawings. Carefully support and protect all such structures and utilities from injury of any kind. Any damage resulting from the Contractor's operations shall be repaired by him/her at his/her expense.

B. Assistance will be given the Contractor in determining the location of existing services. The Contractor, however, shall bear full responsibility for obtaining all locations of underground structures and utilities (including existing water services, drain lines and sewers). Services to buildings shall be maintained and all costs or charges resulting from damage thereto shall be paid by the Contractor.

C. Protection and temporary removal and replacement of existing utilities and structures (culverts, water courses, storm drains, gas mains, water mains, cable TV, electric, telephone, gas and water services, etc) as described in this Section shall be a part of the work under the Contract and all costs in connection therewith shall be included in the appropriate item in the Bid Form. This work shall include but is not limited to the following: bracing, hand excavation and backfill (except screened gravel), and any other work required for crossing the utility or obstruction.

D. If, in the opinion of the Engineer, permanent relocation of a utility owned by the City is required due to a direct invert conflict with the work of this Contract, he/she may direct the Contractor, in writing, to perform the work. Work so ordered will be paid for at the prices bid for applicable pipe items, where applicable, or as extra work under Article 11 of the Supplementary Conditions where no applicable item exists. If relocation of a privately owned utility is required, the City will notify the Utility to perform the work as expeditiously as possible. Fully cooperate with the City and Utility and shall have no claim for delay due to such relocation.

E. Utility relocations will be required at locations specified on the Drawings for construction of the new pipelines and appurtenances. City owned utilities (water, sewer and drain), will be relocated by the Contractor. Payment for the City owned relocations at the specified locations will be made under the appropriate items in the Bid Form. Relocations of privately owned utilities and City owned street lights, fire boxes, and electrical conduits/wires supplying power to the street lights and wires supporting the fire boxes will be performed by the Utility and the City respectively. The Contractor shall be responsible for notification of and coordinating his work with the Utilities and the City. Costs associated with coordination with the Utilities and the City shall be included in the Total Bid Price.

F. Notify all utility companies in writing at least 72 hours (excluding Saturdays, Sundays and Legal holidays) before excavating in any public way. Also notify Massachusetts Dig Safe, telephone 1 888 344 7233 at least 72 hours prior to start of work.

G. At pipe crossings and where designated by the Engineer, furnish and place screened gravel bedding so that the existing utility or pipe is firmly supported for its entire exposed length. The bedding shall extend to the mid diameter of the pipe crossed. Payment for screened gravel at pipe crossings will be made according to the unit price established in the Bid Form.

H. Coordinate the removal and replacement of traffic loops and signals, if required for performance of the work, at no additional cost to the Owner."

3. Page 01046-3, **DELETE** Paragraph 1.09 and **INSERT** the following section in its place:

"1.09 PROTECTION AND RELOCATION OF EXISTING STRUCTURES AND UTILITIES

A. In locations where public water supply is available, the Contractor may be allowed to use water without charge for puddling backfill and other construction purposes.

B. The express approval of the Owner shall be obtained before water is used. Waste of water, as determined by the Owner and Engineer, by the Contractor shall be sufficient cause for withdrawing the privilege of unrestricted use. Contractor shall use due diligence in the use of City water during the work in the interest of water conservation. Hydrants shall only be operated by the Owner's personnel.

C. The Owner requires the use of hydrant meters to record the volume of water used for construction purposes for Owner's yearly estimate of non-revenue water. The Contractor shall provide hydrant meters to measure the volume of all water used for construction purposes. The Contractor shall also provide a means of back flow prevention for connection to all hydrants that is acceptable to the Owner. During the shop drawing process, the Contractor shall submit information on the hydrant meters intended for use while metering water used for construction purposes. With the submittal, the Contractor shall provide calibration information and testing results on the hydrant meters to be used during construction. All hydrant meters shall be reviewed and approved by the Engineer and Owner prior to use. The Contractor shall document all water used for construction that passes through all hydrant meters in a form that is acceptable to both the Owner and Engineer.

D. The Owner will operate all hydrants and hydrant valves while assisting the Contractor with the installation of all hydrant meters. The Owner reserves the right to restrict use of hydrants for any reason. It shall be the responsibility of the Contractor to protect all hydrant meters from damage, loss and tampering. The Contractor shall be responsible for providing all hoses and special fittings needed for utilizing the Owner's water supply. The Contractor shall notify the New Bedford Department of Public Infrastructure, Fire Department and Police Department when public safety is affected by use of hydrants for construction purposes. The Contractor will be responsible for any damage caused by water, whether it is used or wasted. If damage does occur, Contractor shall incur all

responsibility and costs for repair of any damage and returning the site to its original condition."

4. Page 01046-4, **INSERT** the following new Paragraph 1.11.C:

   "C. At several locations, construction on other pipelines or buildings may be carried on during the same period as construction under this Contract. It will be necessary for the Contractor to plan his/her work and cooperate with the other Contractor insofar as connections required to each other's work and to prevent any interference and delay for which he/she shall receive no other compensation."

5. Page 01046-4, **INSERT** the following new Paragraph 1.12.F:

   "F. Snow plowing, removal and disposal, if required prior to or during construction, shall be performed by the Contractor in accordance with all local, State and Federal requirements."

K. Section 01170 – Special Provisions

1. Page 01170-1, **DELETE** Paragraph 1.02.D in its entirety and **INSERT** the revised paragraph in its place:

   "D. The Contractor is advised that significant stormwater and sanitary sewer flows occur in the system during periods of rainfall. The following are estimated peak flow rates for a 2-year event:

Sheet No.	Existing Pipe Size	Peak Flow 2-year storm
4	72-in	140 cfs
6	24-in	53 cfs
Into Coggeshall St. Pump Station from East (Sheet No. 6)	15-in	5 cfs
Into Coggeshall St. Pump Station from West (Sheet No. 6)	15-in	15 cfs
Pump Station Overflow	24-in	10 cfs

2. Page 01170-3, **DELETE** Paragraph 1.05.C in its entirety and **INSERT** the following new paragraphs in its place:

   "C. The Contractor should be advised that a number of businesses including restaurants, retail stores, social cubs, café's, and donut shops exist along Coggeshall Street within and directly adjacent to the work limits. Contractor shall coordinate his/her activities around the various businesses as specified and shown on the Drawings. The Contractor shall notify business at least 1 month prior to the start of construction. To assist the Contractor, the Engineer has provided the following list of businesses in Table 1 for use in coordinating activities. It is the Contractor's responsibility for ensuring full and complete coordination with businesses and the below list is not presumed to be complete nor incorporate all businesses within the project area.

Table 1 – List of Businesses

Business Name	Address	Comments
Scarlet Cord Apostolic Temple	441 Coggeshall Street	
Hayden-McFadden School	361 Cedar Grove Street	
Metro Industrial Supply	435 Coggeshall Street	
JM of New Bedford Co. Inc	423 Coggeshall Street	
Church of God Iglesia De Dios	87 Ashley Boulevard	
PAACA	360 Coggeshall Street	
Midway Service Shop	355 Coggeshall Street	
Independent Bakery	353 Coggeshall Street	
Dog House Restaurant	335 Coggeshall Street	
The Golden Greek Restaurant	1103 Acushnet Avenue	
Raposo's Hair Design & Tanning	1104 Acushnet Avenue	
World Famous Pizza	1114 Acushnet Avenue	
Inglesia Luz En Las Tinieblas ICMET Inc.	299 Coggeshall Street	
Ministerio Abriendo CaMinos	297 Coggeshall Street	
Frank's Used Furniture	293 Coggeshall Street	
Lavado's Poultry	281 Coggeshall Street	
Antonio's Restaurant	267 Coggeshall Street	
Honey Dew Donuts	260 Coggeshall Street	Contractor shall notify Honey Dew Donuts owner one month prior to construction in this area.
Papa John's Pizza	260 Coggeshall Street	
Club Recordacoes De Portugal	253 Coggeshall Street	
Dunkin' Donuts	245 Coggeshall Street	Contractor shall notify Dunkin Donuts owner one month prior to construction in this area.
End Zone Sport's Pub	218 Coggeshall Street	Employees arrive 9:00 AM, business hours 11:00 AM to 10:00 PM.
MetroPCS Authorized Dealer	209 Coggeshall Street	
Ray's Auto Sales	205 Coggeshall Street	
Sunoco	170 Coggeshall Street	Business hours 6:00 AM to 10:00 PM.
Petro Mart	171 Coggeshall Street	
Subway	157 Coggeshall Street	
McDonald's	141 Coggeshall Street	
Taco Bell	85 Coggeshall Street	
7 Eleven	45 Coggeshall Street	
Market Basket	122 Sawyer Street	
5 Star Auto Sales	20 Grandfield Street	

D. The Contractor will NOT be allowed to work between June 5 and June 8 to accommodate the Day of Portugal Feast or between July 30 and August 3 for the Feast of Blessed Sacrament.

E. Coordinate work around the existing Golden Greek parking lot and the parking lot for the Braz Community Center located at the intersection of Coggeshall Street and Acushnet Avenue/Rt 18 with the City of New Bedford. Contractor shall not have the authority to close the parking lot for his/her convenience. The parking lot shall also be accessible during the modifications and construction within Coggeshall Street. Notify adjacent business owners on Coggeshall Street, the Braz Center and the City of New Bedford a minimum of 1-month prior to the start of work. Submit a proposed construction schedule and sequence of construction to Owner and Engineer for review prior to the start of construction. Owner to provide Contractor comments for inclusion into final documents.

F. Coordinate with City of New Bedford for use of city streets, sidewalks, parking areas or other public areas."

D. Page 01170-3, Paragraph 1.06.B, first line, **DELETE** "blasting,"

E. Page 01170-5, Paragraph 1.12.B **INSERT** "or the intersection of Sawyer Street and Acushnet Avenue" immediately after "Sta. 22+00, Sheet No. 8"

F. Page 01170-5, Paragraph 1.12.B **INSERT** "or the intersection of Sawyer Street and Acushnet Avenue" immediately after "Sta. 22+00, Sheet No. 8"

G. Page 01170-6, Paragraph 1.13, **INSERT** the following new paragraph:

"B Coordinate work by Dunkin Donuts and Honey Dew Donuts to facilitate activities in front of drive-thrus during non-business hours to maintain operational. Coordinate with Traffic Management Plans. Provide a minimum of 1 month notice to both locations."

L. <u>Section 01300 - Submittals</u>

1. Page 01300-2, Paragraph 1.02, **INSERT** the following new paragraphs:

"F. Construction Photos and Audio Video Taping are included in Section 01381.

G. Construction Schedules are included in Section 01310.

H. Project Controls are included in Section 01050.

I. Warranties and Bonds are included in Section 01740."

M. <u>Section 01310 – Construction Scheduling</u>

1. **ADD** Section 01310 Construction Scheduling attached.

N. Section 01381 – Audio Video Taping and Construction Photographs

1. Global Change in Section – in the footer to the Section on the lower right corner of all pages, **DELETE** 01380 and **INSERT** 01381.

2. Page 01381-1, **CHANGE** the title of the section to "Audio Video Taping and Construction Photographs"

3. Page 01381-1, Paragraph 3.02.A, first line, **DELETE** "VHS" and **INSERT** "DVD".

4. Page 01381-2, **INSERT** the following new paragraph:

"3.03 CONSTRUCTION PHOTOGRAPHS

A. The Contractor shall use the digital camera supplied for the project and have an average of 5 color photographs per month made of the work during its progress and 15 color photographs of the completed facilities. The photographs shall be of such views and taken at such times as the Engineer directs.

B. All photographic work shall be done by a qualified, established commercial photographer acceptable to the Engineer. Three prints of each photograph shall be furnished promptly to the Engineer, and each print shall have a glossy finish and be mounted in plastic sleeving on a substantial backing. The overall dimensions of each mounted print shall be 8-in by 10-in with 1-1/4-in flexible binding margin on the long top side to permit storage in standard 3-ring binders.

C. Each photograph shall have attached to the backing a paper label, approximately 2-1/4-in wide by 1-3/4-in high containing thereon in neat lettering:

1. Contractor's name

2.Short Description of View

3.Photo Number and Date Taken

4.Photographer's Firm Name

E. At the conclusion of the project the Contractor shall burn all photographs to CD and deliver two copies to the Owner."

O. Section 01445 – Pipeline Testing and Cleaning

1. Page 01445-3, **INSERT** the following new Paragraph 3.05.F

"E. All adjoining pipes (at ends) shall be kept clean and shall be swabbed with a 5.26 percent chlorine solution just prior to installing the pipes, valves components, fittings, and appurtenances. Contractor shall provide necessary labor and equipment for disinfection."

P. Section 01500 – Temporary Facilities

1. **DELETE** Section 01500 in its entirety and **INSERT** new Section 01500 attached.

Q. Section 01570 – Traffic Regulation

1. **DELETE** Section 01570 in its entirety and **INSERT** new Section 01570 attached.

R. Section 01740 – Warranties and Bonds

1. **ADD** Section 01740 Warranties and Bonds attached.

S. Section 02120 – Pipe Preparation and Dechlorination/Dechloramination

1. **ADD** Section 02120 Pipe Preparation and Dechlorainationn/Dechlorimination attached.

T Section 02213 – Rock and Boulder Excavation

1. **DELETE** Section 02213 in its entirety and **INSERT** new Section 02213 attached.

U. Section 02221 – Trenching, Excavation, Backfilling, and Compaction

1. **DELETE** Section 02221, Pages 02221-1 through 02221-7 in its entirety and **INSERT** the new Section 02221, Pages 02221-1 through 02221-12 attached.

2. **ADD** Subsurface Conditions and Geotechnical Engineering Recommendations - Mitchell Street and Sawyer Street CIP Underground Connection Structure – New Bedford, Massachusetts to end of Section 02221 Trenching, Excavation, Backfilling and Compaction attached.

V. Section 02230 – Granular Fill Materials

1. **DELETE** Section 02230 in its entirety and **INSERT** new Section 02230 attached.

W. Section 02270 – Erosion and Sedimentation Control

1. Page 02270-1, Paragraph 2.01.A, first line **DELETE** "access ways and staging areas".

X. Section 02570 – Grandfield Access Road

1. Page 02570-1, Paragraph 1.01D, third line, **DELETE** "4" and **INSERT** "6".

Y. Section 02576 – Pavement Repair and Resurfacing

1. Page 02576-1, Paragraph 1.01.B, **INSERT** "All edges of final hot mix asphalt (HMA) that meet existing pavement at the Massachusetts DOT Right-of-Way shall be heat sealed using infra-red treatment (i.e. Route 18)." after the last sentence.

2. Page 02576-1, **DELETE** Paragraph 1.01.E and **INSERT** the following:

   "E. Between November 1 and April 1, street pavement cuts will be allowed for the installation of new water, sewer, and drain lines. If no hot mix asphalt is available from an asphalt plant, Contractor will be required to backfill the trench as specified and place Portland cement concrete in place of the bituminous pavement to the specified depth for pavement within City streets. Portland cement concrete shall remain in place until such time as bituminous pavement is available for installation, at which time Contractor shall remove the Portland cement concrete and install bituminous concrete pavement as specified. Contractor shall notify the Engineer and Owner in writing that he/she intends to work during the winter months. Submit schedule as specified. Contractor shall work during the winter months at his/her own risk and if necessary, Portland cement concrete shall be installed at no additional cost to the Owner. See Section 02550 and the Massachusetts Department of Transportation, Highway Division Permit to Access State Highway for requirements regarding work within State Highway."

3. Page 02576-2, Paragraph 1.05.A, first line, **DELETE** "1" and **INSERT** "3".

4. Page 02576-3, Paragraph 2.01, **INSERT** the following new paragraphs:

   "D Concrete used for temporary trenches during shutdown of asphalt plants shall be Type II – 4,000 psi as specified in Section 03300.

   E. Gravel sub-base, dense graded crushed stone and gravel borrow shall conform to Section 02230."

5. Page 02576-4, **INSERT** the following new paragraphs following Paragraph 3.01.H:

   "I. Whenever sub-base becomes dry enough to cause dust problems, spread calcium chloride uniformly over the gravel surface in sufficient quantity to eliminate the dust as specified in Section 01562.

   J. No mixture shall be placed on wet or damp surfaces. When placed on CLSM, CLSM shall be completely set.

   K. Paving of streets shall match the limits shown on the Drawings. Any pavement damaged outside of the limits of pavement shall be repaired at no additional cost to the Owner."

6. Page 02576-7, Paragraph 3.04.A.6, third line, **DELETE** "Massachusetts Highway Department" and **INSERT** "MassDOT – Highway Division".

Z. <u>Section 02605 – Precast Concrete Manholes, Catch Basins and Structures</u>

1. Page 02605-6, Paragraph 2.04.6, **INSERT** "7. Curb Inlets shall conform to MSSHB Section M.9.04.5".

AA. <u>Section 02616 – Ductile Iron Pipe and Fittings</u>

1. Page 02616-2, **INSERT** the following new Paragraph 1.03.H:

"H. Submit certified compliance statements from manufacturers verifying compliance with the American Iron and Steel (AIS) requirements of this project."

2. Page 02616-6, Paragraph 2.02.A, last line, **DELETE** "styrene butadiene rubber (SBR)" and **INSERT** "Nitrile (NBR) Acrylonitrile Butadiene".

3. Page 02616-7, Paragraph 2.02.D.2, first line, **DELETE** "SBR" and **INSERT** "NBR".

4. Page 02616-7, **DELETE** Paragraph 2.02.F.

5. Page 02616-9, **DELETE** Paragraph 2.06 in its entirety and **INSERT** the following new Paragraph 2.06:

"2.06 CONNECTION TO EXISTING PCCP TRANSMISSION MAIN

A. Contractor will be required to remove section(s) of the existing 48-in PCCP water main, Type SP-5, Lined Concrete Cylinder Pipe within Belleville Avenue. The pipe was installed in the 1970's. Contractor shall thoroughly review the existing conditions report provided within the specifications which indicates the pipe is in fair to poor condition. Contractor should be advised that the transmission main operates between 80 and 90 psi.

B. As part of the replacement of the 48-in main, Contractor shall install a manway as shown on the Drawings. Manway shall be an inverted tee (MJ x Flange) of the size indicated. Flange shall be bolted to tee with Type 316 stainless steel bolts with a protective wrap of "Denso" material by Denso, Inc. of Texas or equal over the flange. Flange shall have two "lifting" hooks welded to the flange to facilitate future removal if needed. Manway shall be provided with a "dog house" style manhole 6-ft in diameter with a flat top slab and 30-in frame and cover as specified in Section 02605. Submit layout and design of manway (all components) to Engineer for review as part of the shop drawing review process as specified in Section 01300.

C. Have fittings, couplings, adaptors, ductile iron pipe, and restrained joints on site and available for installation.

D. Bell by mechanical joint adapters and spigot by mechanical joint adapters shall be by Hanson Pressure Pipe Company. Fittings shall be designed and fabricated to the requirements of the appropriate AWWA standards and AWWA Manual M9, Chapter 8, as applicable; and as shown in the details of the contract documents and as follows:

1. Steel thickness of all fittings shall be designed with a maximum deflection of 2 percent of the internal diameter for the external loading condition specified in Paragraph 2.02 above. In addition, under the internal loading conditions described in Paragraph 2.02 above, the hoop stress shall not exceed 40 percent of the minimum yield stress of the steel at the design working pressure and 50 percent of the minimum yield stress

of the steel at the field test pressure. The thickness shall be a determined by AWWA M9.

2. Fabrication of the fittings shall be according to AWWA C301 and AWWA M9.

3. Interior and exterior concrete/mortar coating shall be per AWWA 301.

4. The date of manufacture or a serial number traceable to the date of manufacture and the mark or trademark of the manufacturer shall be clearly marked by stencil with waterproof paint at end of the pipe barrel. The marking may be at the bell or spigot end of the pipe, as long as it is consistent. Pipe shall not be shipped until the compressive strength of the concrete is a minimum of 4,500 psi, or 7 days after manufacture, and/or repair, whichever is the longer. Unsatisfactory or damaged pipe will be either permanently rejected or returned for minor repairs. Pits, blisters, rough spots, minor breakage, and other imperfections may be repaired, subject to the approval of the Engineer, after demonstration by the manufacturer that strong and permanent repairs result. Repairs shall be carefully inspected before final approval. Cement mortar used for repairs shall have a minimum compressive strength of 3,000 psi at the end of 7 days and 4500 psi at the end of 28 days, when tested in cylinders stored in the standard manner. Epoxy mortar may be utilized for repairs subject to the approval of the Engineer. Major breakage or spalling from interior of pipe shall be reason for the rejection of pipe. Pipe may be repaired under unloaded conditions (removal of prestressing wire). New prestressing wire may be applied when the compressive strength as determined by cylinder testing equals or exceeds the strength required for prestressing as stated in AWWA C301.

5. Cement shall be Type I or II and shall be in accordance with ASTM C150.

6. The pipe core shall be manufactured by the centrifugal method, the vertical casting method or the radial compaction method.

7. Wire shall be a minimum of No. 6 gauge and shall meet the requirements of ASTM A648, Class III. Wire with class strength greater than Class III will not be permitted.

8. Steel cylinders shall be No. 16 gauge minimum and shall be hot rolled at point of origin.

9. Mortar coatings shall consist of one part Portland cement to a maximum of 2-1/2 parts fine aggregate, by weight. Rebound, not to exceed 1/4 of the total mix weight may be used, provided the rebound is treated as fine aggregate.

10. Bell and spigot joint rings shall be steel, self-centering type and otherwise as specified in AWWA C301.

11. The rubber gaskets shall be in accordance with AWWA C301 and shall be designed and manufactured so that the completed joint will withstand an internal water pressure in excess of the design pressure of the pipe itself without showing any leakage or displacement. The pipe manufacturer shall provide facilities for testing the effectiveness of this joint against leakage and one such test may be made for each 500-ft of pipe manufactured. The manufacturer shall provide written notice to the Engineer of his/her intent to perform such tests; whereupon the Engineer will respond as to whether this testing will proceed. Such test shall be made by an internal pressure against the joint of at least the design pressure of the pipe.

E. The method of jointing the pipe shall be in strict accordance with the manufacturer's instructions. Arrange for the manufacturer to supervise the installation of at least the first three standard joints and the first restrained joint. Prestressed concrete cylinder pipe and fittings shall be installed in accordance with requirements of AWWA M9, except as otherwise specified herein.

1. The pipe interior shall be maintained dry and broom clean throughout the construction period.

2. Gasket, gasket groove and bell shall be cleaned and lubricated with a vegetable lubricant furnished by the pipe manufacturer. The lubricant shall be approved for use in potable water and shall be harmless to the gasket. Pipe shall be laid with bell ends looking ahead. If necessary, pipe may be laid with spigot ends looking ahead when approved by the Engineer. As soon as the spigot is centered in the groove of the previously laid pipe, it shall be fully engaged with approved automatic equipment. After the gasket is compressed, verify the position of the gasket with a feeler gauge provided by the pipe manufacturer.

3. Place a grout band approved by the pipe manufacturer around each exterior joint recess and fasten it in place with either wire or steel strapping stitched into its edges. Mix a 1:2 mortar grout of sufficient liquid consistency to flow easily and pour it into the joint recess beneath the grout band. To assist the flow and to assure complete filling of the entire recess completely around the pipe, agitate so all voids are filled. Close the joint recess at the top with a stiffer mix of the same mortar.

4. Pack interior joints of pipe 30-in in diameter and larger with mortar after backfilling is completed. Mortar grout shall be employed, consisting of 1 part by volume of Portland cement to

1-1/2 parts well graded coarse concrete sand meeting the requirements of ASTM C33 and sufficient water to make a stiff mortar suitable for overhead work. The mixture shall have a dry, crumbly consistency and shall be pushed into place and troweled to make a smooth joint. See page 225 in AWWA M9 for interior grouting of other sizes of pipe.

5. All pipe shall be sound and clean before laying. When laying is not in progress, including lunchtime, the open ends of the pipe shall be closed by watertight plug or other means approved by the Eengineer. Good alignment shall be preserved in laying. The deflections at joints shall not exceed 75 percent of that recommended by the manufacturers. Fittings, in addition to those shown on the drawings, shall be provided, if required, in crossing utilities which may be encountered upon opening the trench.

6. Have on hand a sufficient supply of assorted short pipe lengths, adaptors and any other fittings necessary to prevent delays in pipe laying.

7. Restrained joints shall be installed to the limits indicated on the drawings or as directed by the Engineer in accordance with applicable provisions of the above.

8. Hydrostatic leakage testing and chlorination shall be in accordance with Section 01445."

BB. <u>Section 02640 – Valves, Hydrants and Appurtenances</u>

1. Page 02640-1, **INSERT** the following new Paragraph 1.03.D.2:

   "2. Submit certified compliance statements from manufacturers verifying compliance with the American Iron and Steel (AIS) requirements of this project."

2. Page 02640-5, **INSERT** the following new paragraph 2.02.B:

   "B. Valve boxes shall be of sufficient size to fully accommodate operation of valves and for manual air release valves. Inside diameter of valve boxes shall be minimum 5-1/4 inches for butterfly valves and manual air release valves."

3. Page 02640-8 Paragraph 2.05.O.2, **DELETE** "Darling B62" and **INSERT** "Darling B62B".

4. Page 02640-8, **ADD** the following paragraphs after Paragraph 2.06:

   "2.07 MANUAL AIR RELEASE VALVES FOR BUTTERFLY VALVES

   A. Contractor shall install two manual air release valves at all new butterfly valve locations and at other locations shown on the drawings. Manual air release valves

shall be installed on each side of the butterfly valve. Manual air release valves installed at butterfly valve locations shall be 2-in. Valves shall be installed within valve boxes with covers as specified and be equipped with an operating rod.

B. Valve boxes shall be of sufficient size to fully accommodate manual relief valves. Inside diameter of valve boxes shall be minimum 5-1/4-in for manual air release valves.

C. Manual air release valves shall be manufactured by Wedge Manufacturing, LLC of Ansonia, CT or approved equal.

2.08 DUCKBILL ELASTOMETRIC CHECK VALVES

A. Submit product literature that includes information on the performance and operation of the valve, materials of construction, dimensions and weights, elastomer characteristics, headloss, flow data and pressure ratings in accordance with Section 01300.

B. The check valves to be located at DMH 10 (24-in) and DMH 2 (18-in) shall be Tide Flex Series Inline Checkmate slip in style as manufactured by Tideflex Technologies, Carnegie, PA or approved equal. The check valves shall have company name, plant location, valve size and serial number bonded to the valve.

C. Check valves are to be all rubber and the flow operated check type with slip-in cuff connection. The entire valve shall be ply reinforced throughout the body, disc and bill, which is cured and vulcanized into a one-piece unibody construction. A separate valve body or pipe used as the housing is not acceptable. The valve shall be manufactured with no metal, mechanical hinges or fasteners, which would be used to secure the disc or bill to the valve housing. The port area of the disc shall contour down, which shall allow passage of flow in one direction while preventing reverse flow. The entire valve shall fit within the pipe I.D. Once installed, the valve shall not protrude beyond the face of the structure or end of the pipe.

D. The downstream end of the valve must be circumferentially in contact with the pipe while in the closed positions.

E. Slip-in style valves will be furnished with a set of Type 316 stainless steel expansion clamps. The clamps, which will secure the valve in place, shall be installed inside the cuff portion of the valve, based on installation orientation, and shall expand outwards by means of a turnbuckle. Each clamp shall be predrilled allowing for the valve to be pinned and secured into position in accordance with the manufacturer's installation instructions.

F. The expansion clamp shall expand outwards by means of a turnbuckle to hold the valve in place. The band shall be pre-drilled to allow pins to be installed through the valve and into the pipe.

2.09 TAPPING SLEEVES AND TAPPING VALVES

A. Tapping sleeves shall be of iron or stainless steel, designated for working pressure not less than 200 psi. Armored end gaskets shall be provided for the full area of the sleeve flanges.

B. Tapping sleeves shall be of the split mechanical joint design, high-strength iron or steel body with a heavy coat of corrosion resistant coating and separate end and side gaskets. The side gasket shall extend the entire length of the tapping sleeve, forming a watertight joint. Tapping sleeves shall conform to all required AWWA standards. Tapping sleeves shall be as manufactured by:

1. Mueller H-615 or H-616.

2. JCM Industries Model No. 414.

3. Or equal.

C. Nuts and bolts shall be Type 304 stainless steel.

D. Tapping valves shall conform to the requirements specified above for gate valves except that one end shall be flanged and one mechanical. Tapping valves shall be provided with an oversized opening to permit the use of full size cutters."

5. Page 02640-9, **INSERT** the following new paragraph 3.02.D

"D. Contractor shall exercise care during flowable fill encasement of valves to prevent flowable fill from entering valve boxes and encasing the operating nut. As shown on the Drawings, install a posi-cap to prevent flowable fill from entering the valve box and seizing the operating nut of the valve. Contractor bears full responsibility for protection of the valve. If the valve is damaged or becomes inoperable during installation of flowable fill encasement, the Contractor shall replace the valve at no additional cost to the Owner."

6. Page 02640-10, **INSERT** the following new paragraphs 3.04 and 3.05 and renumber all subsequent paragraphs:

"3.04 INSTALLATION OF TAPPING SLEEVES AND VALVES

A. The proper authority shall be contacted and their permission granted prior to tapping a "live" line. The required procedures and time table shall be followed exactly.

B. Installation shall be made under pressure and flow shall be maintained. The diameters of the tap shall be not less than 1/4-inch less than the inside diameter of the branch line.

C. The entire operation shall be conducted by workers experienced in the installation of tapping sleeves and valves. The tapping machine shall be furnished by the Contractor.

D. Determine the location of the line to be tapped to confirm that the proposed location will be satisfactory and that no interference will be encountered such as joints or fittings. No tap or sleeve will be made closer than three feet from a pipe joint. The exact location of the tap is subject to the approval of the Engineer.

E. Tapping sleeve and valve with boxes shall be set squarely centered on the line to be tapped. Adequate support shall be provided under the sleeve and valve during the tapping operation. Thrust blocks or other permanent restraint acceptable to the Engineer shall be provided behind all tapping sleeves. Proper tamping of supporting pipe bedding material around and under the valve and sleeve is mandatory for buried installations. Tapping sleeves shall be installed per manufacturer's specifications.

F. Prior to completing the tap, the valve shall be swabbed with chlorine solution so that the valve seat is clean. All proper regulatory and AWWA procedures shall be followed exactly.

G. After completing the tap, the valve shall be flushed to ensure that the valve seat is clean. All proper regulatory procedures (including disinfection) shall be followed exactly.

3.05 INSTALLATION OF ELASTOMERIC CHECK VALVES

A. Valves shall be installed in accordance with manufacturer's recommendations and written installation and operation manual and approved submittals.

B. Clamp shall be mounted on the downstream side of the valve to allow future access. Valve shall be located on the upstream side of the manhole.

B. Manufacturer's authorized representative shall be available for customer service during installation and start-up, and to train personnel in the operation, maintenance, and trouble shooting of the valve.

C. Prior to installation of the valve, thoroughly clean, remove and dispose of debris of all sediment/debris in existing drain lines/CSO lines. Dispose of debris in accordance with applicable federal, state, and local requirements. Disposal of debris within The Acushnet River is strictly prohibited.

D. Contractor will need to coordinate work activities around tide schedule and wet weather events.

E. Provide Owner with GIS coordinate locations of the valves and pertinent GIS file data as specified in Section 01720."

CC. Section 02666 – Temporary Services

1. **DELETE** Section 02666 in its entirety and **INSERT** new Section 02666 attached.

DD. Section 02764 – Television Inspection

1. **DELETE** Section 02764 in its entirety and **INSERT** new Section 02764 attached.

EE. Section 02901 – Miscellaneous Work and Cleanup

1. Page 02901-1, Paragraph 1.01.C.4, **INSERT** "and videotape" after "Job photographs"

2. Page 02901-1, Paragraph 1.01.C, **INSERT** the following new Paragraphs:

   "8. Cooperation with other Contractors and connection to work by others.

   9. Protection and bracing of utility poles.

   10. Temporary facilities

   11. Protection and/or removal and replacement of traffic signal conduit, wiring and loop detectors, and City fire box wiring.

   12. Maintaining, protecting, and re-establishing existing survey control."

3. Page 02901-1, **INSERT** the following new Paragraph 1.01.D:

   "D. Submit to Engineer, in accordance with Article 2.05B of the General Conditions, a breakdown of the lump sum for miscellaneous work and cleanup including the above items as a minimum."

4. Page 02901-2, **INSERT** the following new Paragraph 1.04.C

   "C. Any granite curbing removed and not reinstalled as part of the project shall remain property of the Owner. Deliver to 1105 Shawmut Avenue, New Bedford, MA."

5. Page 02901-2, **INSERT** the following new Paragraph 1.06.B

   "B. Snow management, removal and disposal as specified in Section 01046."

6. Page 02901-2, Paragraph 1.07B, third line, **DELETE** "Section (32 92 19) (02930)" and **INSERT** "Section 02930".

7. Page 02901-2, Paragraph 1.08, **INSERT** "AND VIDEOTAPE OF PROJECT" after "PROJECT PHOTOGRAPHS"

8. Page 02901-2, Paragraph 1.08, **INSERT** the following new Paragraph 1.08.A and renumber subsequent Paragraphs.

   "A. Prior to the excavation in any street or cross country area, document existing conditions using videotape as detailed in Section 01381. The videotape and photographs shall be retained in a secure location throughout the duration of the project and shall then be turned over to the Owner."

9. Page 02901-3, **DELETE** Paragraph 1.09 in its entirety and **INSERT** the following new

paragraph:

"1.09 CCTV EQUIPMENT AND SOFTWARE

A. Provide Owner with a CCTV truck, CCTV camera, manhole inspection camera, field and office software packages, licenses, warrantees, and all appurtenances as specified in Section 02764. Include allowance of $2,000 for supplemental communication equipment as specified. All equipment shall be delivered to the Department of Public Infrastructure, 1105 Shawmut Avenue, New Bedford MA. All equipment shall be new. Used equipment will not be accepted."

10. Page 02901-3, **INSERT** the following new paragraphs after Paragraph 1.09:

"1.10 COOPERATION WITH OTHER CONTRACTORS AND CONNECTION TO WORK BY OTHERS

A. At several locations, construction on other contracts may be carried on during the same period as construction under this Contract. It will be necessary for the Contractor to plan his/her work and cooperate with the other Contractor insofar as connections required to each other's work and to prevent any interference and delay for which he/she shall receive no other compensation than that agreed upon for this Item.

1.11 PROTECTION AND BRACING OF UTILITY POLES

A. Make all arrangements with the proper utility companies for bracing and protection of all utility poles that may be damaged or endangered by the operations. Work under this item shall include the related removal and reinstallation of guy wires, or support poles whether shown on the Drawing or not.

1.12 TEMPORARY FACILITIES

A. Furnish, install, maintain and remove all temporary facilities required for construction or called for in Section 01500.

1.13 PROTECTION AND/OR REMOVAL AND REPLACEMENT OF TRAFFIC SIGNAL CONDUIT, WIRING AND LOOP DETECTORS AND CITY FIRE BOX WIRING

A. Existing traffic signal conduit, wiring and loop detectors and fire box wiring conduit and wiring that are damaged or removed during construction shall be reconstructed, restored in "like new" working condition, and approved by Owner and Engineer in the same location from which they were removed.

B. Temporary loop detectors shall be placed in temporary patching and as directed by the Engineer. Permanent loop detectors shall be placed in permanent trench patch areas, final binder course or as directed by the Engineer.

C. The Contractor shall test all replaced loop detectors following installation in

accordance with the MHSSHB and IMSA testing procedures in the presence of the Engineer and submit a copy of the testing results to the City of New Bedford. Where traffic signal systems are under Massachusetts Department of Transportation, Highway Division jurisdiction, the loop testing shall occur in the presence of a representative from District 5 Traffic Engineering.

1.14 SURVEY CONTROL

A. The Contractor is required to maintain survey control throughout the duration of the project, and to protect and reset existing monuments and bench marks. This work shall include, but is not limited to, maintenance and protection of existing control and offset and reset of existing monuments and bench marks by a Registered Professional Land Surveyor in the Commonwealth of Massachusetts. Control may include, but is not limited to: iron pipes, stone or concrete bounds, survey/property disks, drill holes in walls, sidewalks and solid surfaces. Drill holes shall not be set in bituminous concrete.

B. Contractor shall take great care to maintain and protect existing State Highway and City layout bounds. If an existing layout bound is disturbed, or needs to be reset, they shall be done so in conformance with the MHSSHB by a Registered Professional Land Surveyor in the Commonwealth of Massachusetts."

FF. Section 02930 – Loaming and Seeding

1. Page 02930-2, Paragraph 3.01A, second line, **DELETE** "4"" and **INSERT** "6"".

GG. Section 11280 – Flap Gates

1. **DELETE** Section 11280 in its entirety.

HH. APPENDIX

1. Appendix A, **ADD** Test Boring Logs B-DS-14, B-CS-30 and B-CS-31 attached.

DRAWINGS

A. Cover Sheet

1. **ADD** information shown on attached "Sheet No. Cover, Figure No. SK-G-1" showing Jean Street work location.

B. Sheet No. G-1 – Index Sheet

1. **ADD** information shown on attached "Sheet No. G-1, Figure No. SK-G-2" adding Sheet No. 9A Jean Street.

C. Sheet No. LGN – Legend, General Notes and General Plan

1. **ADD** information shown on attached "Sheet No. LGN, Figure No. SK-G-3" showing Jean Street work location.

2. General Notes, Note 16, **INSERT** "unless otherwise noted" after "shall be polyvinyl chloride".

D. Sheet No. 4 – Mitchell Street

1. **ADD** information shown on attached "Sheet No. 4, Figure No. SK-C-1" showing paving limits.

E. Sheet No. 6 – Coggeshall Street

1. **DELETE** Sheet No. 6 in its entirety and **INSERT** new Sheet No. 6 attached.

F. Sheet No. 7– Coggeshall Street

1. **ADD** information shown on attached "Sheet No. 7, Figure No. SK-C-2" showing deletion of lead service note.

2. **ADD** information shown on attached "Sheet No. 7, Figure No. SK-C-3" showing updated utility crossings and structure.

3. STA 15+23, 22-ft LEFT, add the following note: "Remove existing catch basin and replace with new catch basin. See Detail Sheet No. C-4."

G. Sheet No. 8 – Coggeshall Street

1. **ADD** information shown on attached "Sheet No. 8, Figure No. SK-C-4" showing plugging and abandoning existing drain.

2. **ADD** information shown on attached "Sheet No. 8, Figure No. SK-C-5" adding State Highway information, deleting sewer service connection replacement, and adding water service connection note.

3. **ADD** information shown on attached "Sheet No. 8, Figure No. SK-C-6" showing sewer service reconnection.

4. Plan, lower right hand corner, lead service note, fourth line, **DELETE** "(TYP. OF 2)"

H. Sheet No. 9 – Belleville Avenue

1. **DELETE** Sheet No. 9 in its entirety and **INSERT** new Sheet No. 9 attached.

I. Sheet No. 9A – Jean Street

1. **ADD** Sheet No. 9A Jean Street attached.

J. Sheet No. 10 – Miscellaneous Profiles I

1. **DELETE** Sheet No. 10 in its entirety and **INSERT** new Sheet No. 10 attached.

K. Sheet No. 11 – Miscellaneous Profiles II

1. **ADD** information shown on attached "Sheet No. 11, Figure No. SK-C-7" showing revised manhole at STA 0+00.

2. Profile "D", **DELETE** grid elevations "30, 20, 10, 0" and **INSERT** "40, 30, 20, 10" both sides of profile.

L. Sheet No. 12 – Miscellaneous Profiles III

1. **ADD** information shown on attached "Sheet No. 12, Figure No. SK-C-8" showing revised utility crossing.

2. **ADD** the following general note:

   "NOTES
   1. Proposed future ground surface (by others) not shown on profiles this sheet."

M. Sheet No. C-1 – Miscellaneous Details I

1. **DELETE** "Sewer Service Connection Detail" and **INSERT** information shown on attached "Sheet No. C-1, Figure No. SK-C-9" showing revised sewer service connection detail with CLSM requirement in its place.

N. Sheet No. C-2 – Miscellaneous Details II

1. Manhole Type "A" Detail, Section B-B, full concrete encasement note, **ADD** "Encasement design by Registered Professional Engineer in the Commonwealth of Massachusetts shall be submitted."

2. Chimney Detail, Elevation, **DELETE**"8" PVC Sewer" and **INSERT** "Sewer Pipe (size varies) and **DELETE** "8" x 6" Tee" and **INSERT** "Tee (size varies x 6")".

O. Sheet No. C-4 – Miscellaneous Details IV

1. New Water Service Connection Detail, Section B-B, full concrete encasement note, **DELETE** "Items 3m-1 and 27" and **INSERT** "Item 3m".

2. Reconstruction Methods of Existing House Connections, Method A and Method B, **DELETE** "Maximum Payment Length under Item 5b".

P. Sheet No. C-6 – Miscellaneous Details VI

1. **ADD** information shown on attached "Sheet No. C-6, Figure No. SK-C-10" showing revised concrete slab elevations and adding roof plan.

2. Existing Intercepting Sewer Bulkhead Details, **DELETE** ”48” and 42”” and **INSERT** ”54””.

Q. Sheet No. C-7 – Miscellaneous Details VII

1. **DELETE** Sheet No. C-7 in its entirety and **INSERT** new Sheet No. C-7 attached.

R. Sheet No. C-8 – Miscellaneous Details VIII

1. **DELETE** “Connection Detail for DI Pipe” in its entirety.

2. **ADD** information shown on attached “Sheet No. C-8, Figure No. SK-C-11A” showing revised 30-in DI Water Main profile.

3. **ADD** information shown on attached “Sheet No. C-8, Figure No. SK-C-11B” showing revised 30-in DI Water Main profile.

S. Sheet No. C-9 – Miscellaneous Details IX

1. **DELETE** Sheet No. C-9 in its entirety and **INSERT** new Sheet No. C-9 attached.

QUESTIONS

Text shown in “*italics*” indicates question asked. Text shown immediately following indicates response to question asked.

A. *Due to the past and pending inclement weather, we request a 2 week postponement of the bid to the City of New Bedford.*

This project is MASS DEP funded under the Clean Water State Revolving Fund (CWSRF) Loan program. Construction contract award must be made by April 1, 2015, allowing no room for schedule slippage. The City of New Bedford will not be postponing the bids. Submit bids in accordance with the advertised date and time.

B. *Installing a 36” (3’) Service Lateral Connection Liner (SLCL) will preclude you from full length lateral lining from the main in the future. We have witnessed rehabilitation project in the past where the water table has risen following a SLCL installation and infiltration has entered further up the lateral at a higher elevation. Would the engineer/owner consider longer lateral installation as part of this contract? Lateral lining technology has recently advanced allowing longer lateral installation from the main for distances up to 70’ long (without the need for a cleanout to facilitate the lateral liner installation). The longer the lateral liner, the more cost efficient the work becomes and greater infiltration elimination is achieved. In short you may eliminate more infiltration for the money you spent to do the work “a bigger bang for the buck”. In addition, you are also installing an asset and extending the life expectancy of the entire lateral by 50 years. Would you consider changing the base SLC contract bid item to lateral liners up to 20’ long or adding a unit item to extend the lateral liner beyond 36” in length?*

There will be no change from the 3-ft service lateral connection liner length.

C. *Table C of Section 01010 provides a list of each service connection to be lined. Within the list the engineer calls out if there is a bend at the service connection, Can the engineer give better clarification to what type of bend we should be expecting whether it be a 45 or a 90 degree angle?*

The CCTV records (video recordings and sewer logs) are available from the Engineer upon request.

D. *Table C of Section 01010 provides a list of each service connection to be lined. Within the list the engineer calls out in the observation that the connection is either a factory or a break in. Are the break in connections perpendicular to the main line or should we expect any tangential angles?*

The CCTV records (video recordings and sewer logs) are available from the Engineer upon request.

E. *Table C of Section 01010 provides a list of each service connection to be lined. Does the Engineer have any pre inspection CCTV videos that could be made available for review?*

The CCTV records (video recordings and sewer logs) are available from the Engineer upon request.

F. *Upon reviewing the Plans and Specifications for the above referenced project, Advanced Drainage Systems, Inc. (ADS) would like to respectfully request that our DW (Dual Wall) and TW (Triple Wall) SaniTite HP pipe be considered as an equal alternative material to PVC for sanitary sewer applications and RCP/PVC for storm sewer applications. In support of this request, I have attached a complete technical submittal package (best viewed on a computer, not printed). Please evaluate for acceptance as an equal alternate to the specified materials.*

In accordance the City of New Bedford, Department of Public Infrastructure Construction Standards, ADS dual wall or triple wall SaniTite HP pipe is not an acceptable equal to reinforced concrete or PVC drain pipe, or PVC sanitary sewer pipe.

PRE-BID CONFERENCE

Text shown in "*italics*" indicates question asked. Text shown immediately following indicates response to question asked.

A. *Does the existing system have mainly dry weather flows or do the storm drains and sewers that are being replaced have both sanitary and wet weather flows?*

The storm drains and sewer lines within the project carry both sanitary and dry weather flows. See Section 01170 for a listing of peak wet weather flows during a 2-year storm event.

B. *What are the procedures for disposal of polystyrene and grit from sewer and storm drain cleaning work?*

The Contractor may dispose of polystyrene from CIPP lining work and grit from cleaning of sewer and storm drains at the City of New Bedford, Department of Public Infrastructure, 1105 Shawmut Avenue, New Bedford, MA. Contractor shall coordinate with Owner and Engineer prior to delivery of material to this location.

C. *Would a field trailer be sufficient rather than an office?*

Section 01500 allows for the Contractor to provide either an office or field trailer.

D. *Can alternate pipe materials be accepted prior to bidding?*

The Contractor shall bid the project based on the materials and quantities identified in the Section 00300 - Bid Form and shown on the Drawings.

E. *Can Sanitite HP be considered an equal alternative material to PVC for gravity sanitary sewer applications?*

See response under Questions – F above.

F. *Can ADS drain pipe be considered an equal alternative material to RCP and PVC for gravity storm sewer applications?*

See response under Questions – F above.

CITY OF NEW BEDFORD, MASSACHUSETTS
PHASE 1 - COGGESHALL STREET SEWER SEPARATION
PROJECT NO. CWSRF 3858
BID NO. 15439042
PRE-BID CONFERENCE MEETING
THURSDAY, FEBRUARY 19, 2015 AT 10:00 AM

ATTENDANCE LIST

NAME	AGENCY / COMPANY	PHONE	FAX	EMAIL
Shawn Syde	CDM Smith	401-457-0324		sydestc@cdmsmith.com
James Ricci	City of New Bedford	508-979-1603		James.Ricci@newbedford-ma.gov
LAUREN VIEIRA	CDM Smith	401-4570325		VIERALC@cdmsmith.com
ROLA HASSOUN	CDM SMITH	401-457 0381		hassounrh@cdmsmith.com
Matt Gallant	CDM Smith	401-457-0316	401-457-0316	gallantmp@cdmsmith.com
Mickey Lawlor	The Dow Co	9786821414	9786545191	bDow@theDowCompany.com
Mike Hvizdos	Thompson Pump	(401) 524-2798		Mhvizdos@ThompsonPump.Com
Kyle AINSLEY	CALIACCO CORP	781-340-0400	781-340-0860	MCIAMPA@CALIACCO.COM
RICHIE SHERIDAN	CUES INC	617 519 7125	617 3347044	RSHERIDAN@CUESINC.COM
MICHAEL BISETKO	Bisetko Contracting Corp	508-679-0518	508-679-9144	mikeB@Bisetkocorp.com
Eric Cohen	City of New Bedford	508 979 1460		Eric.Cohen@newbedford-ma.gov
Debra Travers	City of New Bedford	508-979-1432	508-991-6148	Debra.Travers@newbedford-ma.gov
David Zappa	R. Zappa Corp.	781 344 8822	781 344 7382	dzappa@zappa.com
AARON CHEEVER	ADVANCED DRAINAGE SYSTEMS, INC.	978 302 0650		AARON.CHEEVER@ADS-PIPE.COM
JOSEPH BOTTOMLEY	P GIOVINE SONS INC	617-364-5560	617-364-9460	JOSEPH@PGIOVINE.com

CITY OF NEW BEDFORD, MASSACHUSETTS
PHASE 1 - COGGESHALL STREET SEWER SEPARATION
PROJECT NO. CWSRF 3858
BID NO. 15439042
PRE-BID CONFERENCE MEETING
THURSDAY, FEBRUARY 19, 2015 AT 10:00 AM

ATTENDANCE LIST

NAME	AGENCY / COMPANY	PHONE	FAX	EMAIL
Michael Rocchio	John Rocchio Corp	401-949-5565	401-949-5310	MROCCHIO@JohnRocchioCorp.com
Bob Pion	John Rocchio Corp	401-949-5565	401-949-5310	BOBPION@JohnRocchioCorp.com
DAVID ANKENER	MA DEP	617 292 5840	617 292 5850	David.Ankener@state.ma.us

TABLE OF CONTENTS

Section		No. of Pages
DIVISION 00 BIDDING AND CONTRACT REQUIREMENTS		
00020	Invitation to Bid	3
00100	Instructions to Bidders	14
00300	Bid Form	24
00500	Agreement	9
00610	Performance Bond	3
00615	Payment Bond	3
00700	General Conditions	49
00800	Supplementary Conditions	19
DIVISION 01 GENERAL REQUIREMENTS		
01010	Summary of Work	7
01014	Construction Sequence	4
01025	Measurement and Payment	30
01046	Control of Work	4
01050	Project Controls (Surveying)	3
01110	Environmental Protection Procedures	5
01170	Special Provisions	6
01740	Warranties and Bonds	2
01180	Pipe Penetrations	2
01300	Submittals	14
01310	Construction Scheduling	9
01381	Audio Video Taping and Construction Photographs	2
01390	Hazardous Materials Health and Safety Plan Requirements	7
01445	Pipeline Testing and Cleaning	3
01500	Temporary Facilities	7
01510	Maintenance of Flow in Existing Sewers	2
01562	Dust Control	1
01570	Traffic Regulation	4
01576	Policing	1
01601	Control of Materials	2
01700	Contract Closeout	1
01720	Project Record Documents	4
01730	Operation and Maintenance Data	7
01740	Warranties and Bonds	2
DIVISION 02 SITEWORK		
02100	Site Preparation	2
02120	Pipe Preparation and Dechlorination/Dechloramination	4
02140	Dewatering and Drainage	5
02213	Rock and Boulder Excavation	3
02221	Trenching, Excavation, Backfilling and Compaction	12
02230	Granular Materials	5
02270	Erosion and Sedimentation Control	4

TABLE OF CONTENTS
(Continued)

Section		No. of Pages
02280	Contaminated Material Excavation	13
02282	Transportation and Disposal of Contaminated Material	7
02325	Support of Excavation	7
02550	Work in State Highways	2
02570	Grandfield Access Road	3
02571	Temporary Road	3
02576	Pavement Repair and Resurfacing	9
02605	Precast Concrete Manholes, Catch Basins and Structures	10
02612	Reinforced Concrete Sewer Pipe	7
02616	Ductile Iron Pipe and Fittings	12
02622	Polyvinyl Chloride (PVC) Gravity Pipe	7
02627	Fiberglass Pipe	8
02628	Pipe Repair Couplings	2
02640	Valves, Hydrants and Appurtenances	11
02657	Decking	1
02658	Cutting and Removal of Main Interceptor	5
02663	Water Service Connections	3
02666	Temporary Services	4
02668	Connections to and Work on Existing Drain and Sewer System and Work by Others	2
02762	Sewer Line Joint Testing	1
02764	Television Inspection	8
02765	Sewer Line and Manhole Cleaning	6
02767	Monolithic Manhole Surfacing Systems	6
02769	Cured-in-Place Pipe Liner	7
02770	Service Lateral Connection Liner	10
02901	Miscellaneous Work and Cleanup	3
02930	Loaming and Seeding	4

DIVISION 03 CONCRETE

03100	Concrete Formwork	5
03200	Concrete Reinforcement	5
03250	Concrete Joints and Joint Accessories	5
03300	Cast-In-Place Concrete	20
03350	Concrete Finishes	3
03600	Grout	5

DIVISION 05 METALS

05500	Miscellaneous Metal	8

DIVISION 07 THERMAL AND MOISTURE PROTECTION

07115	Bituminous Dampproofing	3

TABLE OF CONTENTS
(Continued)

Section	No. of Pages
APPENDICES	
A. Boring Logs	
B. NDT Nondestructive Testing 48" PCCP Report	
C. State Highway Permit (To be inserted)	
D. Analytical Test Results and Required MCP Submittals	
E. Bid Form (2 copies)	

© 2015 CDM Smith
All Rights Reserved

BID FORM
TO
CITY OF NEW BEDFORD, MASSACHUSETTS
WASTEWATER SYSTEM IMPROVEMENTS
PHASE I – COGGESHALL STREET SEWER SEPARATION
BID NO. 15439042
PROJECT NO. CWSRF 3858

The undersigned declares that the only persons or parties interested in this Bid as principals are as stated; that the Bid is made without any collusion with other persons, firms, or corporations; that all the Contract Documents as prepared by CDM Smith, 260 West Exchange Street, Suite 300, Providence, RI 02903 and dated February 2015 have been carefully examined; that the undersigned is fully informed in regard to all conditions pertaining to the Work and the place where it is to be done, and from them the undersigned makes this Bid. These prices shall cover all expenses incurred in performing the Work required under the Contract Documents, of which this Bid Form is a part.

The time period for holding bids, where Federal approval is not required is 30 days, Saturdays, Sundays and legal holidays excluded, after the opening of the Bids and where Federal approved is required, the time period for holding bids is 30 days, Saturdays, Sundays and holidays excluded after Federal approval.

The Bid Security accompanying this Bid shall be in the amount of five percent of the Bid.

If a Notice of Award accompanied by at least six unsigned copies of the Agreement and all other applicable Contract Documents is delivered to the undersigned within thirty days, excluding Saturdays, Sundays, and legal holidays, after the actual date of the opening of the Bids, the undersigned will within five days, excluding Saturdays, Sundays, and legal holidays, after the date of receipt of such notification, execute and return all copies of the Agreement and all other applicable Contract Documents to Owner. The premiums for all Bonds required shall be paid by Contractor and shall be included in the Contract Price. The undersigned Bidder further agrees that the Bid Security accompanying this Bid shall become the property of Owner if the Bidder fails to execute the Agreement as stated above.

The Bid Security shall be sealed in a separate envelope from the Bid and then attached to the envelope containing the Bid.

The undersigned hereby agrees that the Contract Time shall commence twenty days following the Effective Date of the Agreement and to fully complete the Work within 365 Calendar Days and in accordance with the terms as stated in the Agreement. The undersigned further agrees to pay OWNER, as liquidated damages, $2,500.00 per day for each calendar day beyond the Contract Time Limit or extension thereof that the Work remains incomplete, in accordance with the terms of the Agreement.

The undersigned acknowledges receipt of addenda numbered:

_____

In accordance with the above understanding, the undersigned proposes to perform the Work, furnish all materials and complete the Work in its entirety in the manner and under the conditions required at the prices listed as follows:

CITY OF NEW BEDFORD, MASSACHUSETTS
WASTEWATER SYSTEM IMPROVEMENTS
PHASE I - COGGESHALL STREET SEWER SEPARATION
BID NO. 15439042
PROJECT NO. CWSRF 3858

BID FORM

Item No.	Estimated Quantity	Brief Description of Items With Unit Bid Price in Words	Unit Bid Price In Figures	Amount in Figures
1a	285 lin. ft.	Furnish and install Class IV 48-in. RC drain pipe, including earth excavation and backfill, all depths		
		_____ per linear foot	$ _____	$ _____
1b	405 lin. ft.	Furnish and install Class V 48-in. RC drain pipe, including earth excavation and backfill, all depths		
		_____ per linear foot	$ _____	$ _____
1c	275 lin. ft.	Furnish and install 30-in. RC drain pipe, including earth excavation and backfill, all depths		
		_____ per linear foot	$ _____	$ _____
1d	370 lin. ft.	Furnish and install 24-in. RC drain pipe, including earth excavation and backfill, all depths		
		_____ per linear foot	$ _____	$ _____

SUBTOTAL PAGE 00300-2 _____

CITY OF NEW BEDFORD, MASSACHUSETTS
WASTEWATER SYSTEM IMPROVEMENTS
PHASE I - COGGESHALL STREET SEWER SEPARATION
BID NO. 15439042
PROJECT NO. CWSRF 3858

BID FORM

Item No.	Estimated Quantity	Brief Description of Items With Unit Bid Price in Words	Unit Bid Price In Figures	Amount in Figures
1e	1,480 lin. ft.	Furnish and install 18-in. RC drain pipe, including earth excavation and backfill, all depths		
		_____ per linear foot	$ _____	$ _____
1f	135 lin. ft.	Furnish and install 12-in. PVC drain pipe, including earth excavation and backfill, all depths		
		_____ per linear foot	$ _____	$ _____
1g	565 lin. ft.	Furnish and install 12-in. Class 52 DI drain pipe, including earth excavation and backfill, all depths		
		_____ per linear foot	$ _____	$ _____
1h	35 lin. ft.	Furnish and install 10-in. PVC drain pipe, including earth excavation and backfill, all depths		
		_____ per linear foot	$ _____	$ _____
1i	95 lin. ft.	Furnish and install 8-in. PVC drain pipe, including earth excavation and backfill, all depths		
		_____ per linear foot	$ _____	$ _____

SUBTOTAL PAGE 00300-3 _____

CITY OF NEW BEDFORD, MASSACHUSETTS
WASTEWATER SYSTEM IMPROVEMENTS
PHASE I - COGGESHALL STREET SEWER SEPARATION
BID NO. 15439042
PROJECT NO. CWSRF 3858

BID FORM

Item No.	Estimated Quantity	Brief Description of Items With Unit Bid Price in Words	Unit Bid Price In Figures	Amount in Figures
1j	7 ea.	Furnish and install wye saddles for lateral drain connections		
		_____ each	$ _____	$ _____
1k	2,600 sq. yds.	Removal and disposal of existing reinforced concrete sub-base		
		_____ per square yard	$ _____	$ _____
1l	200 sq. yds.	Removal and delivery of existing cobblestones		
		_____ per square yard	$ _____	$ _____
2a	120 lin. ft.	Furnish and install 24-in. FRP sewer pipe, including earth excavation and backfill, all depths		
		_____ per linear foot	$ _____	$ _____
2b	450 lin. ft.	Furnish and install 20-in. DI sewer pipe, including earth excavation and backfill, all depths		
		_____ per linear foot	$ _____	$ _____

SUBTOTAL PAGE 00300-4 _____

CITY OF NEW BEDFORD, MASSACHUSETTS
WASTEWATER SYSTEM IMPROVEMENTS
PHASE I - COGGESHALL STREET SEWER SEPARATION
BID NO. 15439042
PROJECT NO. CWSRF 3858

BID FORM

Item No.	Estimated Quantity	Brief Description of Items With Unit Bid Price in Words	Unit Bid Price In Figures	Amount in Figures
2c	40 lin. ft.	Furnish and install 18-in. DI sewer pipe, including earth excavation and backfill, all depths		
		_____ per linear foot	$ _____	$ _____
2d-1	440 lin. ft.	Furnish and install 18-in. SDR 35 PVC sewer pipe, including earth excavation and backfill, all depths		
		_____ per linear foot	$ _____	$ _____
2d-2	255 lin. ft.	Furnish and install 15-in. SDR 35 PVC sewer pipe, including earth excavation and backfill, all depths		
		_____ per linear foot	$ _____	$ _____
2e	65 lin. ft.	Furnish and install 12-in. SDR 35 PVC sewer pipe, including earth excavation and backfill, all depths		
		_____ per linear foot	$ _____	$ _____
2f	335 lin. ft.	Furnish and install 10-in. SDR 35 PVC sewer pipe, including earth excavation and backfill, all depths		
		_____ per linear foot	$ _____	$ _____

SUBTOTAL PAGE 00300-5 _____

CITY OF NEW BEDFORD, MASSACHUSETTS
WASTEWATER SYSTEM IMPROVEMENTS
PHASE I - COGGESHALL STREET SEWER SEPARATION
BID NO. 15439042
PROJECT NO. CWSRF 3858

BID FORM

Item No.	Estimated Quantity	Brief Description of Items With Unit Bid Price in Words	Unit Bid Price In Figures	Amount in Figures
2g	305 lin. ft.	Furnish and install 8-in. SDR 35 PVC sewer pipe, including earth excavation and backfill, all depths		
		_____ per linear foot	$ _____	$ _____
2h	55 ea.	Furnish and install wye-branches or tees for sewer service connections, all sizes		
		_____ each	$ _____	$ _____
2i	1,320 lin. ft.	Furnish and install 6-in. SDR 35 PVC or DI sewer service connection pipe to property line		
		_____ per linear foot	$ _____	$ _____
2j	65 vert. ft.	Furnish and install 6-in. chimneys including fittings		
		_____ per vertical foot	$ _____	$ _____
2k	5 vert. ft.	Furnish and install 8-in. PVC drop manhole connections including fittings		
		_____ per vertical foot	$ _____	$ _____

SUBTOTAL PAGE 00300-6 _____

CITY OF NEW BEDFORD, MASSACHUSETTS
WASTEWATER SYSTEM IMPROVEMENTS
PHASE I - COGGESHALL STREET SEWER SEPARATION
BID NO. 15439042
PROJECT NO. CWSRF 3858

BID FORM

Item No.	Estimated Quantity	Brief Description of Items With Unit Bid Price in Words	Unit Bid Price In Figures	Amount in Figures
2l	7 vert. ft.	Furnish and install 10-in. PVC drop manhole connections including fittings		
		_____ per vertical foot	$ _____	$ _____
2m	1 ea.	Furnish and install SDR 35 PVC pipe bends		
		_____ each	$ _____	$ _____
3a	230 lin. ft.	Furnish and install 30-in., Class 52, DI water main, including earth excavation and backfill		
		_____ per linear foot	$ _____	$ _____
3b	225 lin. ft.	Furnish and install 16-in., Class 52, DI water main, including earth excavation and backfill		
		_____ per linear foot	$ _____	$ _____
3c	1,380 lin. ft.	Furnish and install 12-in., Class 52, DI water main, including earth excavation and backfill		
		_____ per linear foot	$ _____	$ _____

SUBTOTAL PAGE 00300-7 _____

CITY OF NEW BEDFORD, MASSACHUSETTS
WASTEWATER SYSTEM IMPROVEMENTS
PHASE I - COGGESHALL STREET SEWER SEPARATION
BID NO. 15439042
PROJECT NO. CWSRF 3858

BID FORM

Item No.	Estimated Quantity	Brief Description of Items With Unit Bid Price in Words	Unit Bid Price In Figures	Amount in Figures
3d	15 lin. ft.	Furnish and install 10-in., Class 52, DI water main, including earth excavation and backfill		
		_____ per linear foot	$ _____	$ _____
3e	700 lin. ft.	Furnish and install 8-in., Class 52, DI water main, including earth excavation and backfill		
		_____ per linear foot	$ _____	$ _____
3f	85 lin. ft.	Furnish and install 6-in., Class 52, DI water main, including earth excavation and backfill		
		_____ per linear foot	$ _____	$ _____
3g	5 ea.	Furnish and install new fire hydrant assemblies		
		_____ each	$ _____	$ _____
3h	3 ea.	Furnish and install 30-in. butterfly valve and box		
		_____ each	$ _____	$ _____

SUBTOTAL PAGE 00300-8 _____

CITY OF NEW BEDFORD, MASSACHUSETTS
WASTEWATER SYSTEM IMPROVEMENTS
PHASE I - COGGESHALL STREET SEWER SEPARATION
BID NO. 15439042
PROJECT NO. CWSRF 3858

BID FORM

Item No.	Estimated Quantity	Brief Description of Items With Unit Bid Price in Words	Unit Bid Price In Figures	Amount in Figures
3i	12 ea.	Furnish and install 12-in. gate valves and boxes		
		_____ each	$ _____	$ _____
3j	3 ea.	Furnish and install 8-in. gate valves and boxes		
		_____ each	$ _____	$ _____
3k	1 ea.	Furnish and install 6-in. gate valves and boxes		
		_____ each	$ _____	$ _____
3l	7,500 lbs.	Ductile Iron Fittings		
		_____ per pound	$ _____	$ _____
3m	1,100 lin. ft.	Furnish and install water service connections		
		_____ per linear foot	$ _____	$ _____

SUBTOTAL PAGE 00300-9 _____

CITY OF NEW BEDFORD, MASSACHUSETTS
WASTEWATER SYSTEM IMPROVEMENTS
PHASE I - COGGESHALL STREET SEWER SEPARATION
BID NO. 15439042
PROJECT NO. CWSRF 3858

BID FORM

Item No.	Estimated Quantity	Brief Description of Items With Unit Bid Price in Words	Unit Bid Price In Figures	Amount in Figures
3n	1 ea.	Furnish and install 8"x8" TS&V		
		_____ each	$ _____	$ _____
4a	20 vert. ft.	Furnish and install drain manhole riser, Type "A"		
		_____ per vertical foot	$ _____	$ _____
4b	7 vert. ft.	Furnish and install drain manhole, Type "C"		
		_____ per vertical foot	$ _____	$ _____
4c	18 vert. ft.	Furnish and install drain manhole, Type "D"		
		_____ per vertical foot	$ _____	$ _____
4d	60 vert. ft.	Furnish and install drain manhole, Type "E"		
		_____ per vertical foot	$ _____	$ _____

SUBTOTAL PAGE 00300-10 _____

CITY OF NEW BEDFORD, MASSACHUSETTS
WASTEWATER SYSTEM IMPROVEMENTS
PHASE I - COGGESHALL STREET SEWER SEPARATION
BID NO. 15439042
PROJECT NO. CWSRF 3858

BID FORM

Item No.	Estimated Quantity	Brief Description of Items With Unit Bid Price in Words	Unit Bid Price In Figures	Amount in Figures
4e	90 vert. ft.	Furnish and install drain manhole, Type "F"		
		_____ per vertical foot	$ _____	$ _____
4f	3 ea.	Furnish and install 48-in. tee for drain manhole Type "A"		
		_____ each	$ _____	$ _____
4g	12 vert. ft.	Furnish and install new 6-ft. diameter precast concrete sewer manhole, Type "D"		
		_____ per vertical foot	$ _____	$ _____
4h	90 vert. ft.	Furnish and install new 5-ft. diameter precast concrete sewer manhole, Type "E"		
		_____ per vertical foot	$ _____	$ _____
4i	95 vert. ft.	Furnish and install new 4-ft. diameter precast concrete sewer manhole, Type "F"		
		_____ per vertical foot	$ _____	$ _____

SUBTOTAL PAGE 00300-11 _____

CITY OF NEW BEDFORD, MASSACHUSETTS
WASTEWATER SYSTEM IMPROVEMENTS
PHASE I - COGGESHALL STREET SEWER SEPARATION
BID NO. 15439042
PROJECT NO. CWSRF 3858

BID FORM

Item No.	Estimated Quantity	Brief Description of Items With Unit Bid Price in Words	Unit Bid Price In Figures	Amount in Figures
4j	115 vert. ft.	Furnish and install catch basins (sidewalk or street)		
		_____ per vertical foot	$ _____	$ _____
4k	1 ea.	Furnish and install concrete block gutter inlets		
		_____ each	$ _____	$ _____
4l	1 ea.	Convert existing Bradley Head catch basin to standard drain manhole		
		_____ each	$ _____	$ _____
5	100 lin. ft.	Furnish and install all pipe and appurtenances required to replace lead water service connections; all sizes		
		_____ per linear foot	$ _____	$ _____
6	L.S.	Utility Relocation Coordination		
		_____ Lump Sum		$ _____

SUBTOTAL PAGE 00300-12 _____

CITY OF NEW BEDFORD, MASSACHUSETTS
WASTEWATER SYSTEM IMPROVEMENTS
PHASE I - COGGESHALL STREET SEWER SEPARATION
BID NO. 15439042
PROJECT NO. CWSRF 3858

BID FORM

Item No.	Estimated Quantity	Brief Description of Items With Unit Bid Price in Words	Unit Bid Price In Figures	Amount in Figures
7a	3,100 cu. yds.	Furnish and install gravel base course for paving subbase and miscellaneous uses		
		_____ per cubic yard	$ _____	$ _____
7b	250 cu. yds.	Furnish and install screened gravel for miscellaneous uses		
		_____ per cubic yard	$ _____	$ _____
7c	200 cu. yds.	Furnish and install controlled low-strength material		
		_____ per cubic yard	$ _____	$ _____
8a	950 cu. yds.	Rock and boulder excavation and backfill		
		Sixty Five Dollars per cubic yard	$65.00	$61,750.00
8b	950 cu. yds.	Additional payment for rock and boulder excavation over the established price		
		_____ per cubic yard	$ _____	$ _____

SUBTOTAL PAGE 00300-13 _____

CITY OF NEW BEDFORD, MASSACHUSETTS
WASTEWATER SYSTEM IMPROVEMENTS
PHASE I - COGGESHALL STREET SEWER SEPARATION
BID NO. 15439042
PROJECT NO. CWSRF 3858

BID FORM

Item No.	Estimated Quantity	Brief Description of Items With Unit Bid Price in Words	Unit Bid Price In Figures	Amount in Figures
9	100 cu. yds.	Excavation below grade and refill		
		_____ per cubic yard	$ _____	$ _____
10a-1	9,100 sq. yds.	Furnish and install initial trench-width pavement in City streets, 4-in. thick, Hot Mix Asphalt binder course		
		_____ per square yard	$ _____	$ _____
10a-2	400 sq. yds.	Furnish and install initial trench-width pavement in City sidewalks, 2-in. thick, Hot Mix Asphalt binder course		
		_____ per square yard	$ _____	$ _____
10b	310 sq. yds.	Furnish and install final full-width pavement in Sawyer Street		
		_____ per square yard	$ _____	$ _____
10c	4,550 sq. yds.	Furnish and install final full width pavement, including 2-in. thick Hot Mix Asphalt surface course from curb to curb, leveling course as required, and all required cold planing		
		_____ per square yard	$ _____	$ _____

SUBTOTAL PAGE 00300-14 _____

CITY OF NEW BEDFORD, MASSACHUSETTS
WASTEWATER SYSTEM IMPROVEMENTS
PHASE I - COGGESHALL STREET SEWER SEPARATION
BID NO. 15439042
PROJECT NO. CWSRF 3858

BID FORM

Item No.	Estimated Quantity	Brief Description of Items With Unit Bid Price in Words	Unit Bid Price In Figures	Amount in Figures
10d	30 sq. yds.	Furnish and install State Highway pavement (controlled density fill, 4-in. thick Hot Mix Asphalt base, 3-in. thick Hot Mix Asphalt top course)		
		_____ per square yard	$ _____	$ _____
11	2 ea.	Furnish and install flexible flap valves		
		_____ each	$ _____	$ _____
12a	L.S.	Mitchell and Sawyer Street Cast-in-Place Structure		
		_____ Lump Sum		$ _____
12b	L.S.	Coggeshall Street at Belleville Avenue Drain Crossing - Sheet No. 6, Sta. 9+84 to Sta. 10+59		
		_____ Lump Sum		$ _____
12c	L.S.	Coggeshall Street at Mitchell Street Drain Crossing - Sheet No. 6, Profile "F" Sheet No. 11, Sta. 0+00 to Sta. 0+40		
		_____ Lump Sum		$ _____

SUBTOTAL PAGE 00300-15 _____

CITY OF NEW BEDFORD, MASSACHUSETTS
WASTEWATER SYSTEM IMPROVEMENTS
PHASE I - COGGESHALL STREET SEWER SEPARATION
BID NO. 15439042
PROJECT NO. CWSRF 3858

BID FORM

Item No.	Estimated Quantity	Brief Description of Items With Unit Bid Price in Words	Unit Bid Price In Figures	Amount in Figures
12d	L.S.	Coggeshall Street at No. Front Street, removal of contaminated, abadonded sewer Sheet No. 7, STA 14+90		
		_____ Lump Sum		$ _____
12e	L.S.	Removal and replacement of existing 48-in PCCP transmission water main, Sheet No. 9		
		_____ Lump Sum		$ _____
12f	L.S.	Coggeshall Street Precast Structure - Sheet No. 7, STA 14+55		
		_____ Lump Sum		$ _____
12g	L.S.	Sawyer Street at Jean Street drain connection to existing brick drain – Sheet No. 9A		
		_____ Lump Sum		$ _____
13	L.S.	Dewatering and Drainage		
		_____ Lump Sum		$ _____

SUBTOTAL PAGE 00300-16 _____

CITY OF NEW BEDFORD, MASSACHUSETTS
WASTEWATER SYSTEM IMPROVEMENTS
PHASE I - COGGESHALL STREET SEWER SEPARATION
BID NO. 15439042
PROJECT NO. CWSRF 3858

BID FORM

Item No.	Estimated Quantity	Brief Description of Items With Unit Bid Price in Words	Unit Bid Price In Figures	Amount in Figures
14	50 cu. yds.	Miscellaneous Concrete		
		_____ per cubic yard	$ _____	$ _____
15	L.S.	Miscellaneous Work and Cleanup		
		_____ Lump Sum		$ _____
16	L.S.	Connections to and work on the existing drain and sewer system and work by others		
		_____ Lump Sum		$ _____
17	175 cu. yds.	Test Pits		
		_____ per cubic yard	$ _____	$ _____
18	150 cu. yds.	Loaming and Seeding		
		_____ per cubic yard	$ _____	$ _____
19	L.S.	Traffic Management		
		_____ Lump Sum		$ _____

SUBTOTAL PAGE 00300-17 _____

CITY OF NEW BEDFORD, MASSACHUSETTS
WASTEWATER SYSTEM IMPROVEMENTS
PHASE I - COGGESHALL STREET SEWER SEPARATION
BID NO. 15439042
PROJECT NO. CWSRF 3858

BID FORM

Item No.	Estimated Quantity	Brief Description of Items With Unit Bid Price in Words	Unit Bid Price In Figures	Amount in Figures
20a	500 cu.yds	Excavation of contaminated materials _____ per cubic yard	$ _____	$ _____
20b	75,000 gal.	Contaminated groundwater dewatering on-site treatment and discharge _____ per gallon	$ _____	$ _____
20c	250 tons	Transportation and reuse of contaminated material to an in-state landfill _____ per ton	$ _____	$ _____
20d	250 tons	Transportation and recycling of contaminated material to a recycling facility _____ per ton	$ _____	$ _____
20e	250 tons	Transportation and disposal of contaminated material to an out-of-state landfill _____ per ton	$ _____	$ _____

SUBTOTAL PAGE 00300-18 _____

CITY OF NEW BEDFORD, MASSACHUSETTS
WASTEWATER SYSTEM IMPROVEMENTS
PHASE I - COGGESHALL STREET SEWER SEPARATION
BID NO. 15439042
PROJECT NO. CWSRF 3858

BID FORM

Item No.	Estimated Quantity	Brief Description of Items With Unit Bid Price in Words	Unit Bid Price In Figures	Amount in Figures
21a	660 lin. ft.	Cured-in-Place Pipe Liner for existing 24-in. drains listed in Section 01010, Table B		
		_____ per linear foot	$ _____	$ _____
21b	95 lin. ft.	Cured-in-Place Pipe Liner for existing 21-in. sewers listed in Section 01010, Table B		
		_____ per linear foot	$ _____	$ _____
21c	910 lin. ft.	Cured-in-Place Pipe Liner for existing 15-in. sewers listed in Section 01010, Table B		
		_____ per linear foot	$ _____	$ _____
21d	2,480 lin. ft.	Cured-in-Place Pipe Liner for existing 10-in. sewers listed in Section 01010, Table B		
		_____ per linear foot	$ _____	$ _____

SUBTOTAL PAGE 00300-19 _____

CITY OF NEW BEDFORD, MASSACHUSETTS
WASTEWATER SYSTEM IMPROVEMENTS
PHASE I - COGGESHALL STREET SEWER SEPARATION
BID NO. 15439042
PROJECT NO. CWSRF 3858

BID FORM

Item No.	Estimated Quantity	Brief Description of Items With Unit Bid Price in Words	Unit Bid Price In Figures	Amount in Figures
22	11 ea.	Open cut excavation spot repair, all sizes, for pipes listed in Section 01010, Table A		
		_____ each	$ _____	$ _____
23	1,700 lin. ft.	Heavy cleaning of existing sewers and drains all sizes, for pipes listed in Section 01010, Table D.		
		_____ per linear foot	$ _____	$ _____
24	85 ea.	Cured-In-Place Pipe Liner for service connections listed in Section 01010, Table C		
		_____ each	$ _____	$ _____
25	30 ea.	Remove existing protruding taps by grinding and sealing, or by other acceptable trenchless procedures		
		_____ each	$ _____	$ _____
26	13 vert. ft.	Clean, repair, and install monolithic lining in existing sewer manholes		
		_____ per vertical foot	$ _____	$ _____

SUBTOTAL PAGE 00300-20 _____

CITY OF NEW BEDFORD, MASSACHUSETTS
WASTEWATER SYSTEM IMPROVEMENTS
PHASE I - COGGESHALL STREET SEWER SEPARATION
BID NO. 15439042
PROJECT NO. CWSRF 3858

SUMMARY OF BID

SUBTOTAL PAGE 00300-20:	$ _____
SUBTOTAL PAGE 00300-19:	$ _____
SUBTOTAL PAGE 00300-18:	$ _____
SUBTOTAL PAGE 00300-17:	$ _____
SUBTOTAL PAGE 00300-16:	$ _____
SUBTOTAL PAGE 00300-15:	$ _____
SUBTOTAL PAGE 00300-14:	$ _____
SUBTOTAL PAGE 00300-13:	$ _____
SUBTOTAL PAGE 00300-12:	$ _____
SUBTOTAL PAGE 00300-11:	$ _____
SUBTOTAL PAGE 00300-10:	$ _____
SUBTOTAL PAGE 00300-9:	$ _____
SUBTOTAL PAGE 00300-8:	$ _____
SUBTOTAL PAGE 00300-7:	$ _____
SUBTOTAL PAGE 00300-6:	$ _____
SUBTOTAL PAGE 00300-5:	$ _____

CITY OF NEW BEDFORD, MASSACHUSETTS
WASTEWATER SYSTEM IMPROVEMENTS
PHASE I - COGGESHALL STREET SEWER SEPARATION
BID NO. 15439042
PROJECT NO. CWSRF 3858

SUMMARY OF BID

		SUBTOTAL PAGE 00300-4:	$ _____
		SUBTOTAL PAGE 00300-3:	$ _____
		SUBTOTAL PAGE 00300-2:	$ _____
		SUBTOTAL BID PRICE	$ _____
27	L.S.	Mobilization - not to exceed 5% of the Subtotal Bid Price above	
		_____ lump sum	$ _____
		TOTAL BID PRICE	$ _____

Should certain additional work be required, or should any quantity of certain classes of work be increased from those on which the bid is based, by order or approval of the Engineer, the undersigned agrees that the following supplemental unit prices be the basis of payment to him for work associated with providing/installing/completing the following for such addition or increase in the work.

Description	Unit	Unit Price
Common Fill	Cu. Yd.	$5.00
Steel Sheeting left in place	Ton	$ 1,000.00
Wood Sheeting left in place	MBFM	$ 1,100.00

The undersigned agrees that extra work, if any, will be performed in accordance with Article 10 of the Conditions of the Contract and will be paid for in accordance with Article 11 of the Conditions of the Contract.

The bidding and award of this Contract will be in accordance with M.G.L. Chapter 30, Section 39M.

The undersigned must furnish a 100 percent Performance Bond and a 100 percent Payment Bond with a surety company acceptable to Owner.

Amounts shall be shown in both words and figures, where indicated. In case of discrepancy, the amount shown in words will govern.

The above prices shall include all labor, materials, bailing, shoring, removal, overhead, profit, insurance and incidentals required to complete the Work.

The names and residences of all persons and parties interested in the foregoing Bid as principals are as follows:

(Give first and last names in full. In the case of a corporation, see Article 8.3 of the Instructions to Bidders, in the case of a limited liability company (LLC), see Article 8.4 of the Instructions to Bidders, in the case of a partnership, see Article 8.5 of the Instructions to Bidders.)

_____

_____

_____

The attached Department of Environmental Protection Diesel Retrofit Program Form must be completed and submitted as part of the Bid Proposal.

Pursuant to M.G.L. Ch. 62C, sec. 49A, I certify under the penalties of perjury that I, to my best knowledge and belief, have filed all state tax returns and paid all state taxes required under law.

The undersigned hereby certifies that he is able to furnish labor that can work in harmony with all other elements of labor employed or to be employed on the work; that all employees to be employed at the worksite will have successfully completed a course in construction safety and health approved by the United States Occupational Safety and Health Administration that is at least 10 hours in duration at the time the employee begins work and who shall furnish documentation of successful completion of said course with the first certified payroll report for each employee.

The undersigned bidder hereby certifies he/she will comply with the specific affirmative action steps contained in the Equal Employment Opportunity/Affirmative Action (EEO/AA) provisions of this Contract, including compliance with the Disadvantaged Business Enterprise provisions as required under these contract provisions. The Contractor receiving the award of the contract shall incorporate the EEO/AA provisions of this contract into all subcontracts and purchase orders so that such provisions will be binding upon each subcontractor or vendor.

Bidders must fully comply with Subpart C of 2 CFR Part 180 and 2 CFR Part 1532, entitled Responsibilities of Participants Regarding Transactions (Doing Business with Other Persons). Contractors, subcontractors, or suppliers that appear on the Excluded Parties List System at www.sam.gov are not eligible for award of any contracts funded by the Massachusetts State Revolving Fund.

The undersigned hereby certifies under the penalties of perjury that this bid is in all respects bona fide, fair and made without collusion or fraud with any other person. As used in this section, the word "person" shall mean any natural person, joint venture, partnership, corporation, limited liability company, or other business or legal entity. The undersigned further certifies under penalty of perjury that the said undersigned is not presently debarred from doing public construction work in the Commonwealth under the provisions of Section Twenty-nine F of Chapter Twenty-nine, or any other applicable debarment provisions of any other chapter of the General Laws or any rule or requisition promulgated thereunder; and is not presently debarred, suspended, proposed for debarment, declared ineligible, or voluntarily excluded from covered transactions by any Federal department or agency.

_____
Social Security Number
or Federal Identification
Number

_____
Signature of Individual or
Corporate Name

By: _____
Corporate Officer (if applicable)

Notice of acceptance should be mailed, faxed, or delivered to the following:

_____
(Name)

By: _____
(Title)

_____
(Business Address)

_____
(City and State)

Date: _____

If the Bidder is a corporation, indicate State of incorporation under signature, and affix corporate seal; if a partnership, give full names and residential addresses, if different from business address.

© 2015 CDM Smith
All Rights Reserved

CITY OF NEW BEDFORD, MASSACHUSETTS

WASTEWATER SYSTEM IMPROVEMENTS

PHASE I – COGGESHALL STREET SEWER SEPARATION

BID NO. 15439042

PROJECT NO. CWSRF 3858

AGREEMENT

THIS AGREEMENT made as of the _____ day of _____ in the year 2015 by and between The City of New Bedford, Massachusetts, acting through its Department of Public Infrastructure hereinafter called OWNER and _____ with legal address and principal place of business at _____ _____ hereinafter called CONTRACTOR. OWNER and CONTRACTOR in consideration of the mutual covenants hereinafter set forth, agree as follows:

ARTICLE 1. WORK.

1.1 CONTRACTOR shall perform the Work as specified or indicated in the Contract Documents. The Work is as described in SECTION 01010.

ARTICLE 2. ENGINEER.

2.1 The Project has been designed by CDM Smith, 260 West Exchange Street, Providence, RI 02903 who will act as ENGINEER in connection with completion of the Work in accordance with the Contract Documents.

ARTICLE 3. CONTRACT TIME.

3.1 The Contract Time shall be 365 Calendar Days commencing twenty days following the Effective Date of this Agreement.

3.2 CONTRACTOR agrees that the Work shall be prosecuted regularly, diligently and uninterruptedly and at such rate of progress as will insure full completion thereof within the Contract Time stated above. It is expressly understood and agreed, by and between CONTRACTOR and OWNER that the Contract Time is reasonable for the completion of the Work, taking into consideration the average climatic range and usual industrial conditions prevailing in this locality.

ARTICLE 4. CONTRACT PRICE.

4.1 OWNER will pay CONTRACTOR for performance of the Work in accordance with the Contract Documents in current funds at the lump sum and unit prices agreed upon in the CONTRACTOR's Bid Form attached to this Agreement.

4.2 As per DEP's Policy Memorandum No.10 - the agreed upon DIRECT LABOR MARKUP (percentage) for Change Orders on this project shall be ___ percent.

ARTICLE 5. APPLICATIONS FOR PAYMENT

5.1 CONTRACTOR shall submit Applications for Payment in accordance with Article 14 of the Conditions of the Contract. Applications for Payment will be processed by ENGINEER as provided in the Conditions of the Contract.

ARTICLE 6. PROGRESS AND FINAL PAYMENTS

6.1 OWNER will make progress payments on account of the Contract Price on the basis of CONTRACTOR's Applications for Payment as recommended by ENGINEER, monthly during construction as provided below. All progress payments will be on the basis of the progress of the Work measured by the schedule of values provided for in Paragraph 14.01 of the Conditions of the Contract.

6.2 OWNER will make progress and final payments as provided in Article 14 of the Conditions of the Contract and in accordance with the applicable Massachusetts General Law.

ARTICLE 7. LIQUIDATED DAMAGES

7.1 OWNER and CONTRACTOR recognize that time is of the essence of this Agreement and that OWNER will suffer financial loss if the Work is not completed within the Contract Time specified in Article 3 above, plus any extensions thereof allowed in accordance with Article 12 of the General Conditions. They also recognize the delays, expense and difficulties involved in proving, in a legal or arbitration proceeding, the actual loss suffered by OWNER if the Work is not completed on time. Accordingly, instead of requiring any such proof OWNER and CONTRACTOR agree that as liquidated damages for delay (but not as a penalty) CONTRACTOR shall pay OWNER $2,500.00 per day for each calendar day of delay until the Work is complete.

7.2 Provided, that CONTRACTOR shall not be charged with liquidated damages or any excess cost when the delay in completion of the Work is for reasons included in Paragraph 12.03 of the General Conditions.

7.3 Provided, further, that CONTRACTOR shall furnish OWNER the required notification of such delays in accordance with Paragraph 12.02 of the General Conditions.

ARTICLE 8. ASSURANCE

8.1 CONTRACTOR has familiarized himself with the nature and extent of the Contract Documents, Work, locality, and with all local conditions and Federal, State and local laws, ordinances, rules and regulations that in any manner may affect cost, progress or performance of the Work.

8.2 CONTRACTOR has studied carefully all reports of investigations and tests of subsurface and latent physical conditions at the site or otherwise affecting cost, progress or performance of the Work which were relied upon by ENGINEER in the preparation of the Drawings and Specifications and which have been identified in Article 4 of the Supplementary Conditions.

8.3 CONTRACTOR has made or caused to be made examinations, investigations and tests and studies of such reports and related data in addition to those referred to in the above paragraph as CONTRACTOR deems necessary for the performance of the Work at the Contract Price within the Contract Time and in accordance with the other terms and conditions of the Contract Documents; and no additional examinations, investigations, tests, reports or similar data are or will be required for such purposes.

8.4 CONTRACTOR has correlated the results of all such observations, examinations, investigations, tests, reports and data with the terms and conditions of the Contract Documents.

8.5 CONTRACTOR has given ENGINEER written notice of any conflict, error or discrepancy that CONTRACTOR has discovered in the Contract Documents and the written resolution thereof by ENGINEER is acceptable to CONTRACTOR.

8.6 CONTRACTOR agrees that the Contract Documents are sufficient in scope and detail to indicate and convey understanding of all terms and conditions for performance of the Work.

ARTICLE 9. CONTRACT DOCUMENTS.

9.1 The Contract Documents which comprise the Contract between OWNER and CONTRACTOR are attached hereto and made a part hereof and consist of the following:

9.1.1 Invitation To Bid.

9.1.2 Instructions To Bidders.

9.1.3 Bid Form.

9.1.4 This Agreement.

9.1.5 Performance Bond, EJCDC Document C-610, 2010 edition, Payment Bond, EJCDC Document C-615, 2010 edition, and other required Bonds.

9.1.6 General Conditions, EJCDC Document No. C-700, 2007 edition.

9.1.7 Supplementary Conditions Parts I and II.

9.1.8 Specifications (as listed in Table of Contents).

9.1.9 Drawings, numbered 0309-P-4482 through 0309-P-4536, inclusive and dated February 2015.

9.1.10 Addenda numbers _____ to _____, inclusive.

9.1.11 Any modification, including Change Orders, duly delivered after execution of Agreement.

ARTICLE 10. MISCELLANEOUS

10.1 Terms used in this Agreement which are defined in Article 1 of the Conditions of the Contract shall have the meanings assigned in the Conditions of the Contract.

10.2 Neither OWNER nor CONTRACTOR shall, without the prior written consent of the other, assign or sublet in whole or in part any interest under any of the Contract Documents; and, specifically but without limitation, CONTRACTOR shall not assign any monies due or to become due without the prior written consent of OWNER. In case CONTRACTOR assigns all or any part of any monies due or to become due under this Contract, the instrument of assignment shall contain a clause substantially to the effect that it is agreed that the right of the assignee in and to any monies due or to become due to CONTRACTOR shall

be subject to prior claims of all persons, firms and corporations for services rendered or materials supplied for the performance of the Work called for in this Contract.

10.3 OWNER and CONTRACTOR each binds himself, his partners, successors, assigns and legal representatives in respect to all covenants, agreements and obligations contained in the Contract Documents.

10.4 The Contract Documents constitute the entire agreement between OWNER and CONTRACTOR and may only be altered, amended or repealed by a Modification.

ARTICLE 11. MASSACHUSETTS EQUAL OPPORTUNITY REQUIREMENTS

11.1 The fair share goals for the Commonwealth of Massachusetts disadvantaged business enterprise (DBE) participation for this contract are a minimum of 3.40 percent Disadvantaged Minority Business Enterprise D/MBE participation and 3.80 percent Disadvantaged Women Business Enterprise D/WBE participation, applicable to the total dollar amount paid for the construction contract. The City of New Bedford goals for this project are a minimum of 18.00 percent Disadvantaged Minority Business Enterprise D/MBE participation and 3.80 percent Disadvantaged Women Business Enterprise D/WBE participation. The higher of the two goals shall govern (City of New Bedford goals). The CONTRACTOR shall take all affirmative steps necessary to achieve this goal, and shall provide reports documenting the portion of contract and subcontract dollars paid to DBEs, and its efforts to achieve the goals, with each invoice submitted or at such greater intervals as specified by the City of New Bedford, Massachusetts. The CONTRACTOR shall require similar reports from its subcontractors.

11.2 Equal Employment Opportunity/Affirmative Action (EEO/AA) Requirements

During the performance of this Contract, the CONTRACTOR agrees as follows:

1. The CONTRACTOR will not discriminate against any employee or applicant for employment because of race, color, religion, sex, or national origin. The CONTRACTOR will take affirmative action to ensure that applicants are employed, and that employees are treated during employment, without regard to their race, color, religion, sex or national origin. Such action shall include, but not be limited to the following: employment, upgrading, demotion, or transfer; recruitment or recruitment advertising; layoff or termination; rates of pay or other forms of compensation; and selection for training, including apprenticeship. The CONTRACTOR agrees to post in conspicuous places, available to employees and applicants for employment, notices to be provided by the contracting officer setting forth the provisions of this nondiscrimination clause.

2. The CONTRACTOR will, in all solicitations or advertisements for employees placed by or on behalf of the CONTRACTOR, state that all qualified applicants will receive consideration for employment without regard to race, color, religion, sex or national origin.

3. The CONTRACTOR will send to each labor union or representative of workers with which he has a collective bargaining agreement or other contract or understanding, a notice, to be provided by the agency contracting officer, advising the labor union or workers' representative of the CONTRACTOR's commitments under Section 202 of Executive Order No. 11246 of September 24, 1965, and shall post copies of the notice in conspicuous places available to employees and applicants for employment.

4. The CONTRACTOR will comply with all provisions of Executive Order No. 11246 of Sept. 24, 1965, and of the rules, regulations, and relevant orders of the Secretary of Labor.

5. The CONTRACTOR will furnish all information and reports required by Executive Order No. 11246 of September 24, 1965, and by the rules, regulations, and orders of the Secretary of Labor, or pursuant thereto, and will permit access to his books, records, and accounts by the contracting agency and the Secretary of Labor for purposes of investigation to ascertain compliance with such rules, regulations, and orders. Comp., p. 684, EO 12086 of Oct. 5, 1978, 43 FR 46501, 3 CFR, 1978 Comp., p. 230.

6. In the event of the CONTRACTOR's noncompliance with the nondiscrimination clauses of this Contract or with any of such rules, regulations, or orders, this Contract may be cancelled, terminated, or suspended in whole or in part and the CONTRACTOR may be declared ineligible for further Government contracts in accordance with procedures authorized in Executive Order No. 11246 of Sept. 24, 1965, and such other sanctions may be imposed and remedies invoked as provided in Executive Order No. 11246 of September 24, 1965, or by rule, regulation, or order of the Secretary of Labor, or as otherwise provided by law.

7. The CONTRACTOR will include the provisions of paragraphs (1) through (7) in every subcontract or purchase order unless exempted by rules, regulations, or orders of the Secretary of Labor issued pursuant to Section 204 of Executive Order No. 11246 of September 24, 1965, so that such provisions will be binding upon each subcontractor or vendor. The CONTRACTOR will take such action with respect to any subcontract or purchase order as may be directed by the Secretary of Labor as a means of enforcing such provisions including sanctions for noncompliance: Provided, however, that in the event the CONTRACTOR becomes involved in, or is threatened with, litigation with a subcontractor or a vendor as a result of such direction, the CONTRACTOR may request the United States to enter into such litigation to protect the interests of the United States.

11.3 The CONTRACTOR shall not participate in or cooperate with an international boycott, as defined in Section 999(b)(3) and (4) of the Internal Revenue Code of 1986, as amended, or engage in conduct declared to be unlawful by Section 2 of Chapter 151E of the Massachusetts General Laws.

ARTICLE 12. AMERICAN IRON AND STEEL (AIS) REQUIREMENTS

12.1 The Contractor acknowledges to and for the benefit of the City of New Bedford, Massachusetts ("Owner") and the Commonwealth of Massachusetts (the "State") that it understands the goods and services under this Agreement are being funded with monies made available by the Clean Water State Revolving Fund and/or Drinking Water State Revolving Fund that have statutory requirements commonly known as "American Iron and Steel;" that requires all of the iron and steel products used in the project to be produced in the United States ("American Iron and Steel Requirement") including iron and steel products provided by the Contactor pursuant to this Agreement. The Contractor hereby represents and warrants to and for the benefit of the Purchaser and the State that (a) the Contractor has reviewed and understands the American Iron and Steel Requirement, (b) all of the iron and steel products used in the project will be and/or have been produced in the United States in a manner that complies with the American Iron and Steel Requirement, unless a waiver of the requirement is approved, and (c) the Contractor will provide any further verified information, certification or assurance of compliance with this paragraph, or information necessary to support a waiver of the American Iron and Steel Requirement, as may be requested by the Purchaser or the State. Notwithstanding any other provision of this Agreement, any failure to comply with this paragraph by the Contractor shall permit the Purchaser or State to recover

as damages against the Contractor any loss, expense, or cost (including without limitation attorney's fees) incurred by the Purchaser or State resulting from any such failure (including without limitation any impairment or loss of funding, whether in whole or in part, from the State or any damages owed to the State by the Purchaser). While the Contractor has no direct contractual privity with the State, as a lender to the Purchaser for the funding of its project, the Purchaser and the Contractor agree that the State is a third-party beneficiary and neither this paragraph (nor any other provision of this Agreement necessary to give this paragraph force or effect) shall be amended or waived without the prior written consent of the State.

The CONTRACTOR agrees that it will fully comply with Subpart C of 2 CFR Part 180 and 2 CFR Part 1532, entitled Responsibilities of Participants Regarding Transactions (Doing Business with Other Persons). The CONTRACTOR shall not award any subcontracts or purchase any materials from suppliers that appear on the Excluded Parties List System. The CONTRACTOR shall include this requirement in each subcontract and require it to be included in all subcontracts regardless of tier. The CONTRACTOR shall maintain reasonable records to demonstrate compliance with these requirements.

IN WITNESS WHEREOF, the parties hereto have signed this Agreement in sextuple. Four copies each have been delivered to OWNER and one copy each to CONTRACTOR and ENGINEER. All portions of the Contract Documents have been signed or identified by OWNER and CONTRACTOR or by ENGINEER on their behalf.

This Agreement shall become effective on _____, 2015.

CONTRACTOR_____ OWNER_____
CITY OF NEW BEDFORD, MA

BY_____ BY_____
Jonathan F. Mitchell
Mayor

(CORPORATE SEAL) (CORPORATE SEAL)

Attest_____ Attest_____
Ronald H. Labelle
Commissioner – Department of Public Infrastructure

Address for giving notices Address for giving notices

_____ _____

_____ _____

APPROVED AS TO FORM AND LEGALITY

BY_____ BY_____
City Solicitor Chief Procurement Officer

Pursuant to M.G.L. Chapter 44 Section 3lc, I certify that an appropriation has been made in the total amount of this contract.

Date_____ Signed_____

Title___City Auditor_____

Note: If CONTRACTOR is a corporation, an affidavit giving the principal the right to sign the Agreement must accompany the executed Agreement.

Attachment A-1

Contractor's Certification

A Contractor will not be eligible for award of a contract unless such Contractor has submitted the following certification, which is deemed a part of the resulting contract:

CONTRACTOR'S CERTIFICATION

_____
Name of General Contractor

certifies that:

1. It intends to use the following listed construction trades in the work under contract:

   _____

   _____

2. Will comply with the minority workforce ratio and specific affirmative action steps contained herein; and

3. Will obtain from each of its subcontractors and submit to the contracting or administering agency prior to the award of any subcontract under this contract the subcontractor's certification required by these bid conditions.

_____
Signature of Authorized
Representative of Contractor

EEO-AAO-CCP-Page 7

Attachment A-2

Subcontractor's Certification

Prior to the award of any subcontract, regardless of tier, the prospective subcontractor must execute and submit to the General Contractor the following certification, which is deemed a part of the resulting subcontract:

SUBCONTRACTOR'S CERTIFICATION

_____
Name of the Subcontractor

certifies that:

1. It intends to use the following listed construction trades in the work under the contract:

   _____

   _____

2. Will comply with the minority workforce ratio and specific affirmative action steps contained herein; and

3. Will obtain from each of its subcontractors prior to the award of any subcontract under this contract the subcontractor's certification required by these bid conditions.

_____

Signature of Authorized
Representative of Subcontractor

© 2015 CDM Smith
All Rights Reserved

SECTION 01010
SUMMARY OF WORK

PART 1 GENERAL

1.01 LOCATION OF WORK

A. The work of this Contract is located in the City of New Bedford, Massachusetts.

1.02 SCOPE OF WORK

A. Furnish all labor, materials, equipment and incidentals required and construct the new structures, drains, sewers, and water mains in its entirety as shown on the Drawings and as specified herein.

B. The Work includes, but is not necessarily limited to, furnishing and installing the following drain, sewer and water pipe:

1. Approximately 285 linear feet of 48-in Class IV RC drain pipe;
2. Approximately 405 linear feet of Class V 48-in drain pipe;
3. Approximately 275 linear feet of 30-in RC drain pipe;
4. Approximately 370 linear feet of 24-in. RC drain pipe;
5. Approximately 1,480 linear feet of 18-in RC drain pipe;
6. Approximately 135 linear feet of 12-in. PVC drain pipe;
7. Approximately 565 linear feet of 12-in Class 52 DI drain pipe;
8. Approximately 35 linear feet of 10-in PVC drain pipe;
9. Approximately 95 linear feet of 8-in. PVC drain pipe;
10. Approximately 120 linear feet of 24-in. FRP sewer pipe;
11. Approximately 450 linear feet of 20-in. DI sewer pipe;
12. Approximately 40 linear feet of 18-in. DI sewer pipe;
13. Approximately 440 linear feet of 18-in. SDR 35 PVC sewer pipe;
14. Approximately 225 linear feet of 15-in. SDR 35 PVC sewer pipe;
15. Approximately 65 linear feet of 12-in. SDR 35 PVC sewer pipe;
16. Approximately 335 linear feet of 10-in. SDR 35 PVC sewer pipe;
17. Approximately 305 linear feet of 8-in. SDR 35 PVC sewer pipe;

18. Approximately 1,300 linear feet of 6-in. SDR 35 PVC and/or DI sewer pipe for service connections;

19. Approximately 230 linear feet of 30-in., Class 52, DI water main;

20. Approximately 225 linear feet of 16-in., Class 52, DI water main;

21. Approximately 1,380 linear feet of 12-in., Class 52, DI water main;

22. Approximately 15 linear feet of 10-in., Class 52, DI water main;

23. Approximately 700 linear feet of 8-in., Class 52, DI water main;

24. Approximately 85 linear feet of 6-in., Class 52, DI water main;

25. New sewer and drain manholes and catch basin structures;

26. Three new pre-cast concrete structures.

C. The work in this contract also includes areas of special construction:

1. One new cast-in-place structure at the intersection of Mitchell Street and Sawyer Street;

2. Removal and replacement of existing 48-in. PCCP transmission main in Belleville Avenue with 48-in Ductile Iron pipe;

3. Sawyer Street at Jean Street drain connection to existing brick drain;

4. Cutting, removal and disposal of abandoned, contaminated sewer pipeline prior to installation of the new drain;

5. Construction of sewer and drain crossings as detailed on the Drawings.

D. The Work within this Contract also includes:

1. Installation of new and relocation of existing water and sewer service connections.

2. Connections to and work on existing drain, water and sewer system.

3. Removal and delivery of existing reinforced concrete sub-base and cobblestones.

4. Heavy cleaning, open excavation spot repair, cured-in-place lining and removal of existing protruding taps on existing drain and sewer pipe as detailed in Section 01010 Tables A-D.

5. Pavement, including milling and overlay and State Highway paving utilizing both MassDOT requirements and City requirements.

6. Traffic Management.

7. Excavation and disposal of contaminated material if encountered.

8. Coordination with other construction projects taking place simultaneously such as the New Bedford 36-in Transmission Main Reinforcement Project and the Phase II International Marketplace Project.

9. All other incidental work required to complete the project as specified herein and as shown on the Drawings.

1.03 CONTRACTOR'S USE OF PREMISES

A. Contractor shall have complete and exclusive use of the premises for the performance of the Work.

B. Contractor shall limit the use of the premises for his/her Work and for storage to allow for:

1. Work by other contractors.

2. Owner occupancy

3. Public use.

C. Coordinate use of premises with the City of New Bedford and Engineer.

D. Contractor shall assume full responsibility for security of all his/her and his/her subcontractors materials and equipment stored on the site.

E. If directed by the Owner or Engineer, move any stored items which interfere with operations of Owner or other contractors.

F. Obtain and pay for use of additional storage or work areas if needed to perform the Work.

END OF SECTION

OPEN-CUT EXCAVATION SPOT REPAIR										
LOCATION	TYPE	FROM MH	TO MH	PIPE SIZE (IN)	REACH LENGTH (FT)	PIPE TYPE	LOC. OF DEFECT	APPROX. DEPTH TO INV. (FT)	OBSERVATION OF DEFECT	APPROX. LENGTH EITHER SIDE OF DEFECT
Coggeshall Street	Drain	15	14	24	185	VC	109.5	6	Broken pipe soil visible	3
							168.5	6	Sewer service visible protruding through crown of pipe	3
Belleville Avenue	Sewer	20	9	10	268	VC	162.1	14	Protruding tap break-in (camera can not pass)[2]	3
Belleville Avenue	Drain	19	18	12	288	VC	7.0	6	Complete collapse of pipe	3
							194.4	6	Broken pipe soil visible	3
Coggeshall Street	Sewer	114	121	10	490	VC	292.0	12	Complete collapse of pipe	15
Ashley Boulevard	Sewer	120	114	10	375	VC	35.0	10	Tap Break-In Defective[2]	3

1. See Specification Sections 02140 to 02728 for open-cut sewer installation requirements.
2. Break-in service connection shall be replaced with new ductile iron tee prior to cured-in-place pipe lining work.

TABLE A
NEW BEDFORD, MA
PHASE I - COGGESHALL STREET
SEWER SEPARATION
OPEN-CUT EXCAVATION SPOT REPAIR

CURED-IN-PLACE LINER REPAIR								
LOCATION	Type	FROM MH	TO MH	PIPE SIZE (IN)	REACH LENGTH (FT)	PIPE TYPE	JOINT SPACING (FT)	PROTRUDING TAPS (EA)
Coggeshall Street	Sewer	14	13B	10	228	VCP	3	0
Coggeshall Street	Sewer	13B	13A	10	227	VCP	3	0
Coggeshall Street	Sewer	13A	12	10	219	VCP	3	1
Coggeshall Street	Sewer	12	11	10	207	VCP	2	1
Coggeshall Street	Sewer	11	10	15	155	VCP	Unk.	Unk.
Coggeshall Street[6]	Sewer	10	PS	21	90	RCP	Unk.	Unk.
Mitchell Street	Sewer	28	26	15	279	VCP	Unk.	Unk.
Mitchell Street	Sewer	26	27	15	252	VCP	3	Unk.
Mitchell Street	Sewer	27	11	15	215	VCP	3	Unk.
Belleville Avenue[6]	Sewer	20	9	10	268	VCP	2	7
Howard Avenue[6]	Sewer	116	117	10	200	VCP	3	4
Ashley Boulevard[6]	Sewer	120	114	10	375	VCP	2	2
Coggeshall Street	Sewer	112	114	10	227	VCP	3	0
Coggeshall Street	Sewer	114	121	10	500	VCP	Unk.	Unk.
Coggeshall Street	Drain	15	14	24	185	VCP	2	3
TOTAL					**3,627**			

Notes:

1. All reaches receiving cured-in-place liner repair shall be installed as specified in Section 02769.

2. Sewer services shall be replaced prior to cured-in-place lining. The service connections shall be replaced with a DI branch.

3. Sewer replacement spot repairs shall be completed prior to cured-in-place lining.

4. All service connections shall be cured-in-place pipe lined after the mainline is cured-in-place pipe lined. See Specification Section 02770.

5. Contractor shall verify all pipe diameters prior to cured-in-place pipe lining work.

6. Requires heavy cleaning prior to cured-in-place pipe lining work. See Section 01010 Table D.

TABLE B
NEW BEDFORD, MA
PHASE I - COGGESHALL STREET
SEWER SEPARATION
CURED-IN-PLACE LINER REPAIR SUMMARY

CURED-IN-PLACE PIPE LINER FOR SERVICE CONNECTIONS (0-3 FEET)										
LOCATION	TYPE	FROM MH	TO MH	PIPE SIZE (IN)	REACH LENGTH (FT)	PIPE TYPE	SERVICE CONNECTION LOC. (FT)	BEND AT SERVICE CONNECTION	CLOCK POSITION	OBSERVATION
Coggeshall Street	Sewer	14	13B	10	228	VCP	None	-	-	-
Coggeshall Street	Sewer	13B	13A	10	227	VCP	32	Bend	10	Tap factory service with bend
							65	Bend	12	Tap factory service with bend
Coggeshall Street	Sewer	13A	12	10	219	VCP	54	Unknown	12	Protruding field tapped service (PVC)
							124	Bend	12	Tap factory service with bend
Coggeshall Street	Sewer	12	11	10	207	VCP	10	Bend	12	Tap factory service with bend
							22	Unknown	12	Protruding field tapped service (Cast Iron)
							60	Bend	12	Tap factory service with bend
							87	Bend	12	Tapping saddle service with bend
							110	Bend	12	Tap factory service with bend
Coggeshall Street	Sewer	11	10	15	155	VCP	Unknown	-	-	-
Coggeshall Street	Sewer	10	PS	21	90	RCP	Unknown	-	-	-
Mitchell Street	Sewer	28	26	15	279	VCP	Unknown	-	-	-
Mitchell Street	Sewer	26	27	15	252	VCP	Unknown	-	-	-
Mitchell Street	Sewer	27	11	15	215	VCP	Unknown	-	-	-
Belleville Avenue	Sewer	20	9	10	268	VCP	1	Straight	2	Protruding field tapped service
							2	Bend	10	Field tapped service with bend and grease
							3	Unknown	12	Protruding field tapped service with grease
							15	Bend	1	Tapping saddle service with bend (PVC)
							21	Bend	1	Field tapped service with bend
							31	Unknown	3	Protruding field tapped service with debris
							33	Bend	9	Tap factory service with bend
							43	Straight	12	Field tapped service
							52	Bend	9	Tap factory service with bend
							86	Straight	12	Tapping saddle service (PVC)
							103	Straight	10	Protruding field tapped service
							108	Unknown	3	Protruding field tapped service
							130	Bend	3	Field tapped service with bend and pipe diameter decrease
							162	Straight	9	Protruding field tapped service
							177	Straight	10	Field tapped service
							181	Straight	3	Protruding field tapped service
							181	Bend	9	Tapping saddle service with bend (PVC)
							267	Straight	6	Tap factory drop connection
Howard Avenue	Sewer	116	117	10	200	VCP	29	Straight	12	Field tapped service
							35	Straight	3	Tap factory service
							72	Straight	3	Field tapped service
							113	Straight	3	Protruding field tapped service
							151	Straight	3	Protruding field tapped service
							162	Straight	11	Protruding field tapped service
							173	Straight	12	Protruding field tapped service
Ashley Boulevard	Sewer	120	114	10	375	VCP	4	Straight	9	Tap factory service
							16	Bend	9	Tap factory service with bend and pipe diameter decrease
							36	Straight	3	Protruding field tapped service
							69	Straight	3	Field tapped service
							100	Straight	9	Field tapped service
							127	Straight	3	Field tapped service
							176	Straight	12	Field tapped service
							226	Bend	9	Tap factory service with bend
							236	Straight	3	Field tapped service
							266	Bend	3	Tap factory service with bend
							311	Bend	9	Tap factory service with bend and grease
							323	Straight	9	Field tapped service
							339	Straight	2	Protruding field tapped service
							369	Bend	3	Tap factory service with bend and pipe diameter decrease
Coggeshall Street	Sewer	112	114	10	227	VCP	None	-	-	-
Coggeshall Street	Sewer	114	121	10	500	VCP	Unknown	-	-	-
Coggeshall Street	Drain	15	14	24	185	VCP	24	Straight	9	Protruding field tapped service with debris
							91	Unknown	10	Protruding field tapped service
							158	Unknown	9	Protruding field tapped service with debris

Note:
1. All sewer service connection cured-in-place lining shall be completed after cured-in-place pipe lining of the mainline sewer and shall be in accordance with Specification Section 02770.
2. The distance of each service connection from the "FROM MH" is an approximation. Contractor shall determine the exact distances during TV inspection.

TABLE C
NEW BEDFORD, MA
PHASE I - COGGESHALL STREET
SEWER SEPARATION
CURED-IN-PLACE LINER REPAIR SUMMARY

CLEANING OF SEWER MAINS							
LOCATION	**Type**	**FROM MH**	**TO MH**	**PIPE SIZE (IN)**	**REACH LENGTH (FT)**	**PIPE TYPE**	**NOTES**
Coggeshall Street	Drain	17	16	24	74	VCP	Settled compacted deposits
Cottter Street	Sewer	119	104	8	210	VCP	
No. Front Street	Sewer	118	105	8	393	PVC	Remove rock in pipe
Coggeshall Street	Sewer	10	PS	21	90	RCP	Heavy clean prior to CIPP Lining
Belleville Avenue	Sewer	20	9	10	268	VCP	Heavy clean prior to CIPP Lining
Howard Avenue	Sewer	116	117	10	200	VCP	Heavy clean prior to CIPP Lining
Ashley Boulevard	Sewer	120	114	10	375	VCP	Heavy clean prior to CIPP Lining
TOTAL					**1,610**		

Notes:

1. All reaches receiving cleaning shall be cleaned as specified in Section 02765.

2. All sewer mains receiving cured-in-place pipe lining shall be cleaned prior to cured-in-place pipe lining work. See Table B, Page 01010-5 for a list of sewer mains to be cleaned and cured-in-place pipe lined.

TABLE D
NEW BEDFORD, MA
PHASE I - COGGESHALL STREET
SEWER SEPARATION
SEWER MAIN CLEANING SUMMARY

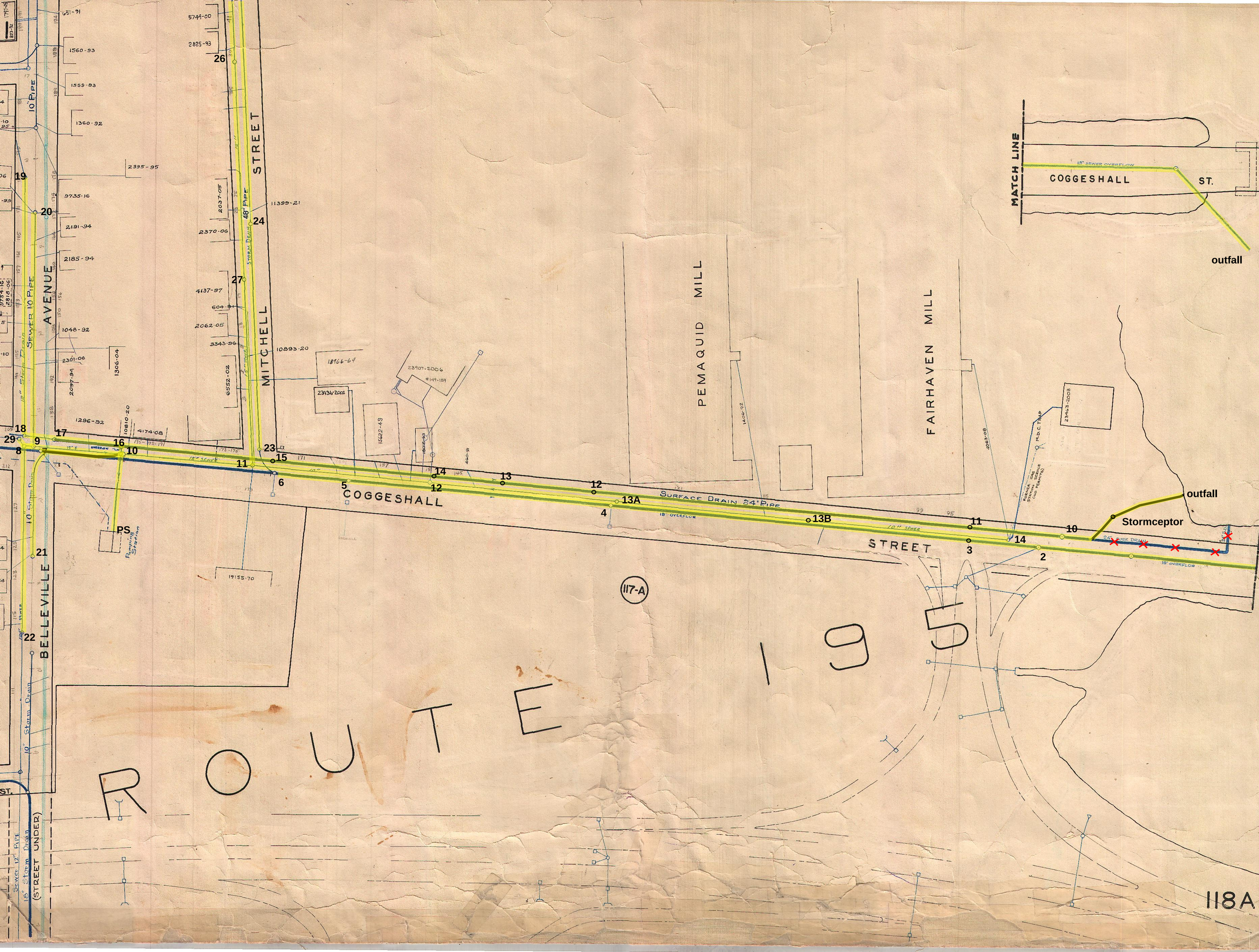
MITCHELL STREET
BELLEVILLE AVENUE
COGGESHALL STREET
PEMAQUID MILL
FAIRHAVEN MILL
ROUTE 195
117-A
118A
MATCH LINE
COGGESHALL ST.
18" SEWER OVERFLOW
outfall
Stormceptor
Surface Drain 24" Pipe
48" Pipe
Storm Drain
Sewer 10" Pipe
10" Pipe
18" Sewer
18" Overflow
Pumping Station
PS
(STREET UNDER)
26
24
27
19
20
18
29
9
8
17
16
10
23
15
11
6
5
14
12
13
13A
4
13B
11
10
3
14
2
21
22

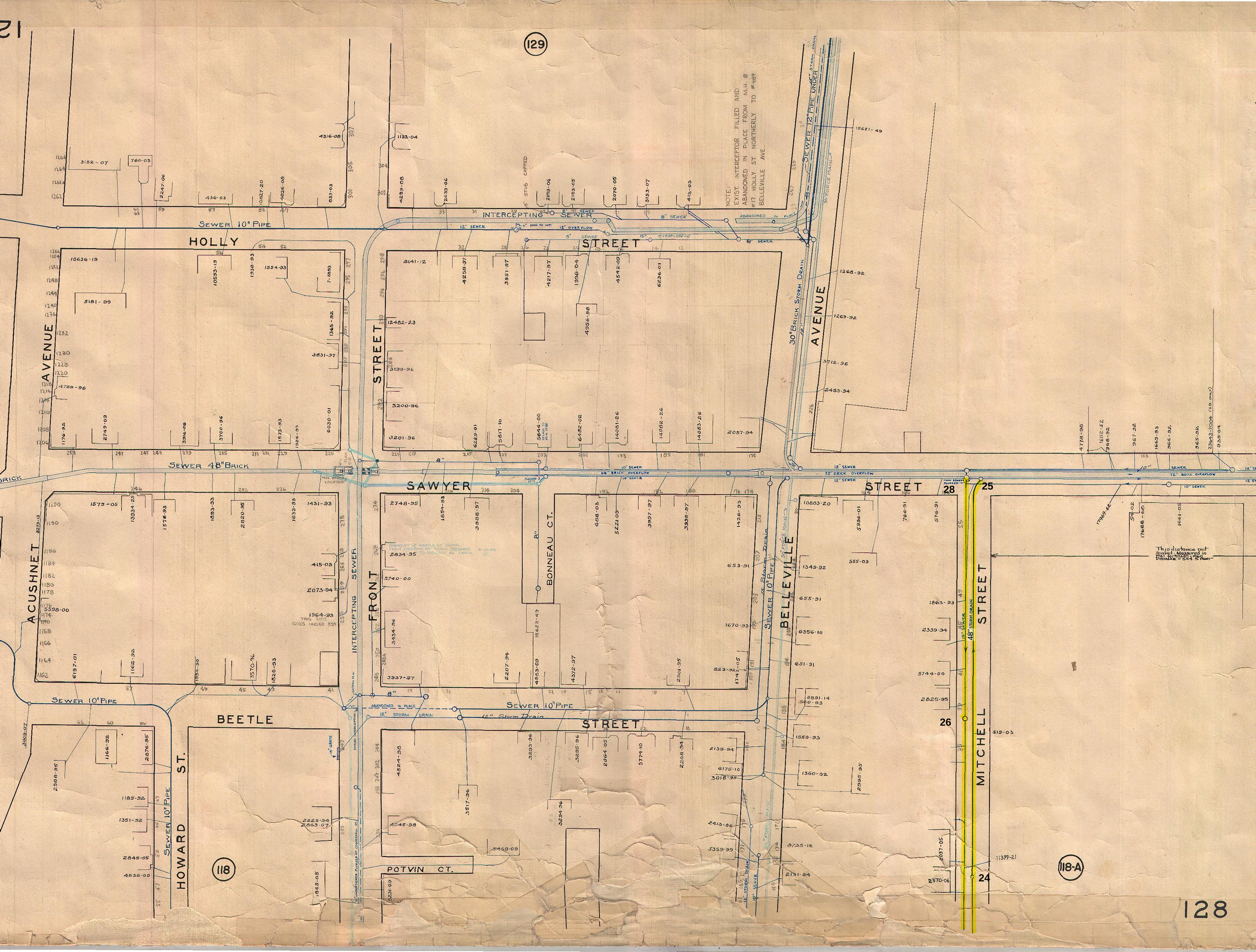
129
HOLLY STREET
AVENUE
STREET
SAWYER STREET
ACUSHNET AVENUE
FRONT STREET
BONNEAU CT.
BELLEVILLE AVENUE
MITCHELL STREET
BEETLE STREET
HOWARD ST.
POTVIN CT.
INTERCEPTING SEWER
SEWER 10" PIPE
SEWER 48" BRICK
SEWER 12" PIPE UNDER
30" BRICK STORM DRAIN
48" STORM DRAIN
12" STORM DRAIN
12" Storm Drain
NOTE: EXIST. INTERCEPTOR FILLED AND ABANDONED IN PLACE FROM M.H. @ #17 HOLLY ST NORTHERLY TO #489 BELLEVILLE AVE.
This distance not scaled. Measured in Rel. to Hollis Dist. = 584.5 Feet
118
118-A
128

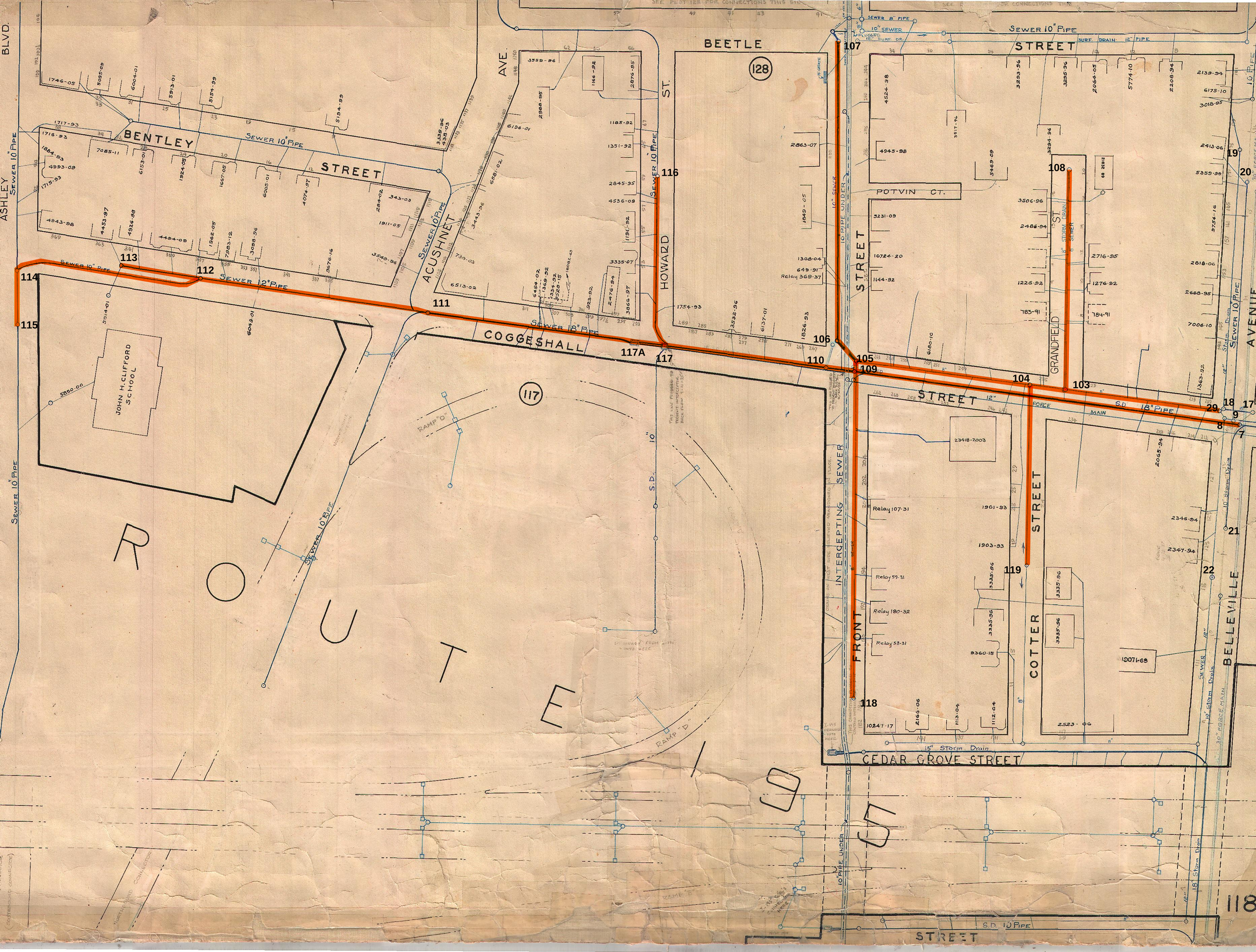
BENTLEY STREET
SEWER 10" PIPE
ASHLEY BLVD.
ACUSHNET AVE.
BEETLE
HOWARD ST.
COGGESHALL
SEWER 12" PIPE
SEWER 18" PIPE
JOHN H. CLIFFORD SCHOOL
ROUTE 195
RAMP "D"
POTVIN CT.
GRANDFIELD ST.
STORM DRAIN
SEWER
10" PIPE UNDER
STREET
SURF. DRAIN 12" PIPE
SEWER 8" PIPE
10" SEWER
S.D. 18" PIPE
FORCE MAIN
INTERCEPTING SEWER
FRONT STREET
COTTER STREET
BELLEVILLE AVENUE
15" Storm Drain
CEDAR GROVE STREET
S.D. 10" PIPE
30" FORCE MAIN
118
117
128
116
115
114
113
112
111
117A
110
109
108
107
106
105
104
103
119
118
29
18
17
9
8
7
19
20
21
22

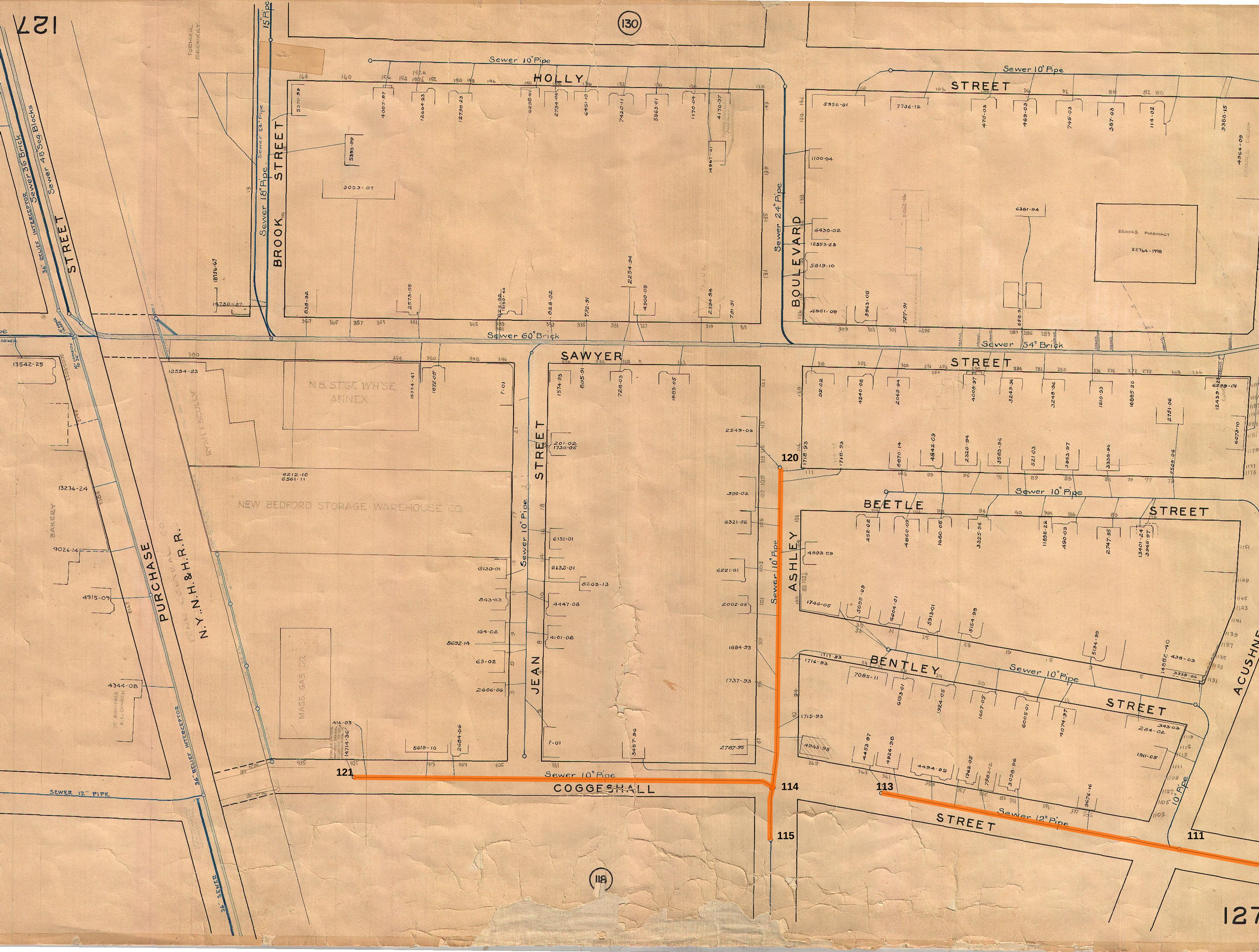
127
130
HOLLY
STREET
Sewer 10" Pipe
BROOK STREET
Sewer 18" Pipe
Sewer 24" Pipe
15" Pipe
Sewer 60" Brick
BOULEVARD
Sewer 24" Pipe
STREET
Sewer 10" Pipe
BROOKS PHARMACY
22764-1998
Sewer 54" Brick
STREET
SAWYER
STREET
Sewer 10" Pipe
N.B. ST'GE WH'SE ANNEX
NEW BEDFORD STORAGE WAREHOUSE CO.
MASS. GAS CO.
RYAN & SCULLY
BAKERY
PURCHASE
STREET
N.Y.N.H.&H.R.R.
36" RELIEF INTERCEPTOR
Sewer 36" Brick
Sewer 48" Seg. Blocks
JEAN
STREET
Sewer 10" Pipe
ST. BONIFACE R.C. CHURCH
SEWER 12" PIPE
36" SEWER
COGGESHALL
Sewer 10" Pipe
BEETLE
STREET
Sewer 10" Pipe
ASHLEY
BENTLEY
STREET
Sewer 10" Pipe
ACUSHNET
STREET
Sewer 12" Pipe
10" Pipe
118
127
111
113
114
115
120
121

SERVICE NO.	STREET	HOUSE NO.	SIDE OF STREET (L/S)	LOCATION (feet)	M/CS	CS/PL	TYPE	DATE	LOCATION NOTES
23697	Belleville Ave	224	L	24.8	Cop	Cop	2 Cop	3/14/1952	E x E Line Belleville Ave
15313	Belleville Ave	206	S	24.8	Lead	Lead	5/8 Lead	8/8/1913	E x Belleville Ave
19437	Ashley Blvd	119-21	S	67.0	Cop	Cop	3/4 Cop	5/18/1923	W x Ashley Blvd
12834	Ashley Blvd	126-28	L	5.0	Lead	Lead	5/8 Lead	7/29/1909	N x Sawyer St
28113	Ashley Blvd	129	L	76.2	Cop	Cop	1 Cop	9/2/1970	W x W Line Ashley Blvd
10171	Coggeshall St	173-75	L	35.0	Lead	Cop	5/8 Lead	6/19/1902	W x Mitchell St
7029	Coggeshall St	171		23.2				11/30/1891	N x Coggeshall St
28142	Coggeshall St	170	S	32.0	Cop	Cop	3/4 Cop	7/7/1970	E x E Line Mitchell St
32505	Coggeshall St	171	L	43.5	Cop	Cop	1 Cop	10/5/2001	N x N Line Coggeshall St
28142	Coggeshall St	170	L	23.8	Cop	Cop	1 Cop	7/7/1970	E x E Line Mitchell St
32585	Coggeshall St	171	L	43.5	Cop	Cop	1 Cop	10/5/2001	N x N Line Coggeshall St
10171	Coggeshall St	173-75	L	35.0	Lead	Cop	5/8 Lead	6/19/1902	W x Mitchell St
29602	Coggeshall St	193-97	L	102.0	Cop	Cop	1 1/2 Cop	6/1/1978	W x W Line Mitchell
26088	Coggeshall St	205	L	42.5	Cop	Cop	3/4 Cop	3/9/1962	E x E Line Belleville Ave
7421	Coggeshall St	209-11	S	37.5	Cop	Lead	5/8 Lead	3/14/1892	N x Coggeshall St
13581	Coggeshall St	215-21	L	59.3	Cop	Lead	5/8 Lead	8/1/1910	W x Belleville Ave
7951	Coggeshall St	214-18	S	50.3	Lead	Lead	1/2 Lead	5/21/1894	W x Belleville Ave
9988	Coggeshall St	381	L	38.6	Cop	Cop	3/4 Cop	11/9/1901	N x Coggeshall St
11514	Coggeshall St	405	S	90.7	Cop	Cop	3/4 Cop	9/10/1906	N x Coggeshall St
10088	Jean St	2	L	73.9	Lead	Cop	5/8 Lead	4/1/1902	N x Coggeshall St
10213	Jean St	4	L	118.3	Cop	Cop	3/4 Cop	8/19/1902	N x Coggeshall St
10079	Jean St	5	S	128.5	Lead	Cop	5/8 Lead	3/10/1902	N x Coggeshall St
25215	Jean St	8	L	151.0	Cop	Cop	1 1/2 Cop	8/21/1957	N x N Line Coggeshall St
10260	Jean St	9	S	159.7	Lead	Cop	5/8 Lead	10/25/1902	N x Coggeshall St
12484	Jean St	10	L	191.7	Lead	Lead	5/8 Lead	12/17/1908	N x Coggeshall St
10634	Jean St	11	S	194.7	Cop	Cop	3/4 Cop	11/19/1903	N x Coggeshall St
9989	Jean St	13	S	245.8	Cop	Cop	3/4 Cop	9/18/1901	S x Sawyer St
9986	Jean St	14	L	231.8	Cop	Cop	3/4 Cop	9/18/1901	S x Sawyer St
9987	Jean St	16	L	195.0	Lead	Lead	5/8 Lead	9/18/1901	S x Sawyer St
11062	Jean St	18	L	172.5	Lead	Cop	5/8 Lead	6/8/1905	S x Sawyer St
10006	Jean St	19	S	146.0	Cop	Cop	3/4 Cop	9/18/1901	S x Sawyer St
10724	Jean St	21	S	87.4	Lead	Lead	5/8 Lead	4/30/1904	S x Sawyer St
32145	Jean St	22	L	100.0	Cop	Cop	1 Cop	6/24/1997	S x S Line Sawyer St
8995	Ashley Blvd	164		45.5	Lead	Lead	5/8 Lead	4/16/1897	S x Tallman St
11753	Ashley Blvd	171		70.0	Lead	Lead	5/8 Lead	6/6/1907	N x Tallman St
11064	Ashley Blvd	174-76		80.0	Cop	Cop	3/4 Cop	6/8/1905	N x Tallman St
12117	Ashley Blvd	178		93.5	Lead	Lead	5/8 Lead	5/22/1908	S x Nye St

SERVICE NO.	STREET	HOUSE NO.	SIDE OF STREET (L/S)	LOCATION (feet)	M/CS	CS/PL	TYPE	DATE	LOCATION NOTES
12337	Ashley Blvd	177-79		90.0	Cop	Cop	3/4 Cop	10/1/1908	S x Nye St
12479	Ashley Blvd	181-83		56.7	Cop	Cop	3/4 Cop	12/14/1908	S x Nye St
12980	Ashley Blvd	185		17.5	Lead	Lead	5/8 Lead	10/12/1909	S x Nye St
10396	Ashley Blvd	186		37.7	Discontinued			5/15/1903	N x Nye St
11823	Ashley Blvd	189		54.0	Cop	Cop	3/4 Cop	7/19/1907	N x Nye St
6397	Belleville Ave	15	S	100.5	Cop	Cop	3/4 Cop	5/9/1896	N x N Line Kilburn St
4618	Belleville Ave	19	S	124.8	Lead	Lead	1/2 Lead	12/3/1883	S x Washburn St
4617	Belleville Ave	25	S	78.8	Cop	Cop	3/4 Cop	12/13/1883	S x Washburn St
7689	Belleville Ave	47	S	59.5	Lead	Lead	1/2 Lead	7/5/1893	N x Washburn St
7248	Belleville Ave	53	S	114.2	Cop	Lead	1 Lead	8/24/1892	N x Washburn St
23251	Belleville Ave	54	L	77.0	Cop	Cop	3/4 Cop	8/4/1950	S x S Line Kenyon St
15313	Belleville Ave	206	S	24.8	Lead	Lead	5/8 Lead	8/8/1913	E x Belleville Ave
6781	Belleville Ave	207	S	78.4	Cop	Cop	3/4 Cop	6/13/1897	S x Sawyer St
22269	Belleville Ave	223	S	77.7	Cop	Cop	3/4 Cop	10/17/1946	S x S Line Sawyer St
7497	Belleville Ave	257	S	30.5	Cop	Cop	3/4 Cop	4/1/1893	N x Holly St
7689	Belleville Ave	47	S	59.5	Lead	Lead	5/8 Lead	7/5/1893	N x Washburn St
26088	Coggeshall St	205	L	42.5	Cop	Cop	3/4 Cop	3/9/1962	E x E Line Belleville Ave
7421	Coggeshall St	209-13	S	37.5	Cop	Lead	5/8 Lead	11/14/1892	N x Coggeshall St
13581	Coggeshall St	215-21	L	59.3	Cop	Lead	5/8 Lead	8/1/1910	W x Belleville Ave
7951	Coggeshall St	216-18	S	50.3	Lead	Lead	1/2 Lead	5/21/1894	W x Belleville Ave
7894	Coggeshall St	222-26	S	86.6	Lead	Lead	5/8 Lead	3/9/1894	W x Belleville Ave
6599	Coggeshall St	234	S	22.9	Lead	Cop	1/2 Lead	9/18/1890	E x Cotter St
7073	Coggeshall St	235-41	L	51.9	Lead	Lead	1/2 Lead	1/14/1892	W x Granfield St
8066	Coggeshall St	242-46		48.1	Discontinued			8/25/1894	S x Coggeshall St
7643	Coggeshall St	243-45	L	77.2	Lead	Lead	1/2 Lead	6/7/1893	W x Granfield St
31784	Coggeshall St	245	L	54.0	Cop	Cop	1 Cop	9/14/1993	W x W Line Granfield St.
7726	Coggeshall St	248-50	S	115.2	Lead	Lead	5/8 Lead	7/20/1893	E x Front St
7081	Coggeshall St	251	L	101.4	Lead	Lead	1/2 Lead	1/22/1892	E x Front St
29918	Coggeshall St	253	L	60.5	Cop	Cop	1 1/2 Cop	4/22/1981	E x E Line No. Front St
23182	Coggeshall St	252-58	S	73.4	Cop	Cop	3 Cop	6/13/1950	E x E Line No. Front St
28500	Coggeshall St	259-63	L	21.7	Cop	Cop	1 Cop	9/8/1971	E x E Line No. Front St
7781	Coggeshall St	267-71	S	35.9	Cop	Cop	3/4 Cop	9/8/1893	N x Coggeshall St
9983	Coggeshall St	273-75	L	68.5	Cop	Cop	1 Cop	9/6/1901	W x Front St
8780	Coggeshall St	277-81	L	69.3	Lead	Lead	5/8 Lead	9/17/1896	E x Howard St
30545	Coggeshall St	283-89	L	34.0	Cop	Cop	1 1/2 Cop	8/20/1986	N x N Line Coggeshall St
6543	Coggeshall St	291-93	L	16.1	Cop	Cop	3/4 Cop	7/17/1890	W x Howard St
31419	Coggeshall St	293-301	L	178.0	Cop	Cop	1 Cop	12/12/1989	E x E Line Acushnet Ave
7398	Coggeshall St	307	L	134.1	Lead	Cop	5/8 Lead	10/29/1892	E x Acushnet Ave
10136	Coggeshall St	311	L	118.7	Cop	Cop	3/4 Cop	3/14/1902	E x Acushnet Ave
28978	Coggeshall St	335	L	60.9	Cop	Cop	1 Cop	10/4/1973	W x W Line Acushnet Ave

SERVICE NO.	STREET	HOUSE NO.	SIDE OF STREET (L/S)	LOCATION (feet)	M/CS	CS/PL	TYPE	DATE	LOCATION NOTES
13588	Coggeshall St	341	L	103.7	Cop	Cop	3/4 Cop	8/5/1910	W x Acushnet Ave
8445	Coggeshall St	351-53	L	155.6	Cop	Cop	3/4 Cop	1/2/1896	W x Acushnet Ave
11196	Coggeshall St	355-57	L	197.8	Cop	Cop	3/4 Cop	10/5/1905	E x Ashley Blvd
10766	Coggeshall St	359	L	171.4	Cop	Cop	3/4 Cop	6/13/1904	E x Ashley Blvd
10655	Coggeshall St	361	L	115.2	Cop	Cop	3/4 Cop	12/22/1903	E x Ashley Blvd
9862	Coggeshall St	362		124.0	C.I.	C.I.	4 C.I.	1/26/1901	E x Ashley Blvd (S.)
23446	Coggeshall St	362	S	101.7	Cop	Cop	3 Cop	6/5/1951	E x E Line Ashley Blvd
9777	Coggeshall St	362		109.0	C.I.	C.I.	2 C.I.	7/27/1900	S x Coggeshall St
9342	Coggeshall St	363	L	76.0	Cop	Cop	3/4 Cop	12/4/1897	E x Ashley Blvd
9513	Coggeshall St	369	L	23.5	Lead	Lead	5/8 Lead	11/16/1989	N x Coggeshall St
8249	Ashley Blvd	87	S	6.4				7/5/1895	N x Coggeshall St
8733	Coggeshall St	379		136.9	Discontinued			10/9/1896	W x Ashley Blvd
9988	Coggeshall St	381	L	38.6	Cop	Cop	3/4 Cop	11/9/1901	N x Coggeshall St
11514	Coggeshall St	405	L	90.7	Cop	Cop	3/4 Cop	9/10/1906	N x Coggeshall St
11549	Coggeshall St	407	L	64.5	Cop	Cop	3/4 Cop	10/17/1906	W x Jean St
12721	Coggeshall St	411	L	86.0	Cop	Cop	2 Cop	6/1/1909	W x Jean St
27866	Coggeshall St	425	L	132.2	Cop	Cop	1 Cop	11/14/1968	E x E Line Purchase St
27867	Coggeshall St	425	L	132.2	C.I.C.L	C.I.C.L	6 C.I.C.L	11/14/1968	E x E Line Purchase St
22048	Coggeshall St	415	L	113.6	Cop	Cop	4 Cop	6/8/1944	E x E Line Purchase St
8995	Ashley Blvd	164	L	45.5	Lead	Lead	5/8 Lead	4/16/1897	S x Tallman St
12980	Ashley Blvd	183	S	17.5	Lead	Lead	5/8 Lead	10/12/1909	S x Nye St
10396	Ashley Blvd	186	L	37.7	Discontinued			5/15/1903	N x Nye St
8995	Ashley Blvd	164	L	45.5	Lead	Lead	5/8 Lead	1897	S x Tallman St

© 2015 CDM Smith
All Rights Reserved

SECTION 01025
MEASUREMENT AND PAYMENT

PART 1 GENERAL

1.01 DRAIN PIPE AND APPURTENANCES (Items 1a thru 1l)

A. Measurement

1. Drain pipe of the type and size specified on the Bid Form (Items 1a thru 1i) will be measured in place on a linear foot basis. Measurement for payment does not signify that the drain line is accepted.

2. Measurement of drain pipe for length will be along the horizontal centerline of the pipe with no deduction for manholes and fittings. Measurement will be to the center of manholes and to the inside face of the wall at drain structures (cast-in-place and pre-cast concrete). Measurement for length will be to the nearest tenth of a foot.

3. Connections to new RC drain (Item 1j) will be measured on an each basis for the number actually installed and accepted by the Engineer.

4. Removal and disposal of existing reinforced concrete sub-base (Item 1k) when encountered will be measured in square yards.

5. Removal and delivery of existing cobble stones to the City of New Bedford (Item 1l) when encountered will be measured in square yards.

B. Payment

1. Payment for furnishing and installing drain pipe of the size and class specified will be made for the respective quantities as determined above at the unit price bid under Items 1a thru 1i in the Bid Form. This price and payment shall be full compensation for cutting and removing existing pavement, sidewalks and curbing; cutting, removal and disposal of existing drain pipe to be replaced; removal and disposal of existing manholes to be replaced; removal and disposal of existing concrete structures to be removed; abandoning in-place existing manholes as shown on the Drawings; removing and delivering manhole frame and cover to the New Bedford DPI for manholes to be replaced or abandoned; coring existing manholes where required to install new pipe; coring new manholes for catch basin connections; CLSM; common fill; site preparation; trench excavation (excluding rock and boulder excavation); backfilling and compaction; impervious dams; restoring the trench surface to grade; furnishing and installing geotextile fabric (if required); screened gravel pipe bedding; select common fill; furnishing, laying, jointing, cleaning and testing the new pipe; sedimentation and erosion control; driving and removing sheeting and bracing; removal and disposal of existing sheeting left in place from previous utility construction work; all restoration and/or replacement required including curbing, driveways, signs, lampposts, mailboxes, utility poles, fences, jersey barriers, etc. disturbed by the Contractor's operations; protection and crossing of existing structures and utilities; decking; safeguarding

open excavations; care and protection of property; water for construction purposes; removal and disposal of excess materials; maintenance of flow in existing drains; dust control and all else incidental thereto, for which separate payment is not provided under other items in the Bid Form.

2. Payment will be made for pipe only when it is installed in the ground and no so-called proportional payment shall be made for pipe on the site but not yet installed.

3. Payment for connections to new RC drain pipe will be made for the quantity as determined above at the unit price bid for Item 1j in the Bid Form. This price and payment shall be full compensation for furnishing and installing the wye-saddle if used, cutting and/or coring the drain pipe, concrete encasement and all else incidental thereto for which separate payment is not provided under other items.

4. Payment for removal and disposal of existing reinforced concrete sub-base when encountered will be made for the respective quantity as determined above at the unit bid price under Item 1k in the Bid Form. The price and payment shall be full compensation for saw cutting the existing reinforced concrete sub-base (thickness as noted on the Drawings), removal and disposal off site of the existing concrete sub-base and all incidental work for which separate payment is not provided under other items in the Bid Form.

5. Payment for removal of existing cobblestones and delivery to the City of New Bedford when encountered will be made for the respective quantity as determined above at the unit bid price under Item 1l in the Bid Form. The price and payment shall be full compensation for removal of the existing cobblestones and delivery to the City of New Bedford Department of Public Infrastructure yard on Shawmut Avenue and become property of the City and all else incidental work for which separate payment is not provided under other items in the Bid Form.

9. Whenever encountered, removal and disposal or delivery of reinforced concrete sub-base and cobblestones from any utility trenches and roadway reconstruction, payment shall be under Items 1k and 1l. Removal and disposal of reinforced concrete sub-base and the removal of cobblestones shall not be considered rock removal and no measurement or payment shall be made under Items 8a or 8b. Removal and disposal of concrete structures shall be paid for under the appropriate item in the Bid Form and shall not be paid for under Items 8a or 8b.

1.02 SEWER PIPE AND APPURTENANCES (Items 2a thru 2m)

A. Measurement

1. Sewer pipe of the type and size specified on the Bid Form (Items 2a thru 2g) will be measured in place on a linear foot basis. Measurement for payment does not signify that the sewer line is accepted.

2. Measurement of sewer pipe for length will be along the horizontal centerline of the pipe with no deduction for manholes and fittings. Measurement will be to the center of manholes

and to the inside face of the wall at sewer structures. Measurement for length will be to the nearest tenth of a foot.

3. Wye branches, wye saddles, "InsertaTee" for FRP sewer pipe, or DI tees for sewer service connections to new sewer pipe (Item 2h) will be measured on each basis for the number actually installed and accepted by the Engineer.

4. Service connections (Item 2i) will be measured in place on a linear foot basis along the horizontal centerline of the pipe from either the face of the wye-branch or tee or from the centerline of the chimney to the end of the pipe as laid. Measurement for payment does not signify that the sewer line is accepted.

5. Ductile iron chimneys (Item 2j) will be measured in vertical feet from the centerline of the sewer to the centerline of the service bell, as shown on the Drawings, but shall not be less than 3-ft for each chimney.

6. Sewer drop manhole connections (Items 2k and 2l) will be measured in vertical feet from the upper invert of the drop to the lower invert of the drop, as shown on the Drawings, but will not be less than 3-feet for each drop connection.

7. PVC sewer pipe bends (Item 2m) of the type and size shown on the Drawings, will be measured on an each basis for the number actually installed and accepted by the Engineer.

B. Payment

1. Payment for furnishing and installing sewer pipe of the size and class specified will be made for the respective quantities as determined above at the unit price bid under Items 2a thru 2g in the Bid Form. This price and payment shall be full compensation for cutting and removing existing pavement sidewalks and curbing; cutting, removal and disposal of, or abandoning, existing sewer pipe to be replaced; removal and disposal of existing manholes to be replaced; removal and disposal of existing concrete structures to be removed; abandoning in-place existing manholes as shown on the Drawings; removing and delivering existing manhole frame and cover to the New Bedford DPI for manholes to be replaced or abandoned; coring existing manholes where required to install new pipe; site preparation; trench excavation (excluding rock and boulder excavation); backfilling and compaction; impervious dams; restoring the trench surface to grade; furnishing and installing geotextile fabric (if required); screened gravel pipe bedding; select common fill and common fill material; CLSM; furnishing, laying, jointing, cleaning and testing the new pipe; sedimentation and erosion control; driving and removing sheeting and bracing; removal and disposal of existing sheeting left in place from previous utility construction work; all restoration and/or replacement required including curbing, driveways, signs, lampposts, mailboxes, utility poles, etc. disturbed by the Contractor's operations to their original condition; protection and crossing of existing structures and utilities; decking; safeguarding open excavations; care and protection of property; water for construction purposes; removal and disposal of excess materials; maintenance of flow in existing sewers; dust control, and all else incidental thereto, for which separate payment is not provided under other items in the Bid Form.

2. Payment will be made for pipe only when it is installed in the ground and no so-called proportional payment shall be made for pipe on the site but not yet installed.

3. Payment for furnishing and installing wye-branches, wye-saddles, "InsertaTee" for FRP sewer pipe, or DI tees or wye branches (all sizes) on the new sewer will be made for the quantity as determined above at the unit price bid for Item 2h in the Bid Form. This price and payment shall be full compensation for the additional cost over and above that of sewer pipe for furnishing and installing the wye-branch, wye-saddle, "InsertaTee" for FRP sewer pipe or DI tee, fittings, plugs or caps, cutting and/or coring the sewer pipe if necessary; screened gravel bedding; furnishing and installing geotextile fabric (if required), and all else incidental thereto for which separate payment is not provided under other items.

4. Payment for furnishing and installing new sewer service connections will be made for the quantity as determined above at the unit price under Item 2i in the Bid Form. This price and payment shall be full compensation for site preparation; cutting and removing any additional existing pavement curbing and sidewalks; trench excavation (excluding rock and boulder excavation); cutting, removal and disposal of existing sewer service pipe; furnishing, laying, jointing, cleaning, and testing of the new PVC or DI service pipe; when installing a new service to an existing pipe furnish and install mainline PVC pipe of the diameter required and flexible pipe couplings; pipe adapters and fittings; flexible pipe repair couplings; backfilling and compaction; CLSM; screened gravel bedding; concrete encasement; protection of existing foundations; maintenance of flow; restoring the trench surface to grade; all restoration and/or replacement required including curbing, driveways, signs, lampposts, mailboxes, utility poles, etc. disturbed by the Contractor's operations to their original condition ; connections and modifications to existing service connection; furnishing, installing and removing sheeting and bracing; safeguarding open excavations; care and protection of property; water for construction purposes; removal and disposal of excess materials; sedimentation and erosion control; protection and crossing of existing structures and utilities; dust control, and all else incidental for which separate payment is not provided under other items in the Bid Form.

5. Payment for furnishing and installing DI chimneys will be made for the quantity in vertical feet as above determined at the price per vertical foot bid for Item 2j in the Bid Form. This price and payment shall be full compensation for furnishing and installing the pipe, fittings, sonatube and stone; end stopper; PVC/DI adapters; concrete encasement, and all else incidental thereto for which separate payment is not provided under other items in the Bid Form.

6. Payment for furnishing and installing internal sewer drop manhole connections (of the size shown on the Drawings) (Items 2k and 2l) will be made for the quantity in vertical feet as above determined at the price per vertical foot bid in the Bid Form. This price and payment shall be full compensation for furnishing and installing internal drop manhole connections, including the drop pipe, fittings, removable plug, anchors, cutting into manhole wall and all else incidental thereto for which separate payment is not provided under other items in the Bid Form.

7. Payment for furnishing and installing PVC bends will be made for the quantity as determined above at the unit price bid for Item 2m in the Bid Form. Price and payment shall

be full compensation for all excavation (except rock and boulder); furnishing, installing and removing sheeting and bracing; backfilling and compaction; furnishing and installing fittings, glands, bolts, nuts, gaskets, joining and all work required for, or incidental to the satisfactory completion of the Item for which payment is not provided under other Items in the Bid Form.

8. Whenever encountered, removal and disposal or delivery of reinforced concrete sub-base and cobblestones from any utility trenches and roadway reconstruction, payment shall be under Items 1k and 1l. Removal and disposal of reinforced concrete sub-base and the removal of cobblestones shall not be considered rock removal and no measurement or payment shall be made under Items 8a or 8b. Removal and disposal of concrete structures shall be paid for under the appropriate item in the Bid Form and shall not be paid for under Items 8a or 8b.

1.03 DUCTILE IRON WATER MAIN AND FITTINGS (Items 3a thru 3n)

A. Measurement

1. Ductile iron water main of the size and class specified on the Bid Form and in the Specifications (Items 3a thru 3f) will be measured in place on a linear foot basis. Measurement for payment does not signify that the water main is accepted.

2. Measurement for length will be along the horizontal centerline of the pipe, with no deduction for valves or fittings. Measurement will be to the nearest tenth of a foot.

3. Hydrants (Item 3g), butterfly valves and boxes with position indicators and covers (Item 3h), and gate valves and boxes with covers (Items 3i thru 3k)shall be measured as the number of each at sizes actually installed in the completed project and accepted by the Engineer.

4. Cast or ductile iron fittings (tees, bends, crosses, reducers, solid sleeves, couplings, etc.) installed in the completed project (Item 3l), all sizes, shall be measured by the pound, excluding cement lining, based on tabulated weights obtained from the current ANSI Specifications. The weight of the fittings shall not include the weight of glands, bolts, nuts, gaskets or accessories.

5. New water service connections (all sizes) (Item 3m) shall be measured in place on a linear foot basis from the centerline of the water main to the property line as detailed on the Drawings.

6. Tapping sleeves and valves (Item 3n) shall be measured as the number of each at sizes and types installed in the completed project and accepted by the Engineer.

B. Payment

1. Payment for furnishing and installing ductile iron pipe of the class and size specified will be made for the respective quantities as determined above at the applicable price per linear foot bid under Items 3a thru 3f in the Bid Form. Such price and payment shall be full compensation for site preparation; cutting and removal of existing pavement, sidewalk and

curbing; trench excavation (excluding rock and boulder excavation); installing and removing sheeting and bracing; removal and disposal of existing sheeting left in place from previous utility construction work; isolating the water main; cutting the main; removal and disposal of excess excavated material; furnishing, laying and jointing the pipe, including specified restrained joints for pipes and fittings; thrust blocks; furnishing and installing polyethylene encasement where required; backfilling and compaction; furnishing and installing any geotextile filter fabric (if required), furnishing select common fill and screened gravel bedding; cleaning, chlorinating and testing the pipe; restoring the trench surface to grade; all restoration and/or replacement required including curbing, driveways, signs, lampposts, mailboxes, utility poles, etc. disturbed by the Contractor's operations to their original condition; furnishing temporary water service including piping, temporary connections to users and temporary hydrants, plugs, removing and disposing of existing water mains and fittings where required; removing gate valve boxes and covers to be replaced and delivering them to the City of New Bedford Water Department; protection and crossing of existing structures and utilities; connections to the existing system; sedimentation and erosion control; water for construction purposes; dust control, and all else incidental thereto for which separate payment is not provided under other items in the Bid Form.

2. Payment for furnishing and installing hydrants (Item 3g) will be full compensation for site preparation; cutting and removing existing pavement, sidewalks, and curbing; excavation (excluding rock and boulder); placing screened gravel where required; providing screened gravel drainage pocket; tie rods; thrust blocks; furnishing and installing restrained joints and fittings; furnishing and installing polyethylene encasement where required; installation of the main line tee with anchorage; gate valve with box and cover; new pipe; connections; hydrants; common fill and select common fill; backfilling and compaction; hydrant extensions; cleaning, chlorinating and testing including hydrant branches; removing existing gate valves, boxes and hydrants to be abandoned and delivering them to the City of New Bedford Water Department; restoring trench surface to grade; all restoration and/or replacement required including curbing, driveways, signs, lampposts, mailboxes, utility poles, etc. disturbed by the Contractor's operations to their original condition; setting and adjustment of valve boxes and covers for gate valve; painting hydrants as specified; water for construction purposes; protection and crossing of existing structures and utilities; removal and disposal of excess material; protection of property; sedimentation and erosion control; safeguarding open excavations; and all work required for or incidental of the satisfactory completion of the Items for which separate payment is not provided under other items in the Bid Form.

3. Payment for furnishing and installing butterfly valves with position indicators and boxes with covers (Item 3h) and gate valves with boxes and covers (Items 3i thru 3k) complete and in place will be made for the quantity as above determined at the unit price in the Bid Form. Price and payment shall be full compensation for site preparation; cutting and removing existing pavement, sidewalks, and curbing; excavation (excluding rock and boulder); placing screened gravel where required; furnishing and installing gate valves and boxes with covers of the type and size specified and butterfly valves with position indicators, boxes and covers of the type and size specified; setting and adjustment of valve boxes and covers for gate valves and butterfly valves with boxes and covers; 1-in corporation stops, fittings, DI pipe for by-pass piping, DI mainline pipe, valve with gate and cover for by-pass piping, thrust blocks for butterfly valve construction as detailed on the Drawings; jointing,

furnishing and installing restrained joints and fittings; furnishing and installing two manual air release valves with valve boxes and covers at each butterfly valve location; common fill; select common fill; CLSM; furnishing and installing polyethylene encasement where shown on the Drawings; backfilling and compaction; testing, cleaning and chlorinating as specified; water for construction purposes; valve testing and acceptance; dust control; sedimentation and erosion control; protection and crossing of existing structures and utilities; all restoration and/or replacement required including curbing, driveways, signs, lampposts, mailboxes, utility poles, etc. disturbed by the Contractor's operations to their original condition; removal and disposal of excess material; safe guarding open excavations; protection of property, and all other work required for or incidental to the satisfactory completion of the Items for which separate payment is not provided under other Items in the Bid Form.

4. Payment for furnishing and installing fittings shall be for the weight as measured above at the unit price indicated on the Bid Form under Item 3l. Price and payment shall be full compensation for furnishing and installing fittings with cement lining, glands, bolt, nuts gaskets, joining and all work required for, or incidental to the satisfactory completion of the Item for which payment is not provided under other items in the Bid Form.

5. Payment for furnishing and installing new water service connections (all sizes) will be made for the respective quantity as determined above at the unit price bid under Item 3m in the Bid Form. This price and payment shall be full compensation for site preparation, cutting and removing existing pavement, curbing and sidewalk; trench excavation (excluding rock and boulder excavation); removal and disposal of existing water service pipe; furnishing, laying, jointing, cleaning, chlorinating and testing of new copper service; pipe adapters and fittings; corporation stops; curb stops with boxes; setting boxes; tapping of the main; backfilling and compaction; screened gravel or select common fill bedding; restoring the trench surface to grade; all restoration and/or replacement required including curbing, driveways, signs, lampposts, mailboxes, utility poles, etc. disturbed by the Contractor's operations to their original condition; connections and modifications to the existing system; furnishing, installing and removing sheeting and bracing; safeguarding open excavations; care and protection of private property; water for construction purposes; maintenance of flow; removal and disposal of excess material; sedimentation and erosion control; protection and crossing of existing structures and utilities; dust control, and all else incidental thereto for which separate payment is not provided under other items in the Bid Form.

6. Payment for furnishing and installing tapping sleeves and valves of the type and size specified will be made for the respective quantity as determined above at the unit price under Item 3n in the Bid Form. Price and payment shall be full compensation for furnishing tapping sleeve and tapping valve of the type specified or required to complete the tap; tapping existing pipe; setting, jointing, tie rods, furnishing and installing restrained joints and fittings; adjusting boxes; cleaning; chlorinating; protection and crossing of existing structures and utilities, and all work required for or incidental to the satisfactory completion of the Items for which separate payment is not provided under other items in the Bid Form.

7. Whenever encountered, removal and disposal or delivery of reinforced concrete sub-base and cobblestones from any utility trenches and roadway reconstruction, payment shall be under Items 1k and 1l. Removal and disposal of reinforced concrete sub-base and the removal of cobblestones shall not be considered rock removal and no measurement or

payment shall be made under Items 8a or 8b. Removal and disposal of concrete structures shall be paid for under the appropriate item in the Bid Form and shall not be paid for under Items 8a or 8b.

1.04 PRECAST CONCRETE DRAIN AND SEWER MANHOLES AND CATCH BASINS (Items 4a thru 4l)

A. Measurement

1. Precast concrete drain manholes and appurtenances (Items 4a thru 4e) will be measured as follows:

   a. Manhole Type "A" (Item 4a) – in vertical feet from the top of the precast cylinder pipe tee outlet or concrete encasement to the top of the manhole frame.

   b. Manhole Types "C", "D", "E", "F" and MassDOT style manhole (drain) (Items 4b thru 4e) – in vertical feet from the invert of the lowest pipe in the manhole to the top of the manhole frame.

2. Precast cylinder tees or field fabricated mitered precast concrete bends for Type "A" manhole bases of the size specified in the Bid Form (Item 4f) will be measured on an each basis for the number installed and accepted by the Engineer.

3. Precast concrete sewer manholes and appurtenances (Items 4g thru 4i) will be measured as follows:

   a. Manhole Types "D", "E", and "F" (sewer) (Items 4g thru 4i) – in vertical feet from the invert of the lowest pipe in the manhole to the top of the manhole frame.

4. Catch basins (Item 4j), will be measured in vertical feet from 4 feet below the invert of the outlet pipe to the top of the catch basin grate (for catch basins installed in streets) or to the top of the catch basin manhole rim (for catch basins installed in sidewalks).

5. Concrete block gutter inlets (Item 4k) shall be measured as the number of each actually installed in the completed project and accepted by the Engineer.

6. Conversion of existing Bradley Head catch basins to standard drain manholes (Item 4l) shall be measured as the number of each actually installed in the completed project and accepted by the Engineer.

B. Payment

1. Payment for furnishing and installing concrete drain manholes and precast cylinder tees or field fabricated mitered precast concrete bends complete in place will be made for the quantity as above determined at the unit price bid for Items 4a thru 4f in the Bid Form, which price and payment shall be full compensation for all site preparation; excavation (excluding rock and boulder); furnishing, installing and removing sheeting and bracing; backfilling and compaction; for furnishing and installing precast sections and bases; for furnishing and

installing precast cylinder tees or field fabricated mitered precast concrete bends and fittings; furnishing and installing cast in-place bases where shown on the Drawings or as directed by the Engineer; removal and disposal of existing drain pipe when constructing on existing drain; removal and disposal of existing manholes; manhole rungs; frames and covers; screened gravel subbase; geotextile filter fabric (where required); all forms, reinforcing, concrete and masonry materials; brick channels and shelves where shown on the Drawing or specified; top slabs for shallow manholes if used; reconstruction of existing brick channels and shelves; flexible pipe repair couplings; water for construction purposes; maintenance of flow; removal and disposal of excess material; sedimentation and erosion control; protection and crossing of existing structures and utilities; safeguarding open excavations; dust control, and all else incidental there to, for which payment is not provided under other items in the Bid Form.

2. Payment for precast concrete sewer manholes will be made for the quantity as above determined at the unit price bid for Items 4g thru 4i in the Bid Form, which price and payment shall be full compensation for all excavation (excluding rock and boulder), removal and disposal of existing sewer pipe when constructing on existing sewer; removal and disposal of existing manholes; abandoning in place existing manholes as shown on the Drawings; furnishing, installing, and removing sheeting and bracing; furnishing and installing screened gravel subbase; geotextile filter fabric (where required); precast sections and bases; cast in-place bases where shown on the Drawings or as directed by the Engineer; top slabs for shallow manholes; brick channels and shelves; flexible pipe repair couplings; manhole rungs; frames and covers; backfilling and compaction; including all forms, reinforcing, concrete masonry materials; reconstruction of existing brick channels and shelves; water for construction purposes; maintenance of flow; removal and disposal of excess material; sedimentation and erosion control; protection and crossing of existing structures and utilities; safeguarding open excavations; dust control, and all else incidental thereto, for which payment is not provided under other items in the Bid Form.

3. Payment for furnishing and installing catch basins (installed within the street and within the sidewalk), complete in place will be made for the quantity as above determined at the price per vertical foot bid for Item 4j, which price and payment shall be full compensation for all site preparation; excavation (excluding rock and boulder excavation), cutting and removing existing pavement, sidewalk and curbing; common fill; select common fill; backfilling and compaction; for furnishing and installing precast concrete base and riser sections for catch basins installed within the street; catch basin hoods as specified; for furnishing and installing bricks and masonry; reinforced concrete cast-in-place concrete base and riser sections for catch basins installed within the sidewalks; frame, cover and grate; 5-ft x 5-ft precast concrete top slab for catch basins installed in sidewalks; saw cutting or coring outlet pipe hole based on field invert requirement; granite curb inlet; wash stone; removal and disposal of existing catch basins when installing new catch basin in the same location; 100 square feet of 2-in HMA binder course for sidewalk repairs; screened gravel subbase; geotextile filter fabric (where required); all forms, reinforcing, concrete and masonry materials; brick; water for construction purposes; maintenance of flow; removal and disposal of excess material; all restoration and/or replacement required including curbing, driveways, signs, lampposts, mailboxes, utility poles, etc. disturbed by the Contractor's operations to their original condition; sedimentation and erosion control; protection and crossing of existing structures and utilities; safeguarding open excavations; protection of property; dust control, and all else

incidental thereto for construction of catch basins (in the street and sidewalk) as detailed on the Drawings and specified herein for which separate payment is not provided under other items in the Bid Form.

4. Payment for furnishing and installing concrete block gutter inlets, complete in place will be made for the quantity as above determined at the unit price bid for Item 4k, which price and payment shall be full compensation for all site preparation; excavation (excluding rock and boulder excavation); cutting and removing existing pavement, sidewalk and curbing; common fill; select common fill; backfilling and compaction; furnishing and installing precast concrete blocks or precast concrete gutter inlet MassDOT standard style; bricks and masonry; furnishing and installing cast-in-place concrete base; screened gravel base; geotextile filter fabric (where required); frame, cover and grate; granite curb inlet; removal and disposal of existing catch basins when installing new gutter inlet in the same location; all forms, reinforcing, concrete and masonry materials; furnishing, forming and shaping concrete inverts; water for construction purposes; maintenance of flow; removal and disposal of excess material; all restoration and/or replacement required including curbing, driveways, signs, lampposts, mailboxes, utility poles, etc. disturbed by the Contractor's operations to their original condition; sedimentation and erosion control; protection and crossing of existing structures and utilities; safeguarding open excavations; protection of property; dust control, and all else incidental thereto for construction of concrete block gutter inlets as detailed on the Drawings and specified herein for which separate payment is not provided under other items in the Bid Form.

5. Payment for converting existing Bradley Head catch basins into standard drain manholes, complete in place will be made for the quantity as above determined at the unit price bid for Item 4l, which price and payment shall be full compensation for site preparation; all excavation (excluding rock and boulder excavation); cutting and removing existing pavement, sidewalk, curbing, and Bradley Head flat top slab, concrete wash stone and precast concrete or concrete block cone section of existing catch basin; furnishing and installing new granite curbing (10-ft of 6-in Type VB); backfilling and compaction; furnishing and installing new concrete manhole flat top slab on existing catch basin; bricks and masonry; frames and covers; all forms reinforcing, concrete and masonry materials; repairs to existing catch basins; delivering the frame and cover from the existing catch basin to DPI; common fill; select common fill; screened gravel; water for construction purposes; maintenance of flow; removal and disposal of excess material; all restoration and/or replacement required including curbing, driveways, signs, lampposts, mailboxes, utility poles, etc. disturbed by the Contractor's operations to their original condition; sedimentation and erosion control; protection and crossing of existing structures and utilities; safeguarding open excavations; protection of property; dust control, and all else incidental thereto for required to convert existing Bradley Head catch basins into standard drain manholes as detailed on the Drawings and specified herein for which separate payment is not provided under other Items in the Bid Form.

6. When a MassDOT style manhole is called for, payment for the MassDOT style manhole shall be included under the Item in the Bid Form corresponding to the particular manhole diameter.

9. Whenever encountered, removal and disposal or delivery of reinforced concrete sub-base and cobblestones from any utility trenches and roadway reconstruction, payment shall be under Items 1k and 1l. Removal and disposal of reinforced concrete sub-base and the removal of cobblestones shall not be considered rock removal and no measurement or payment shall be made under Items 8a or 8b. Removal and disposal of concrete structures shall be paid for under the appropriate item in the Bid Form and shall not be paid for under Items 8a or 8b.

1.05 REPLACEMENT OF EXISTING LEAD WATER SERVICE CONNECTIONS (Item 5)

A. Measurement

1. Replacement of existing lead water service connections (all sizes) (Item 5) in streets and sidewalk areas will be measured in linear feet for the actual number of linear feet of all sizes of tubing installed in the completed project as measured from the corporation stop to the end of the new service line installed.

B. Payment

1. Payment for furnishing and installing copper tubing service connections of the required size will be made for the respective quantities as determined above at the applicable price under Item 5 of the Bid Form. Price and payment shall be full compensation for site preparation; cutting and removing existing pavement, sidewalks and curbing; all work of furnishing and installing the tubing of the size required, new curb stop with box, and all required adapters, reducers, fittings and appurtenances required for executing such connections; common fill; select common fill; chlorinating; trench excavation (excluding rock and boulder excavation); removal and disposal of existing lead service connection; driving and removing sheeting and bracing; screened gravel; backfilling and compaction; restoring the trench surface to grade; all restoration and/or replacement required including curbing, driveways, signs, lampposts, mailboxes, utility poles, etc. disturbed by the Contractor's operations to their original condition ; removal and disposal of excavated materials; sedimentation and erosion control; protection and crossing of existing structures and utilities; safeguarding open excavations; protection of property; dust control, and all work required for or incidental to the satisfactory completion of the Items for which payment is not provided under other items in the Bid Form.

1.06 UTILITY RELOCATION COORDINATION (Item 6)

A. Measurement

1. Utility (other than sewer, drain and water) relocations are the responsibility of the utility company. Coordination with utility companies (Item 6) will be measured on a lump sum basis.

B. Payment

1. Gas main relocations shall be performed by NStar Gas. Electrical relocation and utility pole relocation shall be performed by NStar Electric. Relocation of electric street light poles and

electric ducts servicing the lights will be coordinated with the City of New Bedford. Telephone duct and utility pole relocations shall be performed by Verizon. Cable TV relocations shown on the Drawings shall be performed by Comcast Cable. Payment of the lump sum price bid for Item 6 shall be full compensation for coordinating work and attending weekly meetings with the NStar Gas, NStar Electric, Verizon, Comcast Cable, and the City of New Bedford.

1.07 FILL MATERIALS (Items 7a thru 7c)

A. Measurement

1. Bank-run gravel/gravel borrow (Item 7a), when its use is approved and when furnished, placed and compacted for pavement subbase over trenches and for miscellaneous uses will be measured in cubic yards at actual in-place dimensions as determined by the Engineer. When used for pavement subbase the widths for payment shall not exceed those defined for trench width pavement. No allowance will be made for loss from consolidation of material. Truck measurement will not be permitted.

2. Screened gravel (Item 7b) used in conjunction with utility crossings and at other locations when its use is ordered by the Engineer will be measured in cubic yards at actual in-place dimensions as determined by the Engineer. When used in trenches the payment limits shall not exceed the trench widths defined for rock.

3. Controlled low-strength material (CLSM) (Item 7c), used in conjunction with utility crossings, MassHighway trench backfill requirements and at other locations when its use is ordered by the Engineer will be measured in cubic yards at actual in-place dimensions as determined by the Engineer. When used in trenches the payment limits shall not exceed the trench widths defined for rock.

B. Payment

1. Payment for furnishing and placing bank-run gravel/gravel borrow, screened gravel, and CLSM will be made for the quantity determined above at the respective unit price bid for Items 7a thru 7c in the Bid Form. This price and payment shall be full compensation for furnishing, hauling, placing, compacting and all else incidental thereto for which separate payment is not provided under other items.

2. Payment for gravel borrow refill material to replace unsuitable material below normal grade will be included under Item 9.

3. Payment for screened gravel used in pipe bedding and encasement will be included with the respective pipe items.

4. Payment for screened gravel used in subbase for manholes, catch basins, or gutter inlets will be included under the respective items.

5. Payment for gravel and controlled low-strength material (CLSM) used in subgrade for sewer crossings, drain crossings and precast concrete structures will be included under Items 12a thru 12g.

6. Payment for gravel refill materials to refill rock and boulder excavation will be included under Items 8a and 8b.

1.08 ROCK AND BOULDER EXCAVATION AND REFILL (Items 8a and 8b)

A. Measurement

1. When rock is encountered, the material shall be uncovered and the Engineer notified. The Engineer will then take cross sections of the rock surface. If the Contractor fails to uncover the ledge, notify the Engineer, and allow ample time for cross sectioning the undisturbed material, the Contractor shall have no right-of-claim to any classification other than that allowed by the Engineer. Removal of old concrete foundations, if any, shall be classified as rock unless otherwise paid for under other items in the Bid Form.

2. Measurement of rock excavation in pipe trenches will extend to the width as specified in the DEP/BMF Construction Grant Policy Memorandum No. CG-14 appended to the Supplementary Conditions. The limits are as follows:

Depth from Ground Surface to Invert of Pipe	Pay Width (Nominal Pipe Diameter) 0 to 24-in	over 24-in
0 to 12-ft	5-ft-0-in	D + 3-ft-0-in
12-ft to 20-ft	7-ft-0-in	D + 5-ft-0-in
20-ft to 24-ft	8-ft-0-in	D + 5-ft-0-in

Measured widths for depths over 24-ft shall be determined case by case consistent with the foregoing chart.

a. Payment depth for rock which is encountered in a trench shall be no less than three feet when removal can be accomplished only by use of jack (air or hydraulic) hammers or chemical splitting.

b. Payment for rock removed using the same or equal equipment as utilized for normal trench excavation shall be limited to the actual depth removed within the limits established by the contract documents.

3. Measurement for depth shall be from the top of the rock formation to the normal depth of the pipe as shown on the Drawings.

4. The pay limit for rock and boulder removal for manholes and structures shall commence one foot outside the widest dimension of the structure or shall be the maximum connecting trench width, whichever is greater. No allowance will be made for overbreakage.

5. Boulders and concrete structures exceeding 1 cu. yd. in volume when encountered in excavation will be measured for payment. Removal of boulders of whatever size will not be paid for when encountered in borrow areas.

6. The quantity of rock and boulder excavation to be paid for shall be the number of cubic yards of rock or boulders measured in place within the limits herein specified.

B. Payment

1. Payment for rock and boulder excavation will be made for the quantities as determined above at the established unit price for Item 8a in the Bid Form. This price and payment shall be full compensation for excavation, removal and disposal of rock and boulder, backfilling and providing borrow for any deficiency of trench backfill and all work incidental thereto, for which payment is not provided under other items.

2. Payment for rock and boulder excavation will also be made for the quantities as determined above at the unit price bid for Item 8b in the Bid Form. This price and payment shall be full compensation for any additional costs associated with rock and boulder excavation over and above the unit price established for Item 8a.

3. No payment will be made under Items 7a thru 7c for refill material to replace any deficiency of backfill material.

4. Whenever encountered, removal and disposal or delivery of reinforced concrete sub-base and cobblestones from any utility trenches and roadway reconstruction, payment shall be under Items 1k and 1l. Removal and disposal of reinforced concrete sub-base and the removal of cobblestones shall not be considered rock removal and no measurement or payment shall be made under Items 8a or 8b. Removal and disposal of concrete structures shall be paid for under the appropriate item in the Bid Form and shall not be paid for under Items 8a or 8b.

1.09 EARTH EXCAVATION AND REFILL BELOW NORMAL GRADE (Item 9)

A. Measurement

1. Measurement of earth excavation and refill below normal grade will extend downward from the dimensions defining normal grade on the Drawings to a depth determined by the Engineer and for widths as defined above for rock excavation or as approved by the Engineer. Normal grade is defined as the bottom of the pipe trench.

2. If the trench bottom is below normal grade through error of the Contractor or if improper drainage softens the subgrade and additional excavation in the trench is required before laying the pipe, such removal and replacement of material will not be measured for payment.

3. No allowance will be made for shrinkage or compaction of gravel in place. Measurement by truck count will not be permitted.

4. Furnishing and placing screened gravel in accordance with the Specifications to replace excavation below normal grade is included in this work and will not be measured for payment under Item 7b.

B. Payment

1. Payment for earth excavation and refill below normal grade will be made for the quantity as determined above at the price per cubic yard bid for Item 9 in the Bid Form, which price and payment shall be full compensation for excavation and disposal of all materials below normal grade, furnishing, placing and compacting screened gravel and all other work incidental thereto.

1.10 PAVEMENT REPLACEMENT (Items 10a-1 thru 10d)

A. Measurement

1. Initial trench width pavement placed over trenches, Hot Mix Asphalt (HMA) binder course (Item 10a-1 and 10a-2), will be measured in square yards, as actually placed, but not exceeding the limits given below:

Depth from Ground Surface to Invert of Pipe (ft)	Temporary Pavement Width (ft) (Nominal Pipe Diameter) 0 to 24-in	over 24-in
0-8	6.5	D + 4-ft-0-in
8-12	9.5	D + 7-ft-0-in
12-16	12.5	D + 10-ft-0-in
16-20	15.5	D + 13-ft-0-in
over 20	18.5	D + 16-ft-0-in

a. D above shall be the nominal inside diameter of pipe

2. Permanent full width pavement, Hot Mix Asphalt (HMA) surface course (Item 10b), will be measured in square yards, as actually placed, within the limits of the existing pavement as shown on the Drawings and to the extent ordered by the Engineer.

3. Measurement for permanent full width overlay pavement, HMA surface course (Item 10c), will be in square yards as actually placed, to the limits of the existing pavement, to the extent shown on the Drawings, or as ordered by the Engineer.

4. Measurement for permanent trench-width pavement in State Highway, including 4-in HMA base and 3-in HMA top (Item 10d), will be in square yards as actually placed to a maximum trench width of 5-ft. Measurement shall be horizontally centered along the center of the pipe. Controlled density fill is included under Item 7c. Infra-red shall be included where required by the Massachusetts Highway Department (MHD) or by Engineer.

B Payment

1. Payment for 4-in thick HMA binder course initial trench-width pavement in City Streets (Item 10a-1) and 2-in thick HMA binder course initial trench-width pavement in sidewalks (Item 10a-2), complete in place and approved by the Engineer, will be made for the quantity determined above at the price bid for Items 10a-1 and 10a-2 respectively in the Bid Form. This price and payment shall be full compensation for cleaning, trimming, and priming the edges of the existing pavement; cleaning and preparing and compacting subgrade and the surface of the gravel base; furnishing, placing and maintaining the initial pavement, including labor, materials, equipment; raising catch basins and manhole castings and gate boxes to new grade including concrete collars within streets excluding Mitchell Street, Sawyer Street, and Jean Street; calcium chloride for dust control; installation of pavement markings; water for construction purposes; removal and disposal of excess material, and all else incidental thereto for which payment is not provided under other items in the Bid Form.

2. Payment for permanent full-width pavement in City Streets will be made for the quantity as above determined, at the price per square yard bid for Items 10b in the Bid Form, which price and payment shall be full compensation for removal and disposal of initial trench pavement; sawcutting 1.0-ft on both sides of trench; removing, reshaping and compacting gravel subbase below existing pavement; resetting all castings; cleaning and priming the edges of existing pavement; furnishing, placing and compacting bituminous concrete courses and maintaining pavement for three years; installation of pavement markings; hot poured rubberized asphalt sealer; calcium chloride for dust control; removal and disposal of excess materials; water for construction purposes; performing all finishing work and all else incidental thereto.

3. Payment for permanent full width overlay pavement as specified for areas of mill and overlay (1 1/2-in thick in City Streets), HMA surface course, will be made for the quantity as above determined, at the respective prices bid for Item 10c in the Bid Form, which price and payment shall be full compensation for cleaning and preparing the surface of the street; repairing the initial pavement where settlement has occurred; raising catch basins and manhole castings and gate boxes to new grade including concrete collars; milling existing pavement for proper transition from new pavement to existing pavement and grooving existing pavement at curbing, where necessary as determined by the Engineer, to leave proper curbing reveal; installing variable depth leveling course were determined necessary by the Engineer; priming initial and existing pavement with tack coat; furnishing and placing bituminous pavement over the full width of the street; compacting and maintaining the bituminous concrete surface for a period of three years; applying Bitumen Tack Coat; hot poured tar crack rubberized asphalt sealer; water for construction purposes; dust control; installation of pavement markings; performing all finishing work, and all else incidental thereto for which separate payment is not provided under other items in the Bid Form.

4. Payment for trench pavements in State Highway (Item 10d), complete in place and approved by the Engineer, will be made for the quantity determined above at the appropriate unit price bid in the Bid Form. Price and payment shall be full compensation for cleaning and preparing the surface of the base; saw cutting trench 1-ft back on both sides of trench; removal and disposal of initial trench pavement; priming initial and existing pavement with tack coat; hot poured tar crack rubberized asphalt sealer; furnishing, placing, compacting, and maintaining the trench 7-in pavement for a period of three years, including labor, material; infra-red pavement repairs; raising catch basins and manhole castings and gate

boxes to new grade including concrete collars; calcium chloride for dust control; water for construction purposes; performing all finishing work, and all else incidental thereto for which payment is not provided under other items in the Bid Form.

5. Payment under Item 10 shall include all costs of furnishing, storing, and applying calcium chloride as required for dust control.

6. If the thickness of pavement ordered placed by the Engineer is different than that specified, payment will be prorated on the basis of the thickness of material actually ordered placed. No payment will be made for any additional pavement not specifically ordered in writing by the Engineer.

7. Payment for bank-run/gravel borrow (trench subbase) gravel is included in Item 7a. Payment for CLSM backfill in MassHighway right of way shall be under Item 7c.

8. Payment for restoring driveways and curbing within the trench limits, of whatever type encountered, will be made under the pipe items.

1.11 DUCKBILL ELASTOMERIC CHECK VALVES (Item 11)

A. Measurement

1. Measurement for payment for the installation of duckbill elastomeric check valves (Item 11) of the type and size shown shall be measured as the number of each actually installed in the completed project and accepted by the Engineer.

B. Payment

1. Payment for furnishing and installing duckbill elastomeric check valves of the type and size shown will be made for the respective quantity as determined above at the unit price bid under Item 11 in the Bid Form. This price and payment shall be full compensation for furnishing and installing the duck bill elastomeric check valves as specified herein and per manufacture's recommendations and all else incidental thereto for which separate payment is not provided under other items in the Bid Form.

1.12 AREAS OF SPECIAL CONSTRUCTION (Items 12a thru 12g)

A. Measurement

1. Measurement for payment for areas of special construction where shown on the Drawings and listed below shall be on a lump sum basis.

a. Cast-in-Place Structure at the intersection of Sawyer Street and Mitchell Street – Sheet No. 4, STA 0+00 (Item 12a)
b. Coggeshall Street at Belleville Avenue – Sheet No. 6, STA 9+84 to STA 10+59 (Item 12b)
c. Coggeshall Street at Mitchell Street – Sheet No. 6, STA 0+00 to STA 0+40 (Item 12c)

d. Coggeshall Street at No. Front Street, removal of contaminated, abandoned sewer – Sheet No. 7, STA 14+90 (Item 12d)
e. Removal and replacement of existing 48-in PCCP transmission main (Item 12e)
f. Coggeshall Street Precast Structure – Sheet No. 7, STA 14+55 (Item 12f)
g. Sawyer Street at Jean Street drain connection to existing brick drain – Sheet No. 9A (Item 12g)

B. Payment

1. Payment of the lump sum bid for Item 12a in the Bid Form shall fully compensate the Contractor for construction of the Sawyer Street at Mitchell Street Cast-in-Place Structure as shown on Sheet No. 4 and detailed on Sheet No. C-10. This price and payment shall be full compensation for cutting and removing existing pavement; site preparation; removal and disposal of existing 12-in drain pipe; supporting, protecting, cutting and removing section of existing 72-in brick CSO; cleaning, removal and disposal of up to 100-ft of accumulated sediment and liquid within the existing 48-in RC drain; cleaning removal and disposal of accumulated sediment within the 72-in brick CSO; utility relocation; removal and replacement of section with 10-in VC sewer with 10-in concrete encased DI pipe; trench excavation (excluding rock and boulder excavation); backfilling and compaction; furnishing, placing and compacting the subgrade material; installing and removing sheeting and bracing; cutting, support, protection and crossing of existing utilities; bank run gravel/gravel borrow sub-base; restoring the trench surface to grade; furnishing and installing common fill, select common fill, structural fill, and CLSM; removal and disposal of existing sheeting left in place from previous utility work; furnishing and installing cast-in-place concrete structure including all concrete, formwork, reinforcing steel, masonry, manhole rungs, bricks, construction of brick lined channels and shelves, frames and covers; all restoration and/or replacement required including curbing, driveways, signs, lampposts, mailboxes, utility poles, etc. disturbed by the Contractor's operations to their original condition ; decking; safeguarding open excavations; care and protection of private property; water for construction purposes; removal and disposal of excess materials; maintenance of flow; dust control, and all else incidental thereto for which separate payment is not provided under items in the Bid Form to construct the drain/sewer crossing as shown on the Drawings.

2. Payment of the lump sum bid for Item 12b in the Bid Form shall fully compensate the Contractor for construction of the Coggeshall Street at Belleville Avenue Drain Crossing as shown on Sheet No. 6 and detailed on Sheet No. C-7. This price and payment shall be full compensation for cutting and removing existing pavement; site preparation; trench excavation (excluding rock and boulder excavation); backfilling and compaction; installing and removing sheeting and bracing; cutting, support, protection and crossing of existing utilities; furnishing and installing AASHTO H20 wheel loading rated 6-ft x 10-ft precast concrete structures with removable top slabs at Sta. 9+84 and Sta. 10+59; frames and covers; 12-in thick cast-in-place reinforced concrete roadway collar; bank run gravel sub-base/gravel borrow; all forms, reinforcement, concrete and masonry materials; brick channels and shelves; furnishing, installing, cleaning and testing CL 52 DI drain pipe and restrained joint fittings of the size shown; cutting, removing and disposal of existing drain and sewer manholes and pipe to be relocated; abandoning and removing existing 10-in and 12-in water mains; furnishing and installing 10-in and 12-in blind flange with Type 316 stainless steel bolts; restoring the trench surface to grade; furnishing, placing, and

compacting screened gravel pipe bedding, common fill, select common fill, and CLSM; geotextile filter fabric (if required); all restoration and/or replacement required including curbing, driveways, signs, lampposts, mailboxes, utility poles, etc. disturbed by the Contractor's operations to their original condition; decking; safeguarding open excavations; care and protection of private property; water for construction purposes; removal and disposal of excess materials; sedimentation and erosion control; maintenance of flow; dust control, and all else incidental thereto for which separate payment is not provided under items in the Bid Form to construct the drain crossing as shown on the Drawings.

3. Payment of the lump sum bid for Item 12c of the Bid Form shall fully compensate the Contractor for construction of the Coggeshall Street at Mitchell Street inverted drain siphon as shown on Sheet No. 6 and detailed on Sheet No. 11 – Profile "F" (STA 0+00 to STA 0+40) of the Drawings. This price and payment shall be full compensation for cutting and removing existing pavement; site preparation; trench excavation (excluding rock and boulder excavation); backfilling and compaction; installing and removing sheeting and bracing; cutting, support, protection and crossing of existing utilities; furnishing and installing precast sections and bases; manhole rungs; frames and covers; bank run gravel/gravel borrow; screened gravel sub-base; geotextile filter fabric (if required); all forms, reinforcement, concrete and masonry materials; brick channels and shelves; pipe adapters; furnishing, installing, cleaning and testing drain pipe of the type, class and size shown; furnishing and installing restrained joint fittings; cutting, removing and disposal of existing drain and sewer manholes and pipe to be relocated; restoring the trench surface to grade; furnishing and installing screened gravel pipe bedding; common fill, select common fill and CLSM; sedimentation and erosion control; removal and disposal of existing sheeting left in place from previous utility work; all restoration and/or replacement required including curbing, driveways, signs, lampposts, mailboxes, utility poles, etc. disturbed by the Contractor's operations to their original condition; maintenance of flow; decking, safeguarding open excavations, care and protection of private property, water for construction purposes, removal of excess materials, and all else incidental thereto for which separate payment is not provided under items in the Bid Form to construct the drain/sewer crossing as shown on the Drawings.

4. Payment of the lump sum bid for Item 12d of the Bid Form shall fully compensate the Contractor for removal and disposal of approximately 20-ft section of the existing 54-in abandoned, grout filled, containing Polychlorinated Biphenyl (PCB) contaminated grit with concentrations greater than 50 ppm (at thicknesses estimated at two to three feet) segmental block interceptor as shown on Sheet No. 7. This price and payment shall be full compensation for cutting and removing existing pavement, saw cutting; site preparation; trench excavation (excluding rock and boulder excavation); installing and removing sheeting and bracing; supporting, protecting, cutting, and removing existing pipe; removal, transfer and proper disposal of existing pipe and contents including grout, debris, PCB contaminated grit greater than 50 ppm as bulk PCB remediation waste at an approved Toxic Substances Control Act disposal facility in accordance with federal, state and local regulations including 40 CFR 761; bulkheading existing pipe including concrete bulkheads; backfilling and compaction; common fill, select common fill, and CLSM; screened gravel; preparation of pipe surface and epoxy bonding agent; health and safety requirements; required sampling and analyses and all else incidental thereto for which separate payment is not provided under other items in the Bid Form. The pipe and PCB contaminated contents shall all managed and

disposed of as bulk PCB remediation waste greater than 50 ppm based on historical sampling results indicating the grit with as found PCB concentrations ranging from approximately 220 ppm to 270 ppm.

5. Payment of the lump sum bid for Item 12e of the Bid Form shall fully compensate the Contractor for removal and replacement of a section (up to 6 pipe lengths) of the existing 48-in PCCP transmission main as shown on Sheet No. 9. This price and payment shall be full compensation for cutting and removing existing pavement; site preparation; trench excavation (excluding rock and boulder excavation); backfilling and compaction; installing and removing sheeting and bracing; cutting, support, protection and crossing of existing utilities; furnishing bank run gravel/gravel borrow; screened gravel sub-base; geotextile filter fabric (if required); furnishing, installing, cleaning, chlorinating, and testing CL 52 DI pipe and restrained joint fittings of the size shown; furnishing and installing DI to PCCP pipe adaptors; fittings; manway with Type 316 stainless steel bolts and dog house manhole with frame and cover; cutting, removing and delivery to Owner 1 segment of existing PCCP pipe to be replaced; isolating the transmission main; dewatering the main including required dechloramination, handling leakage from valves; coordinating work with other required transmission main work; furnishing temporary water service including piping, temporary connections to users and temporary hydrants; plugs; removing and disposing of existing water mains and fittings where required; restoring the trench surface to grade; furnishing and installing screened gravel pipe bedding; furnishing and installing polyethylene encasement; common fill and select common fill; sedimentation and erosion control; all restoration and/or replacement required including curbing, driveways, signs, lampposts, mailboxes, utility poles etc. disturbed by the Contractor's operations to existing conditions; decking; safeguarding open excavations; care and protection of private property; water for construction purposes; dust control; removal and disposal of excess materials, and all else incidental thereto for which separate payment is not provided under items in the Bid Form to construct the drain/sewer crossing as shown on the Drawings.

6. Payment of the lump sum bid for Item 12f of the Bid Form shall fully compensate the Contractor for construction of the Coggeshall Street Precast Structure as shown on Sheet No. 7 and detailed on the Drawings. This price and payment shall be full compensation for cutting and removing existing pavement; site preparation; trench excavation (excluding rock and boulder excavation); backfilling and compaction; installing and removing sheeting and bracing; cutting, support, protection and crossing of existing utilities; furnishing and installing AASHTO H20 wheel loading rated 6-ft x 10-ft precast concrete structure with removable top slab at STA 14+55; manhole rungs; frames and covers; bank run gravel/gravel borrow; screened gravel sub-base; geotextile filter fabric (if required); all forms, reinforcement, concrete and masonry materials; brick channels and shelves; cutting, removing and disposal of existing drain and sewer manholes and pipe to be relocated; restoring the trench surface to grade; furnishing and installing screened gravel pipe bedding; common fill, select common fill and CLSM; sedimentation and erosion control; removal and disposal of existing sheeting left in place from previous utility work; all restoration and/or replacement required including curbing, driveways, signs, lampposts, mailboxes, utility poles etc. disturbed by the Contractor's operations to existing conditions; decking; safeguarding open excavations; care and protection of private property; water for construction purposes; removal and disposal of excess materials; maintenance of flow; dust

control, and all else incidental thereto for which separate payment is not provided under items in the Bid Form to construct the drain/sewer crossing as shown on the Drawings.

7. Payment for connecting new 18-in Class 52 DI drain to the existing 60-in double course brick conduit in Sawyer Street at Jean Street as detailed on Sheet No. 9A of the Drawings will be made for the lump sum price bid under Item 12g in the Bid Form. This price and payment shall be full compensation for cutting and removing existing pavement; site preparation; trench excavation (excluding rock and boulder excavation); coring, cutting, support and protection of the existing brick conduit; connecting the new drain as shown on the Drawings including all grout and waterstops; backfilling and compaction; furnishing and placing screened gravel; geotextile filter fabric (if required); common fill, select common fill, controlled low-strength material; furnishing and installing approximately 15-ft of Class 52 18-in DI pipe; laying, jointing, cleaning and testing the pipe connection; dust control; removal and disposal of excess material; care and protection of property, and all incidental work, including driving and removing sheeting and bracing, all restoration and/or replacement required within the trench limits, protection and crossing of existing structures and utilities, decking, safeguarding open excavations, removal and disposal of excess materials; restoring the trench surface to grade, and all else incidental thereto, for which separate payment is not provided under other items in the Bid Form.

8. Payment for rock excavation shall be included in Items 8a and 8b, as shall boulder excavated from within the limits of the pipe. Removal of concrete sub-base or cobble stones shall be paid for under Item 1k and 1l in the Bid Form.

9. Pavement shall be measured and paid for in accordance with Item 10 in the Bid Form.

10. All other equipment, work, and material to complete the areas of special construction, including but not limited to protection of existing utilities, sedimentation and erosion control, maintenance of flow, sheeting, shoring and bracing, and acceptance testing shall be included within this Item.

1.13 DEWATERING AND DRAINAGE (Item 13)

A. Measurement

1. Measurement for payment for dewatering and drainage shall be on a lump sum basis.

B. Payment

1. Payment of the lump sum price bid for Item 13 shall be full compensation for all labor, equipment, materials and incidentals necessary to handle ground water and surface water as specified in Section 02140 including but not limited to obtaining all required dewatering and drainage permits and plans, sinking well points, furnishing, installing and maintaining pumping systems including all pumps, piping, casing and other appurtenances, filter sand required for underdrains or pumping systems, erosion and sediment control, furnishing, installing and maintaining observation wells and all else incidental thereto for which separate payment is not provided under other items.

1.14 MISCELLANEOUS CONCRETE (Item 14)

A. Measurement

1. Measurement for payment for concrete furnished and installed shall be the actual number of cubic yards placed or as determined by the Engineer. Concrete shall be measured in place in the completed work by average dimensions in each of three planes. Slip measurement shall not be allowed.

2. Concrete placed for miscellaneous purposes where approved by the Engineer will be measured in cubic yards.

B. Payment

1. Payment for miscellaneous concrete will be made for the quantity as above-determined at the unit price bid in the Bid Form for Item 14 and shall be full compensation for furnishing and placing the concrete including form work, reinforcing and other materials required, complete as shown on the Drawings and as specified herein.

2. Payment for concrete encasement of wyes and chimneys is not included in this item.

1.15 MISCELLANEOUS WORK AND CLEANUP (Item 15)

A. Measurement

1. Miscellaneous work and cleanup shall be measured on a lump sum basis.

B. Payment

1. Payment of the lump sum price bid in the Bid Form for Item 15, Miscellaneous Work and Cleanup, shall be full compensation for furnishing all labor, materials and equipment required to do all related work of this Contract as specified under Section 02901, or as shown on the Drawings and any other miscellaneous work not specifically included for payment under any other item, but obviously necessary to complete the Contract. Partial payments shall be based on the breakdown of the items as specified in Section 02901. Include allowance of $2,000 within the total bid price for Item 15 as specified in Section 02764.

1.16 CONNECTIONS TO AND WORK ON THE EXISTING DRAIN AND SEWER SYSTEMS AND WORK BY OTHERS (Item 16)

A. Measurement

1. Measurement for connections to and work on the existing drain and sewer systems (Item 16) shall be on a lump sum basis.

B. Payment

1. Payment of the lump sum price bid for Item 16 of the Bid Form shall fully compensate the Contractor for furnishing all necessary equipment, labor, and materials to connect existing pipes and structures to the new work; including excavation, backfill and compaction; pipe adapters; cutting into existing manholes and catch basins and connecting new pipe; reshaping manhole inverts; handling existing wastewater and drainage flows including temporary connections, and bypass pumping of drain water and sewage; plugging and abandoning existing pipes (all sizes unless otherwise noted), construction of bulkheads, abandoning or removal and disposal of existing catch basins and manholes, construction of bulk heads on existing drain, sewer and water mains, and all incidental work required to make connections to the existing system as shown on the Drawings and specified in Section 02668.

2. Payment for rock excavation, shall be included in Items 8a and 8b, as shall boulder excavated from within the limits of the pipe.

1.17 TEST PITS (Item 17)

A. Measurement

1. Test pits (Item 17) will be measured in cubic yards in accordance with the following established volume rates:

Test Pit Depth	Cu. Yds per vert. Ft.
0 to 8 ft	1.5
Over 8 ft	2.0

B. Payment

2. Payment for test pits will be made for the quantities as determined herein at the price per cubic yard bid under Item 17 in the Bid Form. This price shall be full compensation for cutting and removing pavement, excavation (including hand excavation), backfill, compaction, restoring trench surface to grade, pavement subbase, temporary pavement and all incidentals required to complete the test pits for which separate payment is not provided under other items in the Bid Form.

1.18 LOAMING AND SEEDING (Item 18)

A. Measurement

1. Loaming and seeding (Item 18), when its use is approved and when furnished and placed, will be measured in cubic yards at actual in-place dimensions as determined by the Engineer. No allowance will be made for loss from consolidation of material. Truck measurement will not be permitted.

B. Payment

1. Payment for furnishing and placing loam and seed will be made for the quantity determined above at the respective unit price bid for Items 18 in the Bid Form. This price and payment shall be full compensation for furnishing, hauling and placing the loam and seed and all else incidental thereto for which separate payment is not provided under other items.

1.19 TRAFFIC MANAGEMENT (Item 19)

A. Measurement

1. Measurement for all work required to coordinate traffic control systems and to comply with the traffic management plans (TMPs) shall be on a lump sum basis.

2. Measurement for all work required to furnish and install specialty construction signs, detour signs and notification signs shall be included in this Item.

3. Measurement for all work required to furnish and install additional electronic message boards for public notification shall be included under this Item.

4. Measurement for all temporary road construction and pavement to facilitate traffic the flow of traffic shall be included under this Item.

B. Payment

1. Payment of the lump sum price bid for traffic management (Item 19) shall be full compensation for all labor, materials, equipment and incidentals required to furnish, install, maintain and remove all temporary traffic management and control devices, including signs, barrels, lights, barriers, boards and electronic message boards, coordination, traffic signal timing adjustments, temporary pavement marking removal and application, as shown on the Drawings and as specified herein, and all else incidental thereto for which separate payment is not provided under other items. Payment shall also include all work and restoration associated with the Grandfield Temporary Access Roadway as specified in Section 02570 and Temporary Access Roadway as specified in Section 02571 including but not limited to site restoration, roadway paving, sidewalk and driveway paving, ramp paving, and curbing repairs.

2. Payment for furnishing and installing specialty construction signs includes full compensation for all labor, materials, equipment and incidentals required to furnish, install, maintain and remove all temporary specialty construction and detour signs where required by the City of New Bedford Department of Public Infrastructure and the Engineer, and all else incidental thereto for which separate payment is not provided under other items. At the completion of the project, all signs shall become property of the City of New Bedford.

3. Payment for furnishing and installing electronic message boards includes full compensation for all labor, materials, equipment and incidentals required to furnish, install, maintain, operate and remove all electronic message boards where required by the City of New Bedford Department of Public Infrastructure and the Engineer, and all else incidental thereto for which separate payment is not provided under other items.

1.20 CONTAMINATED MATERIAL EXCAVATION (Item 20a)

A. Measurement

1. Excavation of contaminated material shall be measured in cubic yards and shall be the actual volume excavated as directed by the Engineer, calculated on the elevation difference between the designated top of the contaminated material and the excavated grade.

B. Payment

1. Payment includes full compensation for contaminated material excavation management and temporary on-site storage in accordance with the specifications, excavated material characterization and post-excavation sampling and analyses, disposal facility testing, dewatering of stockpiled excavated contaminated material, and disposal of dewatering leachate, disposal of decontamination water, and furnishing and disposing of personal protective equipment in accordance with all applicable Federal, State, and local regulations.

1.21 CONTAMINATED DEWATERING TREATMENT AND DISPOSAL (Item 20b)

A. Measurement

1. Contaminated dewatering on-site treatment and discharge shall be measured on a per gallon basis, computed to the nearest 1.0 gallon.

B. Payment

1. Payment for 20b in the Bid Form includes full compensation for removal, storage, treatment, and on-site discharge of contaminated groundwater including all labor, materials and equipment necessary to complete the dewatering work of this Section. Payment shall also include preparation and submittal of all required NPDES permits and all other permits required to treating and discharging treated groundwater.

1.22 TRANSPORTATION AND DISPOSAL OF CONTAMINATED MATERIAL (Items 20c thru 20e)

A. Measurement

1. Measurement will be on a unit weight basis in tons based on a scale measurement (certified weight slips) at the disposal facility.

B. Payment

1. Payment for transportation and reuse of contaminated material at an in-state landfill will be made at the unit price bid for Item 20c in the Bid Form. Price and payment shall be full compensation for furnishing all labor, materials, and equipment required to complete the Work as specified including preparing waste disposal documentation including profiles and bills of lading; loading, transporting and reuse at an in-state landfill; and all else incidental thereto for which separate payment is not provided under other items.

2. Payment for transportation and recycling of contaminated material at a recycling facility will be made at the unit price bid for Item 20d in the Bid Form. Price and payment shall be full compensation for furnishing all labor, materials, and equipment required to complete the Work as specified including preparing waste disposal documentation including profiles and bills of lading; loading, transporting and recycling at a recycling facility; and all else incidental thereto for which separate payment is not provided under other items.

3. Payment for transportation and disposal of contaminated material at an out-of-state landfill will be made at the unit price bid for Item 20e in the Bid Form. Price and payment shall be full compensation for furnishing all labor, materials, and equipment required to complete the Work as specified including preparing waste disposal documentation including profiles and bills of lading; loading, transporting and disposal at an out-of-state landfill; and all else incidental thereto for which separate payment is not provided under other items.

1.23 CURED-IN-PLACE PIPE LINER (Items 21a thru 21d)

A. Measurement

1. Measurement for cured-in-place pipe lining between manholes (Items 21a thru 21d) will be the number of linear feet of pipe actually lined, measured along the horizontal centerline of the sewer between the connections to the existing manholes. Measurement will be to the nearest foot.

B. Payment

1. Payment for installation of cured-in-place pipe lining will be made for the quantities determined above at the unit prices bid for Items 21a thru 21d on the Bid Form and shall be full compensation for furnishing all labor, materials and equipment required to do pre-construction inspection including light to moderate cleaning (excluding heavy cleaning), disposal of debris from cleaning, television inspection and videotapes; project notices; furnishing and installing cured-in-place pipe lining; removing and rebuilding manhole top sections to facilitate access for the lining installation if required; pavement replacement around manholes if required; removal of line obstructions (excluding protruding taps); materials testing; reopening all existing active service connections; post-construction inspection including television inspection; bypass pumping; and for all else incidental thereto for which separate payment is not provided under other items in the Bid Form.

2. Heavy cleaning shall be paid for under Item 23. Removal of protruding taps shall be paid for under Item 30.

1.24 OPEN CUT EXCAVATION SPOT REPAIR (Item 22)

A. Measurement

1. Measurement for payment for open cut excavation spot repair (Item 22) will for each spot repair performed.

B. Payment

1. Payment for open cut spot repairs will be made for the quantities determined above at the unit price bid for Item 22 on the Bid Form and shall be full compensation for furnishing all labor, materials and equipment required for site preparation; cutting and removing existing pavement, sidewalks and curbing, cutting; removal and disposal of existing sewer pipe to be replaced; pre-construction inspection including light to moderate cleaning (excluding heavy cleaning); disposal of debris from cleaning; preconstruction television inspection and videotapes; trench excavation (excluding rock and boulder excavation); backfilling and compaction; restoring the trench surface to grade; furnishing and installing geotextile fabric (if required), screened gravel pipe bedding; select common fill and common fill material; furnishing, laying, jointing, cleaning and testing the new pipe; PVC wye branches or DI wye branches on pipes being CIPP lined in locations where services are encountered in the spot repair; fittings; 5-ft of new sewer service pipe in locations where services are encountered within the spot repair; couplings and adaptors; sedimentation and erosion control; driving and removing sheeting and bracing; all restoration and/or replacement required including curbing, driveways, signs, lampposts, mailboxes, utility poles, etc. disturbed by the Contractor's operations to existing conditions; furnishing, placing and compacting bank run gravel/gravel borrow; initial trench to the trench width defined for Item 10a-1 and length as defined in Table A plus an additional 10-ft in length; final trench pavement to the trench width defined for Item 10a-1 plus two feet in width and length as defined in Table A plus an additional 12-ft; protection and crossing of existing structures and utilities; decking; safeguarding open excavations; care and protection of property; water for construction purposes; removal and disposal of excess materials; post-construction inspection including television inspection; bypass pumping, and all else incidental thereto, for which separate payment is not provided under other items in the Bid Form.

2. Heavy cleaning shall be paid for under Item 23.

1.25 HEAVY CLEANING OF EXISTING SEWERS AND DRAINS (Item 23)

A. Measurement

1. Measurement for heavy cleaning (Item 23) of existing sewer and drain pipe will be the actual number of linear feet of pipe cleaned, measured along the horizontal centerline of the pipe with no deductions for manholes and will be from the centerline of manhole to centerline of manhole. Measurement will be to the nearest foot.

2. Heavy cleaning is defined as cleaning requiring more than 5 passes to achieve acceptable results, as approved by the Engineer. Heavy cleaning completed without approval of the Engineer shall not be measured for payment.

B. Payment

1. Payment for heavy cleaning of existing drains and sewers will be made for the quantity determined above at the unit price bid for Item 23 on the Bid Form, which price and payment shall be full compensation for cleaning sewer pipe including the removal and disposal of all debris within the existing sewers, drains, and manholes, removal of grease,

mineral deposits, sediment, roots, for obtaining water, closed circuit television inspection, and all else incidental thereto for which separate payment is not provided under other items in the Bid Form.

2. Any sewer or drain requiring heavy cleaning, as ordered by the Engineer, for preparation for CIPP lining (Items 21a through 21d) or spot repairs (Item 22) shall be paid for under this item.

1.26 CURED-IN-PLACE PIPE LINER FOR SERVICE CONNECTIONS (Item 24)

A. Measurement

1. Sewer service lateral cured-in-place liner (Item 24), from 0 to 3 feet, will be measured for payment by the actual number of service lateral connection liners installed and accepted as determined by the Engineer. Measurement for payment does not signify the lateral liner is accepted.

B. Payment

1. Payment for sewer service lateral cured-in-place liner, Item 24, from 0 to 3 feet, shall be made for the quantity determined above at the unit price bid for on the Bid Form and shall be full compensation for furnishing all labor, materials and equipment required to perform pre-construction inspection including television inspection and preparation of digital videotapes (DVD); project notices; coordination with property owners and the Owner; removing and rebuilding manhole top sections to facilitate access for the lining installation if required; pavement replacement around manholes (25 square feet maximum payment per manhole); light preparatory cleaning and removal of line obstructions including hanging gaskets; stopping active infiltration; furnishing and installing the cured-in-place pipe liners as specified in Section 02769 and 02770 a minimum of 3 feet into the lateral; materials testing and acceptance; post-construction inspection including television inspection; and all else incidental thereto for which separate payment is not provided under other items in the Bid Form. No separate payment will be made for unclogging service laterals as a result of the operation.

1.27 REMOVAL OF EXISTING PROTRUDING SERVICE CONNECTIONS (Item 25)

A. Measurement

1. Measurement for grinding and sealing existing protruding service connections (Item 25) will be the actual number of service connections remediated.

B. Payment

1. Payment for removal of existing protruding tapped service connections by grinding and sealing, or by other approved trenchless procedures, will be made for the quantity determined above at the unit price bid for Item 25 on the Bid Form and shall be full compensation for furnishing all labor, materials and equipment required to do all test pits, if directed by Engineer; internally grinding down service connections protruding into the

sewer so they are flush with the pipe; chemically sealing the service connection; repair and replacement of any pipe beyond the rehabilitation area damaged by the Contractor's operation; post-construction inspection including television inspection; and all work incidental thereto for which payment is not provided under other items on the Bid Form.

1.28 CLEANING, REPAIR AND MANHOLE MONOLITHIC SURFACING (Item 26)

A. Measurement

1. Measurement for the cleaning, repair and installation of interior manhole monolithic surfacing of existing manholes (Item 26) shall be measured in place on a vertical foot basis from the manhole invert of the lowest pipe vertically to the top of the monolithic surfacing.

B. Payment

1. Payment for cleaning, repair and interior manhole monolithic surfacing of existing manholes will be made for the number of vertical feet actually sealed as determined above at the unit price bid under Item 26 in the Bid Form. Payment shall be full compensation for supplying and installing interior manhole monolithic surfacing; all preparatory work as required to prepare the surface of the manhole prior to application of monolithic surfacing including but not limited to repair of brickwork, sealing of active leaks, cleaning, high pressure washing, sandblasting, etc.; and all work incidental thereto for which payment is not provided under other items on the Bid Form.

1.29 MOBILIZATION (Item 27)

A. Measurement

1. Measurement for payment of mobilization costs (Item 27) shall be on a lump sum basis, but the cost shall not exceed 5 percent of the Bid Price, excluding Item 27 itself.

B. Payment

1. Payment of the lump sum price bid in the Bid Form for Item 27 shall be full compensation for all costs associated with initiating the Contract, exclusive of the cost of materials. Payment shall include compensation for all insurance, bonds, site preparation and in general the costs associated with establishing the work on site to assure that it is proceeding in a continuous manner.

1.30 ITEMS FOR WHICH THERE IS NO SPECIFIED QUANTITY

A. Sheeting Left in Place

1. Sheeting left in place at the written direction of the Engineer will be measured for payment in tons of steel left in place for steel sheeting and thousand board feet measure (MBFM), based on a commercial thickness of lumber used for wood sheeting. Steel or wood sheeting left in place by the Contractor at his convenience or where required when driven below mid-diameter of new pipelines will not be measured for payment.

2. The quantity of steel or wood sheeting left in place to be paid for at the supplemental unit price established in the Bid Form shall be the number of tons of steel or thousand board feet of lumber actually left in place as ordered by the Engineer. The Engineer may order sheeting to be cut off at any level, in which case payment will be made only for that portion left in the ground. Payment shall be full compensation for all additional labor, materials, equipment and incidentals associated with leaving the sheeting in place.

B. Common Fill

1. Common fill, when its use is required and directed by the Engineer and when furnished, placed and compacted for trench backfill and miscellaneous uses, will be measured in cubic yards at the actual in-place dimensions as determined by the Engineer. When used in trenches, the payment limits shall not exceed the trench widths defined for rock. No allowance will be made for loss from consolidation of material. Truck measurement will not be permitted. No additional payment will be made under this item for use of excavated material and any surplus material generated from the construction of this project.

2. Payment for furnishing and placing common fill, when its use is approved by the Engineer, will be made for the quantity as determined above at the supplemental unit price established in the Bid Form. This price and payment shall be full compensation for furnishing, hauling, placing, compacting and all else incidental thereto for which separate payment is not provided under other items.

3. Payment for gravel borrow refill material to replace unsuitable backfill material will be included under Item 9.

4. Payment for gravel refill materials to refill rock and boulder excavation will be included under Items 8a and 8b.

5. Payment for gravel borrow used for roadway reconstruction shall be paid for under Roadway Reconstruction (Item 10).

END OF SECTION

SECTION 01050
PROJECT CONTROLS (SURVEYING)

PART 1 GENERAL

1.01 SCOPE OF WORK

A. Provide and pay for field engineering services required for project; including but not limited to:

1. Survey work required for project controls and layout.

2. Certified as-built surveys specified herein.

B. Retain the services of a registered land surveyor licensed in the state of the project location to:

1. Identify existing control points and property line corners indicated on the Drawings.

2. Verify and record all existing structure locations in the vicinity of, or adjacent to, the proposed Work; and, the locations of all pro-posed structures and facilities.

3. Maintain an accurate record of locations of all new buried piping and existing buried piping and other buried existing facilities (piping, conduits, and structures) encountered and/or relocated during construction of the new Work.

1.02 RELATED WORK

A. Contract Closeout (Section 01700).

B. Project Record Documents (Section 01720).

1.03 SUBMITTALS

A. Submit, to the Engineer, the name, address and state registration and license number of proposed registered land surveyor.

B. On request of the Engineer, submit documentation to verify accuracy of field engineering work.

C. At the end of the project, and prior to final payment, submit certified drawing(s) (with the Surveyor's title block) of the items listed below. All surveys shall be tied to the applicable Grid System and shall indicate all pre-existing and new project benchmarks. Vertical Control shall conform to the project elevation datum designated on the plans.

1. Certified site survey at 1-in = 50-ft scale or larger, but not greater than 1-in = 20-ft scale, on 24-in by 36-in sheet(s), indicating the building corners, sidewalks, paved areas and location of all above ground structures within the project site or limits of construction.

2. Certified survey, drawn to the same scale as the Engineer's yard piping drawings, showing the locations, lines and grades in plan and profile views of all below-grade lines (piping and concrete-encased electrical ducts) exterior to buildings and other buried facilities (e.g.,

valves, tanks, etc). This requirement includes all utilities installed as a part of the scope of this project, as well as existing lines encountered during the installation of the new Work.

3. For pipeline projects (e.g., sewer, force main, water transmission, storm drainage, etc) provide a certified survey drawn at the same scale as the Engineer's line drawings indicating lines, grades, elevations and stationing at 100-ft increments, changes in alignment or grade. Provide elevations of structure inverts, pipe invert(s) and rim elevations on all flow structures.

1.04 QUALIFICATIONS OF SURVEYOR

A. Registered land surveyor, licensed in the state of the project location.

1.05 SURVEY REFERENCE POINTS

A. Existing basic horizontal and vertical control points for the project are those designated on Drawings.

B. Locate and protect control points prior to starting site work and preserve all permanent reference points during construction.

1. Make no changes or relocations without prior written notice to and approval by the Engineer.

2. Report to the Engineer when any reference point is lost or destroyed, or requires relocation because of necessary changes in grades or locations.

3. Require the surveyor to correctly replace project control points which may be lost or destroyed. Establish replacements based on original survey control.

1.06 PROJECT SURVEY REQUIREMENTS

A. Establish a minimum of two permanent bench marks on site, refe-renced to data established by survey control points.

1. Record locations, with horizontal and vertical data, on the as-built Survey.

2. Permanent benchmarks shall be installed and spaced for convenient reference and use at locations along the pipeline route and/or on the plant site.

3. Benchmarks shall be installed to National Geodetic Survey standards and shall include horizontal and vertical data, as well as the installation date.

B. Establish lines and levels; locate and lay out:

1. Site improvements.
   a. Stakes for grading, fill and topsoil placement.
   b. Utility slopes and invert elevations.
   c. Sidewalks, pavement, fencing, storm drainage facilities, and other finish surface work.

2. Batter boards for structures.

3. Building foundation, column locations and floor levels.

4. Controlling lines and levels required for mechanical and electrical trades.

C. If lines, levels or layouts are lost or destroyed, or if required by the Owner or Engineer, verify layouts by same methods.

D. Establish all lines and grades prior to construction of line work for all force mains, transmission mains, storm drainage piping, gravity sewers and other new utility lines at 100-ft increments, at defined breaks in grade, and at manholes.

PART 2 PRODUCTS (NOT USED)

PART 3 EXECUTION

3.01 RECORDS

A. Maintain a complete, accurate log of all control and survey work as it progresses.

B. Update the project as-built survey on a monthly basis, based on the work performed during the month. Submit one copy of up to date as-built documentation with Contractor's monthly applications for payment.

C. Maintain an accurate record of new and existing piping, conduit and structure changes, revisions, relocations, and modifications.

D. At the end of the project, submit the following:

1. Four signed and sealed prints of all required as-built survey information

2. Copy of all AutoCAD files of documents specified in Article 1.03.C, above on a CD or DVD.

END OF SECTION

© 2015 CDM Smith
All Rights Reserved

SECTION 01310
CONSTRUCTION SCHEDULING

PART 1 GENERAL

1.01 PROGRAM DESCRIPTION

A. A Critical Path Method (CPM) construction schedule shall be used to control the Work and to provide a basis for determining job progress. The construction schedule shall be prepared and maintained by the Contractor. All work shall be done in accordance with the established CPM schedule. The Contractor and all subcontractors shall cooperate fully in developing the construction schedule and in executing the work in accordance with the CPM schedule.

B. The construction schedule shall consist of a computerized CPM network (diagram of activities) presented in a time-scaled graphic (print-out) with reports, as specified herein.

1.02 QUALIFICATIONS

A. The Contractor shall have the capability of preparing and utilizing the specified CPM schedule, or engage the services of a specialized scheduling professional to do so. Within seven days of the award of contract, provide a résumé or qualifications statement for the individual within the Contractor's organization, or the outside consultant, who is being proposed as the responsible party for development and maintenance of the CPM schedule. The résumé or qualifications statement shall demonstrate that the proposed responsible party has successfully developed and maintained CPM schedules for at least three construction projects of the same size or greater than this project. The proposed responsible party for the CPM schedule is subject to approval by the Engineer and Owner. If the proposed responsible party for the CPM schedule is not approved by the Engineer and/or Owner, Contractor shall resubmit a more-appropriate candidate for approval.

1.03 SUBMITTALS

A. Contractor shall submit Interim, Preliminary, Baseline (also known as "as-planned") CPM schedules, revisions, and Monthly Status Reports, all including graphics, reports, and narratives, and an as-built schedule, as specified herein.

PART 2 PRODUCTS

2.01 SOFTWARE

A. Unless otherwise approved by the Engineer, the computer-based schedule shall be generated using Oracle-Primavera Contractor, or P6 Professional Project Management Software.

2.02 NETWORK REQUIREMENTS

A. Each schedule submittal shall contain the following identifying information:

1. Project Title, Owner's Contract Number, and the Engineer's Project Number

2. Contractor's name

3. All Contract milestones, as specified

4. The project calendar(s) (including work week and holidays)

5. Type of submittal (e.g., Interim, Preliminary, Baseline or Monthly Status Report)

6. A summary contract milestones

7. Data date and run (print) date

B. The network of activities shall show the order and inter-dependence of activities; and, show the sequence in which the work is to be accomplished, as planned by the Contractor. The basic concept of a network analysis diagram shall be followed to show how each activity is dependent on preceding activities (predecessors) and following activities (successors).

C. Detailed network activities shall include, but are not limited to,:

1. mobilization activities,

2. procurement activities (submittals, review and approval, fabrication, and delivery),

3. permitting and regulatory activities,

4. right-of-way activities (including utility agreements that require others to relocate existing utilities that affect the project),

5. construction activities (including demolition, rehabilitation, new construction and testing),

6. maintenance of existing facilities,

7. test and start-up activities (including testing, start-up, training, performance testing, and commissioning),

8. contract milestones (fixed and floating),

9. specified sequences, outages and coordination activities, and

10. any other activities needed to properly identify the scope of work and contract requirements.

D. All activities shall be sufficiently identified and/or described so that the scope of work of each activity is clear. All work tasks shall be broken down into appropriate scopes and durations to facilitate monitoring progress. Unless otherwise approved by the Engineer, no activities shall have durations of more than one month; except for off-site activities such as procurement and delivery of materials and equipment - or administrative or management activities that span the project duration that do not reflect earned progress.

E. Network activities shall be organized (grouped) by phases (or stages), physical areas, buildings, elevations, or other portions of the project.

F. Separate network activities shall be provided for each significant identifiable function in each trade area in each facility. Separate network activities shall be provided for subcontractors.

G. The number of network activities, sufficiency of description, and level of breakdown shall be subject to the Engineer's review and approval to confirm conformance with the specified requirements.

H. The format of the schedule network graphic shall be a time-scaled logic diagram - with a list of network activities and the specified data fields presented adjacent to the graphic display.

I. The following general requirements also apply to the network diagram.

1. The Critical Path (the sequence of project network activities that add up to the longest overall duration and thereby determines the shortest time possible to complete the project) shall be identified - preferably in 'red'.

2. Unless otherwise approved by the Engineer the Contractor's work schedule shall be based on 'normal work week' as defined in the Contract Documents – (typically 40 hours per week, consisting of five 8-hour days). Where 24-7 operations are mandated, Contractor's schedule shall include these times to complete the work.

3. The graphics shall indicate the calendar(s) on which activity durations are based (i.e., 5-day workweek or 7 calendar day week). When multiple calendars or work weeks are used, the graphics shall clearly indicate which calendars are used where.

4. The project calendar shall include exclusions for holidays observed by the Contractor and those indicated in the Contract Documents.

J. Each network activity shall have the following information (fields) listed alongside the activity on the graphic display.

1. Activity ID – a manually assigned designation (numeric or alphanumeric). The Contractor should use a logical approach to assigning identification to network activities to facilitate grouping (sorting) of activities.

2. Activity Description

3. Original Duration – including allowances for adverse weather interruptions – normal for the project location. Normal weather shall mean seasonally average weather conditions, as recorded by NOAA.

4. Percent complete – the Contractor's estimated percent complete for each network activity as of the data date for the respective report.

5. Remaining Duration - a calculated value based on Original Duration of each network activity and the estimated percent of completion for each activity.

6. Early Start Date

7. Early Finish Date

8. Late Start Date

9. Latest Finish Date

10. Total Float

11. Manhours – an estimated value representing the Contractor's estimate of direct labor manhours that will be required to execute each network activity.

12. Cost – an estimated value representing the Contractor's estimate of the accumulated cost of all components of each network activity, including indirect costs and allocated profit and overhead (general conditions, permits, insurance, etc.)

2.03 SUBMITTAL REQUIREMENTS

A. Each schedule submittal shall include the following elements:

1. Graphics – unless otherwise approved by the [Engineer] [Construction Manager], the network graphics shall be printed on 24-inch by 36-inch sheets; including a list of activities and the specified data fields.

2. Narrative
   a. The Narrative shall consist of a written report by the Contractor providing an overview of the schedule – specific to each submittal.
   b. The Narratives for developmental submittals, i.e., Interim and Preliminary, shall describe the Contractor's approach to executing the project Work.
   c. The Narrative for the Baseline Schedule shall:
      1) explain key activities and assumptions on which the schedule is based;
      2) describe the Critical Path;
      3) discuss key deliveries that might adversely affect the project schedule; and,
      4) explain the Contractor's approach to adverse weather interruptions – normal for the project location. Normal weather shall mean seasonally average weather conditions, as recorded by NOAA.
   d. The Narratives provided with Monthly Status Reports (updates) shall also identify:
      1) any changes the Contractor has made to the CPM logic (including any added, modified or deleted activities,
      2) any delays that have been encountered, and
      3) remedial actions or recovery steps the Contractor will employ to arrest and/or recover from such delays.

B. Reports

1. The following reports are required to be submitted with Baseline Schedule, when a major revision is made to the schedule, and when requested by the [Engineer] [Construction Manager].
   a. Activity – a report listing all network activities, sorted by activity ID
   b. Early Start – a report listing all network activities, sorted by Early Start date
   c. Total Float – a report listing all network activities, sorted by Total Float (ascending from low to high).
   d. Predecessor/Successor – a report of all activities, sorted by Activity ID that lists all predecessor and successor activities for each network activity.

2.04 ACCEPTABILITY

A. The Contractor shall submit the CPM schedule submittals, as specified, and resubmit as needed, until they are in compliance with Contract requirements.

B. The Engineer's review of the Contractor's construction schedule submittals will only be for conformance with the Contract requirements – including but not limited to contract time and work sequences specified in the contract documents. The Engineer's review of the schedule shall not include the Contractor's means and methods of construction or safety. The Engineer's concurrence, acceptance, or approval of the Contractor's schedule submittals will not relieve the Contractor from responsibility for complying with the Contract Scope, Contract Time or any other contract requirement. Any indication of concurrence, acceptance, or approval of the Contractor's schedule will only indicate a general conformance with the Contract Requirements.

C. Engineer's review of the Contractor's construction schedule submittals shall not relieve the Contractor from responsibility for any deviations from the Contract Documents unless the Contractor has in writing called Engineer's attention to such deviations at the time of submission and Engineer has given written concurrence to the specific deviations, nor shall any concurrence by the Engineer relieve Contractor from responsibility for errors and omissions in the submittals. Concurrence of the CPM Activity Network by the Engineer is advisory only and shall not relieve the Contractor of responsibility for accomplishing the Work within the Contract completion date(s).

D. Concurrence, acceptance, or approval of the Contractor's CPM schedule by the Engineer in no way makes the Engineer an insurer of the CPM schedule's success, nor liable for time or cost overruns resulting therefrom.

E. Failure to include any element of work required for the performance of this Contract will not excuse the Contractor from completing all Work required within the Contract completion date(s), notwithstanding the review of the network by the Engineer.

F. CPM schedules that contain activities with negative float, or which extend beyond the contract completion date, will not be acceptable.

G. Except where earlier completions are specified, CPM schedules which show completion of all work prior to the contract completion date may be indicated; however, in no event shall they constitute a basis for claim for delay by the Contractor.

PART 3 EXECUTION

3.01 IMPLEMENTATION SCHEDULE

A. Interim Schedule

1. Within 15 days following the receipt of the Notice to Proceed, submit an Interim Schedule indicating the planned operations during the first 60 calendar days after Notice to Proceed. In addition, the Contractor shall indicate its general approach for the balance of the project.

2. While the Preliminary schedule is being developed, the Contractor shall update the Interim schedule on a monthly basis – indicating actual progress - until the Preliminary schedule is submitted.

B. Preliminary Schedule

1. Within 45 days following the receipt of Notice to Proceed, submit a proposed Preliminary Schedule to the Engineer. The Preliminary Schedule shall consist of a draft computer-generated CPM-schedule showing the entire Scope of Work. The Preliminary Schedule shall not include any actual progress earned during development of the schedule (i.e., statused as of the Notice to Proceed).

2. Within 15 days of submittal of the Preliminary Schedule (i.e., within 60 days of receipt of the Notice to Proceed), meet with the Engineer to discuss the review comments.

3. Once the Preliminary Schedule is submitted, Contractor shall discontinue updating the Interim Schedule. Provide monthly updates of the Preliminary Schedule until concurrence, acceptance, or approval of the Baseline Schedule.

C. Baseline (as-planned) Schedule

1. With 10 days of the review meeting on the Preliminary Schedule submittal, the Contractor shall incorporate the Engineer's comments into the network and submit a Baseline Schedule. Resubmit the Baseline Schedule, as required until it is deemed acceptable as stated in Paragraph 2.04, above.

2. Upon concurrence, acceptance, or approval of the Contractor's initial Baseline Schedule, statused as of the Notice to Proceed date, it shall be recognized as the basis against which the Contractor's progress shall be measured.

D. Monthly Status Reports

1. Monthly Status Reports shall include updated graphics and a narrative. In addition, if requested by the Engineer, Contractor shall provide copies of one or more of the standard reports listed in Paragraph 2.03.B.

2. The Contractor shall provide Monthly Status Reports (schedule updates) commencing approximately 30 days after submission of the Interim Schedule. Unless approved otherwise by the Engineer, the Monthly Status Reports shall be statused as of the end of each calendar month.

3. While the Preliminary Schedule is being developed, the Contractor shall update the Interim schedule on a monthly basis – indicating actual progress - until the Preliminary Schedule is submitted.

4. While the Baseline Schedule is being developed, the Contractor shall update the Preliminary Schedule on a monthly basis – indicating actual progress - until concurrence, acceptance, or approval of the Baseline Schedule.

5. Once the initial Baseline Schedule is complete, Monthly Status Reports shall be based on the Baseline Schedule.

6. Prior to generating each month's status report, meet with the Engineer to agree to the percent complete of each network activity.

3.02 DELIVERABLES

A. Unless approved otherwise by the Engineer, all schedule submittals shall be printed in color on sheets no smaller than 11-in by 17-in or larger than 24-in by 36-in and may be divided into as many separate sheets as required.

B. Interim Schedule: Submit three copies to the Engineer.

C. Preliminary Schedule: Submit three hard (paper) copies to the Engineer.

D. Baseline Schedule: Submit three hard (paper) copies, one electronic copy (PDF), and a copy of the program files to the Engineer.

E. Monthly Status Reports: Submit three copies and one electronic copy on CD to the Engineer; and if requested, an electronic copy of the program files for the respective update.

3.03 PROGRESS REPORTING

A. Progress under the approved CPM schedule shall be reported monthly by the Contractor by submitting a Monthly Status Report. Unless otherwise approved by the Engineer, not less than seven days prior to the due date of the Monthly Status Report, the Contractor shall meet with the Engineer's representative to jointly evaluate the status of each network activity. Each activity shall be updated to reflect the actual progress (percent complete) and the actual dates activities were started and completed, as applicable.

B. The Monthly Status Report shall include an update of the computer-generated network graphics and a Narrative report. The Narrative shall include:

1. A description of the progress during the reporting period in terms of completed activities

2. A summary of the Critical Path

3. An description or explanation of each delays to network activities

4. A description of problem areas, current and anticipated delaying factors and their anticipated effect on the performance of other activities and completion dates

5. An explanation of corrective action taken or proposed.

6. This report, as well as the CPM Status Report, will be discussed at each progress meeting.

3.04 RESPONSIBILITY FOR SCHEDULE COMPLIANCE

A. Whenever it becomes apparent from the current CPM schedule and CPM Status Report that delays to the critical path have resulted and the contract completion date will not be met, or when so directed by the Engineer, take some or all of the following actions at no additional cost to the Owner. Submit to the Engineer for approval, a written statement of the steps intended to take to remove or arrest the delay to the critical path in the approved schedule.

1. Increase construction manpower in such quantities and crafts,

2. Increase the number of working hours per shift, shifts per day, working days per week,

3. Increase the amount of construction equipment, and/or

4. Reschedule activities to maximize the concurrence of activities and comply with the revised schedule.

B. If when so requested by the Engineer, failure to submit a written statement of the steps intended to take or should fail to take such steps as approved by the Engineer, the Engineer may direct the Contractor to increase the level of effort in man-power (trades), equipment and work schedule (overtime, weekend and holiday work, etc) to be employed by the Contractor in order to remove or arrest the delay to the critical path in the approved schedule and the Contractor shall promptly provide such level of effort at no additional cost to the Owner.

3.05 ADJUSTMENT OF CONTRACT SCHEDULE AND COMPLETION TIME

A. If the Contractor wants or needs to make changes in his/her execution of the construction schedule that would affect the approved CPM schedule, he/she shall notify the Engineer in writing stating what changes are proposed and the reasons for the changes. If the Engineer approves such changes, the Contractor shall revise and submit a revised schedule for approval - without additional cost to the Owner. The CPM schedule shall be adjusted by the Contractor only after prior approval of his/her proposed changes. Adjustments may consist of changing portions of the activity sequence, activity durations, division of approved activities, or other adjustments as may be approved by the Engineer; however, the addition of extraneous, non-working activities and activities that add unapproved restraints to the CPM schedule will not be allowed.

B. Shop drawings that are not approved on the first submittal will require the addition of network activities for the resubmittals.

C. Equipment that does not pass the specified tests will require the addition of network activities for the retesting.

D. The contract completion time will be adjusted only for causes specified in this Contract. In the event the Contractor requests an extension of any contract completion date, he/she shall furnish such justification and supporting evidence as the Engineer may deem necessary to determine whether the Contractor is entitled to an extension of time under the provisions of this Contract. After receipt of such justification and supporting evidence, the Engineer's shall perform an assessment or evaluation of the appropriate change in contract time based upon the currently approved CPM schedule and on all data relevant to the extension. Inexcusable delays (attributable to the Contractor) and non-critical delays (delays to activities which, according to the CPM schedule, do not affect any contract completion date shown by the Critical Path) shall not be the basis for a change in contract time. The Engineer will provide a written recommendation to the Owner based on its assessment, with a copy to the Contractor. The Contractor shall not change any fixed contract milestones or required completion dates without the approval of the Owner, evidenced by the execution of a contract change order. However, the Contractor should make note of such requests for changes in contract time in the narrative of monthly schedule status reports.

E. Each request for change in any contract completion date shall be submitted by the Contractor to the Engineer in accordance with the notification requirements stipulated in the form of contract

or general conditions. No time extension will be granted for requests that are not submitted in accordance with the Contract requirements.

F. Total float in the approved CPM network belongs to the project; i.e., either the Owner or Contractor may take advantage of available total float on a first-come, first-served basis. Therefore, without obligation to extend either the overall completion date, or any intermediate completion dates set out in the CPM network, the Owner may initiate changes to the work or delay work that absorb available total float existing at the time of the change or delay. Owner initiated changes or delays that affect the Critical Path on the approved CPM network shall be the sole grounds for extending (or contracting) contract completion dates or fixed milestones.

G. The Owner controls the total float in the approved CPM network and, therefore, without obligation to extend either the overall completion date or any intermediate completion dates set out in the CPM network, the Owner may initiate changes to the work that absorb float time only. Owner initiated changes that affect the Critical Path on the approved CPM network shall be the sole grounds for extending (or contracting) said completion dates but not overall construction duration of the project. Contractor-initiated changes that encroach on the float time identified in the approved CPM network may be accomplished with the Owner's concurrence; but no increase in contract duration. Such changes, however, shall give way to Owner-initiated changes competing for the same float time.

3.06 COORDINATING SCHEDULES WITH OTHER CONTRACT SCHEDULES

A. Where work is to be performed under this Contract concurrently with or contingent upon work performed on the same facilities or area under other contracts, the Contractor's CPM Schedule shall be coordinated with the schedules of the other contracts. Obtain the schedules of the other appropriate contracts from the Owner for the preparation and updating of the CPM schedule and make the required changes in the schedule when indicated by changes in corresponding schedules.

B. In case of interference between the operations of different contractors, the Owner will determine the work priority of each contractor and the sequence of work necessary to expedite the completion of the entire project. In all such cases, the decision of the Owner shall be accepted as final. The temporary delay of the Contractor's work due to such circumstances shall not be considered as justification for claims for additional compensation.

END OF SECTION

© 2015 CDM Smith
All Rights Reserved

SECTION 01500
TEMPORARY FACILITIES

PART 1 GENERAL

1.01 SITE OFFICES

A. Contractor shall provide offices to be used for the duration of the Contract for its own personnel and its subcontractors on the job site. Such offices shall be maintained in a clean, orderly condition. An authorized representative shall be present at all times the Work is in progress. Instructions received there from the Engineer shall be considered as delivered to the Contractor.

B. Engineer's Office

1. Contractor shall provide a temporary office facility for exclusive use by the Engineer for the duration of the project. The Contractor may provide as an alternate to the on-site trailer, a separate office space in a building of equal area as specified adjacent to the job site for use by the Engineer.

2. The minimum details of construction are specified in PART 2.

3. Temporary offices shall be installed in accordance with local codes including permitting and ADA accessibility, if applicable. Contractor shall pay all fees.

4. Contractor shall connect to municipal water and/or wastewater service, where available. Otherwise, provide septage pumping and bottled water services.

C. Furnishings - Provide furnishings for the Engineer's office as specified in PART 2.

D. Equipment - Provide equipment for the Engineer's office as specified in PART 2.

1.02 COMMUNICATIONS

A. Install two telephone lines in the Engineer's field office for the Engineer's exclusive use:

1. one voice grade line with caller ID and call waiting features

2. a second line for a dedicated fax line.

B. Pay all costs for installation, maintenance, and removal of the telephone and internet service and instruments. The monthly cost of all calls made and received by the Engineer, including toll and long distance calls, shall be paid for by the Contractor for the duration of the project.

1.03 TEMPORARY POWER AND LIGHT

A. Contractor shall furnish temporary light and power, including 220 Volt service for welding, complete with wiring, lamps and similar equipment as required to adequately light all work areas

and with sufficient power capacity to meet the project needs. Make all necessary arrangements with the local electric company for temporary electric service and pay all expenses in connection therewith.

B. Provide connections to existing facilities sized to provide service required for power and lighting. Contractor shall pay the costs of power used.

C. Provide properly configured NEMA polarized outlets to prevent insertion of 110-120 Volt plugs into higher voltage outlets. For connection of power tools and equipment, provide outlets equipped with ground-fault circuit interrupters, reset button and pilot light.

D. Provide grounded extension cords. Use heavy duty cords where exposed to abrasion and traffic. Provide waterproof connectors to connect separate lengths of electric cords if more than one length is required.

E. Provide general service incandescent lamps as required for adequate illumination. Provide guard cages or tempered glass enclosures where exposed to breakage. Provide exterior fixtures where exposed to moisture.

1.04 TEMPORARY HEAT

A. Provide heat as may be necessary for thawing out and heating the ground or materials and for proper execution, protection and drying-out of the Work.

1.05 WEATHER PROTECTION

A. Contractor shall furnish, install and maintain temporary heat and enclosures to provide adequate working areas for personnel during the cold weather months.

B. The Contractor shall furnish temporary heating units (UL or FM listed) to maintain reasonable temperatures within temporary enclosures.

1.06 TEMPORARY AIR, STEAM AND WATER

A. Provide all air, steam and water, including temporary piping and appurtenances required for cleaning and testing pipelines and equipment. Remove temporary piping and appurtenances upon approval of equipment being tested.

1.07 SANITARY FACILITIES

A. Provide self-contained, single-occupant toilet units of the chemical, aerated recirculation, or combustion type, properly vented and fully enclosed in a fiberglass or other approved non-absorbent shell.

1.08 FIRE EXTINGUISHERS

Provide portable UL-rated, Class A fire extinguishers for site offices and similar spaces. In other locations, provide portable UL-rated Class ABC dry chemical extinguishers or a combination of NFPA recommended Classes for the exposure. Comply with NFPA 10 and 241 for classification, extinguishing agent and size required by location and class of fire exposure.

1.09 TEMPORARY INTERNET ACCESS

A. Provide high speed internet access in the Engineer's Field Office for the Engineer's exclusive use. High speed internet access at minimum shall be capable of 5 mbps upload and 25 mbps download speeds. High speed internet access for Engineer's use shall be Cable, DSL, or T-1 type Service.

B. Pay all costs for installation, maintenance and removal of the high speed internet service and instruments. The monthly costs of high speed for exclusive use by the Engineer shall be paid for by the Contractor for the duration of the project.

C. Provide wireless internet capabilities within the Engineer's office.

PART 2 PRODUCTS

2.01 ENGINEER'S TRAILER

A. The Engineer's field office shall be one 12-ft by 50-ft trailer (600 SF) or a separate building office space divided into three rooms and a lavatory. Trailer shall be weathertight construction with floor, walls and ceiling fully insulated. Ceiling shall be 8-ft high with acoustical tile. Interior walls shall be 3/8-in architectural wooden panels. All floors shall be covered with industrial grade vinyl composition tile. Exterior of trailer shall be provided with painted skirting.

B. The trailer shall be provided with two exterior doors provided with Medeco lock systems (or equal), keyed alike. The Engineer shall be provided with four keys. At each entrance, a wooden stairway with railing and 6-ft by 6-ft platform shall be provided. Each platform shall be provided with one McMaster-Carr Model 6255T14 Shoe and Boot Scraper securely mounted to the platform. Each room shall have a door. Provide separate toilet facilities for the exclusive use of the Engineer. The lavatory door shall be equipped with a lock. Each office shall have at least one window. All windows shall be Thermo pane glazed and be provided with screens and venetian blinds. Lavatory shall be equipped with an exhaust fan and vent. Lavatory shall be equipped with a flush toilet, wash basin with faucet, medicine cabinet with mirror, toilet tissue holder, paper towel holder, light fixture, and five-gallon capacity water heater.

C. Plumbing System

Potable water shall be provided to all fixtures and a shutoff valve shall be installed at each fixture or appliance. All fixtures shall be approved house type and shall be vented and trapped. All wastes shall be connected into one 4-in line which shall be run into the existing sanitary system or waste holding tank(s). All plumbing and fixtures shall be in accordance with local laws and codes. All exterior lines shall be heat traced and adequately insulated to provide freeze-proof operation.

D. Heating/Cooling System

The trailer shall be provided with central heating and air conditioning. The system shall be capable of maintaining an interior temperature of 70 degrees F when the exterior temperature is zero degrees F and an interior temperature of 75 degrees F when the exterior temperature is 100 degrees F. The system shall be thermostatically controlled with a thermostat located on an interior partition, the exact location of which to be approved by the Engineer.

E. Electrical System

Installation shall include entrance connectors, grounding, enclosed fused service switches and branch circuit fuse boxes. Separate circuits shall be provided for lighting and other electrically operated items. Separate circuits shall be provided for the water heater, the photocopier and three separate circuits for computers. Minimum circuit size shall be two-conductor No. 12 AWG. Use heavier conductors where required. The entire electrical system and trailer shall be properly grounded.

F. Lighting and Outlets

Lighting shall be provided by fluorescent ceiling fixtures furnishing 20 foot-candles at desk height, uniform throughout. Each room shall be provided with a wall switch for ceiling fixtures. Each area shall be provided with two duplex convenience outlets. These outlets are in addition to the circuits provided for the appliances specified above.

2.02 FURNISHINGS

A. Contractor shall provide the following furnishings for the Engineer's temporary field office for the duration of the project. All furnishings shall be new – or in very good condition – subject to approval of the Engineer.

1. Four 60-in by 30-in desks with file drawer and 5 drawers, all lockable.

2. One upholstered swivel type chair with arms for each desk.

3. One 30-in by 84-in conference table

4. Eight armless side chairs (stacking type)

5. Two 54-in by 30-in folding tables

6. Six file cabinet, 4 drawer, legal size, Hon No. HN-315C, or equal

7. Four wastebaskets

8. One rolling plan storage rack, 10-stick capacity

9. One plan table/drafting table and elevated drafting chair with light

10. One lockable storage cabinet, 72-in high, 36-in wide, and 18-in deep

11. Two steel bookcase units, 4 shelves high, Hon No. HN-S48 ABC, or equal

12. One digital telephone answering machine

13. 24 painted steel coat hangers and coat racks

14. One electric bottled water dispenser with hot and cold outlets and refrigerator unit. Adequate water bottles shall be provided (and paid for by the Contractor) until Final Completion

15. One wall-mounted first aid kit, McMaster-Carr 9501T1 or equal

16. Two smoke detectors, with batteries

17. Two dry erase boards, aluminum frame, 36-in by 60-in, markers and eraser, Quartet Model No. TS-S 535 or equal

18. One 1000-watt minimum 1.4-cuft microwave oven

19. One 6-cf refrigerator

20. Cross-cut shredder with basket, Fellowes Model No. P600C02, or equal

21. One first aid kit, OSHA (1910.151.b) and ANSI (Z308.1-2003) compliant, suitable for ten people.

22. Air Conditioner (12,000 BTU)

2.03 EQUIPMENT

A. Contractor shall provide the following equipment for the Engineer's temporary field office for the duration of the project. All equipment shall be new.

1. Photocopying machine with 50-sheet auto-feeder, capable of copying and printing letter-sized, legal-sized, and 11x17-inch documents in both color and black and white.

2. Facsimile machine with 20-page auto feeder.

3. Answering machine with digital recorder.

4. Digital Camera: Contractor shall provide one new digital camera for Engineer's use during the project duration. The digital camera shall be minimum 16 mega pixel and 12X optical/4X digital zoom. Camera shall include 2-64 GB memory cards, Class 10 or greater, SanDisk or approved equal. Rechargeable NiH batteries and charge kit, flash memory reader, USB cables and all necessary software for download to the site computer. The digital camera shall be Model No. ELPH 340 HS by Canon or approved equal. After completion of project the camera will become the property of the Owner.

5. Computer System with Printers

A. All computer and related items are to be new. All programs and peripherals to be properly and fully loaded, connected, and operational (to become property of Owner):

2- IBM/PC compatible laptop by Dell or approved equal as follows (minimum requirements):

I7-3820QM Processor
16 GB ram
NVIDIA Quadro K3100M graphics
256 GB SSD hard drive
Bluetooth
17.3 FHD 1920X1080 screen
16x DVD +/- RW
Camera
Intel6300 wireless
Vpro
Wireless keyboard/Bluetooth
Wireless mouse w/ wheel and bluetooth

2- 22-inch VGA color display monitor, auxiliary keyboard, and docking station. Provide a protective carrying case for each omputer.

2- Microsoft® Window7 (Windows8 is not an approved equal)

2- McAfee *Anti-Virus* latest edition

2 - 4 Terabyte external hard drive by MyBook or equal (USB 3.0)

2- Microsoft® *Office 2013 Professional Edition*™, latest version

1- Printer: Hewlett Packard color laser printer (Pro MFP M476dw) or equal. Include black and color ink cartridges.

3- 5-Plug power directors

8- Surge Protectors

All cables necessary for the docking stations, monitors, keyboards, printers, telephones, network, connection of four computers to printer and any other external devices and all services to provide an interconnected office computer system.

B. One Hewlett Packard color LaserJet printers HP Color LaserJet Enterprise M651nInclude jet direct network printing port. Include black and color ink cartridges.

C. Contractor to provide paper and ink cartridges, as required, for the duration of the project.

6. Four 8-outlet surge protectors with six foot cord and minimum 1800-joule energy rating. Belkin 950206, or equal.

7. One coffeemaker Krups Model No. 198-4F or equal and K-cups for the duration of the project (two types) with an estimated usage rate of 1 box of each type of k-cups per week, creamers, sugar, and non-sugar sweeteners.

8. Tablets as follows (black color with WiFi and cellular service capabilities to match OWNER's current provider). Coordinate with OWNER prior to purchase for :

   i. Three iPad Air 2, 64-GB (to be turned over to the OWNER).

   ii. Three iPad mini 3, 64-GB (to be turned over to the OWNER).

PART 3 EXECUTION

3.01 ENGINEER'S OFFICE

A. Engineer's trailer or office space shall be set up and ready for occupancy within 30 days following the Effective Date of Agreement.

   1. Provide regular office cleaning services for the duration of the project.

   2. Provide supplies including, but not limited to restroom supplies (toilet tissue paper, paper towel, and soap), as well as light bulbs, air conditioner filters, water, coffee, etc.

   3. Provide office supplies for printers and fax machines, etc.

   4. Supply all fuel for heating and pay all utility bills.

B. Engineer's trailer shall be removed and the site shall be cleaned up and restored before Final Completion of the project.

END OF SECTION

© 2015 CDM Smith
All Rights Reserved

SECTION 01570

TRAFFIC REGULATION

PART 1 GENERAL

1.01 REQUIREMENTS

A. All traffic control work performed by the Contractor shall be in accordance with the Manual on Uniform Traffic Control Devices 2009 Edition (MUTCD) as amended, the latest version of the Massachusetts Department of Transportation (MassDOT) Standard Specification for Highways and Bridges, the Contract Plans and these specifications. Where reference is made to one of the aforementioned publications, the revision in effect at the time of bid opening shall apply.

B. The Contractor shall furnish, operate and maintain equipment, services and personnel with traffic control and protective devices, as required to expedite vehicular traffic flow during construction.

C. Detailed traffic control plans have been provided for use by the Contractor. The Contractor shall submit any requested modifications to the Engineer for review. All changes to the traffic control plans shall be designed by a Massachusetts Registered Professional Engineer, detailing all requested changes to the plans including all temporary changes in traffic control equipment, street or road closures, detours, etc. prior to the start of construction for review by the Engineer in conformance with the Contract Documents and the Massachusetts Department of Transportation, Highway Division Permit to Access State Highway. Plans must address concurrent operations as required to ensure the proper flow of traffic within the project area. The Contractor shall make every effort to adhere to the plan. When necessary, the Contractor shall update this plan and forward these changes to the City of New Bedford, Engineer, Massachusetts Department of Transportation, Highway Division (Route 18), City of New Bedford Police Department, Fire Departments, Traffic Commission, School Departments, SRTA Bus Company, Emergency Medical Services and ABC Disposal Company for approval. The City of New Bedford reserves the right to modify the plan through the course of the Contract without modifying Contractor's schedule or cost.

D. The Contractor shall remove temporary equipment and facilities when no longer required and restore grounds to original or to specified conditions.

E. The Contractor shall notify all property owners, Massachusetts Department of Transportation, Highway Division, and City of New Bedford at least 72 hours in advance of any work that will interfere with access to their residence or place of business.

F. No road shall be closed to traffic or traffic patterns modified without prior consent of the Massachusetts Department of Transportation, Highway Division, Engineer and the City of New Bedford. Contractor shall submit a written request to Massachusetts Department of Transportation, Highway Division, the New Bedford Traffic Commission and Engineer 72-hr (Saturdays, Sundays and Legal holidays excluded) in advance of request for traffic pattern modifications. Written permission shall be obtained prior to proceeding. Owner reserves right to reject requests without modifying schedule or cost.

G. Traffic control, including but not restricted to signing and traffic control devices, shall be provided for all openings in roads by the Contractor in accordance with City of New Bedford and Massachusetts Department of Transportation, Highway Division Standards.

H. Work within the traveled way is restricted to between 7:00 a.m. to 5:00 p.m. (Monday through Friday) with the exception of road closure areas, unless otherwise specified for 24-hour work or those locations that are mandated for different hours per the approved MassHighway permit to access state highway. Contractor shall submit written request to the Owner and Engineer for modification to this time restriction. See Section 00800 for additional requirements regarding work hours and the Drawings.

I. The suggested work zones shown in the Transportation Management Plans (TMPs) are not developed to accommodate all proposed work and it is anticipated that Contractor shall implement the relevant typical traffic control setup for such work. Anticipated pedestrians detour routes are generally not shown in the TMPs and the Contractor shall also implement appropriate pedestrian detours as required and as directed by the Engineer.

J. The Contractor shall cover all directional, regulatory and warning signs that are not in use.

1.02 MINIMUM REQUIREMENTS FOR TRAFFIC CONTROL

A. The Contractor shall provide for access to all buildings including business and parking areas at all times, unless otherwise specified in the plans.

B. One through travel lane having a minimum width of 11-ft shall be provided for both directions (lane to be shared and the direction of travel to alternate is some situations under police officer control), unless otherwise specified in the plans.

C. Police detail may be required at certain times in order to maintain safe traffic control within the project area. Suggested Police Detail locations are shown in the TMPs, additional locations and changes will be determined by the Engineer or City of New Bedford. Police details will be paid for by the City of New Bedford. Policing is discussed in Policy Memorandum included in Part II of the Supplementary Conditions.

D. The Contractor shall not be allowed to utilize detours unless the detour is already identified in the traffic control plans. No detour shall be allowed without prior approval from Massachusetts Department of Transportation, Highway Division (Route 18), the Engineer and the City of New Bedford. A detailed Traffic Control Detour Plan and all requested modification shall be submitted to Massachusetts Department of Transportation, Highway Division (Route 18), and the Engineer showing schedule, signing and control for the proposed detour regardless if shown on the Drawings. Said plan/s shall be submitted at least 5 working days prior to the proposed detour.

E. See Drawings for additional requirements.

F. Special attention should be paid at the location of pedestrian crossings and at the donut shop drive throughs on the project. Coordinate activities with required vehicular and pedestrian safety operations at all locations on the project. Contractor should be advised that modification to the established traffic management set-ups may be required as directed by the Owner or Engineer to accommodate such businesses. Contractor shall make such modifications requested without additional compensation or time extension.

1.03 SUBMITTALS

A. The Contractor shall submit traffic control phased plans showing the setup, detours, number and width of open lanes and schedule for review by the Engineer prior to any work commencing within the right-of-way. These submittals shall be for both daytime operations and nighttime. Submittals shall be given to the Engineer a minimum of 30 days prior to the start of construction, Saturdays, Sundays and legal holidays excluded.

B. All required submittals for traffic management (i.e. traffic control plans, detour plans, sign plans, etc.) shall be stamped by a registered professional engineer in the Commonwealth of Massachusetts. Contractor may submit as his/her traffic management plan the traffic management plans provided by the Engineer which does not have to be re-stamped by a Registered Professional Engineer in the Commonwealth of Massachusetts. Any changes required by the Contractor to these plans to facilitate his/her means and methods for completion of the work must be submitted to the Engineer for review and shall be stamped by a Registered Professional Engineer in the Commonwealth of Massachusetts.

1.04 TRAFFIC CONTROL DEVICES

A. The Contractor shall provide and operate traffic control and directional signals required to direct and maintain an orderly flow of traffic in all areas under all Contractors' control, or affected by all Contractor's operations.

B. Provide traffic control and directional signs, mounted on barricades or standard posts at the following locations:

1. Each change of direction of a roadway and each crossroads.

2. Detours

3. Parking areas

4. For business within detour routes

C. Contractor will be required to furnish, install, remove and relocate temporary barriers, fencing, signage and other traffic safety devices for various traffic setups related to different phases of the project. Contractor shall provide where shown on the Drawings and within the approved traffic management plans traffic safety devices including but not limited to temporary jersey barriers, temporary jersey barriers with fencing, temporary impact attenuators, reflectorized drums with lighting, temporary lighting for night work where required and approved, etc. All traffic control devices shall conform to the MHSSHB and MUTCD.

D. Existing permanent traffic control signing and devices, including guardrails, shall not be removed unless called for on the Contract Plans or without the prior consent of the agency responsible for the road and the Engineer.

E. Detours around construction will be subjected to the approval of the City of New Bedford and the Engineer. Where detours are permitted the contractor shall provide all necessary barricades and signs as required to divert the flow of traffic. While traffic is detoured the Contractor shall expedite construction operations and periods when traffic is being detoured will be strictly

controlled by the City of New Bedford. Signage is required where shown on the Drawings and the approved Traffic Management Plans, and in accordance with the Permit to Access State Highway Layout.

F. After completion of the project, the Contractor shall remove all construction signing and support systems and patch the disturbed area to match existing as closely as possible and to the satisfaction of the Engineer.

G. The Contractor shall take precautions to prevent injury to the public due to open trenches in accordance with all Massachusetts General Laws. Night watchmen may be required where special hazards exist, or police protection provided for traffic while work is in progress. The Contractor shall be fully responsible for damage or injuries whether or not police protection has been provided.

H. The Contractor shall take precautions to prevent injury due to structures above grade. The contractor shall ensure that all structures (e.g. – frames and cover, gate box covers etc.) shall be clearly marked with safety orange paint or lighted barrel at all times or until finished grade is set. Type of protection shall be approved by the Engineer.

1.05 CONSTRUCTION PARKING CONTROL

A. Contractor shall control vehicular parking to preclude interference with public traffic or parking, access by emergency vehicles, Public Works Department operations, or construction operations.

B. Contractor shall monitor parking of construction personnel's private vehicles, maintain free vehicular access to and through parking areas and prohibit parking on or adjacent to access roads in non-designated areas. No parking will be allowed in the parking areas owned by the City of New Bedford (i.e., International Marketplace parking lot), or privately owned lots (i.e., End Zone, Papa Johns, or Antonio's restaurant.)

1.06 HAUL ROUTES

A. Contractor shall be responsible for consulting with governing authorities to establish public thoroughfares that will be used as haul routes and site access.

B. No access is allowed across the intersection of Coggeshall Street and Acushnet Avenue or Sawyer Street and Acushnet Avenue due to the recent reconstruction work that has occurred.

PART 2 PRODUCTS (NOT USED)

PART 3 EXECUTION (NOT USED)

END OF SECTION

© 2015 CDM Smith
All Rights Reserved

SECTION 01740
WARRANTIES AND BONDS

PART 1 GENERAL

1.01 SCOPE OF WORK

A. This Section specifies general administrative and procedural requirements for warranties and bonds required by the Contract Documents, including manufacturer's standard warranties on products and special warranties.

1.02 RELATED WORK

A. Refer to Conditions of Contract for the general requirements relating to warranties and bonds.

B. General closeout requirements are included in Section 01700 Project Closeout.

C. Specific requirements for warranties for the work and products and installations that are specified to be warranted are included in the individual Sections.

1.03 SUBMITTALS

A. Submit written warranties to the Owner prior to the date fixed by the Engineer for Substantial Completion. If the Certificate of Substantial Completion designates a commencement date for warranties other than the date of Substantial Completion for the work, or a designated portion of the work, submit written warranties upon request of the Owner.

B. When a designated portion of the work is completed and occupied or used by the Owner, by separate agreement with the Contractor during the construction period, submit properly executed warranties to the Owner within 15 days of completion of that designated portion of the Work.

C. When a special warranty is required to be executed by the Contractor, or the Contractor and a subcontractor, supplier or manufacturer, prepare a written document that contains appropriate terms and identification, ready for execution by the required parties. Submit a draft to the Owner for approval prior to final execution.

D. Refer to individual Sections for specific content requirements, and particular requirements for submittal of special warranties.

1.04 WARRANTY REQUIREMENT

A. Related Damages and Losses: When correcting warranted work that has failed, remove and replace other work that has been damaged as a result of such failure or that must be removed and replaced to provide access for correction of warranted work.

B. Reinstatement of Warranty: When work covered by a warranty has failed and been corrected by replacement or rebuilding, reinstate the warranty by written endorsement. The reinstated warranty shall be equal to the original warranty with an equitable adjustment for depreciation.

C. Replacement Cost: Upon determination that work covered by a warranty has failed, replace or rebuild the work to an acceptable condition complying with requirements of Contract Documents. The Contractor is responsible for the cost of replacing or rebuilding defective work regardless of whether the Owner has benefited from use of the work through a portion of its anticipated useful service life.

D. Owner's Recourse: Written warranties made to the Owner are in addition to implied warranties, and shall not limit the duties, obligations, rights and remedies otherwise available under the law, nor shall warranty periods be interpreted as limitations on time in which the Owner can enforce such other duties, obligations, rights, or remedies.

E. Rejection of Warranties: The Owner reserves the right to reject warranties and to limit selections to products with warranties not in conflict with requirements of the contract Documents.

F. The Owner reserves the right to refuse to accept work for the project where a special warranty, certification, or similar commitment is required on such work or part of the work, until evidence is presented that entities required to countersign such commitments are willing to do so.

G. Disclaimers and Limitations: Manufacturer's disclaimers and limitations on product warranties do not relieve the Contractor of the warranty on the work that incorporates the products, nor does it relieve suppliers, manufacturers and subcontractors required to countersign special warranties with the Contractor.

1.05 MANUFACTURERS CERTIFICATIONS

A. Where required, the Contractor shall supply evidence, satisfactory to the Engineer, that the Contractor can obtain manufacturers' certifications as to the Contractor's installation of equipment.

1.06 DEFINITIONS

A. Standard Product Warranties are preprinted written warranties published by individual manufacturers for particular products and are specifically endorsed by the manufacturer to the Owner.

B. Special Warranties are written warranties required by or incorporated in the Contract Documents, either to extend time limits provided by standard warranties or to provide greater rights for the Owner.

PART 2 PRODUCTS (NOT USED)

PART 3 EXECUTION (NOT USED)

END OF SECTION

© 2015 CDM Smith
All Rights Reserved

SECTION 02120
PIPE PREPARATION AND DECHLORINATION/DECHLORAMINATION

PART 1 GENERAL

1.01 SUMMARY

A. This Section Includes:

1. Initial pipe dewatering and dechlorination/dechloramination.

2. Handling of pipe leakage during construction

3. Pipe refilling for testing

1.02 RELATED WORK

A. Submittals are included in Section 01300

B. Dewatering and Drainage is included in Section 02140.

C. Ductile iron pipe and fittings is included in Section 02616.

D. Valves, hydrants and appurtenances are included in Section 02640.

E. Disinfection is included in Sections 01445, 02616 and Section 02640.

1.03 REFERENCES

A. Massachusetts Water Resources Authority (MWRA) Standard Operating Procedures for performing construction work on pipelines.

1.04 SYSTEM DESCRIPTION

A. The Owner utilizes chloramines for disinfection of their treated potable water.

B. The opening and closing of existing valves and hydrants shall be performed by the Owner.

C. The Contractor shall be responsible for the dewatering of all water mains as required to successfully complete the Work.

D. Water discharged into storm drains shall be in accordance with the requirements of all Federal, State and local laws and regulations. Discharge into a sanitary sewer shall only occur with the permission of the Owner.

E. Water main dewatering shall be accomplished through blow-offs, hydrants and other methods proposed by the Contractor and accepted by the Engineer and Owner. The Owner will operate all valves and hydrants. Dewatering will require the Contractor to provide pumping and treatment (i.e., dechlorination/dechloramination) labor and equipment for dewatering. The Contractor is

required to handle leakage of 100 gpm/valve at each isolation valve that is closed or line stop installed to accomplish the work.

F. The Contractor will be required to dewater longer lengths of water mains to perform the work because operable isolation valves may be located beyond the limits of the work areas. The Contractor will be responsible to coordinate with the Owner the location of all valves required to isolate the work areas. The Contractor will be required to handle leakage of 100 gpm/valve at each isolation valve that is closed or line stop that is installed to accomplish the work.

G. The Contractor shall not release any water from existing potable water lines into the surroundings, drainage and sewer systems prior to dechlorination/dechloramination and permission of the Owner. Dechlorination/dechloramination shall be performed in accordance with the procedures outlined below.

H. The pH of all dechlorinated and dechloraminated water discharged shall be reduced to between 6.5 and 8.

1.05 SUBMITTALS

A. Submit in accordance with Section 01300 a Pipe Dewatering Plan and Schedule for Engineer and Owner review. The Plan shall describe how the pipe will be dewatered and the means and methods for disposal of the water drained from the pipeline.

1.06 QUALITY ASSURANCE

A. Prepare a Pipe Dewatering Plan and Schedule for draining the required lengths of water mains prior to start of actual construction on the work for each area. The Plan shall describe how the pipe will be dewatered and the means and methods for disposal of the water drained from the pipeline.

PART 2 PRODUCTS

2.01 MATERIALS

A. Water for pressure and leakage testing may be obtained from the Owner.

B. The Owner utilizes chloramines in its water treatment scheme. Dechlorination/dechloramination of water from the existing distribution system prior to discharge shall be performed. The following types of dechlorinating agents may be used in place of the recommended Sodium Thiosulfate (anhydrous or pentahydrate form) with prior permission of the Engineer.

Sodium bisulfate
Sodium sulfite

Contractor shall notify Engineer of change in chemical used prior to performing any dechlorination.

PART 3 EXECUTION

3.01 APPROACHES TO DECHLORINATION/DECHLORAMINATION

A. Types of Responses – the methods and equipment used to dechlorinate/dechloraminate water released will be dependent on the type of water release. Two types of releases may occur during construction:

1. Planned – Where the location and volume of water to be released are known and can be controlled. Planned release events include water main flushing, hydrant flushing, blow-off valve exercising, or pipeline dewatering.

2. Emergency – Occurs during water main breaks or leaks, the location and volume of the water release are not known. Contractor shall have equipment, chemicals, and supplies needed for dechlorination/dechloramination in the event of an emergency.

3.02 PLANNED RELEASES

A. Dechlorination/Dechloramination Procedures

1. Contractor shall submit in accordance with section 01300, an operations plan that will list the specific steps for the particular discharge and dechlorination/dechloramination. The Contractor will list the receiving water body. Contractor shall estimate the flow rate and chlorine residual, which shall be included in submittal.

2. A solution of sodium thiosulfate will be used for dechlorination/dechloramination.

3. Dosing rate of the solution will depend upon the flow rate and the chlorine residual of the water being discharged.

4. Dosing rates shall be as shown in the Tables in Appendix A of these Specifications.

5. All dechlorination/dechloramination shall be performed by the Contractor in accordance with all AWWA, Federal, State and Local standards and requirements.

3.03 EMERGENCY RESPONSE

A. Reporting – All Contractor personnel shall notify Engineer and Owner when a leak or break has been discovered. It is the responsibility of the Contractor to record all relevant information about the break or leak.

B. Evaluation – If the report is during normal working hours, Contractor shall have Owner crews on route to isolate the break. During off peak hours, the Contractor will contact the Engineer as to the location of the leak or break and he/she will coordinate the shut down of the main.

C. Isolation – The Contractor, after contacting the Engineer and Owner, at the direction of the Engineer and the City, shall begin to isolate the pipeline by closing control valves. The Contractor while on-site, shall be instructed to divert flow of chlorinated or chloraminated water from storm drains or natural water bodies. Contractor shall use sand bags to pool or divert

water. Dechlorination/dechloramination shall be started on the pooled or diverted water as soon as possible.

D. Dechlorination/Dechloramination – In order to dechlorinate/dechloramination the water, a dechlorinating/dechloramination agent needs to be introduced into the discharge flow. Fiber mesh bags with 20 lbs. to 25 lbs. of Anhydrous Sodium Thiosulfate shall be used to dechlorinate/dechloraminate the discharge water. Sand bags shall be used to divert and pool the water. Anhydrous Sodium Thiosulfate can be placed into the pool to achieve the contact time needed. If the Engineer determines that a nearby natural water body may have been impacted by discharge flows, sodium thiosulfate can be spread into the water by hand. Contractor shall monitor the levels of chlorine.

E. Monitoring and Documentation – During dechlorination/dechloramination the contractor shall monitor the levels of chlorine. After setting the dechlorination/dechloramination area the crews should obtain a chlorine reading from the discharge upstream from the dechlorinating/dechloraminating agent. A second reading should be taken downstream from the dechlorinating/dechloraminating agent; both readings shall be recorded by the Contractor and submitted to the Engineer.

END OF SECTION

© 2015 CDM Smith
All Rights Reserved

SECTION 02213
ROCK AND BOULDER EXCAVATION

PART 1 GENERAL

1.01 SCOPE OF WORK

A. Furnish all labor, materials, equipment and incidentals required and excavate and dispose of rock and boulders as shown on the Drawings and as specified herein.

B. Blasting will not be permitted on this project.

C. Contractor shall be aware that during previous work in the vicinity of International Marketplace (intersection of Coggeshall Street and Acushnet Avenue) difficult and slow rock removal conditions were encountered with hoe ramming operations.

1.02 RELATED WORK

A. Submittals are included in Section 01300.

B. Earth excavation and backfilling is included in Section 02221.

C. Granular Materials are included in Section 02230.

D. Sedimentation and Erosion Control is included in Section 02270.

1.03 SUBMITTALS

A. Submit, in accordance with Section 01300, at least two weeks prior to commencing rock and boulder excavation the following:

1. A description of the means and methods of rock and boulder excavation techniques including size and energy of any impact equipment and chemical properties of any chemical agents to be used for chemical splitting.

2. Name and qualifications of the person(s) responsible for monitoring and reporting rock excavation vibrations.

B. Review by the Engineer of material submitted by the Contractor shall not relieve the Contractor of responsibility for the accuracy, adequacy and safety of the rock and boulder excavation, exercising proper supervision and field judgment and producing the results within the limits required by this Section.

1.04 DEFINITIONS

A. Rock: Any large mass of stone or bedrock.

B. Boulder: Rock fragments exceeding 1 cubic yard in volume.

C. The term “Rock Excavation” shall mean the removal of rock which, in the opinion of the Engineer, for its removal requires drilling, wedging, sledging, cutting, barring, jack hammering,

hoe ramming or expansive chemical splitting and which cannot be removed by a tracked excavator with a bucket curling force of at least 18,300 pounds.

D. The term "Boulder Excavation" shall be understood to mean the excavation of boulders exceeding 1 cubic yard in volume which can be excavated without rock excavation methods.

E. Rock fragments less than 1 cubic yard which can be removed without resorting to rock excavation shall be considered as "Soil Excavation".

F. Concrete roadway or concrete roadway base, manholes or structures removals called out to be paid for under other items shall not be considered rock or boulder removal.

PART 2 PRODUCTS (NOT USED)

PART 3 EXECUTION

3.01 GENERAL

A. When rock is encountered, it shall be uncovered, but not excavated, until measurements are made by the Engineer.

3.02 ROCK EXCAVATION

A. Rock excavation may be performed by drilling, wedging, sledging, cutting, barring, jack hammering, hoe ramming, expansive chemical splitting, or other similar process in a manner, which does not cause damage to the existing structures or new construction.

B. Blasting is not allowed.

C. All rock excavation operations shall comply with the project, state and local noise and dust regulations and vibration limits. Material shall not be stored within the roadway or city right-of-way.

D. If rock below grade is shattered by rock excavation methods, and if, in the opinion of the Engineer, the shattered rock is unfit for subgrade, the rock shall be removed and the excavation refilled with thoroughly compacted screened gravel or structural fill at no additional cost.

3.03 BOULDER EXCAVATION

A. Boulders and rock fragments up to 1 cubic yard in volume may be reduced in size by rock excavation methods to simplify its removal.

3.04 DISPOSAL OF ROCK AND BOULDERS

A. Fragmented rock with dimensions not exceeding 6-in in any direction may be mixed with common fill and used as common fill in accordance with Section 02230.

B. Rock and boulders may be crushed and screened for reuse in the work, provided that the resultant materials meet the requirements for pervious fill, screened gravel, or structural fill as specified in Section 02230.

C. Excavated material shall be stacked without excessive surcharge on the excavation or obstructing free access to hydrants and gate valves. Inconvenience to traffic and abutters shall be avoided as much as possible.

D. Should conditions make it impracticable or unsafe to stack material adjacent to the excavation, the material shall be hauled and stored at a location provided. When required, it shall be re-handled and used in backfilling the trench at no additional cost to the Owner.

E. Unused rock and boulders shall be removed and disposed of off-site.

END OF SECTION

© 2015 CDM Smith
All Rights Reserved

SECTION 02221
TRENCHING, EXCAVATION, BACKFILLING AND COMPACTION

PART 1 GENERAL

1.01 SCOPE OF WORK

A. Furnish all labor, materials, equipment and incidentals required and perform all trenching for pipelines and appurtenances, including drainage, filling, backfilling, disposal of surplus material and restoration of trench surfaces and easements.

B. Excavation shall extend to the width and depth shown on the Drawings or as specified herein and shall provide suitable room for installing pipe, structures and appurtenances for work within City streets. Work within MassDOT roads shall be governed by the Massachusetts Highway Department Standard Specifications for Highways and Bridges dated 1988, as amended, and the supplemental specifications dated June 15, 2012.

C. Furnish and place all sheeting, bracing and supports and shall remove from the excavation all materials which the Engineer may deem unsuitable for backfilling. The bottom of the excavation shall be firm, dry and in all respects, acceptable. If conditions warrant, deposit gravel for pipe bedding, or gravel refill for excavation below grade, directly on the bottom of the trench immediately after excavation has reached the proper depth and before the bottom of the trench has become softened or disturbed by any cause whatever. The length of open trench shall be related closely to the rate of pipe laying. All excavation shall be made in open trenches.

D. All excavation, trenching and related sheeting, bracing, etc., shall comply with the requirements of OSHA excavation safety standards (29 CFR Part 1926.650 Subpart P) and to the Massachusetts Department of Labor and Industries, Division of Industrial Safety "Rules and Regulations for the Prevention of Accidents in Construction Operations" (Chapter 454 CMR 10.00 et. seq.), and State requirements including but not limited to Massachusetts General Law Chapter 82A and State requirements. Where conflict between OSHA and State regulations exists, the more stringent requirements shall apply.

E. Wherever the requirement for percent compaction is referred to herein it shall mean "the minimum percent of maximum density as determined by ASTM D1557, Method D". If no minimum compaction density is listed, 92 percent shall be required as the minimum.

F. Furnish all labor, materials, equipment, supervision and incidentals necessary to perform all survey monitoring required to complete the Work shown on the Drawings and specified herein. The Work shall include, but not necessarily limited to, installation and survey monitoring points on structures and utilities and reporting movements in accordance with the Drawings and Specifications. All survey work shall be performed by a registered Professional Land Surveyor in the Commonwealth of Massachusetts.

G. Prior to the start of work submit the proposed method of backfilling and compaction to the Engineer for review.

1.02 RELATED WORK

A. Dewatering is included in Section 02140.

B. Rock and boulder excavation is included in Section 02213.

C. Granular fill material is included in Section 02230.

D. Support of Excavation is included in Section 02325.

E. Pavement repair and resurfacing is included in Section 02576.

F. Loaming and seeding is included in Section 02930.

1.03 SOIL TESTING

A. The Engineer or Owner shall select areas within the limits of the compacted backfill material for testing the degree of compaction obtained. In general test location shall be along the mainline pipe and service connections approximately every 100 feet as determined by the Engineer or Owner and test depths shall be approximately 2-3 feet below grade and at mid-depth of the trench, or other depths as selected by the Engineer or Owner.

B. The Contractor is responsible for paying all costs associated with soils testing. The following tests and number of each shall be performed by an independent testing laboratory:

1. Sieve analysis – Total of 50 tests

2. Modified Compaction Test (ASTM D1557 Standard 56,000 lbs) – Total of 50 tests

C. If test results are unsatisfactory, all costs involved in correcting deficiencies in compacted materials to the satisfaction of the Engineer or Owner, including all subsequent tests, shall be borne by the Contractor.

D. The Contractor is responsible for excavation and backfill during the Nuclear Density Test, and any other tests as required.

1.04 SUBMITTALS

A. Submit, in accordance with Section 01300, the following and as elsewhere specified in this Section:

1. The proposed methods of construction, including excavation, excavation support systems designs, dewatering, backfilling and filling and compaction for the various portions of the Work.

2. Dewatering and drainage system designs shall be prepared as specified in Section 02140.

3. Compaction test documentation of backfill materials under structures, pipelines and pavements shall be provided to the Engineer.

4. Excavation support system design shall be prepared as specified in Section 02325.

5. A plan of settlement monitoring points established on existing structures and utilities shall be prepared by a Professional Land Surveyor (PLS) or Professional Engineer (PE) registered in the Commonwealth of Massachusetts, experienced and skilled in construction survey required under this Contract, and acceptable to the Engineer and Owner. Submit a copy of the registered professional land surveyor's certification form to show compliance with this requirement. The Contractor's PLS shall survey the elevation of each settlement monitoring point as described herein. Within 24 hours of each survey, the PLS shall submit to the Engineer the latest survey elevations and coordinates at each monitoring point along with all previous survey elevations.

1.05 REFERENCE STANDARDS

A. American Society for Testing and Materials (ASTM)

1. ASTM C33 – Standard Specification for Concrete Aggregates

2. ASTM D1557 – Test Method for Laboratory Compaction Characteristics of Soil Using Modified Effort

3. ASTM D422- Test Method for Particle Size Analysis of Soils

4. ASTM D2922- Density of Soil in Place by Nuclear Methods (Shallow Depth)

5. ASTM D3017 – Standard Test Method for Water Content of Soil in Place by Nuclear Methods (Shallow Depth)

B. MassDOT Standard Specifications for Highways and Bridges (MSSHB), latest edition, all addenda.

C. Where reference is made to one of the above standards, the revision in effect at the time of bid opening shall apply.

1.06 PROTECTION

A. All existing facilities which include but is not limited to structures, utilities, pavements, sidewalks, curbing, driveway aprons, fencing, landscaping and other improvements in the vicinity of the Contractor's operations shall be adequately protected. If necessary, curbing, driveway aprons and fencing shall be removed and restored or replaced after backfilling. All existing facilities damaged by the construction shall be replaced with material fully equal to that existing prior to construction to the satisfaction of the Owner and Massachusetts Department of Transportation, Highway Division (Route 18).

B. Furnish, install, monitor and maintain excavation support as required and as specified in Section 02325 – Support of Excavation.

C. Furnish, install, monitor and maintain settlement monitoring as required and as specified in Paragraph 3.09 of this Section.

D. Furnish, install, monitor and maintain dewatering and drainage systems as required and as specified in Section 02140.

1.07 QUALITY ASSURANCE

A. Regulations: Perform all work in accordance with current application regulations and codes of all Federal, State and local agencies.

B. The Contractor shall have at least five (5) years experience with comparable work to the Work shown and specified, employing labor and supervisory personnel who are similarly experienced in this type of work.

C. The Contractor's engineer shall be a Professional Engineer, registered in the Commonwealth of Massachusetts, and shall have at least five (5) years experience in the design and construction of excavation support systems.

D. The Contractor's surveyor shall be a Professional Land Surveyor or Professional Engineer, registered in the Commonwealth of Massachusetts and shall have at least five (5) years experience in construction survey of the type required under this Contract and acceptable to the Engineer and Owner.

E. Prior to and during the placement of backfill and fill, coordinate with the Engineer to perform in-place density tests to verify that the backfill/fill material has been compacted in accordance with the compaction requirements specified elsewhere. The Engineer may designate areas to be tested.

PART 2 PRODUCTS

2.01 Materials

A. Granular materials designated for use in this Section are specified in Section 02230.

B. Filter fabric shall be non-woven geotextiles, Mirafi 140N or approved equal.

C. All materials for excavation support designated for use in this section are as specified in Section 02325.

PART 3 EXECUTION

3.01 TRENCH EXCAVATION

A. Trench excavation shall include material of every description and of whatever substance encountered, except rock and boulders. Pavement shall be cut with a saw, wheel or pneumatic chisel along straight lines before excavating.

B. Strip and stockpile topsoil from grassed areas crossed by trenches. At the Contractor's option, topsoil may be otherwise disposed of and replaced, when required, with approved topsoil of equal quality.

C. While excavating and backfilling is in progress, traffic shall be maintained, and all utilities and other property protected as provided in the General Conditions and General Requirements.

D. Trenches shall be excavated to the depth indicated on the Drawings and in widths sufficient for laying the pipe, bracing and for pumping and drainage facilities. The bottom of the excavations shall be firm and dry and in all respects acceptable to the Engineer. Trench width shall be practical minimum. Work within MassDOT roads shall be governed by the Massachusetts Highway Department Standard Specifications for Highways and Bridges dated 1988, as amended, and the supplemental specifications dated June 15, 2012.

E. Existing fills and organic soils shall be over excavated to the naturally deposited, undisturbed inorganic soil below pipelines as shown on the Drawings or as directed by the Engineer, and be replaced with compacted structural fill, screened gravel or other materials approved by the Engineer.

F. Excavation and dewatering shall be accomplished by methods which preserve the undisturbed state of subgrade soils. The trench may be excavated by machinery to, or just below the designated subgrade, provided that material remaining in the bottom of the trench is no more than slightly disturbed. Subgrade soils which become soft, loose, "quick", or otherwise unsatisfactory as a result of inadequate excavation, dewatering or other construction methods shall be removed and replaced by screened gravel fill as required by the Engineer at the Contractor's expense.

G. Clay and organic silt soils are particularly susceptible to disturbance due to construction operations. When excavation is to end in such soils, use a smooth-edge bucket to excavate the last 1-ft of depth. No excavation shall end in organic silts or peat.

H. Rock shall be removed to a minimum of 8-inch clearance around the bottom and sides of all pipes being laid. Rock and boulder excavation shall be made in accordance with Section 02213.

I. Where pipe is to be laid in screened gravel bedding, the trench may be excavated by machinery to the normal depth of the pipe provided that the material remaining in the bottom of the trench is no more than slightly disturbed.

J. Where pipe is to be laid directly on the trench bottom, final excavation at the bottom of the trench shall be performed manually, providing a flat-bottom true to grade upon undisturbed material. Bell holes shall be made as required.

K. If the Contractor excavates below grade through error or for the Contractor's own convenience, or through failure to properly dewater the trench, or disturbs the subgrade before dewatering is sufficiently complete, he may be directed by the Engineer to excavate below grade as set forth in the following paragraph, in which case the work of excavating below grade and furnishing and placing the refill shall be performed at his own expense.

L. If the material at the level of trench bottom consists of fine sand, sand and silt or soft earth which may work into the screened gravel notwithstanding effective drainage, the subgrade material shall be removed to the extent directed by the Engineer a geotextile filter fabric, Mirafi 140N or equal, shall be placed. Screened gravel shall then be placed in 6-in layers thoroughly compacted up to the normal grade of the pipe.

M. Geotextile filter fabric, Mirafi 140N or equivalent shall be placed where shown on the Drawings and/or specified by the Engineer as follows:

1. The filter fabric shall be unrolled and placed onto the prepared trench bottom as shown on the Drawings. The fabric shall be carried up the trench sidewall to the top of the pipe bedding.

2. Filter fabric shall be unrolled and placed on the prepared subgrade beneath structures and manholes on pipelines requiring use of filter fabric. Fabric shall extend 6 in. beyond the structure and manhole foundations.

3. Where more than one section of fabric is required, the fabric shall be overlapped no less than 12 in. to assure the continuity of the filter.

4. The subgrade shall be inspected and acceptable to the Engineer prior to the installation of the filter fabric. The subgrade shall be maintained in a smooth, uniform, and compacted condition during the installation of the filter fabric. No mechanical equipment shall be driven directly on top of the filter fabric unless permitted by the Engineer. The fabric shall be stored in such a way that it is protected from prolonged exposure to ultraviolet radiation.

5. If the fabric is damaged during installation it shall be immediately repaired. All gravel shall be removed from the affected area and a patch of fabric large enough to cover the damage plus an 18 inch overlap shall be placed on top of the damaged section.

3.02 STRUCTURE EXCAVATION PROCEDURES

A. Excavations for structures shall be suitably wide for construction of structures, including excavation supports, dewatering and drainage systems and working clearances.

B. Excavation shall be performed in the dry and shall be accomplished by methods which preserve the undisturbed state of subgrade soils. Drainage and dewatering system shall be in place and the groundwater predrained to at least 2 feet below the lowest level of the excavation prior to beginning excavation work.

C. In no case shall the earth be plowed, scraped, or excavated by any means so near to the finished subgrade that would disturb the finished subgrade. Hand excavation or use of a smooth-edge bucket for the final 3 to 6-inches may be required to obtain a satisfactory, undisturbed subgrade. Subgrade soils which become soft, loose, “quick”, or otherwise unsatisfactory for support of structures as a result of inadequate excavation, dewatering, or other construction methods shall be removed and replaced with lean concrete, compacted structural fill, screened gravel or crushed stone, subject to prior approval by the Engineer, at no additional cost to the Owner.

D. Subgrade Preparation

1. Compact the top 12-in of subgrade to a minimum of 95 percent modified Proctor (ASTM D1557).

2. Where the subgrade consists of existing fill, existing utilities, over blasted rock or organic soils, the unsuitable material shall be removed down to naturally deposited in organic soils or competent bedrock as shown on the Drawings or as directed by the Engineer and be replaced compacted structural fill, screened gravel, lean concrete, controlled low strength material (CLSM) or other suitable material as directed by the Engineer. Prior to placing the

working mat, compact the top 12-in of existing subgrade to a minimum of 95 percent modified proctor (ASTM D1557).

3. Where the subgrade consists of fine sands or silts below the natural groundwater level, remove all disturbed soils with a smooth-edge bucket or by hand down to a firm and stable soils and immediately place a filter fabric, Mirafi 140N, or equivalent then place and compact the bedding material.

4. Rock shall be removed to a minimum of 12-in clearance around the bottom and sides of all foundations. Rock and boulder excavation shall be made in accordance with Section 02213.

E. When excavations have reached the required subgrade, including any allowances for working mats or base materials, prior to the placement of working mats or base materials, notify the soils testing laboratory to verify the suitability of the existing subgrade soils for the anticipated foundation and structural loadings. If the existing subgrade soils are determined to be unsuitable, direction will be provided by the Engineer regarding removal and replacement with suitable materials. If Contractor believes that such direction would increase Contractor's cost and would thereby entitle Contractor to a change in Contract cost, Contractor shall notify the Engineer in accordance with the applicable article(s) in the General Conditions pertaining to changes in the work.

F. Over-excavation beyond the limits and depths required by the Contract Documents shall be replaced at no additional cost to the Owner by lean concrete, structural fill, bedding rock, or other approved material subject to the prior approval of the Engineer.

3.03 DISPOSAL OF MATERIALS

A. Excavated material shall be stacked without excessive surcharge on the trench bank or obstructing free access to hydrants and gate valves. Inconvenience to traffic and abutters shall be avoided as much as possible. Excavated material shall be segregated for use in backfilling as specified below.

B. It is expressly understood that no excavated material shall be removed from the site of the work or disposed of, except as directed by the Engineer. When removal of surplus materials has been approved by the Engineer, dispose of such surplus material in approved designated areas.

C. Should conditions make it impracticable or unsafe to stack material adjacent to the trench, the material shall be hauled and stored at a location provided. When required, it shall be re-handled and used in backfilling the trench.

D. Refer to Sections 01570 and 01046 for additional requirements regarding storage of materials within the project limits.

E. All excess surplus material shall become property of the Contractor.

F. Contaminated material shall be managed and disposed of in accordance with Sections 02280 and 02282.

3.04 EXCAVATION SUPPORT

A. Design, furnish, install, monitor and maintain trench support systems including sheeting and bracing required by Federal, State and Local safety requirements to support the sides of the excavation and prevent loss of ground which could endanger personnel, damage or delay the work, damage adjacent structures, and utilities and protect the trench bottom as specified in Section 02325.

3.05 TEST PITS

A. Excavation of test pits may be required for the purpose of locating underground utilities or structures as an aid in establishing the precise location of new work.

B. Test pits shall be backfilled in compacted lifts as soon as the desired information has been obtained. The backfilled surface shall be maintained in a satisfactory condition for travel until resurfaced as specified.

3.06 EXCAVATION BELOW GRADE AND REFILL

A. Whatever the nature of unstable material encountered or the groundwater conditions, trench drainage shall be complete and effective.

B. If the Contractor excavates below grade through error or for the Contractor's own convenience, or through failure to properly dewater the trench, or disturbs the subgrade before dewatering is sufficiently complete, he may be directed by the Engineer to excavate below grade as set forth in the following paragraph, in which case the work of excavating below grade and furnishing and placing the refill shall be performed at his own expense and at no additional cost to the Owner.

C. When excavations have reached the required subgrade including any allowance for working mats or base materials, prior to the placement of working mats or base materials, notify the Engineer to verify the suitability of the existing subgrade soils for the anticipated foundation and structural loadings. If the existing subgrade soils are determined to be unsuitable, direction will be provided by the Engineer regarding removal and replacement with suitable materials. If Contractor believes that such direction would increase Contractor’s cost and would thereby entitle the Contractor to a change in Contract price, Contractor shall notify the Engineer in accordance with the applicable article(s) in the General Conditions pertaining to changes in the work.

3.07 BACKFILLING

A. As soon as practicable after the pipe has been laid and jointed, backfilling shall begin and thereafter be prosecuted expeditiously. Bedding gravel, as specified for the type of pipe installed, shall be placed up to 1-ft over the pipe. Where indicated on the Drawings or specified herein backfill trench with CLSM.

B. An impervious dam or bulkhead cutoff of clay or other impervious material shall be constructed in the trench as directed, to interrupt the unnatural flow of groundwater after construction is completed. The dam shall be effectively keyed into the trench bottom and sidewalls. Provide at least one clay or other impervious material dam in the pipe bedding between each manhole where directed or every 300-ft, whichever is less.

C. Where the pipes are laid cross-country, the remainder of the trench shall be filled with common fill material or non-organic trench excavate as approved by the Engineer in layers not to exceed 1-ft and mounded 6-in above the existing grade or as directed. Where a loam or gravel surface exists prior to cross-country excavations, it shall be removed, conserved and replaced to the full original depth as part of the work under the pipe items. In some areas it may be necessary to remove excess material during the clean-up process, so that the ground may be restored to its original level and condition.

D. Where the pipes are laid in streets, the remainder of the trench up to a depth of 12-in below the bottom of the specified permanent paving shall be backfilled with common fill material in layers not to exceed 1-ft and thoroughly compacted to a minimum of 95 percent compaction as determined by ASTM D 1557 unless otherwise specified. The subbase layer for paving shall be of gravel borrow thoroughly compacted in 6-in layers to a minimum of 95-percent as determined by ASTM D 1557. Trenches within MassDOT SHLO shall be backfilled with Type 2E Controlled Density Fill (CDF-M4.08.0) to 7-in below the finished grade of the roadway surface.

E. When the pipes are laid in roadways under the jurisdiction of the Massachusetts Highway Department (i.e. Route 18), the remainder of the trench up to a depth of 7-in below the bottom of the specified permanent paving shall be backfilled with CLSM. Contractor shall allow CLSM to set completely prior to placing roadway pavement.

F. To prevent longitudinal movement of the pipe, dumping backfill material into the trench and then spreading will not be permitted until selected material or screened gravel has been placed and compacted to a level 1-ft over the pipe.

G. Backfill shall be brought up evenly on all sides. Each layer of backfill material shall be thoroughly compacted by rolling, tamping, or vibrating with mechanical compacting equipment or hand tamping, to 95 percent compaction as determined by ASTM D 1557 in lifts not exceeding 12-in unless otherwise indicated on the Drawings, specified herein or directed by the Engineer. If rolling is employed, it shall be by use of a suitable roller or tractor, being careful to compact the fill throughout the full width of the trench. If select common fill is used, it shall be placed in lifts not exceeding 8-in and compacted to a minimum of 95 percent.

H. Where other methods are not practicable, compaction shall be by use of hand or pneumatic ramming with tools weighing at least 20 lbs. The material being spread and compacted in layers not over 6-in thick. If necessary, sprinkling shall be employed in conjunction with rolling or ramming.

I. Backfill required beneath foundations or slabs on grade shall be structural fill. Structural fill shall be placed and compacted in lifts with a maximum thickness of 8-in. Lift thickness shall be reduced to a maximum of 4-in where hand operated vibratory equipment is used. Thickness of compacted structural fill shall be as shown on the Drawings, but in no case less than 12-in. Compact structural fill to a minimum of 95 percent or near its optimum moisture content (minus 2 to 3 plus percent) as determined by ASTM D 1557.

J. Backfill around structures shall be structural fill or selected common fill material, and shall be compacted with approved compaction equipment. All backfill shall be compacted, especially under and over pipes connected to the structures.

K. Fill and backfill shall not be placed and compacted when the materials are too wet to property compact (i.e. the in-place moisture content of the soils at the time is more than three percentage points above the optimum moisture content of that soil as determined by ASTM D 1557).

L. Fill and backfill shall not be placed over frozen surfaces or one covered by snow, or ice nor shall snow, ice or frozen earth be incorporated into the compacted fill.

M. Subject to the approval of the Engineer, fragments of ledge and boulders smaller than 6-in may be used in trench backfill providing that the quantity in the opinion of the Engineer is not excessive. Rock fragments shall not be placed until the pipe has at least 2-ft of earth cover. Small stones and rocks shall be placed in thin layers alternating with earth to ensure that all voids are completely filled. Fill shall not be dropped into the trench in a manner to endanger the pipe.

N. Bituminous paving shall not be placed in backfilling unless specifically permitted, in which case it shall be broken up as directed. Frozen material shall not be used under any circumstances.

O. All road surfaces shall be broomed and hose-cleaned immediately after backfilling. Dust control measures shall be employed at all times.

P. Where required on the Plans, controlled low strength material (CLSM), shall be used as required or directed.

Q. At the completion of each day's work, the trench shall be fully backfilled and compacted. With permission from the Engineer the Contractor will be allowed to plate the trench and shall install lighted barrels with cones to advise vehicles of the plating.

3.08 RESTORING TRENCH SURFACE

A. Where the trench occurs adjacent to paved streets, in shoulders, sidewalks, or in cross-country areas, thoroughly consolidate the backfill and shall maintain the surface as the work progresses. If settlement takes place, immediately deposit additional fill to restore the level of the ground.

B. CLSM shall be used where indicated on the Drawings. Exercise caution when excavating adjacent to existing foundations. Prior records indicate that foundations are constructed of field stone and mortar and are susceptible to damage when working adjacent to. Any damage caused during the excavation to foundations shall be repaired at no additional cost to the Owner.

C. In and adjacent to streets, the 12-in layer of trench backfill below the specified initial pavement shall consist of compacted gravel borrow. Should the Contractor wish to use material excavated from the trench as gravel subbase for pavement replacement, the Contractor, at his/her own expense, have samples of the material tested by an independent testing laboratory at intervals not to exceed 500-ft, in order to establish its compliance with the specifications. Only material which has been tested and approved by the Engineer shall be allowed to be incorporated into the work.

D. The surface of any driveway or any other area which is disturbed by the trench excavation and which is not a part of the paved road shall be restored to a condition at least equal to that existing before work began.

E. In sections where the pipeline passes through grassed areas, and at the Contractor's own expense, remove and replace the sod, or loam and seed the surface to the satisfaction of the Engineer.

3.09 SETTLEMENT MONITORING

A. Settlement monitoring points shall be installed on all structures and utilities where excavations are within the specified zone of influence of an adjacent structure or utility or as directed by the Engineer. The zone of influence of a structure or utility is a zone defined by a line drawn outward and downward along a one horizontal to one vertical slope from the bottom outer edge of the adjacent structure foundation or from the springline of an existing utility.

B. Settlement monitoring of existing structures and utilities shall be performed using a combination of Surface Monitoring Points and Deformation Monitoring Points as described herein. All other monitoring points shall be installed on existing structures and utilities at a spacing of not more than 50 feet along the length of the utility or outside face of the structure and specified otherwise. The Contractor shall submit a plan of the proposed settlement monitoring points for approval by the Engineer.

C. Surface Monitoring Points (SMP)

1. SMP shall consist of inscribed markings or approved surveyor's nail driven flush with surface installed into existing concrete, masonry or asphalt directly over the centerline of the underground utility.

D. Deformation Monitoring Points (DMP)

1. DMP shall consist of fixed markers placed on existing utilities and structures to record vertical movements. The initial vertical controls shall be determined by optical survey methods. DMPs shall consist of nails, screws, reinforcing bars, bolts and similar materials with well-defined measurement points as approved by the Engineer.

2. DMPs shall be firmly attached and shall be protected from damage and vandalism. Remove or cover with a protective box or cap as approved by the Engineer all elements of DMPs protruding more than 0.25-inches.

E. Clearly indentify all monitoring points with permanent easily readable letters and numbers in the field as approved by the Engineer.

F. Initial Readings: Immediately following monitoring point installation, the Contractor shall take two sets of initial readings to provide baseline readings and to demonstrate the adequacy of the completed installation.

G. At a minimum, daily monitoring shall be required for all SMP and DMP within 50 feet of active work and at least once per week until the work is complete. Within 24 hours of each survey, submit to the Engineer the latest survey elevations and coordinates at each monitoring point along with all previous survey information.

H. Tolerances

1. Survey measurements for initial location of each of the monitoring points shall consist of determining the elevation with respect to benchmark(s) approved by the Engineer.

2. Elevations of Surface and Deformation Monitoring Points shall be determined to an accuracy of plus/minus 0.01 feet.

I. The maximum allowable cumulative vertical movement measured at SMPs or DMPs shall be no more than 0.5 inch at structures and 1 inch at utilities. The maximum allowable cumulative vertical movement measured at SMPs installed over pipe jacking operations shall be no more than 0.5 inch. If the movements exceed these criteria, the Contactor shall stop all related construction activities, stabilize the excavation and revise the construction activities to prevent additional movement. These criteria may be adjusted by the Engineer based on the actual conditions.

END OF SECTION

Viera, Lauren C.

From:	Rolandi, Massimiliano
Sent:	Thursday, January 22, 2015 2:30 PM
To:	Syde, Shawn; Norton, Roger; Viera, Lauren C.
Cc:	Murtagh, Kathleen; Dunn, Tyler; Bedigian, Paul
Subject:	Subsurface Conditions and Geotechnical Engineering Recommendations - Mitchell Street and Sawyer Street CIP Underground Connection Structure - New Bedford Massachusetts
Attachments:	B-DS-4.pdf

Hi Shawn,

This email briefly summarizes subsurface conditions and provides geotechnical engineering recommendations for the proposed cast-in-place underground connection structure located at the intersection of Mitchell Street and Sawyer Street, in the City of New Bedford, Massachusetts.

Existing and Proposed Site Conditions

The project site is located at the intersection of Mitchell Street and Sawyer Street in a primarily residential and commercial neighborhood New Bedford, Massachusetts. The project site contains an existing network of utilities, including but not limited to:

- One 72-inch diameter double course brick drain located along Sawyer street;
- One 12-inch diameter drain located along the Sawyer Street;
- One 8-inch diameter water main located along the Sawyer Street;
- One 10-inch diameter sewer pipe located along Sawyer Street;
- One gas main of unknown diameter located along Sawyer Street.
- A 6-inch diameter water main and a 10-inch drain located along Mitchell Street.

The project site is relatively flat with grades elevations ranging from approximately EL. 7.8 to El. 8.8 along Mitchell Street and El. 7.7 to El. 8.0 along Sawyer Street. Elevations noted herein are in feet and are referenced to the National American Vertical Datum of 1988 (NAVD 88).

The proposed construction for the Mitchell Street and Sawyer Street work includes installing an underground connection structure at the intersection of Mitchell Street and Sawyer Street. The proposed structure will connect a proposed 48” Reinforced Concrete (RC) drain to be installed along Mitchell Street to an existing 72-inch double course brick drain located along Sawyer street. The bottom of the proposed structure is approximately El.-4.

Removal and replacement, relocation and abandonment of several existing underground utilities along Sawyer Street is also included in the work.

Subsurface Exploration Program

The drilling program consisted of one (1) test borings, B-DS-4-1 drilled by Soil Exploration Corporation of Leominster, Massachusetts. The test boring was drilled using a truck-mounted drill rig on April 8, 2005. The test boring was drilled

using 4 1/4–inch inside diameter (I.D.) hollow stem augers. The test boring was drilled to a depths of 22 feet below ground surface (ft bgs). Split spoon sampling was typically conducted at standard 5-feet intervals in soils from ground surface to a depth of 22 ft bgs in accordance with ASTM D1586 (using a 2-inch O.D. sampler, driving 24 inches by blows from a 140-pound hammer falling freely for a height of 30-inches). The number of blows required to drive the sampler each 6-inch increment was recorded and the Standard Penetration Resistance (N-value) was determined as the sum of the blows over the middle 12-inches of penetration. Groundwater level inside the boring was measured at the end of the exploration at a depth of 8 ft bgs.

The test boring log for B-DS-4-1 is attached to this email.

Subsurface Soil Conditions and Groundwater Conditions During Drilling

The subsurface conditions encountered at the intersection of Mitchell Street and Sawyer Street in New Bedford, Massachusetts, typically consisted of Sand and Gravel underlain by Sand and Silt.

A Sand and Gravel layer was encountered underlying 4 inches of asphalt at the exploration location. The sand and gravel layer was 9.75 feet thick at the exploration location and generally consisted of medium dense, fine to coarse SAND, some to little amounts of fine to coarse gravel, some to little amounts of silt. SPT N-values ranged from 11 to 13 Blows per foot (bl/ft).

A Sand and Silt layer was encountered underlying the Sand and Gravel layer at the exploration location. The sand and silt layer was not fully penetrated. The penetrated thickness of the sand and silt layer was 12 feet thick at the exploration location and generally consisted of loose to medium dense, fine SAND and SILT. SPT N-values ranged from 10 to 14 bl/ft.

Groundwater was encountered at the time of drilling in exploration B-DS-4-1 and was measured at a depth of 8 ft bgs.

Expected Variations in Subsurface Conditions

Interpretation of general subsurface conditions presented herein is based on soil and groundwater conditions observed at the test boring location conducted for this study. However, subsurface conditions may vary between exploration locations. If conditions are found to be different from what is indicated herein, interpretations contained herein should be re-evaluated by CDM Smith and confirmed in writing. Groundwater levels can be expected to change with time, season, temperature, and construction activities in the area, as well as with other factors. Therefore, groundwater conditions at the time of construction may be different from those found during the exploration program.

Geotechnical Design Recommendations

Geotechnical engineering evaluations and recommendations have been made as they relate to the proposed Mitchell Street and Sawyer Street underground connection structure located in New Bedford, Massachusetts. In general, these evaluations have been made and criteria established based on the result of subsurface investigation and geotechnical laboratory testing programs conducted for this study, and published correlations with soil properties and the minimum requirements of the 2009 Massachusetts Building Code and subsequent amendments (the Code). In addition, recommended design criteria are based on performance tolerances, such as allowable settlement, as understood to relate to similar structures.

Structure Foundations

The proposed underground connection structure should be supported on mat foundation bearing on suitable soil or on structural fill placed after the removal of unsuitable soils. A minimum 12 inches thick structural fill layer should be placed underneath the structure foundation. The proposed underground connection structure may be designed for a maximum bearing pressure of 1 ton per sq. ft. (tsf), provided it bears on suitable soil, or structural fill placed after the removal of unsuitable soils.

The structural fill should extend at least 2 ft. beyond the edge of the foundation, then outward and downward at a slope of one horizontal to one vertical (1H:1V) to the lowest subgrade elevation. Structural fill should be compacted to at least 95% of its maximum dry density as determined by ASTM D1557.

Suitable soils include naturally deposited medium dense Sand and Gravel or medium dense Sand and Silt. Unsuitable soils include any other soft, loose or disturbed soil present at the foundation subgrade level.

Settlement of the proposed structures at both locations, designed as recommended herein, is expected to be 1 inch with no more than 1/2 inch of differential settlement.

Earthquake Considerations

Based on the Section 1613.5 of the Code the site should be considered as Site Class "D". Therefore, the spectral accelerations should be modified for Site Class D when determining the design earthquake response accelerations and seismic design category for the seismic analysis at the site. Based on the subsurface investigation, the soils encountered below the proposed structure foundations at the site is not considered to be susceptible to liquefaction.

Design Groundwater Elevation

For the purpose of design, groundwater elevation should be assumed at finished ground surface at the Mitchell Street and Sawyer Street intersection locations.

Resistance to Buoyancy

Based on the site groundwater conditions, the bottom slab of the proposed underground connection structure will be approximately 12 feet below the design groundwater elevation. The structures should be designed to resist hydrostatic pressures from the design groundwater level referenced above using the dead weight of the structure plus weight for earth placed directly over extension to the structure foundations. For purposes of design against uplift, the soil used as backfill should be assumed to have a total unit weight, in place, of 120 pounds per cubic foot (pcf).

Lateral Pressure on Below-Grade Walls

Below-grade walls that are backfilled on one side and restrained against rotation or movement at the top, should be designed for lateral pressures from soil and groundwater based on an equivalent fluid unit weight of 60 pcf above the design groundwater level and 90 pcf below the design groundwater level.

A lateral pressure equal to 0.5 times the surface vertical surcharge loads from building foundations, slabs or other loads should be applied over the full height of all walls. Earthquake induced pressures in accordance with the Code should be included in the design of all below grade walls.

Closing

These interpretations of subsurface conditions have been prepared for the Mitchell Street and Sawyer Street intersection cast in place underground connection structure located in New Bedford, Massachusetts as understood at this time and described in this email. These recommendations have been prepared in accordance with generally accepted engineering practices. No other warranty, express or implied, is made. In the event that changes in the design or location of the structure occur, the conclusions and recommendations contained herein should not be considered valid unless verified in writing by CDM Smith.

TEST BORING LOG SHEET

Soil Exploration Corp. Geotechnical Drilling Groundwater Monitor Well 148 Pioneer Drive Leominster, MA 01453 978 840-0391	**Camp Dresser & McKee, Inc.** **Site: Sewer Separation Project** **New Bedford, MA**	BORING B-DS-4-1 PROJECT NO. 05-0339 DATE: April 15, 2005

Ground Elevation:
Date Started: April 8, 2005
Date Finished: April 8, 2005
Driller: TF
Soil Engineer/Geologist:

GROUNDWATER OBSERVATIONS

DATE	DEPTH	CASING	STABILIZATION

Depth Ft.	Casing bl/ft	Sample No.	Pen/Rec	Sample Depth	Blows/6"	Strata	Visual Identification of Soil and / or Rock Sample
						0'4"	Asphalt – 0'4"
1		1		0'6"-2'6"	7-5-7-10		Dry, medium dense, fine to medium sand, some fine to coarse gravel, some coarse sand and inorganic silt.
		2		2'6"-4'6"	4-4-7-5	2'6"	Dry to wet, medium dense, fine sand, some medium to coarse sand, little fine gravel, little inorganic silt.
5		3		5'0"-7'0"	5-7-6-8		
10		4		10'0"-12'0"	6-6-8-9	10'0"	Wet, medium dense, fine sand and inorganic silt.
15		5		15'0"-17'0"	4-6-6-7		
20		6		20'0"-22'0"	3-5-5-6		
						22'0"	End of boring at 22'0" with hollow stem auger. Water level at 8'0 upon completion.
25							
30							
35							
39							

Notes: Hollow Stem Auger Size - 4-1/4"

Cohesionless: 0 - 4 V. Loose, 4 - 10 Loose,	Trace	0 to 10%		CASING	SAMPLE	CORE TYPE
10 -30 M Dense, 30 -50 Dense, 50+ V Dense.	Little	10 to 20%	ID SIZE (IN)		S/S	
Cohesive: 0 -2 V Soft, 2 -4 Soft, 4 -8 M Stiff	Some	20 to 35%	HAMMER WGT (LB)		140 Lb.	
8 -15 Stiff, 15 -30 V. Stiff, 30 + Hard.	And	35% to 50%	HAMMER FALL (IN)		30"	

© 2015 CDM Smith
All Rights Reserved

SECTION 02230
GRANULAR FILL MATERIALS

PART 1 GENERAL

1.01 DESCRIPTION

A. Granular fill materials are specified in this Section, but their use for bedding pipe, replacement of unsuitable materials, gravel cushion in ledge excavation, pavement base, foundation support and similar uses are specified in detail elsewhere. The Engineer may order the use of fill materials for purposes other than those specified in other Sections if, in his/her opinion, such use is advisable.

1.02 RELATED WORK

A. Site Preparation is included in Section 02100

B. Dewatering and Drainage is included in Section 02140.

C. Rock and Boulder excavation is included in Section 02213.

D. Trenching, Backfilling and Compaction is included in Section 02221.

E. Sedimentation and Erosion Control is included in Section 02270.

F. Pavement, repair and resurfacing is included in Section 02576.

G. Loaming and Seeding is included in Section 02930.

1.03 SUBMITTALS

A. Submit, in accordance with Section 01300, complete product data for materials specified in this Section.

1.04 REFERENCE STANDARDS

A. American Society for Testing and Materials (ASTM)

1. ASTM C33 - Standard Specification for Concrete Aggregates.

2. ASTM D698 – Standard Test Methods for Laboratory Compaction Characteristics of Soil Using Standard Effort (12,400 ft-lbf/ft^3 (600 kN-m/m^3))

B. Massachusetts Department of Transportation Highway Division Standard Specifications for Highways and Bridges, and all addendum and supplemental, latest edition (MSSHB).

C. Where reference is made to one of the above standards, the revision in effect at the time of bid opening shall apply.

1.05 QUALITY ASSURANCE

A. Laboratory Testing

1. At least 7 days prior to the placement of any backfill or fill materials, deliver a representative sample of the proposed materials weighing at least 50 lbs to the soils testing laboratory in accordance with Section 01300.

2. The Contractor shall be responsible to engage the services of a soils testing laboratory to perform:

a. Grain size analyses (ASTM D 422) of the samples to determine their suitability for use as backfill or fill material in conformance to the materials requirements specified herein.

b. The appropriate Proctor analyses (ASTM D 1557) to determine the maximum dry densities required for compaction testing as specified elsewhere in the Contract Documents.

3. Test results and determinations of suitability shall be delivered to the Engineer no later than 3 days prior to the placement of backfill or fill materials.

1.06 DELIVERY, STORAGE AND HANDLING

A. If granular fill materials are delivered to the site prior to placement approval, materials shall be stockpiled on site in areas as directed by the Engineer. Provision shall be implemented to minimize surface water impact on the stockpile. Removal and placement of granular fill material shall be done in a manner to minimize intrusion of soils adjacent to and beneath the stockpile.

PART 2 PRODUCTS

2.01 MATERIALS

A. Screened Gravel and Crushed Stone

1. Screened gravel and crushed stone shall consist of sound, durable stone, free of any foreign material, angular in shape, free from structural defects and comparatively free of chemical decay. The crushed stone for access ways and staging areas shall conform to Section M2.01.0, 2.01.1 and M 2.01.2 of the MSSHB. The crushed stone for use underneath manholes, catch basins, concrete encased conduit, riprap setting bed and pipe bedding shall conform to Section M2.01.4 of the MSSHB. Crushed stone used below concrete mats and slabs, or as drainage material shall meet the requirements of MSSHB M2.01.1 and M2.01.2.

2. Crushed stone and screened gravel fill shall be placed in maximum 12-in thick lifts and be separated from the subgrade by a non-woven filter fabric (refer to Section 02221) where shown on the Drawings or specified herein.

3. Where crushed stone is to be used for surfacing, it shall be reasonably free from clay, loam or deleterious material and not more than 0.50 percent of satisfactory material passing the No. 200 sieve.

4. Crushed stone for sediment filtration devices shall be specified in Section 02270.

B. Structural Fill

1. Structural Fill shall be gravel, sandy gravel, or gravelly sand free of organic material, loam, wood, trash, snow, ice, frozen soil and other objectionable material and shall be well graded within the following limits:

Sieve Size	Percent Finer by Weight
4-in	100
No. 4	20 to 70
No. 40	5 to 35
No. 200	0 to 10

C. Common Fill shall consist of mineral soil substantially free from organic materials, loam, wood, trash and other objectionable materials which may be compressible or which cannot be properly compacted. Common fill shall not contain stones larger than 6-in in largest diameter and shall have a maximum of 75 percent passing the No. 40 sieve and a maximum of 30 percent passing No. 200 Sieve. Common fill shall not contain granite blocks, broken concrete, masonry rubble or other similar materials. It shall have physical properties such that it can be readily spread and compacted during filling. Snow, ice and frozen soil will not be permitted. Soil excavated from the structure areas and which meets the above requirements may be used in embankments.

D. Select Common Fill shall be as specified above for Common Fill except that the material shall contain no stones larger than 2-in in largest dimension.

E. Sand shall conform to ASTM C33 for fine aggregate. General purpose sand shall be Select Common Fill. Sand for brick paving shall be as specified in Section 02580.

F. Filter fabric shall be as specified in Section 02221.

G. Staples for installing Erosion Control Blanket shall be made of wire, 0.091-in in diameter or grater, “U” shaped , with legs 6-in in length and a 1-in crown.

H. Impermeable Fill (Clay)

1. Impermeable fill material shall be from an off-site source accepted by the Owner and tested to ensure a permeability coefficient of less than or equal to 1 x 10^{-7} cm/sec after compaction. The material shall be as specified under the Unified Soil Classification System CL, CH, SC or OH in ASTM D2487. Prior to acceptance of the material it shall be tested by an outside independent soils analysis company for the maximum dry density as determined by the modified proctor test, ASTM D1557, Method B, C or D as applicable. Moisture content must be not wetter than 5 percentage points above nor less than 2 percentage points below the optimum moisture content as determined by ASTM D1557, Method B, C or D as applicable. Certified results shall be sent to the Engineer for approval and acceptance.

2. Impermeable clay fill material shall be reasonably free of stumps, brush, or stones larger than 3-in in diameter.

I. Controlled Low Strength Material (CLSM)

1. CLSM used as backfill shall be comprised of a mixture of Portland cement, coarse aggregate, fine aggregate and water. Material methods and placement techniques shall comply with the requirements of Division 3.

3. CLSM should be Controlled Density Fill, Type 2E, in accordance with the MSSHB. CLSM shall contain NO fly ash.

J. Gravel borrow/bank run gravel shall consist of inert material that is hard, durable stone and coarse sand, free from loam and clay, surface coatings and deleterious material and shall conform to the MSSHB M1.03 Type "B" and all supplemental addenda and versions. The use of Processed Glass Aggregate shall not be allowed. Gradation requirements shall conform to AASHTO T11 and T27. Gradation for gravel borrow shall conform to the following:

Sieve	Percent Finer by Weight
1/2-in	50 - 85
No. 4	40 – 25
No. 50	8 – 28
No. 200	0 – 10

Maximum size of stone in gravel shall be as follows:

Type "A"	6-in largest diameter
Type "B"	3-in largest diameter
Type "C"	2-in largest diameter
Type "D"	1.5-in largest diameter

K. Dense Graded Crushed Stone

1. Course aggregate shall consist of hard, durable particles of fragments of stone. Materials that break up when alternately frozen and thawed or wetted and dried shall not be used.

2. Course aggregate shall have a percentage of wear, by the Los Angeles test, of not more than 45.

3. Fine aggregate shall consist of natural or crushed sand.

4. The composition material shall be free from clay, loam, or other plastic material, and shall conform to the following grading requirements.

Sieve Size	Percent Finer by Weight
2-in	100

1-1/2-in.	70 to 100
3/4-in	50 to 85
No. 4	30 to 55
No. 50	8 to 24
No. 200	3 to 10

L. Processed Gravel

1. Processed gravel shall conform to M.1.03.1 of the MSSHB and consist of inert material that is hard, durable stone and coarse sand, free from loam and clay, surface coatings, and deleterious material.

2. The coarse aggregate shall have a percentage of wear, by the Los Angeles Abrasion Test of not more than 50.

3. The gradation shall conform to the following:

Sieve Size	Percent Finer by Weight
3-in	100
1-1/2-in.	70 to 100
¾-in	50-85
No. 4	30 to 60
No. 200	0 to 10

4. The approved source of processed gravel material shall be processed by mechanical means. The equipment for producing crushed gravel shall be of adequate size and with sufficient adjustments to produce the desired materials. The processed material shall stockpiled in such a manner to minimize segregation of particle size. All processed gravel shall come from approved stockpiles.

M. Riprap shall be specified in Section 02270.

END OF SECTION

© 2015 CDM Smith
All Rights Reserved

SECTION 02666
TEMPORARY SERVICES

PART 1 GENERAL

1.01 SCOPE OF WORK

A. Furnish all labor, materials, equipment and incidentals required and install and remove bypass and temporary service pipe and fire hydrants of the sizes required to provide adequate service to all water consumers whose service will be interrupted by new water main installation and to fulfill fire service requirements. Existing fire hydrants connected to pipe being replaced and serving as temporary fire hydrants shall be connected to the temporary pipe at locations directed by the Engineer.

B. Furnish all labor, materials, equipment, and incidentals required for providing tap holes for temporary service by as required by the Engineer/Owner. The work to be done, without limiting the generality thereof, shall be as follows:

1. Excavate all tap holes as required.

2. Provide at no additional cost, sheeting and bracing, and decking as required.

3. Make taps in existing water mains of the necessary size required as approved by the Engineer.

4. Install tapping sleeve and valve at existing main.

5. Backfill all tap holes as required.

6. Restore the excavated surface.

C. The Contractor shall notify the Owner and all respective Fire Department(s) of all existing hydrants taken out of service. The Contractor shall cover all out-of-service hydrants with bags clearly labeled “Not In Service” or “Out Of Service”.

D. The Contractor is responsible for ensuring that all temporary hydrants are compatible with equipment used by the Owner’s Fire Department and any other affected Fire Departments in where hydrants are taken out of service.

E. The Contractor shall provide temporary water service to one and two family residences and to other water customers with small diameter services currently connected to mains to be shut off, in order to facilitate the work, by means of temporary hose connections. All hoses shall be 1-inch minimum diameter and shall be capable of withstanding at least 1.5 times the normal working pressure. All hoses that are to supply potable water to buildings are to be NSF 61 and/or FDA approved for contact with drinking water. These temporary service connections shall be made to sill stops outside the buildings or to temporary connections at the meter inside the buildings, as may be required or directed. All temporary piping and service connections to be installed shall be included in the respective bid prices included on the Bid Form.

F. In cases where access to the building water meter is not possible or where temporary service connection using hoses would not provide adequate supply capacity a temporary service

connection shall be made to the existing service pipe in the street between the shutoff valve at the main and the property line, or in the sidewalk area between the shutoff valve and the service shut off valves inside the building. Payment for temporary service connections shall be included in the various unit Bid Prices for water piping.

G. The work of relocating existing service and of furnishing and installing temporary service pipe, temporary customer services and other branches, maintaining the same, providing suitable safety precautions and removal of the temporary service pipe system shall be the sole responsibility and expense of the Contractor.

H. Temporary services shall not be used between November 1st and April 15th in order to prevent freezing unless permission is otherwise granted by the Owner and Engineer.

I. The Contractor shall submit to the Engineer a daily log of all building/house addresses where temporary service connections have been installed and removed. These forms are included at the end of this section. Payment for temporary service connections and submittal of these daily logs shall be included in the unit Bid Price for furnishing and installing the various sizes of temporary pipe. No payment will be made for furnishing and installing the various sizes of temporary pipe until the Contractor has submitted all daily logs of buildings/houses transferred to and removed from temporary service pipe.

J. The minimum size of temporary bypass piping shall be 2-inches.

K. The minimum size of temporary bypass piping that supplies temporary fire hydrants shall be 6-inches.

L. Contractor shall make 2-inch, 4-inch, and 6-inch temporary taps into existing water mains, as required, to facilitate supply to the temporary bypass piping layout.

M. Temporary hydrants shall be attached to temporary bypass piping that is at least 6-inches in size. If 6-inch temporary bypass piping is not looped and is supplied at one end only, the length shall not exceed 400 feet. For 6-inch temporary bypass piping that is looped and supplied at both ends, the length shall not exceed 1,200 feet. Temporary bypass piping that is 6-inches in size shall be used when the bypass piping lengths exceed 500 feet, bypass piping is supplied at one end, or for lengths that exceed 1,200 feet, supplied at both ends.

N. Construction sequence and special work requirements are included in Section 01014.

1.02 RELATED WORK

A. Excavation and backfill is included under Section 02221.

1.03 SUBMITTALS

A. Submit in accordance with Section 01300, copies of required permits, design of dewatering system and layout of piping for review by Engineer and Owner, and materials for use within the dewatering system.

B. Complete shop drawings as specified.

1.04 REFERENCE STANDARDS

A. American Water Works Association (AWWA)

1. AWWA C651 - Disinfecting Water Mains.

B. National Sanitation Foundation (NSF)

1. NSF 61 – Drinking Water System Components Health Effects.

C. Where reference is made to the above standards, the revision in effect at the time of bid opening shall apply.

PART 2 PRODUCTS

2.01 TEMPORARY SERVICE PIPE

A. Taps for temporary service pipe - six inch tap with tapping sleeve and valve. Furnish and install 6-inch blind flange when tap is abandoned.

B. The temporary service pipe, connections and branches shall be of the highest quality and shall be fully adequate to withstand the pressures and all conditions of use. Contractor shall provide wye connections at all customer sill cocks so customer has access to water supply for outdoor watering. All hoses shall be minimum 1-inch diameter and shall be capable of withstanding at least 1.5 times the normal working pressure. All hoses that are to supply potable water to buildings shall be NSF 61 approved for contact with drinking water.

PART 3 EXECUTION

3.01 INSTALLATION

A. Temporary service pipe shall not be installed without the prior approval of the Engineer.

B. The Contractor shall submit a plan for the proposed layout of the temporary service pipe and connections to the existing distribution system for the Engineer's approval. This plan shall be drawn on a clean set of project drawings or Owner' water distribution system drawings and the temporary service pipe layout shall be consistent with the Contractor's proposed sequence of operations. Proposed changes in the layout of temporary service piping that the Contractor wishes to make, as the work proceeds, shall also be submitted for the Engineer's approval.

C. Make the required taps using approved methods as directed by the Engineer.

D. Wet tap connections (6-inch) will be installed for temporary water supply to users where interruption to water is deemed impossible. Contractor shall furnish all labor, material, equipment and incidentals required to install the connection. Wet tap connections will be made only at the discretion of the Engineer. Contractor shall disinfect tapping sleeve, valve and piping prior to installation as specified herein.

E. Generally, temporary service pipe shall be laid in gutters; however in business areas the Contractor shall, if directed by the Engineer, lay temporary service pipe behind buildings. At driveways, pipe crossings shall be protected by cold patch cover or other approved method. At

street intersections, the Contractor shall cut a straight line in the existing bituminous paving and lay the temporary service pipe in a shallow trench covered with temporary surfacing. At the Engineer's options, the Contractor may be allowed to use hose to come around bends or to cross driveways. Sanitary precautions shall be satisfactory to the Engineer and shall meet all requirements of the public health authorities having jurisdiction. The installation shall be watertight. Care shall be exercised throughout to avoid any possible pollution of mains, house services, or the temporary service pipe. The interior of temporary service pipe, temporary hoses and any other connection pipe to convey water for potable use shall be disinfected prior to its use in accordance with AWWA C651.

F. All temporary pipe shall be suitably valved and meet the approval of the Engineer. A valve shall be provided at each hydrant connection and each tap hole connection. Valves shall be located no further than 500-feet apart when directed by the Engineer.

G. Contractor at minimum shall provide a temporary fire hydrant for each existing fire hydrant connected to water mains taken out of service to facilitate new work.

H. Whether it is being installed, in service, or being removed, the amount of temporary service pipe kept on the job shall be the minimum that will allow the work to continue at a reasonable rate. The Owner reserves the right to limit the total amount of temporary service pipe installed at any given time in order to protect the safety and integrity of the existing water system.

END OF SECTION

CITY OF NEW BEDFORD, MASSACHUSETTS
WASTEWATER SYSTEM IMPROVEMENTS
PHASE I - COGGESHALL STREET SEWER SEPARATION

DAILY LOG FOR REMOVAL OF TEMPORARY SERVICE CONNECTIONS

DATE: _____ **SUBMITTED BY:** _____

	STREET	BUILDING/HOUSE NO.	COMMENTS / NOTES
1			
2			
3			
4			
5			
6			
7			
8			
9			
10			
11			
12			
13			
14			
15			
16			
17			
18			
19			
20			
21			
22			
23			
24			
25			
26			
27			
28			
29			
30			

CITY OF NEW BEDFORD, MASSACHUSETTS
WASTEWATER SYSTEM IMPROVEMENTS
PHASE I - COGGESHALL STREET SEWER SERARATION

DAILY LOG FOR INSTALLATION OF TEMPORARY SERVICE CONNECTIONS

DATE: _____ **SUBMITTED BY:** _____

	STREET	BUILDING/HOUSE NO.	COMMENTS / NOTES
1			
2			
3			
4			
5			
6			
7			
8			
9			
10			
11			
12			
13			
14			
15			
16			
17			
18			
19			
20			
21			
22			
23			
24			
25			
26			
27			
28			
29			
30			

SECTION 02764
TELEVISION INSPECTION

PART 1 GENERAL

1.01 SCOPE OF WORK

A. Each designated section shall be visually inspected by means of a closed-circuit television. The inspection will be done one section at a time and the section being inspected will be suitably isolated from the remainder of the sewer line as required. Contractor shall supply his/her own equipment to complete the work required on this project. CCTV inspection work shall be completed as specified in Part 3 below. In addition, Contractor shall also provide Owner with equipment as specified below to complete CCTV inspection work by Owner's in-house staff as part of this project.

B. Video recordings shall be made of the television inspections and both copies of the recordings and printed inspection logs shall be supplied to the Owner.

C. All CCTV recordings shall be in NASSCO PACP standards compatible with GraniteNET, latest edition.

PART 2 PRODUCTS

2.01 MATERIALS

A. The television camera used for the inspection shall be one specifically designed and constructed for such inspection. Lighting for the camera shall be suitable to allow a clear picture for the entire periphery of the pipe. The camera shall be operative in 100 percent humidity conditions. The camera, television monitor and other components of the video system shall be capable of producing a minimum 500 line resolution video picture. Picture quality and definition shall be to the satisfaction of the Engineer. The Lighting System shall minimize reflective glare.

B. Contractor shall furnish and deliver a CCTV truck to the Owner, with all appropriate GraniteNET software and licenses, 1 year warrantee starting at the time of transfer, and training (5 days) by Cues, Inc., as detailed below. Truck interior must be completely built and assembled by the manufacturer of the CCTV equipment. Vendors that use a 3rd party for the truck build will be deemed not acceptable. Cost shall include transfer of Owner's existing Summit Power Control Unit system into the new CCTV truck; new CCTV truck shall be compatible with the existing system. Cost shall include coordination with City's CMMS vendor – Lucity, Inc. with up to 1 day of meetings and coordination. Cost shall also include an allowance of $2,000 for the purchase of Commtronix 2-way radio to be furnished by the CCTV truck manufacturer and installed by Commtronix following delivery of the vehicle. Contractor shall submit to Owner for review as part of the shop drawing review process layout of truck including any and all equipment prior to manufacture of the equipment. Owner shall approve the shop drawings prior to manufacturer. Any equipment manufactured prior to Owner's approval that Owner rejects shall be returned and replaced to Owner's specifications at no additional cost.

1. Chassis of truck shall be Ford F-450 Gas Cab 189-in wheel base 2 x 4 chassis including:

a. 6.8-L SOHC EFI Triton 30 valve V-10 engine
b. Torqshift 5-speed Selectshift Automatic Transmission with OD including tow/haul mode
c. 4.88 axle ratio
d. 16,500 lb. GVWR
e. 189-in wheel base
f. HD vinyl 40/20/40 split bench seat with a center armrest, a cup holder, and a storage area
g. 12-volt light in cab area
h. Cab air conditioner
i. AM/FM radio
j. CaB shall be white paint.

2. 14-ft cargo box for cab/chassis
   a. 0.40 aluminum pre-painted white side sheets
   b. LED light package including body clearance and stop/tail/turn
   c. Full width barn doors with CAM (pipe) locks on each door.
   d. Laminated steel lock
   e. Kemlite covering on inside rear doors
   f. Water tight 0.032 aluminum one-piece roof sheet
   g. Back-up alarm.

3. Floor mounted pedestal crane.

4. Pintel hitch on chassis.

5. Bumper mounted safety cone holder.

6. LED traffic director with 30-ft cable.

7. Safe entry and exit bumper including three steps evenly spaced with a bottom step that folds up for ground clearance and a safety grab handle.

8. Transporter/camera lockable storage compartment with notch in rear door threshold of bod for TV cable to pass through to transporter storage drawer including a lockable storage compartment for camera and transporter, and a sliding drawer.

9. Kickplate two drawer aluminum storage.

10. TV high cube van exterior lighting and control room – EVO 3.0 to include:
    a. 2 amber LED strobe warning reacons
    b. 2 adjustable LED flood lights rear of vehicle area illumination control room interior
       1) Lonseal Lonplate Flooring
       2) Kemlite Wall & Ceiling Covering
       3) Bulkhead Wall With Passage Door From Control Room to Equipment Room
       4) Tinted Viewing Window in Bulkhead Wall
       5) Tinted Viewing Window in Bulkhead Door
       6) Above Desk Control Console with Rack Mount for Electronic Equipment
       7) Desktop / Work Area
       8) 12V High Intensity LED Light Fixture
       9) 2 - Electrical Outlet with Dual Receptacles

10) Fire Extinguisher with Bracket, 10BC Rating
11) Operators Chair, Swivel With Casters
12) Breaker Box Storage Area with Locking Positive Latch.

11. Carbon monoxide detector mounted in the interior of the unit.

12. Roof top air conditioner, 13,500 but with heat strip.

13. Curbside door with fold down steps for EVO 3.0.

14. Closet in the control room.

15. A wall mounted electric heater in the equipment room.

16. Bench seat in the control room.

17. TV Hi-Cube van equipment room interior – EVO 3.0 to include:
    a. Lonseal Lonplate Flooring
    b. Kemlite Wall & Ceiling Covering
    c. Electrical Outlet with Dual Receptacles
    d. 12V High Intensity LED Light Fixture
    e. 15 Minute Courtesy Timer Located at Rear Door Area for 12V LED Interior Lights.

18. A 20-gallon washdown system to include:
    a. 20-gallon fresh water tank
    b. Electric water pump
    c. Retractable hose real with 25-ft water hose and nozzle.

19. Storage cabinets including a lower cabinet/work top with sink and faucet and an upper mounted wall storage cabinet.

20. Fluorescent light and fixture mounted above work top and a dual receptacle outlet above work top.

21. Accessories include a 4 ½-in vice, mounted to the bench and a 5 drawer tool chest mounted in the bulkhead wall.

22. Air compressor electric drive 4.0 cfm at 100-psi including a retractable air hose reel with 25-ft air hose and chuck.

23. A foul weather door.

24. Back-up camera system (chassis) with a 5-in monitor in the viewing room to be connected to the back-up camera.

25. 32-in rear flat screen monitor mounted in bulkhead wall including a cable assembly for connection of the video monitor to the monitor in the control room and an electrical outlet.

26. 7,000 watt gas Onan Generator – 120V 60 HZ 7,000 watt Electronic Fuel Injection that is gasoline powered with electric start, air cooled and generator remove start/stop cable assembly. Generator shall be located in a generator compartment under the chassis mount

with lockable exterior door. Commercial power supply receptacle and a 25-ft cord and plug with electrically supply center and circuit breaker box, commercial power and generator power connectors with automatic power transfer switch.

27. System engineering panel for power information and generator functions, rack mounted.

28. 1,000-ft gold multi-conductor Kevlar fiber armored combination TV transmission/Tow cable, .450 diameter, metal splice chamber with pigtail and cable strain relief.

29. TV reel assembly, mechanical footage for Summit .450 cable w/auto payout as follows:
    a. Black Thermoplastic Powder Coated Frame
    b. Power Levelwind & Multi Ratio Manual Transmission
    c. Automatic Cable Payout System
    d. Footage Meter with Local Counter and Remote Counter
    e. Transmission Control at Viewing Station
    f. Local Reel Mount Electrical and Mechanical Control
    g. Sealed Continuous Contact Collector Assembly
    h. Removable Drip Pan for Cleaning.

30. 19-in flat screen color industrial TV monitor NTSC/PAL color standards.

31. An HP Office jet color printer.

32. A remote "Qwerty" keyboard for data entry, a 8.7" mini-keyboard, and a USB black computer keyboard and mouse.

33. Customer supplied existing PCU assembly (rack mount) and customer supplied existing CCU assembly including alpha numeric information display with multi paging and defect coding, on screen footage display and WRC and PACP codes.

34. Update Firmware to the latest edition.

35. Provide a test cable.

36. Wired USB controller and a wireless controller with each as follows:
    a. Joystick Control for Pan and Tilt Zoom Camera with 360-degree rotate and 330 degree optical pan
    b. Joystick Control for All Steering Functions & Forward / Reverse Directions for Transporter
    c. Camera lift control for optical electronic cameral lift
    d. All other controls for camera including camera iris and focus override and zoom, camera lights and shutter control for light enhancement, camera diagnostics and auto home
    e. Cruise Control to Set Speed of the Transporter for Hands Off Operation
    f. All Reel Controls to Include: Retrieve, Release, and Variable Speed [Excluding Dolly
    g. Systems].

37. Rack mounted computer with GraniteNet Premium to include a motherboard with Motherboard with LGA 1150 Socket and Intel Z87 Chipset, Intel Core i7-4770K Haswell 3.5 GHz Quad-Core Processor, an 8GB of DDR3 (Double Data Rate) 1600 RAM, USB Video Capture Device for MPEG 1 / 2 / 4 / WMV, a Video Display Adapter, 1GB, two

LAN, On Board Network Connections, 10 / 100 / 1000 Mbps, six USB 2.0 Ports (4 on Rear, 2 on Front), six USB 3.0 Ports (6 on Rear), two RS232 Serial Comm Ports, a Bluetooth v4.0 / v3.0 + HS, a WiFi IEEE 802.11 a/b/g/n, eight On Board Audio Ports, a DVD + / - RW DVD Burner 20x / CD - RW 40x Internal Optical Drive, a 1 TB (7,200 RPM) SATA Hard Drive, a 120 GB Solid State Drive, SATA3, a 400 Watt 1UATX Power Supply, a 1GB 64-bit DDR3 PCI Express Video Card, an Industrial Hardened Case Slim 2U Design for 19" Rack, a Windows 7 Professional 64-bit Operating System, a GraniteNet Premium Software, User Guide, and a System Recovery Disk.

38. GraniteNet software package including:
    a. PACP module
    b. MACP module
    c. Node inspection module
    d. ESRI interface module
    e. ESRI import module
    f. Data GIS system remove online implementation assistance
    g. ArcGIS runtime engine software
    h. Premium software support plan.

39. Three GraniteNet office kits including three office support plans.

40. Manhole camera accessories including a manhole top roller assembly, TV only, manhole adapter claw hook, Six – retrieval/downhole pole assembly, an invert roller assembly, and a retrieval hook.

41. A multi-conductor TV only tool kit.

C. Contractor shall furnish and deliver a CCTV camera and accessories for use by the Owner for the duration of the project, by Cues, Inc. as detailed below. Camera shall be manufactured by the same manufacturer as the CCTV truck and all equipment shall be compatible. The CCTV camera and accessories shall be turned over to the Owner with a one year warrantee starting at the time of transfer. Contractor shall submit to Owner for review as part of the shop drawing review process all equipment and accessories prior to manufacture of the equipment. Owner shall approve the shop drawings prior to manufacturer. Any equipment manufactured prior to Owner's approval that Owner rejects shall be returned and replaced to Owner's specifications at no additional cost.

1. Pan and tilt zoom III M/C LED Camera shall be a solid state color sewer TV camera with pan and rotate camera head, a 40:1 zoom ratio, 10x optical zoom and a 4x digital zoom that uses NTSC color standard with 4x light integration, 4 x 5W cluster LED's for 6" through 72" pipes and be supplied with a camera transportation and storage case.

2. Brass comp steerable camera transporter wheeled that shall be a steerable unit designed to turn 360 degrees within its own radius, have a two speed transmission to maximize torque in large diameter pipes with manual shifter on the camera carrier. The unit shall have forward, free wheel, and power reverse capabilities. Camera shall be supplied with a set of driven rubber wheels to inspect 6-in pipes. All six (6) wheel drive transporter assembly to include a motor and enclosed drive train with a tip up rear 12-in pin connector.

3. Camera shall be supplied with an upgrade OzIII with built in sonde and transmitter, ,512 Hz for locating the camera underground. A multi-frequency location device shall be supplied for use with the sonde.

4. Camera shall include a rear view camera for steerable compact transporter that is color/IR camera with 12 LED/IR (Infrared) lighting with auto switching sensor and a quick cable lock pigtale coupler kit.

5. Camera accessories shall include the following:
   a. One - 8-in rubber wheel kit for compact transporter
   b. One – 10-in to 15-in rubber wheel kit for compact transporter
   c. One – Electric camera lift for compact transporter
   d. One – Kit tire, pneumatic 12-in to 15-in compact transporter
   e. One – 6-in steel 10/12 GR wheel kit for compact transporter
   f. One – 8-in steel 10/12 GR wheel kit for compact transporter
   g. One – 10-in to 15-in steel 10/12 GR wheel kit for compact transporter.

D. Contractor shall furnish and deliver a pole mounted manhole inspection camera and accessories for use by the Owner for the duration of the project, by Cues, Inc. as detailed below. Camera shall be manufactured by the same manufacturer as the CCTV truck and all equipment shall be compatible. The camera and accessories shall be turned over to the Owner with a one year warrantee starting at the time of transfer. Contractor shall submit to Owner for review as part of the shop drawing review process all equipment and accessories prior to manufacture of the equipment. Owner shall approve the shop drawings prior to manufacturer. Any equipment manufactured prior to Owner's approval that Owner rejects shall be returned and replaced to Owner's specifications at no additional cost.

1. Camera shall be a compact high resolution camera assembly with a 420:1 (35 optical and 12 digital) zoom, built in light enhancement for viewing in ultra-low light conditions, camera video module with user selectable built in video image stabilization and two dual wattage high intensity discharge lights (9.5" w and 14 w).

2. A carbon-fiber telescoping pole 24.5-ft long with low profile lock handles and a hand pole adjustment.

3. Equipment shall include a standalone and wireless unit to TV wireless receiver with 2.4 GHZ with Omni Directional Antenna, a audio/video transmitter, 2.4 GHZ, A/B video switch, an outlet, cables, and instructions.

4. Camera shall also include the following:
   a. Hand Control Unit for Lights and camera Functions
   b. Camera Mount Assembly with Swivel Adjustment
   c. Video / Power Cable Assembly
   d. Calibrated Pipe Diameter Guide with Spring Stabilizer Rod
   e. Padded Lockable Storage Case with Rollers and Extend Handle
   f. ANSI / ISEA 107-2004 Class 2 Adjustable Hi-Visibility Safety / Battery Vest with padded shoulder supports
   g. Digital Media Case with Adjustable Sun Shade
   h. Two Battery chargers
   i. Two Rechargeable Batteries
   j. Interface Cable

k. Power Supply
l. Interface Box Assembly
m. A / B Video Switch
n. 6.4" LCD Screen
o. DVR SD
p. Mounting Bracket
q. Video / Audio & Power Cables
r. Integrated Wireless Video / Audio Transmitter [2.4 GHz] with Antenna

PART 3 EXECUTION

3.01 PERFORMANCE

A. The camera shall be moved through the line in either direction at a uniform rate, stopping when necessary to insure proper documentation of the sewer's condition but in no case will the television camera be pulled at a speed greater than 30 fpm. Manual winches, power winches, TV cable and powered rewinds or other devices that do not obstruct the camera view or interfere with proper documentation of the sewer conditions shall be used to move the camera through the sewer line. If, during the inspection operation the television camera will not pass through the entire manhole section, the Contractor shall re-set up his/her equipment in a manner so that the inspection can be performed from the opposite manhole. If, again, the camera fails to pass through the entire section, the Contractor shall remove the obstruction by excavation and replacement of that section of pipe as specified herein.

B. Whenever non-remote powered and controlled winches are used to pull the television camera through the line, telephones, radios, or other suitable means of communication shall be set up between the two manholes of the section being inspected to ensure that good communications exist between members of the crew.

C. The accuracy of the measurements cannot be stressed too strongly. Measurement for location of defects shall be above ground by means of a meter device. Marking on cable, or the like, which would require interpolation for depth of manhole, will not be allowed. Measurement meters will be accurate to two tenths of a foot over the length of the section being inspected. Accuracy of the measurement meters shall be checked daily by use of a walking meter, roll-a-tape or other suitable device.

D. Documentation of the television results shall be as follows:

1. Television Inspection Logs
   a. Printed location records shall be kept by the Contractor and will clearly show the location, in relation to adjacent manholes, of each source of infiltration discovered. In addition, other data of significance including the locations of building and house service connections, along with an estimation of infiltration from such services, joints, unusual conditions, roots, storm sewer connections, collapsed sections, presence of scale and corrosion and other discernible features will be recorded and a copy of such records will be supplied to both the Owner and the Engineer.
   b. TV recordings shall be on the Owner’s asset numbering system to be supplied by the Owner for Contractor’s use.

2. Video recordings of the data on the television monitor shall be made by the Contractor copies of which, in a DVD format, shall be provided to the Owner.

END OF SECTION

TEST BORING LOG

SHEET

Soil Exploration Corp. Geotechnical Drilling Groundwater Monitor Well 148 Pioneer Drive Leominster, MA 01453 978 840-0391	**Camp Dresser & McKee, Inc.** **Site: Sewer Separation Project** **New Bedford, MA**	BORING B-DS-14 PROJECT NO. 05-0339 DATE: May 3, 2005

Ground Elevation:
Date Started: April 26, 2005
Date Finished: April 26, 2005
Driller: GG
Soil Engineer/Geologist:

GROUNDWATER OBSERVATIONS			
DATE	DEPTH	CASING	STABILIZATION

Depth Ft.	Casing bl/ft	Sample No.	Pen/Rec	Sample Depth	Blows/6"	Strata	Visual Identification of Soil and / or Rock Sample
						0'3"	Asphalt – 0'3"
1		1		0'3"-2'3"	12-12-14-14		Medium dense to dense, dry, fine to coarse sand and gravel, some cobbles, trace inorganic silt.
		2		2'4"-4'3"	9-17-22-22		
5		3		5'0"-7'0"	14-21-22-25		
10						10'0"	Refusal at 10'0" with hollow stem auger. No water encountered upon completion.
15							
20							
25							
30							
35							
39							

Notes: Hollow Stem Auger Size - 4-1/4"

Cohesionless: 0 - 4 V. Loose, 4 - 10 Loose,	Trace	0 to 10%		CASING	SAMPLE	CORE TYPE
10 -30 M Dense, 30 -50 Dense, 50+ V Dense.	Little	10 to 20%	ID SIZE (IN)		S/S	
Cohesive: 0 -2 V Soft, 2 -4 Soft, 4 -8 M Stiff	Some	20 to 35%	HAMMER WGT (LB)		140 Lb.	
8 -15 Stiff, 15 -30 V. Stiff, 30 + Hard.	And	35% to 50%	HAMMER FALL (IN)		30"	

TEST BORING LOG SHEET

Soil Exploration Corp. Geotechnical Drilling Groundwater Monitor Well 148 Pioneer Drive Leominster, MA 01453 978 840-0391	**Camp Dresser & McKee, Inc.** **Site: Sewer Separation Project** **New Bedford, MA**	BORING B-CS-30 PROJECT NO. 05-0339 DATE: May 10, 2005

Ground Elevation:
Date Started: May 4, 2005
Date Finished: May 4, 2005
Driller: GG
Soil Engineer/Geologist:

GROUNDWATER OBSERVATIONS

DATE	DEPTH	CASING	STABILIZATION

Depth Ft.	Casing bl/ft	Sample No.	Pen/Rec	Sample Depth	Blows/6"	Strata	Visual Identification of Soil and / or Rock Sample
						0'6"	Asphalt – 0'6"
1		1		0'6"-2'6"	11-20-21-22		Dense, dry, fine to coarse sand, trace fine to coarse gravel.
		2		2'6"-4'6"	2-3-3-3	2'6"	Loose, wet, fine to coarse sand, some organic silt and inorganic silt.
5		3		5'0"-7'0"	9-12-15-15	4'6"	Dense to very dense, wet, fine to coarse sand and gravel, trace cobbles and inorganic silt
10		4		10'0"-10'1"	100/1"	10'6"	Refusal at 10'1" with split spoon sampler, 100/1". Refusal at 10'6" with hollow stem auger. Water level at 6'0 upon completion.
15							
20							
25							
30							
35							
39							

Notes: Hollow Stem Auger Size - 4-1/4"

Cohesionless: 0 - 4 V. Loose, 4 - 10 Loose,	Trace	0 to 10%		CASING	SAMPLE	CORE TYPE
10 -30 M Dense, 30 -50 Dense, 50+ V Dense.	Little	10 to 20%	ID SIZE (IN)		S/S	
Cohesive: 0 -2 V Soft, 2 -4 Soft, 4 -8 M Stiff	Some	20 to 35%	HAMMER WGT (LB)		140 Lb.	
8 -15 Stiff, 15 -30 V. Stiff, 30 + Hard.	And	35% to 50%	HAMMER FALL (IN)		30"	

TEST BORING LOG

SHEET

Soil Exploration Corp. Geotechnical Drilling Groundwater Monitor Well 148 Pioneer Drive Leominster, MA 01453 978 840-0391	**Camp Dresser & McKee, Inc.** **Site: Sewer Separation Project** **New Bedford, MA**	BORING B-CS-31 PROJECT NO. 05-0339 DATE: May 3, 2005

Ground Elevation:
Date Started: April 28, 2005
Date Finished: April 28, 2005
Driller: GG
Soil Engineer/Geologist:

GROUNDWATER OBSERVATIONS

DATE	DEPTH	CASING	STABILIZATION

Depth Ft.	Casing bl/ft	Sample No.	Pen/Rec	Sample Depth	Blows/6"	Strata	Visual Identification of Soil and / or Rock Sample
						0'1"	Asphalt – 0'1"
1		1		0'1"-2'1"	11-12-12-12		Medium dense, dry, fine to coarse sand, trace fine to medium gravel, trace inorganic silt.
		2		2'1"-4'1"	9-9-11-9		
5		3		5'0"-7'0"	5-7-7-7	5'0"	Medium dense, wet, fine to coarse sand, trace fine to coarse gravel, some organic silt.
						7'0"	
10		4		10'0"-12'0"	12-15-17-20		Dense, wet, fine to coarse sand and gravel, trace cobbles, trace inorganic silt.
						12'0"	End of boring at 12'0" with hollow stem auger. Water level at 6'0 upon completion.
15							
20							
25							
30							
35							
39							

Notes: Hollow Stem Auger Size - 4-1/4"

Cohesionless: 0 - 4 V. Loose, 4 - 10 Loose,	Trace	0 to 10%		CASING	SAMPLE	CORE TYPE
10 -30 M Dense, 30 -50 Dense, 50+ V Dense.	Little	10 to 20%	ID SIZE (IN)		S/S	
Cohesive: 0 -2 V Soft, 2 -4 Soft, 4 -8 M Stiff	Some	20 to 35%	HAMMER WGT (LB)		140 Lb.	
8 -15 Stiff, 15 -30 V. Stiff, 30 + Hard.	And	35% to 50%	HAMMER FALL (IN)		30"	

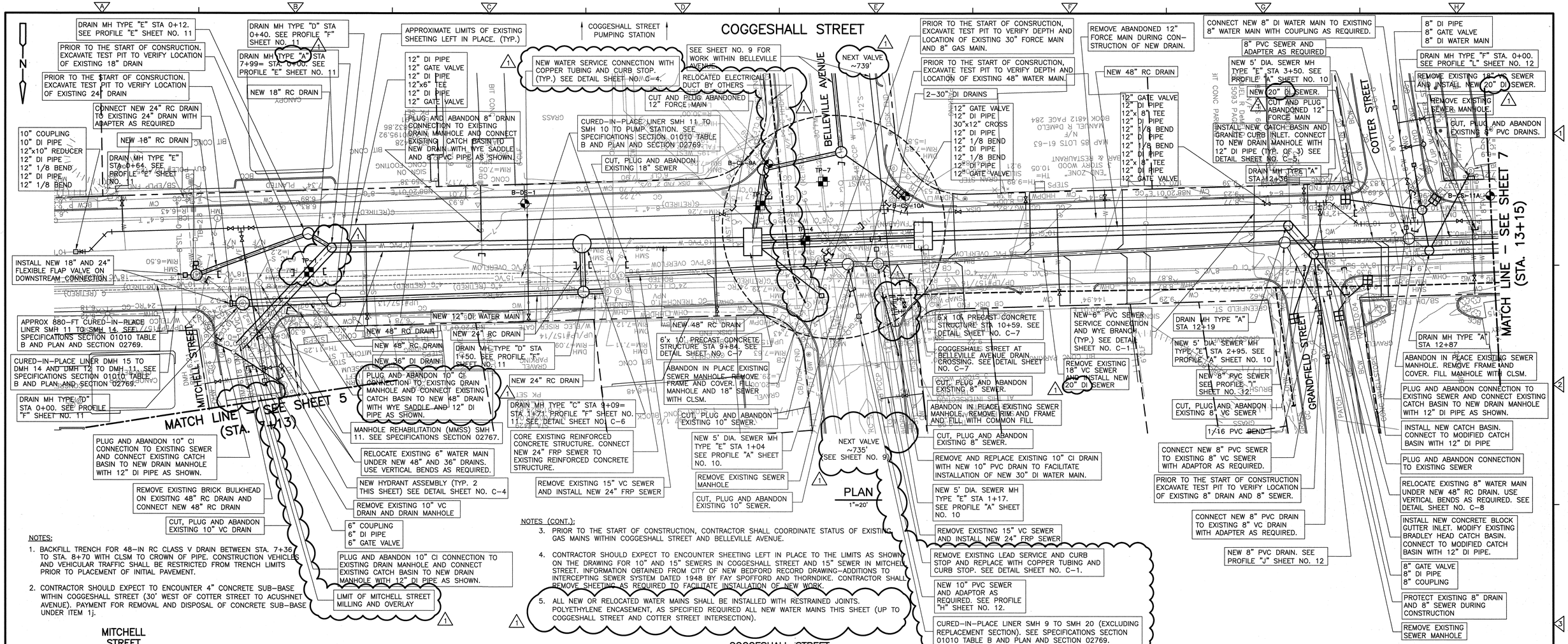

NOTES:

1. BACKFILL TRENCH FOR 48-IN RC CLASS V DRAIN BETWEEN STA. 7+36 TO STA. 8+70 WITH CLSM TO CROWN OF PIPE. CONSTRUCTION VEHICLES AND VEHICULAR TRAFFIC SHALL BE RESTRICTED FROM TRENCH LIMITS PRIOR TO PLACEMENT OF INITIAL PAVEMENT.
2. CONTRACTOR SHOULD EXPECT TO ENCOUNTER 4" CONCRETE SUB-BASE WITHIN COGGESHALL STREET (30' WEST OF COTTER STREET TO ACUSHNET AVENUE). PAYMENT FOR REMOVAL AND DISPOSAL OF CONCRETE SUB-BASE UNDER ITEM 1j.

NOTES (CONT.):

3. PRIOR TO THE START OF CONSTRUCTION, CONTRACTOR SHALL COORDINATE STATUS OF EXISTING GAS MAINS WITHIN COGGESHALL STREET AND BELLEVILLE AVENUE.
4. CONTRACTOR SHOULD EXPECT TO ENCOUNTER SHEETING LEFT IN PLACE TO THE LIMITS AS SHOWN ON THE DRAWING FOR 10" AND 15" SEWERS IN COGGESHALL STREET AND 15" SEWER IN MITCHELL STREET. INFORMATION OBTAINED FROM CITY OF NEW BEDFORD RECORD DRAWING-ADDITIONS TO INTERCEPTING SEWER SYSTEM DATED 1948 BY FAY SPOFFORD AND THORNDIKE. CONTRACTOR SHALL REMOVE SHEETING AS REQUIRED TO FACILITATE INSTALLATION OF NEW WORK.
5. ALL NEW OR RELOCATED WATER MAINS SHALL BE INSTALLED WITH RESTRAINED JOINTS. POLYETHYLENE ENCASEMENT, AS SPECIFIED REQUIRED ALL NEW WATER MAINS THIS SHEET (UP TO COGGESHALL STREET AND COTTER STREET INTERSECTION).

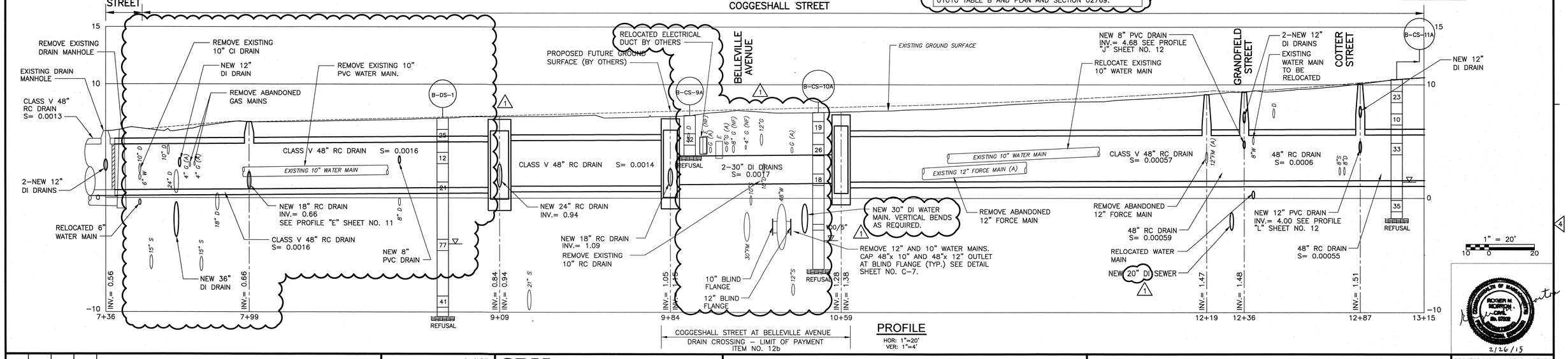

REV. NO.	DATE	DRWN	CHKD	REMARKS
1	2/15	AW	SS	REVISED PER ADDENDUM NO. 1

DESIGNED BY: S. SYDE
DRAWN BY: A. WELDON
SHEET CHK'D BY: L. VIERA
CROSS CHK'D BY: J. KEANEY
APPROVED BY: R. NORTON
DATE: FEBRUARY 2015

CDM Smith
260 West Exchange Street, Suite 300
Providence, RI 02903
Tel: (401) 751-5360

CITY OF NEW BEDFORD, MASSACHUSETTS
WASTEWATER SYSTEM IMPROVEMENTS

PHASE I - COGGESHALL STREET SEWER SEPARATION

COGGESHALL STREET

PROJECT NO. 0309-107278
FILE NAME: CSTPL006.DWG
SHEET NO. 6
0309-P-4490

© 2015 CDM SMITH ALL RIGHTS RESERVED.
REUSE OF DOCUMENTS: THESE DOCUMENTS AND DESIGNS PROVIDED BY PROFESSIONAL SERVICE, INCORPORATED HEREIN, ARE THE PROPERTY OF CDM SMITH AND ARE NOT TO BE USED, IN WHOLE OR PART, FOR ANY OTHER PROJECT WITHOUT THE WRITTEN AUTHORIZATION OF CDM SMITH.

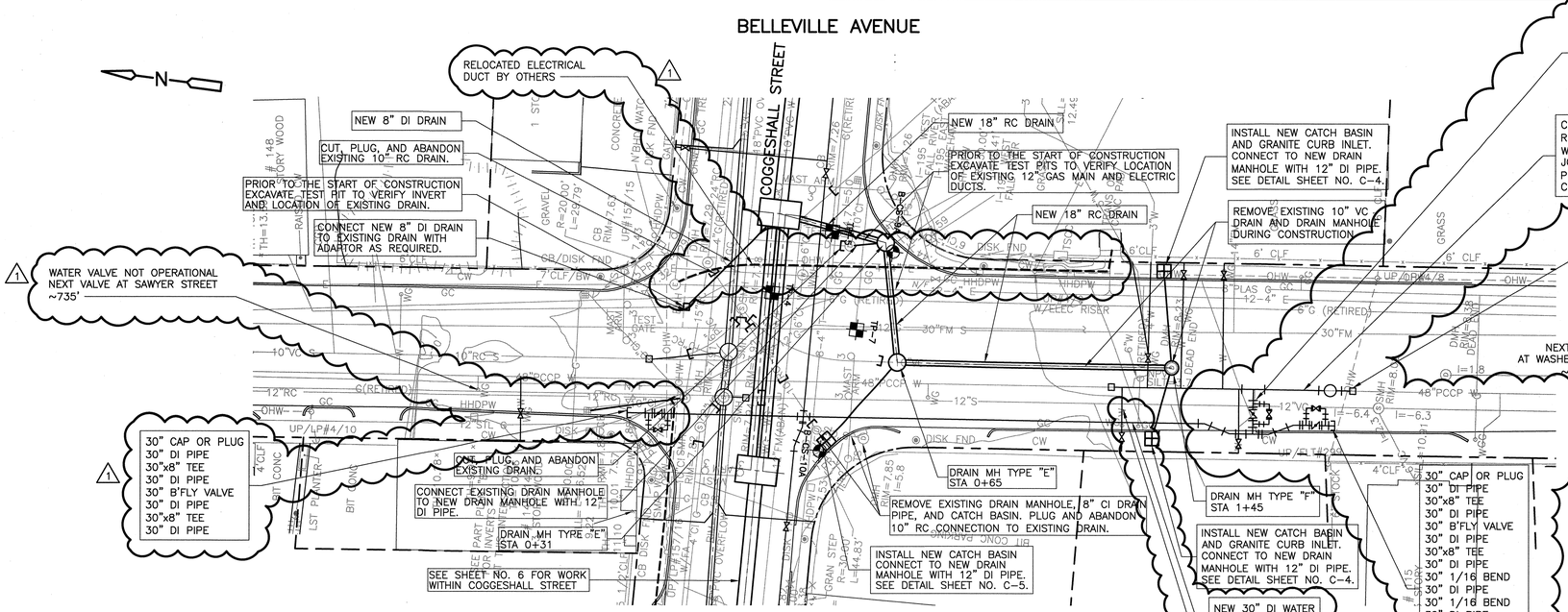

PLAN

1"=20'

PCCP TRANSMISSION MAIN NOTES:

1. CONTRACTOR SHALL SUBMIT A DEWATERING PLAN INDICATING PROCEDURE FOR ISOLATING AND DEWATERING THE EXISTING TRANSMISSION MAIN. VALVE LOCATIONS ARE SHOWN ON THE DRAWINGS. CONTRACTOR SHOULD EXPECT UP TO 100 GPM THROUGH EACH VALVE CLOSURE. SEE SPECIFICATIONS SECTION 02120.
2. CONTRACTOR SHALL EXCAVATE TEST PIT AT THE PROPOSED LOCATION OF EACH ADAPTER TO DETERMINE THE TYPE OF JOINT AND ADAPTER (SPIGOT OR BELL END ADAPTER) AND WHETHER A HARNESSED JOINT IS REQUIRED FOR THE ADAPTER.
3. DURING TEST PIT EXCAVATION, CONTRACTOR SHALL PERFORM A VISUAL INSPECTION OF THE EXPOSED PIPE FOR EVIDENCE OF ANY DISCOLORATION OR DETERIORATED CONCRETE OR MORTAR. THE CONTRACTOR SHALL ARRANGE FOR NON DESTRUCTIVE TESTING OF THE PIPE THAT WILL REMAIN AT EACH LOCATION TO DETERMINE THE STRUCTURAL INTEGRITY OF THE PIPE. UPON COMPLETION OF TESTING, CONTRACTOR SHALL SUBMIT TO THE OWNER AND ENGINEER A REPORT THE DISCUSSES THE RESULTS OF THE FIELD INVESTIGATION.
4. BASED ON THE FINDINGS OF THE FIELD EVALUATION, THE CONTRACTOR SHALL SUBMIT A DETAILED SCALED DRAWING SHOWING THE PROPOSED DI PIPING INSTALLATION AND APPURTENANT COMPONENTS FOR THE OWNER AND ENGINEER'S REVIEW AND APPROVAL.
5. CONTRACTOR SHALL REMOVE THE EXISTING PCCP WITH CARE AND DELIVER SECTIONS TO THE CITY OF NEW BEDFORD YARD ON SHAWMUT AVENUE FOR EVALUATION. AT THE COMPLETION OF THE EVALUATION, THE CONTRACTOR SHALL REMOVE AND DISPOSE OF ALL SECTIONS OF PCCP PIPE.

GENERAL NOTES:

1. ALL NEW OR RELOCATED WATER MAINS SHALL BE INSTALLED WITH RESTRAINED JOINTS.

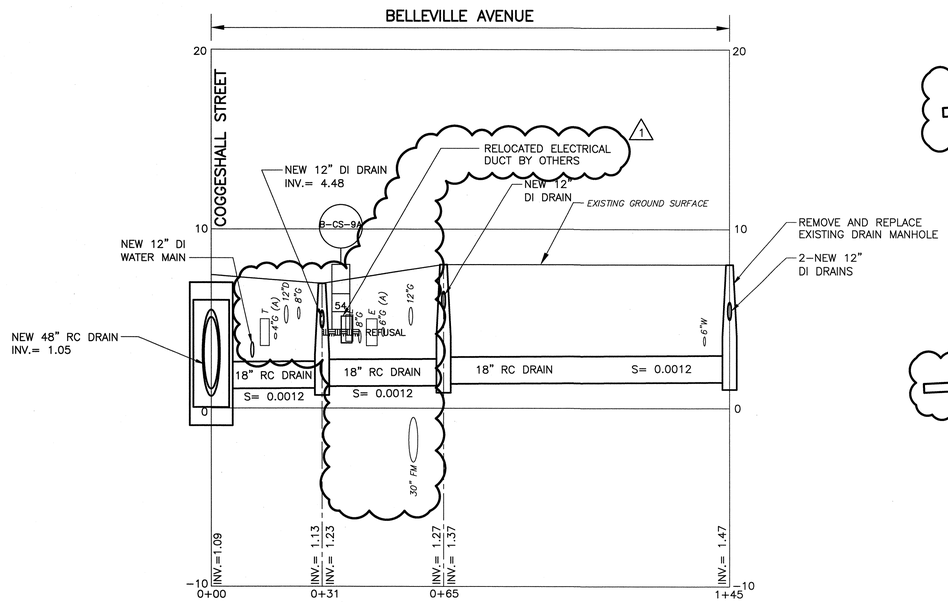

PROFILE

HOR: 1"=20'
VER: 1"=4'

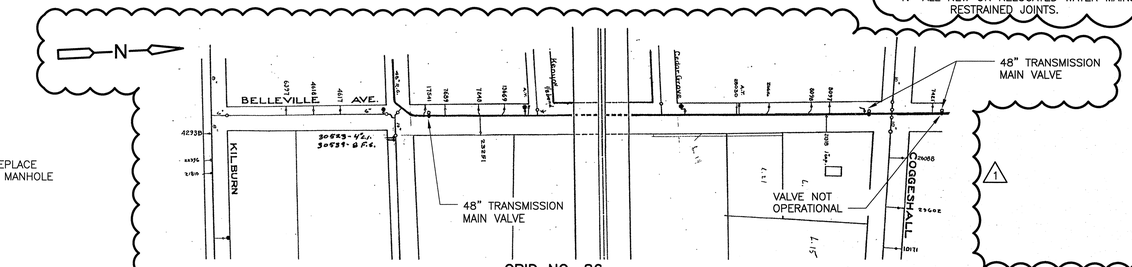

GRID NO. 86

PLAN

1" = 120'± (SCANNED)

NOTE:

1. 48" WATER TRANSMISSION MAIN SERVICE CONNECTIONS OBTRAINED FROM THE CITY OF NEW BEDFORD WATER PLOT PLANS GRID NOs. 86 AND 93.

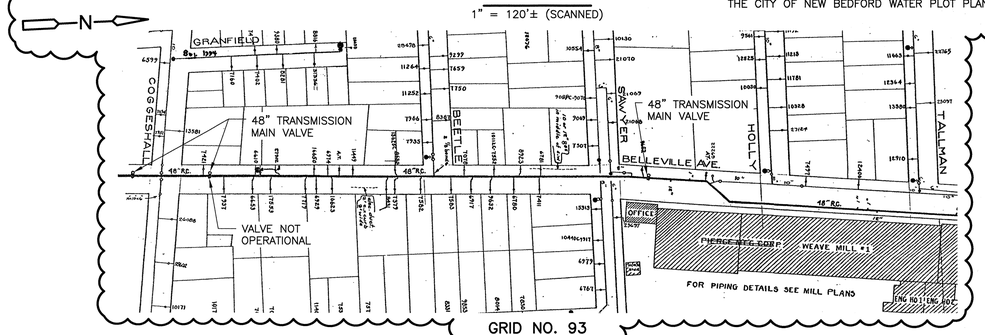

GRID NO. 93

PLAN

1" = 120'± (SCANNED)

1" = 20'
10 0 20

ROBERT H. NORTON CIVIL No. 37262 REGISTERED PROFESSIONAL ENGINEER
2/26/15

REV. NO.	DATE	DRWN	CHKD	REMARKS
1	2/15	AW	SS	REVISED PER ADENDUM NO. 1

DESIGNED BY: S. SYDE
DRAWN BY: A. WELDON
SHEET CHK'D BY: L. VIERA
CROSS CHK'D BY: J. KEANEY
APPROVED BY: R. NORTON
DATE: FEBRUARY 2015

CDM Smith
260 West Exchange Street, Suite 300
Providence, RI 02903
Tel: (401) 751-5360

CITY OF NEW BEDFORD, MASSACHUSETTS
WASTEWATER SYSTEM IMPROVEMENTS

PHASE I - COGGESHALL STREET SEWER SEPARATION

BELLEVILLE AVENUE

PROJECT NO. 0309-107278
FILE NAME: CSTPL009.DWG
SHEET NO.
9
0309-P-4493

© 2015 CDM SMITH ALL RIGHTS RESERVED.
REUSE OF DOCUMENTS: THESE DOCUMENTS AND DESIGNS PROVIDED BY PROFESSIONAL SERVICE, INCORPORATED HEREIN, ARE THE PROPERTY OF CDM SMITH AND ARE NOT TO BE USED, IN WHOLE OR PART, FOR ANY OTHER PROJECT WITHOUT THE WRITTEN AUTHORIZATION OF CDM SMITH.

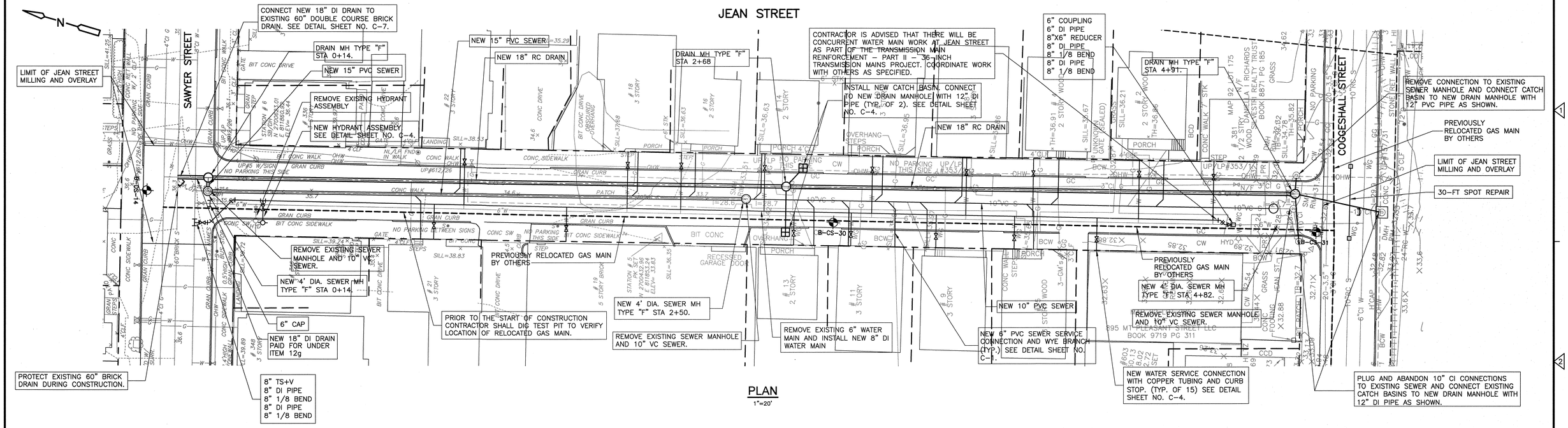

PLAN
1"=20'

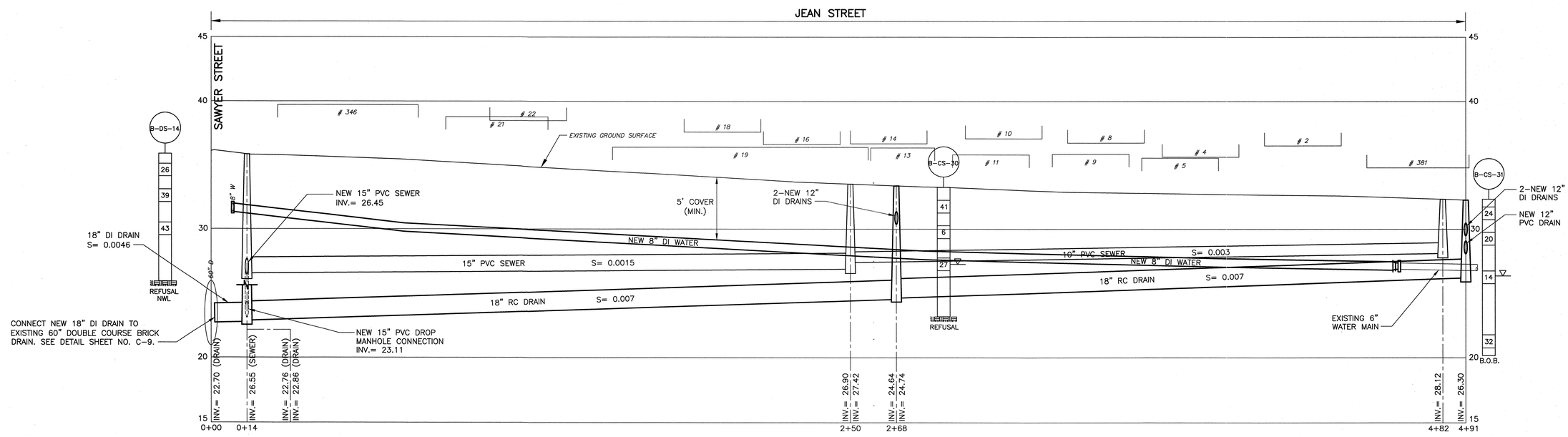

PROFILE
HOR: 1"=20'
VER: 1"=4'

1" = 20'

REV. NO.	DATE	DRWN	CHKD	REMARKS
1	2/15	AW	SS	SHEET ADDED PER ADDENDUM NO. 1.

DESIGNED BY: S. SYDE
DRAWN BY: A. WELDON
SHEET CHK'D BY: L. VIERA
CROSS CHK'D BY: J. KEANEY
APPROVED BY: R. NORTON
DATE: FEBRUARY 2015

CDM Smith
260 West Exchange Street, Suite 300
Providence, RI 02903
Tel: (401) 751-5360

CITY OF NEW BEDFORD, MASSACHUSETTS
WASTEWATER SYSTEM IMPROVEMENTS

PHASE I - COGGESHALL STREET SEWER SEPARATION

JEAN STREET

PROJECT NO. 0309-107278
FILE NAME: CSTPL09A.DWG

SHEET NO.
9A

0309-P-4493A

©2015 CDM SMITH ALL RIGHTS RESERVED.
REUSE OF DOCUMENTS: THESE DOCUMENTS AND DESIGNS PROVIDED BY PROFESSIONAL SERVICE, INCORPORATED HEREIN, ARE THE PROPERTY OF CDM SMITH AND ARE NOT TO BE USED, IN WHOLE OR PART, FOR ANY OTHER PROJECT WITHOUT THE WRITTEN AUTHORIZATION OF CDM SMITH.

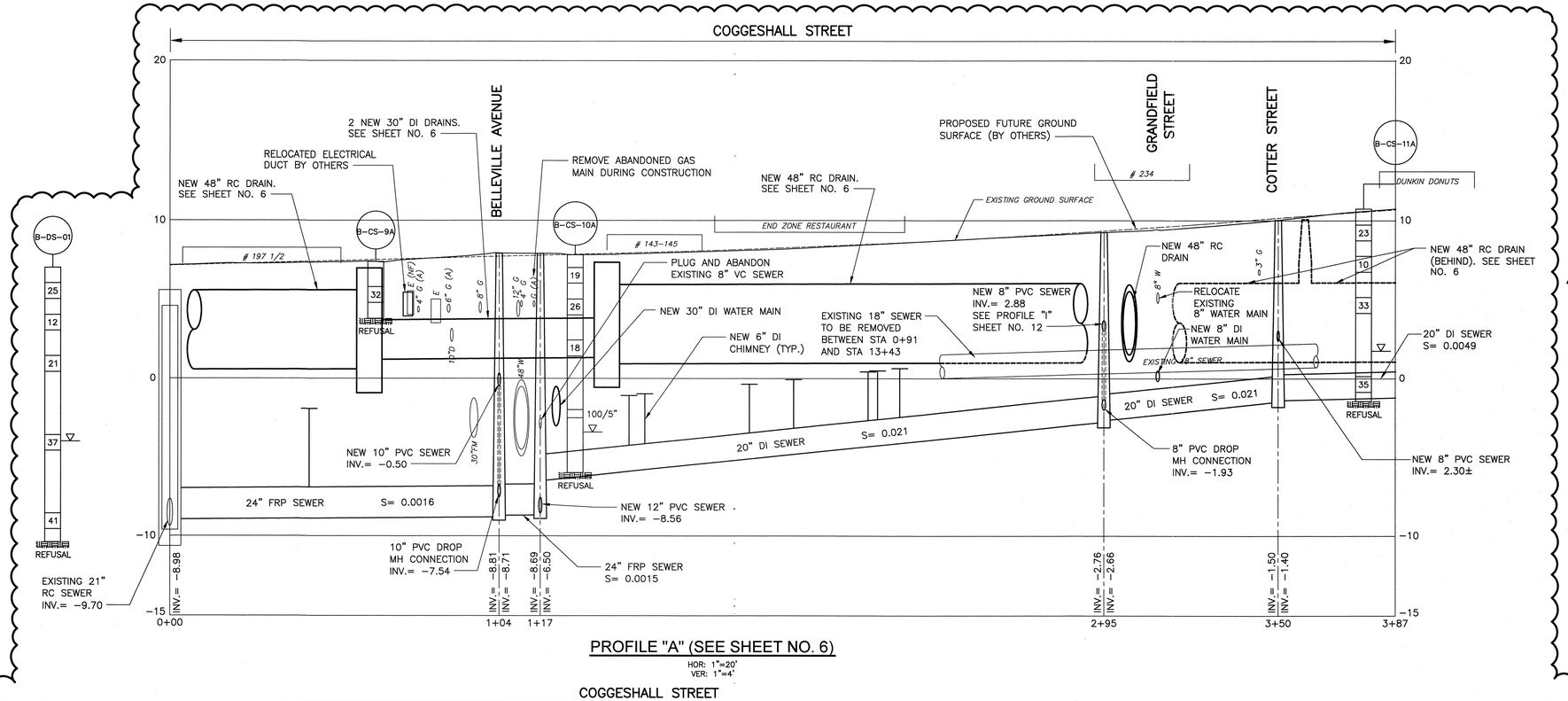

PROFILE "A" (SEE SHEET NO. 6)

HOR: 1"=20'
VER: 1"=4'

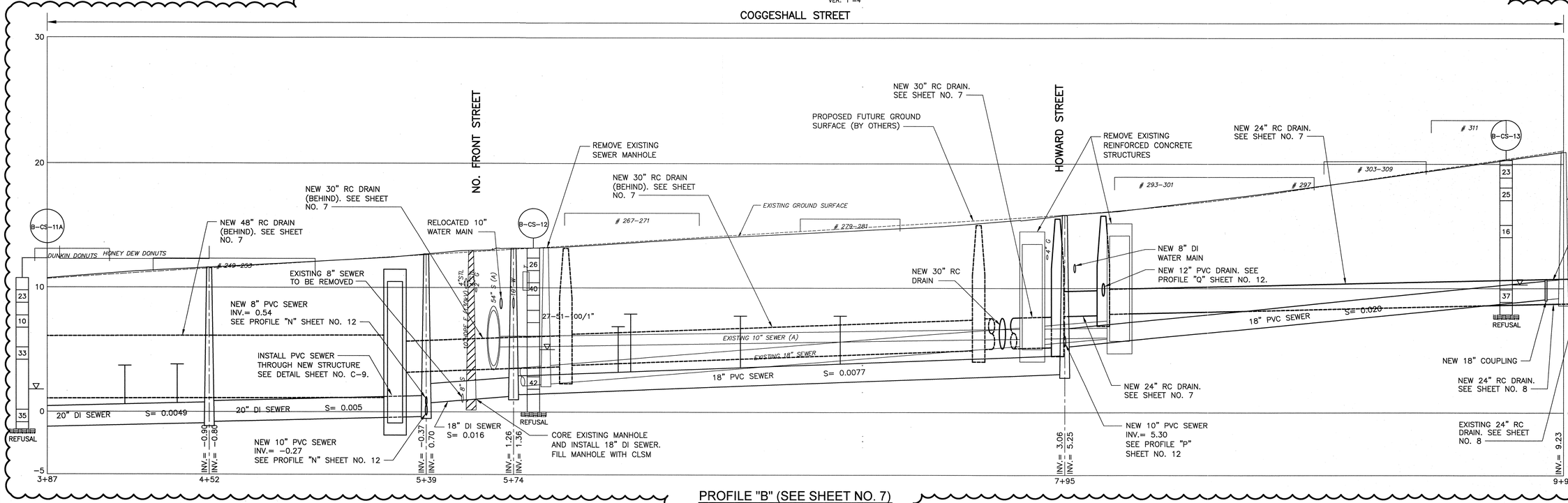

PROFILE "B" (SEE SHEET NO. 7)

HOR: 1"=20'
VER: 1"=4'

1" = 20'

2/26/15

REV. NO.	DATE	DRWN	CHKD	REMARKS
1	2/15	AW	SS	REVISED PER ADDENDUM NO. 1

DESIGNED BY: S. SYDE
DRAWN BY: A. WELDON
SHEET CHK'D BY: L. VIERA
CROSS CHK'D BY: J. KEANEY
APPROVED BY: R. NORTON
DATE: FEBRUARY 2015

CDM Smith
260 West Exchange Street, Suite 300
Providence, RI 02903
Tel: (401) 751-5360

CITY OF NEW BEDFORD, MASSACHUSETTS
WASTEWATER SYSTEM IMPROVEMENTS

PHASE I - COGGESHALL STREET SEWER SEPARATION

MISCELLANEOUS PROFILES I

PROJECT NO. 0309-107278
FILE NAME: CSTPL010.DWG

SHEET NO.
10

0309-P-4494

© 2015 CDM SMITH ALL RIGHTS RESERVED.
REUSE OF DOCUMENTS: THESE DOCUMENTS AND DESIGNS PROVIDED BY PROFESSIONAL SERVICE, INCORPORATED HEREIN, ARE THE PROPERTY OF CDM SMITH AND ARE NOT TO BE USED, IN WHOLE OR PART, FOR ANY OTHER PROJECT WITHOUT THE WRITTEN AUTHORIZATION OF CDM SMITH.

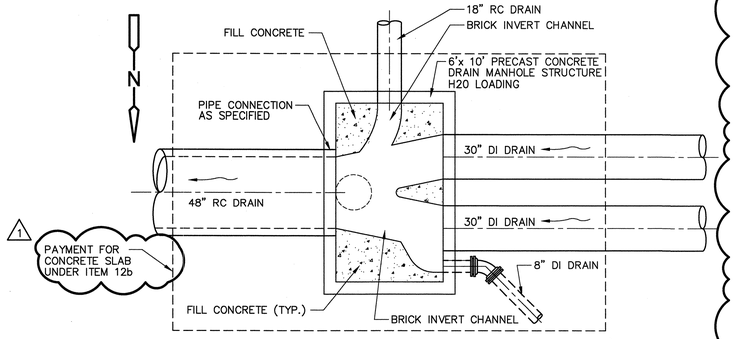

PLAN–STRUCTURE STA. 9+84 (SIMILAR FOR STA. 10+59)

1/4" = 1'–0"

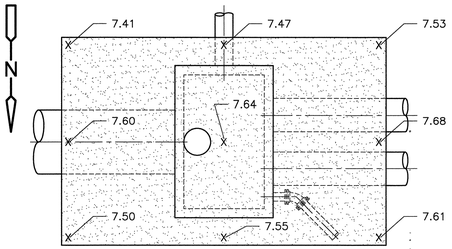

STA 9+09 ROOF PLAN

NTS

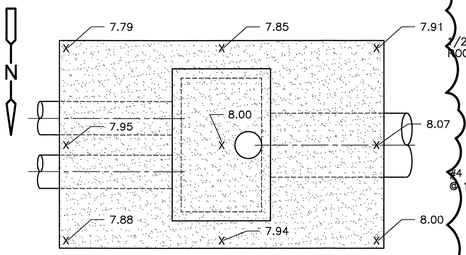

STA 10+59 ROOF PLAN

NTS

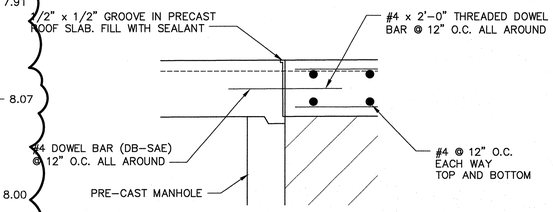

DETAIL A

NTS

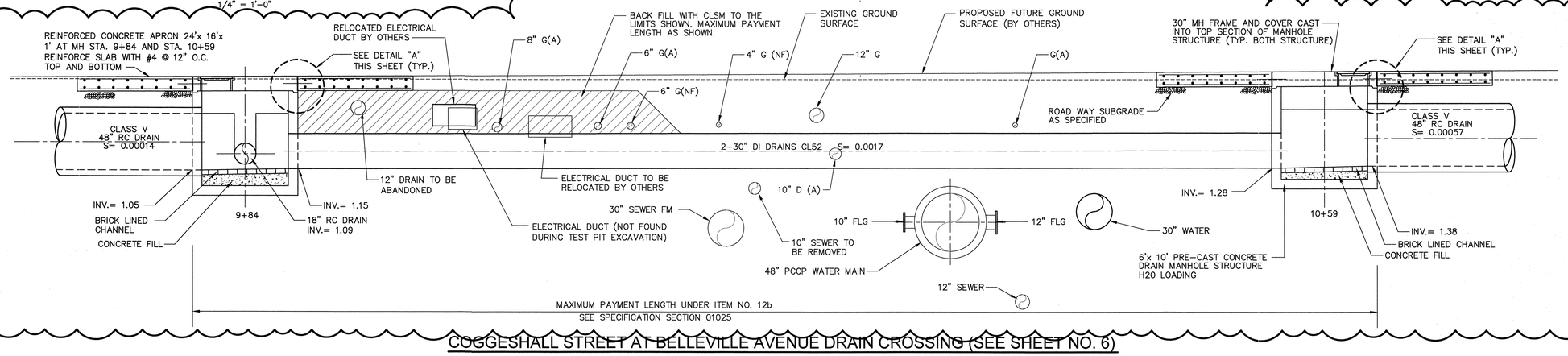

COGGESHALL STREET AT BELLEVILLE AVENUE DRAIN CROSSING (SEE SHEET NO. 6)

1/4" = 1'–0"

NOTES:

1. CONTRACTOR TO COORDINATE FINISHED SLAB ELEVATION WITH PROPOSED FINISHED ROADWAY GRADE.
2. ALL WATER MAIN JOINTS SHALL BE RESTRAINED.
3. REMOVE EXISTING 10" AND 12" WATER MAINS AND INSTALL NEW BLIND FLANGES AS SHOWN. CLEAN EXISTING CONNECTIONS AS REQUIRED TO FACILITATE INSTALLATION.
4. PRIOR TO ORDERING MANHOLE STRUCTURE AT STA. 9+94 AND STA. 10+59, CONTRACTOR SHALL CONDUCT A DETAILED SITE SURVEY AT THE STRUCTURE LOCATION TO FIELD VERIFY EXISTING GRADE. SHOULD THE SITE SURVEY INDICATE THAT THE MANHOLE CAN BE CONSTRUCTED BELOW GRADE, CONTRACTOR SHALL SUBMIT A REVISED DESIGN TO ENGINEER FOR REVIEW AS PART OF THE SHOP DRAWING REVIEW AND REINFORCED CONCRETE SLAB IS NOT NEEDED. SHOULD THE SURVEY INDICATE THAT THE MANHOLE FRAME AND COVER (NOTE: A 4" STYLE FRAME AND COVER IS ACCEPTABLE AT THESE LOCATIONS) WILL BE ABOVE THE EXISTING GRADE, BUT WILL BE ACCEPTABLE FOR FUTURE GRADE, THE STRUCTURE SHALL BE PLATED AND THE COVER INSTALLED UNDER FUTURE WORK BY OTHERS.

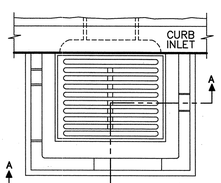

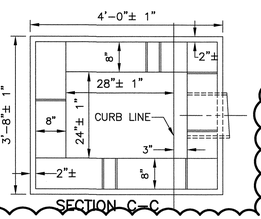

SECTION C–C

NOTES:

1. WHERE CURB INLET IS NOT USED THE INSIDE HORIZONTAL DIMENSIONS OF GUTTER INLET TO BE 24"±1" x 24"±1" WHICH CASE AND UNLESS OTHERWISE DIRECTED A STANDARD 4–FLANGE FRAME IS TO BE USED.
2. BRICKS MAY BE USED BETWEEN TOP COARSE AND FRAME FOR GRADE ADJUSTMENT.
3. FOR DESCRIPTION, MATERIALS AND CONSTRUCTION METHODS, SEE SPECIFICATIONS.
4. BRICK COURSES TO RAISE CATCH BASIN TO FINISHED GRADE. MINIMUM OF 2 COURSES AND NO MORE THAN 4.

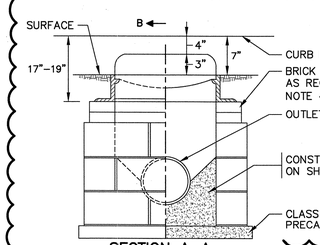

SECTION A–A

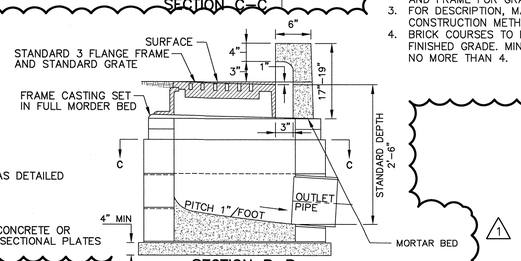

SECTION B–B

CONCRETE BLOCK GUTTER INLET

NTS

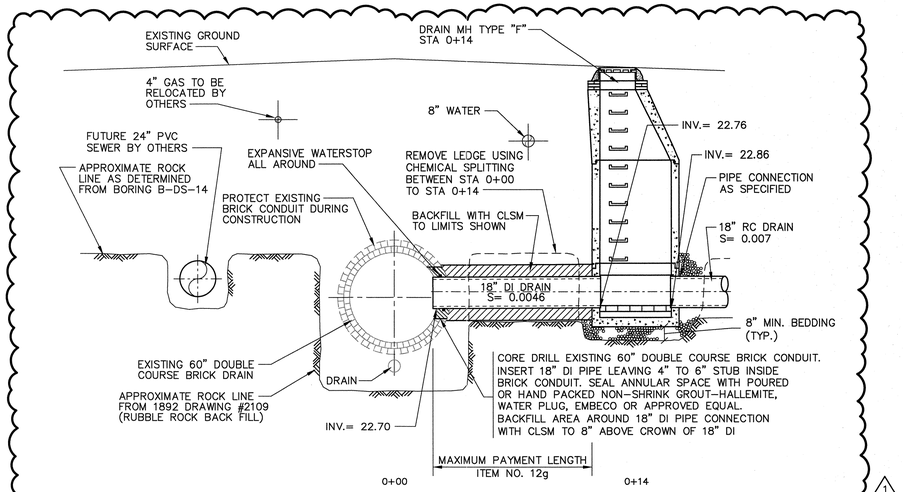

(SEE SHEET NO. 9A, STA 0+00 TO STA 0+14)

18" DRAIN FROM JEAN STREET INTO 60" DRAIN IN SAWYER STREET

1/4" = 1'–0"

REV. NO.	DATE	DRWN	CHKD	REMARKS
1	2/15	AW	SS	REVISED PER ADDENDUM NO. 1

DESIGNED BY: S. SYDE
DRAWN BY: A. WELDON
SHEET CHK'D BY: L. VIERA
CROSS CHK'D BY: J. KEANEY
APPROVED BY: R. NORTON
DATE: FEBRUARY 2015

CDM Smith
260 West Exchange Street, Suite 300
Providence, RI 02903
Tel: (401) 751-5360

CITY OF NEW BEDFORD, MASSACHUSETTS
WASTEWATER SYSTEM IMPROVEMENTS

PHASE I - COGGESHALL STREET SEWER SEPARATION

MISCELLANEOUS DETAILS VII

2/26/15

PROJECT NO. 0309–107278
FILE NAME: C007STDT.DWG
SHEET NO.
C-7
0309–P–4503

XREFs: [CDMS_2436] Images: []
Last saved by: VIERALC Time: 2/25/2015 3:36:59 PM
pw:\\docpwapp1:PW_XM1\0309\107278\04 Design Services NM_Addendum\02 Civil\10 CADD\C007STDT.dwg
© 2015 CDM SMITH ALL RIGHTS RESERVED.
REUSE OF DOCUMENTS: THESE DOCUMENTS AND DESIGNS PROVIDED BY PROFESSIONAL SERVICE, INCORPORATED HEREIN, ARE THE PROPERTY OF CDM SMITH AND ARE NOT TO BE USED, IN WHOLE OR PART, FOR ANY OTHER PROJECT WITHOUT THE WRITTEN AUTHORIZATION OF CDM SMITH.

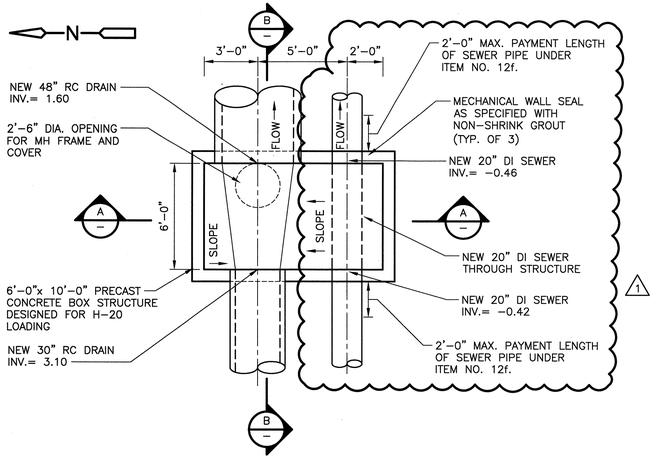

PLAN
1/4" = 1'-0"

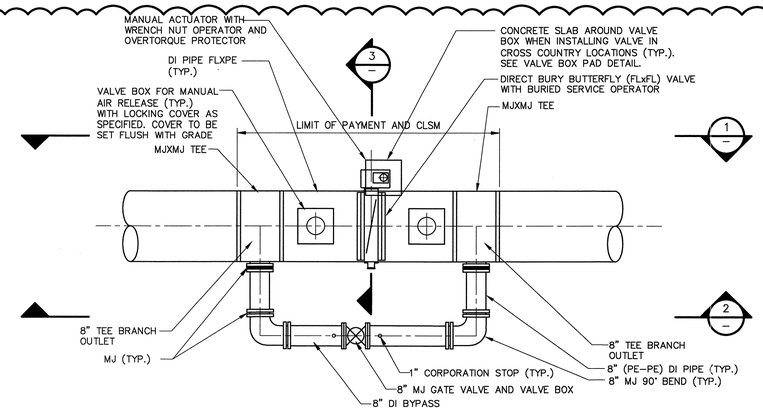

NEW 30" BUTTERFLY VALVE
NTS

BUTTERFLY VALVING NOTES:

1. ALL BUTTERFLY VALVES SHALL PASS THE SPECIFIED ON-SITE PRESSURE TESTING PRIOR TO INSTALLATION.
2. ALL PIPE, FITTING AND VALVE JOINTS SHALL BE RESTRAINED.
3. MANUAL AIR RELEASE VALVES SHALL BE PROVIDED AT EACH BUTTERFLY VALVE INSTALLATION FOR ALL 30" BUTTERFLY VALVES.
4. THIS IS A TYPICAL VALVE REPLACEMENT DETAIL. SEE WORK AREAS FOR SPECIFIC PIPING AND FITTING THAT VARY TO SUIT EACH SPECIFIC LOCATION.
5. CONTRACTOR SHALL EXCAVATE TEST PITS AS REQUIRED TO CONFIRM ALL DIMENSIONS, MEASUREMENTS AND PIPE OUTSIDE DIAMETER PRIOR TO ORDERING AND FABRICATION OF NEW MATERIALS.
6. RESTRAIN ALL JOINTS

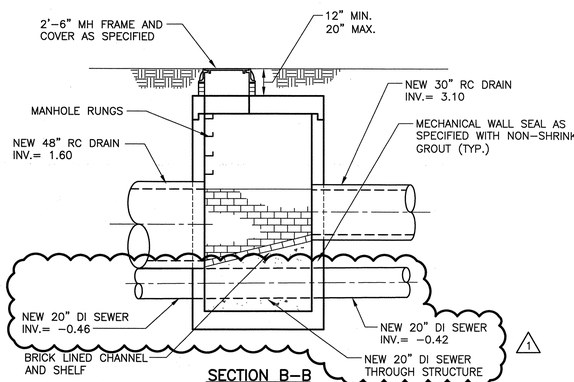

SECTION B-B
1/4" = 1'-0"

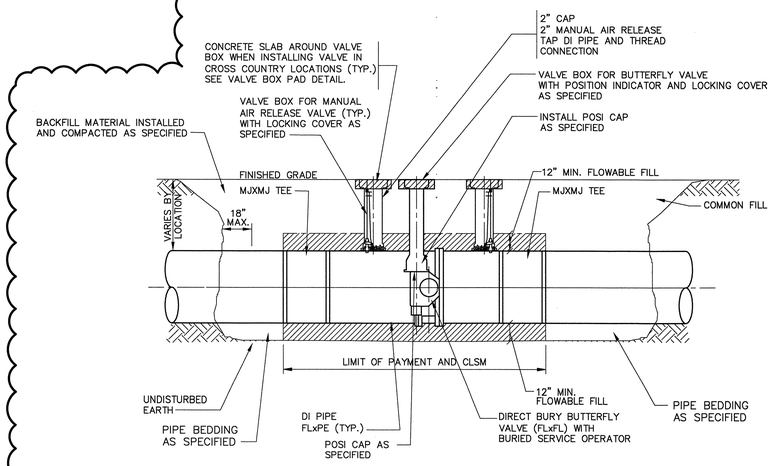

SECTION 1
NTS

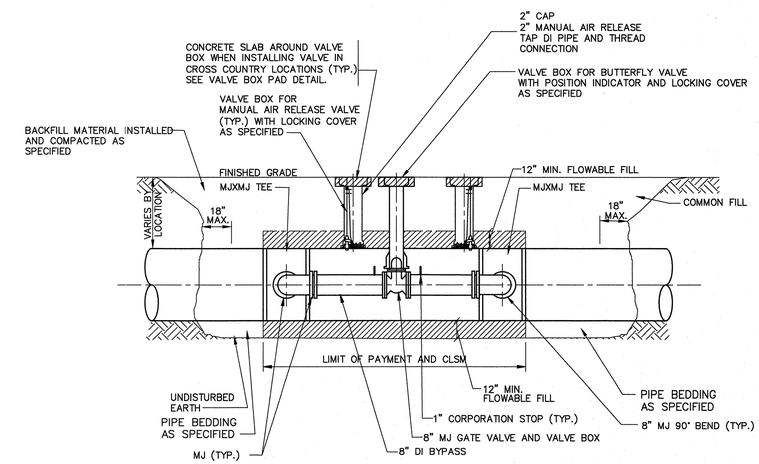

SECTION 2
NTS

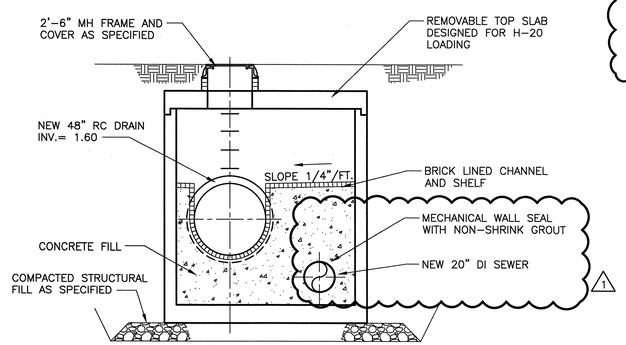

SECTION A-A
1/4" = 1'-0"

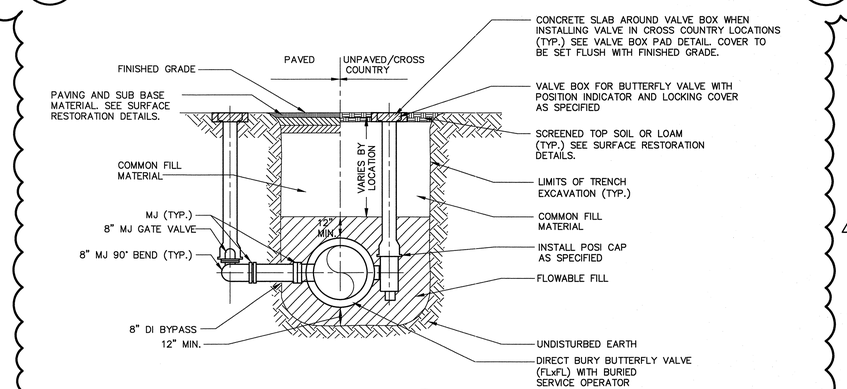

SECTION 3
NTS

1/4" = 1'- 0"
2 1 0 2 4

PRE-CAST STRUCTURE STA 14+55

(SEE SHEET NO. 7)

NOTES:

1. PAYMENT FOR STRUCTURE SHALL BE INCLUDED UNDER ITEM NO. 12f. SEE SPECIFICATION SECTION 01025.

REV. NO.	DATE	DRWN	CHKD	REMARKS
1	2/15	AW	SS	REVISED PER ADDENDUM NO. 1

DESIGNED BY: S. SYDE
DRAWN BY: A. WELDON
SHEET CHK'D BY: L. VIERA
CROSS CHK'D BY: J. KEANEY
APPROVED BY: R. NORTON
DATE: FEBRUARY 2015

CDM Smith
260 West Exchange Street, Suite 300
Providence, RI 02903
Tel: (401) 751-5360

CITY OF NEW BEDFORD, MASSACHUSETTS
WASTEWATER SYSTEM IMPROVEMENTS

PHASE I - COGGESHALL STREET SEWER SEPARATION

MISCELLANEOUS DETAILS IX

PROJECT NO. 0309-107278
FILE NAME: C009STDT.DWG
SHEET NO.
C-9
0309-P-4505

2/26/15

XREFs: [PROPLO01, CDMS_2436] Images: []
Last saved by: WELDONAJ Time: 2/26/2015 9:53:59 AM
pw:\\dacpwapp1:PW_XM1\0309\107278\04 Design Services NM_Addendum\02 Civil\10 CADD\C009STDT.dwg
©2015 CDM SMITH ALL RIGHTS RESERVED.
REUSE OF DOCUMENTS: THESE DOCUMENTS AND DESIGNS PROVIDED BY PROFESSIONAL SERVICE, INCORPORATED HEREIN, ARE THE PROPERTY OF CDM SMITH AND ARE NOT TO BE USED, IN WHOLE OR PART, FOR ANY OTHER PROJECT WITHOUT THE WRITTEN AUTHORIZATION OF CDM SMITH.